MAST244GASXB

24 INCH ALL GAS RANGE, 4 BURNERS



GENERAL CHARACTERISTICS	
Worktop	Squared 4 gas burners with lateral triple ring
Burners and burner caps	Aluminum burners
Pan support	Cast iron
Knobs	Master black with ring
Cooking modes	4
Shelves	2 standard with handle
Levels	Laterals grids
Inner door	Modular 3 glasses
Door hinges	Soft motion
Storage compartment	Fixed stainless steel
Legs	Nichel ø 6 cm tipo a
TECHNICAL SPECIFICATIONS	
Electrical requirements	110 V 60 HZ - 2.50 AA
Absorbed current [A]	2.50 a A
Packaging dimensions	42 1/2 27 9/16 29 1/2

MAST244GASXB

24 INCH 4-BURNERS GAS OVEN

DIMENSIONS

SIDE VIEW

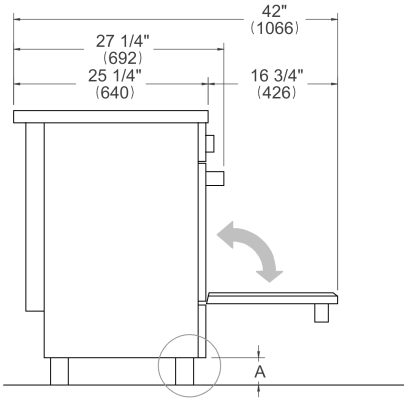

LEG DETAILS

FRONT VIEW

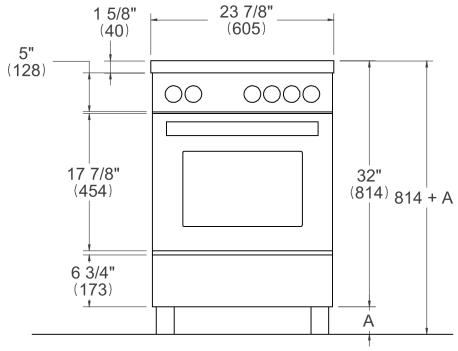

REAR VIEW

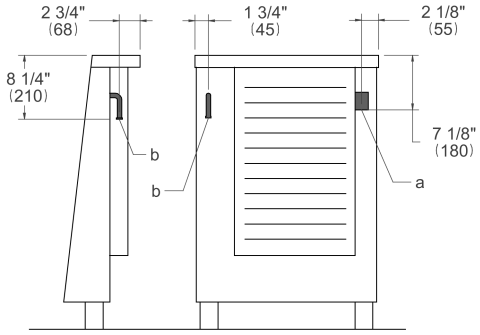

INSTALLATION

E

A properly-grounded horizontally mounted electrical receptacle should be installed no higher than 3” (7.6 cm) above the floor, no less than 2” (5 cm) and no more than 8” (20,3 cm) from the left side (facing product). Check all local code requirements.

G

Install agency approved, properly sized manual shut-off valve at max. height of 3” from floor, 2” min. height/ 8” max. height from the right side (facing product). Use approved shut-off valve & regulator gas connection, properly sized flex or rigid pipe. Check all local code requirements.

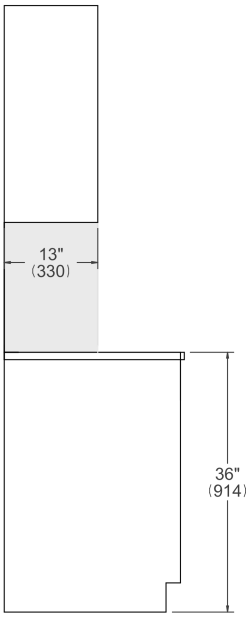

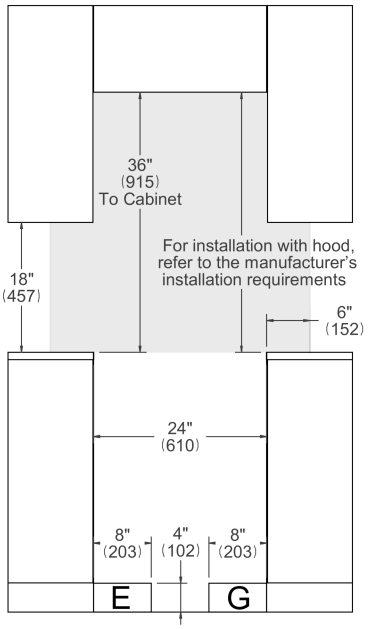

NOTE

a. Electrical Connection

b. Gas Connection

Disclaimer: while every effort has been made to insure the accuracy of the information contained in this document, Fratelli Bertazzoni reserves the right to change any part of the information at any time without notice. For detailed installation specifications consult the installation manual. Fratelli Bertazzoni, Bertazzoni and the winged wheel brand icon are registered trademarks of Bertazzoni Spa.