EN

INSTALLATION MANUAL
USER AND MAINTENANCE MANUAL
FREESTANDING ELECTRIC RANGES, CERAMIC WORKTOP,
ELECTRIC MANUAL CLEAN OVEN MODEL

FROM THE DESK OF OUR PRESIDENT

Dear new owner of a Bertazzoni appliance,

I want to thank you for choosing one of our beautiful products for your home.

My family started manufacturing kitchen appliances in Italy in 1882, building a reputation for quality of engineering and passion for good food.

Today, our products stand out because of their unique blend of authentic Italian design and superior appliance technology. It is our mission to make products that function perfectly and bring joy to their owners.

By making beautiful products we respond to our customers' flair for good design. By making them versatile and easy-to-use, cooking with Bertazzoni becomes a real pleasure.

This manual will help you learn to use and care for your Bertazzoni appliance in the safest and most effective way, so that it can give you the highest satisfaction for years to come.

Enjoy!

Paolo Bertazzoni

President

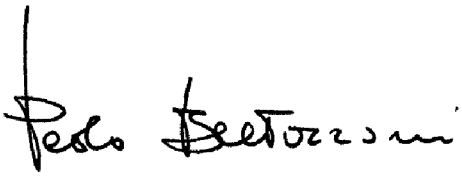

USER MANUAL VALIDITY

The following manual is valid for all the product codes mentioned below:

- MAST244FEMXB
- PRO244EFEMXB

CONTENTS

INSTALLATION MANUAL 9
- WARNINGS 9
  - DATA RATING LABEL 10
- BEFORE INSTALLATION 11
  - ROOM VENTILATION 11
- VENTILATION PREPARATION 12
  - SELECT HOOD AND BLOWER MODELS 12
  - HOOD PLACEMENT 12
  - CONSIDER MAKE-UP AIR 12
- SPECIFICATIONS 13
- CLEARANCE DIMENSIONS 14
  - INSTALLATION ADJACENT TO KITCHEN CABINETS 14
  - CABINET 14
  - METAL HOOD 14
  - INSTALLATION REQUIREMENTS 15
- ELECTRICAL CONNECTION 16
  - ELECTRICAL GROUNDING 16
  - FOUR WIRES CONNECTION 17
- WIRING DIAGRAM 18
- INSTALLATION 19
  - APPLIANCE INSTALLATION 19
  - REMOVING THE OVEN DOOR 19
  - INSTALLING THE LEGS 20
- INSTALLING THE ANTI/TIP DEVICES 21
  - ANTI-TIP BRACKETS 21
  - ANTI/TILT CHAIN 21
- INSTALLATION CHECKLIST 23
- FINAL PREPARATION 24
- BERTAZZONI SERVICE 25

USER AND MAINTENANCE MANUAL 26
- WARNINGS 26
  - IN MASSACHUSETTS: 26
  - TO PREVENT FIRE OR SMOKE DAMAGE 26
  - IN CASE OF FIRE 26
  - CHILD SAFETY 26
  - COOKING SAFETY 27
  - RECOMMENDED UTENSILS 27
  - CERAMIC COOKING SURFACES 28
  - OVEN HEATING ELEMENTS 28
  - CLEANING SAFETY 28
  - POWER FAILURE WARNING 28
  - ELECTRICAL SHOCK HAZARD 28
  - BURN HAZARD 28
  - WARNING-TIPPING HAZARD 29
- WORKTOP AND KNOBS LAYOUT 30
- COOKTOP 31
  - USING THE CERAMIC HOB 31
  - TYPE OF PAN 33
  - RECOMMENDATIONS 33
- ELECTRIC CONVECTION OVEN 34
  - SHELVES POSITIONS 34
  - COOLING FAN 34
  - PREHEATING THE OVEN 34
  - USING THE OVEN 34
  - OVEN COOKING MODES 35
  - SPECIAL FUNCTIONS 36
  - CONDENSATION 36
  - GETTING THE BEST RESULTS 36
  - OVEN COOKING RECOMMENDATIONS 37

CONTENTS

BROILING RECOMMENDATION 38
TROUBLESHOOTING COMMON PROBLEMS WITH OVEN COOKING 39
TELESCOPIC GLIDES 40
KEEPING YOUR BERTAZZONI CLEAN 42
BURN HAZARD 42
THINGS TO AVOID 42
CLEANING STAINLESS STEEL 42
CLEANING PAINTED SURFACES 42
CLEANING GLASS SURFACES 42
CLEANING THE BROILER PAN 42
CLEANING THE CERAMIC COOKTOP 42
CLEANING THE OVEN CAVITY 42
CLEANING OVEN RACKS AND SUPPORTS 42
SIMPLE MAINTENANCE 43
REPLACING OVEN LIGHTS 43
TROUBLESHOOTING 44
THE OVEN WILL NOT OPERATE 44
THE CONTROL KNOBS ARE GETTING TOO HOT 44
A CONTROL KNOB IS LOOSE ON ITS SHAFT 44
FOOD IS COOKING TOO QUICKLY 44
FOOD IS NOT COOKING EVENLY 44
GRILLING IN THE OVEN IS SLOW 44
CONDENSATION FORMS IN THE OVEN 44
SMOKE IS GENERATED IN THE OVEN 44
CUSTOMER CARE 45

WARNINGS

To ensure proper and safe operation, the appliance must be properly installed and grounded by a qualified technician. DO NOT attempt to adjust, repair, service, or replace any part of your appliance unless it is specifically recommended in this manual. All other servicing should be referred to a qualified servicer.

FOR THE INSTALLER: Before installing the Bertazzoni appliance, please read these instructions carefully. This appliance shall be installed in accordance with the manufacturer's installation instructions.

IMPORTANT

Leave these instructions with the owner, who should save them for local inspector's use and for future reference. DO NOT remove permanently affixed labels, warnings, or plates from product. This may void the warranty.

Installation must conform with all local codes.

This range is NOT designed for installation in manufactured (mobile) homes or recreational park trailers.

DO NOT install this range outdoors.

This appliance must be properly grounded. Grounding reduces the risk of electric shock by providing a safe pathway for electric current in the event of a short circuit.

WARNING

To avoid risk of property damage, personal injury or death; follow information in this manual exactly to prevent a fire or explosion.

NOTE

Installation and service must be performed by a qualified installer, service agency or the gas supplier.

DANGER

ELECTRIC SHOCK HAZARD!!!

To avoid risk of electrical shock, personal injury or death, verify that the appliance has been properly grounded in accordance with local codes or in absence of codes, with the National Electrical Code (NEC). ANSI/ NFPA 70 - latest edition.

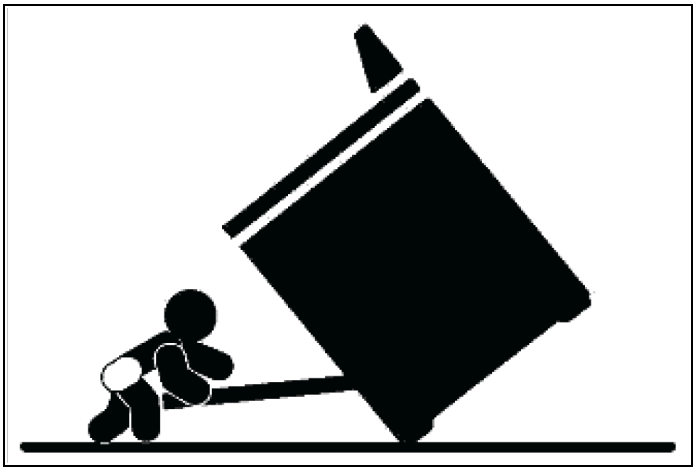

Fig. 1

WARNING

Warning-tipping hazard

A child or adult can tip over the range and be killed.

Install the anti-tip device to the structure and/or the range. Verify the anti-tip device has been properly installed and engaged.

Engage the range to the anti-tip device by anti-tip brackets or anti-tip chain (see installing the anti- tip device chapter). Ensure the anti-tip device is re-engaged when the range is moved.

Re-engage the anti-tip device if the range is moved. Do not operate the range without the anti-tip device in place and engaged.

See anti-tip device installation instructions for details.

Failure to do so can result in death or serious burns to children or adults.

DO NOT lift the range by the oven door's handle, as this may damage the door hinges and cause the door to fit incorrectly.

DO NOT lift the appliance by the range's control panel.

The unit is heavy and should be handled accordingly. Proper safety equipment such as gloves and adequate manpower of at least two people must be used in moving the range to avoid injury and to avoid damage to the unit or the floor. Rings, watches, and any other loose items that may damage the unit or otherwise might become entangled with the unit should be removed.

Hidden surfaces may have sharp edges. Use caution when reaching behind or under appliance.

DO NOT use a hand truck or appliance dolly on the back or front of the unit. Handle from the side only.

WARNINGS



WARNING

Cancer and Reproductive Harm — www.P65Warnings.ca.gov.

DATA RATING LABEL

The data rating label shows the model and serial number of the range. It is located under the control panel and in the last page of this manual.

BEFORE INSTALLATION

- This appliance shall only be installed by an authorized professional.
- This appliance shall be installed in accordance with the manufacturer's installation instructions.
- This appliance must be installed in accordance with the norms & standards of the country where it will be installed.
- The appliance, when installed, must be electrically grounded in accordance with local codes or, in the absence of local codes, with the National Electrical Code, ANSI/NFPA 70.

All opening and holes in the wall and floor, back and under the appliance shall be sealed before installation of the appliance.

ROOM VENTILATION

An exhaust fan may be used with the appliance; in each case it shall be installed in conformity with the appropriate national and local standards. Exhaust hood operation may affect other vented appliances; in each case it shall be installed in conformity with the appropriate national and local standards.



WARNING

This appliance should not be installed with a ventilation system that directs air in a downward direction toward the range. This type of ventilation system may cause ignition and combustion problems with the appliance resulting in personal injury, property damage, or unintended operation. Ventilating systems that direct the air upwards do not have any restriction.

Do not use aerosol sprays in the vicinity of this appliance while it is in operation.

VENTILATION PREPARATION

This range will best perform when installed with Bertazzoni exhaust hoods. These hoods have been designed to work in conjunction with the Bertazzoni range and have the same finish for a perfect look.

Before installation of the exhaust hood, consult local or regional building and installation codes for additional specific clearance requirements. Refer to the range hood installation instructions provided by the manufacturer for additional information.

SELECT HOOD AND BLOWER MODELS

- For wall installations, the hood should be equal or larger width than the range. Where space permits, a hood larger than the range may be desirable for improved ventilation performance.
- For island installations, the hood width should overhang the range by a minimum of 3″ (76 mm) on each side.

HOOD PLACEMENT

- For best removal of smoke and odors, the lower edge of the hood should be installed between 25 1/2″ (65 cm) and 31 1/2″ (80 cm) above the range cooking surface.
- If the hood contains any combustible materials (i. e. a wood covering), it must be installed at a minimum of 36″ (914 mm) above the cooking surface.

CONSIDER MAKE-UP AIR

Due to the high volume of ventilation air, a source of outside replacement air is recommended. This is particularly important for tightly sealed and insulated homes. A qualified heating and ventilating contractor should be consulted.

SPECIFICATIONS

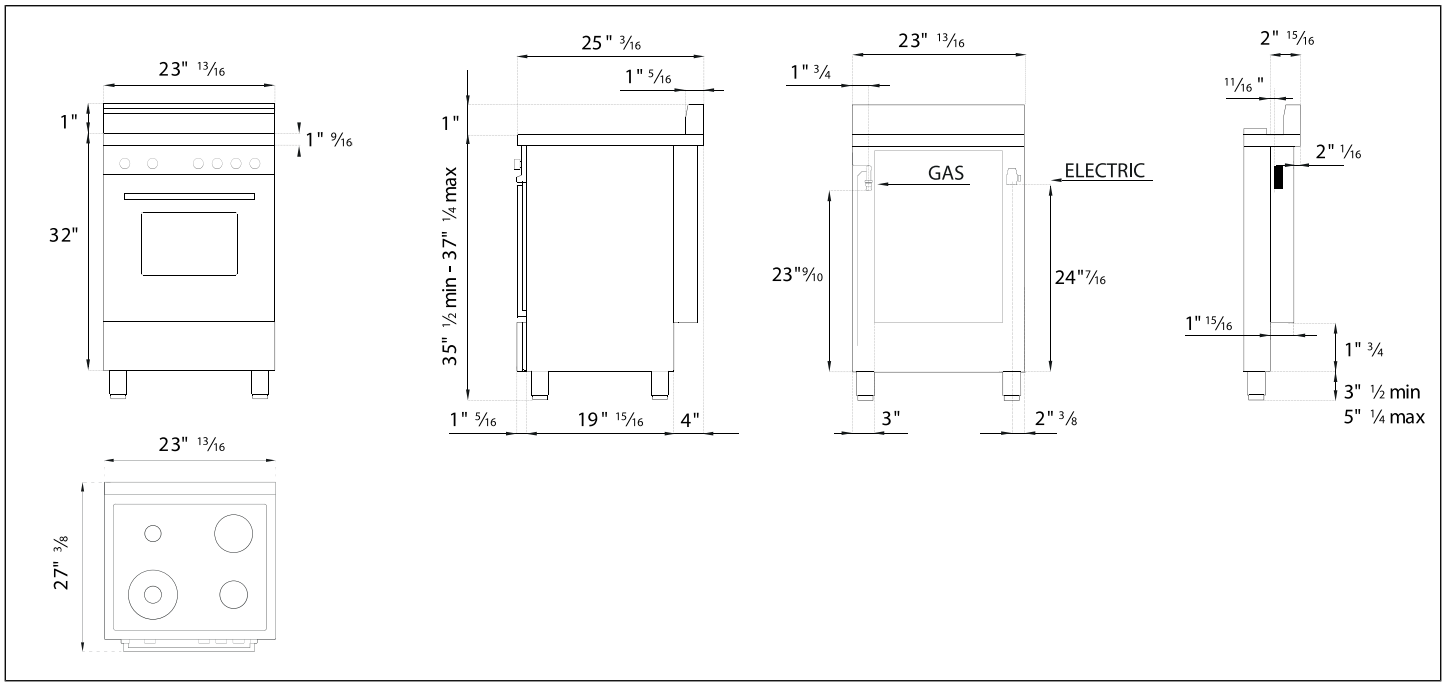

Fig. 2

CLEARANCE DIMENSIONS

INSTALLATION ADJACENT TO KITCHEN CABINETS

This range may be installed directly adjacent to existing countertop high cabinets (36″ or 91.5 cm from the floor).

For the best look, the worktop should be level with the cabinet countertop. This can be accomplished by raising the unit using the adjustment spindles on the legs.

CAUTION

The range CANNOT be installed directly adjacent to kitchen walls, tall cabinets, tall appliances, or other vertical surfaces above 36″ (91.4 cm) high. The minimum side clearance in such cases is 6″ (15.2 cm).

Wall cabinets with minimum side clearance must be installed 18″ (45.7 cm) above the countertop with countertop height between 35 ½″ (90.2 cm) and 37 ¼″ (94.6 cm). The maximum depth of wall cabinets above the range shall be 13″ (33.0 cm).

CABINET

A	24″(60.40 cm)
B	36″ (91.5 cm) hood with combustible materials
C	13″ (33.0 cm)
D	18″ (45.7 cm)
E	35″ 1/2 (90.2 cm) / 37″ ¼ (94.6 cm)
F	6″ (15.2 cm)

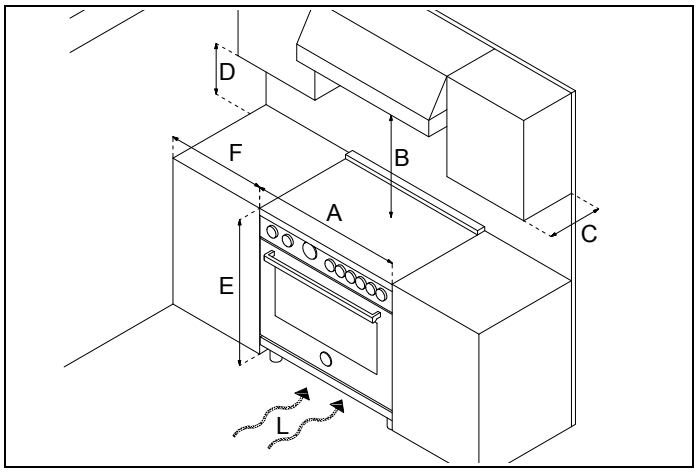

Fig. 3

If installing toekick, verify that the sum of the cut out areas equal the recommended ventilation (L)

24″ area 29 sq. inches (18765 mm^2).

METAL HOOD

A	24″(60.40 cm)
B	25 1/2″(65 cm) and 31 1/2″ (80 cm)
C	13″ (33.0 cm)
D	18″ (45.7 cm)
E	35″ 1/2 (90.2 cm) / 37″ 1/4 (94.6 cm)
F	6″ (15.2 cm)
G	12″(30.50 cm)
H	1″ 9/16 (4 cm)

When installed in combination with a hood manufactured in a metal material or metal surface finish, refer to the hood manufacturer's requirements for installation. In the event the hood manufacturer does not make any specific indication as to installation distances, consider the distance B.

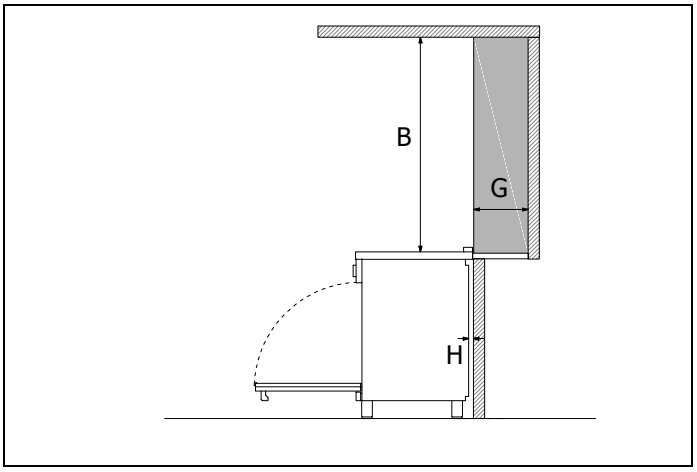

Fig. 4

Shaded area behind range indicates minimum clearance to combustible surfaces, combustible materials cannot be located within this area. 12″ (305 mm) min. to combustible surface with Flush Island Trim.

For Flush Island installations, counter surface should have a cantilever edge meeting the back section of the Flush Island Trim accessory. As defined in the "National Fuel Gas Code" (ANSI Z223.1, Current Edition).

CLEARANCE DIMENSIONS

INSTALLATION REQUIREMENTS

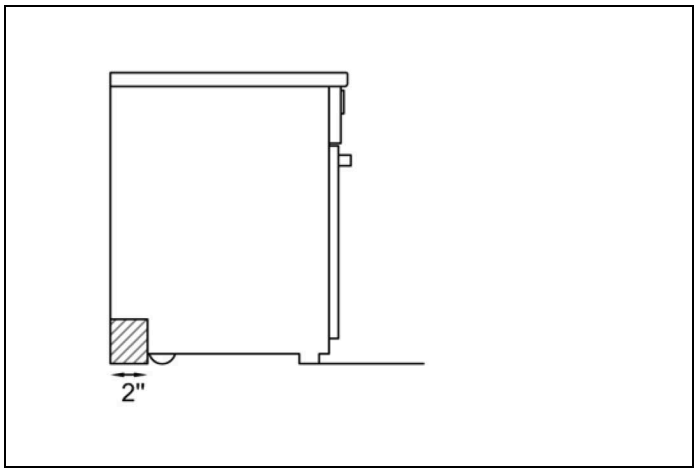

Fig. 5

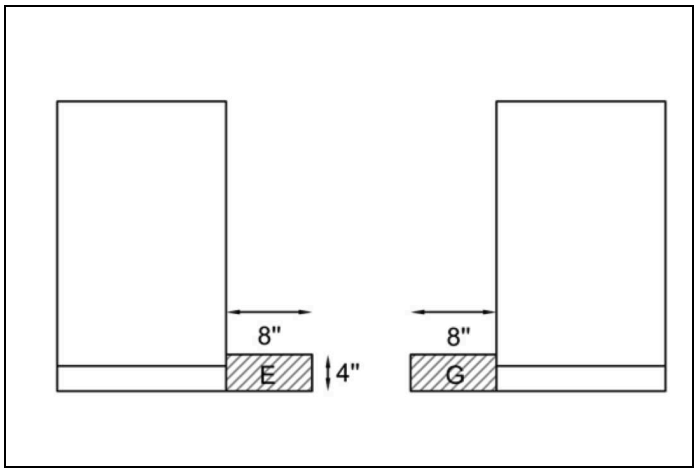

Fig. 6

installation area for the connection

ELECTRICAL

A properly-grounded horizontally- mounted electrical receptacle should be installed no higher than 3″ (7.6 cm) above the floor, no less than 2″ (5 cm) and no more than 8″ (20.3 cm) from the left side (facing product).

Check all local code requirements.

WARNING

ELECTRICAL SHOCK HAZARD

Disconnect electrical power at the circuit breaker box or fuse box before installing the appliance.

Provide appropriate ground for the appliance. Use copper conductors only. Failure to follow these instructions could result in serious injury or death.

ELECTRICAL GROUNDING

This appliance is equipped with a three-prong plug for your protection against shock hazard and should be plugged directly into a properly grounded socket. Do not cut or remove the grounding prong from this plug.

CAUTION

Label all wires prior to disconnecting when servicing controls. Wiring errors can cause improper and dangerous operation. Verify proper operation after servicing.

The appliance shall be connected to a single phase electric line rated at 120/208 VAC or 120/240 VAC and 60 Hz frequency.

TYPE	VOLTAGE	CIRCUIT RATING	ELECTRICAL SUPPLY
24″ CER-DFM	120/208V	7500W 36,1A	40A
	120/240V	10000W 41,7A	40A

Install a suitable electric power supply receptacle connection type NEMA 14-50R able to support a load of at least 30 A (per line) according to local code requirements. For four or three wires power supply connection system see diagram below.

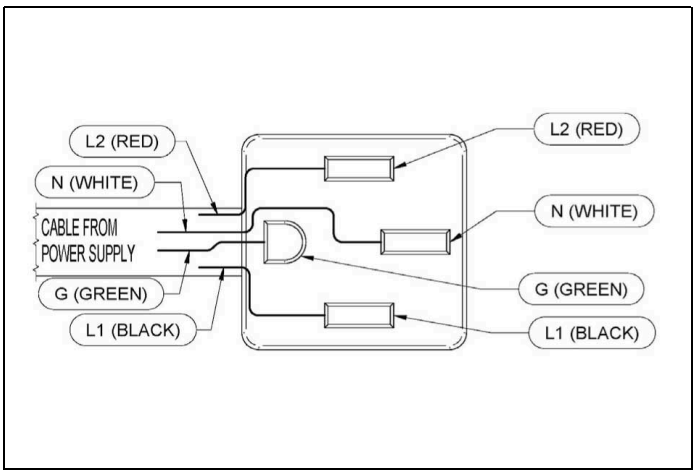

Fig. 7 FOUR-WIRE CONN.RECEPTACLE NEMA 14-50R

Check your local code for which of the options below should be used in grounding the receptacle power supply connections.

ELECTRICAL CONNECTION

FOUR WIRES CONNECTION

- Connect the L1 receptacle terminal to the incoming BLACK electrical supply wire (L1-hot wire)
- Connect the L2 receptacle terminal to the incoming RED electrical supply wire (L2-hot wire)
- Connect the NEUTRAL receptacle terminal to the incoming NEUTRAL (WHITE) electrical supply wire
- Connect the GROUND receptacle terminal to the incoming GROUND (GREEN) electrical supply wire.

DO NOT USE EXTENSION CORDS WITH THIS APPLIANCE AS IT MAY RESULT IN FIRE, ELECTRIC SHOCK OR OTHER type of PERSONAL INJURY.

The appliance is equipped at the factory with an electric supply cord set 4 wires type with ring terminals (L1, L2, N, Ground) suitable for range use UL/CSA listed type SRDT/DRT 2x6AWG (L1, L2)+2x8AWG (N, G) rated 300V, 40 or 50A with fused plug type NEMA 14-50P; cable length 1.5 m.; in case the supply cord set must be replaced, it shall be replaced with an identical set having the same technical specs and following carefully the instructions and diagrams below:

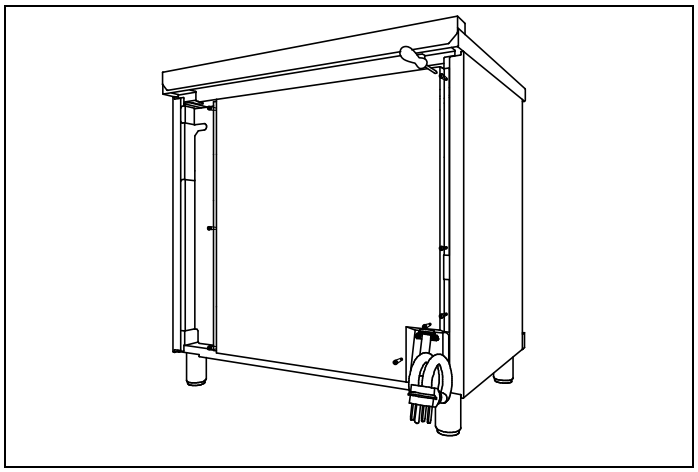

Fig. 8

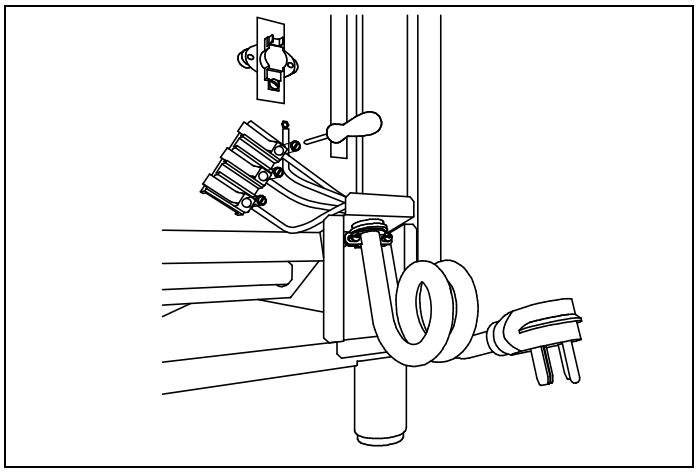

Fig. 9

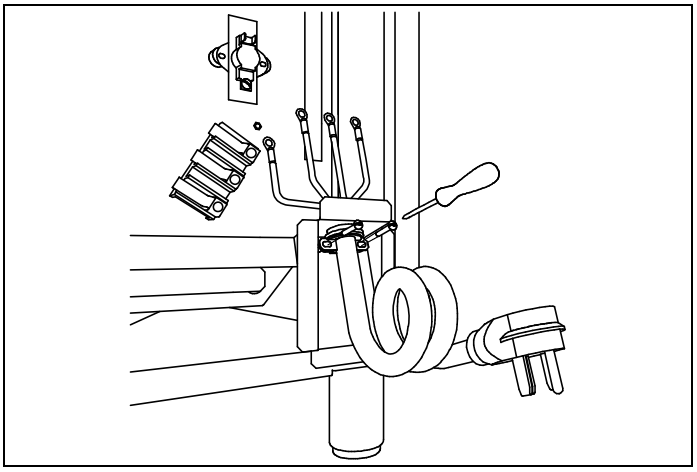

Fig. 10

WIRING DIAGRAM

The electric wiring diagrams and schematics are attached behind the range, and should not be removed except by a service technician, then replaced after service.

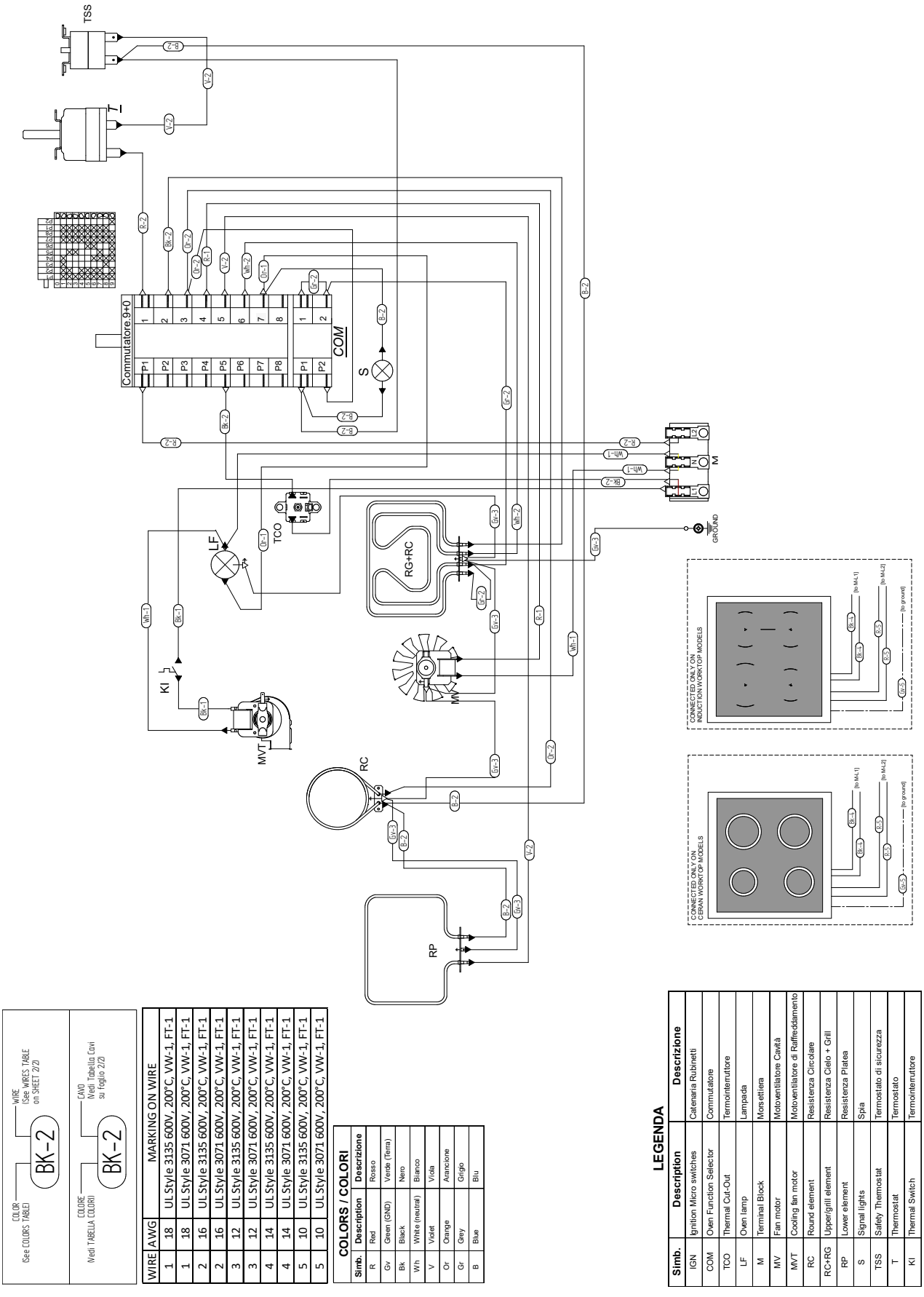

WIRE	AWG	MARKING ON WIRE
1	18	UL Style 3135 600V, 200°C, VW-1, FT-1
1	18	UL Style 3071 600V, 200°C, VW-1, FT-1
2	16	UL Style 3135 600V, 200°C, VW-1, FT-1
2	16	UL Style 3071 600V, 200°C, VW-1, FT-1
3	12	UL Style 3135 600V, 200°C, VW-1, FT-1
3	12	UL Style 3071 600V, 200°C, VW-1, FT-1
4	14	UL Style 3135 600V, 200°C, VW-1, FT-1
4	14	UL Style 3071 600V, 200°C, VW-1, FT-1
5	10	UL Style 3135 600V, 200°C, VW-1, FT-1
5	10	UL Style 3071 600V, 200°C, VW-1, FT-1

COLORS / COLORI

Simb.	Description	Descrizione
R	Red	Rosso
Gv	Green (GND)	Verde (Terra)
Bk	Black	Nero
Wh	White (neutral)	Bianco
V	Violet	Viola
Or	Orange	Arancione
Gr	Grey	Grigio
B	Blue	Blu

LEGENDA

Simb.	Description	Descrizione
IGN	Ignition Micro switches	Catenaria Rubinetti
COM	Oven Function Selector	Commutatore
TCO	Thermal Cut-Out	Termointerruttore
LF	Oven lamp	Lampada
M	Terminal Block	Morsettiera
MV	Fan motor	Motoventilatore Cavità
MVT	Cooling fan motor	Motoventilatore di Raffreddamento
RC	Round element	Resistenza Circolare
RC+RG	Upper/grill element	Resistenza Cielo + Grill
RP	Lower element	Resistenza Platea
S	Signal lights	Spia
TSS	Safety Thermostat	Termostato di sicurezza
T	Thermostat	Termostato
KI	Thermal Switch	Termointerruttore

Fig. 11

APPLIANCE INSTALLATION

UNPACKING THE RANGE

- Remove all packing materials from the shipping pallet but leave the adhesive-backed foam layer over brushed-metal surfaces to protect it from scratches until the range is installed in its final position. Only the film on the side panels should be removed before inserting the range between the cabinets.
- Examine the appliance after unpacking it. In the event of transport damage, do not plug it. Take pictures of the damage and report it immediately to the freight forwarder.
- Remove the oven door(s). This will reduce the weight of the range.
- The grates, griddle plate, burner caps, and oven racks should be removed to facilitate handling.
- Before moving the range, protect the floor to prevent damage.

REMOVING THE OVEN DOOR

Prepare the door for removal. Flip up the locking clamps on each door hinge. Slowly shut the door until the protruding clamps stop the movement.

Pull oven door upwards and remove.

Do not lift or carry the oven door by its handle!

This may damage the hinges.

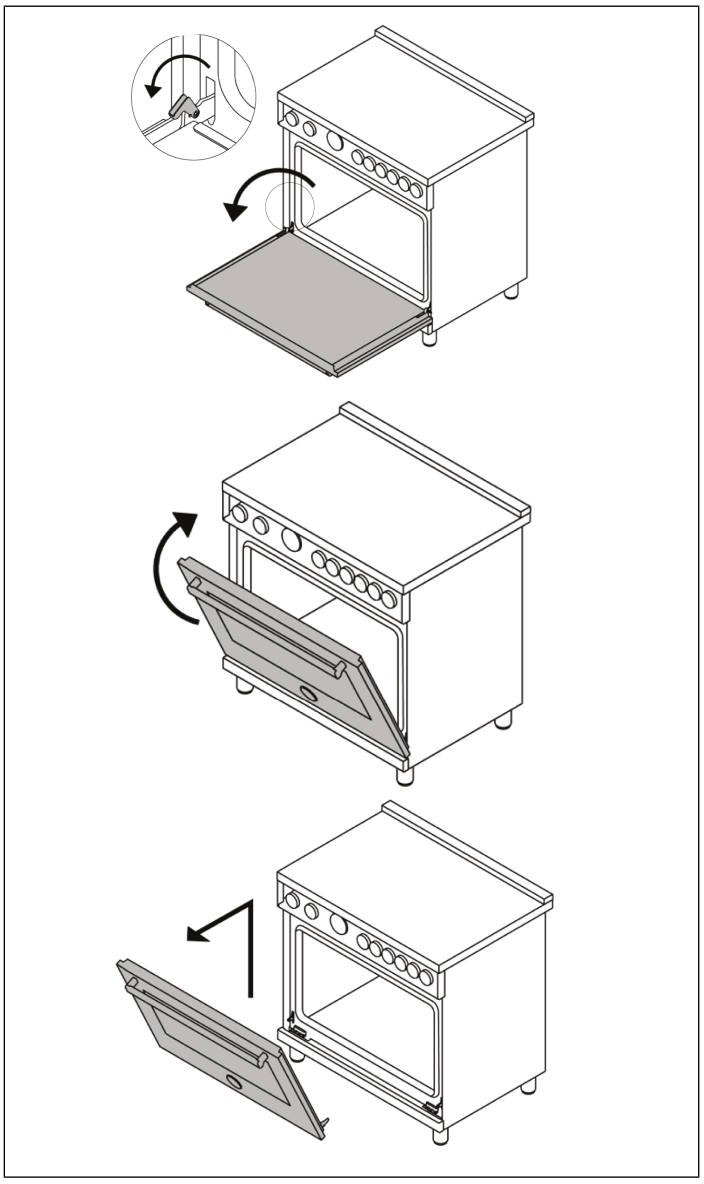

Fig. 12

INSTALLING THE LEGS

Bertazzoni ranges must be used only with the legs properly installed.

Four height-adjustable legs are supplied with the range in the polystyrene container situated over the appliance.

Before installing the legs, position the appliance near its final location as the legs are not suitable for moving the appliance over long distances. After unpacking the range, raise it enough to insert the legs in the appropriate receptacles situated on the lower part of the appliance. Lower the range gently to keep any undue strain from legs and mounting hardware. If possible use a pallet or lift jack instead of tilting the unit.

Adjust leg height to the desired level by twisting the inside portion of the leg assembly until the proper height is reached. Check with a level that the cooktop is perfectly level.

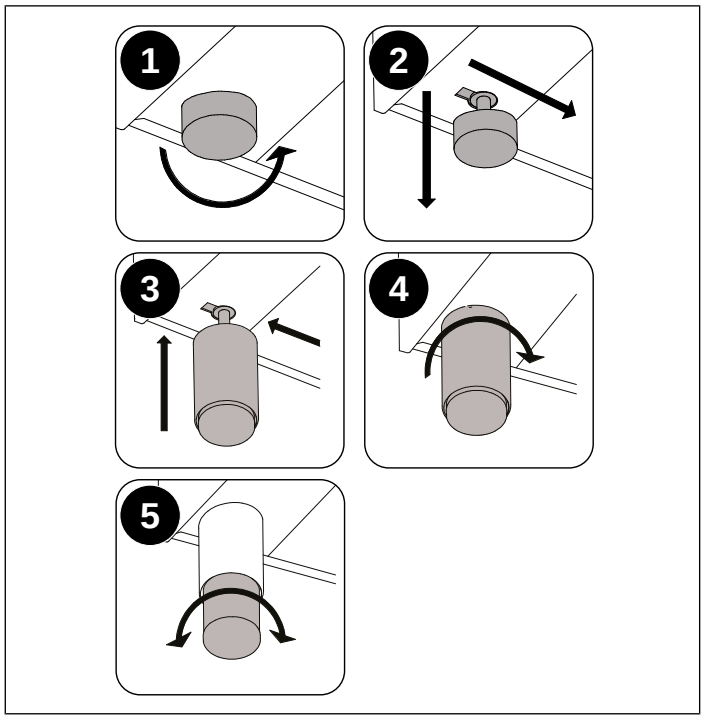

Fig. 13

INSTALLING THE ANTI/TIP DEVICES

ANTI-TIP BRACKETS

The anti-tip bracket shipped with the range must be properly secured to the rear wall as shown in the picture below.

The height of the bracket from the floor must be determined after the range legs have been adjusted to the desired height and after the range has been levelled.

- Measure the distance from the floor to the bottom of the anti-tip bracket receptacle on the back of the appliance.
- Position the anti-tip brackets on the wall at the desired height plus 1/8″ (0.32 cm). The brackets must be placed at 2″5/16 (6.0 cm) from the side of the range.
- Secure the brackets to the wall with appropriate hardware.
- Slide the range against the wall until the brackets are fully inserted into their receptacles on the back of the range.

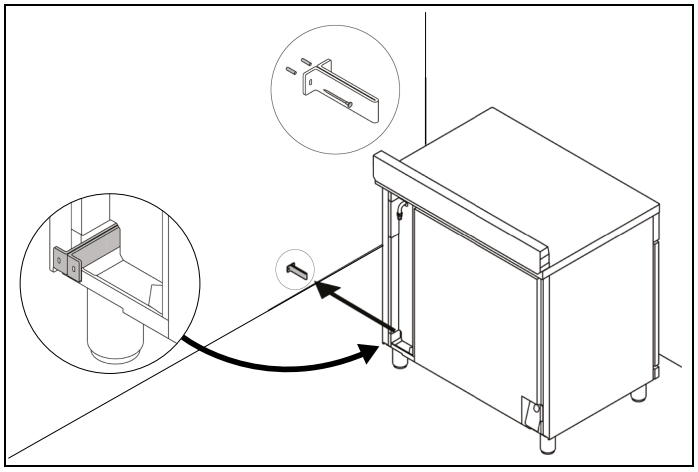

Fig. 14

ANTI/TILT CHAIN

The anti-tilt chain shall be installed on right or left side alternatively according below instructions. The chain shall be hand pulled and fixed to open hook through closed ring.

Disengage the chain prior to moving the appliance for service.

CAUTION

Once servicing operation have been completed the anti-tilt devices (brackets and chain) shall be re-engaged according above instruction/installations.

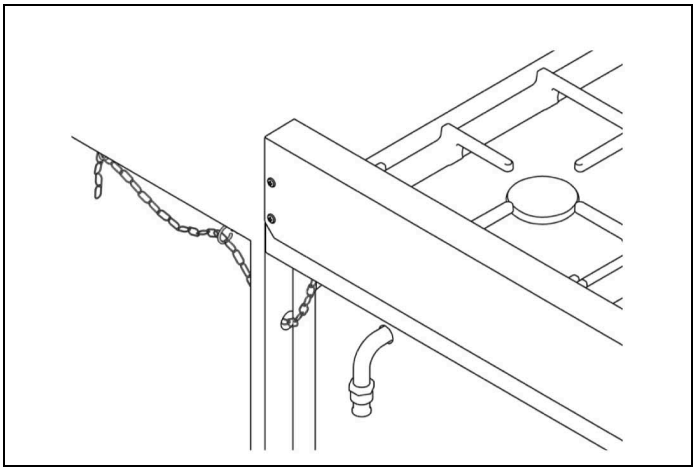

Fig. 15

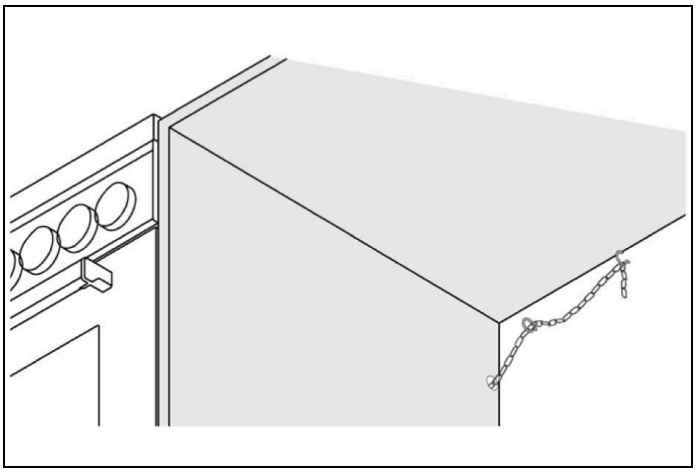

Fig. 16

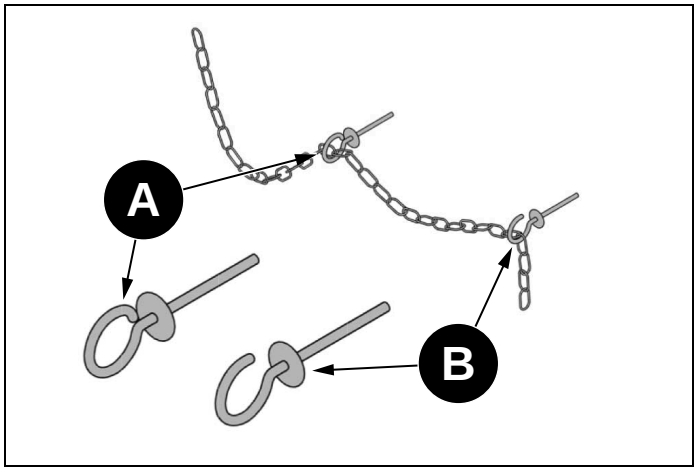

Fig. 17

- **A** CLOSED RING
- **B** OPEN HOOK

INSTALLATION CHECKLIST

A qualified installer should carry out the following checks:

- ☐ Range mounted on its legs
- ☐ Island trim or Backguard attached according to instruction
- ☐ Anti-tip device properly installed
- ☐ Clearance to cabinet surfaces as manufacturer’s guideline

FINAL PREPARATION

- Before using the appliance, remove any protective wrap from the stainless steel.
- All stainless steel body parts should be wiped with hot, soapy water and with a liquid stainless steel cleanser.
- If buildup occurs, do not use steel wool, abrasive cloths, cleaners, or powders!
- If it is necessary to scrape stainless steel to remove encrusted materials, soak with hot, wet cloths to loosen the material, then use a wood or nylon scraper.
- Do not use a metal knife, spatula, or any other metal tool to scrape stainless steel! Scratches are almost impossible to remove.
- Before using the oven for food preparation, wash the cavity thoroughly with a warm soap and water solution to remove film residues and any dust or debris from installation, then rinse and wiped dry.



CAUTION

When using the oven for the first time it should be operated for 15-30 minutes at a temperature of about 500℉/260℃ (main oven) or 440℉/227℃ (auxiliary oven) without cooking anything inside in order to eliminate any moisture and odors from the internal insulation.

BERTAZZONI SERVICE

Bertazzoni is committed to providing the best customer and product service. We have a dedicated team of trained professionals to answer your needs.

If you own a Bertazzoni appliance and need service in the US or Canada please use the following contact information:

If located in the USA:
866 905 0010
https://us.bertazzoni.com/more/support

If located in CANADA:
800 561 7265
https://ca.bertazzoni.com/more/support

Make sure to keep the following information on hand. Our customer service team will require it to open a service ticket or troubleshoot.

- Purchase Date
- Model*
- Serial Number /Production Date*
- *Can be found on data plate

WARNINGS

Warning and Important Safety Instructions appearing in this manual are not meant to cover all possible conditions and situations that may occur. Common sense, caution, and care must be exercised when installing, maintaining, or operating the appliance.

Read and follow all instructions before using this appliance to prevent the potential risk of fire, electric shock, personal injury or damage to the appliance as a result of improper usage of the appliance. Use appliance only for its intended purpose as described in this manual.

Save this Manual for local electrical inspector's use. Read and save these instructions for future reference. Observe all governing codes, ordinances and regulations.



WARNING

To avoid risk of property damage, personal injury or death; follow information in this manual exactly to prevent a fire or explosion. DO NOT store or use gasoline or other flammable vapors and liquids near by this or any appliance.



NOTE

Installation and service must be performed by a qualified installer, service agency or the gas supplier.

IN MASSACHUSETTS:

All gas products must be installed by a "Massachusetts" licensed plumber or gas fitter. A "T" handle type manual gas valve must be installed in the gas line connected to this appliance.

To ensure proper and safe operation: Appliance must be properly installed and grounded by a qualified technician. DO NOT attempt to adjust, repair, service, or replace any part of your appliance unless it is specifically recommended in this manual. All other servicing should be referred to a qualified servicer. Have the installer show you the location of the gas shut-off valve and how to shut it off in an emergency.

A certified technician is required for any adjustments or conversions to Natural or LP gas.

TO PREVENT FIRE OR SMOKE DAMAGE

- Be sure all packing materials are removed from the appliance before operating it.
- Never let clothing, potholders, or other flammable materials come in contact with or too close to any element, top burner or burner grate until it has cooled.
- If appliance is installed near a window, proper precautions should be taken to prevent curtains from blowing over burners.
- Never leave any items on the cooktop. The hot air from the vent may ignite flammable items and may increase pressure in closed containers which may cause them to burst.
- Many aerosol-type spray cans are EXPLOSIVE when exposed to heat and may be highly flammable. Avoid their use or storage near an appliance.

IN CASE OF FIRE

Turn off appliance and ventilation hood to avoid spreading the flame. Extinguish flame then turn on hood to remove smoke and odor.

- Cooktop: Smother fire or flame in a pan with a lid or cookie sheet.
- NEVER pick up or move a flaming pan.
- Oven: Smother fire or flame by closing the oven door. DO NOT use water on grease fires. Use baking soda, a dry chemical or foamtype extinguisher to smother fire or flame, if available, a multipurpose dry chemical or foam type extinguisher.

CHILD SAFETY

- NEVER leave children alone or unsupervised near the appliance when it is in use or is still hot.
- NEVER allow children to sit or stand on any part of the appliance as they could be injured or burned.
-



CAUTION

Do not store items of interest to children in cabinets above the range or on the backguard of the range. Children climbing on the range to reach those items could be seriously injured.

WARNINGS

COOKING SAFETY

- Ensure that the kitchen is well-ventilated. Keep natural venting holes open or install a mechanical ventilation device. Prolonged or intensive use of the appliance may call for additional (such as opening a window) or more effective ventilation (such as increasing the level of a mechanical ventilation if present).
- NEVER use aluminum foil to cover oven racks or oven bottom. This could result in risk of electric shock, fire, or damage to the appliance. Use foil only as directed in this guide.
- To eliminate the hazard of reaching over hot surface burners, cabinet storage should not be provided directly above a unit. Temperatures may be unsafe for some items, such as volatile liquids, cleaners or aerosol sprays.
- NEVER leave a surface cooking operation unattended especially when using a high heat setting or when deep fat frying. Boilovers cause smoking and greasy spillovers may ignite. Clean up greasy spills as soon as possible. DO NOT use high heat for extended cooking operations.
- DO NOT heat unopened food containers, build up of pressure may cause the container to explode and result in injury.
- ALWAYS let quantities of hot fat used for deep fat frying cool before attempting to move or handle.
- NEVER wear garments made of flammable material or loose fitting or long-sleeved apparel while cooking. Clothing may ignite or catch utensil handles. DO NOT drape towels or materials on oven door handles. These items could ignite and cause burns.
- ALWAYS place oven racks in the desired positions while oven is cool. Slide oven rack out to add or remove food, using dry, sturdy potholders.
- ALWAYS avoid reaching into the oven to add or remove food. If a rack must be moved while hot, use a dry pot-holder.
- ALWAYS turn the oven off at the end of cooking.
- Use care when opening the oven door. Let hot air or steam escape before moving or replacing food.
- DO NOT cook directly on the oven bottom. This could result in damage to your appliance. Always use the oven racks when cooking in the oven.

Do not connect any appliances to the plugs above or near to the induction cooktop; connection cable insulation can melt if in contact with heat, and this may result in an injury and a property damage.

RECOMMENDED UTENSILS

- Use pans with flat bottoms and handles that are easily grasped and stay cool. Avoid using unstable, warped, easily tipped or loose-handled pans. Also avoid using pans, especially small pans, with heavy handles as they could be unstable and easily tip. Pans that are heavy to move when filled with food may also be hazardous.
- Be sure utensil is large enough to properly contain food and avoid boilovers. Pan size is particularly important in deep fat frying. Be sure pan will accommodate the volume of food that is to be added as well as the bubble action of fat.
- To minimize burns, ignition of flammable materials and spillage due to unintentional contact with the utensil, DO NOT extend handles over adjacent surface burners. ALWAYS turn pan handles toward the side or back of the appliance, not out into the room where they are easily hit or reached by small children.
- NEVER let a pan boil dry as this could damage the utensil and the appliance.
- Follow the manufacturer’s directions when using oven cooking bags.
- Only certain types of glass, glass/ceramic, ceramic or glazed utensils are suitable for rangetop surface or oven usage without breaking due to the sudden change in temperature. Follow manufacturer’s instructions when using glass.

WARNINGS

CERAMIC COOKING SURFACES

- Surface areas on or adjacent to the unit may be hot enough to cause burns. Do not touch the cooking area as long as the light indicating residual heat on the glass-ceramic cooktop area, is “on”; this indicates that the temperature in the relative area is still high.
- DO NOT COOK ON BROKEN COOKING SURFACE – If cooking surface should break, cleaning solutions and spillovers may penetrate the broken cooking surface and create a risk of electric shock. Contact a qualified technician immediately.
- Keep a close eye on children because they are unlikely to see the residual heat warning lights. The cooking zones are still very hot for some time after use, even if they are switched off. Make sure that children never touch them.
- NEVER use aluminum foil to hold the food while cooking on a glass-ceramic cooktop area.
- Never place pan with bottoms which are not perfectly flat and smooth on the cooktop area.
- If you drop a heavy pot on your cooktop area it will not break. On the contrary, if a hard object, such as the salt shaker or the spice bottle strikes the edge or the corner of the cooktop area, the cooktop area may break.
- Never use the glass-ceramic cooktop area as support surface.
- Only use cleaning products made specifically for ceramic glass cooking surfaces.
- Metal items such as cutlery or lids must never be placed on the surface of the cooktop area since they may become hot.

OVEN HEATING ELEMENTS

- NEVER touch oven bake and broil burner areas or interior surfaces of oven.
- Bake and broil burners may be hot even though they are dark in color. Areas near burners and interior surfaces of an oven may become hot enough to cause burns.
- During and after use, DO NOT touch or let clothing or other flammable materials contact heating elements, areas near elements, or interior surfaces of oven until they have had sufficient time to cool. Other surfaces of the oven may become hot enough to cause burns, such as the oven vent opening, the surface near the vent opening, and the oven door window.

CLEANING SAFETY

- Turn off all controls and wait for appliance parts to cool before touching or cleaning them. DO NOT touch the burner grates or surrounding areas until they have had sufficient time to cool.
- Clean the range with caution. Avoid steam burns; DO NOT use a wet sponge or cloth to clean the range while it is hot. Some cleaners produce noxious fumes if applied to a hot surface. Follow directions provided by the cleaner manufacturer.
- DO NOT clean, rub, damage, move or remove the door gasket. It is essential for a good seal during baking. If the gasket becomes worn or excessively soiled with food particles, replace gasket to assure a tight seal.

POWER FAILURE WARNING

Due to safety considerations and the possibility of personal injury in attempting to light and extinguish the oven burners, the grill and the oven burner should not be used during a power failure. The oven control knob should always remain in the “OFF” position during a power failure.

NEVER use appliance as a space heater to heat or warm a room to prevent potential hazard to the user and damage to the appliance. Also, DO NOT use the rangetop or oven as a storage area for food or cooking utensils.

ELECTRICAL SHOCK HAZARD

Make sure all controls are OFF and oven is COOL before cleaning. Failure to do so can result in burns or electrical shock.

DO NOT touch a hot oven light bulb with a damp cloth as the bulb could break. Should the bulb break, disconnect power to the appliance before removing bulb to avoid electrical shock.



WARNING

NEVER cover any slots, holes or passages in the oven bottom or cover an entire rack with materials such as aluminum foil. Doing so blocks air flow through the oven and may cause carbon monoxide poisoning. Aluminum foil linings may also trap heat, causing a fire hazard.

BURN HAZARD

The oven door, especially the glass, can get hot. DO NOT touch the oven door glass!

WARNING-TIPPING HAZARD

Children and adults can tip over the range if it has not been secured. This may lead to fatal injuries.

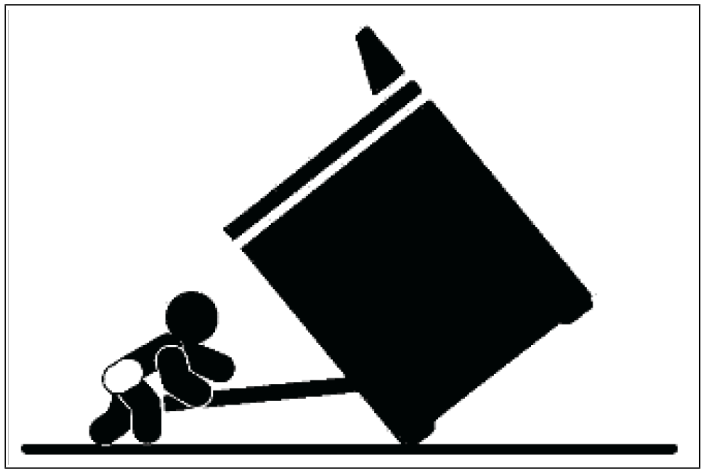

To reduce the risk of the appliance tipping, it must be secured and connected using the anti-tip device according to the installation instructions. Re-engage the anti-tip device if the range is moved.

Do not operate the range without the anti-tip device in place and engaged. Do not use the range if the anti-tip device has not been properly installed and engaged. See installation instructions for details.

Failure to observe the information contained in the installation instructions can lead to serious or fatal injuries for children and adults.

WARNING

Cancer and Reproductive Harm

www.P65Warnings.ca.gov

WORKTOP AND KNOBS LAYOUT

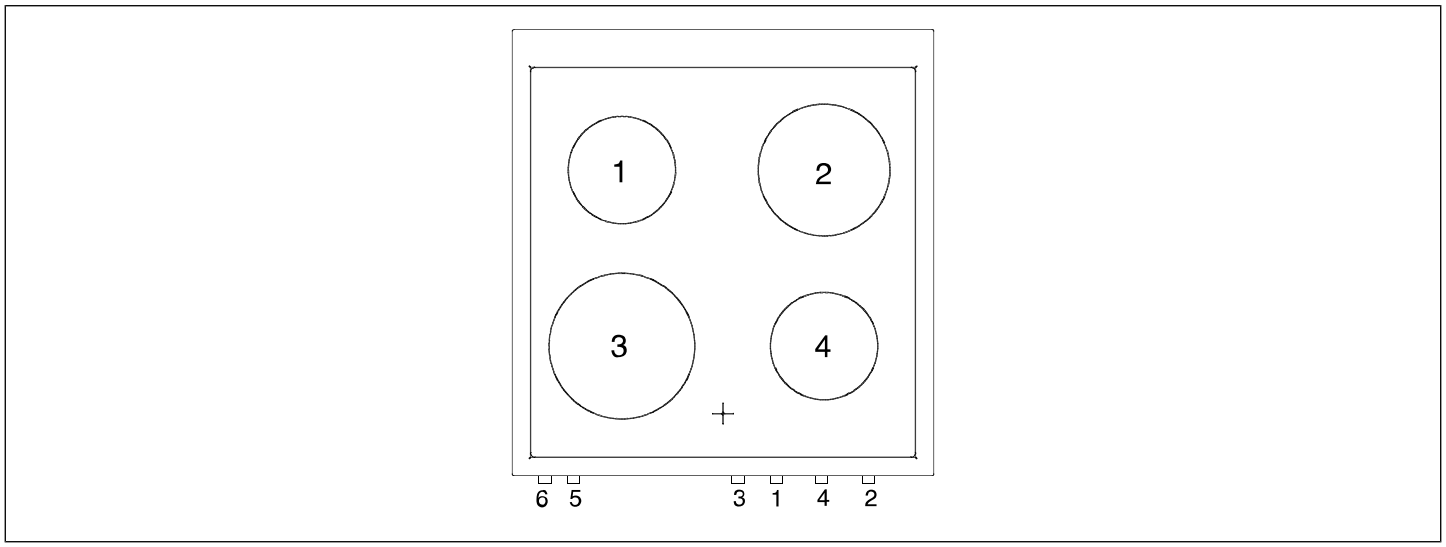

Fig. 18

HEATING ELEMENT	
1	Left rear induction element ⌀ 6″ 1/8 (155mm)
2	Right rear element ⌀ 7″ 1/2 (190mm)
3	Left front induction element ⌀ 8″ 1/4 (210mm)
4	Right front element ⌀ 6″ 1/8 (155mm)
5	Oven thermostat
6	Oven functions selector

USING THE CERAMIC HOB

The working table has 5 cooking areas, which differ in power and diameter.

Positions are clearly indicated with screen-printed round areas (see description of the hobs).

The heating process comes inside these areas. When a worktop hotplate is used for some time, the remaining surface remain hot; a red indicator in the worktop surface light will indicate it.

To obtain best results, the bottom of the hob should be thick and flat.
The diameter of the bottom of the pot (or other container) should be as near as possible the diameter of the burner you are using; using a smaller pot will cause waste of energy due to heat dispersion on the uncovered surface of the plate.

The hob surface and the bottom of the pot must be kept clean.
Following these recommendations will help you save energy.

TYPE OF PLATE	POWER
1 ceramic electrical	Left rear 1200W
2 ceramic electrical	Right rear 1800W
3 ceramic electrical	Left front 2100W
4 ceramic electrical	Right front 1200W

RESIDUAL HEAT

Each cooking zone is equipped with a device which warns of residual heat (H). After any cooking zone is switched off , a red indication light may appear on the display. This warns that the cooking zone concerned is still very hot.

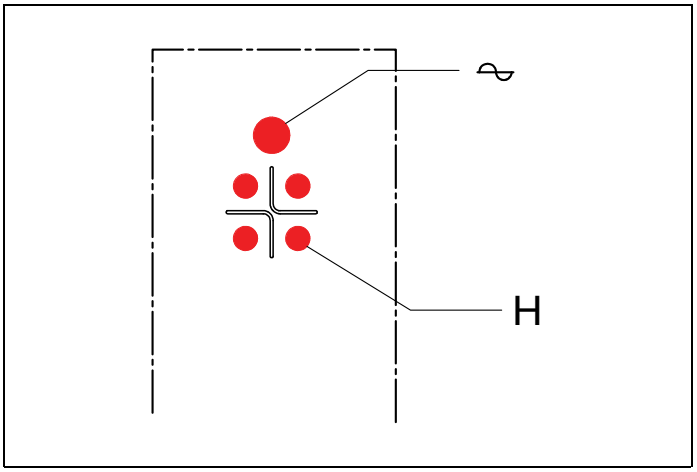

Fig. 19

HOW TO USE THE 4 ELECTRICAL HOT PLATE CERAMIC HOB

Each worktop cooking hotplate is controlled by an energy regulator switch (for 1 type hotplate). These allow you to select different power rates in continuous way from the lower position “0” (plate always “off ”) to the higher position “7” (Fig. 20) allow to reach the full power rate.

Directions showing the hotplate and related control knob is indicated on the control panel of the appliance.

A red indication light on the worktop surface will indicate that some worktop hotplate is turned on.

Once the boiling level has been reached, lower the temperature and let the food simmer. Experience will guide you in understanding how long to simmer, but obviously this also depends on the food and the kind of pot you are using. Proper use will permit you to save time and energy.

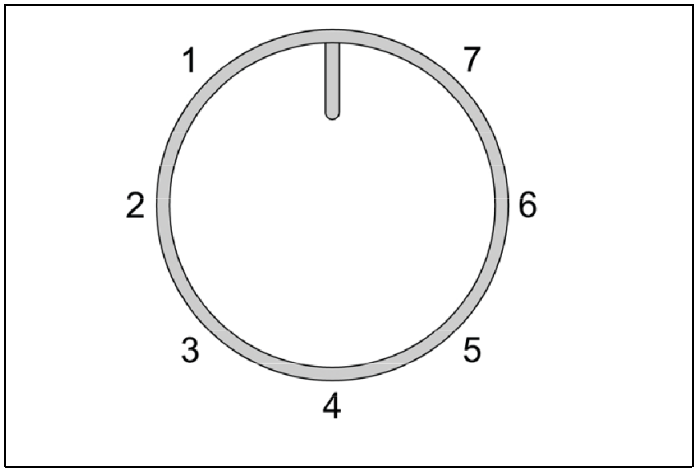

Fig. 20

WARNING

Under no circumstance use aluminium foil or plastic containers to hold the food while cooking on a glass-ceramic hob.

WARNING

Do not touch the cooking area as long as the light indicating residual heat on the glass-ceramic hob, is “on”; this indicates that the temperature in the relative area is still high.

WARNING

Your glass-ceramic hob is thermal shock resistant and resistant to both heat and cold. If you drop a heavy pot on your hob it will not break.

On the contrary, if a hard object, such as the salt shaker or the spice bottle strikes the edge or the corner of the hob, the hob may break.

WARNING

Never use the glass-ceramic hob as support surface.

TYPE OF PAN

The pans used for cooking must have certain minimum diameters to ensure satisfactory operation. Pans larger than the cooking zones can also be used, but it is important to ensure that the bottom of the pan does not touch other cooking zones, and that it is always centred over the perimeter of the cooking zone.

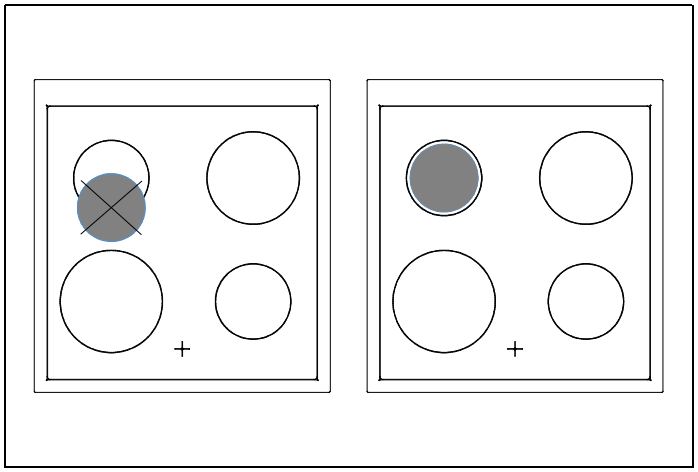

Fig. 21

The pans used must not have crowned (concave or convex) bottom.

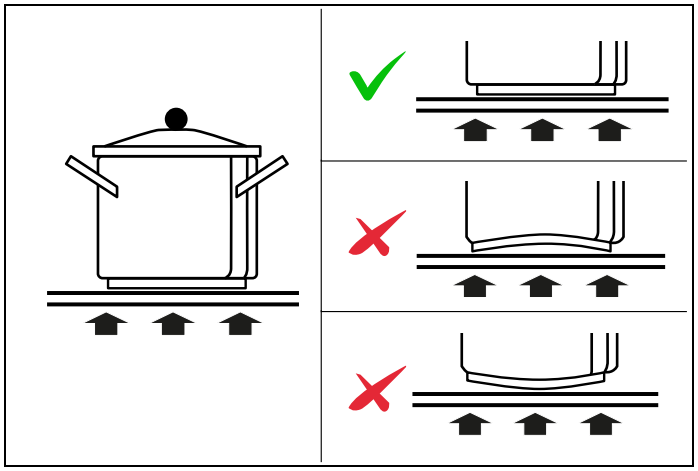

Fig. 22

RECOMMENDATIONS

- Always place your pan in such a way that its center is aligned with the centre of the element.
- Pick-up your cookware when moving them around. Do not slide them and avoid excessive rubbing of the top, as this may leave scratches on the glass surface.
- Never leave an empty pot/pan on an induction heating element, even when the element is turned OFF.
- Only use maximum power for boiling and frying.
- Avoid preheating your non-stick pans (e. g. with teflon coating) at maximum heat.
- Avoid storing solids and heavy items in the cabinets above your cooktop. They may accidentally be dropped and damage the glass top.
- **Place extra care to avoid spilling sugar or sweet mixtures onto the cooktop area during cooking, and avoid materials or substances which might melt (plastic or aluminium foil) on it. If this occurs, turn the heating off immediately and clean with a scraper while the cooking zone is still warm. If the ceramic cooktop area is not cleaned immediately, residues may form which may not be removed once the cooktop area has cooled.**

WARNING

Attention! When using the oven for the first time it should be operated for 15-30 minutes at a temperature of about 500°F/ 260°C without cooking anything inside in order to eliminate any moisture and odors from the internal insulation.

SHELVES POSITIONS

Shelves are mounted on the appropriate guides situated on the sides of the oven compartment. Insert the shelf between top and bottom guide in any of the 5 positions indicated.

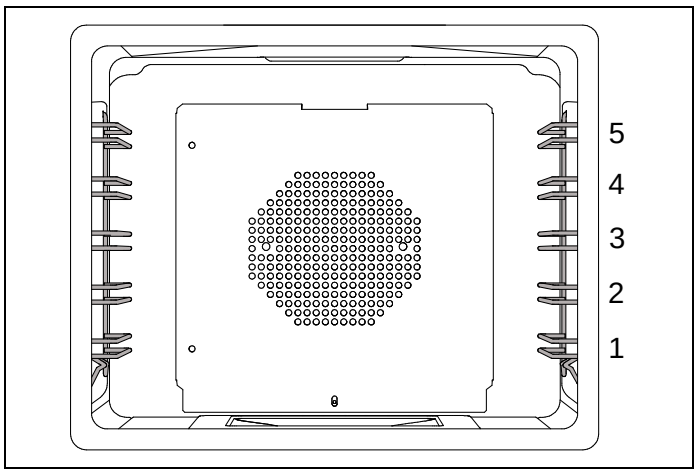

Fig. 23

COOLING FAN

Automatic operation of the cooling fan. The range cooker is equipped with a thermostatically controlled cooling fan designed to prevent the control panel and knobs from overheating. The cooling fan will operate when the oven temperature rises. It will turn off when the temperature decreases.

NOTE

It is normal for the cooling process to push heated air out into the room when the oven is on.

PREHEATING THE OVEN

Most cooking times in recipes are intended for a preheated oven and require that the oven already be at the set temperature before placing food in the oven. Preheating time depends on the temperature setting and the number of racks in the oven.

USING THE OVEN

1) Place rack in desired position and shut the door.

2) Select the oven function with the dedicated function knob. The light in the cavity will turn on.

3) Set the desired temperature with the dedicated selector knob.

This appliance is equipped with 1 indicator light on the front panel. Light on indicates that the oven heating element/s are activated.

OVEN COOKING MODES

The oven is equipped with 4 heating elements, used alone or in combination to create different cooking modes:

- Upper bake element
- Lower bake element
- Broil element
- Convection element.

The temperature setting and cooking times can vary slightly from one oven to another. It is possible that recipes and cooking times need to be adjusted accordingly.

PRE-HEAT

Use this setting for fast pre-heating the oven. This function provides the most efficient and fastest way to preheat the cavity. Preheat function is unsuitable for use as a cooking function.

BAKE

Heat from upper and lower element.

Use this setting for baking, roasting, and casseroles on a single rack.

- Standard bake: level 2 or 3.
- Taller items: level 2.
- Pies: level 1 or 2 to ensure the bottom of the crust is done without over-browning the top.
- Large cuts of meat or poultry: level 1.

BOTTOM BAKE

Heat from lower element only.

Use this setting at low temperatures for slow-cooking casseroles, custards or for warming plates. Use at high temperatures for cooking sweet and savory pastry tarts.

Use at high temperatures for cooking sweet and savory pastry tarts.

Use the same rack position as BAKE mode.

UPPER BAKE

Heat from upper element only.

Use this setting for browning and reheating dishes such as lasagne, moussaka and cauliflower cheese.

The up Bake mode is best for baking on one rack.

- Standard bake, level 2 or 3
- Tall items, level 2
- Pies, level 3 or 4 to ensure the top of the crust is done without over-browning the bottom.

BROIL

Heat from the broil element only.

The BROIL setting creates intense heat from the top of the cavity. The broil mode is effective when food is placed on upper racks.

- Beef steaks, ground meat patties, and lamb chops 1 inch or less: level 5.
- Meat 1 inches or more thick, fish, poultry, pork chops, ham steaks 1 inch or more: level 4.
- Browning food: level 5 (no longer than 15 mins).

CONVECTION BROIL

Heat from broil element and air flow convection with fan.

Use this setting for browning and cooking evenly food on all sides, including bottom. Also recommended for food that is too delicate to turn over such as fish. The fan circulates hot air around the food helping to cook it all the way through. The degree of browning on each side might be different.

The conv broil mode must be used on one rack,

- sausages and chicken portions: level 5 or 6
- foods with high water content such as bacon and chops: level 5 or 6 (door closed 400°F).

CONVECTION BAKE

Heat from upper and lower bake element and air flow convection with fan.

Use this setting to bake and roast different foods at the same time with no taste transfer. The fan circulates the hot air around the oven for uniform cooking of larger quantities of food. Use for roasting vegetables, meat and poultry, or baked fish. This function is the best one for cooking frozen products and breaded/battered chicken or fish. It may be used for cakes, cookies, biscuits and other foods on multiple racks.

Use the same rack position as BAKE. When using 2 racks, use level 2 and 4.

CONVECTION

Heat from the convection element and airflow convection with fan.

Use this mode for most recipes being careful at calibrating the time. Less time is usually required to reach the desired result when using convection. The temperature is kept uniform throughout the oven, which is particularly suitable for baking on several levels or for batch cooking.

- Single rack: use the same rack position as bake
- 2 racks: use level 2 and 4
- 3 racks: use level 1, 3, 5.

PIZZA

Heat from lower bake element and circular element and airflow convection with fan.

Use for cooking pizza, pastry or flat breads to get a perfectly cooked base.

Use level 2 or level 1 to ensure the bottom of the crust is done.

SPECIAL FUNCTIONS

LIGHT

Use this function to light the oven when the oven is off (for example to clean the oven). Turn the function knob to ‘bake’. DO NOT turn on Oven Temperature Control Knob.

PROOFING

The proof feature maintains the warm, needed for proofing yeast. It is best to start with a cool oven when using the proofing function. Turn the function knob to ‘light’. DO NOT turn on Oven Temperature Control Knob. Do not open the oven door unnecessarily.

CONVECTION DEFROST

Air is circulated by the airflow fans. The fan accelerates natural defrosting of food without heat. DO NOT leave defrosted food in the oven for more than two hours. Place the frozen food on a baking sheet. Turn the function knob to ‘CONV’. DO NOT turn on Oven Temperature Control Knob.

CONDENSATION

It is normal for a certain amount of moisture to evaporate from the food during any cooking process. The amount depends on the moisture content of the food. The moisture will condense on any surface cooler than the inside of the oven, such as the control panel.

USING ALUMINUM FOIL IN THE OVEN

Foil can be used to cover food in the oven but this should not come into close proximity with the oven elements. Foil should not be used to line the oven cavity or grill pan. This can cause overheating, buckling and cracking of the enamel surfaces.

GETTING THE BEST RESULTS

- Minimize opening and closing the oven door during operation.
- Use the rack position recommended by the recipe and fine-tune with personal experience.
- Use the bakeware recommended in the recipe.
- Store the broiler pan(s) outside the oven. An extra pan without food will impact browning and cooking.
- For tender, golden brown crusts, use light non-stick/ anodized or shiny metal pans.
- For brown crisp crusts, use dark non-stick/anodized or dark, dull metal pans or glass bakeware. These may require lowering the bake temperature 25℉ (14℃).
- Allow at least 1″ (25.4 mm) of space between the pans and the oven walls so heat can circulate around each pan.
- To keep the oven as clean as possible, cook meat on a pan and not directly on the racks.
- Cooking will continue with residual heat. remove the dish from the oven immediately to avoid overcooking.

ELECTRIC CONVECTION OVEN

OVEN COOKING RECOMMENDATIONS

FOOD	PAN SIZE	CONTROL TEMPERATURE SETTING	TOTAL SUGGESTED COOKING TIME
Cookies	12″x15″ Cookie Sheet	375℉	8 to 12 minutes
Layer Cakes	8″or 9″ Round	350℉	25 to 35 minutes
Sheet Cakes	9″x13″ Pan	350℉	30 to 40 minutes
Bunt Cakes	12 Cup	325℉	60 to 75 minutes
Brownies or Bar Cookies	9″x9″ Pan	325℉	20 to 25 minutes
Biscuits	12″x15″ Cookie Sheet	425℉ or Package Directions	10 to 15 minutes
Quick Bread	8″x4″ Loaf Pan	350℉	55 to 70 minutes
Muffins	12 cup Muffin Pan	425℉	14 to 19 minutes
Fruit Pies	9″ Diameter	425℉	35 to 45 minutes
Fruit Cobblers	9″x9″ Pan	400℉	25 to 30 minutes
Yeast Bread, Loaves	8″x4″ Loaf Pan	375℉	25 to 30 minutes
Dinner Rolls	9″x13″ Pan	400℉	12 to 18 minutes
Cinnamon Rolls	9″x13″ Pan	375℉	25 to 30 minutes
Yeast Cotter and Cake	12″x15″ Cookie Sheet	400℉	20 to 30 minutes

BROILING RECOMMENDATION

FOOD ITEM	CONTROL TEMPERATURE SETTING SELECTOR	APPROXIMATE COOKING TIME	SPECIAL INSTRUCTIONS AND TIPS
BEEF Ground Beef Patties, ½″ thick	500°F fixed temperature setting	15 to 20 minutes	Broil until no pink in center
T-Bone Steak	500°F fixed temperature setting	12 to 20 minutes	Time depends on rareness of steak
Flank Steak	500°F fixed temperature setting	12 to 20 minutes	Rare to Medium Rare
Eye of Round Roast	325°F	20 to 25 min/lb	Small roasts take more minutes per pound; reduce time by using Convection Bake
PORK Loin Roast	325°F	20 to 25 min/lb	Cook until juices are clear
POULTRY Boneless Skinless Chicken Breasts	500°F fixed temperature setting	20 to 25 minutes	Cook until juices are clear
Chicken Thighs	500°F fixed temperature setting	25 to 30 minutes	Remove skin; Cook until juices are clear
Half Chickens	500°F fixed temperature setting	30 to 45 minutes	Turn with tongs; Cook until juices are clear
Roast Chicken	350°F	75 to 90 minutes	Do not stuff; reduce time by using Convection Bake
Turkey	325°F	20 to 25 min/lb	Do not stuff; reduce time by using Convection Bake

TROUBLESHOOTING COMMON PROBLEMS WITH OVEN COOKING

PROBLEMS	CAUSE	REMEDY
Cakes burned on the sides or not done in center	Oven too hot	Reduce temperature
	Wrong pan size	Use recommended pan size
Cakes crack on top	Batter too thick	Follow recipe or add liquid
	Oven too hot	Reduce temperature
	Wrong pan size	Use recommended pan size
Food too brown on bottom	Oven door opened too often	Use door window to check food
	Incorrect rack position	Use recommended rack position
	Wrong bake setting	Adjust to conventional or convection setting as needed
Food too brown on top	Incorrect rack position	Use recommended rack position
	Oven not preheated	Allow oven to preheat
Cookies too flat	Hot cookie sheet	Allow sheet to cool between batches
Pies burned around edges	Oven too hot	Reduce temperature
	Oven not preheated	Allow oven to preheat
Pies too light on top	Oven not hot enough	Increase temperature
	Oven not preheated	Allow oven to preheat

TELESCOPIC GLIDES

The telescopic glides fit any shelf level and work with the wire shelves provided as standard equipment.

FITTING THE GLIDES

1) Locate the two spring clips at the front and back of the glides.

2) Locate the pin on the glide that indicates the back.

3) Choose the right level and position the telescopic glide near the upper wire.

4) Gently insert the front spring clip on the glide.

5) Insert the rear spring clip on the glide.

6) Pull and push each glide to ensure the correct installation and smooth operation.

7) Extract both glides to the fully extended position and place the shelf over them, making sure it is accurately placed between the rear pin and the front pin.

REMOVING THE GLIDES

1) Locate the two spring clips at the front and back of the glide.

2) Gently pull down the front spring clip.

3) Pull the glide away from the oven side - be careful not to strain the clip.

4) Repeat steps 2 - 3 on rear spring clip to remove glide.

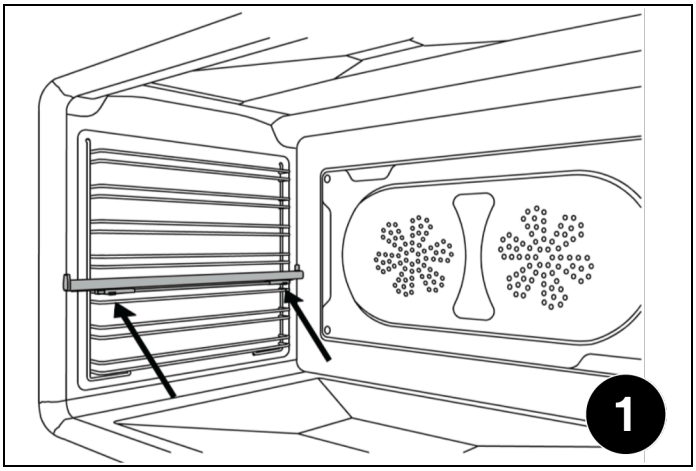

Fig. 24

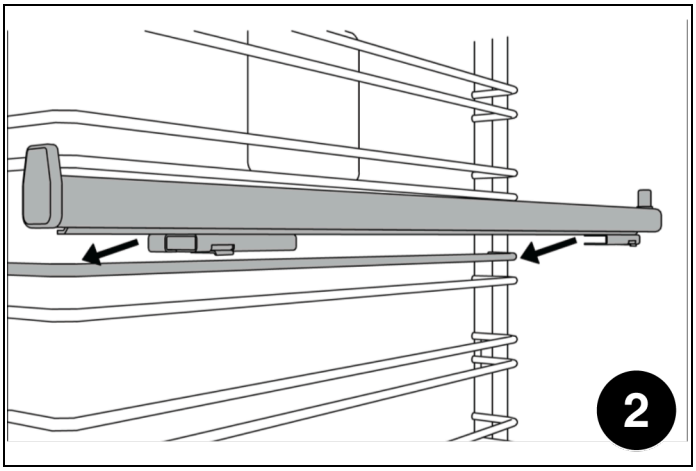

Fig. 25

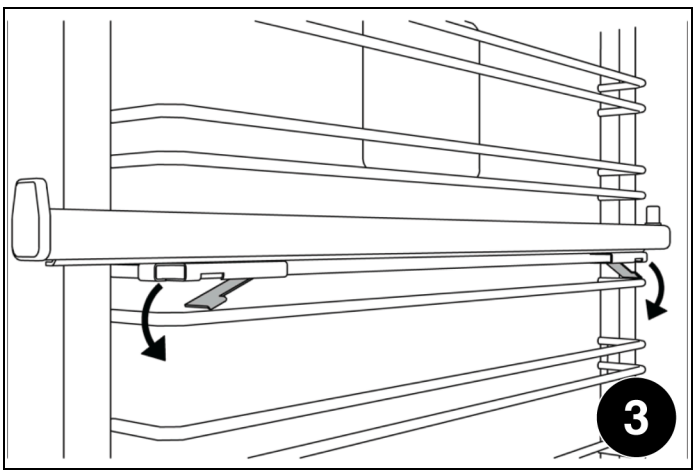

Fig. 26

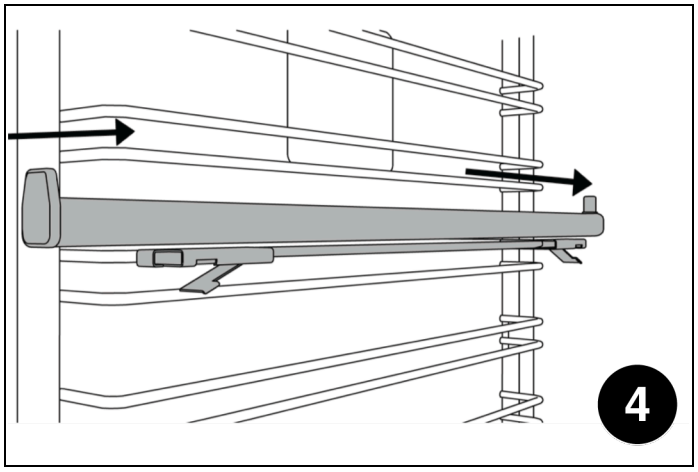

Fig. 27

KEEPING YOUR BERTAZZONI CLEAN

BURN HAZARD

Make sure the heating elements are turned off and allowed to cool completely before any cleaning and/or maintenance operation.

THINGS TO AVOID

- Do not use a steam cleaner to clean the range: the steam could reach electrical components and cause a short.
- Do not spray liquids such as cleaning agents into the openings on the bottom and top of the oven cavity.
- All surfaces can discolor or be damaged if unsuitable cleaning agents are used. The front of the oven, in particular, will be damaged by oven cleaners and descalers. All surfaces are susceptible to scratching. Scratches on glass surfaces may cause a breakage. Immediately remove any residues by using suitable cleaning products.
- The heating elements in the oven do not require cleaning. The elements burn off any residue when the oven is in use.

CLEANING STAINLESS STEEL

All stainless steel parts should be wiped with hot water and soap solution at the end of each cycle. Wipe up spills and boilovers immediately. Use suitable, non-abrasive stainless cleaning products when water and soap solution will not do the job. *DO NOT use steel wool, abrasive cloths, cleansers, or powders*. If necessary, scrape stainless steel to remove encrusted materials, soak the area with hot towels to soften the residue, then use a wooden or nylon spatula or scraper. *DO NOT use a metal knife, spatula, or any other metal tool to scrape stainless steel*. DO NOT permit citrus or tomato juice to remain on stainless steel surface, as citric acid will permanently discolor stainless steel.

CLEANING PAINTED SURFACES

Clean with a soft cloth, warm water and non-abrasive dishwashing liquid. Whilst still damp, polish dry with a clean soft cloth.

CLEANING GLASS SURFACES

Clean with cleaning detergent and warm water. Glass cleaner can be used to remove fingerprints. If using glass cleaner containing ammonia, make sure that it does not drip on exterior door surface.

CLEANING THE BROILER PAN

Clean with detergent and hot water. For stubborn spots, use a soap-filled steel wool pad.

The porcelain enamel finish is acid resistant, but not acid proof. Acidic foods, such as citrus juices, tomatoes, rhubarb, vinegar, alcohol or milk, should be wiped up and not allowed to bake onto the porcelain during the next use.

CLEANING THE CERAMIC COOKTOP

Allow the glass to cool down until the residual heat indicator is off before cleaning. Never use scouring powders or paste, metal scourers, oven cleaners or any abrasive cleaning products on the hotplate. Clean spillovers before using the cooktop again.

For light cleaning, wipe with a soft cloth, warm water and dishwashing liquid. For a streak free finish, polish dry with an microfiber cloth. For more stubborn marks and to condition the surface, use a good quality cooktop cleaner/ conditioner, following the manufacturer's instructions. For spillages with high sugar content such as jam, or the accidental melting of plastic or alloy materials, turn off the heating zone and remove the spillage immediately.

Use caution because the heating area maybe very hot.

CLEANING THE OVEN CAVITY

- Always allow the oven interior to cool before cleaning.
- Do not allow vinegar, wine, coffee, milk, salt water or fruit juices to remain in contact with enamelled surfaces for prolonged periods as they may stain or discolor the surface.
- Never use sharp utensils to remove stains as this could scratch the surface.
- Never use steam cleaners on the oven interiors as steam may damage electronic parts.
- For light cleaning, wipe with a soft cloth, using warm water and washing up liquid. For heavier residues, use a cream cleaner and a nylon scourer.
- Oven cleaning products can be used according to the manufacturer's directions but care should be taken that they do not come in contact with any stainless steel, chrome, painted or alloy parts of the range or the door seals and elements.

CLEANING OVEN RACKS AND SUPPORTS

Clean with detergent and hot water. Stubborn spots can be scoured with a soap-filled steel wool pad.

Keeping appliance area clear and free from combustible materials, gasoline and other flammable vapors or liquids.

Not obstructing the flow of combustion and ventilation air. These simple tasks can be performed by the owner. For any other maintenance task, we recommend employing a trained service technician. Please call our toll free line to identify service technicians in your area:

If located in the USA

866 905 0010

https://us.bertazzoni.com/more/support

If located in CANADA

800 561 7265

https://ca.bertazzoni.com/more/support

REPLACING OVEN LIGHTS

WARNING

Electric shock hazard!

Disconnect the electric power at the main fuse or circuit breaker before replacing bulb. DO NOT touch bulb with bare hands. Clean off any signs of oil from the bulb and handle with a soft cloth.

TOP OVEN LIGHT

Bulb type: halogen G9 120 V, 25 W

- Make sure the heating elements are turned off and allowed to cool completely. Disconnect the appliance from the power supply.
- Unscrew the glass cover and remove the halogen bulb.
- Place a new halogen bulb in its slot. DO NOT touch bulb with bare hands.
- Screw the glass cover back in place.
- Reconnect the oven to the electrical supply.

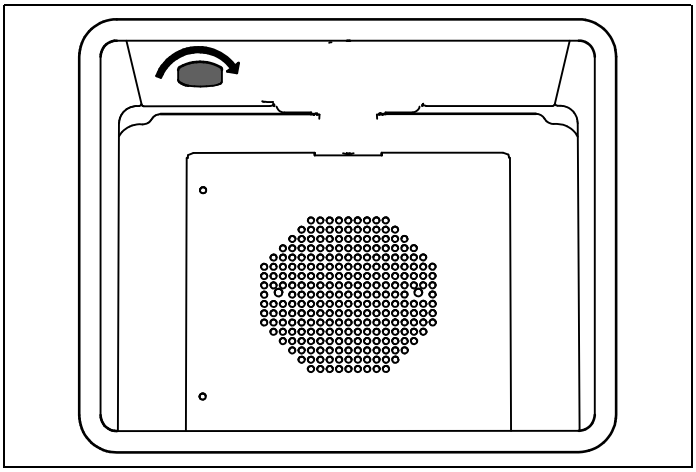

Fig. 28

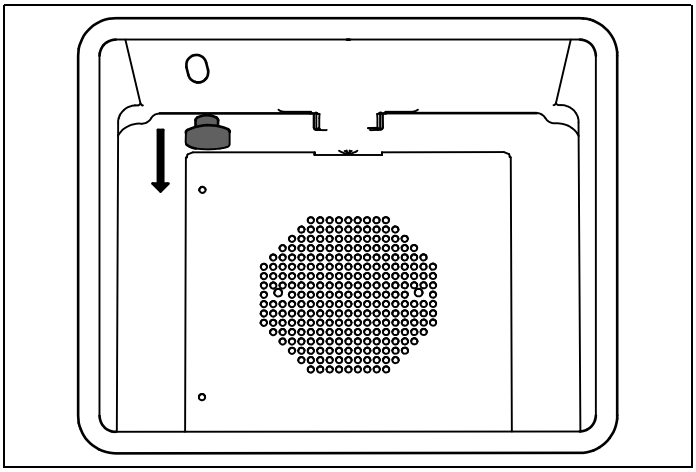

Fig. 29

TROUBLESHOOTING

Here are answer to common problems you may experience. You are also welcome to call our toll free Customer Service line to troubleshoot any issue with your Bertazzoni.

If located in the USA

866 905 0010

https://us.bertazzoni.com/more/support

If located in CANADA

800 561 7265

https://ca.bertazzoni.com/more/support

THE OVEN WILL NOT OPERATE

Is there power to the range? Check the switch fuse or circuit breaker.

THE CONTROL KNOBS ARE GETTING TOO HOT

Are you cooking with the oven door open? Keep the oven door shut when not in use or when grilling/broiling.

A CONTROL KNOB IS LOOSE ON ITS SHAFT

The knob retaining spring clip may have been damaged. Call our service department for advice and a replacement if necessary.

FOOD IS COOKING TOO QUICKLY

Are you using a convection mode?

When using a fan-assisted oven cooking mode, it is recommended to reduce the cooking temperature by 70°F (20°C) compared to conventional cooking.

FOOD IS NOT COOKING EVENLY

Are you cooking large amount of food or are you using large bakeware?

Air needs to circulate through the oven for even cooking. Remove the grill pan from the oven when not in use and always allow a gap on all four sides of dishes. You may need to turn your bakeware during the cooking cycle. Oversized baking sheets, roasting pans and cakeware will act as a baffle and prevent hot air from moving evenly around the cavity. Choose cooking equipment that allows a minimum of 1 inch (2.5 cm) space on all sides to allow the free movement of heat inside the cavity.

GRILLING IN THE OVEN IS SLOW

Have you selected the correct function?

CONDENSATION FORMS IN THE OVEN

Have you pre-heated the oven?

Condensation is less likely to form when the oven or grill is pre-heated before use.

SMOKE IS GENERATED IN THE OVEN

Have you selected the right cooking temperature? Are you cooking food with high fat? Do you rarely use the grill? Have you cooked fat under the grill? Does the oven interior need to be cleaned?

Remember to reduce the oven temperature by 70°F (20°C) if using a fan function with a recipe designed for conventional cooking. Use high-sided dishes to contain fats and splashes. Leave the grill on for a few minutes after grilling or roasting to burn off fat deposits from the oven roof. Oven surfaces should be cleaned regularly to prevent build-up of cooking residues.

Please kindly register on our web site www.bertazzoni.com to validate your new product warranty and help us to assist you better in case of any inconvenience.

CUSTOMER CARE

For any warranty information and service request, contact us:



In USA: https://us.bertazzoni.com/more/support

In CANADA: https://ca.bertazzoni.com/more/support



www.bertazzoni.com
Via Palazzina, 8,
42016 Guastalla RE

© 2025 BERTAZZONI. All rights reserved.

3100891_r.16989