MAST244CEMXB

24 INCH 4 HEATING ZONES, ELECTRIC OVEN



GENERAL CHARACTERISTICS	
Worktop	Squared 4 ceran zones
Front right	1200W
Front left	2100W
Back left	1200W
Back right	1800W
Knobs	Master black with ring
Cooking modes	11
Shelves	2 standard with handle
Levels	Laterals grids
Inner door	Modular 3 glasses
Door hinges	Soft motion
Storage compartment	Fixed stainless steel

TECHNICAL SPECIFICATIONS	
Electrical requirements	120/208 V 60HZ - 7500W 35/40.5A
Absorbed current [A]	35/40.5 A
Packaging dimensions	42 1/2 27 9/16 29 1/2

MAST244CEMXB

24 INCH 4 HEATING ZONES, ELECTRIC OVEN

DIMENSIONS

SIDE VIEW

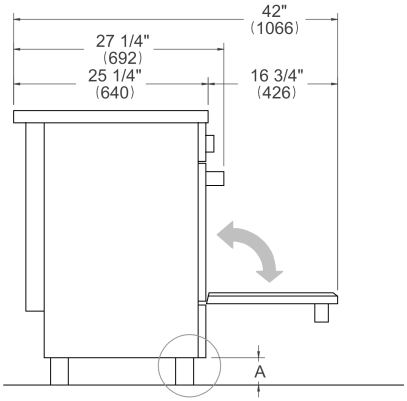

LEG DETAILS

FRONT VIEW

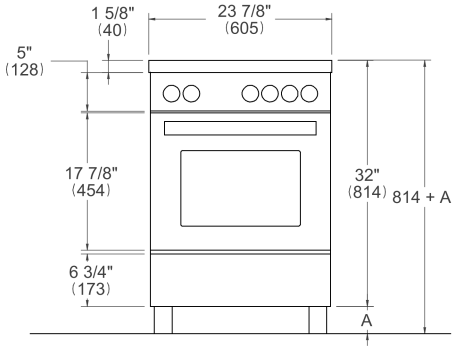

REAR VIEW

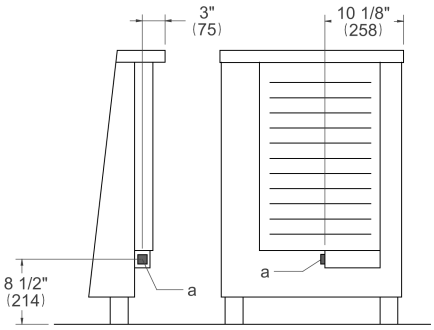

INSTALLATION

E

A properly-grounded horizontally mounted electrical receptacle should be installed no higher than 3” (7.6 cm) above the floor, no less than 2” (5 cm) and no more than 8” (20,3 cm) from the left side (facing product). Check all local code requirements.

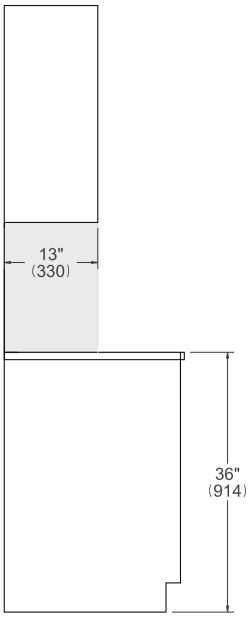

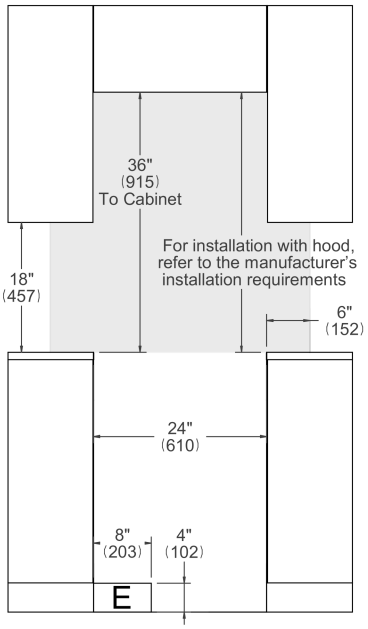

NOTE

a. Electrical Connection

b. Gas Connection

Disclaimer: while every effort has been made to insure the accuracy of the information contained in this document, Fratelli Bertazzoni reserves the right to change any part of the information at any time without notice. For detailed installation specifications consult the installation manual. Fratelli Bertazzoni, Bertazzoni and the winged wheel brand icon are registered trademarks of Bertazzoni Spa.