FPRO30FSSKX

PROFESSIONAL SERIES
30" ELECTRIC CONVECTION OVEN IN STAINLESS STEEL
SELF CLEAN



A Legacy of Italian Excellence
With over 140 years of heritage, Bertazzoni remains a leader in kitchen innovation. The latest built-in oven line-up continues this tradition, combining state-of-the-art technology, impeccable design, and user-friendly features to elevate the cooking experience.

The Next Generation of Bertazzoni Built-in Ovens
Bertazzoni presents a new era of built-in ovens, blending advanced technology with refined Italian craftsmanship. Designed for both professionals and home chefs, these ovens ensure precision, efficiency, and an unparalleled cooking experience.

Expanded Capacity and Enhanced Installation Flexibility
The newly designed oven offers a spacious 4.8 cu.ft. cavity, increasing capacity by 17% compared to previous models.

Advanced Cleaning Solutions
The Hydro Cleaning system harnesses the power of steam to soften dirt residues, making oven cleaning effortless. This feature minimizes the need for harsh chemicals, ensuring a more sustainable and hygienic kitchen environment.

Sustainable and Eco-friendly Packaging
Bertazzoni prioritizes environmental responsibility with EPS-free packaging, reducing waste and ecological impact. This commitment aligns with modern sustainability standards and eco-conscious initiatives.

PRODUCT FEATURES	
Oven type	Electric convection self-clean oven
Power Rating (Rating at 240 V)	Bake: 3500 W Broiler: 3400 W Convection: 2420 W
Oven Volume	4.8 cu.ft.
Convection System	1 Fan
User interface	Knobs and Touch with white led
Cooking modes	Bake, Broil, Convection, Convection bake, Convection broil, Convection roast, Pizza
Special features	Proofing, Warming 150 °F
Shelf levels	7
Door hinges	Soft Closing
Included accessories	1 wire shelf flat 1 baking tray with roasting trivet
Cleaning	Self Clean, Hydro Clean
TECHNICAL SPECIFICATIONS	
Electrical supply	120/208 V 60HZ - 4400 W 120/240 V 60 HZ - 5500 W 25 Amp dedicated circuit
Power connection	Metal conduit with 59" power cord
Certification	cULus
Warranty	2 years parts & labor
Product dimensions	W: 29 7/8" H: 28 1/4" D: 24 5/8"
Cut out dimensions	W: 28 1/2" H: 27 1/4" D: 24 5/8"
Packaging dimensions and weight	W: 33 3/8'' H: 35 7/8" D: 30'' 238.0 lbs

FPRO30FSSKX

PROFESSIONAL SERIES
30" ELECTRIC CONVECTION OVEN IN STAINLESS STEEL
SELF CLEAN

PRODUCT DIMENSIONS

SIDE VIEW

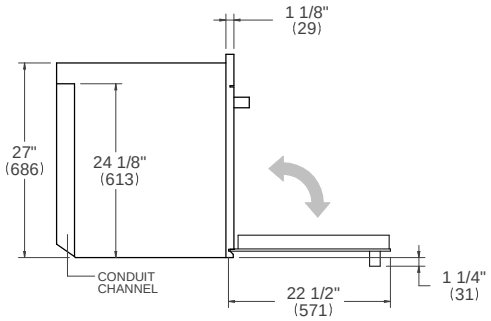

FRONT VIEW

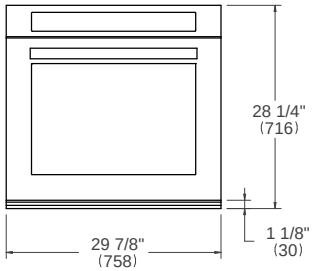

TOP VIEW

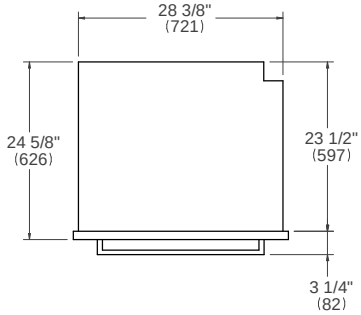

ELECTRICAL CONNECTION

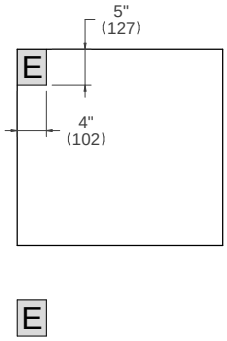

For single ovens installed into a wall cabinet, the electrical junction box may be located above, below to the left or right of the unit within reach of the power cord.
Placement within the opening may be require additional cabinet depth.

INSTALLATION REQUIREMENTS

Minimum suggested load on cabinet base board 275 lb (125 kg)

CUTOUT DIMENSIONS

TOP VIEW

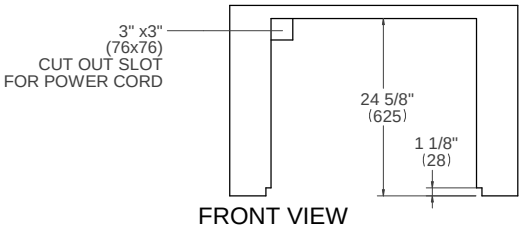

SIDE VIEW

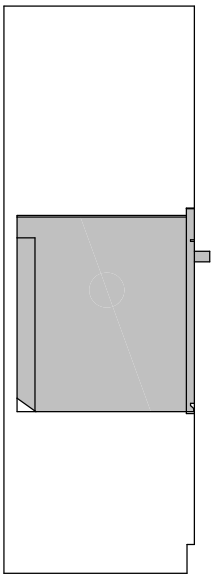

FRONT VIEW

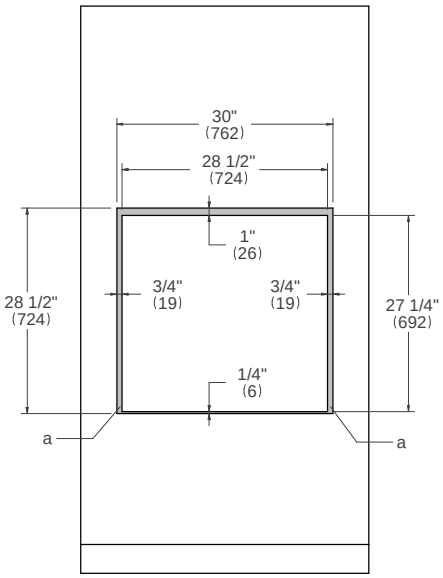

(a) Visible Area – Match finish to cabinetry

For installation of multiple products in combination, refer to the Design Guide at us.bertazzoni.com or ca.bertazzoni.com

Disclaimer: while every effort has been made to ensure the accuracy of the information contained in this document, Fratelli Bertazzoni reserves the right to change it at any time without notice. For detailed installation instructions, consult the installation manual. Fratelli Bertazzoni, Bertazzoni and the winged wheel brand icon are registered trademarks of Bertazzoni Spa.