Step 6 : Before driving, fold the swing arm by pulling up on lever B, rotating the arm to the left, and closing it. Ensure the arm is securely locked when lever A clicks into the notch.

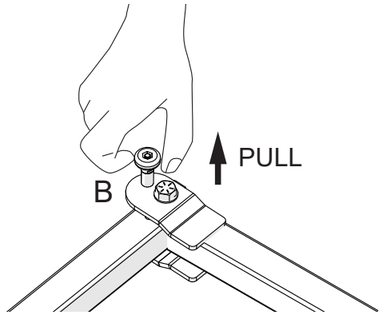

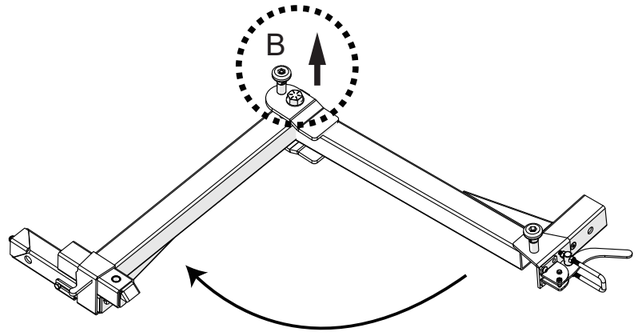

Step 7 : Pull the clamp handle to the left, rotate the U-bolt to the right, then pull the clamp handle to the right until it is fully tightened.

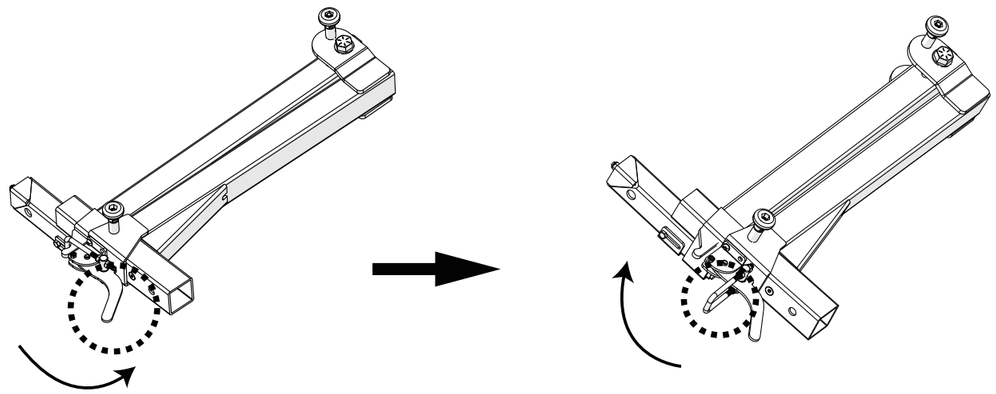

INSTALLATION COMPLETE

Step 8 : Before driving, ensure that the swing away adapter is securely locked for safety.

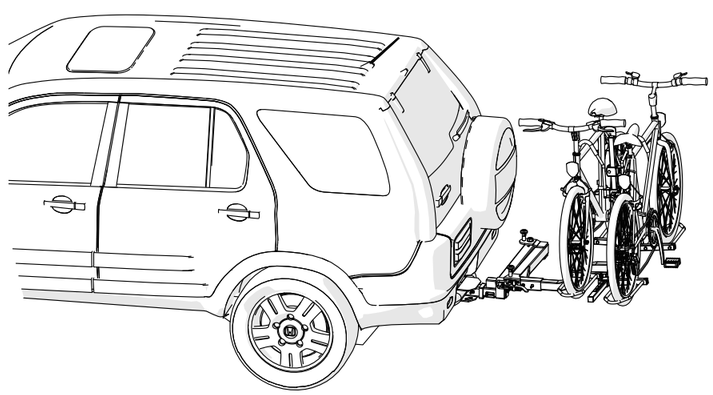

AVENTON

Model: ABR007

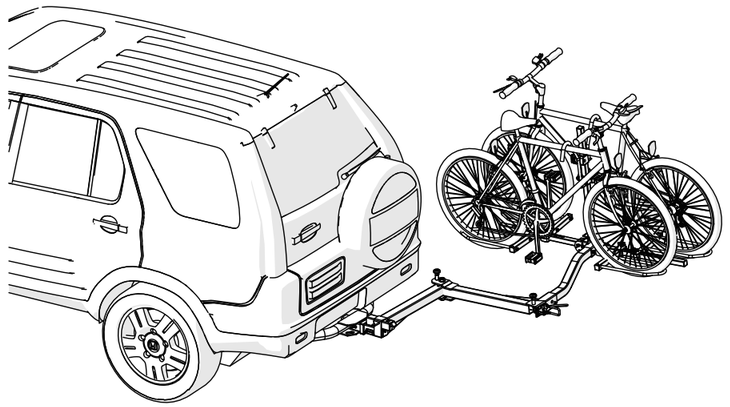

PARTS

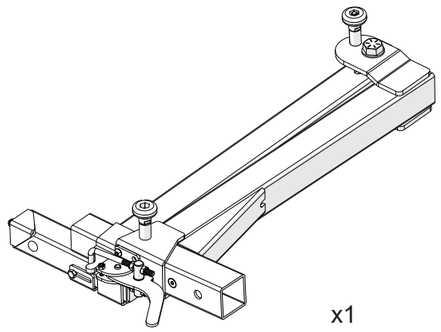
x1


x1

x1

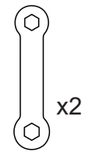
x2

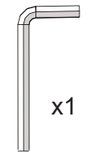
x1

M5

FEATURES

/ Max loading weight : 320 lbs
/ Mounts to any vehicle and rack with 2” hitch receiver compatibility
/ Do not use the swing-away extension for RVs and fifth wheels
/ Integrated anti-wobble safety system (patented)
/ Rotates 90 degrees, allowing access to the entire hatch without unloading bikes or cargo
/ Easily toggle the clamp to lock the swing arm securely, ensuring a firm and stable ride even on bumpy and rough roads

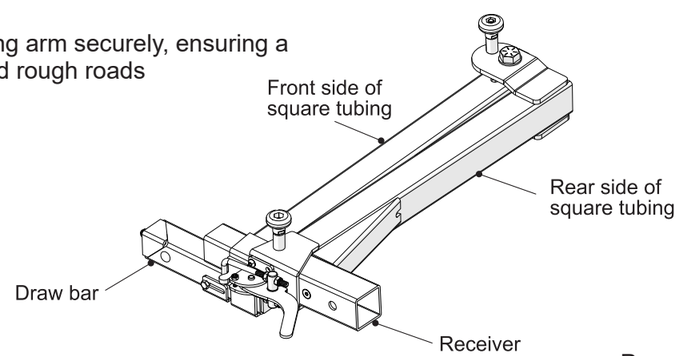

ASSEMBLY AND INSTALLATION

Step 1 : Insert the draw bar into the 2” hitch receiver and secure it using the included L-shaped locking pin.

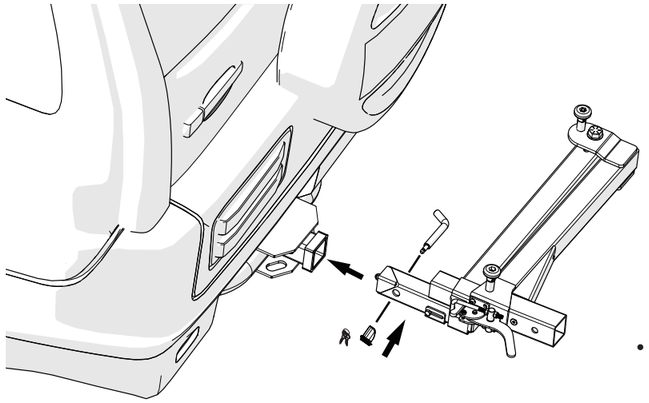

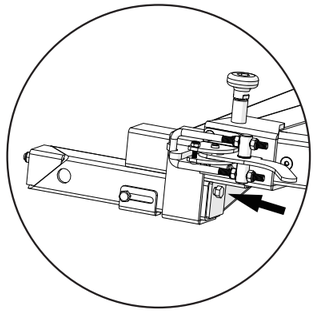

- To secure the anti-wobble system, use a 13mm socket to tighten the screws firmly.

Step 2 : Insert the 2” bike rack draw bar into the swing away receiver tube and lock it in place with the hitch pin of rack.

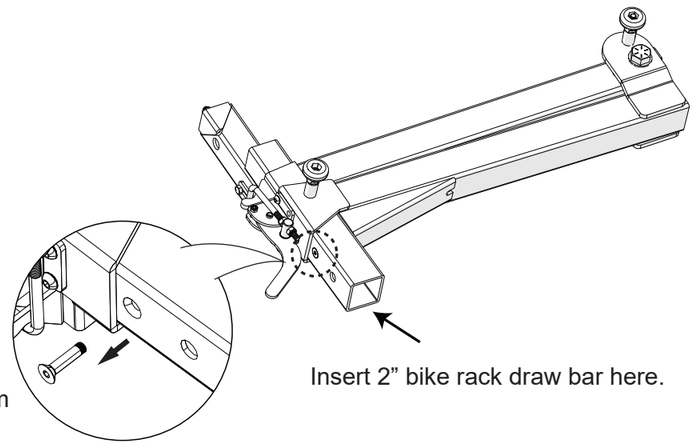

- Remove the stopper bolt from the receiver if the drawbar of rack is too long, then align the hole on the right side.

Step 3 : Pull the clamp handle to the left, open the U-shaped handle.

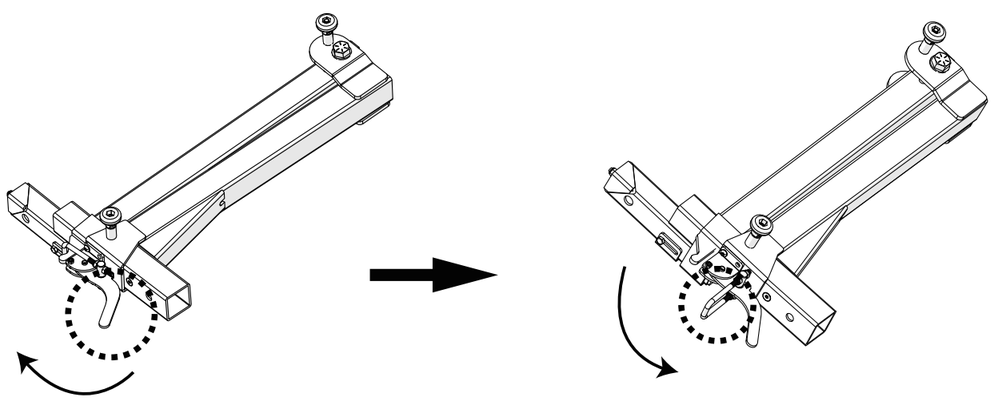

Step 4 : Pull the lever A vertically and rotate the swing arm outward until it reaches approximately a 30-degree angle.

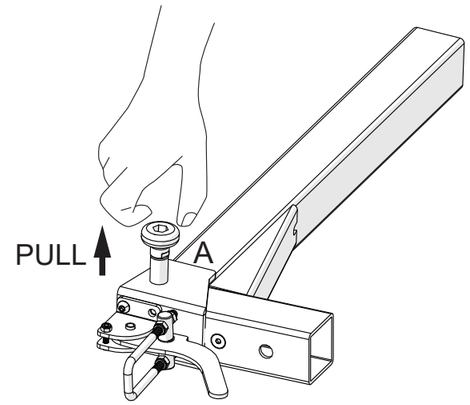

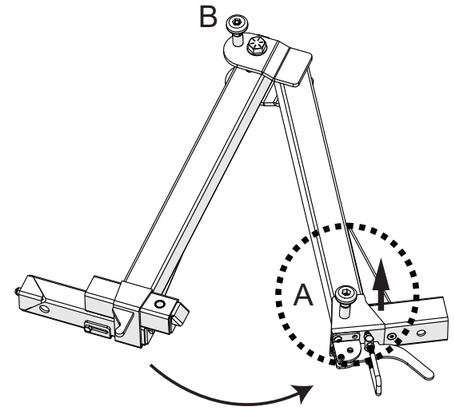

Step 5 : Pull the lever B vertically and continue to extend the arm outward until it reaches a 90-degree angle.(max: 90-degree angle)

