AVENTON

Hitch Rack Installation

Compatible with all Aventon E-Bikes

Hitch Rack Installation

Compatible with all Aventon E-Bikes

■ Accessory Components

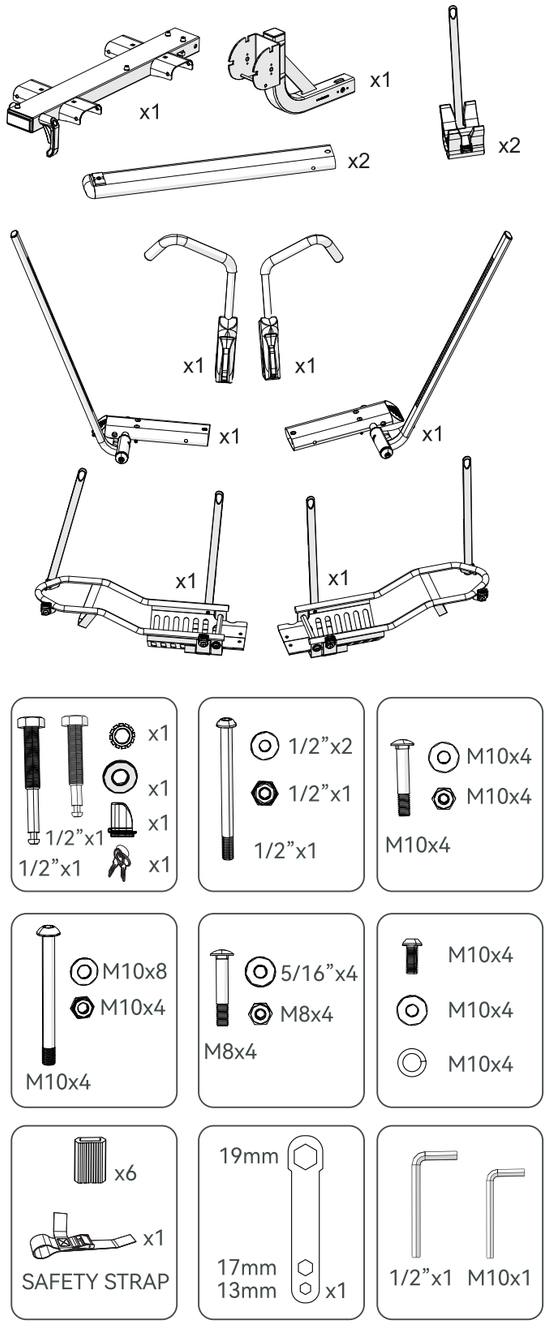

■ Installation Process

1. Insert the draw bar into the vehicle's 2" hitch receiver. Select the short or long bolt to install based on your car type, pair the 1/2" hitch bolt with the two washers and thread it into the hitch from right to left, as shown. Torque to 33Nm and ensure the 1/2" hitch bolt is fully tightened to eliminate rack wobble before attaching the lock.

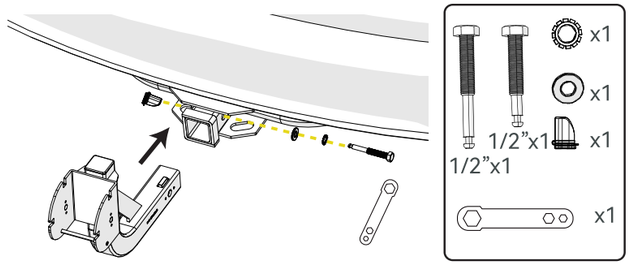

2. Attach the rack center support to the draw bar using the 1/2” bolt, pre-installed tabbed washers, and 1/2" nut, as shown in the figure below. Torque to 33Nm.

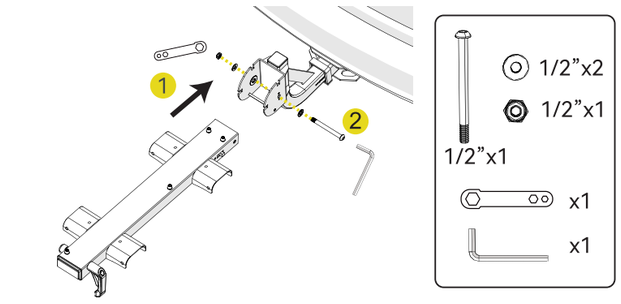

3. Install the strap buffers onto the wheel straps and use the wrench, M8 bolts, 5/16” washers, and M8 nuts to secure the oval tubing of the cam arm assembly to the front wheel holder. Torque to 20Nm. Then, install the M10 bolts and M10 washers into the lateral side of front wheel holder. Torque to 33Nm.

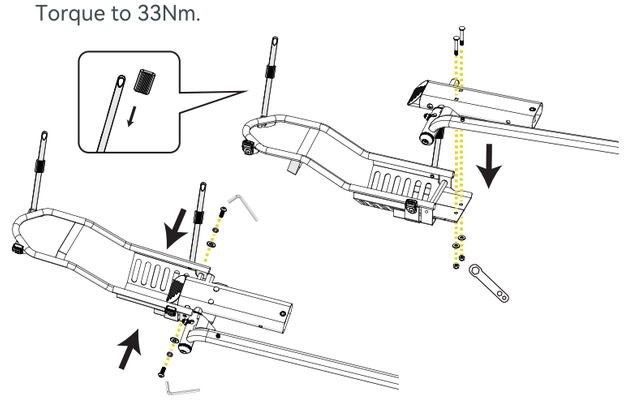

WARNING

Pre-Trip & Loading Warnings

• Weight & Position Limits: Never exceed the maximum load capacity of the carrier (170 lbs for two e bikes and 85 lbs per e bike) or your vehicle's hitch receiver (always follow the lower weight limit). Always load the largest and heaviest bikes closest to the car.
• Frame Restrictions: This carrier is only for standard bike frames. Do not transport tandem or recumbent bikes.
• Carbon Frames/Forks: Consult your bike manufacturer before loading. Aventon assumes no liability for damage to carbon components.
• Remove Loose Items: You must remove all easily detachable parts before driving (e.g., bike covers, child seats, baskets, locks, and air pumps) as they can fly off and endanger others.
• Wheel & Strap Integrity: Ensure tires are fully inflated. Secure wheelstraps tightly around the wheels, and replace straps immediately if they are cracked or worn.
• Vehicle Interference:
  o Exhaust Heat: Do not position bike tires or carrier components directly behind the hot exhaust pipe to prevent heat damage.
  o Automatic Trunk/Tailgate: Disable any automatic opening features; you must open the trunk manually when the carrier is attached.
• Always ensure the hitch pin is fully inserted, secured with the provided lock/cotter pin, and the anti-rattle mechanism is tightened before every trip.
• Always remove e-bike batteries before transport.

Fitting & Hardware Safety

• No Modifications: Never modify the carrier or its parts in any way.
• No Extenders or Adapters: Do not use hitch extenders, adapters, or swing-away devices unless explicitly authorized by Aventon.
• Towable RVs (Towed Vehicles): Do not install this carrier on a trailer or any other towed vehicles including 5th wheel, camper van, travel trailer and other trailers.
• Do not install this carrier at any motorized RVs (Motorhomes)
• Lock Mechanisms: If the carrier tilts, ensure the mechanism is securely locked in the transport position. If the carrier has a lock, it must remain locked during transit with the keys removed and kept inside the vehicle.
• Requires a 2-inch Class III or higher hitch receiver. DO NOT use with 1.25-inch receivers. DO NOT use 1.25" to 2" hitch adapters.

Driving Regulations & Adjustments

• Strict Speed Limits:
  o Maximum driving speed under any circumstance is 65 mph.
  o Maximum speed over speed bumps is 6 mph.
• Regular Security Checks: Stop and check the security of the carrier and its load after driving the first 30 miles (50 km), and at regular intervals after that.
• Altered Vehicle Dimensions: Remember that your vehicle is now wider, longer, and taller. Take extreme care when reversing, entering garages, or boarding ferries.
• Driving Dynamics: Be prepared for changes in braking behavior, cornering, and increased vulnerability to side winds or wind noise.
• Legal Compliance: Ensure the carrier does not block your tail lights or license plate. If it does, you must install an external light board or additional number plate in accordance with local laws.
• Not intended for off-road use. Warranty is void if used on rough, unpaved terrain.

Maintenance & Storage

• Car Wash Warning: Remove the carrier before using an automatic car wash.
• Corrosion Prevention: Clean the carrier regularly with warm water or car shampoo, especially after exposure to coastal salt water or winter road salt.
• Storage: Store the carrier in a dry environment when not in use. For environmental, safety, and fuel economy reasons, remove the carrier from the car entirely when you aren't using it.
• Key Security: Write down your lock and key numbers immediately so you can quickly order replacements if they are lost.

Aventon is not responsible for any damage to property or personal injury caused by incorrect mounting or use of the carrier that conflicts with these instructions.

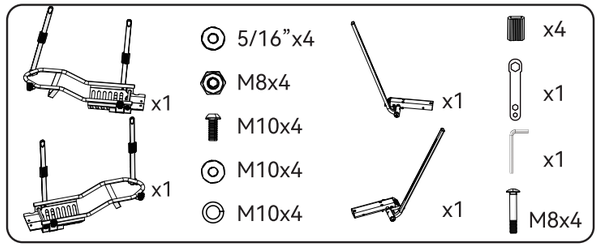

4 Install the strap buffers onto the rear wheel straps and slide the black plastic wheel holder onto the oval tubing.

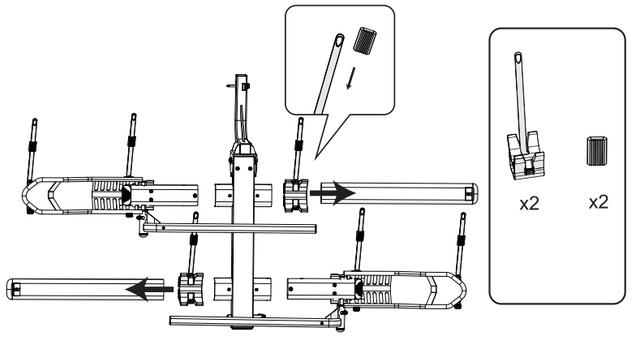

5 Fasten both ends of the oval tubing by inserting the M10 short bolts from the top and thread the nuts with washers to the bottom side. Secure both ends using M10 long bolts, M10 washers, and M10 nuts. Install them laterally and secure them in place. Torque each bolt to 33Nm.

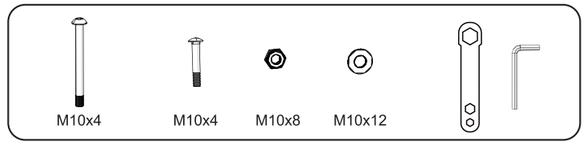

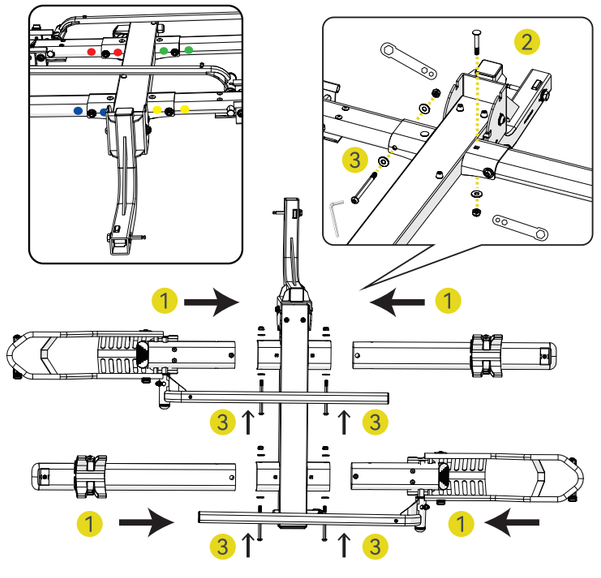

6 Install the wheel hooks onto the cam arm assemblies, as shown below.

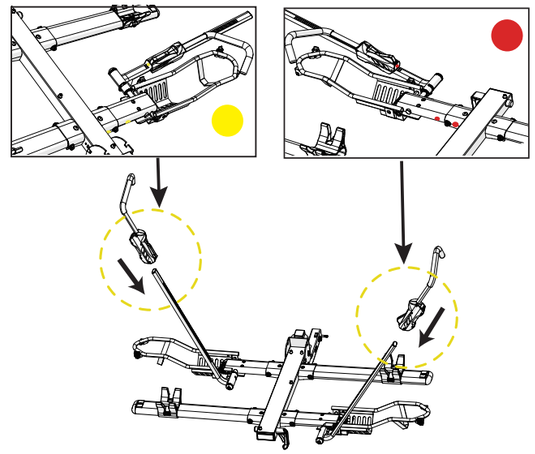

7 Securing the Wheel Hook

Weight & Position Limits: Never exceed the maximum load capacity of the carrier (170 lbs for two e bikes and 85 lbs per e bike) or your vehicle's hitch receiver

7a. Standard Front Wheel Setup
•Positioning: Slide the wheel hook down so it rests a maximum of 1 inch away from the front fork.
•Securing: Ensure the tires are fully inflated, then firmly press the hook downward onto the tire.
•Verification: Gently shake the bicycle to confirm the hook is fully locked and secured.
•Tire Pressure: Ensure the bicycle tires are properly inflated before securing the hook.
WARNING: If the wheel hook exceeds more than 1 inch away from the front fork, it may cause the wheel hook to disengage during transit, risking loss of the bicycle and personal injury.

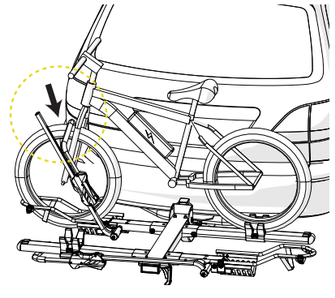

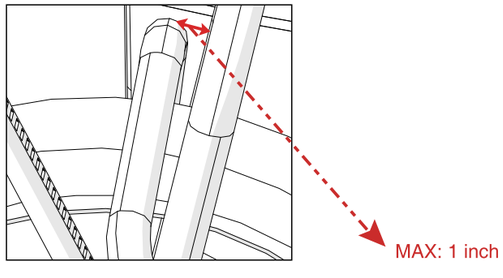

7b. Setup for Bicycles with Fenders
•Hook Angle: For bicycles equipped with front fenders, the wheel hook must be positioned at a maximum angle of 125° relative to the e-bike tray.
WARNING: If the hook angle exceeds 125°, it may cause the wheel hook to disengage during transit, risking loss of the bicycle and personal injury.

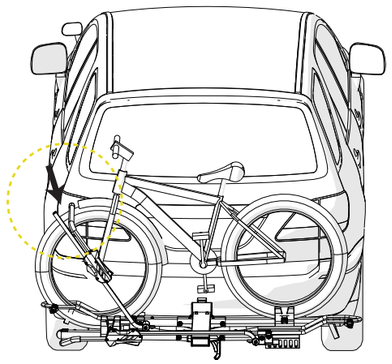

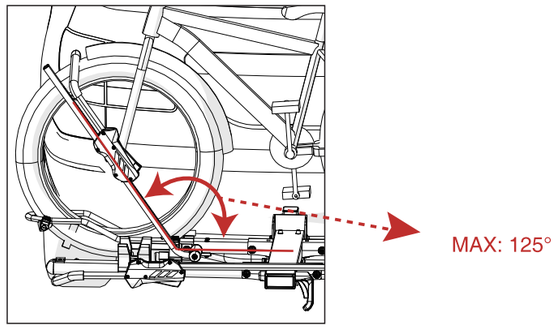

8 Wrap the wheel ratchet straps around the bottom end of the front and rear wheels and tighten them securely.
Notice! The buckle of the ratchet strap must face outwards.

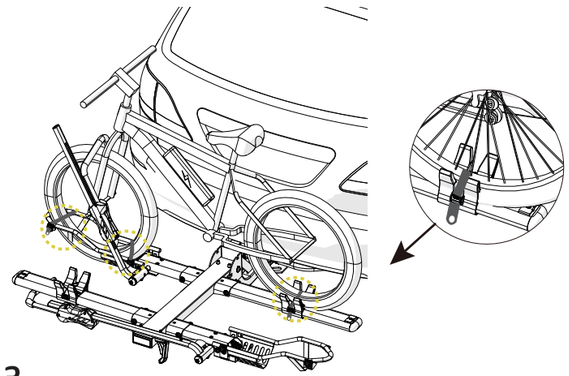

9 When installing a secondary bike, position it 180 degrees opposite of the first bike. Wrap the safety strap around each bike's top tube from underneath the bike rack and then tighten it securely.


x1 SAFETY STRAP

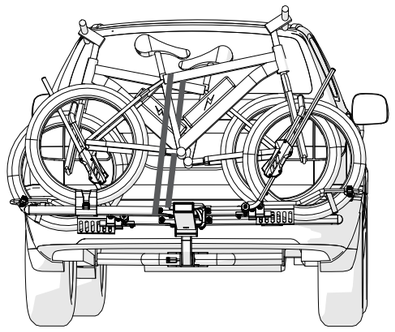

10 **Smart Tilting Feature.**
While supporting the hitch rack, press the lever button and turn the release lever forward. Then, slowly lower the bikes to the fully tilted position. Ensure the release lever is reengaged and locked into the third, lowest tab of the draw bar assembly.

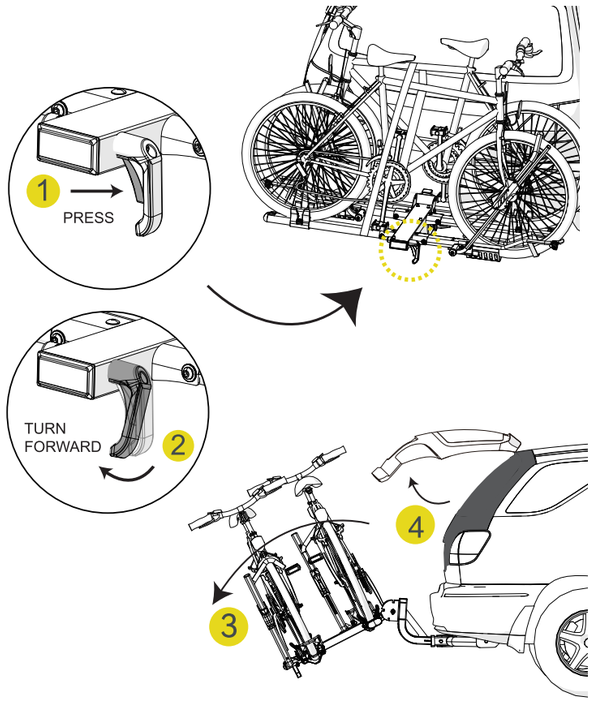

11 **Folding the Rack into Transport Position**

11a. Folding the Rack
1.Support and Release: While supporting the weight of the bike rack, press down on the lever button and turn the release lever forward.
2.Lift: Slowly lift the rack upward toward the vehicle until it reaches the fully vertical position.
3.Lock: Ensure the release lever fully re-engages and locks securely into the highest tab on the drawbar assembly.

11b. Securing Components (When Not in Use)
•Hook Position: Lower and secure the clamping wheel hooks directly onto the plastic rear wheel holders.
•Fasten Straps: Thread and fasten the ratchet straps over the wheel hooks to lock them down.

•Vehicle Protection Warning:
CAUTION: Always secure the wheel hooks and ratchet straps when the rack is empty. If left loose, components may move freely during transit and cause damage to your vehicle's trunk or tailgate.

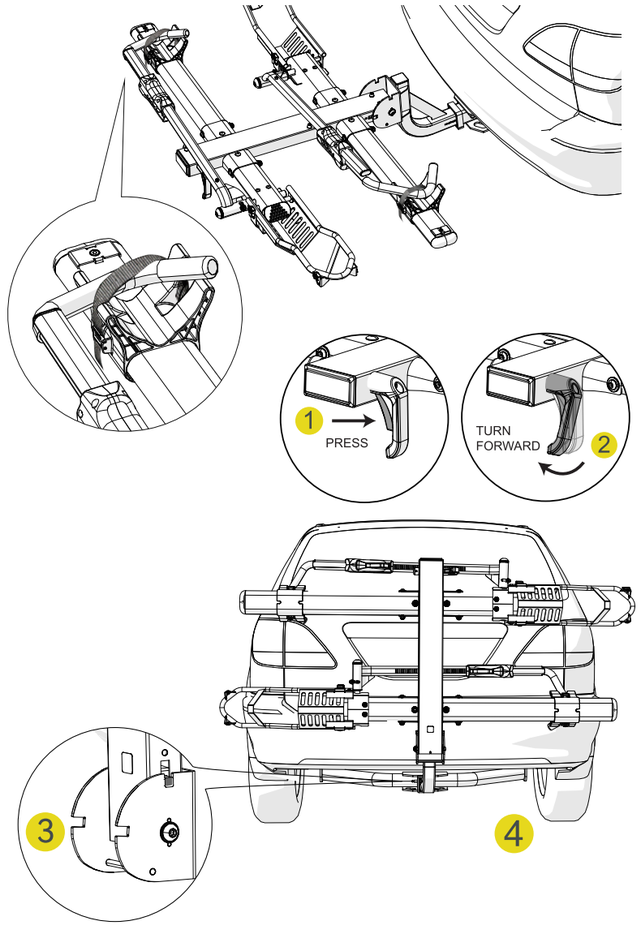

Notice
The ramp is optional equipment.
If you need it, please purchase seperately.

