MAIN POST FOLDING FUNCITION

Step 9 : Release the safety pin to allow the main, vertical tube to fold away from the vehicle. This function can allow access to the vehicle's trunk and can also help load the first bike onto the rack.

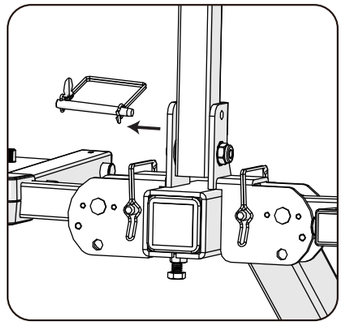

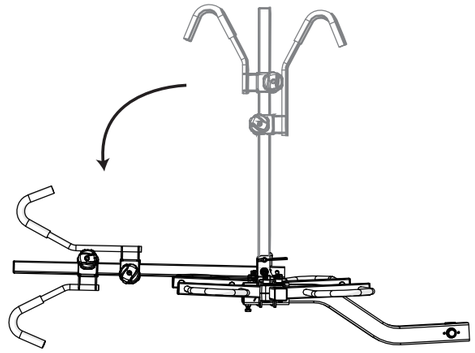

Step 10 : Installation complete.

Please Note: Make sure the hooks on the main, vertical post are pressed down onto the top tube of each bike and are tightened and locked in place. (For Step-Thru bike models, install a top tube, hitch rack adapter to allow the rack to keep the bike secure.)

Finally, use the Safety Strap to secure the bikes to the rack. Wrap the Safety Strap around each bike's frame and then around the base of the rack, as shown. Tighten the strap against the metal buckle to secure it in place.

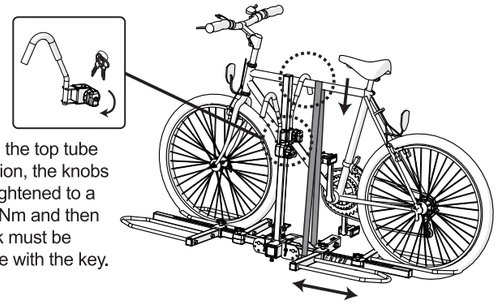

After securing the top tube hooks in position, the knobs should be retightened to a minimum of 5Nm and then the short hook must be locked in place with the key.

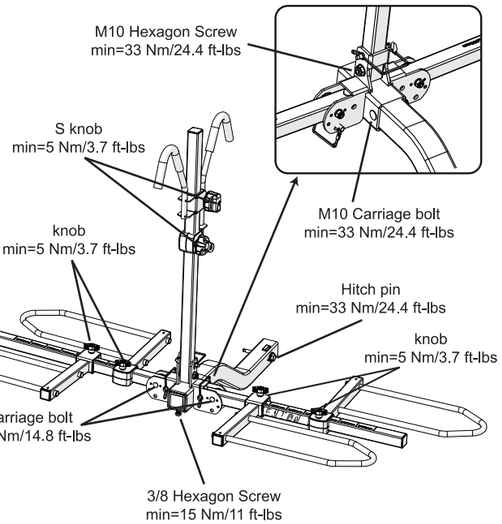

Apply the correct torque during assembly with proper tools as specified in the manual. Maintain minimum torque at all times. Re-tighten if necessary. Consult a professional assembler if needed.

Warning :

A Safety Strap is required when a bike is on the rack during transportation.

- The bike frame top tube adapter is required for Step-Thru frame designs. Model ABR002 "Hitch Rack Adapter" (purchased separately)
- Please check all knobs and tighten them regularly every 300miles/500kms to keep them at a minimum torque of 5Nm, as shown in the top right diagram.
- Failure to comply may result in damage or serious injury.

FOLDING FUNCTION

Pull out the safety pin and insert it into the lower hole so that the lateral square tubing on each side can be folded up into the vertical position. Ensure the posts are secured in the upright position with the safety pin on each side.

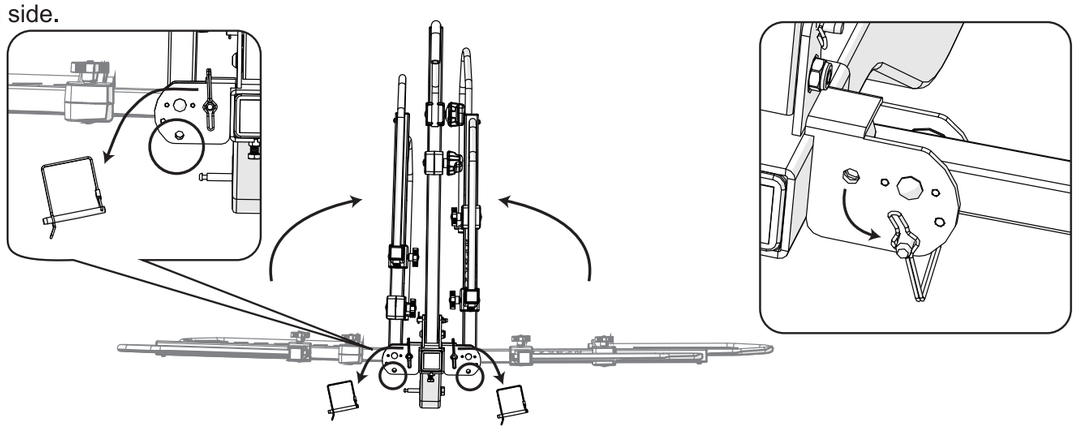

AVENTON

Model: ABR001RV

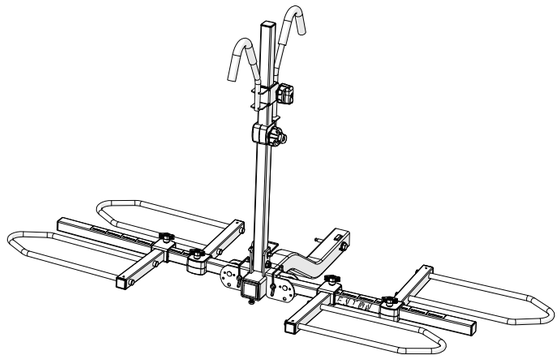

RV rated Ebike hitch rack
(class 3 or higher hitch must be chassis mounted)

Before use, thoroughly read the instruction manual for proper assembly and usage guidelines.

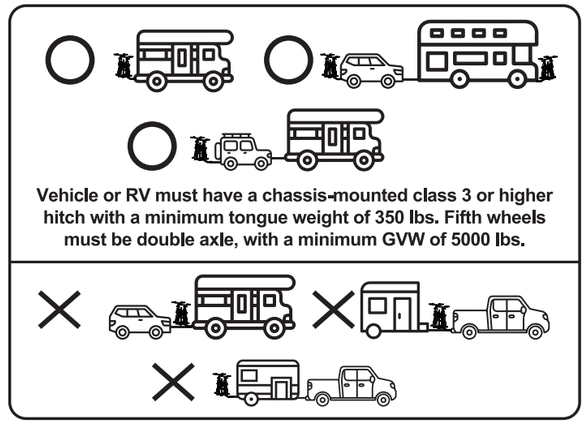

PARTS

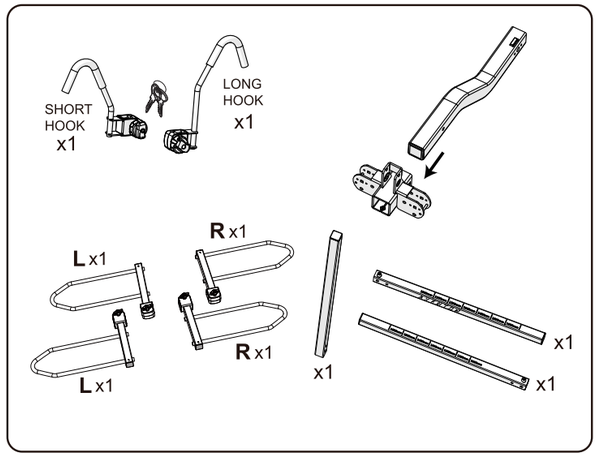

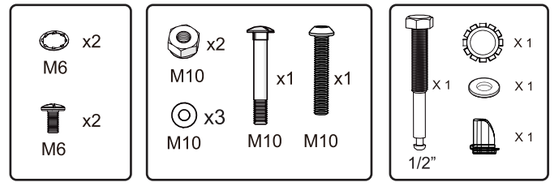

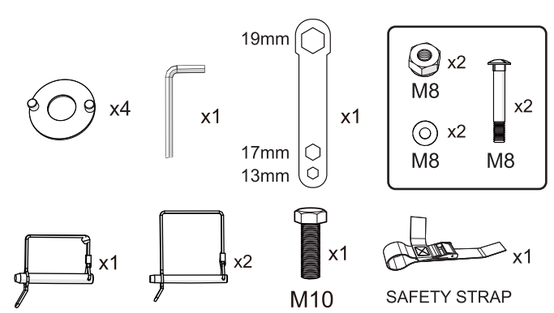

ASSEMBLY AND INSTALLATION

Step 1 : Slide the hitch tube into the 2" hitch receiver and secure it in place with the safety bolt, lock washer, flat washer, and lock. Tighten the bolt to a torque of 33Nm and then install the lock.

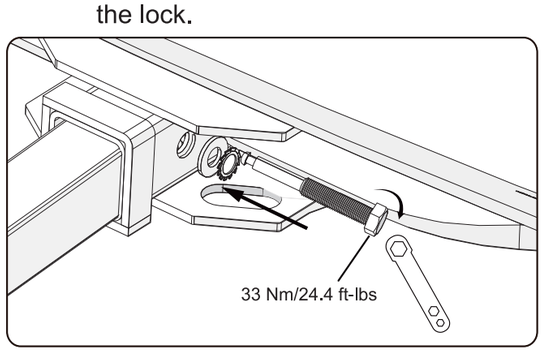

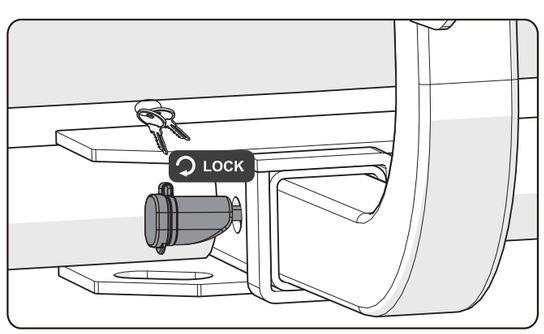

- Please Note! Insert the safety bolt from the RIGHT side, as shown in the photo. Make sure the Anti-Wobble mechanism is functioning when the safety bolt is tightened.

Step 2 : Insert the hitch tube into the base beam, as shown. Install the M10 carriage bolt from the right side and install a washer and nut on the opposite side. Torque the nut to 33Nm.

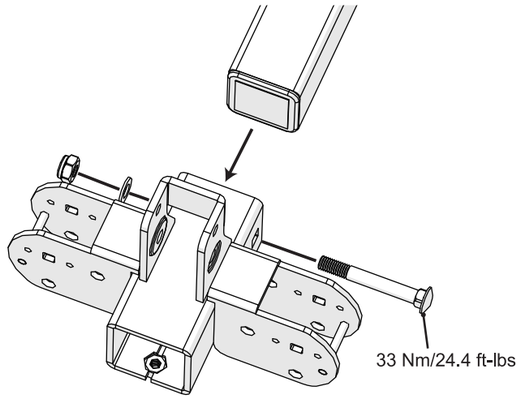

Step 3 : Thread the M10 bolt into the hole on the bottom of the base beam to stabilize the hitch tube. Torque the bolt to 15Nm.

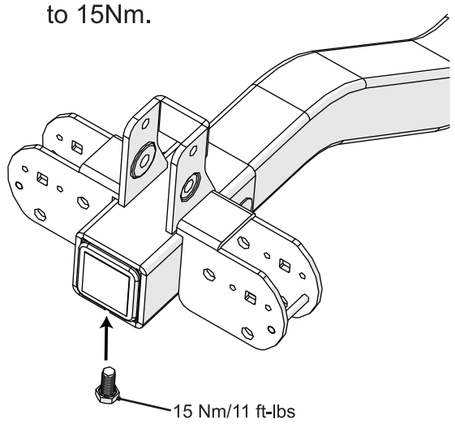

Step 4 : Insert the main, vertical post into the base beam. Install a washer onto the M10 bolt. Thread in the M10 bolt from the left side and install another washer on the opposite side, followed by the locking nut. Torque to 33Nm. Insert and latch the single, small safety pin through the base and vertical post, as shown in the figure below.

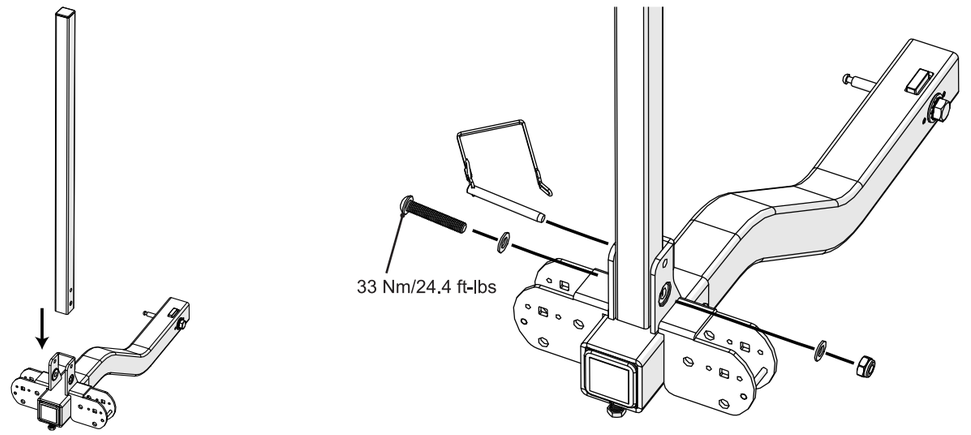

Step 5 : Install the double set of tabbed washers into the holes on both sides of the base beam, as shown. Insert the two lateral tubes into the base beam on each side. While retaining the tabbed washers in place, install an M8 carriage bolt from the front end, through the base and the lateral tube on each side. Install a washer and lock nut on the back side of both carriage bolts and torque them to 20Nm.
Insert and latch the two large safety pins (3) through the base and the lateral tubes on each side, as shown in the figure below.

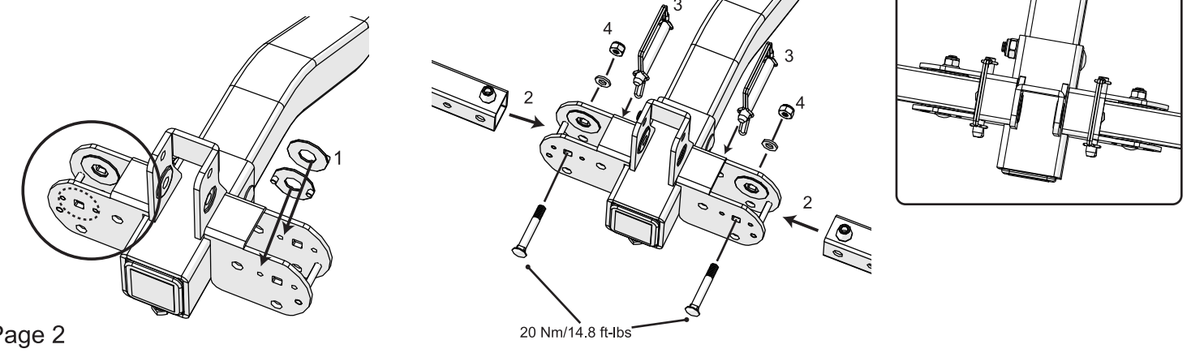

Step 6 : Loosen the knobs of wheel holders and slide them onto the lateral tubes.

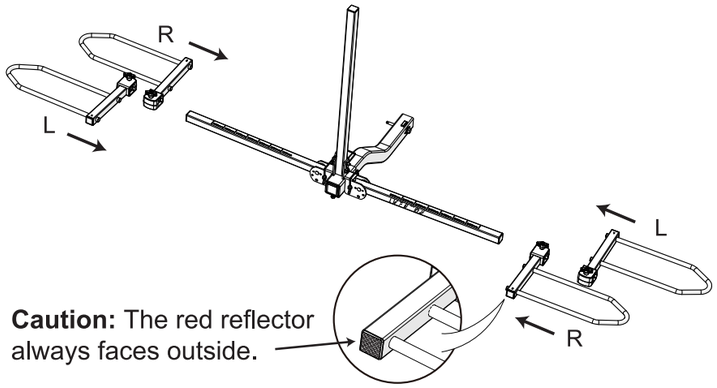

Caution: The red reflector always faces outside.

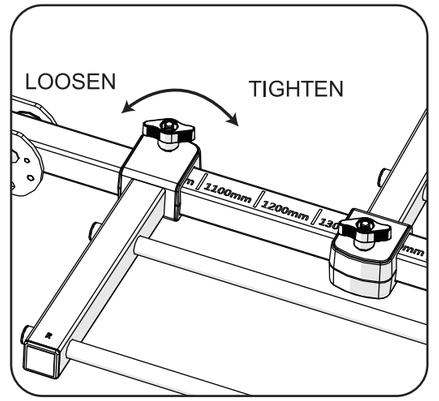

Step 7 : Install an M6 Phillips head screw and washer at the end of each lateral tube to prevent the wheel holder from sliding off the end.

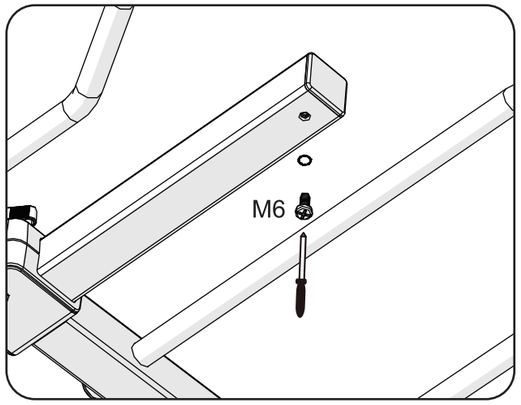

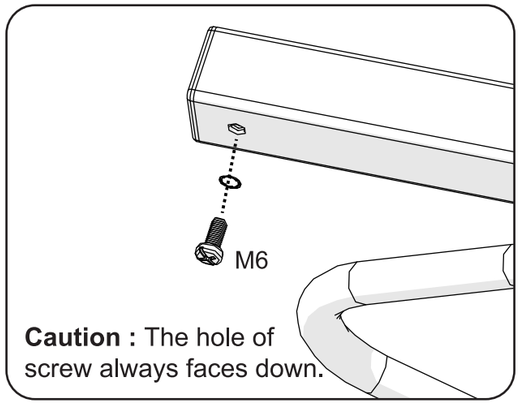

Caution : The hole of screw always faces down.

Step 8 : Loosen the knobs of each hook and slide them onto the main, vertical post.
Please Note: The long hook must be installed first and the short hook with the locking knob should be installed second. Use the key to lock the top, short hook when the bikes are loaded onto the rack.

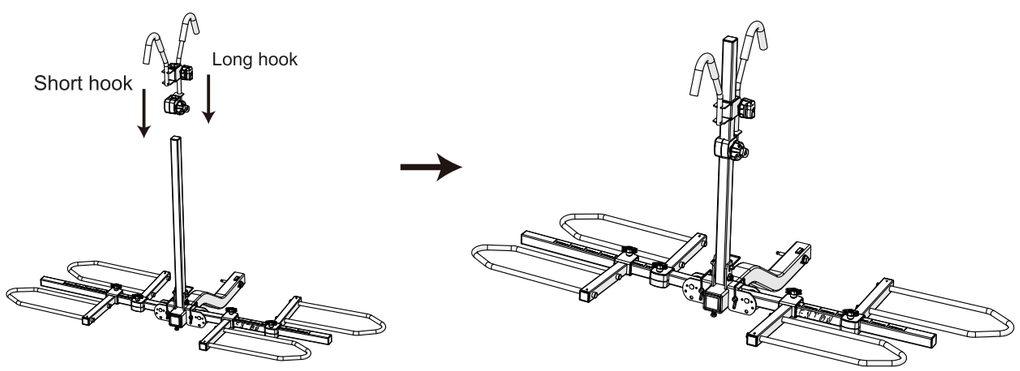

■ If only one bike is loaded onto the rack, use the short hook with the lock to secure the single bike.