AROMA®




# instruction manual

ARC-904SB

## Rice & Grain Cooker

*Questions or concerns about your Aroma product?*
**www.AromaCo.com/Support**
**1-800-276-6286**

**DISCOVER more of our products!**



Digital Rice & Grain Multicookers



Rice & Grain Cookers



Electric Kettles



Indoor Grills



...and More!

# AROMA®

To Enhance and Enrich Lives.

Here at Aroma we strive to make a difference—to design and distribute products that enhance and enrich people's lives.

Aroma offers an array of exceptional products to make cooking simple and satisfying. Discover other countertop appliances and cookware from our current product lineup to complement your kitchen.

## REGISTER YOUR PRODUCT

**Registration is quick and easy.**

Be notified of:
- new product releases
- new test kitchen recipes
- sales and promotions

...and more!

SCAN TO REGISTER
**AromaCo.com/registration**

**/AromaHousewares**

**Published By:**
Aroma Housewares Co. | 6469 Flanders Drive, San Diego, CA 92121, U.S.A.
**1-800-276-6286 | www.AromaCo.com**
©2025 Aroma Housewares Company | All rights reserved.

# IMPORTANT SAFEGUARDS

**Basic safety precautions should always be followed when using electrical appliances, including the following:**

1. **Important: Read all instructions carefully before first use.**
2. Do not touch hot surfaces. Use the handles or knobs.
3. Use only on a level, dry and heat-resistant surface.
4. To protect against electrical shock, do not immerse cord, plug or the appliance in water or any other liquid. See instructions for cleaning.
5. Close supervision is necessary when the appliance is used by or near children.
6. Unplug from outlet when not in use and before cleaning. Allow the unit to cool before putting on or taking off parts and before cleaning the appliance.
7. Do not operate any appliance with a damaged cord or plug or after the appliance malfunctions or has been damaged in any manner. Contact Aroma® customer service for examination, repair or adjustment.
8. The use of accessory attachments not recommended by Aroma® Housewares may result in fire, electrical shock or injury.
9. Do not use outdoors.
10. Do not let the power cord touch hot surfaces or hang over the edge of a counter or table.
11. Do not place the appliance on or near a hot gas or electric burner or in a heated oven.
12. Do not use appliance for other than intended use.
13. Extreme caution must be used when moving the appliance containing rice or liquids.
14. Do not touch, cover or obstruct the steam vent on the top of the appliance as it is extremely hot and may cause scalding.
15. Use only with a 120V AC power outlet.
16. Always unplug from the plug gripping area. Never pull on the cord.
17. The appliance should be operated on a separate electrical circuit from other operating appliances. If the electrical circuit is overloaded with other appliances, the appliance may not operate properly.
18. Always make sure the outside of the inner pot is dry prior to use. If the inner pot is returned to the appliance when wet, it may damage or cause the product to malfunction.
19. Use extreme caution when opening the lid during or after cooking. Hot steam will escape and may cause scalding.
20. Food should not be left in the inner pot with the ***Warm*** function on for more than 12 hours.
21. To prevent damage or deformation, never use the inner pot on a stovetop or burner.
22. To disconnect, flip the cook switch to ***Warm*** then remove the plug from the wall outlet.
23. **CAUTION:** To reduce the risk of electrical shock, cook only in the removable inner pot provided.
24. Do not wrap or tie around the appliance.
25. **CAUTION:** Intended for countertop use only.
26. To avoid spills and burns, do not carry the appliance by the lid handle.
27. **CAUTION:** Do not use for deep frying.
28. **WARNING:** Spilled food can cause serious burns. Keep appliance and power cord away from children. Never drape cord over edge of counter, never use outlet below counter, and never use with an extension cord.

# SAVE THESE INSTRUCTIONS

# IMPORTANT SAFEGUARDS

## Short Cord Instructions

A short power-supply cord is used to reduce the risks resulting from it being grabbed by children, becoming entangled in, or tripping over a longer cord.

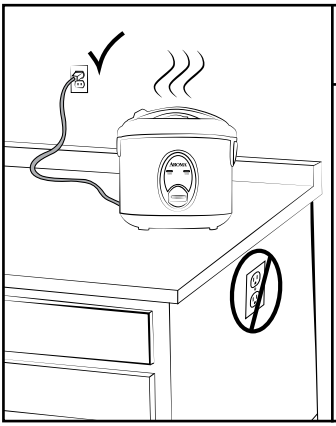

### WARNING

Spilled food can cause serious burns.

Keep appliance & cord away from children.

**NEVER**

- Drape cord over edge of counter.
- Use outlet below counter.
- Use extension cord.

## Polarized Plug

This appliance has a polarized plug (one blade is wider than the other); follow the instructions below:

To reduce the risk of electric shock, this plug is intended to fit into a polarized outlet only one way. If the plug does not fit fully into the outlet, reverse the plug. If it still does not fit, contact a qualified electrician. Do not attempt to modify the plug in any way.

If the supply cord is damaged, it must be replaced by the manufacturer, its service agent or a similarly qualified person in order to avoid a hazard.

# THIS APPLIANCE IS FOR HOUSEHOLD USE ONLY.

# Parts Identification

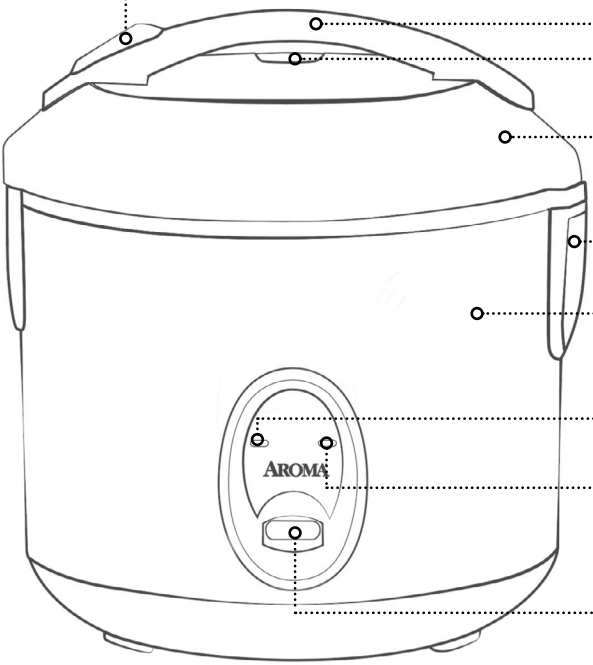


Lid Release Button
Lid Handle
Steam Vent
Lid
Condensation Collector
Stainless Steel Body
Warm Indicator Light
Cook Indicator Light
Cook Switch

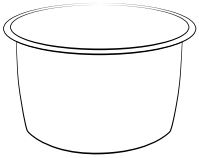

*Corecoat™ Ceramic Coated Inner Pot*

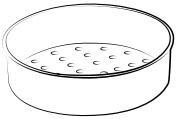

*Steam Tray*



*Removable Inner Lid*



*Serving Spatula*



*Rice Measuring Cup*

## Controls/Functions

### Cook

Simply press the cook switch down to begin cooking food.

### Warm

Automatically switches to ***Warm*** at the end of the cooking cycle; perfect for keeping food at a ready-to-serve temperature.

# Before First Use

1. Read all instructions and important safeguards.
2. Remove all packaging materials and check that all items have been received in good condition.
3. Tear up all plastic bags and dispose of them properly as they can pose a risk to children.
4. Remove the inner pot from the cooker and clean with warm, soapy water. Rinse and dry thoroughly before returning to the cooker.
5. Wash all accessories in warm, soapy water. Rinse and dry thoroughly.
6. Wipe the cooker's body clean with a damp cloth.
7. Dry all parts thoroughly then assemble for use.

.....

# To Clean

1. Remove the inner pot when the cooker has completely cooled.
2. Hand wash the inner pot and all accessories using warm, soapy water or place on the top rack of the dishwasher.
3. Remove the inner lid by pressing down on the white silicone support pin in the center while pulling the sides of the inner lid out towards you.
4. Hand wash the inner lid using warm, soapy water then wipe the inner surface of the lid with a damp cloth.
5. Remove the condensation collector and hand wash using warm, soapy water.
6. Wipe the cooker's body clean with a damp cloth.
7. Thoroughly dry the cooker's body and all accessories. Reassemble for next use.

.....

## Caution:

Do not use harsh abrasive cleaners, scouring pads or products that are not considered safe to use on ceramic coatings.

We recommend hand washing the inner pot with warm, soapy water to lengthen its lifespan and avoid damage over time. If washing in a dishwasher, a slight discoloration to the inner pot may occur. This is cosmetic and will not negatively affect performance.

Before placing the inner pot into the cooker, check that the inner pot is dry and free of debris. Adding the inner pot when wet may damage the cooker.

## Note:

- To remove the condensation collector, squeeze both sides and pull out towards you.
- Do not remove silicone seal ring on lid.



# TROUBLESHOOTING

***Rice is too dry/hard after cooking.***

- Depending on how dry your rice is, add ½ to 1 cup of water and stir thoroughly. Close the lid and press the ***Cook*** switch down once more. When the cooker switches to ***Keep Warm*** mode, open the lid and stir the rice to check the consistency. Repeat as necessary until rice is soft and moist.

***Rice is too moist/soggy after cooking.***

- Use the serving spatula to stir the rice to redistribute the bottom (moist) part of the rice and to release excess moisture. Close the lid and allow the cooker to remain on ***Keep Warm*** for 10-30 minutes as needed, opening the lid and stirring periodically to release excess moisture.

## Note:

- Any other servicing should be performed by Aroma® Housewares.
- Not satisfied with your Aroma® purchase? Our product experts can help! **Before returning, please contact Customer Service at 1-800-276-6286** for product support, helpful tips and more!

## Helpful Hints:

The provided rice cooker cup is the equivalent to a 3/4 standard US cup.

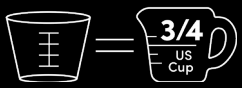

# RICE & GRAIN

1. Using the provided measuring cup, add rice to the inner pot.
2. For white or brown rice, rinse for 10 seconds and drain the water. Repeat this process at least 2 times, or until the water runs clear. For other grains, see the package instructions.
3. Fill the inner pot with water to the line that matches the number of cups of uncooked rice added.
4. Place the inner pot into the cooker and close the lid securely.
5. Plug the power cord into an available 120V AC wall outlet.
6. Press the ***Cook*** switch down to begin cooking.
7. The ***Cook*** indicator light will illuminate as the rice cooker begins cooking the rice.
8. Once the cycle has completed, the ***Cook*** switch will automatically flip up and switch into ***Warm*** mode.
9. For better results, stir the rice with the serving spatula to distribute any remaining moisture.
10. When finished serving, turn the cooker off by unplugging the power cord.



## Caution:

Before placing the inner pot into the cooker, check that it is dry and free of debris. Adding the inner pot when wet may damage the cooker.

## Note:

- Because rice varieties may vary in their make-up, results may differ.
- Food should not be left in the cooker on Keep Warm for more than 12 hours.
- For best results, we recommend rinsing rice and grains in a bowl of water before cooking. Avoid using a strainer or colander, which may not be as effective in removing excess starch and may affect the final texture.

## Helpful Hints:

To add more flavor to rice, try substituting a favorite meat or vegetable broth or stock. The ratio of broth/stock to rice will be the same as water to rice.

For approximate rice cooking times and suggested water ratios, see the "Rice & Water Measurement Table" on page **9**.

# *Rice/Grain & Water*
## *Measurement Tables*

| **Uncooked Rice*** | **Water:** *Using the Water Line (inside pot)* | **Approx. Cooked Rice Yield*** | **Cooking Times** |
|---|---|---|---|
| 1 Rice Cup | **White Rice:** Line 1<br>**Brown Rice:** Line 1 | 2 Rice Cups | **White Rice:** 15-20 Min.<br>**Brown Rice:** 38-43 Min. |
| 2 Rice Cups | **White Rice:** Line 2<br>**Brown Rice:** Line 2 | 4 Rice Cups | **White Rice:** 19-24 Min.<br>**Brown Rice:** 42-47 Min. |
| 3 Rice Cups | **White Rice:** Line 3<br>**Brown Rice:** Line 3 | 6 Rice Cups | **White Rice:** 22-27 Min.<br>**Brown Rice:** 45-50 Min. |
| 4 Rice Cups | **White Rice:** Line 4<br>**Brown Rice:** -- | **White Rice:** 8 Rice Cups<br>**Brown Rice:** -- | **White Rice:** 26-31 Min.<br>**Brown Rice:** -- |

| **Grain** | **Uncooked Grain** | **Liquid** | **Approx. Cooked Grain Yield** | **Max Uncooked Grain*** | **Cooking Times** |
|---|---|---|---|---|---|
| **Quinoa** | 1 Part | 1½ Parts | 2½ Parts | 4 Cups | 29-46 Minutes |
| **Arborio** | 1 Part | 2 Parts | 2 Parts | 2 Cups | 12-17 Minutes |
| **Barley** | 1 Part | 2 Parts | 2½ Parts | 1 Cup | 55-64 Minutes |
| **Bulgur** | 1 Part | 2 Parts | 2½ Parts | 1 Cup | 50-65 Minutes |
| **Couscous** | 1 Part | 1 Part | 2 Parts | 3 Cups | 22-26 Minutes |
| **Rolled Oats** | 1 Part | 2 Parts | 2 Parts | 1 Cup | 25-33 Minutes |
| **Steel Cut Oats** | 1 Part | 2½ Parts | 2 Parts | 1½ Cups | 28-39 Minutes |

*Cups referenced are with the included rice measuring cup
(1 Rice Measuring Cup = ¾ U.S. Cup)

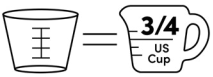


# Note:

- **Maximum Capacity: 4 cups of uncooked white rice (3 cups of brown rice),** yielding 8 cups of cooked white rice (6 cups of brown rice).
- **Minimum Capacity: 1 cup of uncooked white or brown rice.**
- Cooking times are approximate. Altitude, humidity, and external temperature will affect cooking time.
- Rinse grains before placing into the inner pot to remove excess bran and starch. This will reduce the chance of rice browning and sticking to the bottom of the inner pot.
- Brown rice takes longer to cook and requires more water than white rice due to the extra bran layers on the grains.

# STEAM

1. Using the provided measuring cup, add 2 cups of water to the inner pot.
2. Place the inner pot into the cooker.
3. Place desired food to be steamed in the provided steam tray, place the tray into the rice cooker, then close the lid securely.
4. Plug the power cord into an available 120V AC outlet.
5. Press the ***Cook*** switch down to begin.
6. The ***Cook*** indicator light will illuminate as the rice cooker begins to heat.
7. Check if food is completely cooked. Flip switch to ***Warm*** when it reaches desired results.
8. If finished steaming, remove food immediately to avoid overcooking. Use a protective, heat-resistant glove when removing to avoid possible injury.
9. When finished serving, turn the cooker off by unplugging the power cord.

## Note:

- Food should not be left in the rice cooker on ***Keep Warm*** for more than 12 hours.
- For best results when steaming, use 2 cups of water with the provided measuring cup.

## Helpful Hints:

If you misplace the measuring cup, a ¾ standard U.S. cup is an exact replacement.

Smaller foods may be placed on a heat-resistant dish and then placed onto the steam tray. Parchment paper or aluminum foil may be used as well. Place the paper/foil in the center of the steam tray and ensure it does not create a seal along the bottom of the steam tray. For best results, it is recommended to puncture small holes in the paper/foil.

# Steam & Cook

1. Follow steps 1 through 3 of "Rice & Grain" on page **8** to measure, rinse, and add rice or grain to the inner pot.
2. Place the inner pot into the cooker.
3. Place the desired food into the provided steam tray. Lower the steam tray into the cooker, then close the lid securely.
4. Plug the power cord into a 120V AC wall outlet.
5. Press the ***Cook*** switch down to turn the cooker on.
6. The ***Cook*** indicator light will illuminate as the cooker begins to heat.
7. Once the cooking cycle has completed, the cooker will beep and automatically switch to ***Warm*** mode.
8. Carefully open the lid and check steamed food for doneness.
9. Remove the steam tray. Wear a protective heat-resistant glove to prevent injury, as the steam tray will be hot.
10. When finished serving, turn off the cooker by unplugging the power cord.



## Caution:

Do not attempt to cook more than 2 cups of uncooked rice when steaming and cooking simultaneously.

The rice cooker will not switch to ***Warm*** mode until all liquid has evaporated. Follow your recipe carefully and do not leave the rice cooker unattended.

## Note:

- Delicate foods (e.g., leafy vegetables) might overcook if steamed for the entire rice cooking cycle.
- Dense foods (e.g., potatoes, corn, pumpkin, fish in foil) may not fully cook during the rice cycle. Cut into smaller pieces or reduce the quantity for even cooking. If needed, remove the rice and see page **10** to continue steaming separately using the Steam function.

# Steaming Tables

## Meat Steaming Table

| Meat | Steaming Time | Safe Internal Temperature |
|---|---|---|
| Fish | 25 Min. | 140°F |
| Chicken | 30 Min. | 165°F |
| Pork | 30 Min. | 160°F |
| Beef | Medium = 25 Min.<br>Medium-Well = 30 Min.<br>Well = 33 Min. | 160°F |

## Vegetable Steaming Table

| Vegetable | Steaming Time |
|---|---|
| Asparagus | 13 Minutes |
| Broccoli | 13 Minutes |
| Cabbage | 10 Minutes |
| Carrots | 12 Minutes |
| Cauliflower | 13 Minutes |
| Corn on the Cob | 25 Minutes |
| Green Beans | 10 Minutes |
| Peas | 15 Minutes |
| Potato | 30 Minutes |
| Spinach | 5 Minutes |
| Squash | 12 Minutes |
| Zucchini | 12 Minutes |

* When steaming, Aroma® recommends using 2 cups of water with the provided measuring cup.

## Helpful Hints:

Since most vegetables only absorb a small amount of water, there is no need to increase the amount of water with a larger serving of vegetables.

Steaming times may vary depending upon the cut of meat being used.

To ensure meat tastes its best, and to prevent possible illness, check that meat is completely cooked prior to serving. If it is not, simply place more water in the inner pot and repeat the cooking process until the meat is adequately cooked.

## Note:

- Altitude, humidity and outside temperature will affect cooking times.
- These steaming charts are for reference only. Actual cooking times may vary.

# Soup

1. Add desired ingredients to the inner pot.
2. Place the inner pot into the cooker and close the lid securely.
3. Plug the power cord into an available 120V AC wall outlet.
4. Press the ***Cook*** switch down to begin cooking. The ***Cook*** indicator light will illuminate as the rice cooker begins to heat.
5. Open the lid occasionally to stir with a long-handled wooden spoon or heat-safe utensil. Use caution to avoid escaping steam when opening the lid.
6. Once soup is done, press the cook switch up to set the rice cooker to ***Warm*** mode.
7. When finished serving, turn the cooker off by unplugging the power cord.

.....



## Caution:

The cooker will not switch to ***Keep Warm*** mode until all liquid has evaporated. Follow your recipe carefully and do not leave the rice cooker unattended.

**Do not use the provided serving spatula to stir soup, chili or stew. It is not intended to be used in contact with high temperatures.** Instead, use a long-handled wooden or heat-safe spoon to stir hot liquids.

# Oatmeal

1. Using the provided rice measuring cup, add oatmeal to the inner pot.
2. Fill the inner pot with water according to packaging instructions. When an oatmeal to water ratio is not available, use a ratio of 1:2 for rolled oat and 1:2.5 for steel cut.
3. Place the inner pot into the cooker, gently stir, and close the lid securely.
4. Plug the power cord into an available 120V AC outlet.
5. Press the ***Cook*** switch down. The ***Cook*** indicator light will illuminate as the cooker begins to heating.
6. Once oatmeal is ready, the cook switch will automatically flip up and the cooker will switch to ***Warm***.
7. For best results, stir the oatmeal with the serving spatula to distribute any remaining moisture.
8. When finished serving, turn the cooker off by unplugging the power cord.

.....



## Caution:

Follow your recipe carefully and do not leave the cooker unattended.

Do not attempt to cook more than 1 cup of oatmeal in this appliance at one time.

The cooker will not switch to ***Warm*** mode until all liquid has evaporated.

# NOTES

## LOOKING FOR RECIPES?

SCAN TO VISIT
**AromaCo.com/recipes**

**Visit the Aroma® blog to browse our collection of:**

- delicious recipes
- helpful how-to's
- product FAQs

**...and more!**

# Limited Warranty

Aroma Housewares Company warrants its products against defects in material and workmanship for one year from the date the customer takes possession of the product in the United States. For in-store purchases, this is the purchase date. For online or delivery orders, this is the delivery date.

Within this warranty period, Aroma Housewares Company will repair or replace, at its discretion, defective parts at no charge. Proof of the date of purchase, such as the original dated sales receipt, will be required with any request for warranty repair or replacement. All liability is limited to the amount of the purchase price.

This warranty does not apply if the warranty period expired; the product has been modified by any unauthorized service center or personnel; the defect was subject to abuse, improper use not conforming to product manual instructions, or environmental conditions more severe than those specified in the manual and specification, neglect of the owner or improper installation; the defect was subject to Force Majeure such as flood, fire, lightning, earthquake, other natural calamities, war. The warranty excludes accessories and replacement parts. This warranty is void if the product is used for other than single-family household use or subjected to any voltage and waveform other than as specified on the rating label (e.g., 120V ~ 60Hz).

Aroma's sole obligation under the warranty shall be to replace the defective product with a working one or a similar model of equivalent value, if the same model is not available, in the occurrence of any failure or defect covered under the warranty during the warranty period. Refurbished items or items not purchased through an authorized retailer are not eligible for warranty claims. Transportation charges on parts, or products in whole, submitted for repair or replacement, under this warranty, must be borne by the purchaser.

This warranty gives you specific legal rights, which may vary from state to state, and does not cover areas outside the United States.

## Note:

- Proof of purchase is required for all warranty claims.
- Failure to register your product will not diminish your warranty rights.
- Not satisfied with your Aroma® purchase? Our product experts can help! **Before returning, please contact Customer Service at 1-800-276-6286** for product support, helpful tips and more!

# Service & Support

In the event of a warranty claim, or if service is required for this product, please contact Aroma® customer service toll-free at:

**1-800-276-6286** | **CustomerService@AromaCo.com**
M-F, 8:00am-4:00pm, Pacific Time

**www.AromaCo.com**

Aroma Housewares Company
6469 Flanders Drive, San Diego, CA 92121, U.S.A.




To Enhance and Enrich Lives.

www.AromaCo.com