AROMA®
PROFESSIONAL



instruction manual

ARC-1250W

Rice & Grain Multicooker

Questions or concerns about your Aroma product?
www.AromaCo.com/Support
1-800-276-6286

DISCOVER more of our products!



Digital Rice & Grain Multicookers



Rice & Grain Cookers



Electric Kettles



Indoor Grills



...and More!

AROMA®

To Enhance and Enrich Lives.

Here at Aroma we strive to make a difference—to design and distribute products that enhance and enrich people's lives.

Aroma offers an array of exceptional products to make cooking simple and satisfying. Discover other countertop appliances and cookware from our current product lineup to complement your kitchen.

REGISTER YOUR PRODUCT

Registration is quick and easy.

Be notified of:
- new product releases
- new test kitchen recipes
- sales and promotions

...and more!

SCAN TO REGISTER
AromaCo.com/registration

/AromaHousewares

Published By:
Aroma Housewares Co. | 6469 Flanders Drive, San Diego, CA 92121, U.S.A.
1-800-276-6286 | www.AromaCo.com
©2024 Aroma Housewares Company | All rights reserved.

IMPORTANT SAFEGUARDS

Basic safety precautions should always be followed when using electrical appliances, including the following:

1. **Important: Read all instructions carefully before first use.**
2. Do not touch hot surfaces. Use the handles or knobs.
3. Use only on a level, dry and heat-resistant surface.
4. To protect against fire, electric shock and injury to persons, do not immerse the power cord, plug or the appliance in water or any other liquid. See instructions for cleaning.
5. Close supervision is necessary when the appliance is used by or near children.
6. Unplug from the outlet when not in use and before cleaning. Allow the unit to cool before putting on or taking off parts and before cleaning the appliance.
7. Do not operate any appliance with a damaged cord or plug or after the appliance malfunctions or has been damaged in any manner. Contact Aroma® customer service for examination, repair or adjustment.
8. The use of accessory attachments not recommended by Aroma® Housewares may result in fire, electrical shock or injury.
9. Do not use outdoors.
10. Do not let the power cord touch hot surfaces or hang over the edge of a counter or table.
11. Do not place on or near a hot gas or electric burner or in a heated oven.
12. Do not use the appliance for anything other than its intended use.
13. Extreme caution must be used when moving the appliance containing rice, hot oil or other liquids.
14. Do not touch, cover or obstruct the steam vent on the top of the appliance as it is extremely hot and may cause scalding.
15. Use only with a 120V AC power outlet.
16. Always unplug from the plug gripping area. Never pull on the cord.
17. The appliance should be operated on a separate electrical circuit from other operating appliances. If the electrical circuit is overloaded with other appliances, the appliance may not operate properly.
18. Always make sure the outside of the inner pot is dry prior to use. If the inner pot is returned to the appliance when wet, it may damage or cause the product to malfunction.
19. Use extreme caution when opening the lid during or after cooking. Hot steam will escape and may cause scalding.
20. Food should not be left in the inner pot with the ***Keep Warm*** function on for more than 24 hours.
21. To prevent damage or deformation, do not use the inner pot on a stovetop or burner.
22. To disconnect, turn any control to OFF, then remove the plug from the wall outlet. Always attach plug to appliance first, then plug into the wall outlet.
23. **CAUTION:** To reduce the risk of electrical shock, cook only in the removable inner pot provided.
24. Do not wrap or tie the power cord around the appliance.
25. **CAUTION:** Intended for countertop use only.
26. **WARNING:** Spilled food can cause serious burns. Keep the appliance and power cord away from children. Never drape the power cord over the edge of a counter, never use outlet below counter, and never use with an extension cord.
27. **CAUTION:** Do not use for deep frying.

SAVE THESE INSTRUCTIONS

IMPORTANT SAFEGUARDS

Short Cord Instructions

A short power-supply cord is provided to reduce the risks resulting from it being grabbed by children, and becoming entangled in or tripping over a longer cord.

DO NOT DRAPE CORD!

KEEP AWAY FROM CHILDREN!

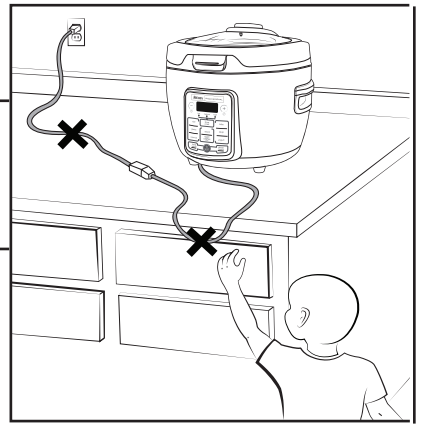

Polarized Plug

This appliance has a polarized plug (one blade is wider than the other); follow the instructions below:

To reduce the risk of electric shock, this plug is intended to fit into a polarized outlet only one way. If the plug does not fit fully into the outlet, reverse the plug. If it still does not fit, contact a qualified electrician. Do not attempt to modify the plug in any way.

If the supply cord is damaged, it must be replaced by the manufacturer, its service agent or a similarly qualified person in order to avoid a hazard.

THIS APPLIANCE IS FOR HOUSEHOLD USE ONLY.

Parts Identification

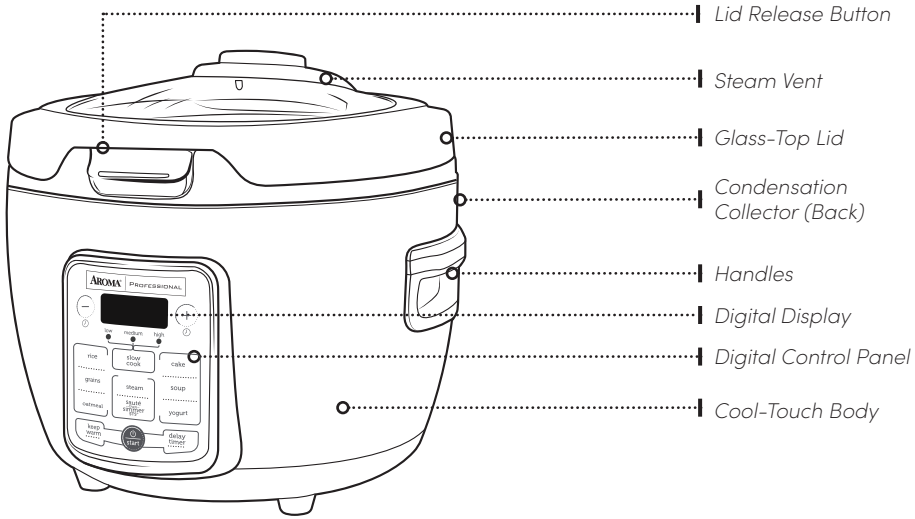



Bonded Granite® Nonstick Inner Pot

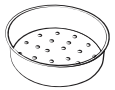

Steam Tray



Rice Measuring Cup



Serving Spatula

Digital Controls

Rice
Cooks fluffy, delicious white rice automatically.

Grains
Makes a variety of grains including quinoa, barley, couscous, brown rice and bulgur with ease.

Oatmeal
Prepares a quick and healthy breakfast with no need to stir or monitor.

Slow Cook
Prepare homemade roasts, stews and other slow-cooked favorites with an adjustable cook time of 2 to 10 hours.

Steam
Easily steams healthy sides and main courses using the included steam tray.

Cake
Easily bakes cakes and other sweet batter-based treats.

Soup
Simmers your favorite hot and hearty soups with an adjustable cook time of 2 to 8 hours.

Sauté-Then-Simmer STS®
Sautés foods on high heat then automatically switches to simmer mode once liquid is added. Great for risotto, Spanish rice, chili, stir-fries and much more!

Yogurt
A low-heat cooking cycle that prepares tasty yogurt in 6-12 hours.

Keep Warm
Manually sets the cooker to ***Keep Warm*** mode, perfect for keeping foods at ready-to-serve temperatures.

Delay Timer
Features an adjustable 1-15 hour countdown timer. Rice or grains will be cooked and ready for serving once the timer elapses.

(⏻)/Start
Powers the cooker on and off or cancels a current function.

Before First Use ⚠

1. **Read all instructions and important safeguards.**
2. Remove all packaging materials and check that all items have been received in good condition.
3. Tear up all plastic bags and dispose of them properly as they can pose a risk to children.
4. Remove the nonstick inner pot from the cooker and clean with warm, soapy water.
5. Wash all accessories in warm, soapy water.
6. Wipe the cooker's body clean with a damp cloth.
7. Dry all parts thoroughly then assemble for use.

To Clean

1. Remove the inner pot when the cooker has completely cooled.
2. Hand wash the inner pot and all accessories using warm, soapy water or place on the top rack of the dishwasher.
3. Remove the condensation collector and hand wash using warm, soapy water.
4. Wipe the cooker's body clean with a damp cloth.
5. Thoroughly dry the cooker's body and all accessories. Reassemble for next use.

Troubleshooting

Rice is too dry/hard after cooking.

- Depending on how dry your rice is, add ½ to 1 cup of water and stir thoroughly. Close the lid and select the ***Rice*** function once more. When the cooker switches to ***Keep Warm***, open the lid and stir the rice to check the consistency. Repeat as necessary until rice is soft and moist.

Rice is too moist/soggy after cooking.

- Use the serving spatula to stir the rice to redistribute the bottom (moist) part of the rice as well as release excess moisture. Close the lid and allow the cooker to remain on ***Keep Warm*** for 10-30 minutes as needed, opening the lid and stirring periodically to release excess moisture.

⚠

Caution:

Do not use harsh abrasive cleaners, scouring pads or products that are not considered safe to use on nonstick coatings.

We recommend hand washing the inner pot with warm, soapy water to lengthen its lifespan and avoid damage over time. If washing in a dishwasher, a slight discoloration to the inner pot may occur. This is cosmetic and will not negatively affect performance.

Before placing the inner pot into the cooker, check that the inner pot is dry and free of debris. Adding the inner pot when wet may damage the cooker.

Note:

- To remove the condensation collector, squeeze both sides and pull out towards you.
- Any other servicing should be performed by Aroma® Housewares.
- Not satisfied with your Aroma® purchase? Our product experts can help! **Before returning, please contact Customer Service at 1-800-276-6286** for product support, helpful tips and more!

Error Code Chart

If an error shows on the digital display, the following chart will help explain the next course of action.

Display Code	Action
E1	Turn off the rice cooker. Allow to cool for 2-5 min then restart. If problem persists, contact Customer Service: 1-800-276-6286
E2	Contact Customer Service: 1-800-276-6286

Rice & Grain

1. Measure rice or grain using the provided measuring cup. Overfill the cup slightly, then level it off at the brim of the cup for an accurate measurement.
2. Rinse measured rice in a bowl of water before adding to the inner pot. For rice, rinse for 10 seconds and drain the water. Repeat this process at least 2 times, or until the water runs clear. For other grains, see the package instructions.
3. Add rinsed rice to the inner pot. For white or brown rice, fill the inner pot with water to the line that matches the number of cups of uncooked rice added. For other grains, see "Grain & Water Measurement Table" on page **15**.
4. Place the inner pot into the cooker and close the lid securely.
5. Plug power cord into available 120V AC wall outlet.
6. Press **(⏻)/*Start*** to turn the cooker on.
7. Press ***Rice*** or ***Grains*** depending on the type of grain being cooked, then press **(⏻)/*Start***.
8. The cooking indicator light will illuminate and the digital display will show a chasing pattern as the cooker begins heating.
9. The digital display will count down the final 10 minutes of cook time.
10. Once the cycle has completed, the cooker will beep and automatically switch to ***Keep Warm***.
11. For best results, stir the grain with the serving spatula to distribute any remaining moisture.
12. When finished, turn the cooker off by pressing **(⏻)/*Start*** twice and unplug the power cord.

⚠

Caution:

During and after use, the inner pot will become extremely hot. Be sure to wear protective heat resistant oven mitts or gloves.

Note:

- Because rice varieties may vary in their make-up, results may differ.
- Food should not be left in the cooker on ***Keep Warm*** for more than 24 hours.
- For best results, we recommend rinsing rice and grains in a bowl of water before cooking. Avoid using a strainer or colander, which may not be as effective in removing excess starch and may affect the final texture.

Helpful Hints:

If you misplace the measuring cup, a ¾ standard U.S. cup is an exact replacement.

To add more flavor to rice, try substituting water for a favorite meat or vegetable broth or stock. The ratio of broth/stock to rice will be the same as water to rice.

For approximate rice cooking times and suggested rice/water ratios, see "Rice/Grain & Water Measurement Table" on page **15**.

Oatmeal

1. Using the provided rice measuring cup, add oatmeal to the inner pot.
2. Fill the inner pot with water. For steel-cut oats, fill with water to the line that matches the number of cups of oatmeal added. For rolled oats, use a 1:2 water-to-oat ratio.
3. Place the inner pot into the cooker and close the lid securely.
4. Plug the power cord into an available 120V AC outlet.
5. Press (⏻)/***Start*** to turn the cooker on.
6. Press ***Oatmeal***, then press (⏻)/***Start***. The cooking indicator light will illuminate and the digital display will show a chasing pattern as the cooker begins heating.
7. Once the cycle has completed, the cooker will beep and automatically switch to ***Keep Warm***.
8. When finished, turn the cooker off by pressing (⏻)/***Start*** twice and unplug the power cord.

Delay Timer

1. To use delay time for cooking rice or grain, begin by following steps 1 through 5 of "Rice & Grain" on page **7** or "Oatmeal" on page **8**.
2. Press the ***Rice***, ***Grains***, or ***Oatmeal*** button, depending on the type of grain being cooked, then press ***Delay Timer***.
3. Press ***(+)*** or ***(-)*** to increase or decrease the delay time by 30-minute increments. It may be set to have food ready in 1 to 15 hours for ***Rice*** or ***Oatmeal*** and 2 to 15 hours for ***Grains***.
4. Once the time has been selected, press (⏻)/***Start***.
5. The cooker will beep and the digital display will stop flashing to indicate that the time has been successfully set.
6. The cooker will begin counting down from the selected delay time. Once the cooking cycle starts, the digital display will switch to a chasing pattern.
7. The digital display will count down the final 10 minutes of cook time.
8. Once the cycle has completed, the cooker will beep and automatically switch to ***Keep Warm***.
9. When finished, turn the cooker off by pressing (⏻)/***Start*** twice and unplug the power cord.

Caution:

Do not attempt to cook more than 4 cups of oatmeal in this appliance at one time.

Note:

- Food should not be left in the cooker on ***Keep Warm*** for more than 24 hours.
- The delay timer includes cooking time. Once the delay timer elapses, rice or grains will be cooked and ready to serve.

Helpful Hints:

For approximate grain cooking times and suggested grain/water ratios, see "Rice/Grain & Water Measurement Table" on page **15.**

The provided rice measuring cup is equivalent to a ¾ standard U.S. cup.



Soup

1. Add desired ingredients to the inner pot.
2. Place the inner pot into the cooker and close the lid securely.
3. Plug the power cord into an available 120V AC wall outlet.
4. Press (⏻)/***Start*** to turn the cooker on.
5. Press ***Soup***. The digital display will show a flashing "2" to represent 2 hours of cook time.
6. Press ***(+)*** or ***(-)*** to increase or decrease time by 30-minute increments, up to 8 hours.
7. Once the time has been selected, press (⏻)/***Start***.
8. The cooker will beep and the digital display will stop flashing to indicate that the time has been successfully set.
9. The cooker will now begin heating. The digital display will count down in one minute increments from the input cook time after it reaches a boil.
10. If desired, carefully open the lid and stir the ingredients with a long-handled wooden or heat-safe utensil.
11. Once the time has elapsed, the cooker will beep and automatically switch to ***Keep Warm***.
12. When finished, turn the cooker off by pressing (⏻)/***Start*** twice and unplug the power cord.

Caution:

Do not use the provided serving spatula to stir ingredients while using the *Sauté-Then-Simmer®, Slow Cook, or Soup* functions. It is not intended to be used in contact with high temperatures. Instead, use a long-handled wooden or heat-safe utensil to stir while cooking.

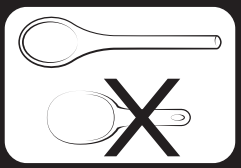

Steam

1. Using the provided rice measuring cup, add 3 cups of water to the inner pot.
2. Place the inner pot into the cooker.
3. Place desired food into the provided steam tray, lower the tray into the cooker then close the lid securely.
4. Plug the power cord into an available 120V AC outlet.
5. Press (⏻)/***Start*** to turn the cooker on.
6. Press ***Steam.*** The digital display will show a flashing "5" to represent five minutes of steam time.
7. Press ***(+)*** or ***(-)*** to increase or decrease steaming time by one minute increments, up to 30 minutes. For suggested steaming times for meat and vegetables, see "Meat & Vegetable Steaming Tables" on page **11**.
8. Once the desired time is selected, press (⏻)/***Start*** to begin the cooking cycle.
9. Once the water reaches a boil, the digital display will begin to count down from the input steam time.
10. After the selected steam time has elapsed, the cooker will beep and automatically switch to ***Keep Warm***.
11. Using caution, check to see that the steamed food is cooked. If finished steaming, carefully remove the food to prevent overcooking. Wear a protective heat-resistant glove to prevent injury as the steam tray will be hot.
12. When finished, turn the cooker off by pressing (⏻)/***Start*** twice and unplug the power cord.

Steam & Cook

1. To steam foods while cooking grains, begin cooking grain by following steps 1 through 7 of "Rice & Grain" on page **7**.
2. Place the desired food into the provided steam tray. Open the lid using caution, lower the steam tray into the cooker then close the lid securely.
3. Cook food according to "Meat & Vegetable Steaming Tables" on page **11**.

Caution:

Do not attempt to cook more than 6 cups of uncooked rice when steaming and cooking simultaneously.

Before placing the inner pot into the cooker, check that it is dry and free of debris. Adding the inner pot when wet may damage the cooker.

Helpful Hints:

Parchment paper or aluminum foil may also be used while steaming. Place the paper/foil in the center of the steam tray and ensure it does not create a seal along the bottom of the tray.

We recommend beginning to steam your foods towards the end of the rice cooking cycle. This will allow steamed food and cooked grains to be ready around the same time. See "Rice/Grain & Water Measurement Table" on page **15** for approximate cooking times.

Steam & Cook (CONT.)

4. After the suggested amount of time has elapsed, open the lid to check steamed food for doneness. Use caution when opening the lid as hot steam will escape.
5. If food is finished steaming, remove the steam tray. Wear a protective heat-resistant glove to prevent injury as the steam tray will be hot.
6. Close the lid securely and allow the cooking cycle to continue.
7. Once the cycle has completed, the cooker will beep and automatically switch to ***Keep Warm***.
8. When finished, turn the cooker off by pressing (⏻)/***Start*** twice and unplug the power cord.

Meat & Vegetable
Steaming Tables

Meat	Steaming Time	Safe Internal Temperature
Fish	25 Min.	140°F
Chicken	30 Min.	165°F
Pork	30 Min.	160°F
Beef	Medium= 25 Min. Medium-Well= 30 Min. Well= 33 Min.	160°F

Vegetable	Steaming Time
Asparagus	8-12 Minutes
Broccoli	10-15 Minutes
Cabbage	7-11 Minutes
Carrots	8-12 Minutes
Cauliflower	10-15 Minutes
Corn on the Cob	20-25 Minutes
Green Beans	9-13 Minutes
Peas	6-10 Minutes
Spinach	5 Minutes
Squash	8-12 Minutes
Zucchini	8-12 Minutes
Potatoes	25-30 Minutes

Helpful Hints:

Since most vegetables only absorb a small amount of water, there is no need to increase the amount of water with a larger serving of vegetables.

To ensure meat tastes its best and to prevent food-borne illness, check that the meat is completely cooked prior to serving. If the meat is still uncooked, simply add more water to the inner pot and repeat the steaming process until the meat is adequately cooked.

Note:

- Altitude, humidity and outside temperature will affect cooking times.
- These steaming charts are for reference only. Actual cooking times may vary.
- Food should not be left in the rice cooker on ***Keep Warm*** for more than 24 hours.
- When steaming, we recommend using 3 cups of water with the provided rice measuring cup.

Sauté-Then-Simmer®

1. Place the inner pot into the cooker.
2. Plug the power cord into an available 120V AC wall outlet.
3. Press **(⏻)/*Start*** to turn the cooker on.
4. Press ***Sauté-then-Simmer®***, then press **(⏻)/*Start***. The cooking indicator light will illuminate as the cooker begins to heat.
5. Add oil if desired for sautéing then close the lid securely and allow the inner pot to preheat for 2–4 minutes.
6. Once preheated, add in ingredients to sauté.
7. When finished sautéing, stir in any other desired ingredients including liquid and close the lid securely.
8. The cooker will automatically reduce its heat and switch to simmer mode once liquids are added.
9. Once all liquid has been evaporated, the cooker will beep and automatically switch to ***Keep Warm***.
10. When finished, turn the cooker off by pressing **(⏻)/*Start*** twice and unplug the power cord.

Slow Cook

1. Add desired ingredients to the inner pot.
2. Place the inner pot into the cooker and close the lid securely.
3. Plug the power cord into an available 120V AC wall outlet.
4. Press **(⏻)/*Start*** to turn the cooker on.
5. Press ***Slow Cook*** once for High, twice for Medium and three times for Low.
6. Press ***(-)*** or ***(+)*** to adjust cook time in 30-minute increments. Low time setting can be set 8–10 hours, Medium set 5–7 hours and High 2–4 hours.
7. Once the needed cooking time is selected, the cooker will beep to indicate it is setting at the displayed time. The display will stop flashing to indicate it has set.
8. The cooker will begin to slow cook. The digital display will count down in one minute increments from the selected time.

Caution:

Do not use the provided serving spatula to stir ingredients while using the *Sauté-Then-Simmer®*, *Slow Cook, or Soup* functions. It is not intended to be used in contact with high temperatures. Instead, use a long-handled wooden or heat-safe utensil to stir while cooking.

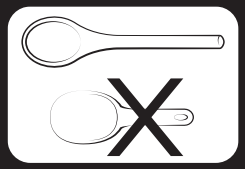

Slow Cook (CONT.)

9. Using caution, open the lid occasionally and stir the ingredients with a long-handled wooden or heat-safe spoon if desired.
10. Once the time has elapsed, the cooker will beep and automatically switch to ***Keep Warm***.
11. When finished, turn the cooker off by pressing **(⏻)/*Start*** twice and unplug the power cord.

Cake

1. Prepare one prepackaged cake mix according to the instructions or prepare your own cake batter.
2. Spray the interior of the inner pot with nonstick cooking spray.
3. Pour the cake mixture into the inner pot.
4. Place the inner pot into the cooker then close the lid securely.
5. Plug the power cord into an available 120V AC wall outlet.
6. Press **(⏻)/*Start*** to turn the cooker on.
7. Press ***Cake***, then press **(⏻)/*Start***. The cooking indicator light will illuminate as the cooker begins heating.
8. Once the cycle has completed, the cooker will beep and automatically switch to ***Keep Warm***.
9. When finished, turn the cooker off by pressing **(⏻)/*Start*** twice and unplug the power cord.

Yogurt

1. Add 8 cups of whole milk to the inner pot.
2. Place the inner pot into the cooker and close the lid securely.
3. Plug the power cord into an available 120V AC wall outlet.
4. Press **(⏻)/*Start*** to turn the cooker on.
5. Press ***Sauté-then-Simmer STS®*** and then **(⏻)/*Start*** to begin heating the milk to 180°F. The cooking indicator light will illuminate as the cooker begins to heat.

continued on the next page >>

Caution:

Do not attempt to cook more than one package of cake mix (15.25 oz.) in this appliance at one time.

Note:

- Food should not be left in the cooker on ***Keep Warm*** mode for more than 24 hours.

YOGURT (CONT.)

6. Using caution, open the lid and stir the milk every 5 minutes with a long-handled wooden or heat-safe utensil.
7. Monitor the temperature using a kitchen thermometer. Once the milk reaches 180°F (after about 25 minutes), press (⏻)/***Start*** to cancel the cooking process.
8. Using oven mitts, carefully remove the inner pot from the cooker and place on a heat-safe surface to cool. Allow the milk to cool to 115°F (approximately 30–45 minutes).
9. Once cooled, combine 1 cup of the milk with ½ cup yogurt or starter culture in a glass bowl and mix well. Add the mixture back into the inner pot and stir to combine.
10. Carefully place the inner pot back into the cooker, making sure that the exterior is clean and dry.
11. Press (⏻)/***Start*** to turn the cooker on.
12. Press ***Yogurt***. The digital display will show a flashing "8:00" to represent 8 hours of cook time. Press ***(+)*** or ***(-)*** to increase or decrease cook time by 30-minute increments, from 6–12 hours.
13. Once the time has been selected, press (⏻)/***Start***. The cooker will beep and the digital display will stop flashing to indicate that the time has been successfully set.
14. The cooker will now begin heating. The digital display will count down in one minute increments from the input cook time.
15. Once the time has elapsed, the cooker will beep and automatically switch to standby mode.
16. Pour off any liquid from the top or strain the yogurt using cheesecloth for a thicker consistency.
17. When finished, turn the cooker off by pressing (⏻)/***Start*** and unplug the power cord.
18. Store and refrigerate yogurt in an airtight container or transfer yogurt into small glass jars with lids as individual servings.

Note:

- Opening the lid during the cooking cycle causes a loss of heat and steam. Cooking time may be prolonged if the lid is opened before the food is finished.
- Cooking times are approximate. Altitude, humidity and outside temperature will affect cooking times.

Helpful Hints:

For best results, we recommend rinsing rice and grains in a bowl of water before cooking. Avoid using a strainer or colander, which may not be as effective in removing excess starch and may affect the final texture.

The provided rice measuring cup is equivalent to a ¾ standard U.S. cup.

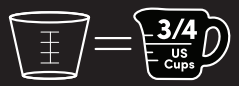

Rice & Water Measurement Table

Uncooked Rice*	Water: *Using the Water Line (inside pot)*	Water: *Using the Rice Measuring Cup**	Approx. Cooked Rice Yield*	Cooking Times
2 Cups	**White Rice:** Line 2 **Brown Rice:** Line 2	**White Rice:** 2⅓ Cups **Brown Rice:** 2⅓ Cups	4 Cups	**White Rice:** 30–35 Min. **Brown Rice:** 48–53 Min.
3 Cups	**White Rice:** Line 3 **Brown Rice:** Line 3	**White Rice:** 3⅓ Cups **Brown Rice:** 3⅓ Cups	6 Cups	**White Rice:** 32–37 Min. **Brown Rice:** 50–55 Min.
4 Cups	**White Rice:** Line 4 **Brown Rice:** Line 4	**White Rice:** 4⅓ Cups **Brown Rice:** 4⅓ Cups	8 Cups	**White Rice:** 34–39 Min. **Brown Rice:** 53–58 Min.
5 Cups	**White Rice:** Line 5 **Brown Rice:** Line 5	**White Rice:** 5⅓ Cups **Brown Rice:** 5⅓ Cups	10 Cups	**White Rice:** 36–41 Min. **Brown Rice:** 54–59 Min.
6 Cups	**White Rice:** Line 6 **Brown Rice:** Line 6	**White Rice:** 6⅓ Cups **Brown Rice:** 6⅓ Cups	12 Cups	**White Rice:** 38–43 Min. **Brown Rice:** 58–63 Min.
7 Cups	**White Rice:** Line 7 **Brown Rice:** Line 7	**White Rice:** 7⅓ Cups **Brown Rice:** 7⅓ Cups	14 Cups	**White Rice:** 40–45 Min. **Brown Rice:** 59–64 Min.
8 Cups	**White Rice:** Line 8 **Brown Rice:** Line 8	**White Rice:** 8⅓ Cups **Brown Rice:** 8⅓ Cups	16 Cups	**White Rice:** 42–47 Min. **Brown Rice:** 60–65 Min.
9 Cups	**White Rice:** Line 9 **Brown Rice:** Line 9	**White Rice:** 9⅓ Cups **Brown Rice:** 9⅓ Cups	18 Cups	**White Rice:** 44–49 Min. **Brown Rice:** 62–67 Min.
10 Cups	**White Rice:** Line 10 **Brown Rice:** Line 10	**White Rice:** 10⅓ Cups **Brown Rice:** 10⅓ Cups	20 Cups	**White Rice:** 45–50 Min. **Brown Rice:** 64–69 Min.

Grain & Water Measurement Table

Grain	Uncooked Grain	Liquid	Approx. Cooked Grain Yield	Max. Uncooked Grain*	Function	Cooking Times
Quinoa	1 Part	1⅓ Parts	2 Parts	7 Cups	Rice	32–48 Min.
Arborio	1 Part	2 Parts	2 Parts	5 Cups	Steam	12–17 Min.
Barley	1 Part	2 Parts	2½ Parts	2 Cups	Delay Timer & Grains	5 Hours
Bulgur	1 Part	2 Parts	2½ Parts	5 Cups	Grains	35–50 Min.
Couscous	1 Part	1 Part	2 Parts	7 Cups	Rice	22–44 Min.

Note:

- **Maximum Capacity: The maximum capacity of this unit is 10 cups of uncooked rice which yields 20 cups of cooked rice.**
- **Minimum Capacity: Do not attempt to cook less than 2 cups of uncooked rice.**
- When cooking barley, you must use the ***Delay Timer*** for 4 hours in combination with the ***Grains*** function. The additional soaking time will ensure optimal flavor and texture. For best results when cooking barley or bulgur, let both grains sit on ***Keep Warm*** for 10 minutes before serving.
- If softer grains are desired, add an additional ½ cup of water or liquid.

Jalapeño Quinoa with Shallots

1 tbsp.	extra virgin olive oil
1	small shallot, minced
1	garlic clove, minced
2	jalapeño peppers, minced
2 cups	quinoa, thoroughly rinsed
2½ cups	chicken broth

Add olive oil to the inner pot and select the ***Rice*** function. Once heated, add the shallot, garlic, and jalapeños. Close the lid and allow the ingredients to cook, stirring occasionally with a long-handled wooden spoon. Once the shallot has softened, stir in the quinoa and chicken broth. Close the lid and cook until the quinoa is done, about 25 to 30 minutes. Serve while warm.

SERVES 4.

One-Pot Pasta

2 cups	bow tie or penne pasta
2⅔ cups	chicken broth
1 cup	marinara sauce
1 cup	parmesan cheese
1 tsp.	olive oil
----	basil leaves, for garnish

Combine all ingredients except the cheese into the inner pot, ensuring they are evenly mixed. Close the lid and press ***Rice***. Allow to cook, opening the lid and stirring occasionally. When the cooker switches to ***Keep Warm***, open the lid and stir in the cheese until melted. Serve hot and garnish with basil leaves.

SERVES 4.

Pulled Pork

1 lb.	boneless pork loin
¼	yellow onion, sliced
2½ tbsp.	chili powder
4 oz.	BBQ sauce
¼ cup	water

Press ***Sauté-then-Simmer®*** and allow the inner pot to heat for 5 minutes. Place the pork loin into the hot inner pot and brown for 4-5 minutes per side. Add remaining ingredients to the inner pot and stir. Press ***Slow Cook (High)*** and set for 2 hours, or until the meat easily shreds. Serve on warm slider buns.

SERVES 4.

San Antonio Rice

2 cups	white rice
24 oz.	fresh salsa, mild or hot
2 tbsp.	vegetable oil
2 cups	corn kernels, fresh or canned
1 tsp.	ground cumin
1 tsp.	salt
2½ cups	water
----	fresh ground pepper, to taste
----	fresh minced cilantro, for garnish

Add all ingredients except the cilantro to the inner pot and stir. Close the lid and press ***Rice***. Once the rice cooker switches to ***Keep Warm***, carefully open the lid and stir. Allow to stand for 8-10 minutes before serving. Garnish with fresh cilantro and serve alone, or paired with grilled chicken or fish.

SERVES 4.

Notes

Limited Warranty

Aroma Housewares Company warrants its products against defects in material and workmanship for one year from the provable date of purchase in the United States.

Within this warranty period, Aroma Housewares Company will repair or replace, at its discretion, defective parts at no charge. Proof of the date of purchase, such as the original dated sales receipt, will be required with any request for warranty repair or replacement. All liability is limited to the amount of the purchase price.

This warranty does not apply if the warranty period expired; the product has been modified by any unauthorized service center or personnel; the defect was subject to abuse, improper use not conforming to product manual instructions, or environmental conditions more severe than those specified in the manual and specification, neglect of the owner or improper installation; the defect was subject to Force Majeure such as flood, fire, lightning, earthquake, other natural calamities, war. The warranty excludes accessories and replacement parts. This warranty is void if the product is used for other than single-family household use or subjected to any voltage and waveform other than as specified on the rating label (e.g., 120V ~ 60Hz).

Aroma's sole obligation under the warranty shall be to replace the defective product with a working one or a similar model of equivalent value, if the same model is not available, in the occurrence of any failure or defect covered under the warranty during the warranty period. Refurbished items or items not purchased through an authorized retailer are not eligible for warranty claims. Transportation charges on parts, or products in whole, submitted for repair or replacement, under this warranty, must be borne by the purchaser.

This warranty gives you specific legal rights, which may vary from state to state, and does not cover areas outside the United States.

Service & Support

In the event of a warranty claim, or if service is required for this product, please contact Aroma® customer service toll-free at:

1-800-276-6286 | **CustomerService@AromaCo.com**
M-F, 8:30am-4:30pm, Pacific Time

www.AromaCo.com

Aroma Housewares Company
6469 Flanders Drive, San Diego, CA 92121, U.S.A.

Note:

- Proof of purchase is required for all warranty claims.
- Failure to register your product will not diminish your warranty rights.
- Not satisfied with your Aroma® purchase? Our product experts can help! **Before returning, please contact Customer Service at 1-800-276-6286** for product support, helpful tips and more!



To Enhance and Enrich Lives.

www.AromaCo.com