Ultrasonic Humidifier

AROMA/sai

APPLIANCES FOR TODAY'S HEALTHY HOME

IONIC Humidifier™

AROMA/sai

INSTRUCTION AND WARRANTY BOOK



Healthy Appliance:
The Ionic Humidifier adds moisture-balanced air to help you breathe easier.

Ionic Generator:
This efficient air humidification technology uses high frequency vibration to generate a micro-fine cool mist. Ion setting helps eliminate dust particles in the air which can cause allergies and breathing problems.

Modern Design:
Attractive design will look great in any room of your home of office. Decorative lamps create soft illumination which can be used as a night light.

AHU-4002

Warranty and service location information is located on the inside back cover.

Ultrasonic Humidifier

AROMA/sai

Congratulations

Welcome to the growing number of families using clean air technology.

We believe our innovative series of appliances for today's healthy home will provide truly clean air, fresh ambiance and improved comfort. Your new appliance is designed to enhance your well-being with a Healthier Home Environment.

The Ionic Humidifier adds moisture-balanced air to help you breathe easier and relieves physical discomforts, such as dry, chapped lips, dry skin and sore throat. The Ionic Humidifier humidifies up to 900 square feet to restore your living or work space to healthier more pleasant humidity level with cool mist. It provides 12-14 hours of continuous use, while consuming only 25 watts of power.

APPLIANCES FOR TODAY`S HEALTHY HOME

Warranty Information

Limited Warranty

Aroma Housewares Company warrants this product free from defects in material and workmanship for 90 days from provable date of purchase in continental United States.

Within this warranty period, Aroma Housewares Company will repair or replace, at its option, defective parts at no charge, provided the product is returned, freight prepaid with proof of purchase and U.S. $8.00 for shipping and handling charges payable to Aroma Housewares Company. Before returning an item, please call the toll free number below for return authorization number. Allow 2-4 weeks for return shipping.

This warranty does not cover improper installation, misuse, abuse or neglect on the part of the owner. Warranty is also invalid in any case that the product is taken apart or serviced by an unauthorized service station.

This warranty gives you specific legal rights and which may vary from state to state and does not cover areas outside the United States.

AROMA HOUSEWARES COMPANY
6469 Flanders Drive
San Diego, California 92121
1-800-276-6286
M-F, 8:30 AM - 5:00 PM, Pacific Time
Website: www.aromaco.com

Operating and Cleaning Instructions

How to use:

• ***Always place this unit on a firm, flat and level surface.***
The humidifier may not work properly on uneven surfaces.

Filling the tank:

1. Remove tank from base by grasping handle and pulling upward
2. Turn water tank upside-down and unscrew the fill cap by turning it counter clockwise
3. Fill tank with cool, distilled or tap water.
   • Distilled or softened water preferred. Minerals in tap water may cause a white dust to appear around unit and on your furniture.
   • Water temperature should not be to hot or to cold. Extreme temperatures damage unit.
4. Replace the fill cap by turning it clockwise. (Do not over tighten)
5. Return tank to base and let water settle for a few minutes.

Power:

1. Plug power cord into a 120V AC wall outlet only.
2. Set rotate switch to desired position.
   • Ion=Negative ions will be emitted which can eliminate dust particles in the air
   • Ion & Moisture=Rapidly adds moisture to the air while Ions eliminate dust particles for a clean, fresher air.
3. Aim nozzle away from the furniture and walls for proper air flow
4. Turn rotate switch to off when finished. Will operate approximately 12-14 hours in continuous use.
   • Add water indicator light will illuminate when tank is empty but motor will still run.
   • Do not leave water in tank for prolonged period. This can encourage bacteria growth.

How to Clean:

• ***We recommend cleaning the humidifier weekly during use, or more often if you have hard water, before storing or after unit has been stored for a long time. Use a mild bleach and water solution, never use detergent.***

1. Remove tank from base by grasping handle and pulling upward
2. Turn water tank upside-down and unscrew the fill cap by turning it counter clockwise
3.. Empty reservoir
4. Fill water tank with 1 teaspoon of household bleach and water. Let stand for 20 minutes.
5. Use a brush to clean off mineral deposits and debris from nebulizer and water sensor
   • Do not scrape or clean with metal tools
6. Empty reservoir and rinse with water until bleach odor is gone.
7. Make sure all parts are thoroughly dry before storing.

Important Safety Information

READ ALL INSTRUCTIONS BEFORE
USING YOUR MINI DEHUMIDIFIER.

WARNING - To reduce the risk of fire, electric shock, or injury; Use only as directed.

1. Always have water in the water tank when operating unit.
2. Use only clean, cool, tap water to fill tank (softened or distilled water is recommended, if tap water is hard).
3. To avoid white dust, you may use distilled, or a demineralization cartridge.
4. Be sure the filling cap of the tank is firmly tightened.
5. Always have the mist nozzle and the mist chamber in place while the unit is operating.
6. Use only 120V AC outlet. As with any electrical device, plug and unplug unit with dry hands only.
7. Never operate unit with damaged cord or plug
8. Always place unit on a flat, level surface away from direct sunlight. Keep cord away from heated surface and areas where it could be walked on or tripped over. Note: the mist will automatically shut off when the tank is empty; however, the fan will continue to run.
9. Unplug the unit when not in use and whenever you clean or move the unit.
10. Do not add medication of any type into the nozzle, base or water tank. Do not cover any opening of the unit or insert objects into any openings.
11. The unit should not be left unattended in closed rooms as air could become saturated and leave condensation on walls or furniture. Always leave room door partly open.
12. When cleaning inside of unit, keep water away from the air outlet. Exterior may be wiped with a damp cloth when unit is unplugged.
13. Do not tilt or tip unit or attempt to empty or fill it while it is operating.
14. Do not use detergent to clean any water containing parts of the unit. Detergent film dissolved in the water supply can interfere with the output of the unit.
15. The nebulizer (ionic transducer) is highly sensitive. Keep this important part clean and treat gently. Do not touch the nebulizer while the unit is operating, as possible burns could result. Do not touch the nebulizer with bare fingers. Any residue on the metal will reduce mist output.

SAVE THESE INSTRUCTIONS!

Important Safety Information

Short Cord Instructions

1. A short power-supply cord is provided to reduce risk resulting from becoming entangled in or tripping over a longer cord.
2. Longer extension cords are available and may be used if care is exercised in their use.
3. If a longer extension cord is used:
   a. The marked electrical rating of the extension cord should be at least as great as the electrical rating of the appliance.
   b. The longer cord should be arranged so that it will not drape over the counter top or tabletop where it can be pulled by children or tripped over unintentionally.

Polarized Plug

This appliance has a **polarized plug** (one blade is wider than the other); follow the instructions below:

To reduce the risk of electric shock, this plug is intended to fit into a polarized outlet only one way. If the plug does not fit fully into the outlet, reverse the plug. If it still does not fit, contact a qualified electrician. Do not attempt to modify the plug in any way.

This appliance is for household use only.

Know Your Ionic Humidifier And It's Parts

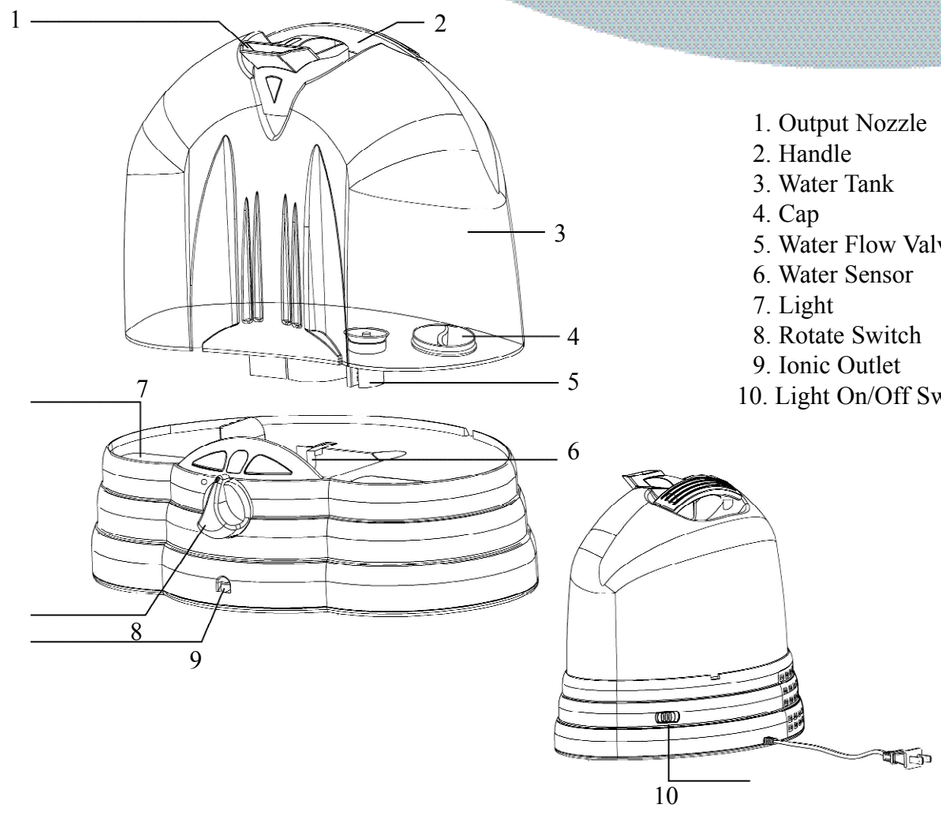

1. Output Nozzle
2. Handle
3. Water Tank
4. Cap
5. Water Flow Valve
6. Water Sensor
7. Light
8. Rotate Switch
9. Ionic Outlet
10. Light On/Off Switch