AROMA®



instruction manual

AEW-305

Electric Wok

Questions or concerns about your Aroma product?
www.AromaCo.com/Support
1-800-276-6286

DISCOVER more of our products!



Digital Rice & Grain Multicookers



Rice & Grain Cookers



Electric Kettles



Indoor Grills



...and More!

AROMA®

To Enhance and Enrich Lives.

Here at Aroma we strive to make a difference—to design and distribute products that enhance and enrich people's lives.

Aroma offers an array of exceptional products to make cooking simple and satisfying. Discover other countertop appliances and cookware from our current product lineup to complement your kitchen.

REGISTER YOUR PRODUCT

SCAN TO REGISTER
AromaCo.com/registration

Activate your warranty. Registration is quick and easy.

Be notified of:
- new product releases
- new test kitchen recipes
- sales and promotions

...and more!

/AromaHousewares

Published By:
Aroma Housewares Co. | 6469 Flanders Drive, San Diego, CA 92121, U.S.A.
1-800-276-6286 | www.AromaCo.com
©2022 Aroma Housewares Company | All rights reserved.

IMPORTANT SAFEGUARDS

Basic safety precautions should always be followed when using electrical appliances, including the following:

1. **Important: Read all instructions carefully before first use.**
2. Do not touch hot surfaces. Use handles or knobs.
3. To protect against electrical shock, do not immerse the appliance, power cord or plug in water or other liquid. See instructions for cleaning.
4. Close supervision is necessary when the appliance is used by or near children. This appliance is not intended to be used by children.
5. Unplug from the outlet when not in use and before cleaning. Allow the unit to cool before putting on or removing parts, and before cleaning the appliance.
6. Do not operate any appliance with a damaged power cord or plug, after the appliance malfunctions or if the appliance has been damaged in any manner.
7. The use of accessory attachments not recommended by Aroma® Housewares, may result in fire, electrical shock or injury.
8. Do not use outdoors.
9. Do not allow the power cord to touch hot surfaces or hang over the edge of a table or counter.
10. Do not place near a hot gas or electric burner or in a heated oven.
11. Do not use the appliance for anything other than its intended use.
12. Do not clean with metal scouring pads. Pieces can break off the pad and touch electrical parts, creating a risk of electrical shock. Metal scouring pads may also damage the finish.
13. Always unplug the power cord from the plug gripping area. Never pull on the power cord.
14. Extreme caution should be exercised when using or moving the appliance containing hot food, hot oil, or other hot liquids.
15. The wok should be operated on a separate electrical circuit from other operating appliances. If the electrical circuit is overloaded with other appliances, this appliance may not operate properly.
16. Store in a cool, dry place.
17. To disconnect, turn the adjustable temperature dial to Low then remove the plug from the wall outlet.
18. Place the electric wok on a dry, flat and heat-resistant surface, and use it in a well-ventilated area.
19. Do not place the wok too close to the edge of the table or countertop as the wok might be knocked off.
20. The heating base and other parts may become hot. Be sure to use the handles and wear protective oven mitts or gloves.
21. Check the handles on a regular basis to ensure that they are firmly attached to the wok.
22. This appliance is not intended for deep frying food.
23. Do not immerse in water.

SAVE THESE INSTRUCTIONS

IMPORTANT SAFEGUARDS

Short Cord Instructions

1. A short power-supply cord is provided to reduce the risks resulting from becoming entangled in or tripping over a longer cord.
2. Longer extension cords are available and may be used if care is exercised in their use.
3. If a longer extension cord is used:
   a.) The marked electrical rating of the extension cord should be at least as great as the electrical rating of the appliance.
   b.) The longer cord should be arranged so that it will not drape over the countertop or tabletop where it can be pulled by children or tripped over unintentionally.

DO NOT DRAPE CORD!

KEEP AWAY FROM CHILDREN!

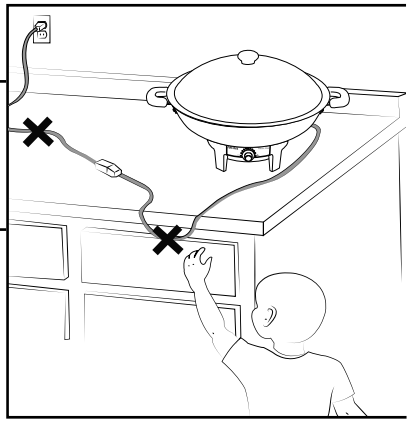

Polarized Plug

This appliance has a polarized plug (one blade is wider than the other); follow the instructions below:

To reduce the risk of electric shock, this plug is intended to fit into a polarized outlet only one way. If the plug does not fit fully into the outlet, reverse the plug. If it still does not fit, contact a qualified electrician. Do not attempt to modify the plug in any way.

If the supply cord is damaged, it must be replaced by the manufacturer, its service agent or a similarly qualified person in order to avoid a hazard.

THIS APPLIANCE IS FOR HOUSEHOLD USE ONLY.

Parts Identification

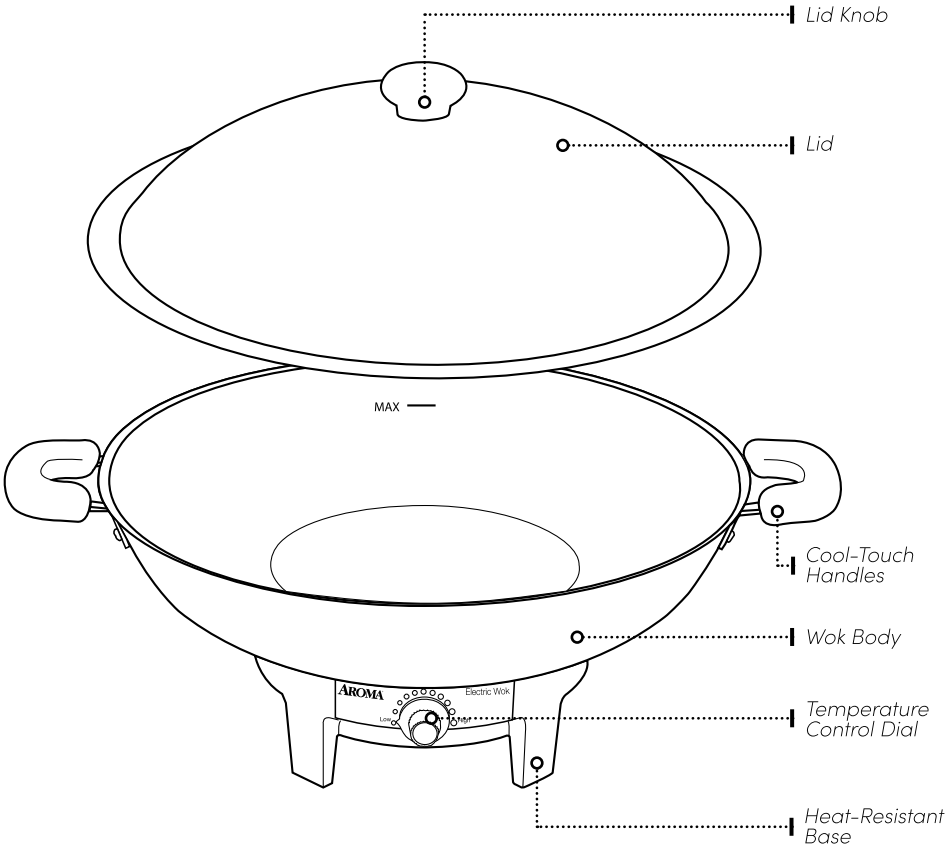

Controls/Functions

Temperature Control Dial

Turn the dial to the desired temperature to begin heating up to 450°F. To power the unit off, turn the dial to the Low position.

Before First Use ⚠

1. **Read all instructions and important safeguards.**
2. Remove all packaging materials and check that all items have been received in good condition.
3. Tear up all plastic bags and dispose of them properly as they can pose a risk to children.
4. Taking care not to wet the electrical compounds, wash the nonstick cooking surface with warm, soapy water. Dry all parts thoroughly then reassemble for use.
5. With the wok unplugged, turned to Low and completely cold, condition the nonstick cooking surface with 1 to 1½ tablespoons of cooking oil; use a kitchen paper towel to wipe it dry thoroughly.

To Clean

1. Clean the lid with warm, soapy water. Rinse and dry thoroughly.
2. Taking care not to wet any electrical components, wash the cooking surface with warm, soapy water. For stubborn food stains and residue, add 2 cups of warm, soapy water to the wok and soak for 20 minutes before cleaning.
3. Dry all parts thoroughly then reassemble for next use.

Assembling The Lid

1. Using a Philips-head screwdriver, remove the lid knob from the lid.
2. Line up the screw and lid knob with the hole at the top of the lid.
3. Using a Philips-head screwdriver, screw the lid knob securely into the lid.

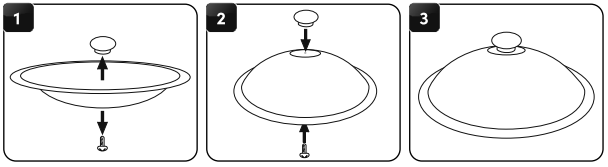

Note:

- Do not use harsh abrasive cleaners or products that are not considered safe to use on nonstick coatings.
- Not satisfied with your Aroma® purchase? Our product experts can help! **Before returning, contact Customer please Service at 1-800-276-6286** for product support, helpful tips and more!

Helpful Hints:

For even faster cleanup, the wok body, and lid can be washed in the dishwasher!

To Use Wok

1. Place the wok on a dry, level and heat-resistant surface.
2. Add cooking oil to the wok while the power is still off.
3. Plug the power cord into an available 120V AC outlet.
4. Turn the temperature control dial to the desired heat level.
5. Allow the wok and oil to preheat for roughly 3 minutes.
6. After preheating, carefully add the desired food to the wok.
7. Occasionally stir the ingredients using a long-handled wooden or heat-safe utensil until the food is fully cooked.
8. If desired, cover the wok with the lid during the cooking process to retain steam, heat or moisture. Use caution when removing the lid as hot steam will escape .
9. When finished cooking, turn the temperature control dial to the Low position and remove the cooked food from the wok immediately to prevent overcooking.
10. Unplug the power cord from the outlet to turn off the unit.



Caution:

Use caution when opening the lid to prevent burning to hands or face.

Note:

- The wok heats up fast. Be sure to prepare all the ingredients first and place them near the cooking area before the wok is plugged in.
- Wooden or heat-proof utensils are recommended while stirring and cooking ingredients. Metal utensils may scratch the nonstick surface.
- Hold one of the wok handles with a hot pad or oven mitt when stir-frying a large portion of food.
- Wok base can become extremely hot. Do not touch the base of the wok during or after cooking.

RECIPES

Stir-Fried Beef with Snow Peas

¾ lb.	flank steak, thinly sliced
2 cups	snow peas, stem and strings removed
½ cup	sliced mushrooms
½ cup	sliced carrots or bamboo shoots
1 tbsp.	dark soy sauce
1½ tsp.	cornstarch
¼ tsp.	sugar
4 tsp.	vegetable oil
1 tsp.	sesame oil (optional)
½ tsp.	salt

Marinate sliced beef in a mixture of soy sauce, cornstarch, sesame oil and sugar. Set aside. Heat 2 tablespoons of vegetable oil in wok. Stir-fry all the vegetables for about 2-3 minutes. Sprinkle with ½ teaspoon of salt while stirring. Remove, place in bowl and set aside. Heat the remaining oil in the wok. Add the marinated beef and stir constantly for 3-4 minutes or until it is almost done. Return the cooked vegetables to the wok and mix thoroughly.

SERVES 4.

Mandarin Chicken

1½ lbs.	boneless, skinless chicken breasts, cut into ¾" cubes
1	egg white, slightly beaten
¾ tbsp.	salt
½ tbsp.	cornstarch
3	green onions, cut into ½" pieces
1½ tbsp.	hoisin sauce
¾ tbsp.	dark soy sauce
2 cups	vegetable oil
--	dash white pepper

Season chicken with egg white, salt, cornstarch and white pepper. Cover and refrigerate for 10-15 minutes. Heat oil in the wok. Stir-fry chicken for 2-3 minutes or until meat turns white, separating all pieces while stirring. Drain well and set aside. Pour out all but 2 tablespoons of oil from the wok. Heat the wok again and add green onions, hoisin sauce, then chicken. Stir well, then add soy sauce.

SERVES 4.

RECIPES

Asparagus in Crab Meat Sauce

2 lbs.	fresh asparagus
3 oz.	crab meat, fresh, frozen or canned
3 tbsp.	peanut oil
1 tsp.	salt
1 cup & 2 tbsp.	chicken broth
2	egg whites, beaten
2 tbsp.	cornstarch, for thickening

Shred crab meat (if using canned crab meat, drain well). Remove white part of asparagus spears and peel tough skin. Cut diagonally into 2" lengths, rinse well and drain. Heat the wok with 2 tablespoons of oil. Stir-fry asparagus. Add salt and 2 tablespoons of chicken broth. Cook for 3-4 minutes, or until soft. Remove and set aside. Heat 1 tablespoon of oil. Add shredded crab meat and stir fry for 30 seconds. Add asparagus with 1 cup of chicken broth and cornstarch. Stir fry for another 30 seconds. Beat egg whites again and pour over crab meat and asparagus. Stir and heat thoroughly.

SERVES 4.

Cathay Chicken

8	small chicken drumsticks
2	green onions
4	fresh ginger root, sliced
1 tbsp.	sherry
¼ cup.	dark soy sauce
1 tbsp.	sugar
3 tbsp.	vegetable oil
--	Chinese parsley, for garnish

Wash chicken drumsticks. Pat dry. Cut each green onion into 3 pieces. Heat the wok with vegetable oil. Stir-fry ginger root and green onions. Add drumsticks, sherry, soy sauce, sugar and ½ cup of water. Let drumsticks gently boil under medium heat until most of the juice is gone. Turn occasionally. Remove and set on plate. Garnish with parsley and serve.

SERVES 4.

Recipes

Stir-Fried Pork with Green Beans

½ lb.	lean pork cut into thin strips
1 cup	green beans
2	Chinese mushrooms, presoaked, sliced
½ cup	bamboo shoots, sliced into long shoestrings
1	stalk celery, thinly sliced
1 tsp.	salt
3 tbsp.	vegetable oil
¼ tsp.	sugar
1 tsp.	rice wine
1 ½ tsp.	soy sauce
1	clove garlic crushed
½	green onion, minced
¾ cup	chicken broth or water

To Thicken:
2 tsp. cornstarch
1 tsp. sherry
1 tbsp. water
1 tbsp. oyster sauce

Blanch green beans for about 2 minutes, cut into 1" length. Set aside. Stir-fry garlic in 2 teaspoons of heated oil with a little bit of salt. Add pork strips, stir fry quickly until meat whitens. Remove and set aside. Heat the remaining oil. Add green onion, mushrooms, bamboo shoots, celery and blanched green beans, stir fry for 2 minutes, then add soy sauce. Add the cooked pork and chicken broth and bring to a boil. Reduce heat, cover wok and cook for 1 minute. Add thickening ingredients and stir. Mix thoroughly.

SERVES 4.

Limited Warranty

Aroma Housewares Company warrants its products against defects in material and workmanship for one year from the provable date of purchase in the United States.

Within this warranty period, Aroma Housewares Company will repair or replace, at its discretion, defective parts at no charge. Proof of the date of purchase, such as the original dated sales receipt, will be required with any request for warranty repair or replacement. All liability is limited to the amount of the purchase price.

This warranty does not apply if the warranty period expired; the product has been modified by any unauthorized service center or personnel; the defect was subject to abuse, improper use not conforming to product manual instructions, or environmental conditions more severe than those specified in the manual and specification, neglect of the owner or improper installation; the defect was subject to Force Majeure such as flood, fire, lightning, earthquake, other natural calamities, war. The warranty excludes accessories and replacement parts. This warranty is void if the product is used for other than single-family household use or subjected to any voltage and waveform other than as specified on the rating label (e.g., 120V ~ 60Hz).

Aroma sole obligation under the warranty shall be to replace the defective product with a working one or a similar model of equivalent value, if the same model is not available, in the occurrence of any failure or defect covered under the warranty during the warranty period. Refurbished items or items not purchased through an authorized retailer are not eligible for warranty claims. Transportation charges on parts, or products in whole, submitted for repair or replacement, under this warranty, must be borne by the purchaser.

This warranty gives you specific legal rights, which may vary from state to state, and does not cover areas outside the United States.

Service & Support

In the event of a warranty claim, or if service is required for this product, please contact Aroma® customer service toll-free at:

1-800-276-6286 | CustomerService@AromaCo.com
M-F, 8:30am-4:30pm, Pacific Time

www.AromaCo.com

Aroma Housewares Company
6469 Flanders Drive, San Diego, CA 92121, U.S.A.

Activate your warranty. Registration is quick and easy.

SCAN TO REGISTER
or visit
AromaCo.com/registration

Note:

· Proof of purchase is required for all warranty claims.



To Enhance and Enrich Lives.

www.AromaCo.com