PATH-PRO®

ARIENS®

OPERATOR'S MANUAL
MANUEL DU UTILISATEUR

MODELS

938036 – PATH-PRO MANUAL CHUTE
(SN 000101 +)

938037 – PATH-PRO REMOTE CHUTE
(SN 000101 +)

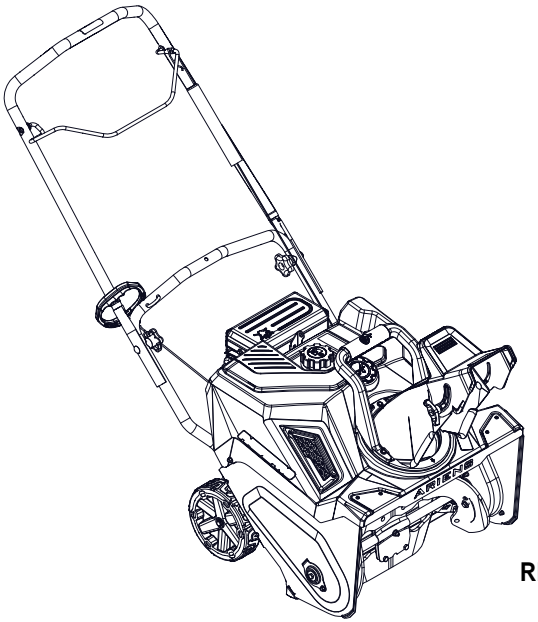

REGISTER YOUR PRODUCT!

E10 E15 E20 E85

EN ENGLISH

FR FRANÇAIS

30362100A • 6/26

TABLE OF CONTENTS

WELCOME 1
Register Your Product! 1
SAFETY 2
Practices & Laws 2
Emission Control System 2
Required Operator Training 2
Safety Alert Symbol 2
Signal Words 2
Safety Decals 3
Safety Rules 4
CONTROLS & FEATURES 8
Engine Key 9
Auger Control Bar 9
Choke Control Lever 9
Fuel Valve 9
Throttle Control Lever 9
Primer Bulb 9
Recoil Starter Handle 9
Electric Start Button 9
Discharge Chute Handle 9
Discharge Chute Rotation Lever 10
Discharge Chute Deflector Handle 10
OPERATION 10
Emergency Stopping 10
Before Operating Unit 10
Start Engine 10
Position Discharge Chute 11
Operate Unit 12
Stop The Engine 12
MAINTENANCE 12
Service Position 12
Maintenance Schedule 13
Service Parts 13
Add Fuel Stabilizer 13
Clean Unit 13
Check Engine Oil 13
Change Engine Oil 13
Check Fasteners 13
Check Auger Paddle Wear 13
Check Scraper Blade Wear 13
Check Belt Wear 14
SERVICE & ADJUSTMENTS 14
Replace Auger Paddles 14
Adjust Auger Cable 15
Replace Belt 15
Adjust Scraper Blade 16
Replace Scraper Blade 16
STORAGE 18
Short Term 18
Long Term 18
Start-of-Season Fuel Preparation 18
ACCESSORIES 18
TROUBLESHOOTING 19
SPECIFICATIONS 20
WARRANTY 21

WELCOME

REGISTER YOUR PRODUCT!

It is extremely important to register your product at time of purchase. Product registration activates the warranty and establishes a communication link from AriensCo.

Locate the model and serial number decal on your unit and register those numbers online at www.ariens.com. See Figure 1 for decal location. Be aware that the original selling dealer may have already completed product registration on behalf of the original purchaser.

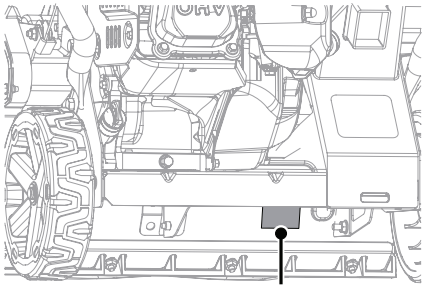

Model & Serial Number Decal
Figure 1

Record model number here.

Record serial number here.

MANUALS

Before operating or servicing the unit, carefully and completely read the manuals provided with the unit. They contain safety instructions and important information about unit controls.

The engine on this unit is covered by a separate manual. Refer to the engine manual for engine service recommendations. Contact the engine manufacturer for a replacement manual if necessary.

Your dealer must review important information in this manual with you before or upon delivery of the unit. It is your responsibility to read and understand all safety precautions and instructions in the manuals. If you do not understand or have difficulty following the instructions, contact your Ariens dealer for assistance. To locate your nearest Ariens dealer, go to www.ariens.com.

A parts manual for your unit is available for free download or purchase at www.ariens.com.

DISCLAIMER

Ariens reserves the right to discontinue, make changes to, and add improvements upon its products at any time without public notice or obligation. The descriptions and specifications contained in this manual were in effect at printing. Equipment described in this manual may be optional. Some illustrations may not be applicable to your unit.

SAFETY

Read these safety rules and follow them closely. Failure to follow these rules could lead to loss of control of unit, severe personal injury or death to you or bystanders, or result in damage to property or the machine.

PRACTICES & LAWS

Practice usual and customary safe working precautions. Learn applicable rules and laws in your area. Always follow the practices set forth in this manual.

EMISSION CONTROL SYSTEM

This equipment and/or its engine may include exhaust and evaporative emissions control system components required to meet U.S. Environmental Protection Agency (EPA) and/or California Air Resources Board (CARB) regulations. Tampering with emission controls and components by unauthorized personnel may result in severe fines or penalties. Emission controls and components can only be adjusted by an Ariens dealer or an authorized engine manufacturer's service center. Contact your Ariens Equipment Retailer concerning emission controls and component questions.

REQUIRED OPERATOR TRAINING



Read and understand the Operator's Manual and decals on the unit. This information is for your safety and the proper use of your equipment. Failure to follow these instructions and warnings may cause death or serious injury. If you have purchased this product from an Ariens dealer, the dealer can provide you with training.

Familiarize yourself and any other operators with all controls and the safe use of the features of this unit. If you loan, rent or sell this product to others, provide them with all manuals.

If you have any questions, please call our customer support line at 920-756-4688 or contact us at www.ariens.com. Do not use this equipment if, after reading the Operator's Manual and the on-board decals, you have any questions about the safe use of this product.



WARNING: AVOID INJURY. This snow thrower is capable of crushing or amputating body parts. Failure to observe the safety instructions in the manuals and on decals could result in serious injury or death.

ALWAYS disengage auger, stop unit and engine and allow moving parts to stop before leaving operator's position.

SAFETY ALERT SYMBOL



This is the safety alert symbol. It means:

- **ATTENTION!**
- **YOUR SAFETY IS INVOLVED!**

When you see this symbol:

- **BECOME ALERT!**
- **OBEY THE MESSAGE!**

SIGNAL WORDS

The safety alert symbol above and signal words below are used on decals and in this manual. Read and understand all safety messages.

1. Danger



DANGER: Indicates an IMMINENTLY HAZARDOUS SITUATION! If not avoided, WILL RESULT in death or serious injury.

2. Warning



WARNING: Indicates a POTENTIALLY HAZARDOUS SITUATION! If not avoided, COULD RESULT in death or serious injury.

3. Caution



CAUTION: Indicates a POTENTIALLY HAZARDOUS SITUATION! If not avoided, MAY RESULT in minor or moderate injury. It may also be used to alert against unsafe practices.

4. Notice

NOTICE: Indicates information or procedures that are considered important but not hazard related. If not followed, property damage could result.

5. Important

IMPORTANT: Indicates general reference information worthy of special attention.

SAFETY DECALS

The safety decals on your machine are visual reminders of the important safety information in this manual. All messages on your unit must be fully understood and carefully followed. Safety decals on the machine are explained below.

Always replace missing or damaged safety decals. Replacement decal information is in the parts manual for your machine. Decals can be ordered from your dealer.

See Figure 2 for safety decal locations.

Safety Decal Locations

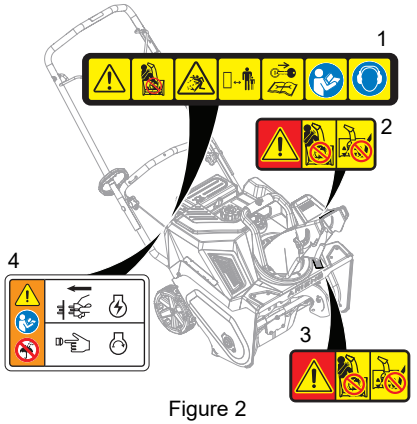

Figure 2

Safety Decal Descriptions

1. DANGER!



Danger!



Only use clean-out tool to clear blockages. NEVER use your hands.



NEVER direct discharge towards persons or property that may be injured or damaged by thrown objects.



Keep people away from unit while operating. Keep children out of work area and under watchful care of a responsible adult.



Stop engine, remove key, and read manual before making any repairs or adjustments.



Read operator's manual.



Wear appropriate hearing protection.

2. DANGER!



Danger!



ROTATING PARTS.

Keep clear of auger while engine is running.

- Read Operator's Manual.
- Allow operation only by properly trained adult, never children.
- Stop engine and remove ignition key prior to leaving the operator's position for any reason.
- Keep all controls, guards and safety devices properly serviced and functional.
- Never direct discharge towards persons or property that may be injured or damaged by thrown objects.



3. DANGER!



Danger!





ROTATING PARTS! ONLY use clean-out tool to clear blockages. NEVER use your hands. High speed auger/impeller rotates below discharge opening. Wait for all moving parts to stop before removing clogs or servicing.

4. DANGER!



Danger!



Read operator's manual.



Do not operate in rain.

SAFETY RULES

The following safety instructions are based on the snow thrower specifications of the American National Standards Institute and ISO in effect at the time of production.

Training

Read, understand and follow all instructions on the machine and in the manual(s) before operating this unit. Be thoroughly familiar with the controls and the proper use of the equipment. Know how to stop the unit and disengage the controls quickly.

Never allow children to operate the equipment. Never allow adults to operate the equipment without proper instruction, including actual operation.

Keep the area of operation clear of all persons, particularly small children. Keep children under watchful care of a responsible adult. Be alert and shut off unit if children enter area.

Exercise caution to avoid slipping or falling, especially when operating the snow thrower in reverse.

Always remove key and/or wire from spark plug before assembly, maintenance or service. Unintentional engine start up can cause death or serious injury.

Complete a walk-around inspection of the unit to understand the unit, your work area, and all safety decals.

Preparation

Always check overhead and side clearances carefully before operation.

Always be aware of traffic when operating along streets or curbs.

Thoroughly inspect the area where the equipment is to be used and remove all pets, doormats, sleds, boards, toys, wires, debris and other foreign objects.

Disengage the auger control lever before starting the engine (motor).

Handle fuel with care; it is highly flammable.

- Use an approved fuel container.
- Never add fuel to a running engine or hot engine.
- Fill fuel tank outdoors with extreme care. Never fill fuel tank indoors.
- Never fill containers inside a vehicle or on a truck or trailer bed with a plastic liner. Always place containers on the ground, away from your vehicle, before filling.
- When practical, remove gas-powered equipment from the truck or trailer and refuel it on the ground. If this is not possible, then refuel such equipment on a trailer with a portable container, rather than from a gasoline dispenser nozzle.
- Keep the nozzle in contact with the rim of the fuel tank or container opening at all times, until refueling is complete. Do not use a nozzle lock-open device.
- Replace gasoline cap securely and wipe up spilled fuel.
- If fuel is spilled on clothing, change clothing immediately.

Never attempt to make any adjustments while the engine (motor) is running (except when specifically recommended by manufacturer).

Always allow unit and engine to adjust to outdoor temperature before clearing snow.

Operation

Never leave a running unit unattended. Always shut off engine before leaving unit.

Do not put hands or feet near or under rotating parts. Keep clear of the discharge opening at all times.

Moving and/or rotating parts can cut off body parts such as fingers or a hand. Always keep hands, feet and clothing away from all rotating parts during operation.

Always keep hands away from all pinch points.

Do not touch unit parts which might be hot from operation. Allow parts to cool before attempting to maintain, adjust or service.

Check for weak spots on docks, ramps or floors. Avoid uneven work areas and rough terrain. Stay alert for hidden hazards.

Exercise extreme caution when operating on or crossing gravel drives, walks or roads. Stay alert for hidden hazards or traffic.

After striking a foreign object, stop the engine (motor), remove the wire from the spark plug, thoroughly inspect the snow thrower for any damage, and repair the damage before restarting and operating the snow thrower.

If the unit should start to vibrate abnormally, stop the engine (motor) and check immediately for the cause.

Stop the engine (motor) whenever you leave the operating position, before unclogging the auger/impeller housing or discharge chute, and when making any repairs, adjustments or inspections.

When cleaning, repairing or inspecting the snow thrower, make certain the auger/impeller and all moving parts have stopped. Disconnect the spark plug wire and keep the wire away from the plug to prevent someone from accidentally starting the machine.

Do not run the engine (motor) indoors. Open the outside doors; exhaust fumes are dangerous.

Never operate the snow thrower without proper guards and other safety protective devices in place.

Thrown objects can cause injury. Never direct the discharge toward people or areas where property damage can occur from thrown objects. Keep children and others away.

Do not overload the machine capacity by attempting to clear snow at too fast a rate. Slow down and turn corners slowly.

Never operate the machine at high transport speeds on slippery surfaces. Look behind and use care when backing.

Do not operate in reverse unless absolutely necessary. Always back up slowly and look down and behind before and while backing.

Do not carry passengers.

Disengage attachment drive when traveling from one work area to another.

Disengage power to the auger/impeller when snow thrower is transported or not in use.

Use only attachments and accessories approved by the manufacturer of the snow thrower (such as wheel weights, counterweights or cabs).

This product is equipped with an internal combustion type engine. Do not use unit on or near any unimproved, forest-covered or brush-covered land unless exhaust system is equipped with a spark arrester meeting applicable local, state or federal laws. A spark arrester, if it is used, must be maintained in effective working order by operator.

Never operate the snow thrower without good visibility or light. Falling snow, fog, etc. can reduce vision and cause an accident.

Never operate unit after or during the use of medication, drugs or alcohol. Safe operation requires complete and unimpaired attention at all times.

Never allow anyone to operate this unit when their alertness or coordination is impaired.

Do not throw snow any higher than necessary.

Clearing a Clogged Discharge Chute

Hand contact with the rotating auger/impeller inside the discharge chute is the most common cause of injury associated with snow throwers. Never use your hand to clean out the discharge chute.

To clear the chute:

1. SHUT THE ENGINE OFF!
2. Wait 10 seconds to be sure the auger/impeller blades have stopped rotating.
3. Always use a clean-out tool, not your hands.

Maintenance and Storage

Secure unit so it will not tip over during maintenance.

Before cleaning, removing clogs or making any inspections, repairs, etc., disengage auger control lever, stop unit and engine, allow moving parts to stop and hot parts to cool.

Make sure the equipment is in safe working condition. Check hardware at frequent intervals for proper tightness. If components are worn or damaged, replace with manufacturer's recommended parts.

Do not change engine governor settings or over-speed engine.

Adjust and service as required. All motion of auger/impeller must stop quickly when auger control lever is released.

Always maintain unit in safe operating condition. Damaged or worn out muffler can cause fire or explosion.

Keep unit free of ice or other debris. Clean up oil or fuel spills.

Always keep protective structures, guards, and panels in good repair, in place and securely fastened. Never modify or remove safety devices.

Never store the machine with fuel in the fuel tank inside a building where ignition sources are present such as hot water heaters, space heaters or clothes dryers. Allow the engine to cool before storing in any enclosure or covering the unit.

Always refer to operator's manual for important details if the snow thrower is to be stored for an extended period.

Maintain or replace safety and instruction labels as necessary.

Run the machine a few minutes after throwing snow to prevent freeze-up of the auger/impeller.

Personal Protection

Do not operate the equipment without wearing adequate winter garments. Avoid loose fitting clothing that can get caught in moving parts. Wear footwear that will improve footing on slippery surfaces.

Wear adequate safety gear, including safety glasses with side shields, and protective gloves.

Do not wear loose clothing or jewelry, and tie back hair that may get caught in rotating parts.

Protect eyes, face and head from objects that may be thrown from unit. Wear appropriate hearing protection.

Slope Operation

Operate the snow thrower on level surfaces. Stay off slopes and slippery surfaces.

Do not clear snow across the face of slopes; go up and down. Exercise extreme caution when operating on slopes. Do not attempt to clear steep slopes.

Use a slow speed to avoid stops or shifts on slopes. Avoid starting or stopping on a slope. Do not park unit on a slope unless absolutely necessary. When parking on a slope always block the wheels.

Do not operate near drop-offs, ditches, or embankments. Unit can suddenly turn over if a wheel is over the edge of a cliff or ditch, or if an edge caves in.

Fuel
Do not run engine in an enclosed area. Always provide good ventilation. Fumes from engine exhaust can cause injury or death.
Fuel is highly flammable and its vapors are explosive. Handle with care. Use only an approved gasoline container with an appropriately sized dispensing spout.
No smoking, sparks or flames. Always allow engine to cool before servicing.
Never fill fuel tank when engine is running or hot from operation.
Never fill or drain fuel tank indoors.
Replace fuel cap securely and clean up spilled fuel.
Properly remove fuel before tipping unit up onto housing, so no spills will occur.

Towing/Transporting
Always shut off engine and close fuel shut-off valve or drain fuel when transporting unit on a truck or trailer.
Use extra care when loading or unloading unit onto trailer or truck. Secure unit chassis to transport vehicle. Never secure from rods or linkages that could be damaged. Do not transport machine while engine is running.

Accessories
Use only AriensCo-approved attachments that are appropriate to your use and can be used safely in your application.

CONTROLS & FEATURES

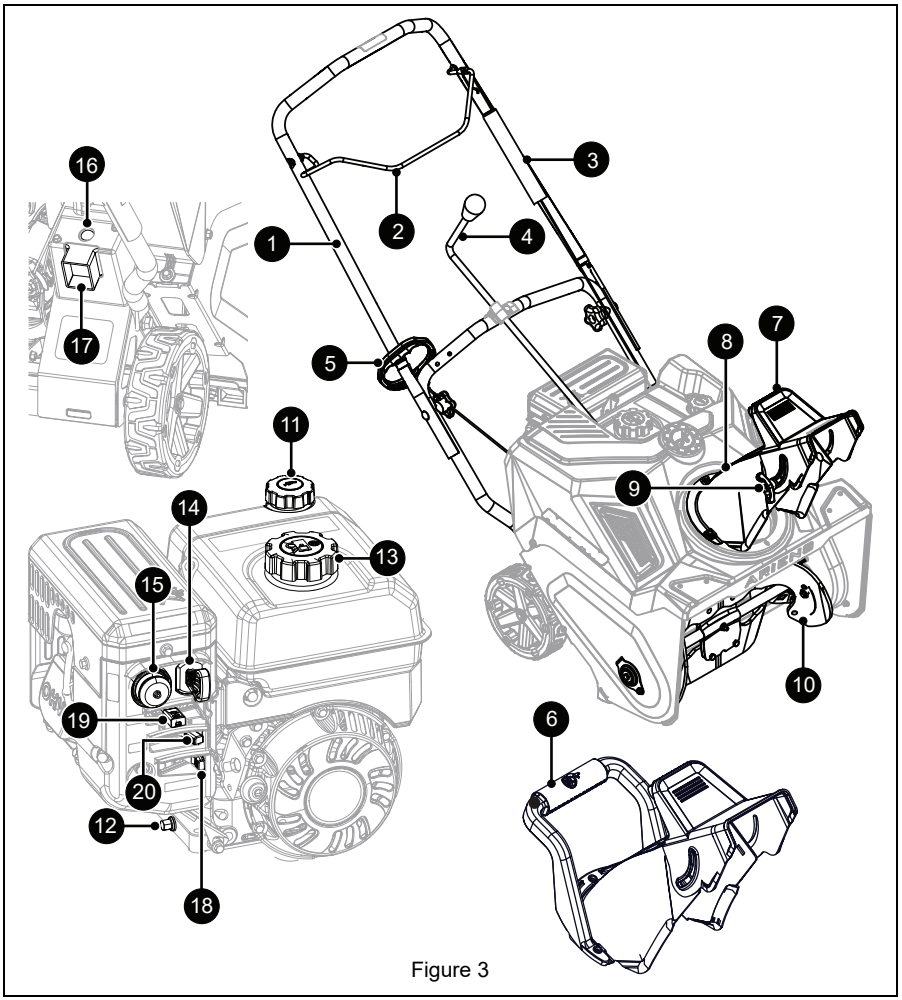

Figure 3

1. Handlebar
2. Auger Control Bar
3. Auger Control Cable Assembly
4. Discharge Chute Rotation Lever (Model 938037)
5. Recoil Starter Handle
6. Discharge Chute Handle (Model 938036)
7. Discharge Chute Deflector Handle
8. Discharge Chute
9. Wing Knob
10. Auger Paddle
11. Oil Fill
12. Oil Drain Plug
13. Fuel Cap & Tank
14. Engine Key
15. Primer Bulb
16. Electric Start Button
17. Power Cord Receptacle
18. Fuel Valve
19. Throttle Control Lever
20. Choke Control Lever

WARNING: AVOID INJURY. Read and understand the *Safety* section before proceeding.

See Figure 3 for all controls and features locations.

ENGINE KEY

See Figure 4.

Controls power to the engine. The removable engine key must be inserted for engine to start.

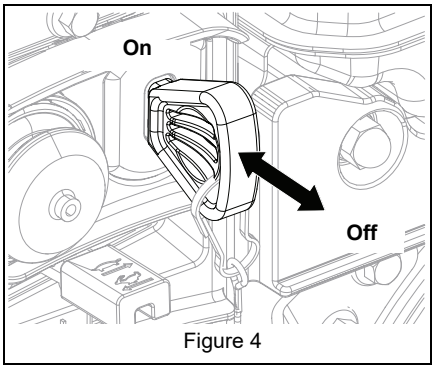

Figure 4

AUGER CONTROL BAR

Engages and disengages auger paddle rotation. Pulls unit forward when engaged. See Figure 12.

CHOKE CONTROL LEVER

See Figure 5.

Restricts airflow to the engine for easier start on cold engines.

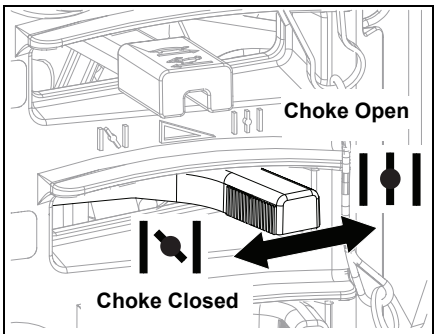

Figure 5

FUEL VALVE

See Figure 6.

Controls fuel flow to the engine.

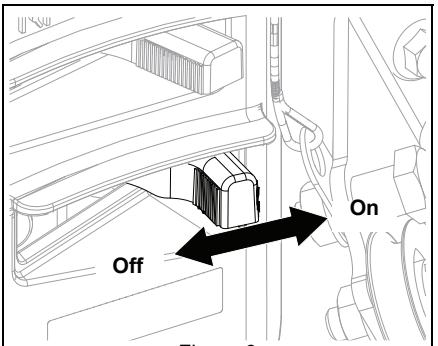

Figure 6

THROTTLE CONTROL LEVER

See Figure 7.

Controls engine speed.

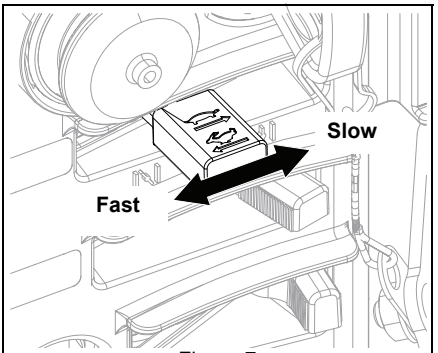

Figure 7

PRIMER BULB

Adds fuel to engine for easier start on cold engines. See *Start Engine* on page 10.

RECOIL STARTER HANDLE

When pulled, handle will start engine. See *Start Engine* on page 10.

ELECTRIC START BUTTON

Starts a correctly choked and primed engine.

DISCHARGE CHUTE HANDLE

Model 938036

Controls direction of snow discharge. See *Position Discharge Chute* on page 11.

DISCHARGE CHUTE ROTATION LEVER

Model 938037

See Figure 8.

Controls direction of snow discharge. See *Position Discharge Chute* on page 11.

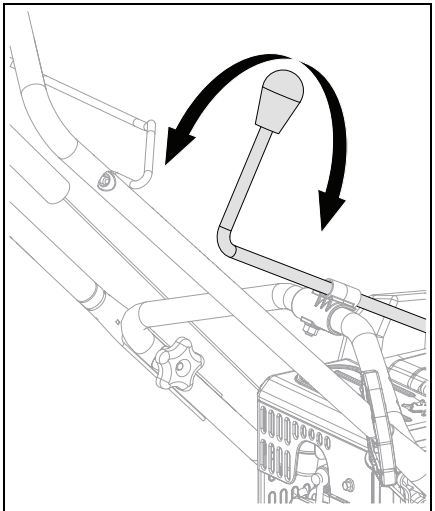

Figure 8

DISCHARGE CHUTE DEFLECTOR HANDLE

See Figure 9.

Moves discharge deflector up or down to control height of snow discharge.

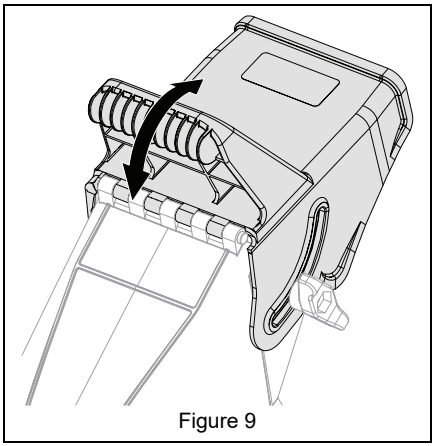

Figure 9

OPERATION

WARNING: AVOID INJURY. Read and understand the *Safety* section before proceeding.

IMPORTANT: All references to left, right, front or rear are given from the perspective of operator in operator's position, facing the direction of forward travel.

EMERGENCY STOPPING

1. Release auger control bar.
2. Remove engine key.
3. Wait for all moving parts to stop before leaving operator's position.

BEFORE OPERATING UNIT

IMPORTANT: Register your product! See *Register Your Product!* on page 1.

1. Check for frozen components.
2. Check fuel level and add fuel if needed.

IMPORTANT: Use fresh unleaded fuel with an octane rating of at least 87. DO NOT use E85 blended fuels; the engine is not E20 / E30 / E85 compatible. The maximum recommended ethanol content is 10%. Ariens recommends using a quality fuel stabilizer in all fuel. See *Short Term* on page 18.

3. Check engine oil level and add oil if needed. Refer to engine manual.
4. Check function of all controls.
5. Know how to stop in an emergency. See *Emergency Stopping* on page 10.

START ENGINE

1. Position discharge chute in a safe direction. See *Position Discharge Chute* on page 11.
2. ***Electric Start:*** Connect power cord to starter and then into 120V 3-wire grounded outlet. See *Accessories on page 18.*

IMPORTANT: Use a power cord that is UL listed or CSA certified, rated for a minimum of 13 amps, grounded and labeled as suitable for outdoor use.

3. ***Cold Engines Only:*** Move choke control lever to open position.
4. Insert engine key.
5. Move fuel valve to on position.
6. Move throttle control lever to fast position.

7. ***Cold Engines Only:*** Press primer bulb 3 times. DO NOT excessively prime the system. Always cover vent hole before primer bulb is pressed. Hold primer in compressed position for one full second each time primer bulb is pressed.
8. ***Electric Start:*** Press electric start button.

NOTICE: Press and hold electric start button until engine starts. DO NOT hold for more than five seconds. Wait at least one minute between starting attempts to help prevent overheating starter and possible damage.

9. ***Recoil Start:*** Pull recoil starter handle.
   a. Grasp handle and pull rope out slowly until it pulls harder.
   b. Pull handle firmly and quickly with a rapid, continuous full-arm stroke. Repeat until engine starts. If engine does not start, see *Troubleshooting* on page 19.
   c. Let handle rewind slowly after engine starts. DO NOT let handle snap back against handlebar.
10. Gradually move choke control lever to closed position after engine starts.
11. ***Electric Start:*** Disconnect power cord from outlet and then from starter.

POSITION DISCHARGE CHUTE

IMPORTANT: Always throw snow in a safe direction, away from people and windows.

NOTICE: If chute becomes frozen and does not turn correctly, take unit into warm area until controls thaw.

See Figure 10 or 11.

1. Release auger control bar.
2. ***Model 938036:*** Turn discharge chute handle in the direction you want to throw snow.
   Model 938037: Move discharge chute rotation lever left or right to rotate chute.
3. Loosen wing knob and move deflector handle up or down to control discharge height.
4. Tighten wing knob.

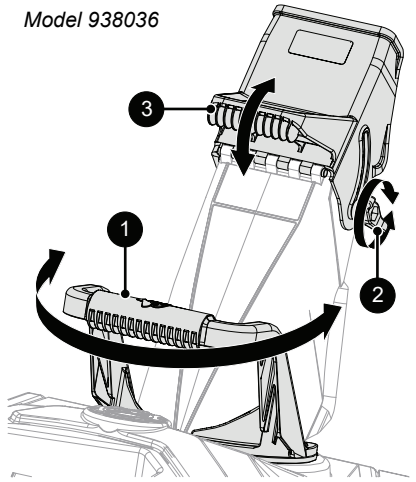

1. Discharge Chute Handle
2. Wing Knob
3. Discharge Chute Deflector Handle

Figure 10

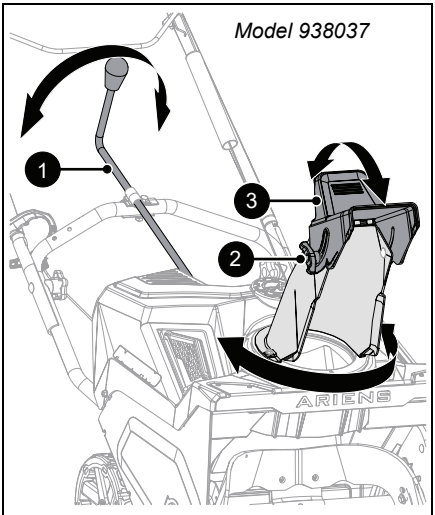

1. Discharge Chute Rotation Lever
2. Wing Knob
3. Discharge Chute Deflector Handle

Figure 11

OPERATE UNIT

1. Rotate discharge chute and move deflector to desired positions. See *Position Discharge Chute* on page 11.

NOTICE: On some surfaces, auger paddle rotation may leave residual paddle material. This usually washes off after rain showers. Scraper bar may be adjusted to minimize this condition. See *Adjust Scraper Blade* on page 16.

2. Engage auger control bar to clear snow and move unit forward. Release bar to stop augers and unit. See Figure 12.

IMPORTANT: If unit does not propel itself forward in heavy snow or on slippery surfaces, push forward on the handlebar. Allow unit to work at its own pace.

IMPORTANT: Disengage auger when traveling between work areas.

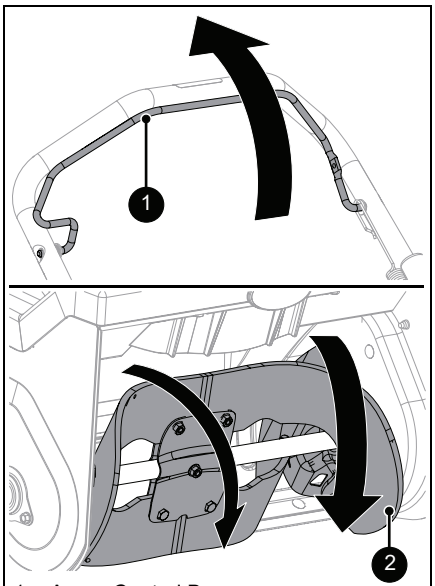

1. Auger Control Bar
2. Auger Paddle

Figure 12

3. Move handlebar left and right to steer unit.
4. Reposition discharge chute and deflector as necessary.

Clear a Clogged Discharge Chute

WARNING: NEVER use your hand to clean out discharge chute.

1. Stop engine and wait for all moving parts to stop and for hot parts to cool.
2. Use a tool to clear the clog. See *Troubleshooting* on page 19.

STOP THE ENGINE

1. Operate the auger momentarily to remove loose or melting snow from unit to help prevent moving parts from freezing.
2. Release auger control bar.
3. Move throttle control lever to the slow position.
4. Remove engine key.
5. Move fuel valve to off position.

MAINTENANCE

WARNING: AVOID INJURY. Read and understand the *Safety* section before proceeding.

Your Ariens dealer can provide service and adjustments to keep your unit operating at peak efficiency. Contact your authorized Ariens dealer for service to your unit or its engine.

SERVICE POSITION

See Figure 13.

1. Carefully tip unit rearward onto a 20 cm (8") high support positioned beneath center of upper handlebars.

NOTICE: Ensure support is 20 cm (8") high to prevent oil leakage or damage.

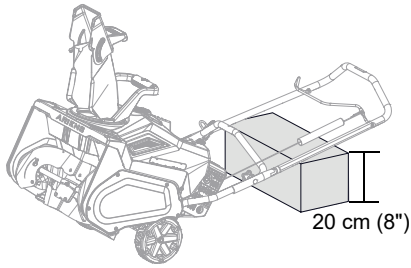

Figure 13

MAINTENANCE SCHEDULE

Service Performed	Each Use	Every 10 hrs.	Annually	As Needed
Add Fuel Stabilizer *				
Clean Unit	•			
Check Fasteners	•			
Check Auger Paddle Wear		•		
Check Scraper Blade Wear		•		
Replace Scraper Blade‡				•
Check Belt Wear		•		
Check Engine Oil **	•			
Change Engine Oil **				
Replace Auger Paddles				•

* See *Add Fuel Stabilizer* on page 13.

** Refer to engine manual for instructions.

‡ See *Check Scraper Blade Wear* on page 13.

SERVICE PARTS

See your Ariens dealer to purchase service parts for your unit.

Description	Part No.
Ariens 5W-30 Engine Oil	
• 473 ml (16 oz)	00091000
• 591 ml (20 oz)	70737900
• 946 ml (32 oz)	70706800
Ariens 0W-30 Synthetic Engine Oil	
• 591 ml (20 oz)	00077600
• 946 ml (32 oz)	00077900
Fuel Stabilizer – 118 ml (4 oz)	
• Except Canada	04730400
• For Canada Only	04742500
Auger Cable	06900533
Auger Belt	07200627
Auger Paddle Replacement Kit	73801500
Scraper Blade Replacement Kit	53803100
Pawl Arm Replacement Kit	53803800
Chute Assembly Kit	53806300

ADD FUEL STABILIZER

Add fuel stabilizer to gasoline at time of purchase to help ensure the best performance over the life of that fuel. See *Short Term* on page 18 for instructions.

CLEAN UNIT

1. Wash salt and other corrosive ice-melting agent residue from unit with mild soap and low-pressure water.

NOTICE: NEVER spray unit with high-pressure water.

2. Remove snow and debris with a soft-bristled brush. DO NOT use harsh abrasives or cleaners.

CHECK ENGINE OIL

NOTICE: Engine oil level must be maintained at correct level or engine damage may occur. Refer to engine manual.

CHANGE ENGINE OIL

Refer to engine manual.

CHECK FASTENERS

Check for loose hardware.

CHECK AUGER PADDLE WEAR

Replace when auger paddles have worn through wear indicator holes. See *Replace Auger Paddles* on page 14. See Figure 14.

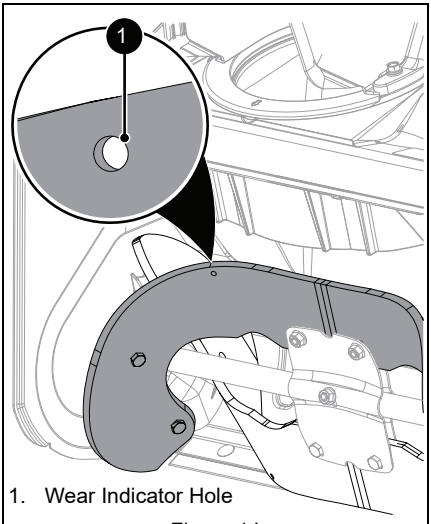

1. Wear Indicator Hole

Figure 14

CHECK SCRAPER BLADE WEAR

Replace when damaged or when scraper blade has been adjusted down as far as possible and does not touch surface or clear properly. Scraper blade MUST be replaced when worn through to wear indicator pockets. See Figure 15.

NOTICE: DO NOT allow scraper blade to wear excessively or auger housing will become damaged. See *Replace Scraper Blade* on page 16.

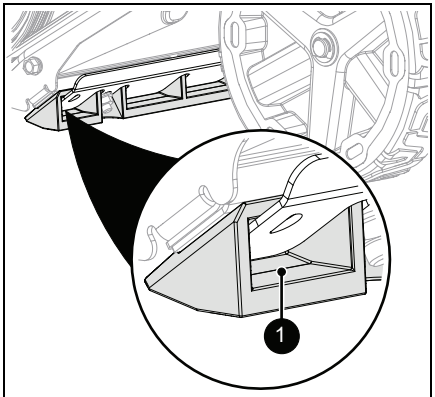

1. Wear Indicator Pocket

Figure 15

CHECK BELT WEAR

Adjust auger cable to compensate for belt wear. If auger cable has been adjusted for maximum tension and auger stops or stutters when auger control bar is engaged, belt may need replacement. See *Adjust Auger Cable* on page 15 and *Replace Belt on Page 15*.

SERVICE & ADJUSTMENTS

WARNING: AVOID INJURY. Read and understand the *Safety* section before proceeding.

REPLACE AUGER PADDLES

Replace auger paddles when paddles have worn completely through wear indicator holes. See Figure 14.

IMPORTANT: Always replace auger paddles in pairs. DO NOT replace only one paddle.

Remove Auger Paddles

1. Stop engine and wait for all moving parts to stop and for hot parts to cool.
2. Disconnect spark plug wire.
3. Place unit in service position. See *Service Position* on page 12.

See Figure 16.

4. Remove hardware retaining paddles to center plate and side plates. Discard all parts.

IMPORTANT: DO NOT remove center plate.

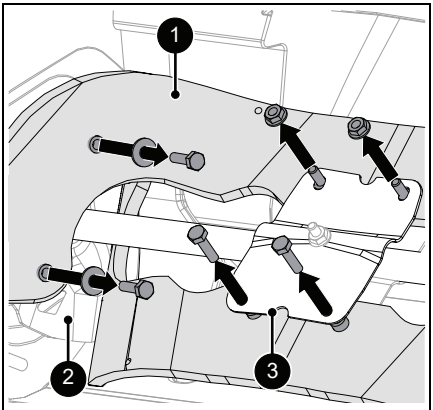

1. Auger Paddle
2. Side Plate
3. Center Plate

Figure 16

Install Auger Paddles

1. Install spacers into paddle holes. See Figure 17.

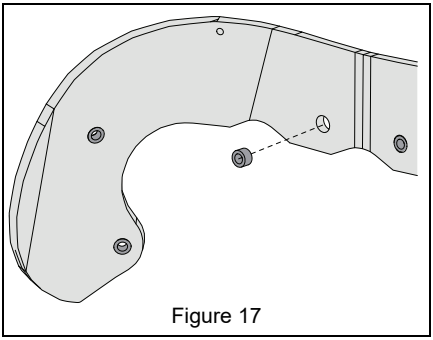

Figure 17

IMPORTANT: Install new paddles so wear indicator holes are positioned on right side of unit.

2. Secure each paddle to side plates with four hex bolts, four flat steel washers and four flange nuts.
3. Secure each paddle to center plate with two hex bolts and two flange nuts.
4. Torque paddle hardware to 5.6 – 10.2 N•m (50 – 90 lb-in). DO NOT overtighten.
5. Rotate auger paddles by hand to ensure paddles are secure and do not interfere with housing.
6. Return unit to operating position.
7. Adjust auger cable tension. See *Adjust Auger Cable* on page 15.

8. Reconnect spark plug wire.

ADJUST AUGER CABLE

1. Stop engine and wait for all moving parts to stop and for hot parts to cool.

See Figure 18.

2. Move plastic sleeve up to auger control bar.
3. Remove cable end from adjustment bracket.
4. Insert Z-hook into highest adjustment bracket hole reachable.
5. Wrap cable end around adjustment bracket.

IMPORTANT: When auger control lever is disengaged, there should be slight slack in cable and no tension.

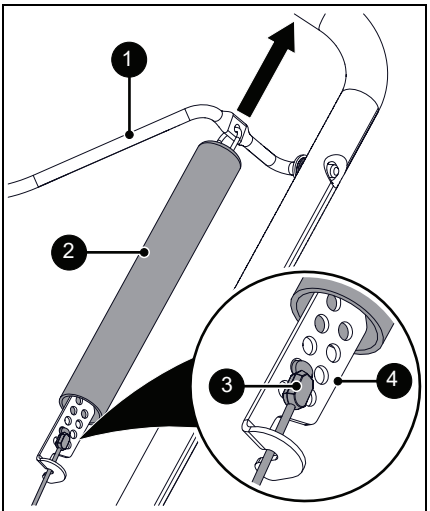

1. Auger Control Bar
2. Plastic Sleeve
3. Z-hook
4. Adjustment Bracket

Figure 18

6. Start engine and engage auger control bar to ensure proper operation.
7. Release auger control bar and ensure paddle rotation stops.

REPLACE BELT

1. Stop engine and wait for all moving parts to stop and for hot parts to cool.
2. Remove five tapping screws from belt cover and remove belt cover. Retain all parts. See Figure 19.

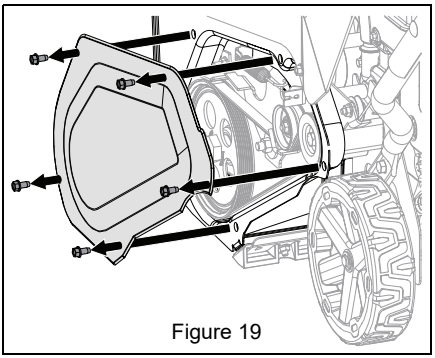

Figure 19

See Figure 20.

CAUTION: Use care when releasing idler spring tension. Keep body parts away from idlers when performing this operation.

3. Disconnect extension spring from idler arm.
4. Remove belt from drive pulley, idler and engine sheave.

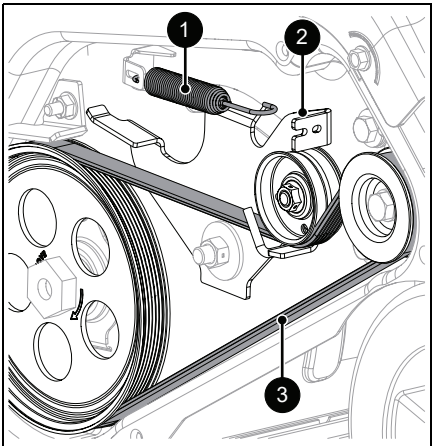

1. Extension Spring
2. Idler Arm
3. Drive Belt

Figure 20

5. Install new belt onto engine sheave, idler and drive pulley. Route belt between idler and belt finger on idler arm.
6. Reinstall extension spring.
7. Reinstall belt cover using original hardware.

ADJUST SCRAPER BLADE

NOTICE: The auger housing may be damaged if blade wears down excessively.

1. Stop engine and wait for all moving parts to stop and for hot parts to cool.
2. Place unit in service position. See *Service Position* on page 12.
3. Loosen hardware securing scraper blade to scraper support. See Figure 21.

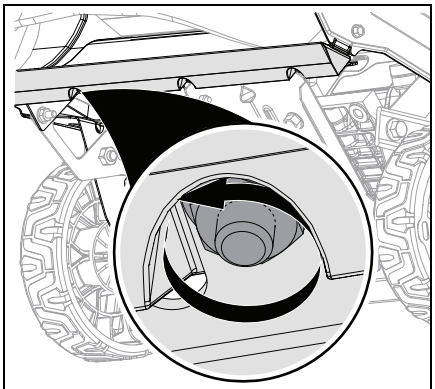

Figure 21

See Figure 22.

4. Adjust scraper blade:
   - Move scraper blade down to compensate for scraper blade wear and increase auger clearance.
   - Move scraper blade up to decrease auger clearance.
5. Tighten hardware and return unit to operating position.

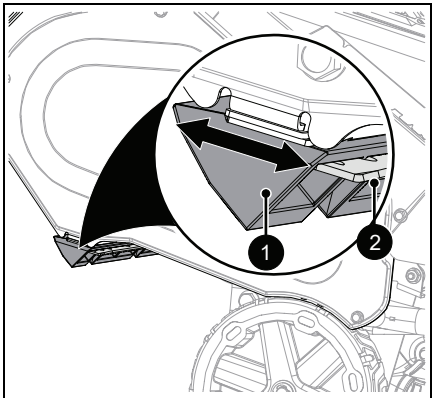

1. Scraper Blade
2. Scraper Support

Figure 22

REPLACE SCRAPER BLADE

1. Stop engine and wait for all moving parts to stop and for hot parts to cool.
2. Place unit in service position. See *Service Position* on page 12.

Remove Scraper Blade

See Figure 23.

1. Remove hardware retaining scraper support and scraper blade. Retain hardware and scraper support. Discard scraper blade.
2. Check condition of scraper support. Replace if worn or damaged.

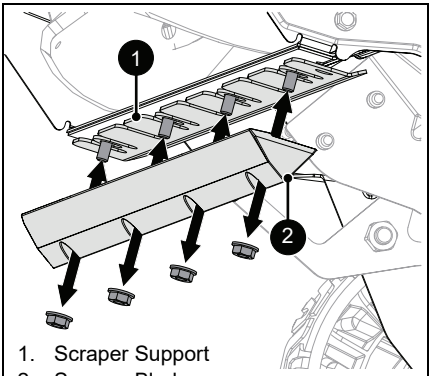

1. Scraper Support
2. Scraper Blade

Figure 23

Install Scraper Blade

See Figure 24.

1. Insert scraper support into new scraper blade. The D-shaped cutout must be on the left (drive belt side).
2. Position scraper assembly under housing.
   - D-shaped cutout must be on the left.
   - Edge must point down and forward.
   - Scraper assembly bolt holes must align with square bolt holes in auger housing.

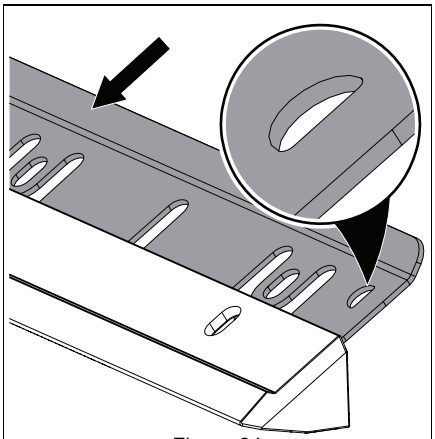

Figure 24

3. Move scraper assembly backward and up until small lip on top of scraper blade contacts bottom lip of housing. See Figure 25.

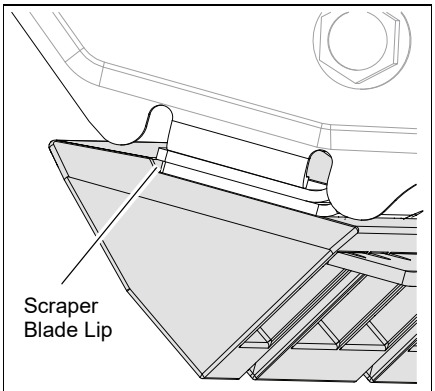

Figure 25

4. Reinstall scraper assembly using original hardware. Torque to 4.5 N•m – 5.7 N•m (40 lb-in – 50 lb-in). Bolt threads must protrude beyond the nut.
5. Return unit to operating position.

IMPORTANT: If auger paddles are pulling too strongly or scraper blade is not clearing completely, loosen nuts (do not remove) and slide scraper assembly down slightly. Tighten nuts.

STORAGE



WARNING: AVOID INJURY. Read and understand the *Safety* section before proceeding.

SHORT TERM

1. Engage auger momentarily to remove loose or melting snow to prevent auger shaft from freezing.
2. Tighten all hardware to correct specifications.
3. Inspect unit for visible signs of wear or damage. Repair as needed.
4. Apply a light layer of oil or anti-rust compound on bare metal areas.
5. Prepare fuel system for storage.

NOTICE: Ariens recommends using a quality fuel stabilizer in all fuel. Gasoline left in the fuel system without a stabilizer, even for short periods of time, deteriorates and leaves gummy deposits in the system that may damage the carburetor and fuel hoses, filter and tank. For the best effectiveness, add stabilizer to all fuel containers whenever purchasing fuel. Add the stabilizer to the container before adding fuel.

   a. Add Ariens fuel stabilizer (see *Service Parts* on page 13) or equivalent according to manufacturer's instructions to the fuel tank and any fuel containers with remaining fuel.
   b. Run engine outdoors for at least 5 minutes to allow stabilizer to reach the carburetor.

6. Close fuel valve and allow engine to stop on its own.
7. Remove engine key.
8. Store unit in a cool, dry, protected area. Do not store unit outdoors.

LONG TERM

1. Perform all short-term storage items.
2. Clean unit. See *Clean Unit* on page 13.
3. Touch up all scratched painted surfaces.
4. Store unit in a cool, dry, protected area. Do not store unit outdoors.

START-OF-SEASON FUEL PREPARATION

Before opening the fuel valve for the first time after long-term storage, add fresh, stabilizer-treated fuel to the fuel tank and any fuel containers with remaining fuel.

ACCESSORIES

See your Ariens dealer for a complete list of compatible accessories and attachments for your unit.

Description	Part No.
Sno-Thro Cover Kit	73801100
Protective Floor Mat	70716800
Maintenance Kit*	73801000
High Wear Auger Paddle Replacement Kit	73801200
120V Extension Cord Kit	70706600

*Includes 16 oz. 5W-30 engine oil, spark plug, fuel stabilizer and non-stick spray (Snow-Jet).

TROUBLESHOOTING

Problem	Probable Cause	Correction
Engine will not start.	Engine key in not in unit.	Insert key. See *Engine Key* on page 9.
	Fuel valve is closed.	Move fuel valve to open position. See *Fuel Valve* on page 9.
	Fuel tank is empty.	Fill fuel tank with fuel. See *Before Operating Unit* on page 10.
	Cord not plugged in (electric start models only).	Plug power cord in or replace worn cord. Reset circuit breaker.
	Engine is not primed.	If engine is cold, press primer bulb three times and start engine. DO NOT prime a warm engine. See *Primer Bulb* on page 9.
	Spark plug wire is disconnected.	Connect spark plug. Refer to engine manual.
	Choke is closed.	If engine is cold, move choke control lever to open position. DO NOT choke a warm engine. See *Choke Control Lever* on page 9.
	Excessive fuel in engine cylinder (flooded).	Move choke control lever to the off position and reattempt starting. See *Start Engine* on page 10.
	Spark plug is faulty.	Replace or clean spark plug. Refer to engine manual.
	Engine is faulty.	See your Ariens dealer.
Engine starts hard or runs poorly.	Fuel mixture is too rich.	Move choke control lever to off position. See *Choke Control Lever* on page 9.
	Spark plug is faulty, fouled, or incorrectly gapped.	Clean and correctly set spark plug gap (refer to engine manual) or see your Ariens dealer.
	Fuel cap vent is blocked.	Install new fuel cap.
Excessive vibration.	Loose parts or damaged auger paddles.	Check for loose or missing hardware or replace auger paddles. See *Replace Auger Paddles* on page 14.
Excessive snow is left behind.	Scraper blade is worn or damaged.	Adjust when worn and replace when damaged or when blade has been adjusted down as far as possible and does not touch ground or clear correctly. See *Adjust Scraper Blade* on page 16. See *Replace Scraper Blade* on page 16.
Snow does not discharge.	Auger drive belt is loose or damaged.	Replace belt or adjust auger control cable. See *Replace Belt* on page 15 and *Adjust Auger Cable on Page 15*. See your Ariens Dealer.
	Discharge chute is clogged with snow.	Stop engine and close fuel valve. Clean discharge chute and auger housing with a tool. DO NOT use your hands to clean discharge chute or auger housing.
	Auger paddles are worn or damaged.	Replace auger paddles. See *Replace Auger Paddles* on page 14.

SPECIFICATIONS		
Model Number	**938036**	**938037**
Model	Path-Pro Manual Chute	Path-Pro Remote Chute
Starter	Electric / Recoil	
Engine	Ariens AX212	
Gross Torque* – N•m (lb-ft)	13.5 (10)	
Displacement – cm^3 (in^3)	212 (12.9)	
Maximum RPM – No Load	3600 ± 100	
Oil Capacity: liter (pt)	0.55 (1.16)	
Fuel Tank Capacity: liter (qt)	2.6 (2.7)	
Fuel Octane Rating	See Engine Manual	
Size and Weight		
Length: cm (in.)	138.4 (54.5)	
Width: cm (in.)	54.6 (21.5)	
Height: cm (in.)	105.7 (41.6)	
Weight: kg (lbs.)	42 (92.6)	43.4 (95.6)

Outdoor Power Equipment Limited Warranty

AriensCo warrants to the **original purchaser** that Ariens® brand products purchased on or after 09/01/2022 will be free from defects in material and workmanship for the time period noted in the chart below. Equipment put to personal use around a single household or residence is considered “Residential Use.” Equipment put to any business use (agricultural, commercial, or industrial) or used at multiple locations is considered “Commercial Use.” If any product is rented or leased, then the duration of these warranties shall be 90 days after the date of purchase.

An authorized Ariens dealer will repair any defect in material or workmanship, and repair or replace any defective part, subject to the conditions, limitations and exclusions set forth herein. Such repair or replacement will be free of charge (labor and parts) to the original purchaser; except as noted below. Pick-up and delivery are at the owner’s expense.

The warranty code is found on the model and serial number identification label on the unit.

Warranty Code	Product Group	Warranty Period
AA	Serialized Attachments	1 Year.
CH, CQ	ZENITH Mowers	4 Years or 750 Hours.*
CL	ARROW Mowers	5 Years or 1000 Hours.* No Hour Limit for First 2 Years.
HD	RAZOR Walk-Behind Mowers	3 Years Residential Use. 90 Days Commercial Use.
HE	EDGE Mowers	2 Years or 150 Hours.*
HF	IKON Mowers	3 Years or 300 Hours.*
HG	RIDGELINE® Mowers	4 Years or 400 Hours.*
HH	APEX® Mowers	4 Years or 500 Hours.*
HI	RAZOR Walk-Behind Mowers	4 Years Residential Use. 90 Days Commercial Use.
HJ	EDGE LT Mowers	2 Years Residential Use. No Commercial Warranty.
PA	921-Series Brushes	3 Years Residential Use. 90 Days Commercial Use.
PB	926-Series Brushes	3 Years Residential Use. 1 Year Commercial Use.
SA	Professional Sno-Thro®	3 Years Residential Use. 1 Year Commercial Use.
SB	Compact, Deluxe and Platinum Sno-Thro and Path-Pro	3 Years Residential Use. 90 Days Commercial Use.
SC	S18	2 Years Residential Use. 90 Days Commercial Use.
SD	Deluxe and Platinum EFI Sno-Thro	3 Years Residential Use. 90 Days Commercial Use.
SE	920-Series Classic Sno-Thro	3 Years Residential Use. 90 Days Commercial Use.
SF	MAMMOTH® Tractor	2 Years or 500 Hours.*

* Whichever comes first.

Special Extensions

The chart below details special **extensions** to warranty terms. Warranty terms are total time periods covered. If any product is rented or leased, there are no extensions to the 90-day warranty.

Warranty Code	Warranty Term Extension	Warranty Period	Detail
SA	Cast Iron Auger Gear Case	5 Years.	Warranty is for parts only after the initial warranty period. Components are covered for manufacturer’s defect only, not wear.
SB, SD	Cast Iron Auger Gear Case	5 Years Residential Use. 1 Year Commercial Use.	
CL	Mower Deck Shell and Main Frame	Lifetime Limited.	

Exclusions and Limitations

The charts below detail special **exclusions and limitations** to this warranty.

Warranty Term Exclusions	Warranty Period
Air filters, auger paddles, brake arms, brake linings, brake shoes, brushes, cutters, fuel filters, halogen headlights, knives, halogen light bulbs, lubricants, mower blades, oil, oil filters, spark plugs, scraper blades, shear bolts and skid shoes.	Components are not covered under warranty.

Hydro-Gear Transaxle Limitation
See Hydro-Gear warranty. The warranty is administrated by AriensCo. Refer to www.ariens.com for warranty statement.

Warranty Term Limitations	Warranty Period
Cloth, Plastic and Rubber Components. Mufflers, Tires and Belts.	Components are covered for manufacturer's defect only, not wear.
Parker Actuators	1 Year.

Exclusions – Items Not Covered by This Warranty

- Parts that are not genuine Ariens service parts are not covered by this warranty and may void the warranty if the parts result in premature wear or damage to the product.
- Damages resulting from the installation or use of any part, accessory, or attachment which is not approved by AriensCo for use with product(s) identified herein are not covered by this warranty.
- Any misuse, alteration, improper assembly, improper adjustment, neglect, or accident which requires repair is not covered by this warranty.
- Repairs or adjustments required due to failure to use fresh fuel or failure to properly prepare the unit for periods of non-use.
- **Use of gasoline blends exceeding 10% ethanol voids any and all warranties.**
- **Any tampering with the hour meter voids any and all warranties.**
- Products are designed to the specifications in the area that the product was originally distributed. Different areas may have significantly different legal and design requirements. This warranty is limited to the requirements in the area in which the unit was originally distributed. AriensCo does not warrant this product to the requirements of any other area. Warranty service is limited to service within the area originally distributed.
- In countries other than the United States and Canada, contact the AriensCo dealer for warranty policies that govern within your country. Rights may vary from country to country and within any one country.

Evaporative Emissions Control Warranty Exception

As required by the California Air Resources Board (CARB) and the US Environmental Protection Agency (EPA) the evaporative emissions control system is warranted to the ultimate purchaser, and any subsequent owner, for two years.

The CARB and EPA evaporative emissions control system warranty is described in a separate evaporative emission control warranty statement.

Battery Warranty

Battery warranty is one year. Units used for rental or lease have no exceptions to the 90-day warranty. Total battery claim reimbursement will not exceed 65.00 USD.

Transmissions

The chart below details transmission warranty information. Transmission warranty terms may vary from the specific terms of this warranty. If inconsistent, the terms of the transmission warranty shall apply to the transmission and its component parts.

Transmission Manufacturer	Detail
Hydro-Gear Transaxle	See Hydro-Gear warranty. The warranty is administrated by AriensCo. Refer to www.ariens.com for warranty statement.
Parker Hannifin Drive & Valve Systems	Parker Transaxles, Pumps, Wheel Motors and Valves* are warranted for the length of equipment warranty period. Refer to Warranty Code chart above. Warranty is administered by AriensCo.

* Parker Actuators see Limitations chart above.

Engines

The chart below details engine warranty information. Engine warranty terms may vary from the specific terms of this warranty. If inconsistent, the terms of the engine warranty shall apply to the engine and its component parts.

Engine Manufacturer	Detail
Ariens AX	Ariens-branded engines are warranted by the manufacturer and the warranty is administrated by AriensCo. Refer to the engine manual or www.ariens.com for warranty statements.
Briggs & Stratton, Kawasaki, Kohler	Covered by the engine manufacturer's warranty. Refer to the engine manufacturer's warranty statements.

Parts and Accessories

Service replacement parts and non-serialized accessories are warranted for 90 days from date of purchase. Labor is not included.

Customer Responsibilities

Register the product immediately at the time of sale. If the dealer does not register the product, the customer must register the unit on-line at www.ariens.com.

To obtain warranty service, the **original purchaser** must:

- Ensure that the maintenance and adjustments explained in the Operator's Manual are routinely completed.
- Promptly notify AriensCo or an authorized Ariens service representative of the need for warranty service.
- Transport the product to and from the place of warranty service at owner's expense.
- Have the warranty service performed by an authorized Ariens service representative.

To find an authorized dealer use the dealer locator on our websites, or contact us by mail or phone.

Globally (Except Australia or New Zealand):	Australia:	New Zealand:
AriensCo 655 W. Ryan Street Brillion, WI 54110 Phone: (920) 756 - 4688 www.ariens.com	Roy Gripske & Sons Pty Ltd 11 Sodium Street Narangba Queensland 4504 Australia Phone: (61130) 036 3004 www.rgs.com.au	Masport Ltd 320 Ti Rakau Drive East Tamaki Auckland 2013 New Zealand Phone: 0800 627 7678 www.masport.co.nz

Disclaimer

AriensCo may from time to time change the design of its products. Nothing contained in this warranty shall be construed as obligating the AriensCo to incorporate such design changes into previously manufactured products, nor shall such changes be construed as an admission that previous designs were defective.

Limitation of Remedy and Damages

AriensCo liability under this warranty, and under any implied warranty that may exist, is limited to repair of any defect in workmanship, and repair or replacement of any defective part. AriensCo shall not be liable for incidental, special, or consequential damages (including lost profits). Some states do not allow the exclusion of incidental or consequential damages, so the above limitation or exclusion may not apply to you.

AriensCo shall not be held liable for damages, including premature wear and tear, or injuries caused by installation of unauthorized parts and accessories or for parts and accessories not installed by an authorized Ariens dealer.

Australian Consumer Law

The following applies solely to warranties subject to Subsection 102(1) of the Australian Consumer Law: Our goods come with guarantees that cannot be excluded by the Australian Consumer Law. You are entitled to a replacement or refund for a major failure and for compensation for any other reasonably foreseeable loss or damage. You are also entitled to have the goods repaired or replaced if the goods fail to be of acceptable quality and failure does not amount to a major failure.

Disclaimer of Further Warranty

AriensCo makes no warranty, express or implied, other than what is expressly made in this warranty. If the law of your state provides that an implied warranty of merchantability, or an implied warranty of fitness for particular purpose, or any other implied warranty, applies to AriensCo, then any such implied warranty is limited to the duration of this warranty. Some states do not allow limitations on how long an implied warranty lasts, so the above limitation may not apply to you.

This warranty gives you specific legal rights, and you may also have other rights which vary from region to region.

ARIENS

655 WEST RYAN ST.
BRILLION, WI 54110

WWW.ARIENS.COM

SEE PARTS, ACCESSORIES, AND ATTACHMENTS FOR YOUR UNIT AT PARTS.ARIENS.COM.

A PARTS MANUAL FOR YOUR UNIT IS AVAILABLE FOR FREE DOWNLOAD OR PURCHASE AT ARIENS.COM.

WARNING: Cancer and Reproductive Harm - www.P65Warnings.ca.gov

ARIENS|CO