

TC-1241EW-AI
Quick Start Guide

Version 1.0.0
February 2nd, 2023

Contents

Overview....3
Installation....3
Initialization....4
Playback....5
Motion Detection....6
Email Alerts....7
Using Thermal AI Features....8
How To Upgrade System Firmware....8
FCC Statement....12
References & Contact Information....12

Welcome

Thank you for purchasing an Amcrest camera!

This document provides a quick setup and overview of your device and its features. **For access to a full user manual or further information regarding your device please visit:** http://amcrest.com/support

Important Safeguards and Warnings

- All installation and operations of the device should conform to your local electrical safety codes.
- We assume no liability or responsibility for any of the fires or electrical shocks caused by improper handling or installation.
- We are not liable for any problems caused by unauthorized modifications or attempted repair.
- Handle with care, avoid from dropping or placing the device in unsecure areas.

Overview

This hybrid thermal camera offers 2 separate channels, a thermal channel and a visible channel for dual image fusion. It offers various AI functions such as IVS for increased perimeter protection, call detection, smoking detection, and other features necessary for short-distance protection and monitoring. The device is perfect for factories, parking lots, villas, and more.

The camera features 1 IR LED which allows the camera to detect objects from up to 98ft away as well as a designated warning light that can be set to flash and act as a deterrent once certain rules are triggered. The camera can be accessed in most mainstream web browsers however, for optimal use, it is highly recommended to **use IE mode in Microsoft Edge** as most options and smart thermal features require the use of a .exe plugin. However, the camera features flexible storage options to store recordings to a microSD card (up to 256GB) or SFTP/FTP, all these features can be accessed and customized using a web browser.

Installation

Before setting up your camera, please ensure the installation surface can support at least 3 times the weight of the camera.

MicroSD Card Installation

The camera is compatible with up to a 256GB microSD card. Please make sure the microSD card is rated class 10 or above and properly formatted before installing into the camera.

1. Remove the hatch on the camera and locate the microSD card slot.
2. Insert the microSD card into the slot and press in to secure.
3. Place the hatch back onto the camera and tightly secure.

Camera Installation

Included with your camera is an installation bracket that can be used to mount your camera to an installation surface. As stated, please make sure the installation surface can support at least 3 times the weight of the bracket and camera. For more information, please refer to the installation guide included with this device.

Note: When installing the camera, please make sure to position the viewing angle of the camera in a manner that is optimal for capturing thermal data. A junction box or wall mount can be applied however will be sold separately.

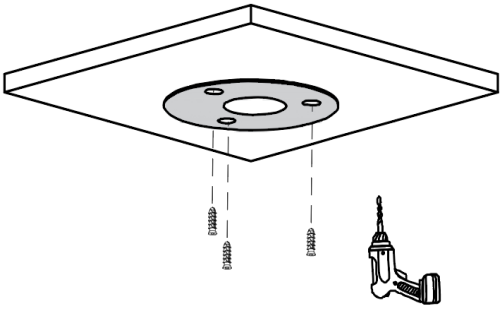	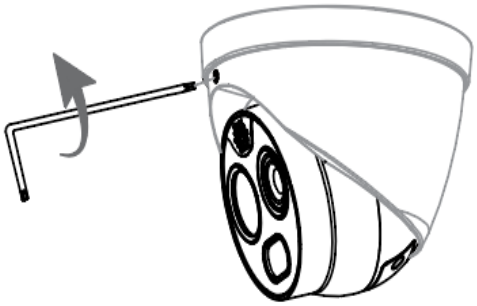
1. Apply the installation sticker to the mounting surface. Use a drill head to drill the holes on the sticker and insert the wall anchors. Please note, a 1" paddle bit can be used to run any cabling through the surface.	2. Use the included torx wrench to remove the camera from the installation bracket.
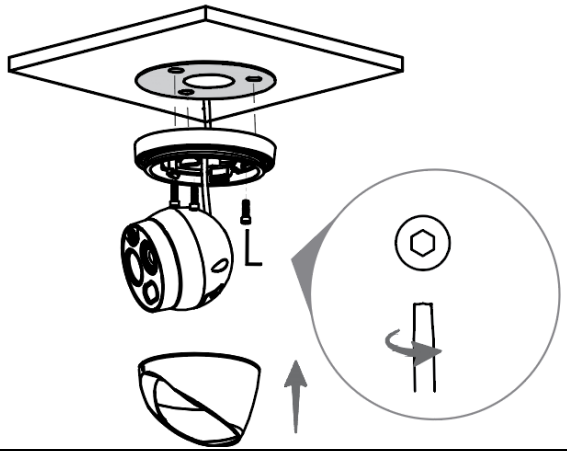	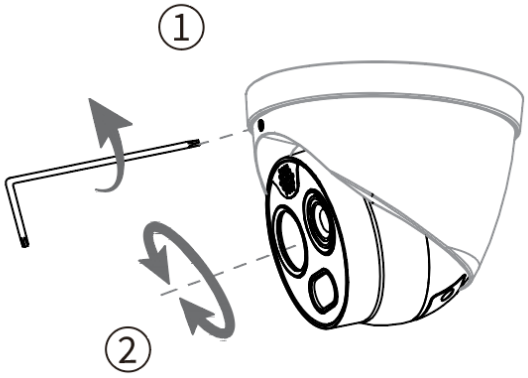
3. Align the holes of the installation bracket to the holes provided on the installation sticker and wall anchors. Connect any wiring, apply the installation bracket to the surface and secure using the provided installation screws. Place the turret cover over the camera.	4. Adjust the camera to a desired position and use the torx wrench to secure the camera to the installation bracket.

Initialization

The camera can be accessed in a web browser using an IP address. The IP address for your camera can be located using the Amcrest IP config tool, before locating the IP address, please make sure the camera and the computer are on the same network. To download the Amcrest IP config tool, please visit **amcrest.com/downloads** and download the IP config software.

After obtaining the IP address, the camera can be viewed using most mainstream web browsers, such as Google Chrome, Firefox, Safari, Microsoft Edge, etc., however most thermal features will require the use of a .exe plugin. **For an optimal experience it is highly recommended to use IE mode in Edge or other browser option that supports this function**. Please ensure all plugins are allowed and running before initialization is complete. To begin, enter the IP address for your camera into the browser.

Enter the a unique password for the camera into the modify password menu and click Save. This will be the password used to access your camera, the default username will be admin. Once the password has been entered, you will be directed to the live view interface.

Live View

The live view interface allows you to view and monitor real time visual and thermal data detected by the camera. These feeds will be represented as separate channels within the camera.

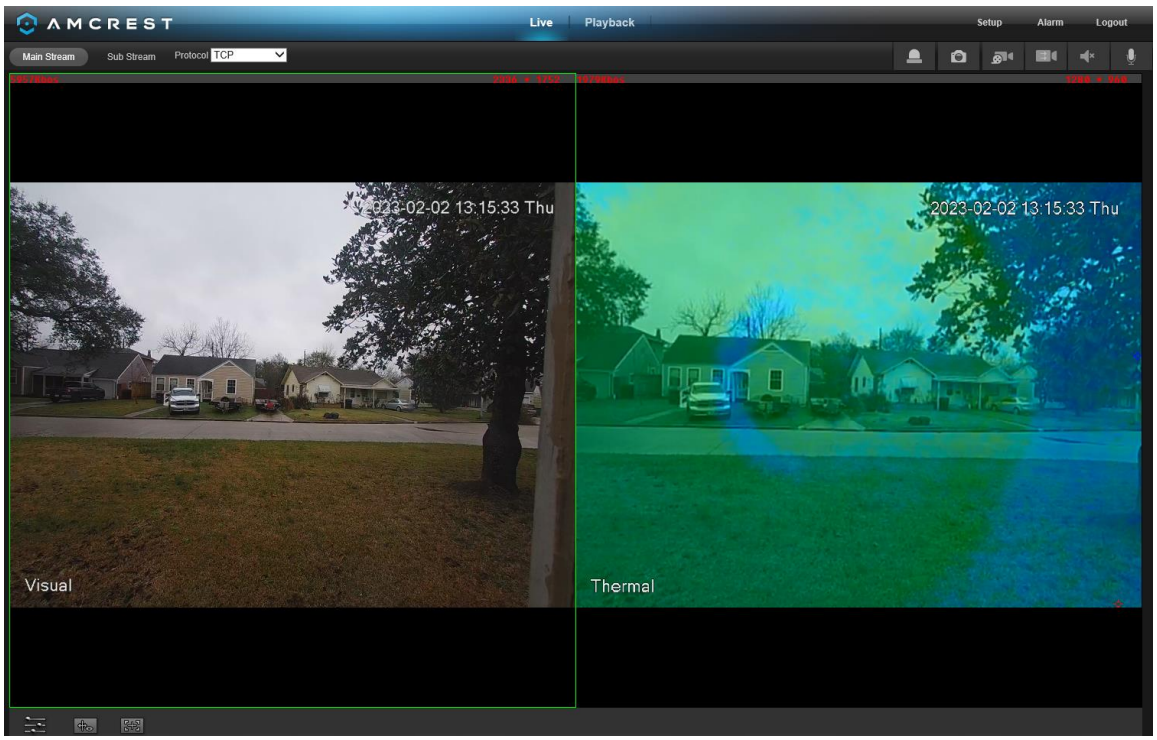

Playback

The playback menu allows the user to search and view events captured by the camera. This includes motion detection and continuous recording events. Please make sure a microSD card is inserted into the camera before using this feature.

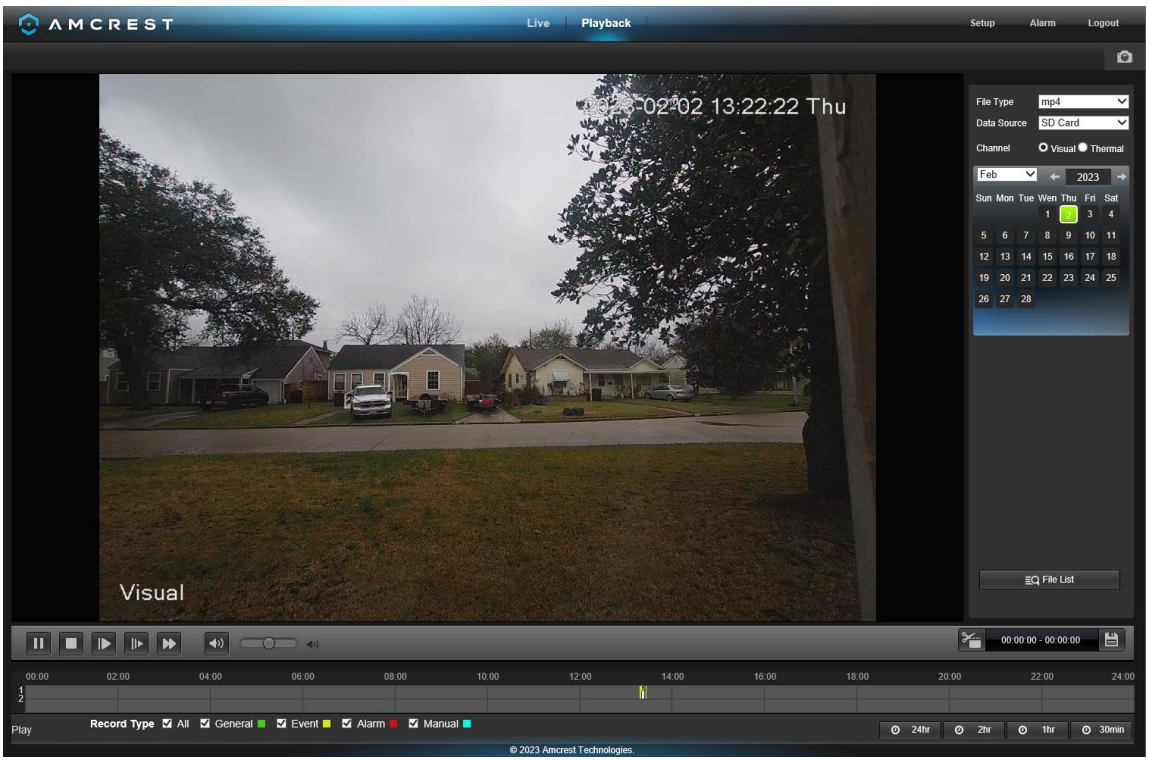

The events retained in this menu can be related to both visual and thermal events. By default, the file list will be set to view visual events, however, to view thermal events, select the **Thermal** option located in the channel field. Please note, files related to thermal AI events will be indicated as red, motion detection events will be yellow, and continuous recordings will be green.

Use the included calendar to select a date of the events. Please note, days with data applied to them will be highlighted green. Click on File List to display the events in the file list, double click on the event to view it. To download an event, click the download icon and allow the event to download to your computer. Please note, events will be stored to the file path destination displayed in the **Path** menu of the device. For more details on playback, please visit amcrest.com/support.

Motion Detection

The camera will be set to record both channels by default once an event is detected. However, certain features, such as email alerts, can be enabled which can allow snapshots of the motion detection events to be emailed after it has been detected. To access the motion detection menu, click **Setup>>Event>>Video Detection** to access the motion detection tab.

A motion detection schedule can be enabled as well which will allow the camera only to trigger motion events at specific points in the day. To create a motion detection schedule, click the **Setting** option next to schedule. A total of 6 periods can apply to a schedule. To apply each time to all days of the week, select **Copy All**.

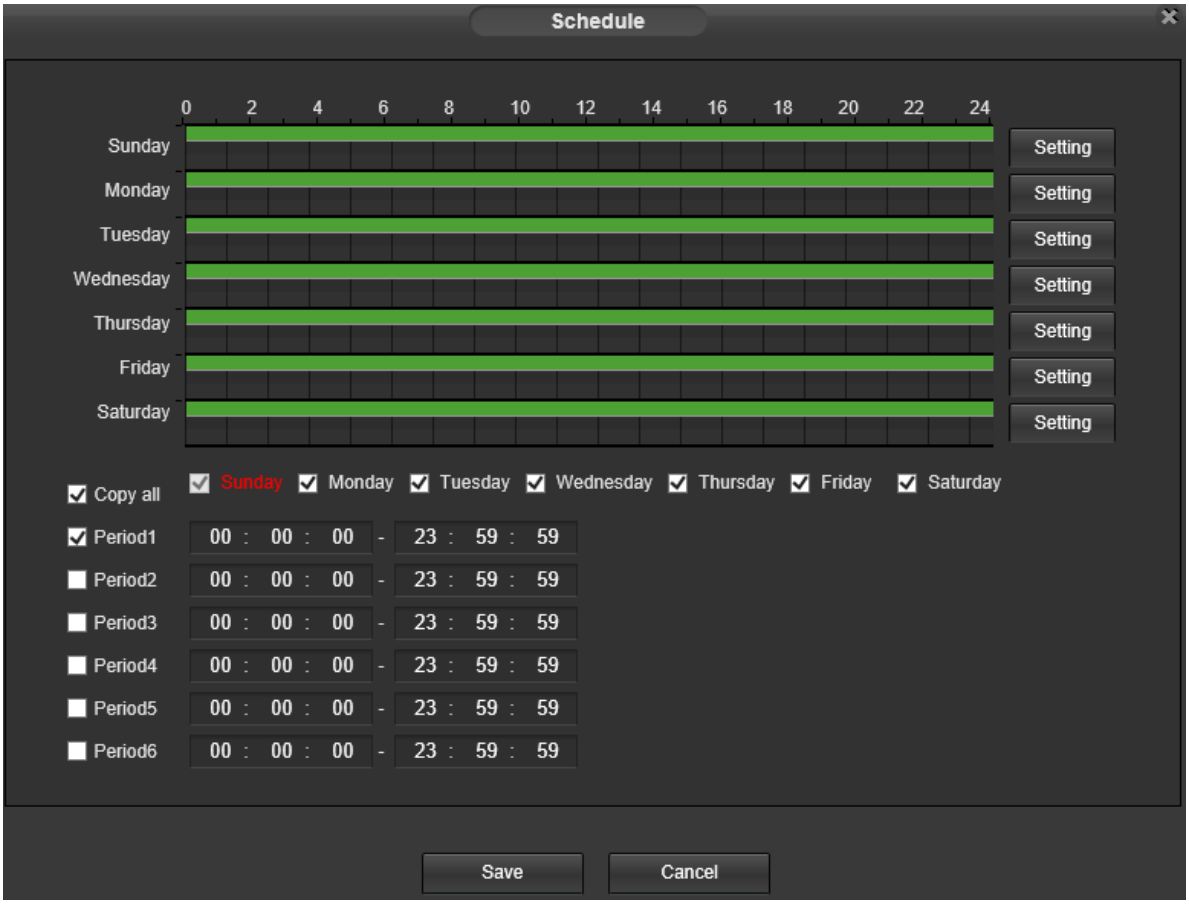

By default, motion detection will be set to trigger 24/7 however, however to just this, select a specific day from the list, select a time bar from this selection and use your mouse to adjust the

time accordingly. Click **Save** to save and apply the motion detection schedule. If any adjustments have been made, click **Save**.

Email Alerts

The email alerts option provides a solution that will allow you to receive email notifications of any motion detection, AI events, or other features are triggered. A snapshot of the event can be emailed after a valid email address has been registered in the system. Please note, in this example we are using Gmail.

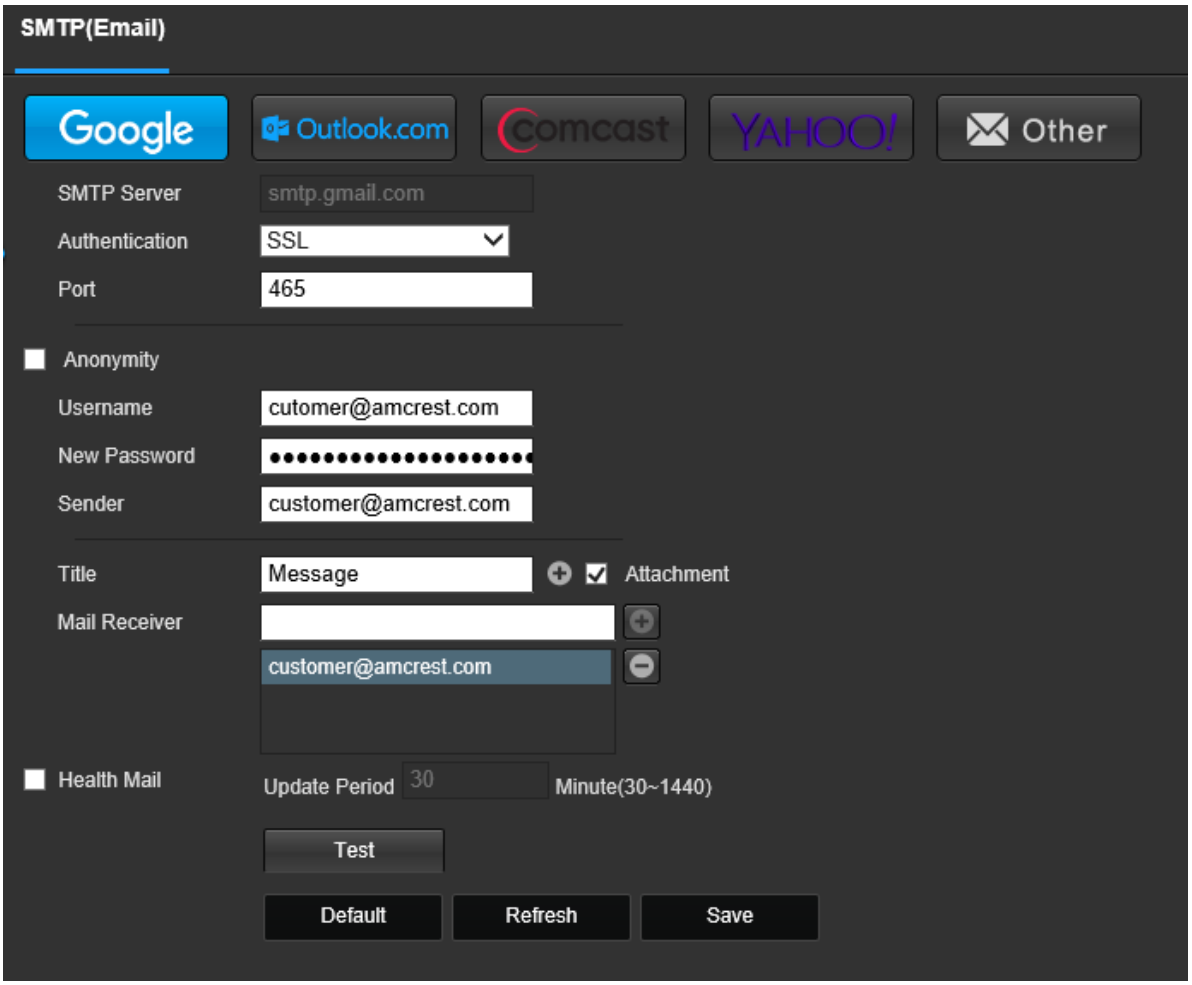

1. Navigate to **Setup>>Network>>Email(SMTP)**
2. Select your email provider, which in this case is Google. The SMTP server, authentication, and port number will be imported for you.
3. Enter the email address into the username field.
4. Enter a generated password (provided by Google) for your email address into the password field. To obtain this password, access your Gmail account and select **Manage Your Google Account**. Select **Security** and click on **App passwords** (please make sure 2-factor authentication is established before entering). Enter the password for your email and click **Next**. Select the Custom option, enter a name for the authentication, and click **Generate**. Use this password for email alerts.
5. Enter the email address of the sender into the **Sender** field.
6. Enter the email address of the receiver into the **Mail Receiver** field and click the "+" button to import.
7. Click **Save**, then click **Test** to test the connection.

Using Thermal AI Features

The camera comes equipped with the following AI features, IVS, fire detection, call detection, smoking detection, hot trace, and picture in picture. An activated warning light can be activated once an AI rule is triggered. For more information on these features please refer to the table provided below.

Feature	Description
Smart Plan	Acts as a 'master switch' for AI features. Each smart plan is applicable to specific channels inside the camera and must be enabled for the feature to properly function excluding fire detection, hot trace, and picture-in-picture.
IVS	IVS features, such as tripwire and intrusion, are used to enhance perimeter protection. These features are setup using the visual channel.
Fire Detection	This feature allows the camera to detect high heat in the area. By default, anti-jamming mode will be enabled which allows the camera to only exclude objects with continuous levels of high temperatures such as a boiler or similar object. However, high response mode can also be enabled which allows the camera to detect any fire danger detected by the camera.
Call Detection	This feature allows the camera to trigger an event if a person in the frame is actively using a cell phone.
Smoking Detection	This feature allows the camera to trigger an event If it detects a human in the frame lighting an object such as a cigarette, cigar, etc. This rule can only be activated on the thermal channel (channel 2) in the smart plan menu.
Hot Trace	This feature allows the user to enable a color palette for the thermal channel automatically or manually. If using a manual hot trace, use the high CTMaker Color and Low CTMaker Color dropdown menus to select a color for these thermal readings.
Picture-in-Picture	This feature allows the user to enable or disable a thermal image to be displayed in the visual feed.

When enabling an AI feature, a smart plan must be saved and applied in the system. Features such as fire detection, hot trace, and picture-in-picture do not require a smart plan. For more information on the features included with this device please visit, amcrest.com/support.

How To Upgrade System Firmware

Keeping the firmware on your camera up to date is an important part of overall system health. For security purposes, it is highly recommended to upgrade the firmware on your device every time a new firmware is available. To locate the most up to date firmware for your device please visit https://amcrest.com/firmware

1. Download the .bin file for your camera from https://amcrest.com/firmware
2. Open your camera in a web browser and navigate to Setup>> System>>Upgrade.
3. Click Import and locate the .bin file on your computer.
4. Click Upgrade and allow the camera to upgrade.

Accessing the Web User Interface Remotely

For the purposes of this guide, we will outline the most common method for setting up web access. Port forwarding using the HTTP protocol and using Dynamic Domain Name Server (DDNS) is the easiest way to setup stable remote access.

For this method, you should have direct access to your router as well as the ability to port forward the device using the router's built-in interface. Below is a step-by-step walk through those details how to setup the camera for remote web access using DDNS.

1. Log into the web UI and navigate to **Setup>>Network>>Connection**.

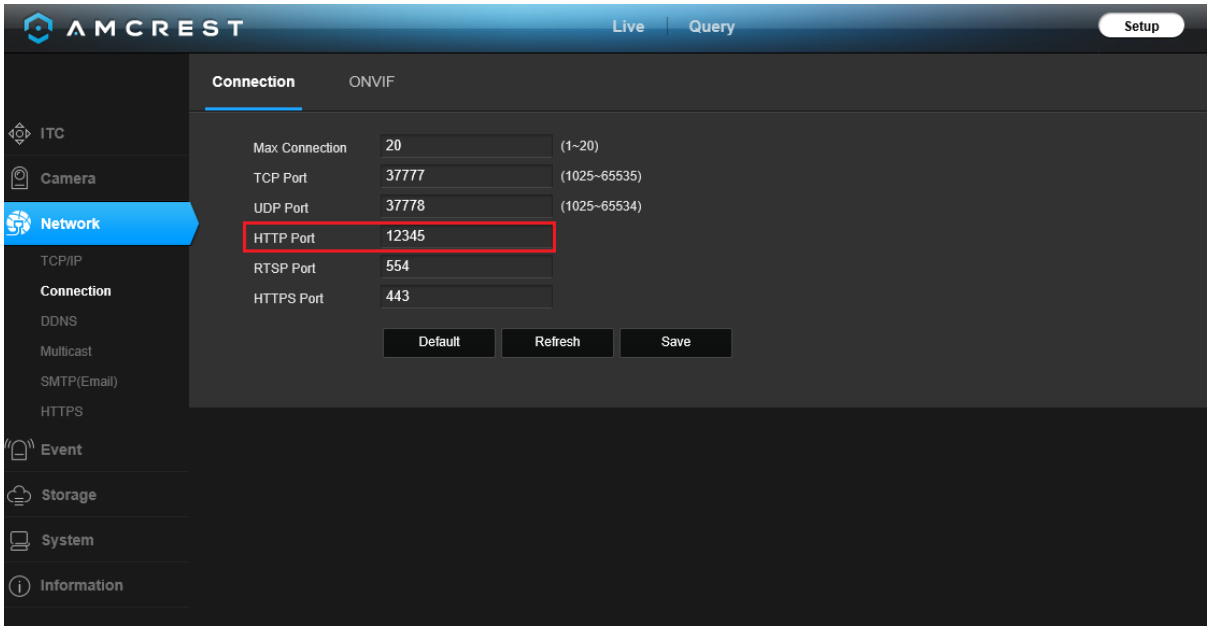

It is recommended to ensure the port number is at least 5 digits long to prevent any port conflicts. You can change the port to any 5-digit number that is less than 65535 (e.g.12345) by clicking the number field and entering a new port number. Write it down, then click **Save**.

2. The system will need to reboot for this change to take effect. Click **OK**.

3. Once the camera has come back online, log back into the web UI and navigate back to the Connection menu to verify the HTTP port has been updated properly.

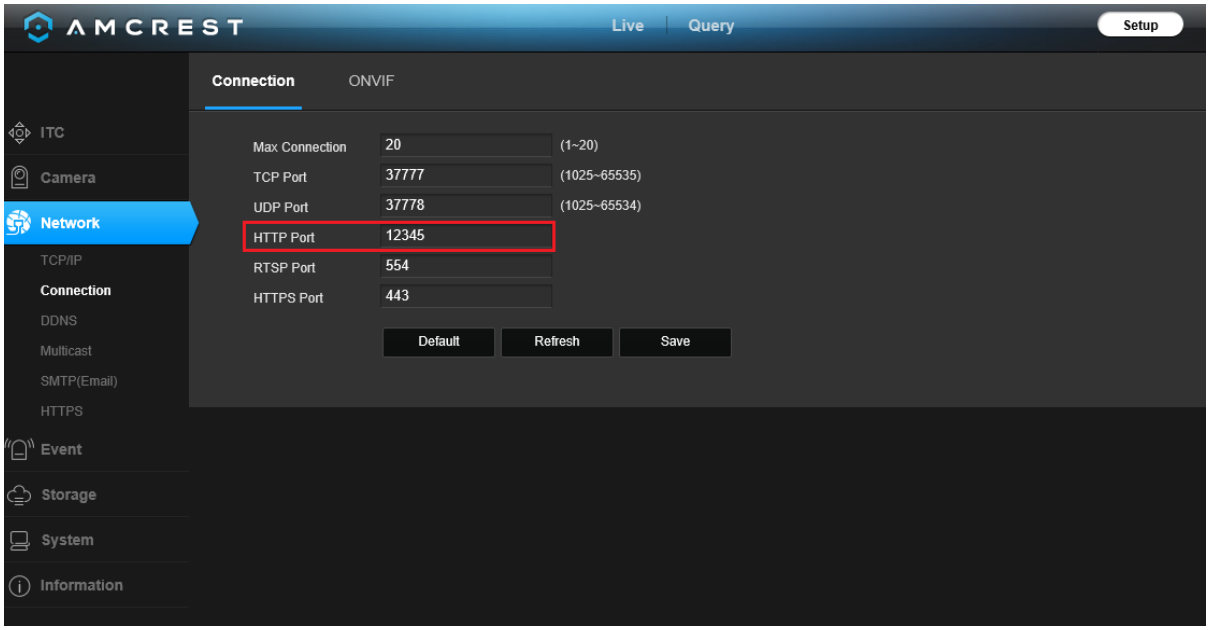

4. Access your router's user interface and port forward the device using the HTTP port information displayed in the system. Every router's port forwarding protocols are unique. For more information on how to port forward your specific device, please visit portforward.com or refer to the user manual for your specific router.

Note: When port forwarding the camera in your router, make sure to use the TCP, UDP and updated HTTP protocols displayed in the camera. If DDNS is not an option, the device can be accessed remotely using the public IP address for your network and the HTTP port used that was port forwarded in your router. To locate your public IP address and verify the connectivity of your system, please visit: canyouseeme.org

5. Click on the **DDNS** menu located in the **Network** tab. In the DDNS menu, click on the **Type** checkbox to enable DDNS. Make sure the **AMCREST DDNS** type is selected and a host name for the camera (one you create) is entered in the HostName field. As an example, the hostname will be in the following format: mynewcamera.amcrestddns.com

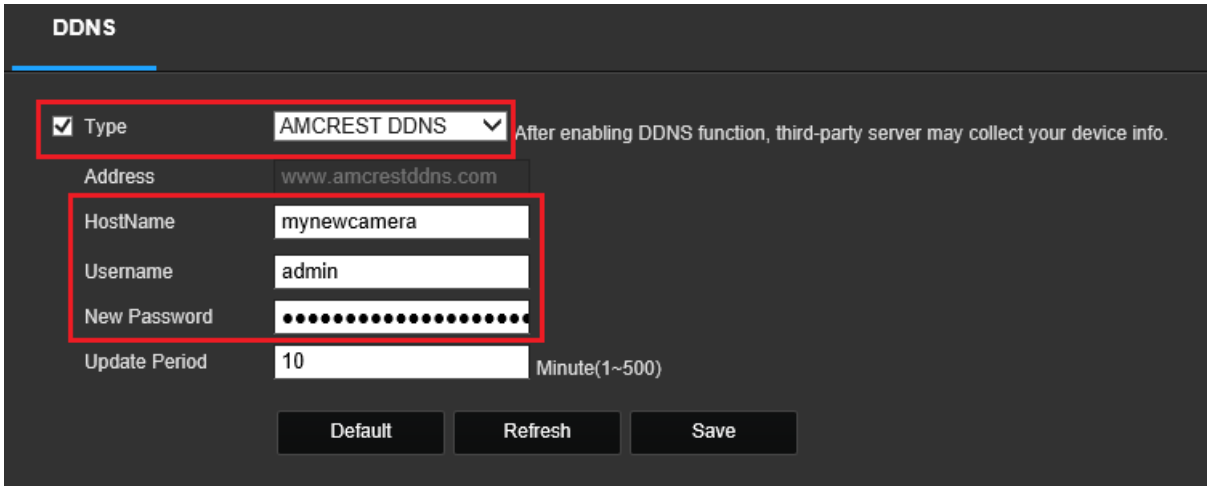

Enter the username and password and click **Save**.

Accessing the Device Remotely

After setting up the camera in the previous steps provided, open a web browser and enter in the DDNS domain name address previously setup for your CAMERA.

For example, if the DDNS domain name is http://abc123456789.amcrestddns.com and your HTTP Port is 12345, the URL would be http://abc123456789.amcrestddns.com:12345

Amcrest View Pro App Setup

The thermal camera can be added to the Amcrest View Pro app if needed, however, is only applicable to **live view and playback**. The app can playback the visual or thermal channel if needed.

The Amcrest View Pro app can be downloaded in both the App Store and Play Store.

The following steps will continue the app setup process for an Android phone and, though the iPhone version of the app has slightly different steps, most of this process is identical and easy. Download and install the Amcrest View Pro app for the App Store or Google Play Store.

Open the app on your mobile device and allow the app to load.

<table>
<tr>
<td>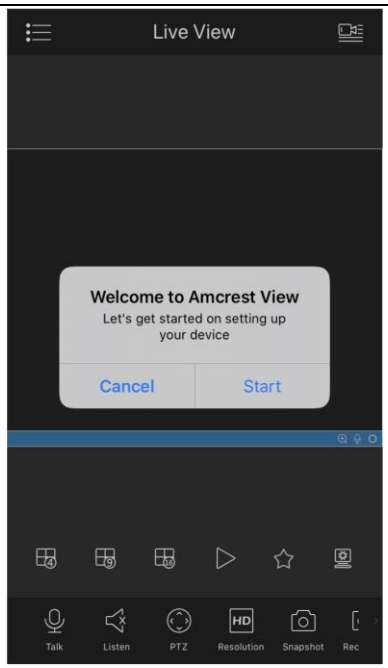
</td>
<td>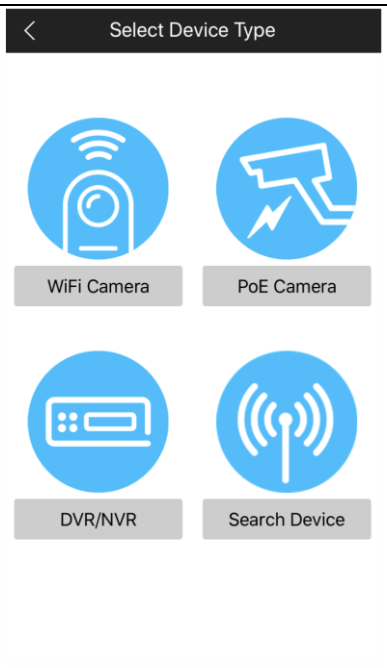
</td>
<td>
</td>
</tr>
<tr>
<td>3. Tap “Start”.</td>
<td>4. Tap “POE Camera”</td>
<td>5. Tap “P2P Connection”
Note: IP/Domain/DDNS can be used to establish a DDNS connection. For more information on how to setup a DDNS connection please visit https://amcrest.com/support</td>
</tr>
<tr>
<td>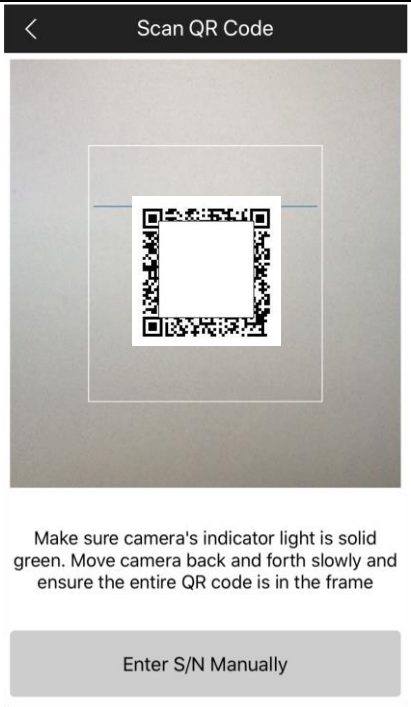
</td>
<td>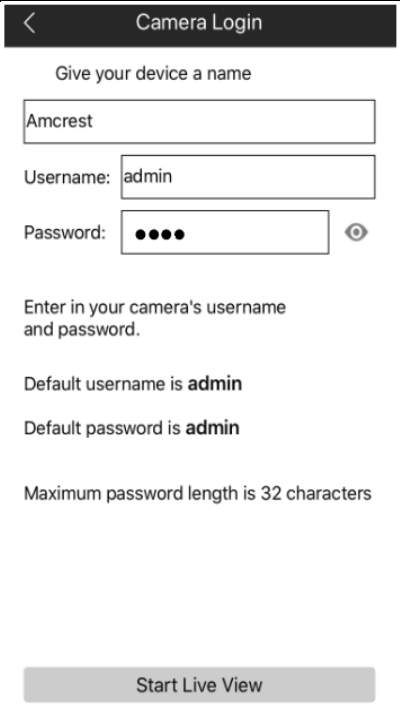
</td>
<td>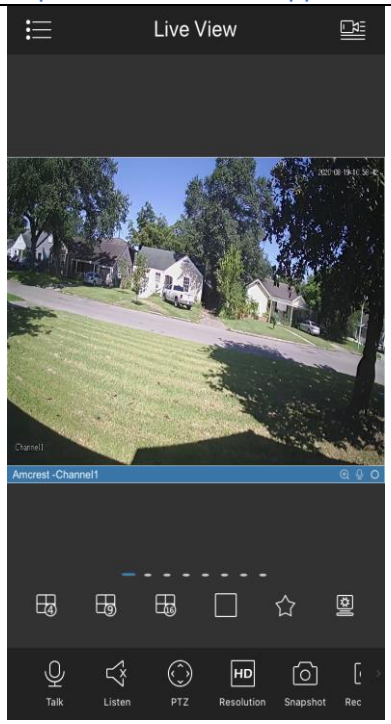
</td>
</tr>
<tr>
<td>6. Scan the QR code. The QR code can be found on the serial tag along with the scannable barcode.</td>
<td>7. Create a name for the device and enter a username and password. The default username and password will be admin. Tap “Start Live View”.</td>
<td>8. Update the default password for the device and tap “Start Live View” to access the device in the app.</td>
</tr>
</table>

For more information regarding the Amcrest View Pro app, please visit:
https://amcrest.com/support

FCC Statement

1. This device complies with Part 15 of the FCC Rules. Operation is subject to the following two conditions: (1) this device may not cause harmful interference, and (2) this device must accept any interference received, including interference that may cause undesired operation.
2. The user's manual or instruction manual for an intentional or unintentional radiator shall caution the user that changes, or modifications not expressly approved by the party responsible for compliance could void the user's authority to operate the equipment. In cases where the manual is provided only in a form other than paper, such as on a computer disk or over the Internet, the information required by this section may be included in the manual in that alternative form, provided the user can reasonably be expected to have the capability to access information in that form.
3. (b) For a Class B digital device or peripheral, the instructions furnished the user shall include the following or similar statement, placed in a prominent location in the text of the manual: NOTE: This equipment has been tested and found to comply with the limits for a Class B digital device, pursuant to Part 15 of the FCC Rules. These limits are designed to provide reasonable protection against harmful interference in a residential installation. This equipment generates, uses and can radiate radio frequency energy and, if not installed and used in accordance with the instructions, may cause harmful interference to radio communications. However, there is no guarantee that interference will not occur in a particular installation. If this equipment does cause harmful interference to radio or television reception, which can be determined by turning the equipment off and on, the user is encouraged to try to correct the interference by one or more of the following measures:

-- Reorient or relocate the receiving antenna.
-- Increase the separation between the equipment and receiver.
-- Connect the equipment into an outlet on a circuit different from that to which the receiver is connected. -- Consult the dealer or an experienced radio/TV technician for help.

4. RF exposure warning

This equipment must be installed and operated in accordance with provided instructions and the antenna(s) used for this transmitter must be installed to provide a separation distance of at least 20 cm from all persons and must not be co-located or operating in conjunction with any other antenna or transmitter. End-users and installers must be provided with antenna installation instructions and transmitter operating conditions for satisfying RF exposure compliance.

References & Contact Information

To view setup videos for many of the steps outlined in this guide, go to http://amcrest.com/videos
For more supplemental information, a **full user manual**, or to view articles related to your device visit http://amcrest.com/support

For contact information please visit us at https://amcrest.com/contact or reach out to us directly at 1-888-212-7538

This quick start guide is for reference only. Slight differences may be found in the user interface.

All the designs and software here are subject to change without prior written notice.
All trademarks and registered trademarks mentioned are the properties of their respective owners.