

IP4M-1062EW-AI
Quick Start Guide

Version 1.0.0
November 25th, 2022

Contents

Overview 3
Installation 3
Initialization 5
Query 6
Email Alerts 8
How To Upgrade System Firmware 9
FCC Statement 13
References & Contact Information 13

Welcome

Thank you for purchasing an Amcrest LPR camera!

This document provides a quick setup and overview of your device and its features. **For access to a full user manual or further information regarding your device please visit:** http://amcrest.com/support

Important Safeguards and Warnings

- All installation and operations of the device should conform to your local electrical safety codes.
- We assume no liability or responsibility for any of the fires or electrical shocks caused by improper handling or installation.
- We are not liable for any problems caused by unauthorized modifications or attempted repair.
- Handle with care, avoid from dropping or placing the device in unsecure areas.

Overview

This fixed lens license plate reader camera provides an optimal solution for surveying areas with high amounts of traffic and license plate information retention. The camera offers a super wide 0.39” ~ 1.97” (10mm ~ 50mm) lens which provides a full 40° (W) ~ 9° (T) viewing angle. The camera features full color night vision with the use of 6 individual white light LEDs to illuminate the area at night. The camera can detect and capture license plate information from up to 98ft, both day and night to provide 24-hour license plate detection surveillance.

The camera requires a PoE+ connection. This connection provides both power and data to the camera using a PoE+ compatible switch.

Installation

Before setting up your camera, please ensure the installation surface can support at least 3 times the weight of the camera.

MicroSD Card Installation

The camera is compatible with up to a 256GB microSD card. Please make sure the microSD card is rated class 10 or above and properly formatted before installing into the camera.

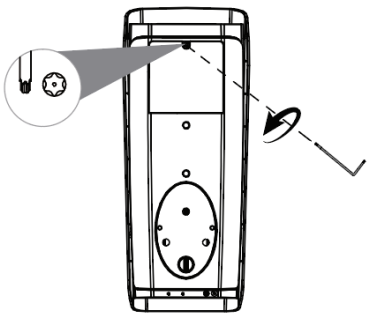	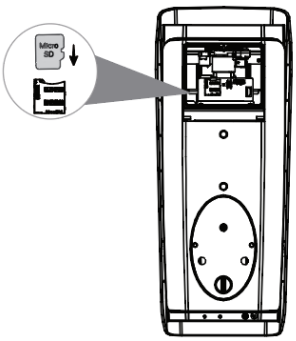
Use the included torx wrench to remove the bottom panel.	Insert the microSD card into the microSD card slot of the camera and secure the back panel back onto the camera using the included torx wrench.

Camera Installation

Included with your camera is an installation bracket that can be used to mount your camera to an installation surface such as a wall or pole. As stated, please make sure the installation surface can support at least 3 times the weight of the bracket and camera. For more information, please refer to the installation guide included with this device.

Note: When installing the camera, please make sure to set the viewing angle in a manner that is optimal for capturing license plate data in the area such as in the front of the road, street, or at an angle that can easily capture license plate information.

Ceiling/Wall Mounting

A drill with an 8mm diameter head as well as a wrench will be required to complete this process. The same concept can be applied as well if mounting to side wall or other similar mounting surface.

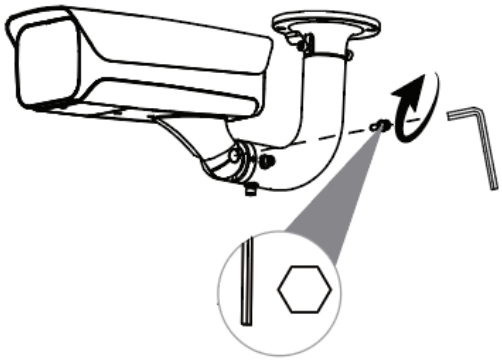	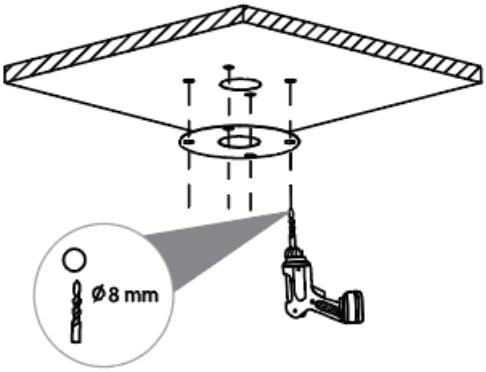
Insert the bottom bracket of the camera into the top of the installation bracket and secure it using the included Allen wrench. Run the wiring through the tube of the installation bracket.	Apply the installation sticker to the mounting surface. Use a 8mm diameter drill head to drill the holes provided on the sticker.
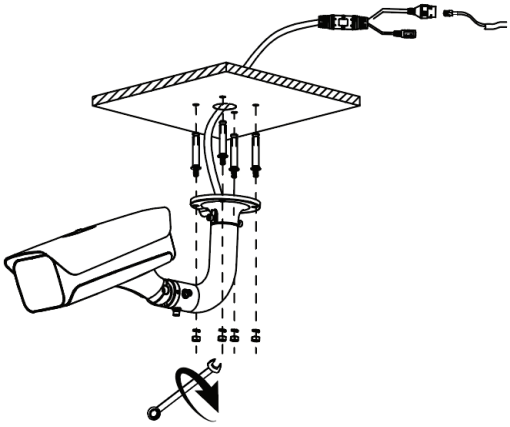	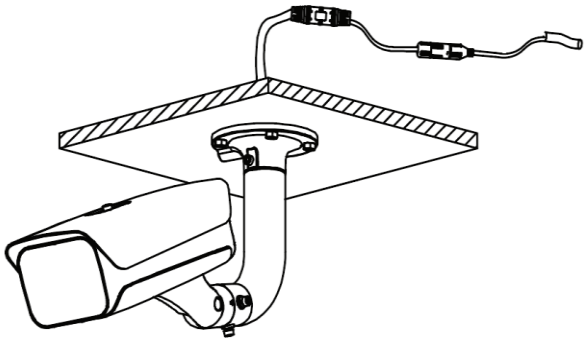
Insert the installation bolts into the installation bracket into the holes. Use a wrench to secure the installation bracket to the mounting surface and connect all wiring.	Ensure all screws are tightened and all wiring is properly connected to complete the installation process.

Pole Mounting

If mounting to a pole, please make sure the pole and installation area can support 3 times the weight of the camera. A flathead screwdriver and applicable Allen wrench should be used to complete this process.

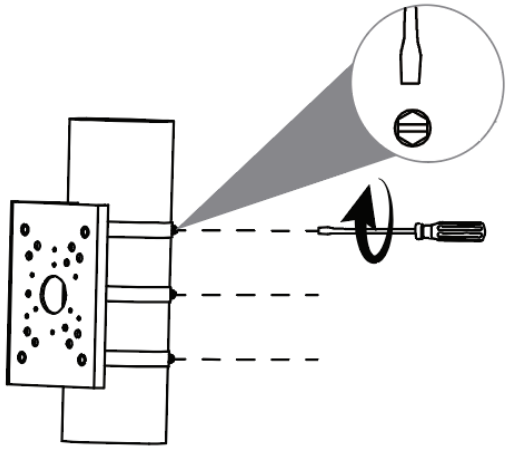	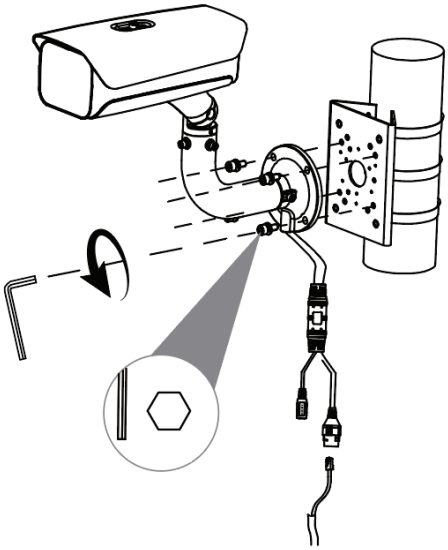
Attach the pole mounting bracket to the installation surface and tighten the bolts using a flathead screwdriver.	Attach the installation bracket to the pole mount and secure it using an Allen wrench. Run all wiring through the installation bracket and through the pole mount. Insert the bottom bracket of the camera into the top of the installation bracket and secure it to the installation bracket.

Initialization

The camera can be accessed in a web browser using an IP address. The IP address for your camera can be located using the Amcrest IP config tool, before locating the IP address, please make sure the camera and the computer are on the same network. To download the Amcrest IP config tool, please visit amcrest.com/downloads and download the IP config software.

After obtaining the IP address, the camera can be initialized and viewed using most mainstream web browsers, such as Google Chrome, Firefox, Safari, Mircosoft Edge, etc, however some features, such as the Query feature may require the use of a plugin. For an optimal experience it is highly recommended to use IE mode in Edge or other browser option that supports this function. To begin, enter the IP address for your camera into the browser.

Enter the password for your device into the interface and confirm, then click OK to proceed.

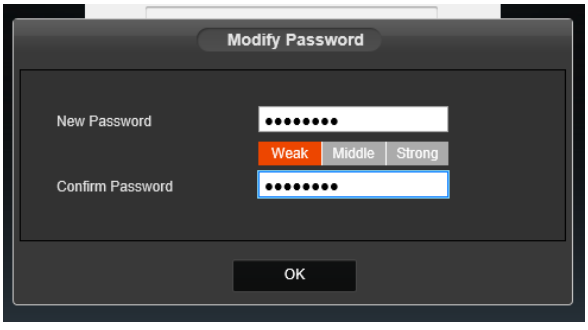

The default username for the camera is admin. Enter the username and password into the interface and click Login.

Live View

The live view interface allows you to view and configure real time license plate information as it is detected by the camera. To configure LPR settings, click the Config (LPR) button. By default, the capture area will be set to a recommended capture area. However, this camera be customized if needed. To customize the capture area, click and drag each corner of the capture area box to the optimal size of the detection area. Click the Save button to save any configuration settings applied to the camera.

Note: The capture area is just for license plate numbers, there is no need to set the detection area in a manner that captures the entire vehicle.

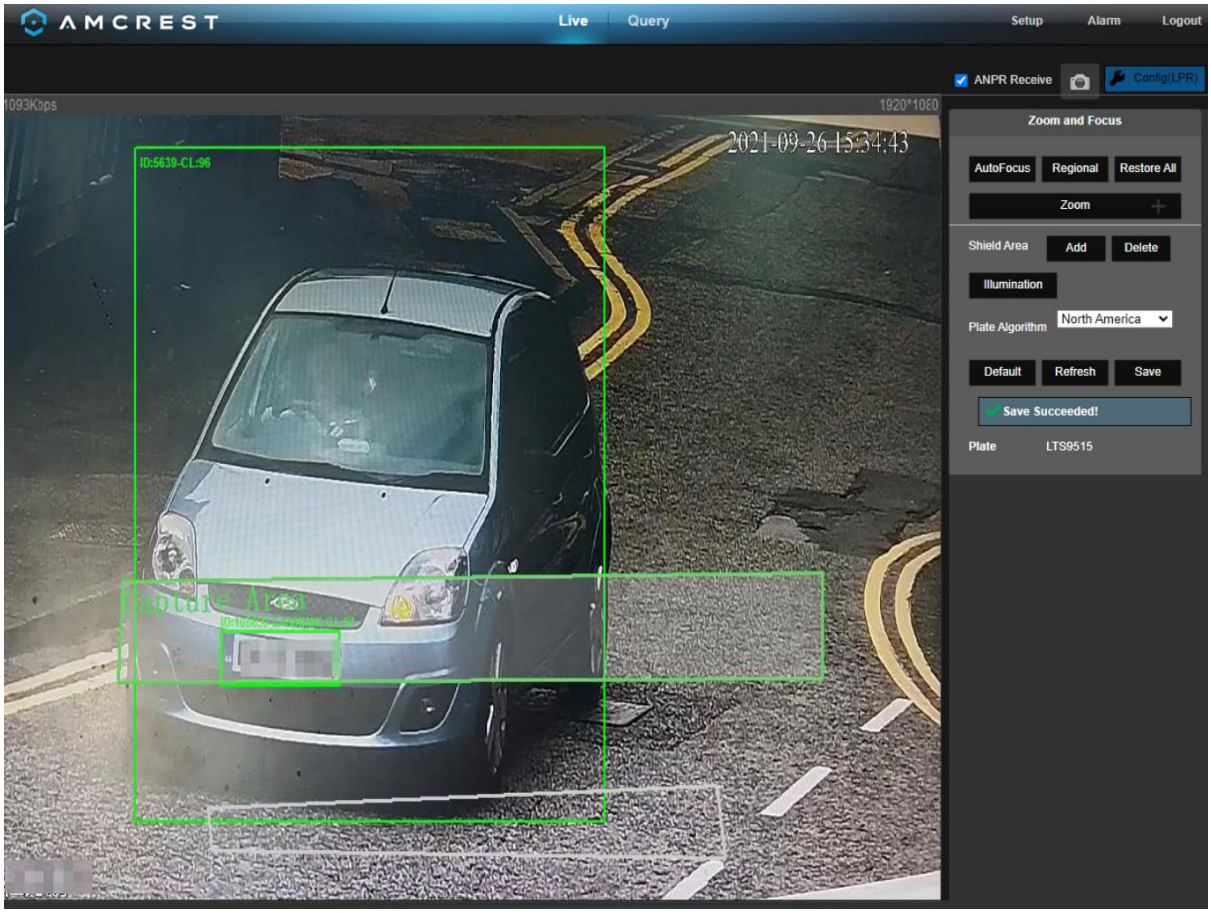

Once a license plate in the capture area is detected, the information will be visible in the live view interface and a snapshot will be retained if a microSD card or FTP if an FTP protocol has been established.

Query

The query menu is used to open or export LPR information from the device to a computer. Please note, this camera only supports snapshots and does not have an option to view video. The information available in the query menu will be based on how the event type is stored. The snapshots can be retained using a microSD card or using an SFTP/FTP protocol. For more information on how to setup SFTP/FTP, please visit amcrest.com/support.

Image Search

This option allows the user to search and download plate information for events that have been stored locally on a microSD card. The PC Picture tab also provides a method to browse a directory on the computer to access images stored on the PC.

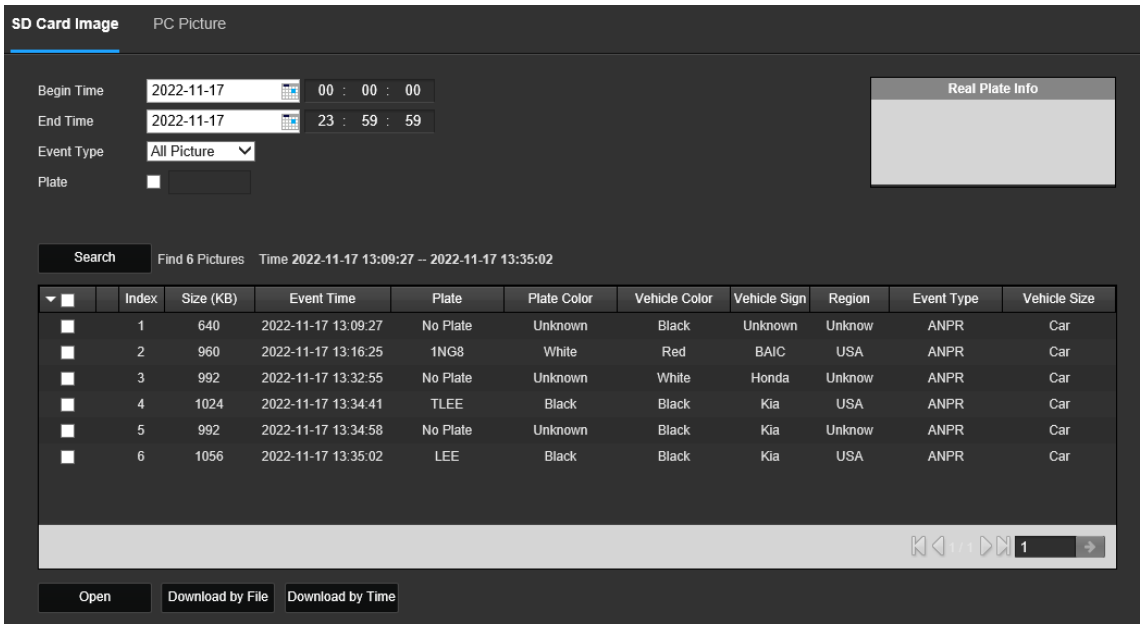

To view an event, select a beginning and end time (date & time) as well as the event type (All, ANPR, or Manual snapshots) and click Search. Select an event from the interface and click **Open** to view the event. The event can be downloaded by file or by time. To download a specific event from the interface, select the files from the list and click **Download by File**, select a directory, and download the files to your computer. To download a specific date and time range, enter the start and end time into the interface and click **Download by Time**, choose a directory, and allow the images to download to your computer.

Capture Record Search

This menu allows you to export each image for a specific date & time range as an excel or .csv file. This is useful if you would like to retain a report of the events detected by the camera in certain times of the day.

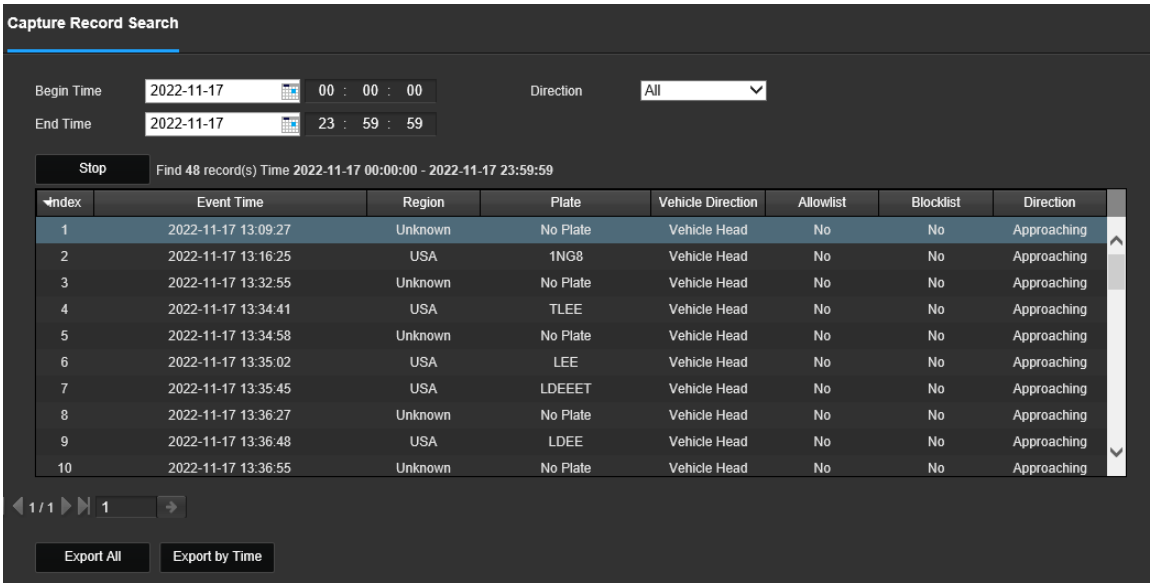

To export these files, select a date & time range and click Search, a list of all events for that date & time range will appear. To export a report of these events, click the Export All button, select a directory and download the file to your computer. If you would like to download a .csv file with events in another date & time range, enter the beginning and end ranges and click Export by Time, select a directory, and download the report to your computer.

Note: If you have any abnormality alarms set and would like to export a report of these alarms, use the Alarm Output Search menu to download a report of these events to your computer.

Email Alerts

The email alerts option provides a solution that will allow you to be notified of any abnormalities such as block listed plate numbers, illegal access, etc. has been detected by the camera. To setup email alerts, please refer to the information provided below. Please note, in this example we are using Gmail.

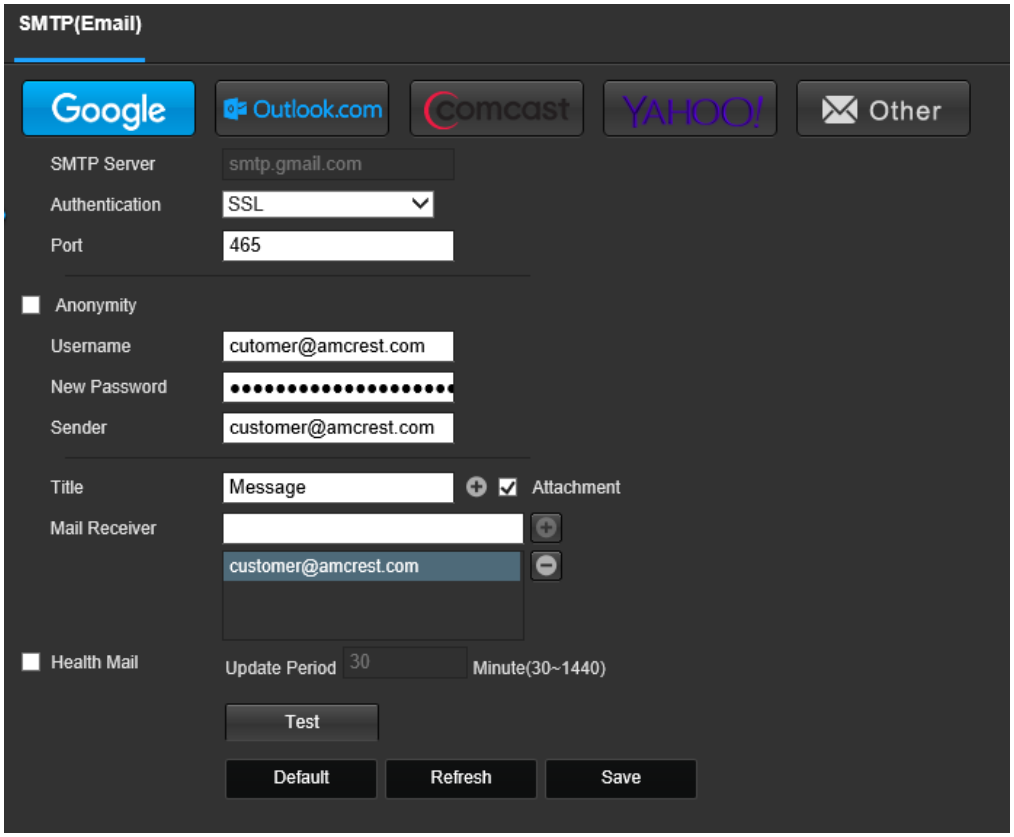

1. Navigate to **Setup>>Network>>Email(SMTP)**
2. Select your email provider, which in this case is Google. The SMTP server, authentication, and port number will be imported for you.
3. Enter the email address into the username field.
4. Enter a generated password (provided by Google) for your email address into the password field. To obtain this password, access your Gmail account and select **Manage Your Google Account**. Select **Security** and click on **App passwords** (please make sure 2-factor authentication is established before entering). Enter the password for your email and click **Next**. Select the Custom option, enter a name for the authentication, and click **Generate**. Use this password for email alerts.
5. Enter the email address of the sender into the **Sender** field.
6. Enter the email address of the receiver into the **Mail Receiver** field and click the “+” button to import.
7. Click **Save**, then click **Test** to test the connection.

How To Upgrade System Firmware

Keeping the firmware on your camera up to date is an important part of overall system health. For security purposes, it is highly recommended to upgrade the firmware on your device every time a new firmware is available. To locate the most up to date firmware for your device please visit https://amcrest.com/firmware

1. Download the .bin file for your camera from https://amcrest.com/firmware
2. Open your camera in a web browser and navigate to Setup>> System>>Upgrade.
3. Click Import and locate the .bin file on your computer.
4. Click Upgrade and allow the camera to upgrade.

Accessing the Web User Interface Remotely

For the purposes of this guide, we will outline the most common method for setting up web access. Port forwarding using the HTTP protocol and using Dynamic Domain Name Server (DDNS) is the easiest way to setup stable remote access.

For this method, you should have direct access to your router as well as the ability to port forward the device using the router's built-in interface. Below is a step-by-step walk through those details how to setup the camera for remote web access using DDNS.

1. Log into the web UI and navigate to **Setup>>Network>>Connection**.

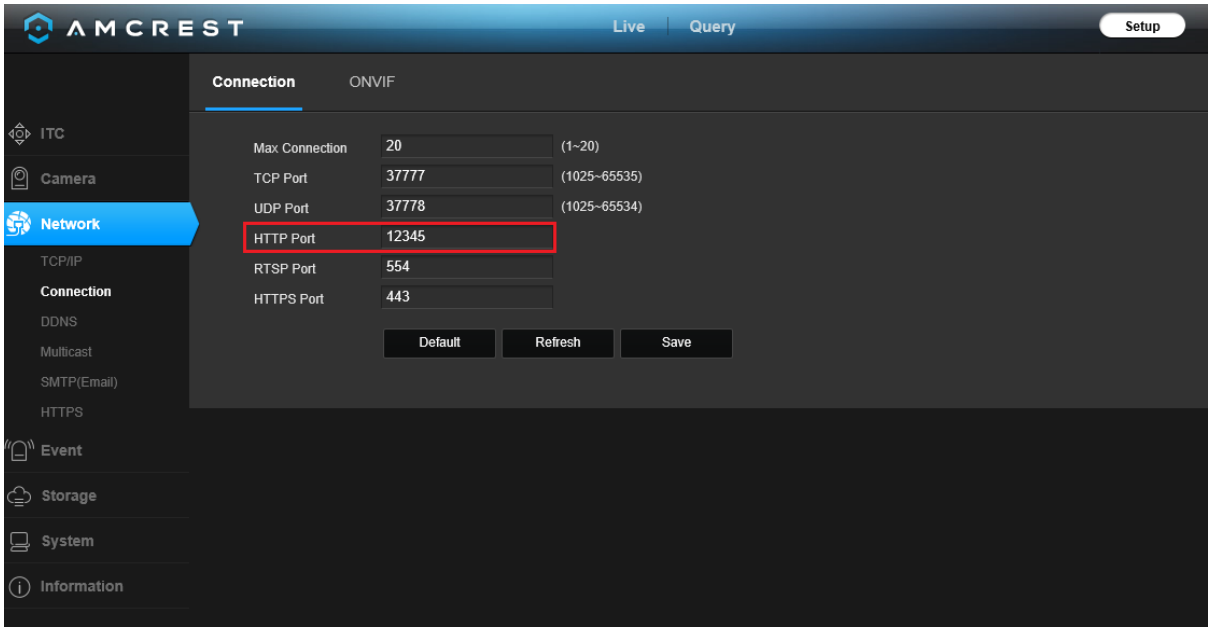

It is recommended to ensure the port number is at least 5 digits long to prevent any port conflicts. You can change the port to any 5-digit number that is less than 65535 (e.g.12345) by clicking the number field and entering a new port number. Write it down, then click **Save**.

2. The system will need to reboot for this change to take effect. Click **OK**.

3. Once the camera has come back online, log back into the web UI and navigate back to the Connection menu to verify the HTTP port has been updated properly.

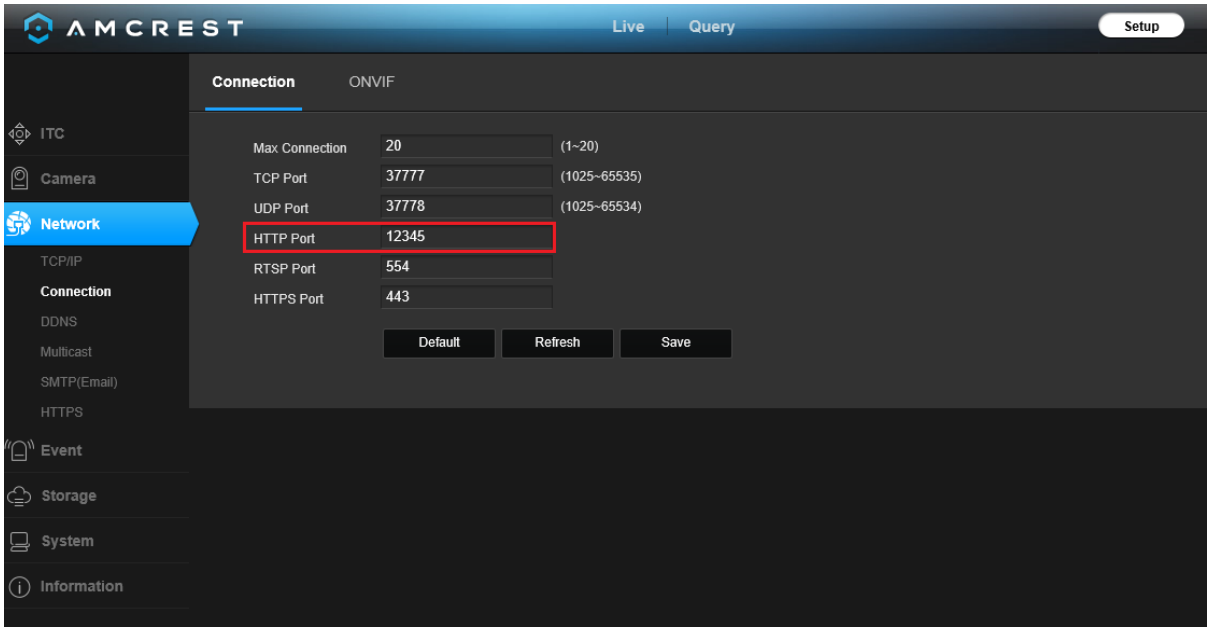

4. Access your router's user interface and port forward the device using the HTTP port information displayed in the system. Every router's port forwarding protocols are unique. For more information on how to port forward your specific device, please visit portforward.com or refer to the user manual for your specific router.

Note: When port forwarding the camera in your router, make sure to use the TCP, UDP and updated HTTP protocols displayed in the camera. If DDNS is not an option, the device can be accessed remotely using the public IP address for your network and the HTTP port used that was port forwarded in your router. To locate your public IP address and verify the connectivity of your system, please visit: canyouseeme.org

5. Click on the **DDNS** menu located in the **Network** tab. In the DDNS menu, click on the **Type** checkbox to enable DDNS. Make sure the **AMCREST DDNS** type is selected and a host name for the camera (one you create) is entered in the HostName field. As an example, the hostname will be in the following format: mynewcamera.amcrestddns.com

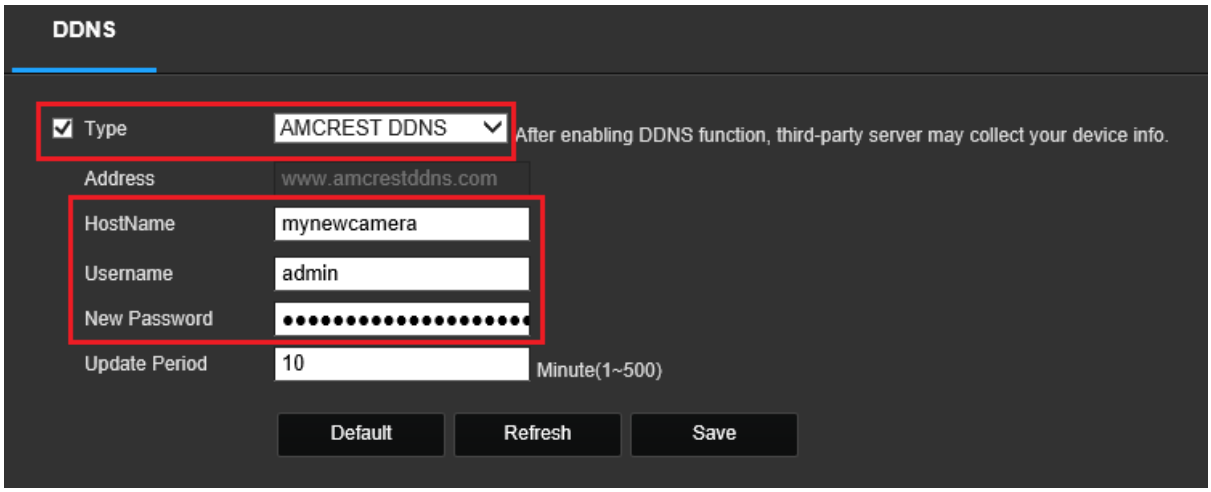

Enter the username and password and click **Save**.

Accessing the Device Remotely

After setting up the camera in the previous steps provided, open a web browser and enter in the DDNS domain name address previously setup for your CAMERA.

For example, if the DDNS domain name is http://abc123456789.amcrestddns.com and your HTTP Port is 12345, the URL would be http://abc123456789.amcrestddns.com:12345

Amcrest View Pro App Setup

The LPR camera can be added to the Amcrest View Pro app if needed, however, is only applicable to live view as the camera does not support video playback, motion detection, or push notifications. It is for **live view purposes only**.

The Amcrest View Pro app can be downloaded in both the App Store and Play Store.

The following steps will continue the app setup process for an Android phone and, though the iPhone version of the app has slightly different steps, most of this process is identical and easy. Download and install the Amcrest View Pro app for the App Store or Google Play Store.

Open the app on your mobile device and allow the app to load.

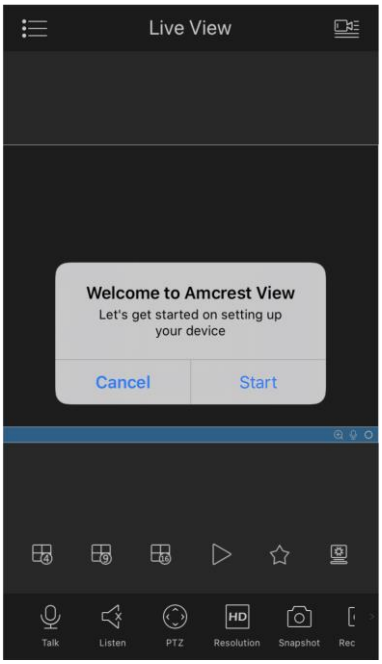	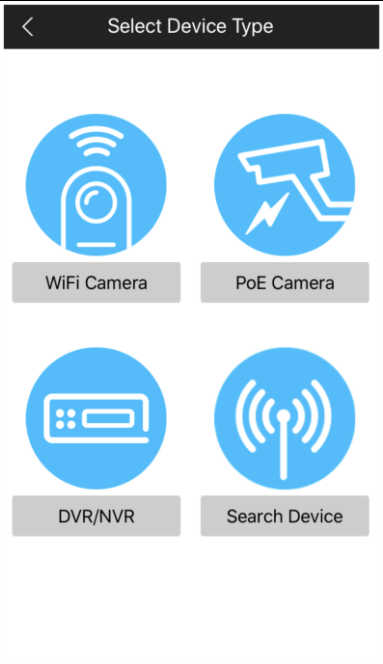	
3. Tap **"Start".**	4. Tap **"POE Camera"**	5. Tap **"P2P Connection"** **Note:** IP/Domain/DDNS can be used to establish a DDNS connection. For more information on how to setup a DDNS connection please visit https://amcrest.com/support

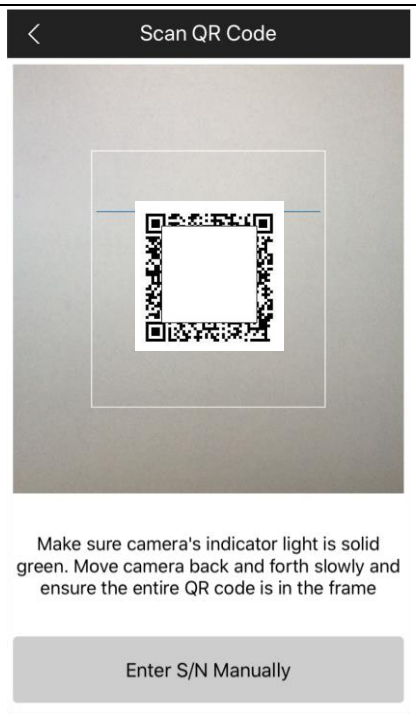	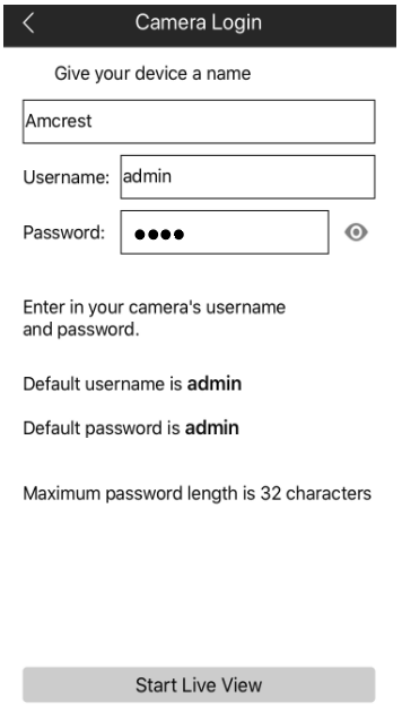	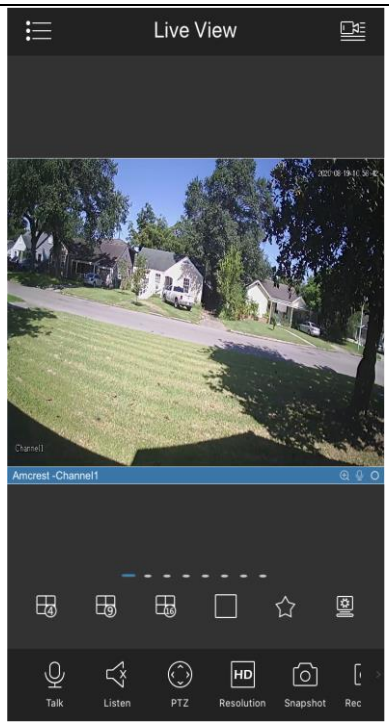
6. Scan the QR code. The QR code can be found on the serial tag along with the scannable barcode.	7. Create a name for the device and enter a username and password. The default username and password will be admin. Tap **"Start Live View"**.	8. Update the default password for the device and tap **"Start Live View"** to access the device in the app.

For more information regarding the Amcrest View Pro app, please visit:
https://amcrest.com/support

FCC Statement

1. This device complies with Part 15 of the FCC Rules. Operation is subject to the following two conditions: (1) this device may not cause harmful interference, and (2) this device must accept any interference received, including interference that may cause undesired operation.
2. The user's manual or instruction manual for an intentional or unintentional radiator shall caution the user that changes, or modifications not expressly approved by the party responsible for compliance could void the user's authority to operate the equipment. In cases where the manual is provided only in a form other than paper, such as on a computer disk or over the Internet, the information required by this section may be included in the manual in that alternative form, provided the user can reasonably be expected to have the capability to access information in that form.
3. (b) For a Class B digital device or peripheral, the instructions furnished the user shall include the following or similar statement, placed in a prominent location in the text of the manual: NOTE: This equipment has been tested and found to comply with the limits for a Class B digital device, pursuant to Part 15 of the FCC Rules. These limits are designed to provide reasonable protection against harmful interference in a residential installation. This equipment generates, uses and can radiate radio frequency energy and, if not installed and used in accordance with the instructions, may cause harmful interference to radio communications. However, there is no guarantee that interference will not occur in a particular installation. If this equipment does cause harmful interference to radio or television reception, which can be determined by turning the equipment off and on, the user is encouraged to try to correct the interference by one or more of the following measures:

-- Reorient or relocate the receiving antenna.
-- Increase the separation between the equipment and receiver.
-- Connect the equipment into an outlet on a circuit different from that to which the receiver is connected. -- Consult the dealer or an experienced radio/TV technician for help.

4. RF exposure warning

This equipment must be installed and operated in accordance with provided instructions and the antenna(s) used for this transmitter must be installed to provide a separation distance of at least 20 cm from all persons and must not be co-located or operating in conjunction with any other antenna or transmitter. End-users and installers must be provided with antenna installation instructions and transmitter operating conditions for satisfying RF exposure compliance.

References & Contact Information

To view setup videos for many of the steps outlined in this guide, go to http://amcrest.com/videos
For more supplemental information, a **full user manual**, or to view articles related to your device visit http://amcrest.com/support

For contact information please visit us at https://amcrest.com/contact or reach out to us directly at 1-888-212-7538

This quick start guide is for reference only. Slight differences may be found in the user interface.

All the designs and software here are subject to change without prior written notice.
All trademarks and registered trademarks mentioned are the properties of their respective owners.