Spotting Scope
Quick Start Guide

AMCREST

SETTING UP YOUR SCOPE

Model: **AMSS60-G**

Thank you for purchasing an Amcrest AMSS60-G Spotting Scope. Before using this product, please carefully read the instruction manual and keep your manual for future use.

Warning!
Never look at the sun when using your spotting scope. Looking at the sun can cause permanent eye damage.





1. Connect the threaded hole of the scope to the tripod and tighten the fastening screw.



2. Remove the caps from the objective lens and eyepiece.



3. Loosen the tripod handle and panning knob to position the scope to a desired position.

**To raise the tripod up or down, use the Raise/Lower knob.



4. To focus on a target, turn the zoom ring and focus knob to focus on the object then tighten the tripod handle to lock the scope into place.

*To switch between targets, repeat steps 3 and 4.

Spotting Scope
Quick Start Guide

AMCREST

MOUNTING YOUR PHONE TO YOUR SPOTTING SCOPE

Model: **AMSS60-G**

This product supports digiscoping which allows you to attach a universal phone adapter so you can take pictures/videos on your mobile device. For more information on how to connect the universal phone adapter, refer to the steps below.

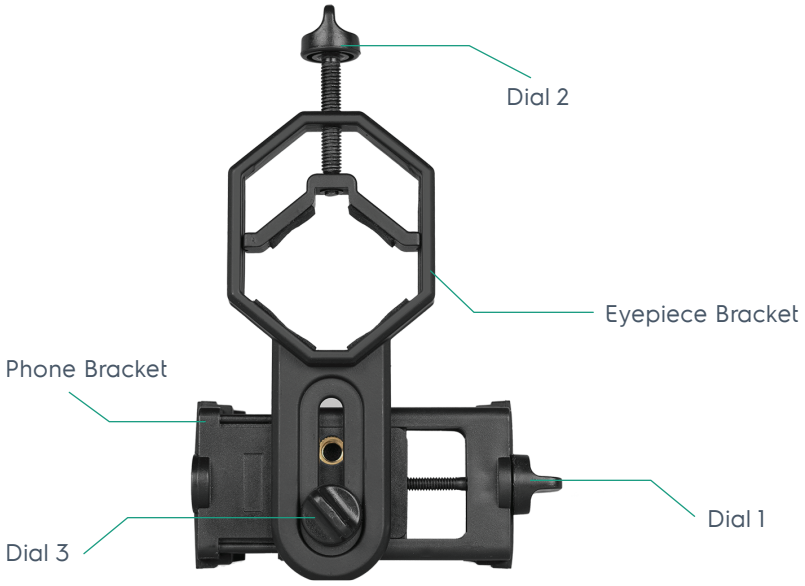



1. Turn Dial 2 to insert the eyepiece bracket of the universal phone adapter onto the eyepiece of the spotting scope. .



2. Turn Dial 2 to secure the phone adapter to the scope. Make sure not to overtighten the adapter to the scope.



**Use Dial 3 to slide the phone holder up or down on the bracket.

3. Turn Dial 1 to loosen the phone holder bracket and insert your mobile device. Turn Dial 1 to secure the phone onto the bracket. Turn your phone camera on and make sure the camera is properly positioned onto the lens of the scope.



4. Adjust the focus knob and zoom ring to focus the scope on the objecy. Once clear you can use your mobile device to take pictures or videos of the object.