QUICK START GUIDE

4MP UltraHD Light Bulb Camera

AL4M-L411W



AMLINK

Scan the QR code to learn more

NEED HELP?

Contact our support team:

amlinksecurity.com/pages/contact

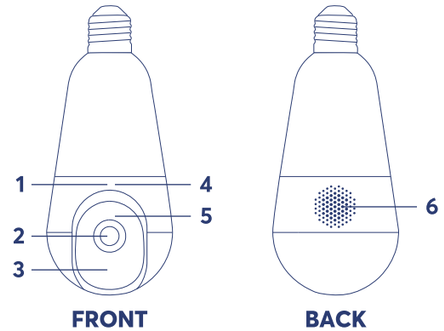

1. MicroSD card slot (Up to 128GB)
2. Lens
3. Microphone
4. Factory Reset Button
5. Status Indicator LED
6. Speaker

NOTE: To locate the microSD card slot, move the camera portion upwards and open the cover. The microSD card slot is located next to the factory reset button.

What's that light mean?

LED	Status
OFF	→ Power off/LED turned off → Device is in sleep mode
RED Solid	→ Booting → Device malfunction
BLUE Flashing	→ Ready for pairing → Pairing failed
RED & BLUE Flashing	→ Connecting to the network → Configuration in progress
BLUE Solid	→ Functioning Properly
RED Solid	→ Updating firmware

Let's get started

The AMLINK Pro app will be used to connect your camera to your Android or iOS mobile device, ensuring you are always connected to what matters most.

1 Download the AMLINK PRO app

Scan the QR code below to download the AMLINK Pro app on your smartphone.



NOTE: The device will not connect to any other platforms or apps except the AMLINK PRo app. A Bluetooth connection will be required to connect the camera.

2 Connecting to app

Open the AMLINK Pro app and register for an account. After registering, log into the app and begin adding your device.

You will need to allow all notification and location permissions if requested to allow the camera to connect to your mobile device.



NOTE: While setting up your camera the AMLINK Pro app will ask for Bluetooth permission. Please allow all requested permissions so your mobile device can discover the camera. For more information please visit: **amlinksecurity.com/support**

3 Connecting to camera

Apply power to the camera and allow it to initialize. Wait for the status indicator LED on the device to flash. Once it is flashing it is ready to add to the app. Connect your mobile device to your Wi-Fi network and make sure Bluetooth is enabled.

Tap the add icon in the AMLINK Pro app to begin adding your camera. Follow the on-screen prompts to finish adding the camera to your account.



NOTE: For more information on the setup and use of your device, please visit: amlinksecurity.com/support **amlinksecurity.com/support**

4 Mounting the camera

Screw the camera into a bulb socket in the direction of the arrow.

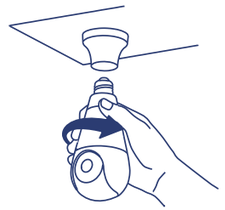

If you need to use the camera outside or in a location far from the router, please set up the camera on your network first using the included adapter at a location closer to your router. After it is connected to your network, move the camera to the desired location.



FAQ

How do I connect the camera to an NVR?

The camera uses RTSP to connect to an NVR. To connect your camera to an NVR, first open the AMLINK Pro app, navigate to your device settings, general, and select RTSP, and copy your camera's generated RTSP link. Next, log into your NVR's web user interface, go to the Camera Registration menu, and click "+ Manually Add". Set the protocol to "Custom," and enter the RTSP link into the Main Stream field, and click OK to complete the connection.

How do I connect my camera to Blue Iris?

The camera uses RTSP to connect to Blue Iris. To connect your camera to Blue Iris, open the AMLINK Pro app, navigate to your device settings, general, select RTSP, and copy your camera's generated RTSP link. Open the Blue Iris software and use the app generated RTSP link to finish adding your camera into the Blue Iris sofware.

Why is the camera not reading my microSD card?

The camera supports microSD cards with a max capacity of up to 128GB. If your microSD card is not being detected by the camera it may need to be externally formatted to FAT32 before using it in your device. This will ensure compatibility as well as ease of use within the device and allow the camera to easily detect and use the microSD card.

Where are the recorded videos saved?

If you have activated AMLINK cloud storage and installed a microSD card, the recordings will be both saved to the card and cloud. If the cloud storage is deactivated, the recordings will only record to the microSD card. Events manually recorded or taken from the live view or from playback will be stored in the **My Files** folder until downloaded to your phone.

How do I activate AMLINK cloud storage?

The AMLINK Pro app provides easy access to activate an optional cloud storage account. To activate, select your device in the app, and tap the cloud storage icon to begin registering and setting up your storage plan.

How do I know if my camera is using the latest firmware?

For security and performance, it is highly recommended to make sure your camera operates on the most up-to-date firmware version. To verify your current firmware version, access your device and tap on **Device Settings > Firmware** to access firmware

details and updates.

How do I set my camera up to only detect humans?

The camera has a built-in human detection mode that will allow the camera to only detect when humans are in the area. This is useful for reducing false alerts and increasing motion detection accuracy. To activate human detection, access your device and go to **Device Settings > Detection Settings > Motion/Human Detection**, and disable motion detection. Enable only the **Human Detection** option to enable human detection.

Q: What is AI tracking and how can I use it?

The AI tracking option is used to automatically follow a human in the area once it has been detected by the camera. The camera will track the person, record the event, and stop tracking once the person has left the detection area. This option can be enabled by going to **Device Settings > Detection Settings > Motion/Human Detection** and enabling the **AI Tracking** option.

Q: How do I allow push notifications to come through?

If using push notifications, please make sure your mobile device allows notifications from the AMLINK Pro app. To enable push notifications in the app, go to **Device Settings >**

This equipment has been tested and found to comply with the limits for a Class B digital device, pursuant to part 15 of the FCC Rules. These limits care designed to provide reasonable protection against harmful interference in a residential installation. This equipment generates, uses and can radiate radio frequency energy and, if not installed and used in accordance with the instructions, may cause harmful interference to radiocommunications. However, there is no guarantee that interference will not occur in a particular installation. If this equipment does cause harmful interference to radio or television reception, which can be determined by turning the equipment off and on, the user is encouraged to try to correct the interference by one or more of the following measures:
-Reorient or relocate the receiving antenna.
-Increase the separation between the equipment and receiver.
-Connect the equipment into an outlet on a circuit different from that to which the receiver is connected.
-Consult the dealer or an experienced radio/TV technician for help.
Caution: Any changes or modifications to this device not explicitly approved by manufacturer could void your authority to operate this equipment.
This device complies with part 15 of the FCC Rules. Operation is subject to the following two conditions: (1) This device may not cause harmful interference, and (2) this device must accept any interference received, including interference that may cause undesired operation.
RF Exposure Information
This equipment complies with FCC radiation exposure limits set forth for an uncontrolled environment.
This equipment should be installed and operated with minimum distance 20cm between the radiator and your body.