AMCREST SmartHome

Quick Start Guide

Home Alarm System

Model: AL-KIT1-PP



2 Contact Sensors

Motion Sensor

Smart Home Alerts

DIY Installation

We'd Love to Hear from You!

We wanted to personally reach out and thank you for purchasing from our Amazon store. Selling on Amazon is what we do to support our family, and product reviews are the lifeblood of our business. It would mean the world to us if you could take one minute of your time to help share the love by leaving us an honest review using the link below:

www.amazon.com/ryp

Thank you again for being one of our amazing customers!

Sincerely,

Amcrest Team

AMCREST SmartHome

01

Product Overview

What's Included?

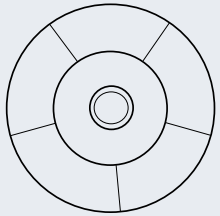

Sensor Hub

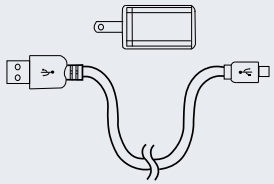

Power Accessories

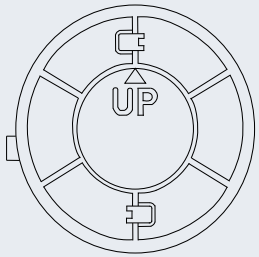

Bracket



Pin

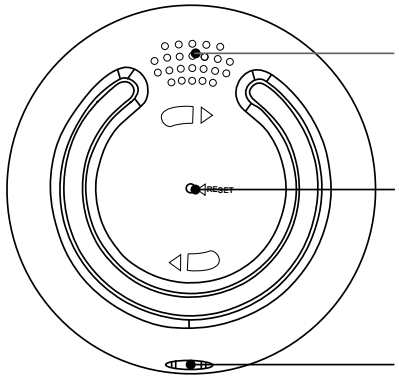

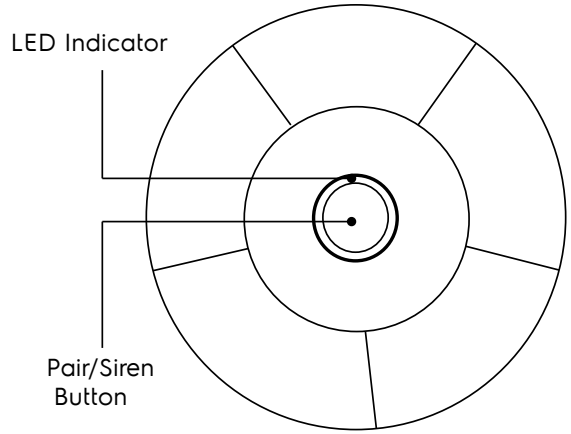

LED Behavior

Please refer to the table below for details regarding the LED behavior of the device.

Behavior	Description
● Solid	Home/Away/Disarm mode is activated.
● Flashing	Ready for network connection.
● Rapidly Flashing	Ready to pair. Press the Pair button.
● Solid	The device is rebooting.
● Flashing	Connecting to network.
● Rapidly Flashing	An alarm has been triggered.
● ● Alternating	Firmware upgrade is in progress.

Note: The alarm hub can support up to 32 sensors.

02

Setting Up the Hub

The Amcrest Smart Home app connects your device to your Android or iOS mobile device, ensuring you are always connected to what matters most.

To get the app, search for **"Amcrest Smart Home"** in the Google Play or App Store.

AMCREST SmartHome

Download on the App Store

GET IT ON Google Play

Initial Physical Setup

Connect the power cable to the included USB adapter and plug it into a nearby wall outlet. Plug the other end of the power cable into the USB power port on the hub.

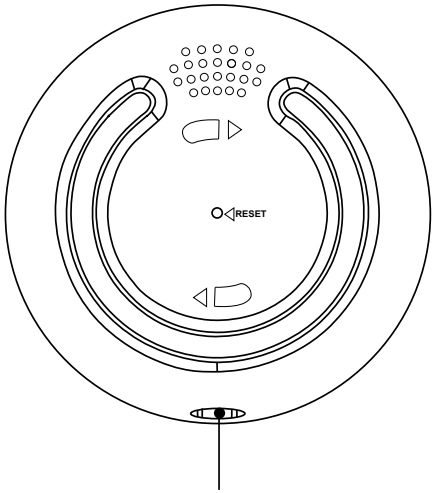

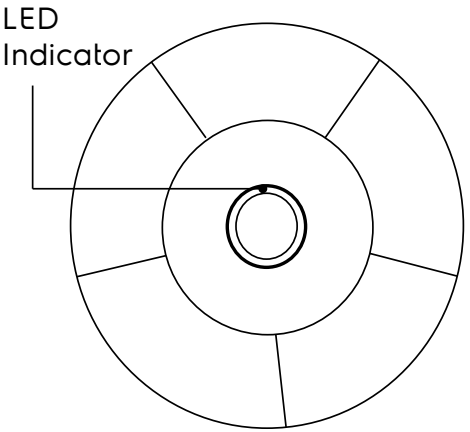

The hub will begin to initialize. Once the LED indicator is flashing blue, the hub will be ready to connect to the Amcrest Smart Home app.

Connecting to the Smart Home App

Open the Amcrest Smart Home app and tap **"Register"** to register an account. After registering an account, log into the app and tap **"Add Device".**

You will need to allow any notification and location permissions to allow the device to connect to your mobile device.

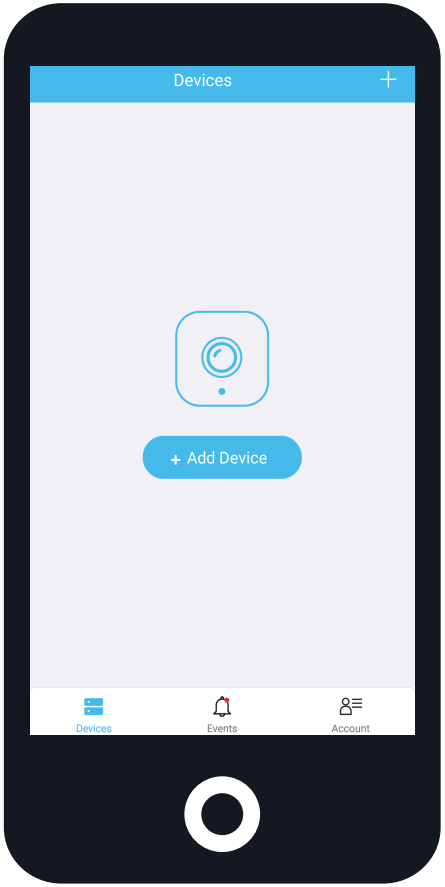

Scan the QR Code or Manually Enter the S/N

Scan the QR code located on the hub.

If you are unable to scan the QR code you can manually enter the serial number by tapping "Manually enter SN".



Connecting the Hub

1. Ensure the alarm hub is powered on.

2. Wait until the LED on the front of the hub is flashing blue.

3. Follow the on-screen prompts to finish pairing the hub to your account.

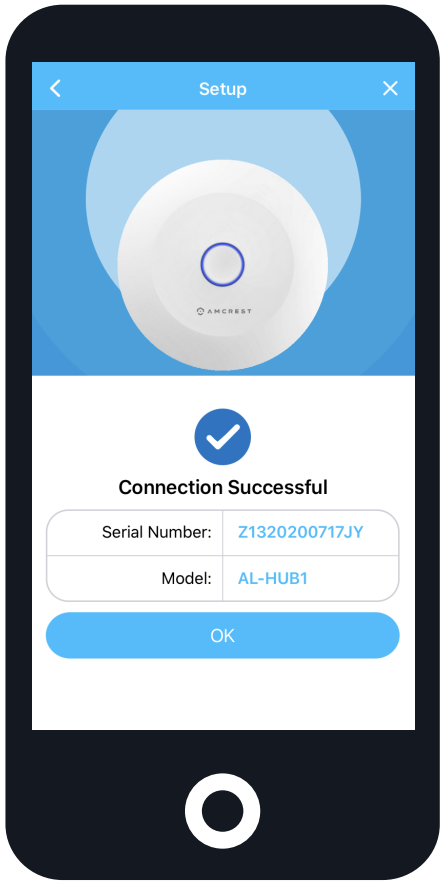

Note: After the hub has been added to the account it is now time to begin pairing sensors.

03

Door and Window Sensors

What's Included?

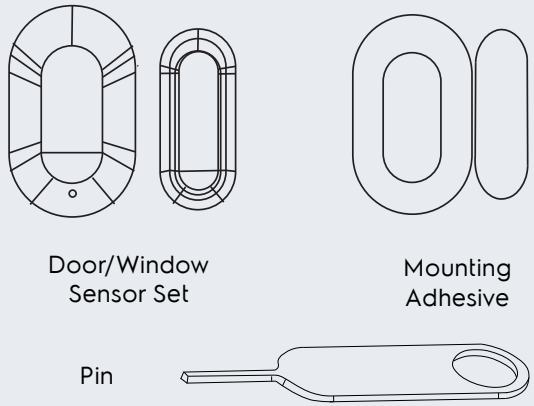

*This may include one or more depending on the package purchased. To purchase additional sensors, visit us at amcrest.com

Overview

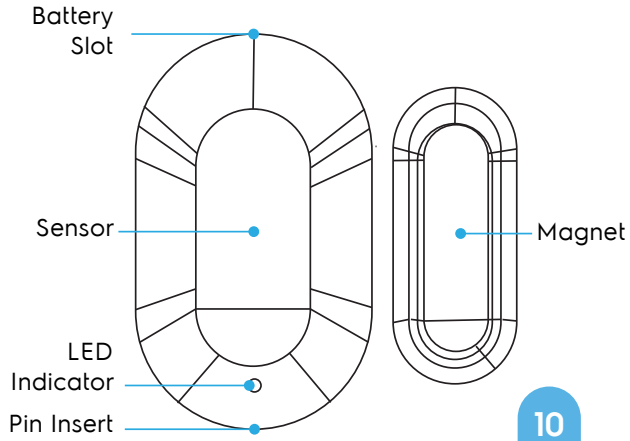

Specifications

Environment	Indoor
Max Detection Distance	Less than 3/4"
Operating	14°F ~ 113°F
Operating Humidity	0-95% RH
Battery	CR1632
Protocol	Bluetooth 5.0

LED Behavior

Please refer to the table below for details regarding the LED behavior of the device.

Behavior	Description
● Flashing Rapidly	Sensor is pairing.
● Solid (for 2 seconds)	Pairing successful
● Flashing (3 times)	Pairing failed. **Try repeating setup.
● Flashing Rapidly (after pairing)	Alarm has been triggered.
● Steady Flash	Firmware upgrade.

WARNING: CHOKING HAZARD
KEEP OUT OF REACH OF CHILDREN.

Pairing the Sensor

1. Locate the Alarm Hub on the main menu.

2. Tap on the "+" icon to pair the sensor to the hub.

3. Follow the on-screen prompts to finish pairing the sensor.

4. Test the sensor by moving the small magnetic portion along the right side of the sensor. The LED on the sensor will flash once it has detected motion.

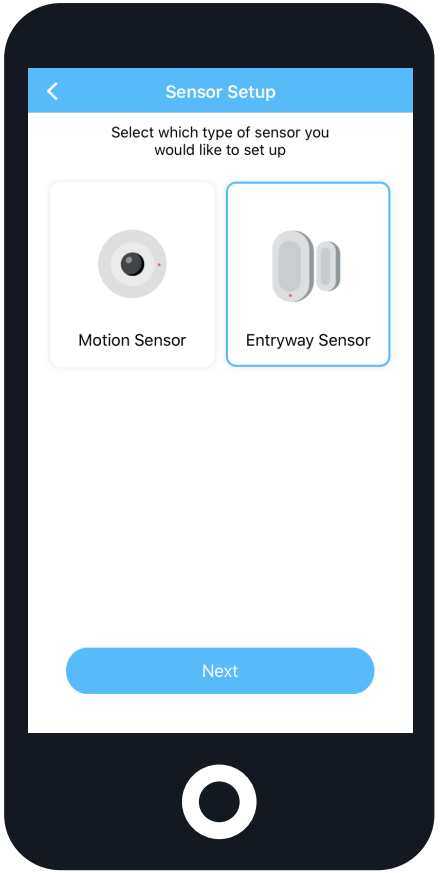

Note: It is recommended to keep the small magnetic portion 3/4" away from the sesnor. Do not place the small magnetic portion directly on the sensor.

Installing the Sensor

Location tips:

- Install the sensor in an indoor environment.
- If you are using a door, place the sensor at the top of your door to prevent it from being bumped and out of reach of children or pets.
- The sensor and magnet must be in line with each other and no more than 3/4" apart.

IMPORTANT: Install the magnet to the right of the sensor.

1. Choose an area for the sensor to be placed such as a window or door.

2. Ensure that the bluetooth connection is steady to the hub before mounting.

3. Peel the mounting adhesive and stick it to the back of the sensor. Peel the other portion of the adhesive and stick it to the mounting surface. Repeat this step for the magnet portion.

4. Open and close the door or window to ensure the sensor stays in place.

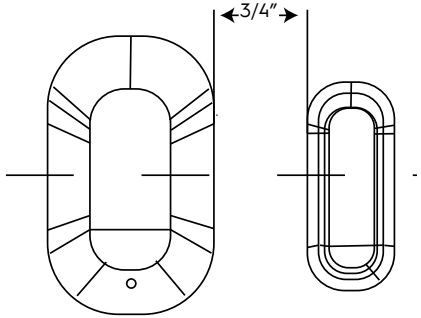

Note: For more information on how to change the battery, please visit amcrest.com/support

04

Motion Sensors

What's Included?

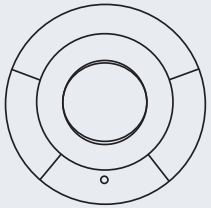

PIR Sensor

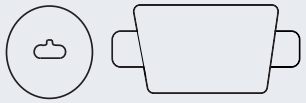

Mounting Adhesive

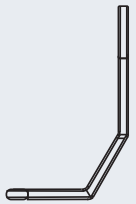

Bracket (Optional)



Pin

*May include one or more depending on the package purchased.

To purchase additional sensors, visit us at amcrest.com

Overview

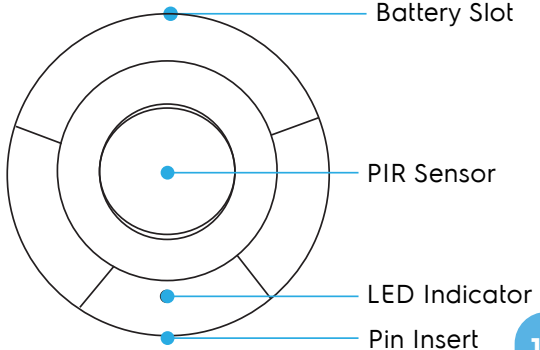

Specifications

Environment	Indoor
Max Detection Distance	26 feet
Max Detection Angle	110°
Operating Temperature	14°F ~ 113°F
Operating Humidity	0-95% RH
Battery	CR2450
Protocol	Bluetooth 5.0

LED Behavior

Please refer to the table below for details regarding the LED behavior of the device.

Behavior	Description
Flashing Rapidly	Sensor is pairing.
Solid (for 2 seconds)	Pairing successful
Flashing (3 times)	Pairing failed. **Try repeating setup.
Flashing Rapidly (after pairing)	Alarm has been triggered.
Steady Flash	Firmware upgrade.

WARNING: CHOKING HAZARD
KEEP OUT OF REACH OF CHILDREN.

Pairing the Sensor

1. Locate the Alarm Hub on the main menu.

2. Tap on the "+" icon to pair the sensor to the hub.

3. Follow the on-screen prompts to finish pairing the sensor.

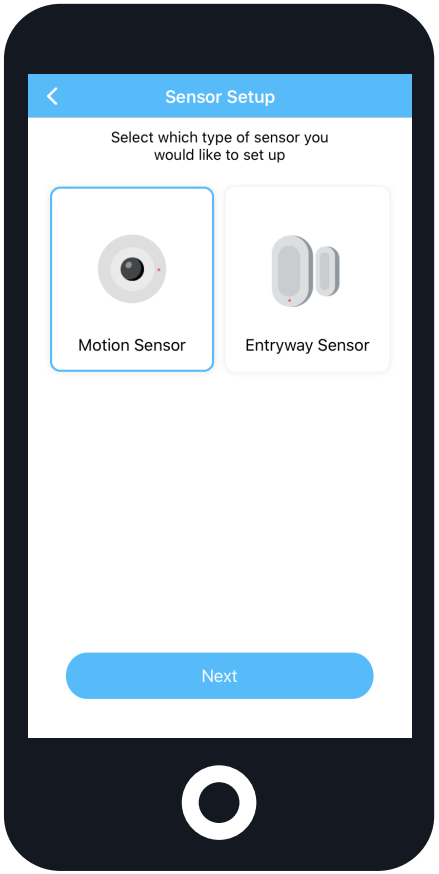

Note: An Amcrest Smart Home camera can be linked to either sensor if needed. For more information, please visit amcrest.com/support

Installing the Motion Sensor

Location Tips:

- Install the motion sensor indoors on a flat surface.
- The motion sensor should be placed 6 to 8 feet high to prevent it from falling and out of reach of children or pets.
- To detect smaller objects, it is recommended to use one of the angled sides of the bracket.

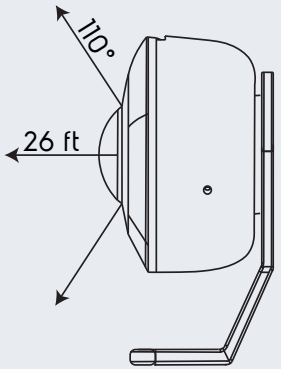

Install Using the Mounting Adhesive

Use the included two-sided mounting adhesive to install the sensor.

1. Peel one portion of the circular mounting adhesive and adhere it to the center portion of the sensor.
2. Peel the other portion of the mounting adhesive and adhere it to a flat surface.

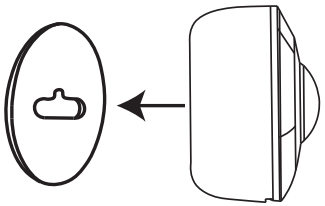

Note: The sensor can be placed on a table or at a 45° angle using the included bracket.

Install Using the Mounting Bracket

The bracket offers two separate angles for the sensor to face. Use the included two-sided mounting adhesive to install the sensor to the bracket.

1. Peel one portion of the circular mounting adhesive and adhere it to the center portion of the sensor.
2. Peel the other portion of the circular mounting adhesive and adhere it to the back of the bracket.
3. Place another mounting adhesive to the bracket to achieve the desired angle.
4. Peel the other portion of the mounting adhesive and place the bracket onto a flat surface.

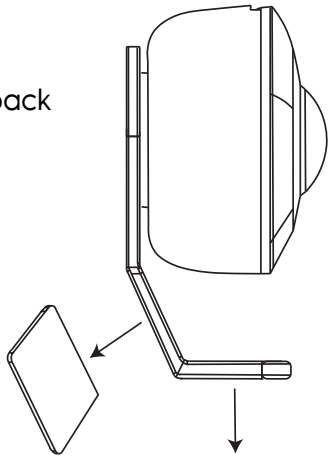

Note: An Amcrest Smart Home camera can be linked to either sensor if needed. For more information, please visit amcrest.com/support

05

Alarm Hub Physical Installation

- The hub should be installed indoors on a flat surface.
- The hub must be connected to a power source to operate.
- Ensure the hub is installed within range of the sensors and the Wi-Fi router.

Installing the Hub

1. Choose a central area for the hub to be placed.

2. Twist the supplied bracket clockwise from the back of the hub. Be sure to follow the "UP" direction.

3. Peel the bracket's adhesive and place it on the hub.

4. Peel the other side of the adhesive and place the hub to the desired surface area.

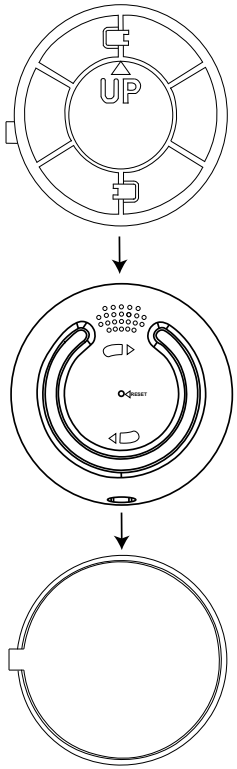

Note: Install the hub close to an electrical outlet.



How can we help?

We are dedicated to providing the highest quality support to our customers and are available 7 days a week.

Online Quick Start Guide

amcrest.com/support

Need help?

support@amcrest.com