ambient weather

AWN AMBIENT WEATHER NETWORK™

Enhanced by a powerful network of weather stations, the Ambient Weather Network provides the most accurate hyperlocal conditions for your neighborhood, activity, or business. Connect your compatible Ambient Weather Station to access your data remotely and join one of the fastest-growing weather communities. Personalize your data tiles, set alerts, and share your weather updates with other weather enthusiasts on our platform, which is always ad-free and free of charge!

Multiple Map Layers

Select the radar, wind, or temperature layers or drill down to view your neighborhood's weather stations.

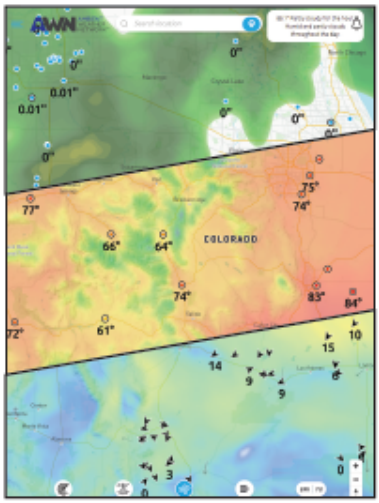

Customizable Forecast

Add your personal weather station to the map and create your own forecast for the community.

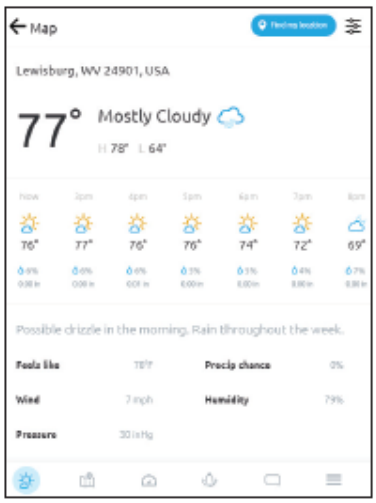

Local Weather Cameras

Watch timelapse videos of weather conditions from local weather cameras or add your own.

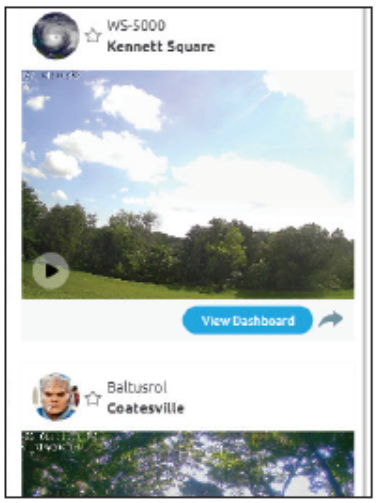

Scan the QR Code below to download the Ambient Weather Network App for free on the iOS App Store or Android Google Play Store.

©Copyright 2026, Ambient LLC. All Rights Reserved.

Ambient Weather WS-5000-IP OBSERVER Solar Powered Wireless IP Weather Station User Manual

Contents

1. Introduction 3
2. Warnings and Cautions 3
3. Quick Start Guide 3
4. Pre-Installation Checkout and Site Survey 4
   4.1 Pre-Installation Checkout 4
   4.2 Site Survey 5
5. Getting Started 6
   5.1 Parts List 6
   5.2 Recommend Tools 7
   5.3 Software Requirements 7
   5.4 Sensor Array Set Up 7
      5.4.1 Install the Batteries in the Sensor Array 8
      5.4.2 Install Sensor Array Mounting Arm 8
   5.5 Rain Gauge Setup 9
      5.5.1 Install the Batteries in the Rain Gauge 11
      5.5.2 Install the Funnel Coil Filter 12
   5.6 Finding the WS-5000-IP OBSERVERIP2.0 module from your computer 12
      5.5.1 PC Users 13
      5.5.2 Mac Users 15
      5.5.3 Linux Users 16
   5.7 Local Device Network Settings (optional) 17
   5.8 Weather Network Settings 18
      5.8.1 AmbientWeather.net 18
      5.8.2 Additional AmbientWeather.net Features 19
      5.8.3 Third party apps and integrations 20
   5.9 Live Data 20
      5.9.1 Reset and Change Rain Totals 24
   5.10 Calibration 26
      5.10.1 Relative Barometric Pressure Calibration Example 26
   5.11 Sensor Array Mounting 20
      5.11.1 Rain Gauge Mounting 22
   5.12 Adding Additional Sensors 29
      5.12.1 Accessories 32
      5.12.2 Indoor/Outdoor Thermo-Hygrometer, 8 Channel (optional, Model WH31E) 30
      5.12.3 Sensor Placement 34
6. Updating Firmware 34
   6.1 PC Users 34
   6.2 Mac Users 36
   6.3 Linux Users 37
7. Glossary of Terms 38
8. Specifications 40
   8.1 Wireless Specifications 40

©Copyright 2026, Ambient LLC. All Rights Reserved.

8.2 Measurement Specifications 40
8.3 Power Consumption 41
9. Maintenance 41
10. Troubleshooting Guide 41
11. Liability Disclaimer 43
12. FCC Statement 43
13. Warranty Information 44
14. California Prop 65 44

1. Introduction

Thank you for your purchase of the Ambient Weather WS-5000-IP Smart Wireless Weather Station with Remote Monitoring. The following user guide provides step by step instructions for installation, operation, and troubleshooting. To download the latest manual, firmware upgrades, visit:

https://ambientweather.com/faqs/question/tags/tag/WS-5000-IP

The product is continuously changing and improving, particularly online services and associated applications. Make sure you download the latest manual. Please visit:

https://ambientweather.com/faqs/question/tags/tag/WS-5000-IP

2. Warnings and Cautions

⚠ Warning: Any metal object may attract a lightning strike, including your weather station mounting pole. Never install the weather station in a storm.

⚠ Warning: Installing your weather station in a high location may result in injury or death. Perform as much of the initial check out and operation on the ground and inside a building or home. Only install the weather station on a clear, dry day.

3. Quick Start Guide

Although the manual is comprehensive, much of the information contained may be intuitive. In addition, the manual does not flow properly because the sections are organized by components.

The following Quick Start Guide provides only the necessary steps to install, operate the weather station, and upload to the internet, along with references to the pertinent sections.

©Copyright 2026, Ambient LLC. All Rights Reserved.

Required		
Step	Description	Section
1	Assemble and power up the ultrasonic sensor array	5.5
2	Assemble and power up the rain gauge	5.6
3	Power up the indoor thermometer-hygrometer-barometer	5.5
4	Power up the OBSERVERIP2.0 and connect to your router.	5.7
5	Select the weather station type WS-5000-IP.	5.8
6	Calibrate the relative pressure to sea-level conditions (local airport) on the OBSERVERIP2.0	5.8
7	Register and upload to Weather Servers	5.10
8	Mount the sensor array	5.11
9	Mount the rain gauge	5.11.1

4. Pre-Installation Checkout and Site Survey

4.1 Pre-Installation Checkout

Before installing your weather station in the permanent location, we recommend operating the weather station for one week in a temporary location with easy access. This will allow you to check out all of the functions, ensure proper operation, and familiarize you with the weather station and calibration procedures. This will also allow you to test the wireless range of the weather station.

©Copyright 2026, Ambient LLC. All Rights Reserved.

4.2 Site Survey

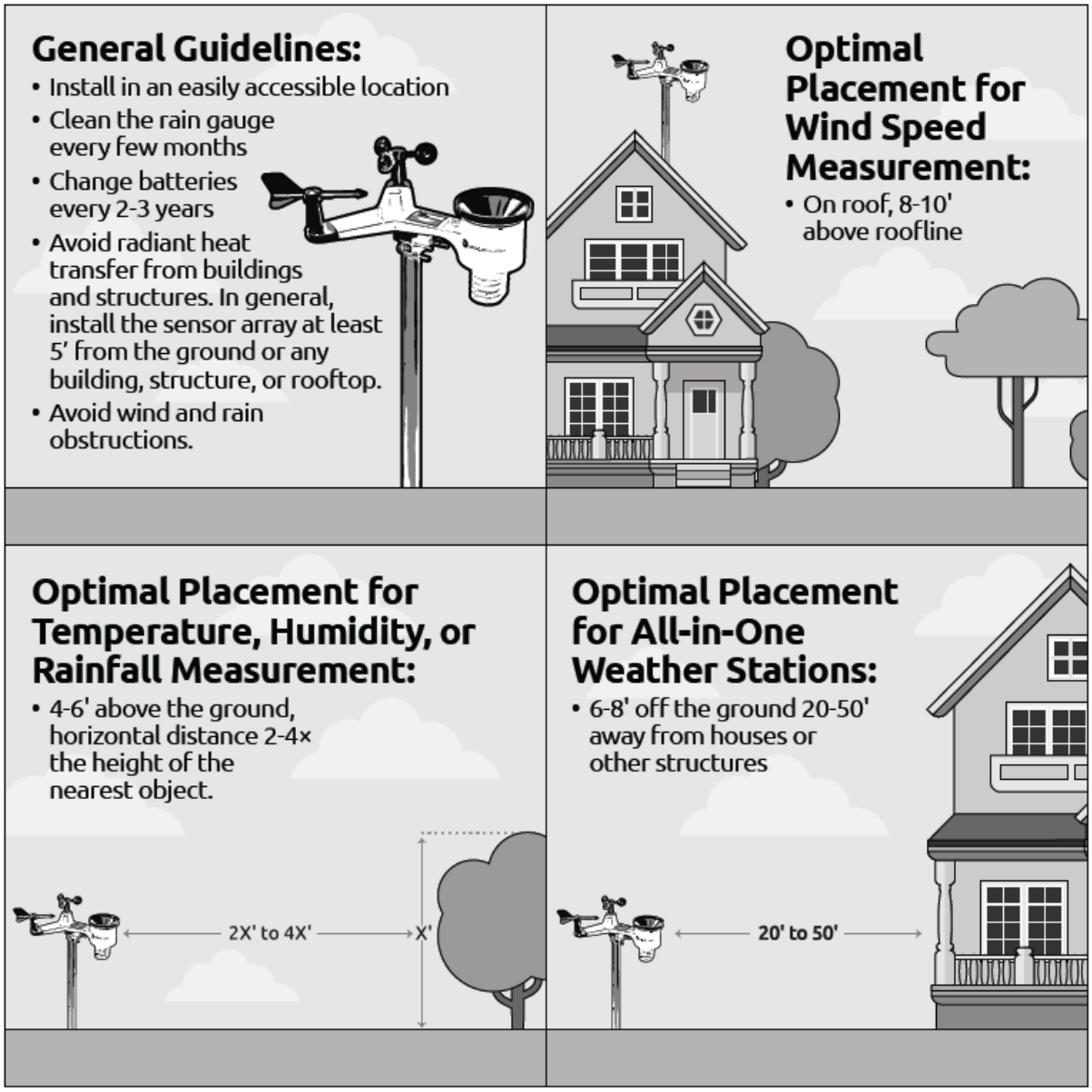

Perform a site survey before installing the weather station. Consider the following:

1. You must clean the rain gauge every few months and change the batteries every 2-3 years. Provide easy access to the rain gauge and sensor array.
2. Avoid radiant heat transfer from buildings and structures. In general, install the sensor array at least 5' from any building, structure, ground, or roof top.
3. Avoid wind and rain obstructions. The rule of thumb is to install the sensor array at least four times the distance of the height of the tallest obstruction. For example, if the building is 20' tall and the mounting pole is 6' tall, install the sensor array 4 x (20 – 6)' = 56' away.
4. Mount the sensor array in direct sunlight for accurate temperature readings.
5. Installing the weather station over sprinkler systems or other unnatural vegetation may affect temperature and humidity readings. We suggest mounting the sensor array over natural vegetation.
6. Wireless Range. Radio communication between receiver and transmitter in an open field can reach up to 1,000 feet, providing there are no interfering obstacles such as buildings, trees, vehicles and high

©Copyright 2026, Ambient LLC. All Rights Reserved.

voltage lines. Wireless signals will not penetrate metal buildings. Under most conditions, the maximum wireless range is 300'.

7. Radio Interference. Computers, radios, televisions, and other sources can interfere with radio communications between the sensor array and tablet. Please take this into consideration when choosing tablet or mounting locations. Make sure your display tablet is at least five feet away from any electronic device to avoid interference.
8. Visit Ambient Weather Mounting Solutions for assistance and ideas for mounting your weather station:

http://www.ambientweather.com/amwemoso.html

5. Getting Started

The Ambient Weather WS-5000-IP Ultrasonic Professional Weather Station consists of one OBSERVERIP2.0 module (RF receiver + IP Module / Wi-Fi transmitter), one ultrasonic sensor array, one rain gauge, one indoor thermo-hygrometer barometer, and one user manual:

It's worth noting that the OBSERVERIP2.0 is an upgrade to the previous OBSERVERIP sold from 2009-2022. The OBSERVERIP will NOT work with the WS-5000-ARRAY or WS-5000-RAIN. If you are interested in upgrading your OBSERVERIP to an OBSERVERIP2.0 please contact our customer service team at support@ambientweather.com.

5.1 Parts List

QTY	Item
ObserverIP2.0	
1	OBSERVERIP2.0 Module
1	5V DC Adaptor
1	Ethernet Cable
Ultrasonic Sensor Array Assembly (Item WS-5000-ARRAY)	
1	Ultrasonic sensor array with built-in: thermo-hygrometer / wind speed sensor/ wind direction sensor, light and UV sensor, solar panel
1	Mounting arm
1	Sensor array plastic mounting bracket
1	Mounting screw for connecting sensor array to the mounting pole
4	Threaded nuts for U-Bolts (M5 size)
4	Sensor array lock washers for threaded nuts
2	Sensor array metal mounting plate to be used with U-Bolts
1	Metal wrench for M5 U-Bolts, nuts, and washers
Thermo-Hygrometer-Barometer (Item WH32B)	
1	Thermo-hygrometer-barometer transmitter
1	Mounting screw
1	Zip tie for non-surface mounting
Wireless Rain Collector (Item WS-5000-RAIN)	
1	Rain Gauge
4	Threaded nuts for U-Bolts (M5 size)
2	Sensor array metal mounting plate to be used with U-Bolts
1	Metal wrench for M5 U-Bolts, nuts, and washers

©Copyright 2026, Ambient LLC. All Rights Reserved.

QTY	Item
1	Funnel coil filter
User manual	

5.1 Included tools

Quantity	Picture	Item
1	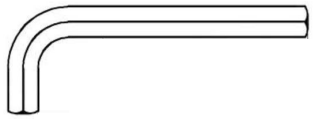	Allen wrench for Allen head bolt on mounting arm.

5.2 Recommend Tools

- Compass or GPS (for wind direction calibration).

5.3 Hardware Requirements

1. Broadband router
2. An “always-on” connection to the Internet. A high-speed DSL or cable internet connection that maintains constant connection to the internet.
3. AC Power

5.4 Software Requirements

1. Network connected computer, smart phone, or tablet with a browser

5.5 Sensor Array Set Up

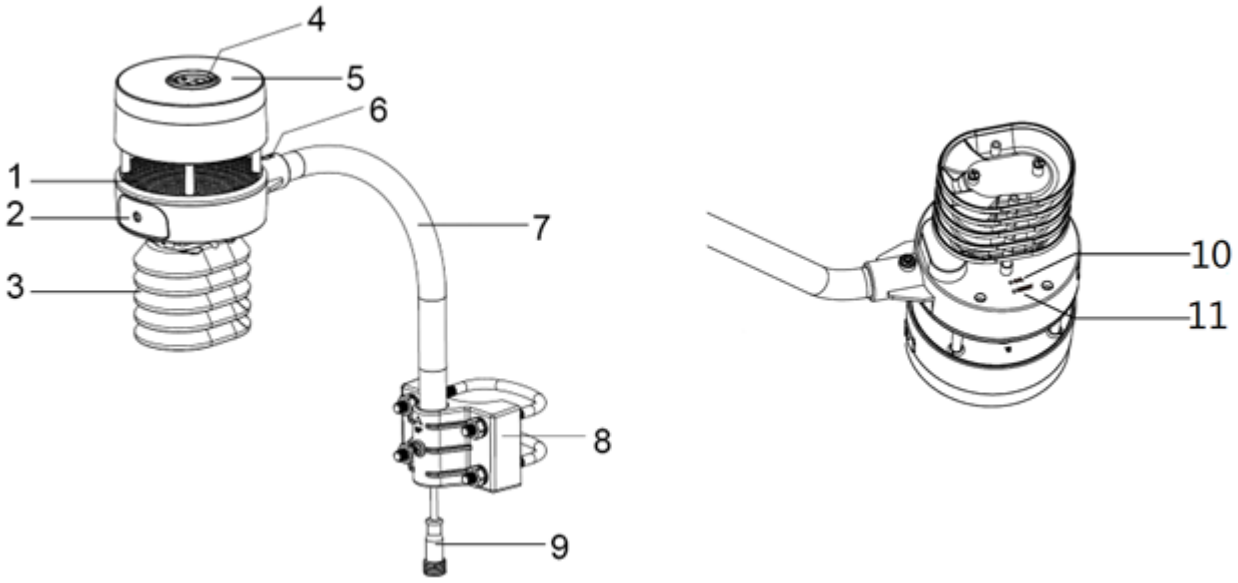

©Copyright 2026, Ambient LLC. All Rights Reserved.

No	Description	No	Description
1	Sonic wind sensor (wind speed and direction)	7	Mounting arm
2	Battery compartment	8	Mounting U-Bolt and bracket.
3	Temperature and humidity sensor	9	Heater cable
4	Light sensor, LED indicator	10	Calibration button (factory use only)
5	Solar collector	11	Reset button
6	North alignment marker		

Figure 1

5.5.1 Install the Batteries in the Sensor Array

Insert 2 x AA batteries into the battery compartment. Alkaline (> 4 °F) or Lithium batteries for cold weather climates (> -40 °F) are recommended.

The LED indicator on the top of the sensor array will turn on for 3 seconds and flash once every 4.75 seconds (the sensor transmission update period).

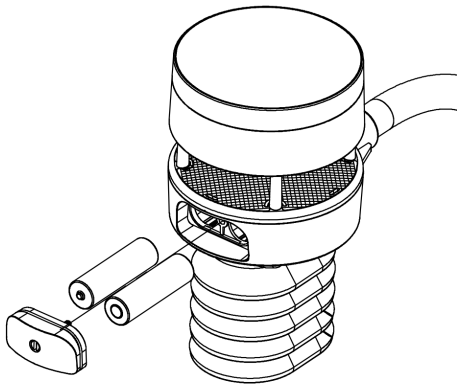

Figure 1

If the LED does not light up or flash, make sure the battery polarity is correct.

5.5.3 Install Sensor Array Mounting Arm

©Copyright 2026, Ambient LLC. All Rights Reserved.

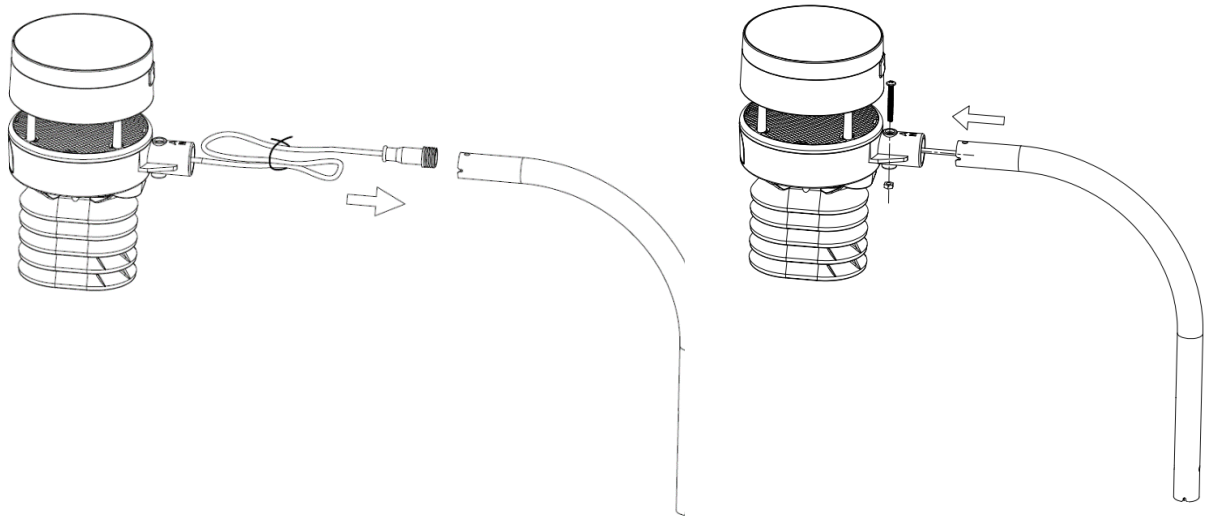

(a) (b)

Figure 2

Attach the mounting arm to the sensor array, as shown in Figure 3.

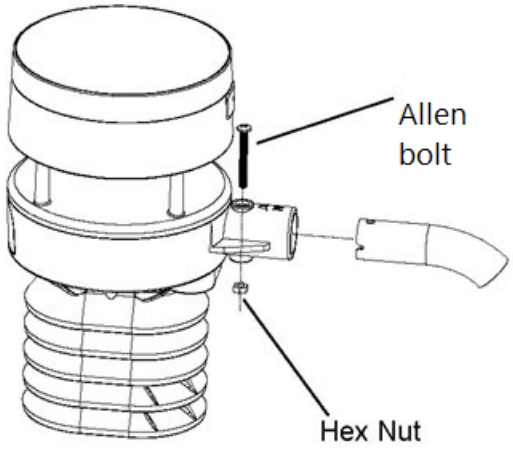

Figure 3

5.5.2 Indoor Thermo-Hygrometer-Barometer Transmitter

©Copyright 2026, Ambient LLC. All Rights Reserved.

Remove the battery door on the back of the sensor, as shown in Figure 4.

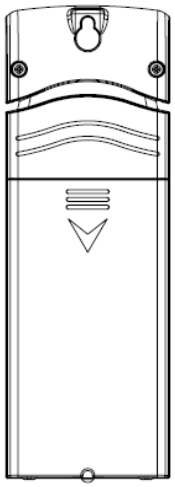

Figure 4

1. Insert two AA batteries.

2. After inserting the batteries, the remote sensor will display temperature, humidity and barometric pressure on the display, as shown in Figure 5.

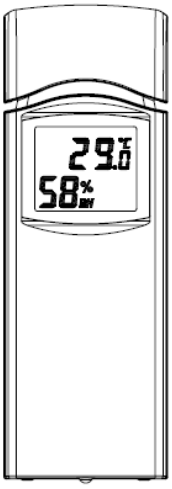

Figure 5

3. This sensor is also capable of displaying in Celsius or Fahrenheit by using the switch under the battery door. As shown in Figure 15a.

©Copyright 2026, Ambient LLC. All Rights Reserved.

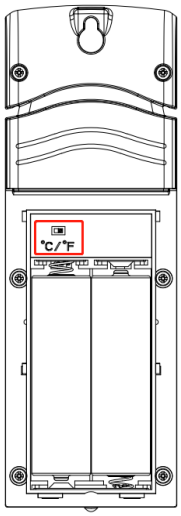

Figure 15a

5.6 Rain Gauge Setup

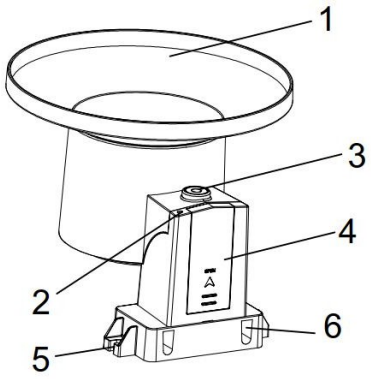

Figure 6

No	Description	No	Description
1	Rain collector and funnel	4	Battery door
2	LED indicator	5	Screw hole
3	Bubble level	6	U-Bolt installation hole

5.6.1 Install the Batteries in the Rain Gauge

Insert 1 x AA battery into the battery compartment. Alkaline (> 4 °F) or Lithium batteries for cold weather climates (> -40 °F) are recommended.

©Copyright 2026, Ambient LLC. All Rights Reserved.



Figure 7

The LED indicator on the top of the rain gauge will turn on for 3 seconds and flash once every 49 seconds (the sensor transmission update period).

If the LED does no light up or flash, make sure the battery polarity is correct. Press the reset button.

5.6.2 Install the Funnel Coil Filter

To install the funnel coil filter, press the coil until the hook is inside the hole at the bottom of the funnel, and locked in place. The spring tension will keep the filter sit tight on the funnel.

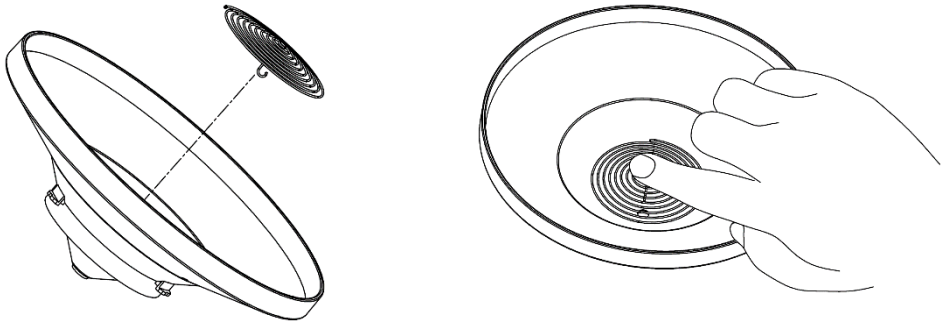

Figure 8

5.7 WS-5000-IP OBSERVERIP2.0 Network Connection Options

Connect the OBSERVERIP2.0 receiver power jack to AC power with the power adapter (included), as shown in Figure 10, reference 10.

The ObserverIP2.0 can connect to your network via Wi-Fi (Section 5.8) or directly connected to your router using the included Ethernet cable (Section 5.5), as shown in Figure 2, reference 8.

Place the powered sensors (including sensor array, indoor thermo-hygro-barometer) about 5 to 10 feet from the OBSERVERIP2.0 receiver and wait several minutes for the remote sensors to synchronize with the receiver. Once synchronized, the Indoor blue LED (Figure 9, reference 2) and Outdoor blue LED (Figure 9, reference 3) will be illuminated. **Adding additional sensors can be found later in Section 2.10*

©Copyright 2026, Ambient LLC. All Rights Reserved.

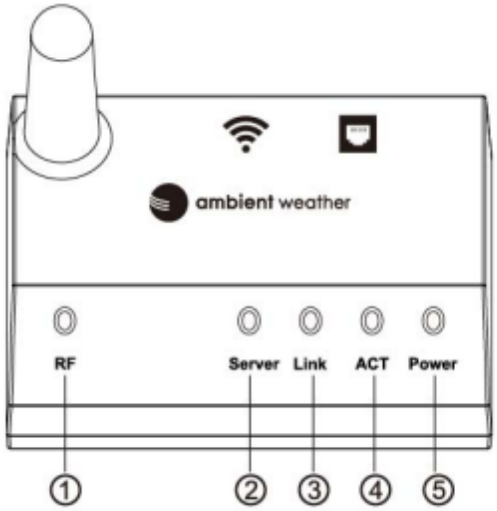

Figure 9

Ref.	LED	Description
1	RF	On when radio frequency receiver is operating properly
2	Server	On when connected to AmbientWeather.net internet hosting service
3	Link	Connect to the internet (or router)
4	ACT	Flashes when there is internet activity
5	Power	AC Power connected

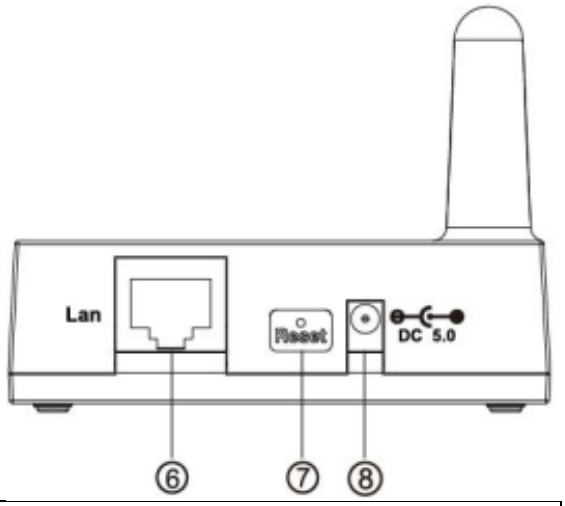

Ref.	Description
6	LAN connection (connect to router)
7	Reset button (use IP Module reset tool or open-ended paper clip)
8	AC Power connection

Figure 10

5.8 Finding the WS-5000-IP OBSERVERIP2.0 module from your computer

5.8.1 PC Users

©Copyright 2026, Ambient LLC. All Rights Reserved.

To find the OBSERVERIP2.0, connect to power and look for the following WIFI network.

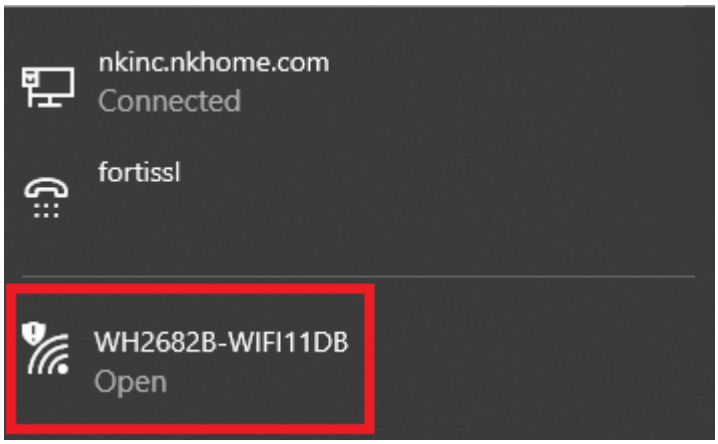

Connect to the network and then open a browser Note: you may be told network has no internet.

Navigate to the following IP address 192.168.4.1 you will be presented with the following screen. (Note: default password is blank)

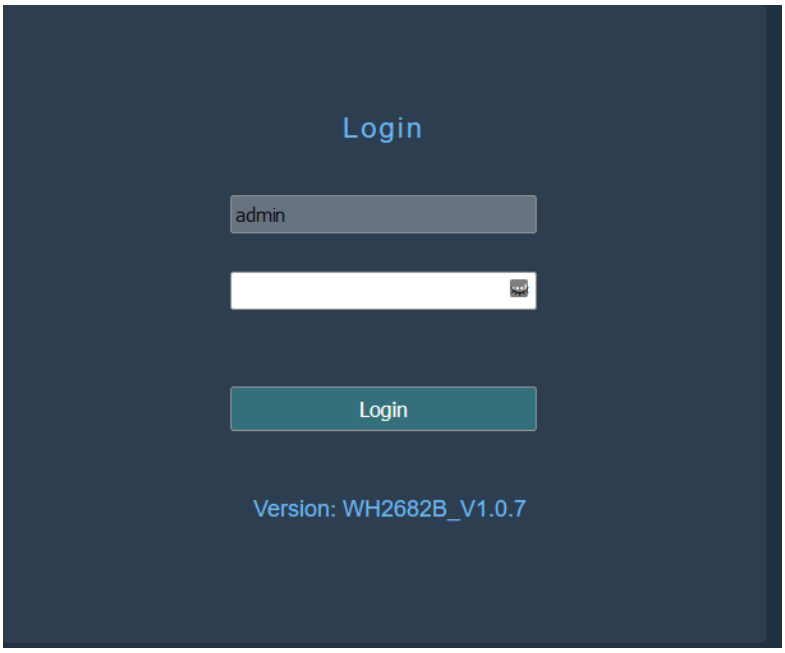

Once logged in you will want to navigate to the local network screen to connect to WIFI.

©Copyright 2026, Ambient LLC. All Rights Reserved.

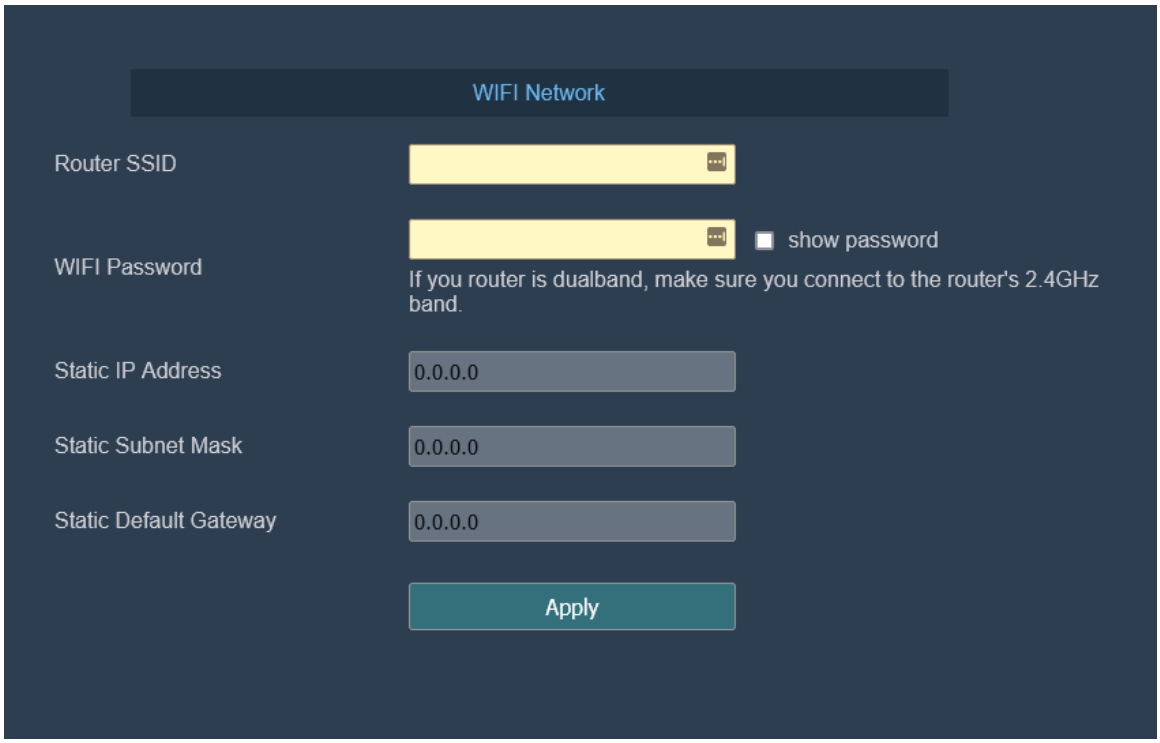

On the Sensors ID screen, you can register or re-register a sensor.



Figure 11

5.8.2 Mac Users

To find the WS-5000-IPreceiver, connect to power and look for the following WIFI network.

©Copyright 2026, Ambient LLC. All Rights Reserved.

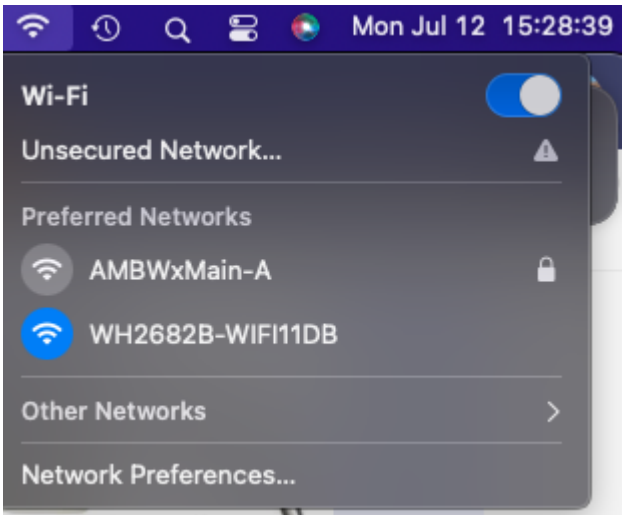

Connect to the network and then open a browser Note: you may be told network has no internet. Navigate to the following IP address 192.168.4.1 you will be presented with the following screen. (Note: default password is blank)

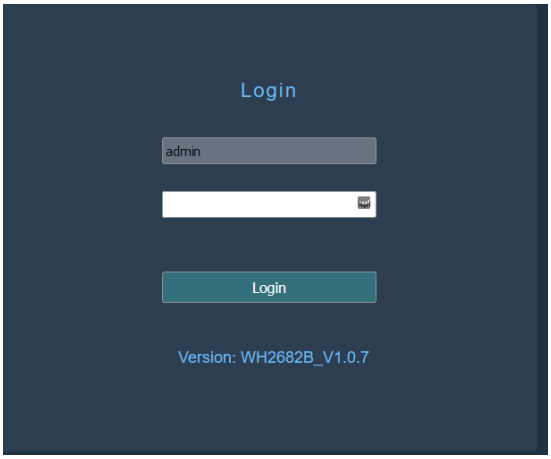

5.8.3 Linux Users

©Copyright 2026, Ambient LLC. All Rights Reserved.

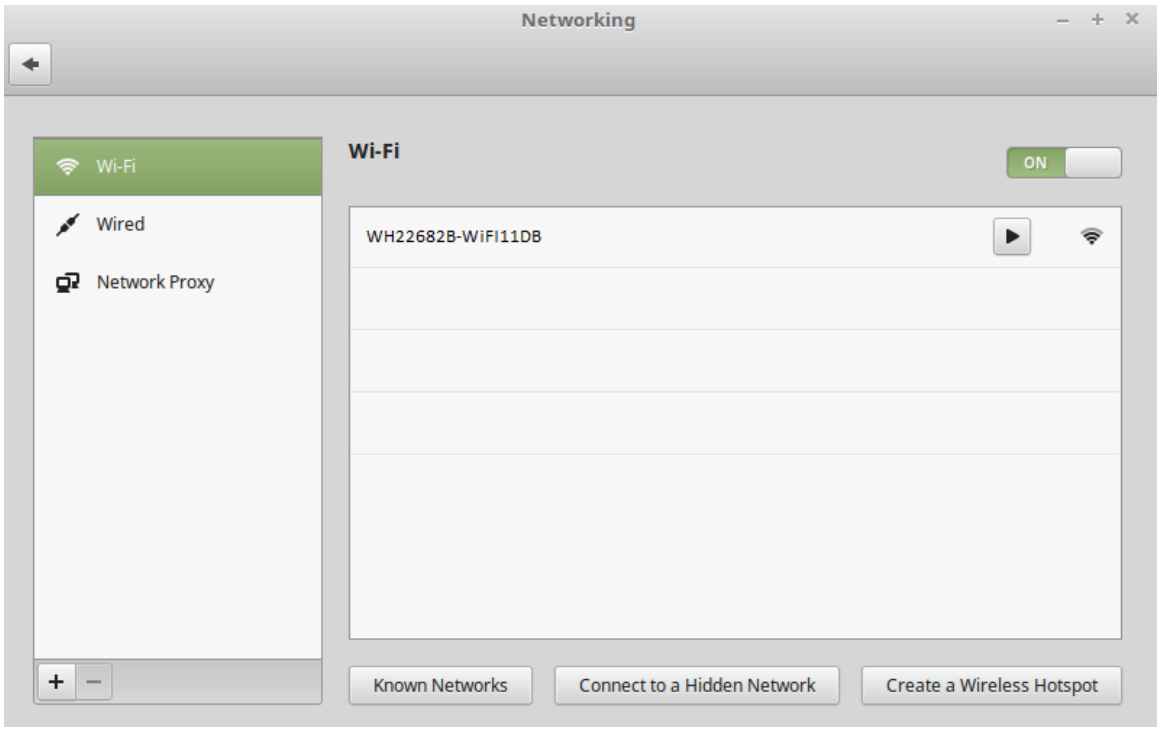

Connect to the network and then open a browser Note: you may be told network has no internet. Navigate to the following IP address 192.168.4.1 you will be presented with the following screen. (Note: default password is blank)

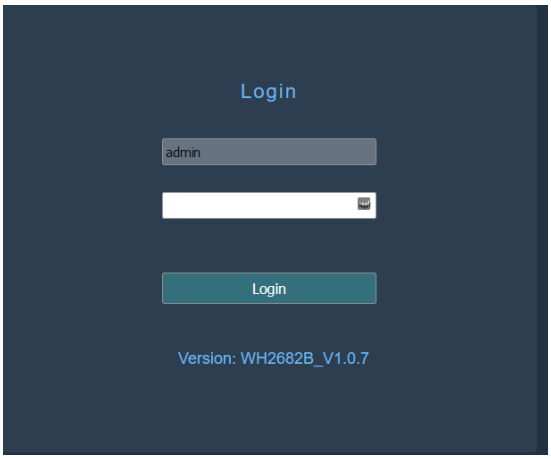

5.9 Local Device Network Settings (optional)

From your web browser, access the WS-5000-IPfrom the IP address in the previous section.

Select the Local Network tab to program the local network settings. Reference Figure 12:

1. IP Address. The default setting is receiving automatically (DCHP), which is recommended. The network will assign an IP address. To statically assign an IP address, select Static from the pull-down menu. This will prevent the IP address from changing each time you power up the WS-5000-IPreceiver.
2. Static IP Address. If Static is selected as the IP address, enter the IP address you wish to access the WS-5000-IPmodule.
3. Static Subnet Mask. Default is 255.255.255.0. This should not be changed unless you are familiar with networking and subnet masking.

©Copyright 2026, Ambient LLC. All Rights Reserved.

4. Static Default Gateway. This is typically the IP address of your router.

If you made any Static IP Address changes (not recommended), to confirm these changes, select Apply and Reboot.

Note: If you incorrectly set the static IP settings and can no longer access the OBSERVERIP2.0 2.0, press the reset button on the back of the module.

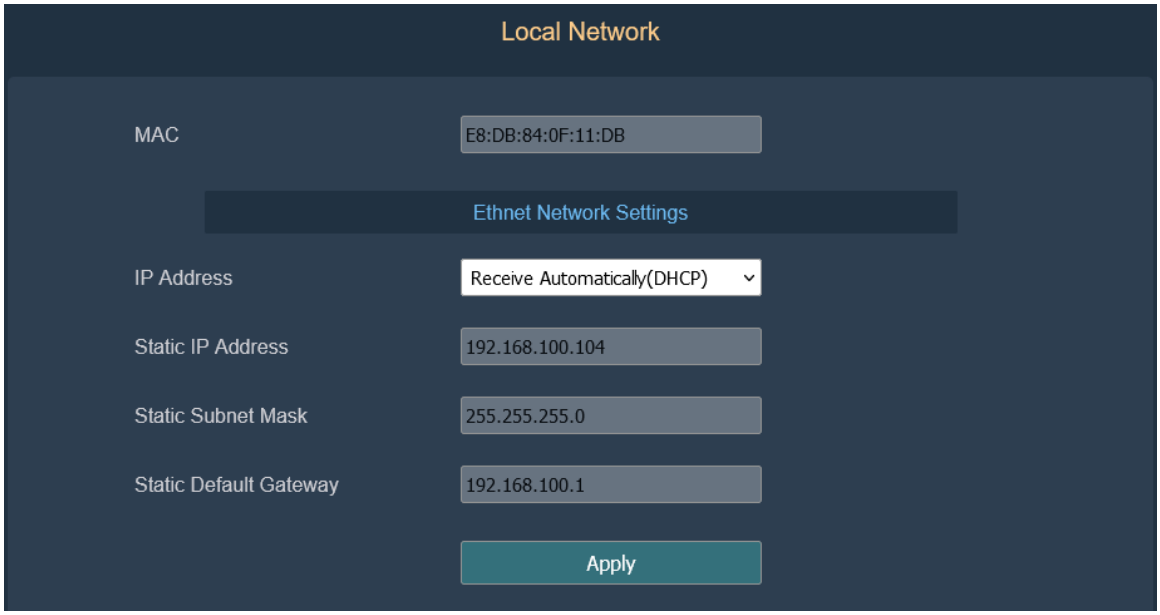

Figure 12

5.10 Weather Network Settings

Select the Weather Network tab to program the Weather Underground station settings and Ambient Weather Network settings. Reference Figure 13:

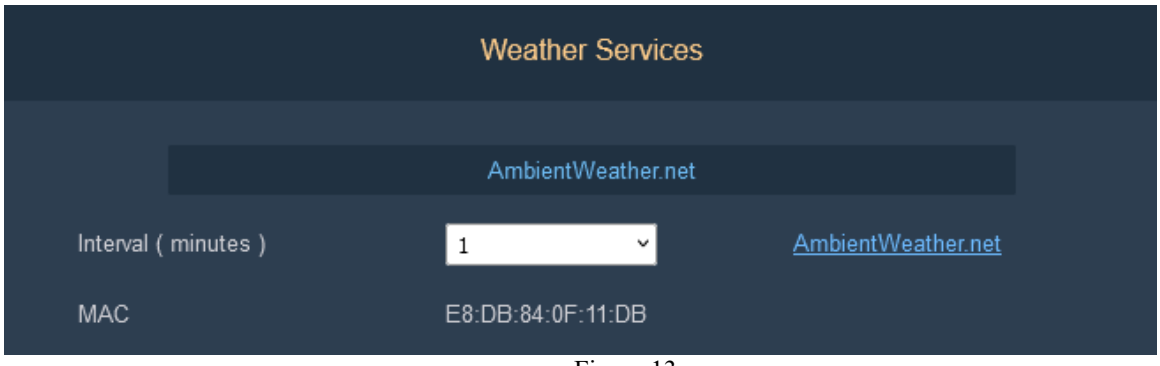

Figure 13

5.10.1 AmbientWeather.net

Reference Figure 13. Enter and update schedule and select Save. Make a note of the MAC address or. It will be required when you sign up at AmbientWeather.net.

©Copyright 2026, Ambient LLC. All Rights Reserved.

5.10.2 Additional AmbientWeather.net Features

5.10.2.1 IFTTT

The AmbientWeather.net service connects to IFTTT, the platform that allows devices and services to work together seamlessly.

Here are a few things you can do with IFTTT:

- Turn off your Rachio sprinklers when it rains, there is too much wind, or below freezing.
- Close your Hunter blinds when the sun is too intense.
- Close your garage door when it is too windy.
- Blink your hue lights when it starts raining.
- Connect to other web services, such as Gmail, Facebook, Instagram, or Pinterest.

For more information on IFTTT and how it can work for you, visit:
https://ifttt.com/ambient_weather

5.10.2.2 Compatible with Alexa

The Ambient Weather skill provides Ambient Weather personal weather station owners with the ability to get real-time, and past weather information generated by the devices they have set up at AmbientWeather.net.

Enable the skill and get started: say "Alexa, ask Ambient Weather for a weather report.". This will provide you with your outdoor weather report, but you can ask for your indoor weather report as well by saying, "Alexa, ask Ambient Weather about the indoor conditions." You can also ask for a report about a specific day, month, or year! Just say "Alexa, ask Ambient Weather about the weather yesterday." or "Alexa, ask Ambient Weather about the weather in May".

For more information and to enable this skill, visit:
https://www.amazon.com/dp/B074PGCM1D/

5.10.2.3 Works with Google Assistant

The Ambient Weather Google Assistant app provides Ambient Weather personal weather station owners with the ability to get real-time, and past weather information generated by the devices they have set up at AmbientWeather.net

Link your account to get started: say 'hey google, Ambient Weather... weather report.' This will provide you with your outdoor weather report. You can ask for your indoor weather report as well by saying, ' indoor conditions'.

You can also link the Ambient Weather app by downloading the Google Assistant.

Here are some sample commands:

- Weather Report
- Outdoor conditions
- Indoor conditions
- Yesterday's weather
- Conditions for October 15, 2017
- Conditions for September 2017
- Conditions for 2016

For more information and to enable this app, visit:
https://assistant.google.com/services/a/id/668e6f3369f27209/

©Copyright 2026, Ambient LLC. All Rights Reserved.

5.10.2.4Third party apps and integrations

https://ambientweather.com/faqs/question/view/id/1779/

Dozens of third-party app developers and API integrators offer public solutions to connect your weather station and live weather data (through AmbientWeather.net) to control smart devices, smart home devices (sprinklers, lights, etc.), view your weather data on your Apple Watch.

5.11 Sensor Array Mounting

Install the sensor array plastic mounting bracket to your 1” to 2” diameter pole, as shown in Figure 14.

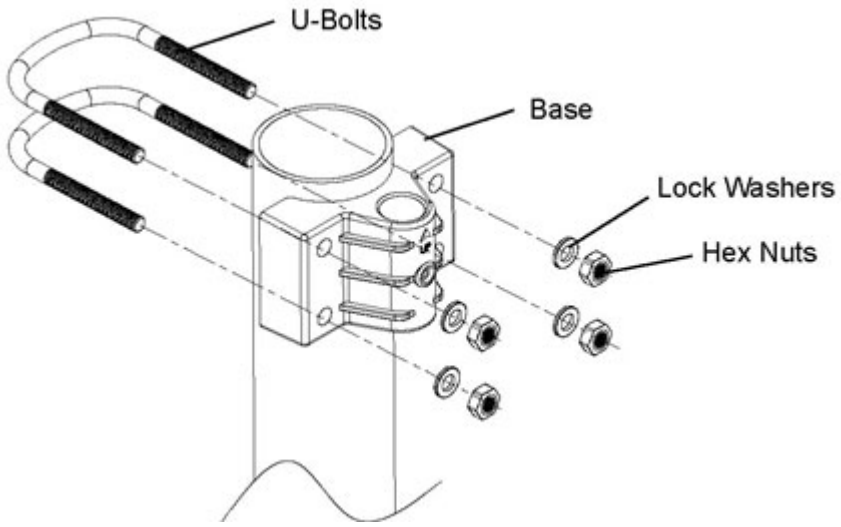

Figure 14

If the optional ultrasonic heater was purchased, and the heater cable is required, untie, and snake the heater cable through the mounting arm, as shown in Figure 2.

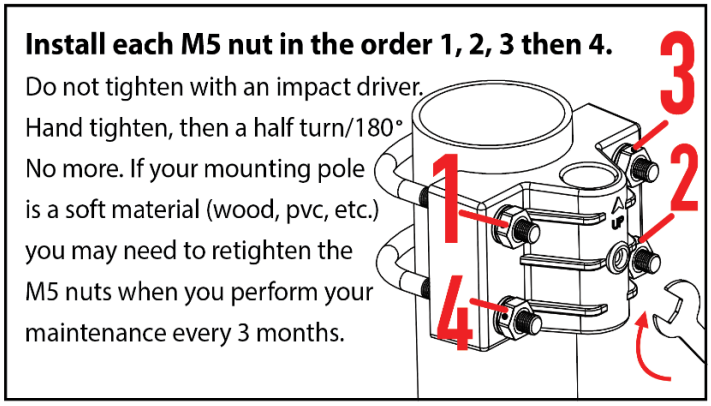

Pass the heater cable through the mounting bracket, as shown in Figure 15.
Insert the arm into the base. Align the hole in the base with the hole in the mounting arm and inset the machine screw.

©Copyright 2026, Ambient LLC. All Rights Reserved.

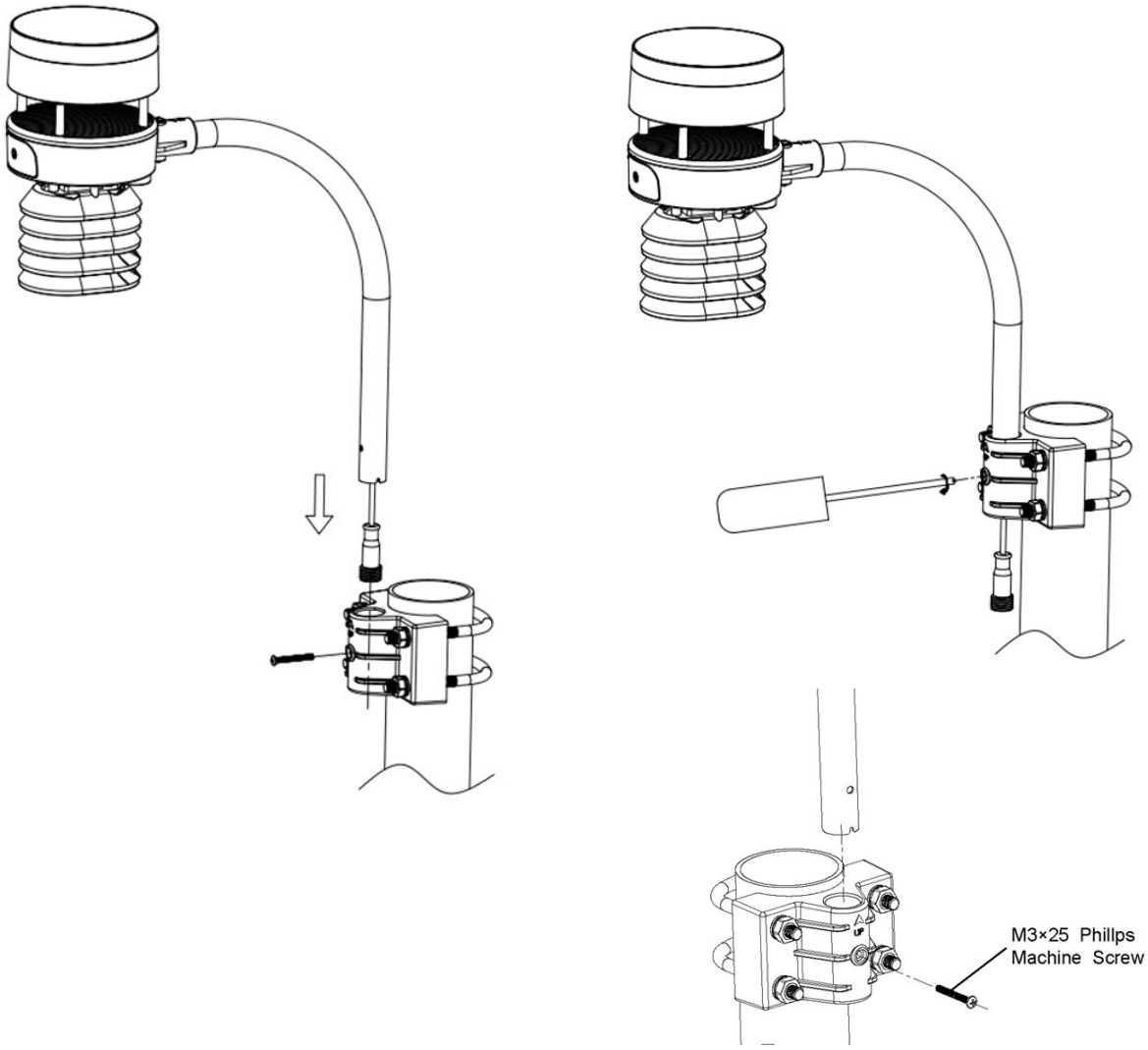

(a) (b)

Figure 15

If the optional ultrasonic heater is used, connect the heater cable to the heater, and connect to AC power.

©Copyright 2026, Ambient LLC. All Rights Reserved.

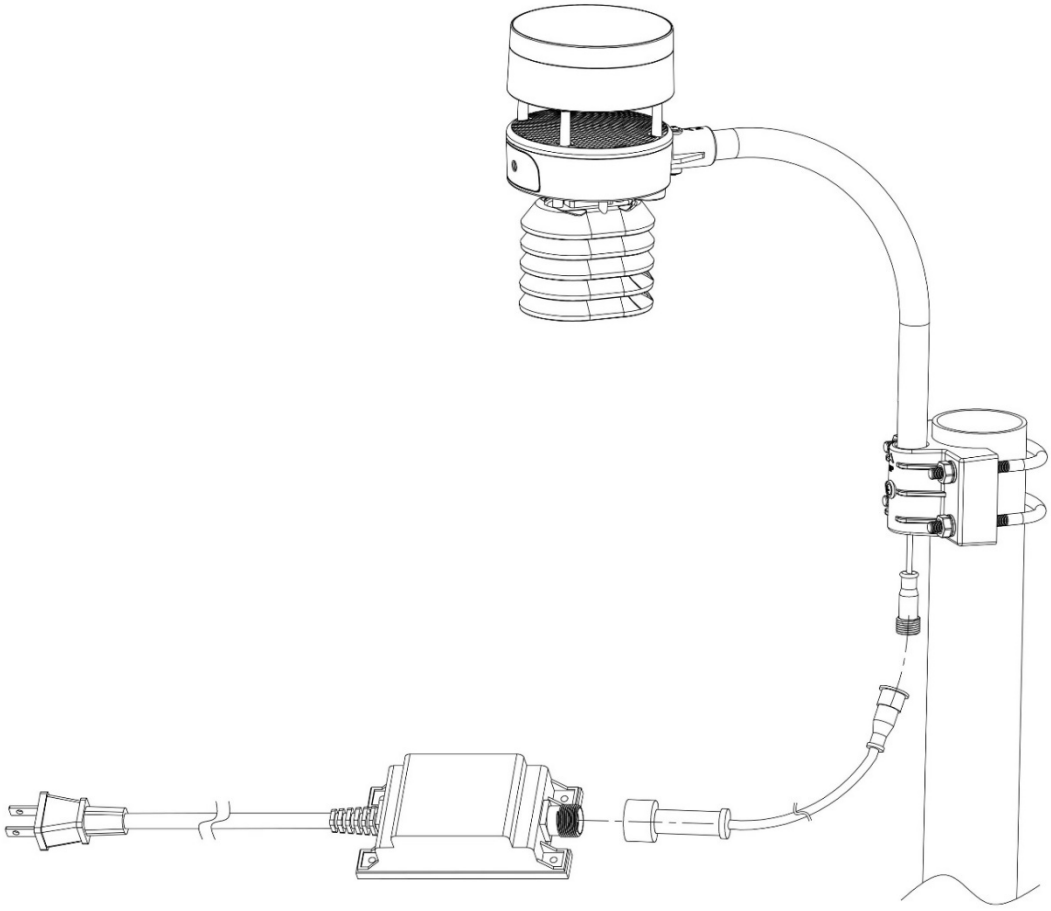

Figure 16

Locate the North marker on the base of the senor array, as shown in Figure 17. Point this marker in the direction of North, according to your GPS or compass.

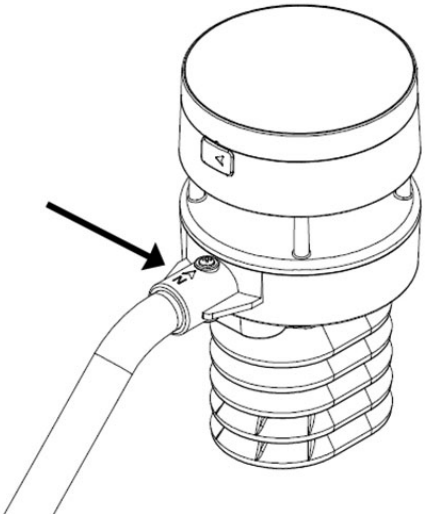

Figure 17

5.11.1 Rain Gauge Mounting

©Copyright 2026, Ambient LLC. All Rights Reserved.

Install the sensor array plastic mounting bracket to your 1” to 2” diameter pole, as shown in Figure 18

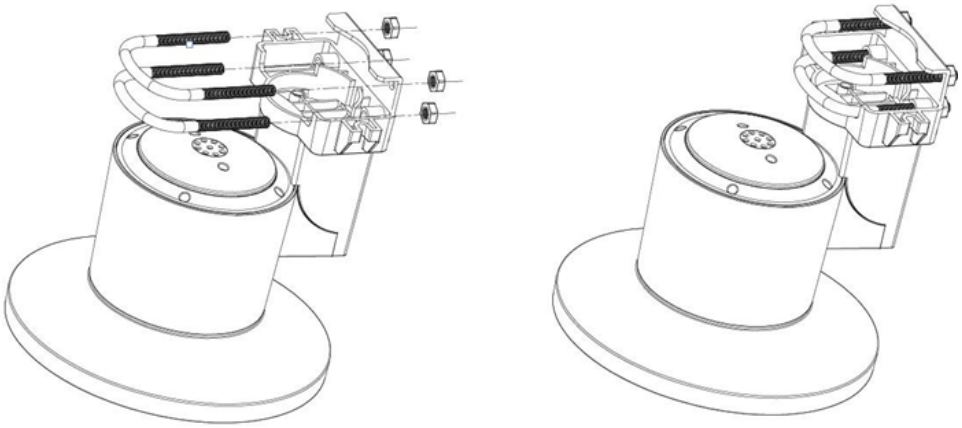

Figure 18

To mount to a wooden post or flat surface, use the two included mounting screws, as shown in Figure 192.

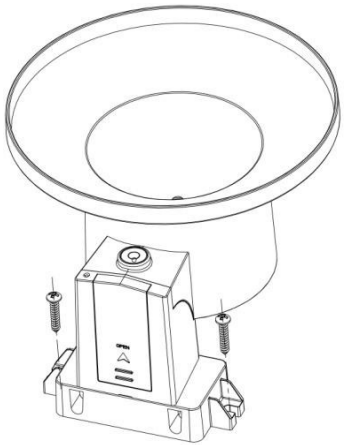

Figure 19

Use the bubble level next to the rain sensor to make sure the sensor array is completely level.

Note: If you cannot read the bubble level due to mounting constraints, place straddle a line or ruler level across the top of the rain gauge for easier viewing.

5.12 Live Data

Select the Live Data tab to view your live data from the weather station.

©Copyright 2026, Ambient LLC. All Rights Reserved.



5.12.1 Reset and Change Rain Totals

During the installation of your weather station, you may report false rain due to vibration of the tipping mechanism. To reset the rain to 0.00, select the Reset button as shown in

©Copyright 2026, Ambient LLC. All Rights Reserved.

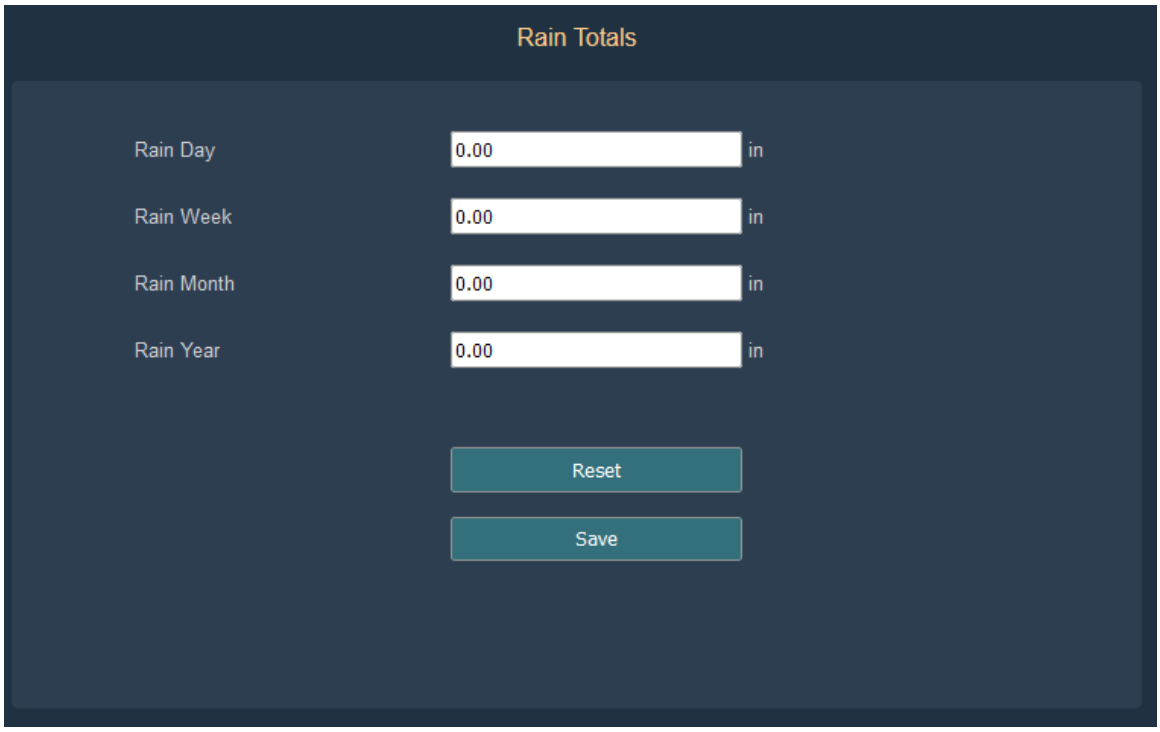

Figure **20**, or enter the Daily, Weekly, Yearly, Monthly and Yearly rain totals in the appropriate fields, and select Save.

During rain gauge cleaning, the tipping mechanism may record false rain. Before rain gauge cleaning, record the rain totals before and after the cleaning procedure, then correct the daily, weekly, monthly, and yearly totals.

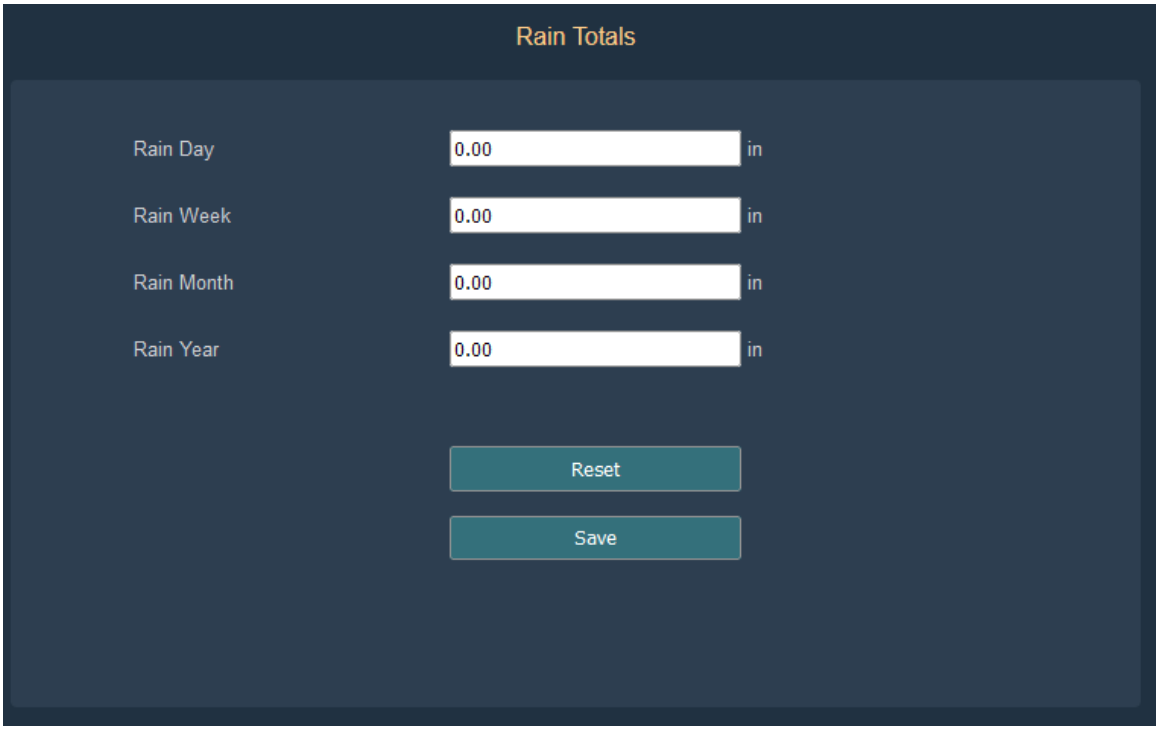

Figure 20

©Copyright 2026, Ambient LLC. All Rights Reserved.

5.13 Calibration

Select the Calibration tab to view your calibration data from the weather station. Select the Save button to confirm changes.

Calibration of most parameters is not required, except for Relative Pressure, which must be calibrated to sea-level to account for altitude effects. For more information on sea-level pressure calibration, please reference note (3) below.

5.13.1 Relative Barometric Pressure Calibration Example

The following is an example of calibrating the relative pressure. Your results will vary.

1. The local relative pressure from TV, the newspaper, or the internet for the official station in your area is 30.12 inHg.
2. From the Live Data panel, your absolute pressure (measured, and not corrected to sea-level) reads 28.90 inHg.
3. Reference Figure 21. Enter the following offset in the Calibration panel for Relative Pressure Offset:

Relative Pressure Offset = 30.12 – 28.90 = 1.22



Figure 21

©Copyright 2026, Ambient LLC. All Rights Reserved.

Parameter	Type of Calibration	Default	Typical Calibration Source
Temperature	Offset	Current Value	Red Spirit or Mercury Thermometer (1)
Humidity	Offset	Current Value	Sling Psychrometer (2)
ABS Barometer	Offset	Current Value	Calibrated laboratory grade barometer
REL Barometer	Offset	Current Value	Local airport (3)
Wind Direction	Offset	Current Value	GPS, Compass (4)
Solar Radiation	Gain	1.00	Calibrated laboratory grade solar radiation sensor
UV	Gain	126.7 lux	Solar radiation conversion from lux to w/m^2 for wavelength correction (5)
Wind	Gain	1.00	Calibrated laboratory grade wind meter (6)
Rain	Gain	1.00	Sight glass rain gauge with an aperture of at least 4" (7)

(1) Temperature errors can occur when a sensor is placed too close to a heat source (such as a building structure, the ground, or trees).

To calibrate temperature, we recommend a mercury or red spirit (fluid) thermometer. Bi-metal (dial) and digital thermometers (from other weather stations) are not a good source and have their own margin of error. Using a local weather station in your area is also a poor source due to changes in location, timing (airport weather stations are only updated once per hour) and possible calibration errors (many official weather stations are not properly installed and calibrated).

Place the sensor in a shaded, controlled environment next to the fluid thermometer, and allow the sensor to stabilize for 48 hours. Compare this temperature to the fluid thermometer and adjust the WS-5000-IPreceiver to match the fluid thermometer.

(2) Humidity is a difficult parameter to measure electronically and drifts over time due to contamination. In addition, location has an adverse effect on humidity readings (installation over dirt vs. lawn for example).

Official stations recalibrate or replace humidity sensors on a yearly basis. Due to manufacturing tolerances, the humidity is accurate to ± 5%. To improve this accuracy, the indoor and outdoor humidity can be calibrated using an accurate source, such as a sling psychrometer.

(3) The WS-5000-IPreceiver displays two different pressures: absolute (measured) and relative (corrected too sea-level).

To compare pressure conditions from one location to another, meteorologists correct pressure to sea-level conditions. Because the air pressure decreases as you rise in altitude, the sea-level corrected pressure (the pressure your location would be at if located at sea-level) is generally higher than your measured pressure.

Thus, your absolute pressure may read 28.62 inHg (969 mb) at an altitude of 1000 feet (305 m), but the relative pressure is 30.00 inHg (1016 mb).

The standard sea-level pressure is 29.92 in Hg (1013 mb). This is the average sea-level pressure around the world. Relative pressure measurements greater than 29.92 inHg (1013 mb) are considered high pressure and relative pressure measurements less than 29.92 inHg are considered low pressure.

To determine the relative pressure for your location, locate your local "official" barometric pressure reading on www.AmbientwWeather.net/baro or scan QR code below. To access the pressure relative pressure calibration screen of your console, see Section 5.13.1 / Figure 12 to enter the value.

©Copyright 2026, Ambient LLC. All Rights Reserved.



Note: Calibration setting is saved until console is factory reset. If the console location elevation changes it will need to be recalibrated.

(1) Only use this if you improperly installed the weather station sensor array and did not point the direction reference to true north.

(2) The default conversion factor based on the wavelength for bright sunlight is 126.7 lux / w/$m^{2.}$ This variable can be adjusted by photovoltaic experts based on the light wavelength of interest, but for most weather station owners, is accurate for typical applications, such as calculating evapotranspiration and solar panel efficiency.

(3) Wind speed is the most sensitive to installation constraints. The rule of thumb for properly installing a wind speed sensor is 4 x the distance of the tallest obstruction. For example, if your house is 20' tall and you mount the sensor on a 5' pole:

Distance = 4 x (20 – 5)' = 60'.

Many installations are not perfect and installing the weather station on a roof can be difficult. Thus, you can calibrate for this error with a wind speed multiplier.

In addition to the installation challenges, wind cup bearings (moving parts) wear over time.

Without a calibrated source, wind speed can be difficult to measure. We recommend using a calibrated wind meter (available from Ambient Weather) and a constant speed, high speed fan.

(4) The rain collector is calibrated at the factory based on the funnel diameter. The bucket tips every 0.01" of rain (referred to as resolution). The accumulated rainfall can be compared to a sight glass rain gauge with an aperture of at least 4". The following is a link to an accurate sight glass rain gauge:

http://www.ambientweather.com/stprraga.html

©Copyright 2026, Ambient LLC. All Rights Reserved.

Make sure you periodically clean the rain gauge funnel.

Note: The purpose of calibration is to fine tune or correct for any sensor error associated with the devices margin of error. Errors can occur due to electronic variation (example, the temperature sensor is a resistive thermal device or RTD, the humidity sensor is a capacitance device), mechanical variation, or degradation (wearing of moving parts, contamination of sensors).

Calibration is only useful if you have a known calibrated source, you can compare it against, and is optional. This section discusses practices, procedures, and sources for sensor calibration to reduce manufacturing and degradation errors. Do not compare your readings obtained from sources such as the internet, radio, television, or newspapers. The purpose of your weather station is to measure conditions of your surroundings, which vary significantly from location to location.

5.14 Registering Additional Sensors

The WS-5000-IP OBSERVERIP2.0 module supports up to 8 additional thermos-hygrometer sensors (Model WH31E, WH31P, WH31PF). Place the sensors in and around your home and monitor on AmbientWeather.net.

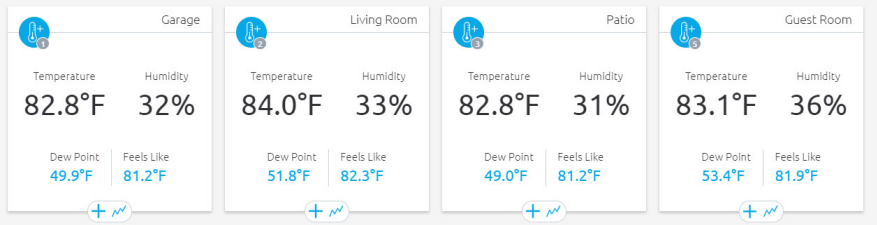

Figure 22

The data is automatically passed from the WS-5000-IP module to AmbientWeather.net based on the channel number.

Registering an additional sensor

Login to the WS-5000-IP web GUI and access Sensors ID tab.

©Copyright 2026, Ambient LLC. All Rights Reserved.

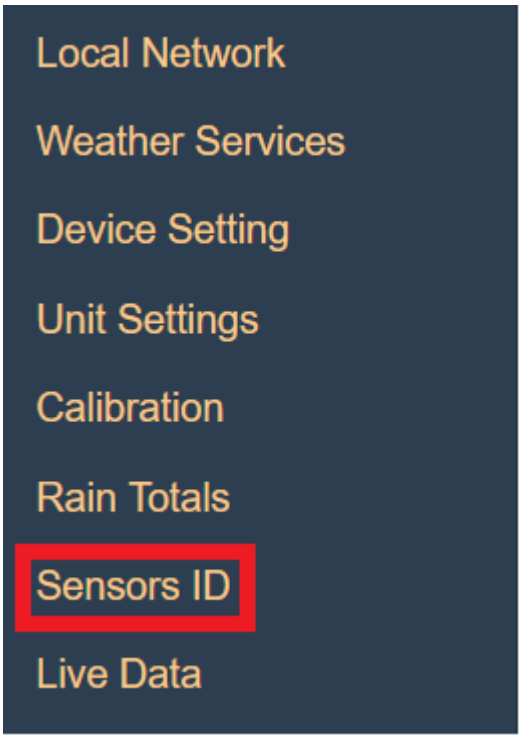

On the Sensors ID screen, you can register or re-register an additional sensor by clicking the Re-register button.



5.14.1 Indoor/Outdoor Thermo-Hygrometer, 8 Channel (optional, Model WH31E)

Note: Do not use rechargeable batteries. We recommend fresh alkaline batteries for outdoor temperature ranges between -4 °F and 140 °F and fresh lithium batteries for outdoor temperature ranges between -40 °F and 140 °F.

©Copyright 2026, Ambient LLC. All Rights Reserved.

1. Remove the battery door on the back of the transmitter(s) by sliding down the battery door, as shown in Figure 23 .

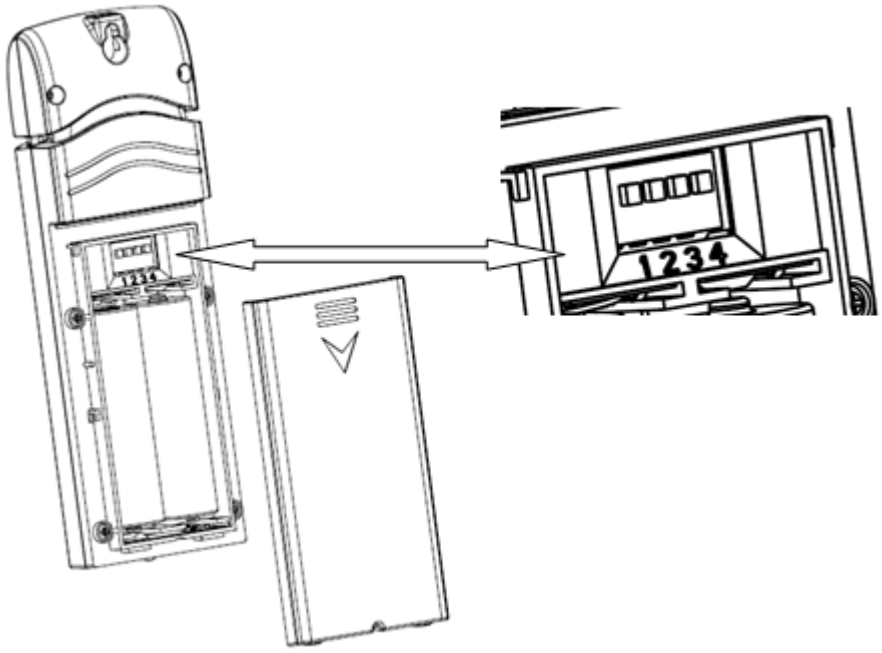

Figure 23

2. BEFORE inserting the batteries, locate the dip switches on the inside cover of the lid of the transmitter.

3. Channel Number: The WS-5000-IP supports up to eight transmitters. To set each channel number (the default is Channel 1), change Dip Switches 1, 2 and 3, as referenced in Figure 24.
4. Temperature Units of Measure: To change the transmitter display units of measure (°F vs. °C), change Dip Switch 4, as referenced in Figure 24.

Switch in down position. Switch in up position.

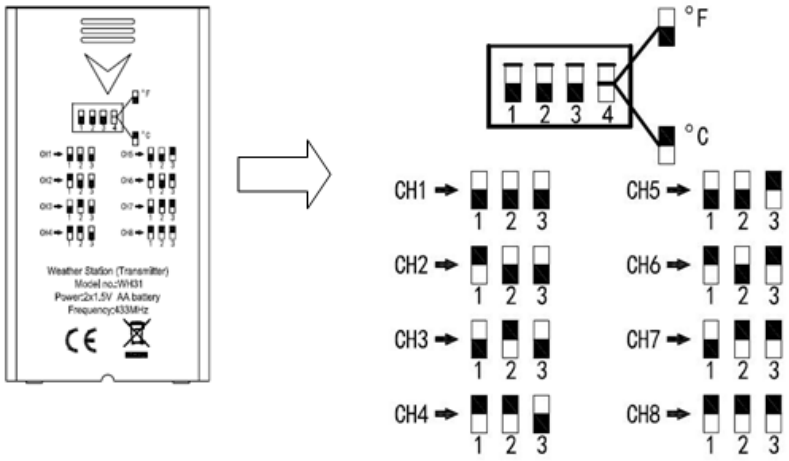

Figure 24

©Copyright 2026, Ambient LLC. All Rights Reserved.

1. Insert two AA batteries.
2. Verify the correct channel number (CH) and temperature units of measure (°F vs. °C) are on the display, as shown in Figure 25.

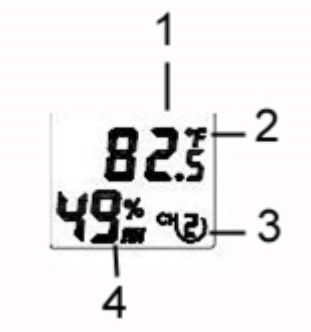

Figure 25

(1) temperature
(2) temperature units (°F vs. °C)
(3) channel number
(4) relative humidity

3. Close the battery door.
4. Repeat for the additional remote transmitters, verifying each remote is on a different channel.

5.14.2 Accessories

Description	Part Number	Image
Ultrasonic Anemometer, Outdoor Thermometer / Hygrometer, Solar Radiation and UV	WS-5000-ARRAY	
Rain Collector	WS-5000-RAIN	
Anemometer, Outdoor Thermometer / Hygrometer, Solar Radiation and UV	WS-2902-ARRAY	

©Copyright 2026, Ambient LLC. All Rights Reserved.

Indoor Air Quality Monitor	AQIN*	
Outdoor PM25 Particulate Monitor	PM25	
Indoor PM25 Particulate Monitor	PM25IN*	
Wireless Temperature and Humidity Sensor	WH31E*	
Lightning Detector	WH31L	
Leak Detector	WH31LA	
Waterproof Probe Temperature Sensor	WH31P*	
Soil moisture sensor	WH31SM	

©Copyright 2026, Ambient LLC. All Rights Reserved.

Floating Pool Thermometer	WH31PF*	

(*) The WH31E, WH31P and WH31PF share the same 8-channels.
(*) The PM25IN and AQIN share the same channel.

5.14.3 Sensor Placement

It is recommended you mount the remote sensor outside on a north facing wall, in a shaded area, at a height at or above the receiver. If a north facing wall is not possible, choose a shaded area, under an eve.

Direct sunlight and radiant heat sources will result in inaccurate temperature readings. Although the sensor is weatherproof, it is best to mount in a well-protected area, such as an eve.

1. Use a screw or nail to affix the remote sensor to the wall, as shown in Figure 6.
2. Hang the remote sensor up on string, as shown in Figure 7.

Note: Make sure the sensor is mounted vertically and not lying down on a flat surface. This will insure optimum reception. Wireless signals are impacted by distance, interference (other weather stations, wireless phones, wireless routers, TVs, and computer monitors), and transmission barriers, such as walls. In general, wireless signals will not penetrate solid metal and earth (down a hill, for example).

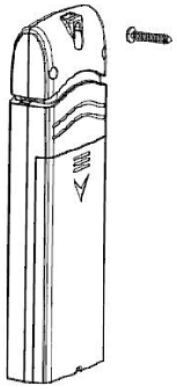

Figure 26

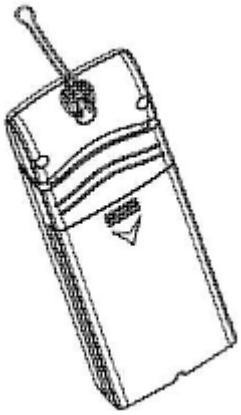

Figure 27

6. Updating Firmware

6.1 PC Users

©Copyright 2026, Ambient LLC. All Rights Reserved.

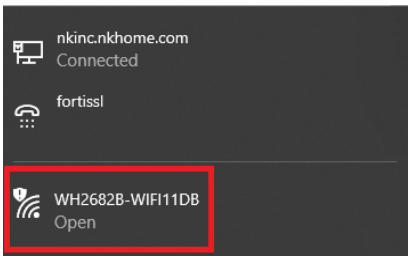

Open internet connections on your PC and look for the following WIFI network.
Connect to the network and then open a browser Note: you may be told network has no internet.

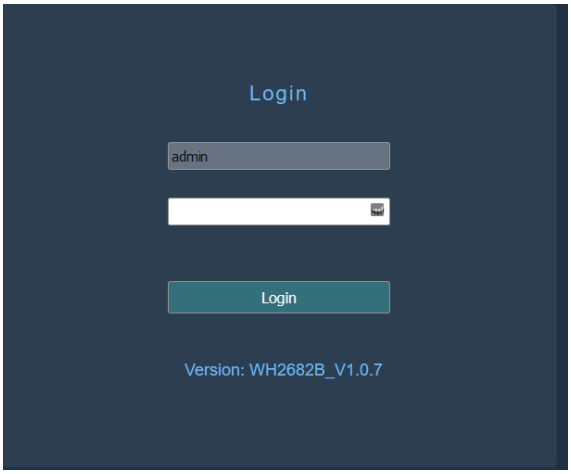

Navigate to the following IP address 192.168.4.1 you will be presented with the following screen.
(Note: default password is blank)

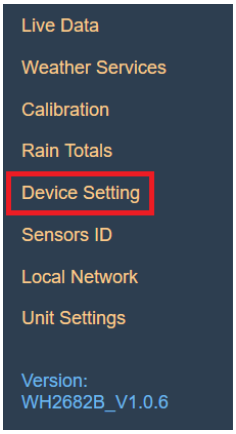

Once logged in you will want to navigate to Device Setting page

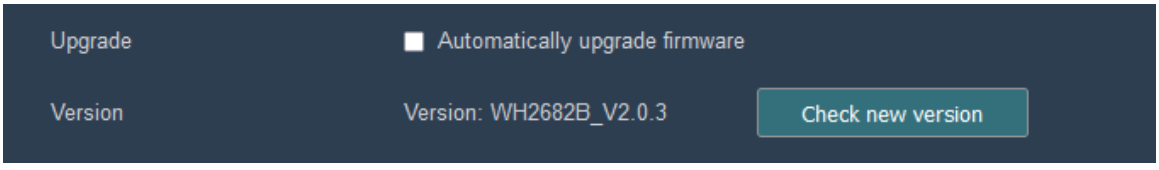

©Copyright 2026, Ambient LLC. All Rights Reserved.

You may choose to automatically upgrade firmware by clicking the checkbox and click save.
You may also check for a new version manually.

6.2 Mac Users

To find the WS-5000-IPreceiver, Open internet connections on your Mac and look for the following WIFI network.



Connect to the network and then open a browser Note: you may be told network has no internet.

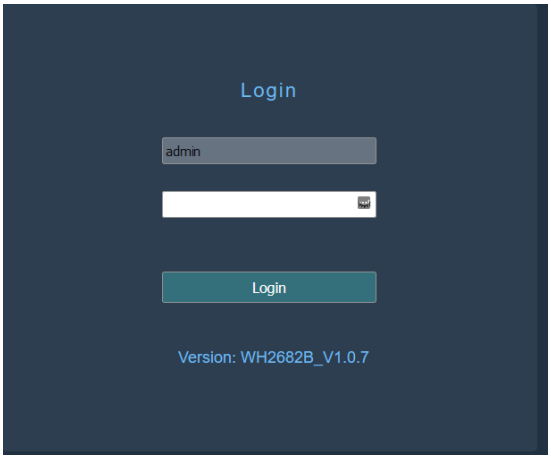

Navigate to the following IP address 192.168.4.1 you will be presented with the following screen.
(Note: default password is blank)

©Copyright 2026, Ambient LLC. All Rights Reserved.

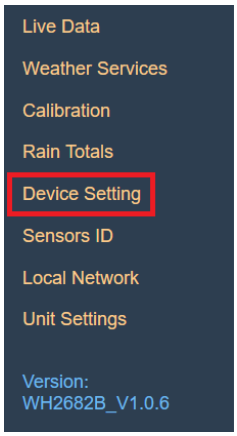

Once logged in you will want to navigate to Device Setting page

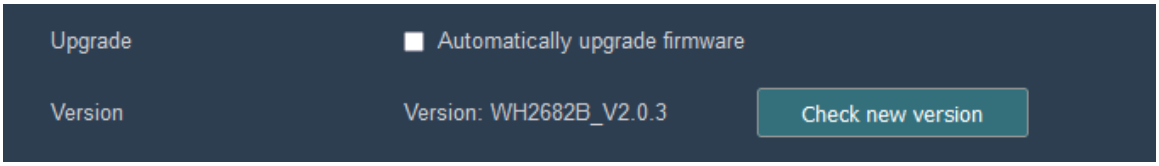

You may choose to automatically upgrade firmware by clicking the checkbox and click save.
You may also check for a new version manually.

6.3 Linux Users

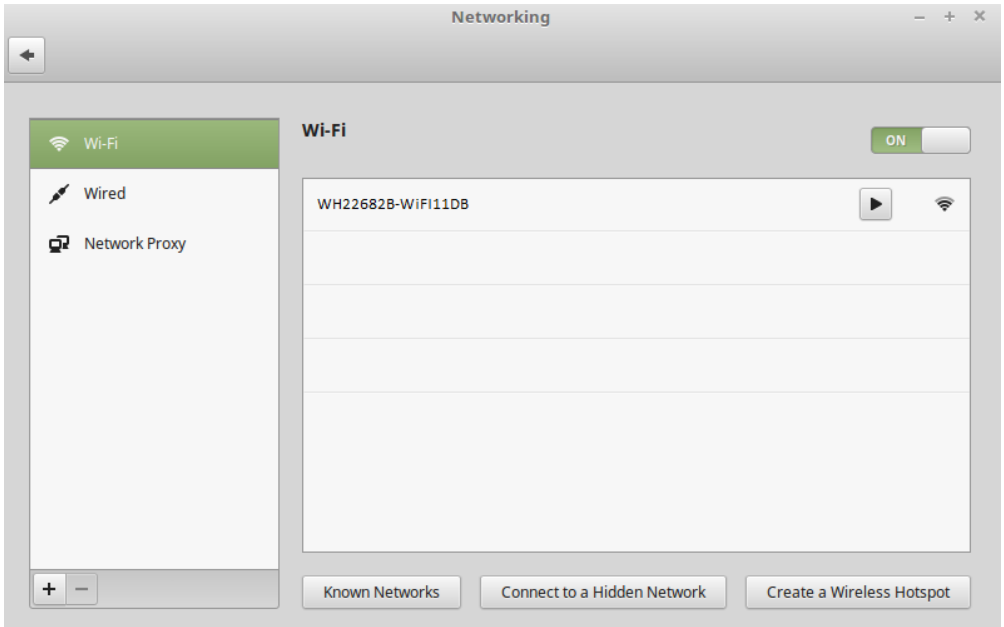

Open internet connections on your PC and look for the above WIFI network.
Connect to the network and then open a browser Note: you may be told network has no internet.

©Copyright 2026, Ambient LLC. All Rights Reserved.

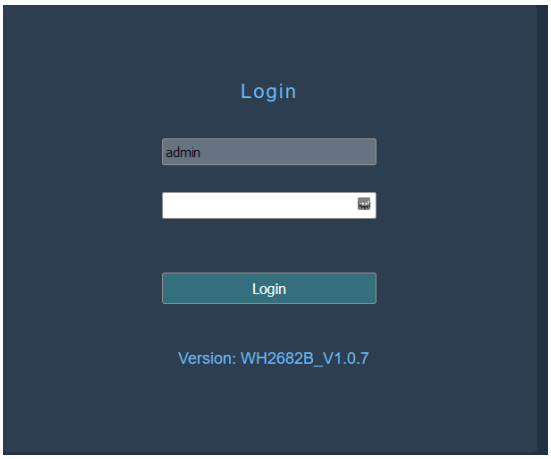

Navigate to the following IP address 192.168.4.1 you will be presented with the following screen.
(Note: default password is blank)

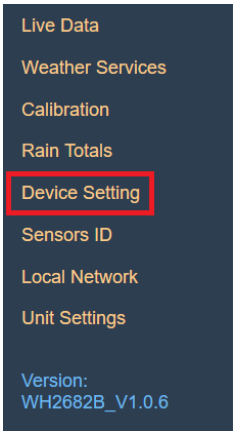

Once logged in you will want to navigate to Device Setting page

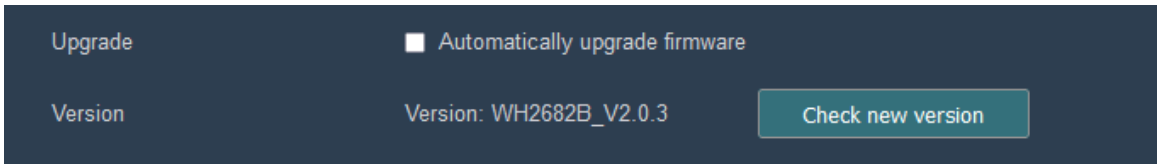

You may choose to automatically upgrade firmware by clicking the checkbox and click save.
You may also check for a new version manually.

7. Glossary of Terms

Term	Definition
Absolute Barometric Pressure	Absolute pressure is the measured atmospheric pressure and is a function of altitude, and to a lesser extent, changes in weather conditions. Absolute pressure is not corrected to sea-level conditions. *Refer to Relative Barometric Pressure.*

©Copyright 2026, Ambient LLC. All Rights Reserved.

Term	Definition
Accuracy	Accuracy is defined as the ability of a measurement to match the actual value of the quantity being measured.
Barometer	A barometer is an instrument used to measure atmospheric pressure.
Calibration	Calibration is a comparison between measurements – one of known magnitude or correctness of one device (standard) and another measurement made in as similar a way as possible with a second device (instrument).
Dew Point	The dew point is the temperature at which a given parcel of humid air must be cooled, at constant barometric pressure, for water vapor to condense into water. The condensed water is called dew. The dew point is a saturation temperature. The dew point is associated with relative humidity. A high relative humidity indicates that the dew point is closer to the current air temperature. Relative humidity of 100% indicates the dew point is equal to the current temperature and the air is maximally saturated with water. When the dew point remains constant and temperature increases, relative humidity will decrease.
Feels Like	The Feels Like temperature is a combination of Heat Index when it is hot outside, and Wind Chill when it is cold outside. Wind Chill temperature is defined by the National Weather Service for temperatures at or below 40 °F and wind speeds above 5.0 mph. Heat Index is not valid or calculated below 80 degF. Thus, when the outdoor temperature is between 40 degF and 80 degF, the feels like temperature is the same as the outdoor temperature. If the temperature is below 40 degF, the feels like temperature is the same as the outdoor temperature when the wind speed is less than 5 mph.
Hectopascals (hPa)	Pressure units in SI (international system) units of measurement. Same as millibars (1 hPa = 1 mbar)
Hygrometer	A hygrometer is a device that measures relative humidity. Relative humidity is a term used to describe the amount or percentage of water vapor that exists in air.
Inches of Mercury (inHg)	Pressure in Imperial units of measure. 1 inch of mercury = 33.86 millibars
Rain Gauge	A rain gauge is a device that measures liquid precipitation (rain), as opposed to solid precipitation (snow gauge) over a set period. All digital rain gauges are self-emptying or self-dumping (also referred to as tipping rain gauge). The precision of the rain gauge is based on the volume of rain per emptying cycle.
Range	Range is defined as the amount or extent a value can be measured.
Relative Barometric Pressure	Measured barometric pressure relative to your location or ambient conditions.
Resolution	Resolution is defined as the number of significant digits (decimal places) to which a value is being reliably measured.

©Copyright 2026, Ambient LLC. All Rights Reserved.

Term	Definition
Solar Radiation	A solar radiation sensor measures solar energy from the sun. Solar radiation is radiant energy emitted by the sun from a nuclear fusion reaction that creates electromagnetic energy. The spectrum of solar radiation is close to that of a black object with a temperature of about 5800 K. About half of the radiation is in the visible short-wave part of the electromagnetic spectrum. The other half is mostly in the near-infrared part, with some in the ultraviolet part of the spectrum.
Thermometer	A thermometer is a device that measures temperature. Most digital thermometers are resistive thermal devices (RTD). RTDs measure changes in temperature as a function of electrical resistance.
Wind Vane	A wind vane is a device that measures the direction of the wind. The wind vane is usually combined with the anemometer. Wind direction is the direction from which the wind is blowing.

Figure 62

8. Specifications

8.1 Wireless Specifications

- Line of sight wireless sensor array RF transmission (in open air): 1,000 feet, 300 feet under most conditions
- Line of sight Wi-Fi RF transmission (in open air): 80 feet
- Update Rate: Outdoor Sensor: 4.9 seconds, Indoor Sensor: 49 seconds
- Sensor Array RF Frequency: 915 MHz
- Wireless Rain Collector Frequency: 915 MHz
- Wi-Fi Tablet RF Frequency: 2.4 GHz

8.2 Measurement Specifications

The following table provides the specifications for the measured parameters.

Measurement	Range	Accuracy	Resolution
Indoor Temperature	14 to 140 °F	± 2 °F	0.1 °F
Outdoor Temperature	-40 to 149 °F (lithium batteries) -23 to 140 °F (alkaline batteries)	± 2 °F	0.1 °F
Indoor Humidity	10 to 99%	± 5%	1 %
Outdoor Humidity	10 to 99%	± 5%	1 %
Barometric Pressure	8.85 to 32.50 inHg	± 0.08 inHg (within range of 27.13 to 32.50 inHg)	0.01 inHg
Light	0 to 300,000 Lux	± 15%	1 Lux
Rain	0 to 236 in.	± 5%	0.004 in
Wind Direction	0 - 360 º	± 5º	1º
Wind Speed	0 to 89 mph (operational)	< 22 mph, +/- 1 mph ≥ 22 mph, +/-5%	1 mph

Figure 63

Transmission distance in open field: 300m (1000 ft)
Sensor reporting interval: 4.75 seconds
RF Frequency: 915 MHz

©Copyright 2026, Ambient LLC. All Rights Reserved.

8.3 Power Consumption

- OBSERVERIP2.0 Module: 5V DC Adaptor (included), Power Consumption: 0.5 Watts (1.25 Watts during Wi-Fi configuration mode)
- Outdoor sensor array: 2 x AA batteries (not included). The primary power source is the solar panel. The batteries provide backup power when there is limited solar energy. We suggest using Energizer Lithium batteries for extended life and extended operating range.
- Indoor sensor: 2 x AA batteries (not included). We suggest using Energizer Lithium batteries for extended life and extended operating range.
- Rain Gauge: 1 x AA battery (not included). We suggest using Energizer Lithium batteries for extended life and extended operating range.

9. Maintenance

1. Clean the rain gauge once every 3 months. Rotate the funnel counterclockwise and lift to expose the rain gauge mechanism, and clean with a damp cloth. Remove any dirt, debris and insects. If bug infestation is an issue, spray the array lightly with insecticide.

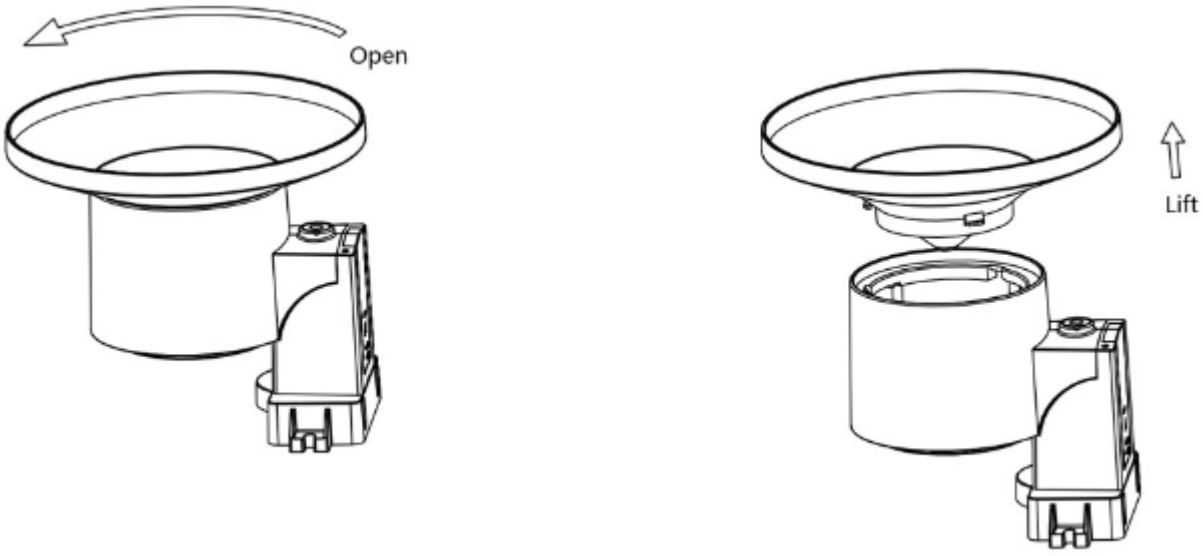

Figure 28

2. Clean the solar radiation sensor and solar panel every 3 months with damp cloth.
3. Replace batteries every 1-2 years. If left in too long, the batteries may leak due to environmental challenges. In harsh environments, inspect the batteries every 3 months (when cleaning the solar panel).
4. When replacing the batteries, apply a corrosion preventive compound on the battery terminals, available at Amazon and most hardware stores.
5. In snowy environments, spray the top of the weather station with anti-icing silicon spray to prevent snow build up.

10. Troubleshooting Guide

If your question is not answered here, you can contact us as follows:

1. Email Support: support@ambientweather.com
2. Technical Support: 480-346-3380 (M-F 8am to 3pm Arizona Time)

©Copyright 2026, Ambient LLC. All Rights Reserved.

Problem	Solution
Wireless remote (thermo-hygrometer) not reporting in to WS-5000-IPReceiver.	The maximum line of sight communication range is about 1000'. Move the sensor assembly closer to the OBSERVERIP2.0 Install a fresh set of batteries in the remote sensor(s). Make sure the remote sensors are not transmitting through solid metal (acts as an RF shield), or earth barrier (down a hill). Radio Frequency (RF) Sensors cannot transmit through metal barriers (example, aluminum siding) or multiple, thick walls. Move the WS-5000-IPreceiver around electrical noise generating devices, such as computers, TVs and other wireless transmitters or receivers.
Outdoor sensor array does not communicate to the WS-5000-IPReceiver.	The sensor array may have initiated properly, and the data is registered by the WS-5000-IPreceiver as invalid, and the sensory array must be reset. The reset button is next to the LED, near the mounting point on the sensor array. With an open-ended paperclip, press the reset button for 3 seconds to completely discharge the voltage. Take out the batteries and wait one minute, while covering the solar panel to drain the voltage. Put batteries back in and resync with WS-5000-IPreceiver by powering down and up the WS-5000-IPreceiver with the sensor array about 10 feet away. Bring the sensor array inside the house (you can disconnect it from the rest of the sensors). The LED next to the battery compartment will flash every 16 seconds. If the LED is not flashing every 16 seconds… Replace the batteries in the outside sensor array. Non-rechargeable batteries are OK for testing purposes. If the batteries were recently replaced, check the polarity. If the sensor is flashing every 48 seconds, proceed to the next step. There may be a temporary loss of communication due to reception loss related to interference or other location factors, or the batteries may have been changed in the sensor array and the WS-5000-IPreceiver has not been reset. The solution may be as simple as powering down and up the OBSERVERIP2.0 2.0. Replace the batteries in the outside sensor array. Non-rechargeable batteries are OK for testing purposes. With the sensor array and WS-5000-IP10 feet away from each other, remove AC power from the WS-5000-IPreceiver and wait 10 seconds. Re-connect power.
Absolute pressure does not agree with official reporting	You may be viewing the relative pressure, not the absolute pressure. Select the absolute pressure. Make sure you properly calibrate the sensor to

©Copyright 2026, Ambient LLC. All Rights Reserved.

Problem	Solution
station	an official local weather station. Reference Section 5.13 for details.
Data not reporting to Wunderground.com	1. Confirm your password is correct. It is the password you registered on Wunderground.com. Your Wunderground.com password cannot begin with a non-alphanumeric character (a limitation of Wundeground.com, not the station). Example, $oewkrf is not a valid password, but oewkrf$ is valid. 2. Confirm your station ID is correct. The station ID is all caps, and the most common issue is substituting an O for a 0 (or vice versa). Example, KAZPHOEN11, not KAZPH0EN11. 3. Make sure your time zone is set properly. If incorrect, you may be reporting old data, not real time data. 4. Check your router firewall settings. The WS-5000-IPsends data via Port 80.

11. Liability Disclaimer

Please help in the preservation of the environment and return used batteries to an authorized depot.
The electrical and electronic wastes contain hazardous substances. Disposal of electronic waste in wild country and/or in unauthorized grounds strongly damages the environment.

Reading the “User manual” is highly recommended. The manufacturer and supplier cannot accept any responsibility for any incorrect readings and any consequences that occur should an inaccurate reading take place.

This product is designed for use in the home only as indication of weather conditions. This product is not to be used for medical purposes or for public safety information.

The specifications of this product may change without prior notice.

This product is not a toy. Keep out of the reach of children.

No part of this manual may be reproduced without written authorization of the manufacturer.

Ambient, LLC WILL NOT ASSUME LIABILITY FOR INCIDENTAL, CONSEQUENTIAL, PUNITIVE, OR OTHER SIMILAR DAMAGES ASSOCIATED WITH THE OPERATION OR MALFUNCTION OF THIS PRODUCT.

12. FCC Statement

Statement according to FCC part 15.19:
This device complies with part 15 of the FCC rules. Operation is subject to the following two conditions:

1. This device may not cause harmful interference.
2. This device must accept any interference received, including interference that may cause undesired operation.

Statement according to FCC part 15.21:
Modifications not expressly approved by this company could void the user's authority to operate the equipment.

©Copyright 2026, Ambient LLC. All Rights Reserved.

Statement according to FCC part 15.105:
NOTE: This equipment has been tested and found to comply with the limits for a Class B digital device, pursuant to Part 15 of the FCC Rules. These limits are designed to provide reasonable protection against harmful interference in a residential installation. This equipment generates, uses, and can radiate radio frequency energy and, if not installed and used in accordance with the instructions, may cause harmful interference to radio communications.
However, there is no guarantee that interference will not occur in a particular installation. If this equipment does cause harmful interference to radio or television reception, which can be determined by turning the equipment off and on, the user is encouraged to try to correct the interference by one or more of the following measures:

- Reorient or relocate the receiving antenna.
- Increase the separation between the equipment and receiver.
- Connect the equipment into an outlet on a circuit different from that to which the receiver is connected.
- Consult the dealer or an experienced radio/TV technician for help.

13. Warranty Information

Ambient, LLC provides a 1-year limited warranty on this product against manufacturing defects in materials and workmanship.

This limited warranty begins on the original date of purchase, is valid only on products purchased and only to the original purchaser of this product. To receive warranty service, the purchaser must contact Ambient, LLC for problem determination and service procedures.

Warranty service can only be performed by an Ambient, LLC. The original dated bill of sale must be presented upon request as proof of purchase to Ambient, LLC.

Your Ambient, LLC warranty covers all defects in material and workmanship with the following specified exceptions: (1) damage caused by accident, unreasonable use or neglect (lack of reasonable and necessary maintenance); (3) damage resulting from failure to follow instructions contained in your owner's manual; (4) damage resulting from the performance of repairs or alterations by someone other than an authorized Ambient, LLC authorized service center; (5) units used for other than personal use (6) applications and uses that this product was not intended (7) the products inability to receive a signal due to any source of interference or metal obstructions and (8) extreme acts of nature, such as lightning strikes or floods.

This warranty covers only actual defects within the product itself and does not cover the cost of installation or removal from a fixed installation, normal set-up or adjustments, claims based on misrepresentation by the seller or performance variations resulting from installation-related circumstances.

14. California Prop 65

WARNING: Use of the Ambient Weather Products can expose you to chemicals, including lead and lead compounds, which are known to the State of California to cause cancer and bisphenol A (BPA), and phthalates DINP and/or DEHP, which are known to the State of California to cause birth defects or other reproductive harm.

Can I Trust that Ambient Weather Products are Safe Despite this Warning?

In 1986, California voters approved the Safe Drinking Water and Toxic Enforcement Act known as Proposition 65 or Prop 65. The purpose of Proposition 65 is to ensure that people are informed about exposure to chemicals known by the State of California to cause cancer, birth defects and/or other

©Copyright 2026, Ambient LLC. All Rights Reserved.

reproductive harm. A company with ten or more employees that operates within the State of California (or sells products in California) must comply with the requirements of Proposition 65. To comply, businesses are: (1) prohibited from knowingly discharging listed chemicals into sources of drinking water; and (2) required to provide a "clear and reasonable" warning before knowingly and intentionally exposing anyone to a listed chemical. Proposition 65 mandates that the Governor of California maintain and publish a list of chemicals that are known to cause cancer, birth defects and/or other reproductive harm. The Prop 65 list, which must be updated annually, includes over 1,000 chemicals, including many that are commonly used in the electronics industry.

Although our manufacturing process is "lead-free" and RoHS compliant, it remains possible that trace amounts of lead could be found in components or subassemblies of Ambient Weather Products. Bisphenol A (BPSA) could conceivably be present in minute amounts in our plastic housings, lenses, labels, or adhesives, and DEHP & DINP (phthalates) could possibly be found in PVC wire coatings of our cables, housings, and power cords. Unlike RoHS, Prop 65 does not establish a specific threshold for reporting on the substances of concern and instead sets forth a much less definitive standard requiring that the business demonstrate with certainty that there is "no significant risk" resulting from exposure. With respect to carcinogens, the "no significant risk" level is defined as the level which is calculated to result in not more than one excess case of cancer in 100,000 individuals exposed over a 70-year lifetime. In other words, if you are exposed to the chemical in question at this level every day for 70 years, theoretically, it will increase your chances of getting cancer by no more than 1 case in 100,000 individuals so exposed. With respect to reproductive toxicants, the "no significant risk" level is defined as the level of exposure which, even if multiplied by 1,000, will not produce birth defects or other reproductive harm. In other words, the level of exposure is below the "no observable effect level," divided by 1,000. (The "no observable effect level" is the highest dose level which has not been associated with observable reproductive harm in humans or test animals.) Proposition 65 does not clarify whether exposure is to be measured only in normal operation, or in the event of misuse such as intentionally damaging, incinerating or consuming an Ambient Weather Product or component and Ambient Weather has not attempted to evaluate the level of exposure.

A Proposition 65 warning means one of two things: (1) the business has evaluated the exposure and has concluded that it exceeds the "no significant risk level"; or (2) the business has chosen to provide a warning simply based on its knowledge about the presence of a listed chemical without attempting to evaluate the exposure. The California government has itself clarified that "The fact that a product bears a Proposition 65 warning does not mean by itself that the product is unsafe." The government has also explained, "You could think of Proposition 65 more as a 'right to know' law than a pure product safety law."

While using Ambient Weather Products as intended, we believe any potential exposure would be negligible or well within the "no significant risk" range. However, to ensure compliance with California law and our customers' right to know, we have elected to place the Proposition 65 warning signs on Ambient Weather Products.

For further information about California's Proposition 65, please visit https://oehha.ca.gov/prop65/background/p65plain.html



©Copyright 2026, Ambient LLC. All Rights Reserved.