ambient weather

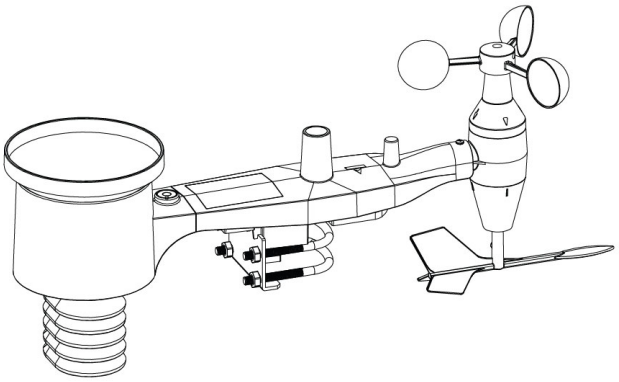

WS-1965 Quick Setup Guide

The package contains:

- All-In-One Weather Sensor Array
- Display Console with Desk Stand
- Wind Vane
- Wind Cups
- Rain Gauge Funnel
- Rain Gauge Coil
- Mounting Hardware
- Precision Screwdriver

What you will need:

- Adjustable Wrench or 10mm Wrench

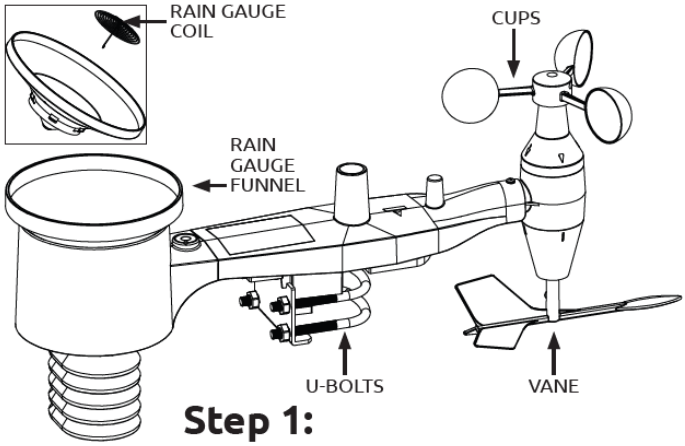

Step 1:

Install vane, cups, rain gauge funnel, rain gauge coil and U-bolts (not mounting).

Note: *We recommend assembling the station indoors and moving it outside once the setup process is complete.*

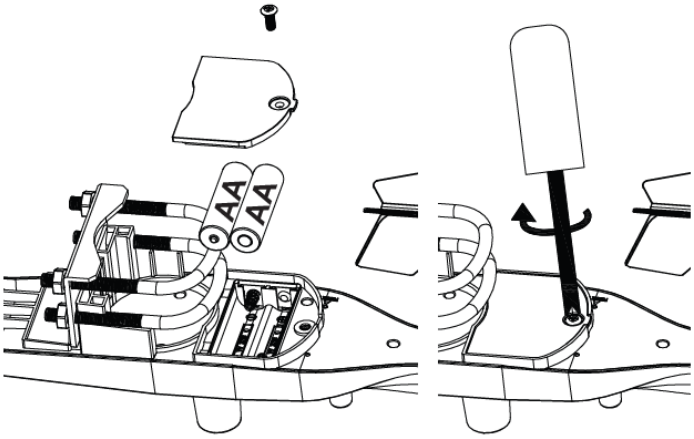

Step 2:

Insert the 2 - AA batteries into the bottom of the array and close the battery door completely. Secure with screw firmly.

 ©Copyright 2025, Ambient LLC. All Rights Reserved.

Step 3:

Power up the console using the AC adapter. The console will also hold 2-AA (not included) for backup battery power.

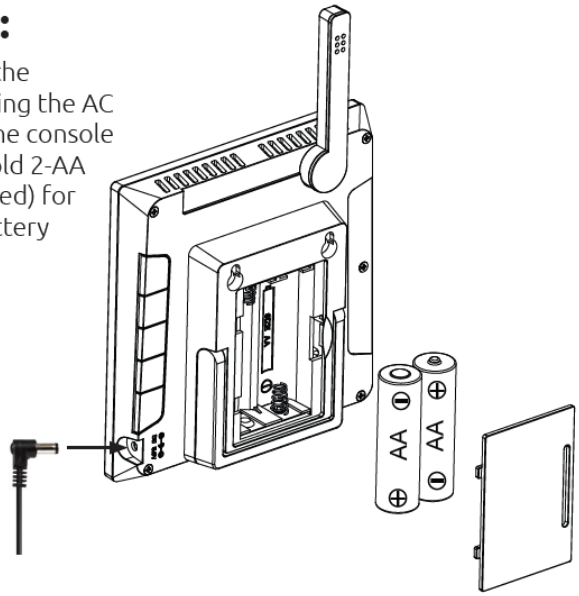

Note: *WiFi requires an AC power adapter*

Step 4: Wi-Fi Setup

The very first time the console is powered on, the console will already be in Wi-Fi Access Mode (flashing Wi-Fi icon) so go to the Wi-Fi Settings on your computer, tablet, or smartphone and select the wireless network that starts with "WS1965." Log in to the Web GUI by entering 192.168.4.1 into a web browser window/tab. Use "admin" as username, and the default password can be left blank/empty (no need to enter text).

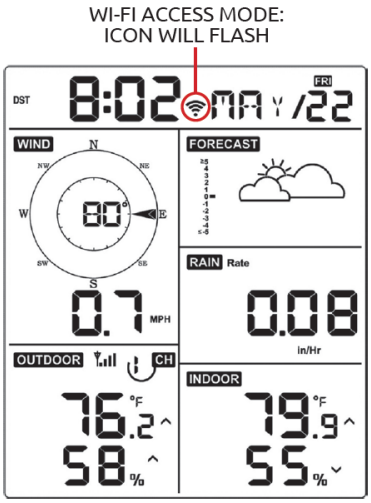

Step 4: Wi-Fi Setup *(cont.)*

If your console has already been powered on for more than 5 minutes or you need to change Wi-Fi settings at a later date, press and hold the Temp/+ and Rain/Pre button on the back of the WS-1965 console to enter Wi-Fi Access Mode. Once the Console is in Wi-Fi Access Mode, go to the Wi-Fi Settings on your computer, tablet, or smartphone and select the wireless network that starts with "WS1965." Log in to the Web GUI by entering 192.168.4.1 into a web browser window/tab. Use "admin" as username, and the default password can be left blank/empty (no need to enter text).

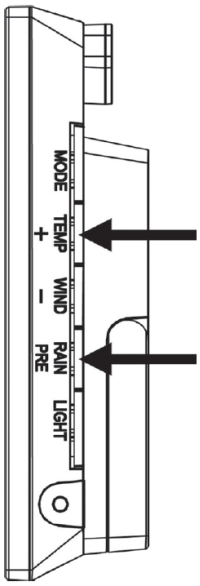

Step 5:

Use the "Local Network" tab to connect to your Wi-Fi. Select your Wi-Fi network and enter your Wi-Fi password.

Then use the "Weather Services" tab to register your device with AWN. Once complete, check your email for further steps.

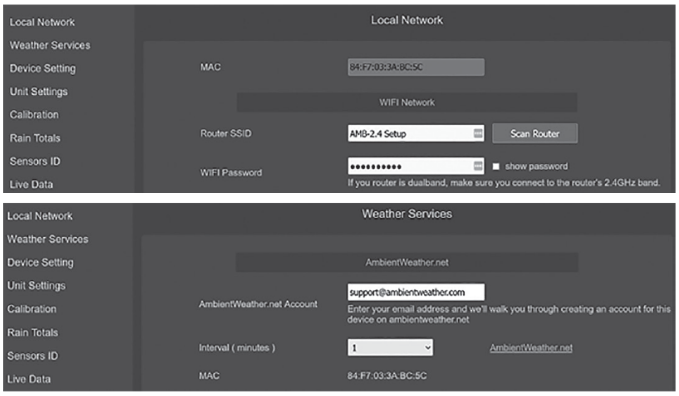

©Copyright 2025, Ambient LLC. All Rights Reserved.

Step 6:

Check your email to confirm your dashboard setup on AmbientWeather.net. Your email will look something like this, depending on if this is your first account or if you already have an account with us.



Step 7:

Install your array on a pole and tighten the U-bolts with a 10mm wrench. Please scan the QR code for mounting best practices.

Note: *Supports poles 1.25-2" OD.*

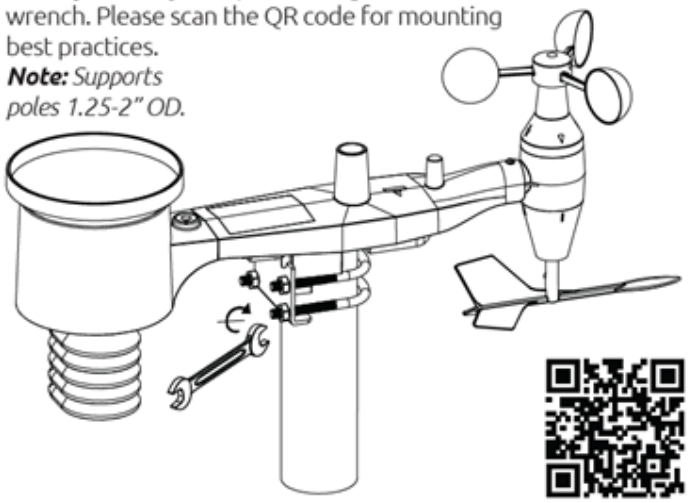

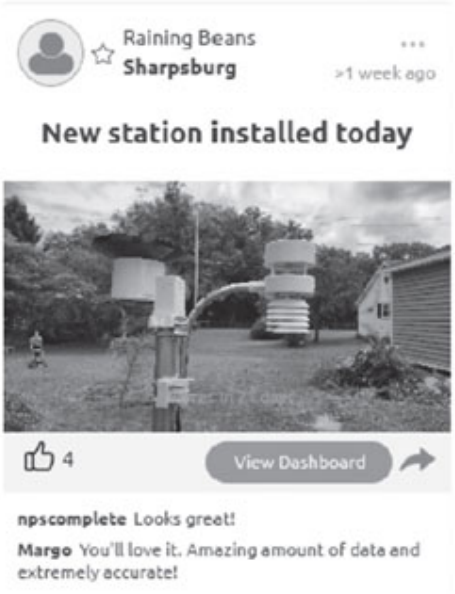

Welcome to the community!

Download the free Ambient Weather Network app for on-the-go access to your data, hyperlocal forecasts, interactive maps, and more!

Share your new weather station installation on the AWN app and tag us on your favorite social media platforms!

 ©Copyright 2025, Ambient LLC. All Rights Reserved.

AMBIENT WEATHER NETWORK™

The Ambient Weather Network is an ad-free weather platform enhanced by a powerful network of weather stations providing the most accurate hyperlocal conditions for your neighborhood, activity, or business. Connect your compatible Ambient Weather Station to access your data remotely and join one of the fastest-growing weather communities. Personalize your data tiles, set alerts, and share your weather updates with other weather enthusiasts—all for free!



Multiple Map layers

Select the radar, wind, or temperature layers or drill down to view your neighborhood's weather stations.



Create your own forecast

Add your personal weather station to the map and create your own forecast for the community.



Local Weather Cameras

Watch timelapse videos of weather conditions from local weather cameras or add your own.

 ©Copyright 2025, Ambient LLC. All Rights Reserved.

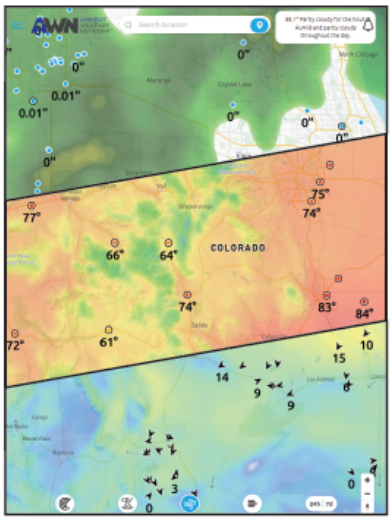

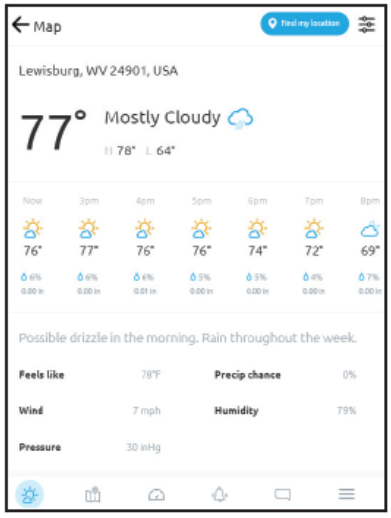

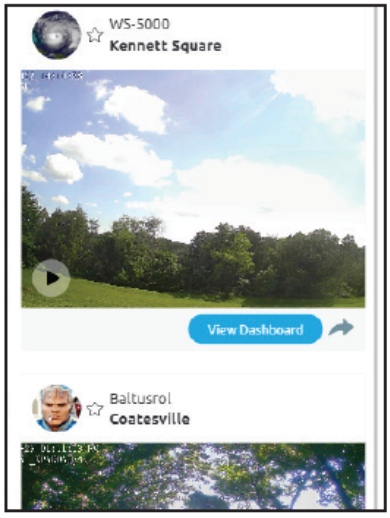

Scan the QR Code below to download the Ambient Weather Network App for free on the iOS App Store or Android Google Play Store.

Ambient Weather WS-1965 Wi-Fi Weather Station Manual

ambient weather

1. Introduction....7
2. Warnings and Cautions....7
3. Quick Start Guide....7
4. Pre-Installation Checkout and Site Survey....8
4.1 Pre-Installation Checkout....8
5 Getting Started....8
5.1 Parts List....8
5.2 Included Tools....8
5.3 Recommended Tools....8
5.4 Sensor Array Setup....9
5.4.1 Install wind vane....9
5.4.2 Install wind cups....10
5.4.3 Install U-bolts....10
5.4.4 Install Rain Gauge Funnel....11
5.4.5 Install the Funnel Coil Filter....11

 ©Copyright 2025, Ambient LLC. All Rights Reserved.

5.4.6 Install Batteries 11
5.5 Display console 12
5.5.1 Screen Display 14
5.5.2 Initial Display Console Set Up 14
5.5.3 Console Factory Reset Steps 15
6 Key function 15
7 Finding the WS-1965 from your device (computer, smart phone, or tablet with a browser) 16
7.1 PC Users 17
7.2 Mac Users 18
7.3 Linux Users 19
8. Updating console firmware 21
9. Registering with the Ambient Weather Network 21
9.1 AmbientWeather.net 22
9.1.1 Ambient Weather Dashboard Apps 23
9.1.2 IFTTT 23
9.1.3 Amazon Alexa 24
9.1.4 Works with Google Assistant 24
10.Setting mode 24
10.1 Barometric Pressure Display 25
10.1.1 Viewing Absolute vs. Relative Pressure 25
10.1.1 Rate of Change of Pressure Graph 26
10.1.2 Relative Pressure Calibration Discussion 26
10.2 Rain Display 27
10.2.1 Rain Increments of Measure 27
10.2.2 Increments of Rain Definitions 27
10.3 Wind Display 27
10.4 Temperature Display 28
10.4.1 Wind Chill, Dew Point, Heat Index Display and Multi-channel Scroll Mode 28
10.5 Alarms 28
10.5.1 Viewing High and Low Alarms 28
10.5.2 Setting High and Low Alarms 29
10.6 Backlight Operation 31
10.6.1 With AC Adapter 31
10.6.2 Without AC Adapter 31
10.6.3 Tendency Arrows 31
10.6.4 Wireless Signal Quality Indicator 32
10.7 Weather Forecasting 32
10.7.1 Storm Alert 32
10.7.2 Weather Forecasting Description and Limitations 32
10.8 Max/Min Mode 33
10.8.1 Viewing Max/Min Values 33
10.8.2 Display Wind Chill, Heat Index vs. Dew Point Max/Min Values 33
10.8.3 Display Wind Speed vs. Wind Gust Max Values 33
10.8.4 Display Hourly Rain, Rain Rate 33
10.8.5 Display Absolute and Relative Pressure Min and Max Values 34
10.9 Resynchronize Wireless Sensor 34
10.10 Calibration 34
10.10.1 Relative Barometric Pressure Calibration Example 37
10.10.2 PM25 Air Quality Sensor Calibration 38
10.10.3 AQIN Calibration 38
10.10.4 Soil Moisture Calibration 39
10.10.4.1 0% Soil Moisture Set Point 39

 ©Copyright 2025, Ambient LLC. All Rights Reserved.

10.10.4.2 100% Soil Moisture Set Point 39
10.10.4.3 Customize and Reset 39
10.10.5 Multi-Channel Temperature and Humidity Calibration 40
10.11 Install Mounting Pole 40
10.11.1 Before you mount 40
10.11.2 Site Survey 41
10.11.3 Mounting 41
11 Live Internet Publishing 42
12 Optional sensors 42
12.1 Connecting optional sensors to WS-1965 via the web GUI. 44
12.2 Indoor/Outdoor Thermo-Hygrometer, 8 Channel (optional) 45
13 Specifications 47
13.1 Wireless Specifications 47
13.2 Measurement Specifications 48
13.3 Power Consumption 48
14. Maintenance 48
15. Troubleshooting Guide 49
16 Accessories 50
17 Liability Disclaimer 50
18 FCC Statement 51
19 Warranty Information 51
20 California Prop 65 51

1. Introduction

Thank you for your purchase of the Ambient Weather WS-1965 Wi-Fi Weather Station. The following user guide provides step by step instructions for installation, operation, and troubleshooting.
The product is continuously changing and improving, particularly online services and associated applications. To download the latest manuals and additional help, please visit:

https://ambientweather.com/amws1965-wifi-weather-station-with-remote-monitoring

2. Warnings and Cautions

Warning: Any metal object may attract a lightning strike, including your weather station mounting pole. Never install the weather station in a storm.

Warning: Installing your weather station in a high location may result in injury or death. Perform as much of the initial check and operation on the ground and inside a building or home. Only install the weather station on a clear, dry day.

3. Quick Start Guide

Although the manual is comprehensive, much of the information contained may be intuitive. In addition, the manual does not flow properly because the sections are organized by components.

The following Quick Start Guide provides only the necessary steps to install, operate the weather station, and upload to the internet, along with references to the pertinent sections.

Required		
Step	**Description**	**Section**
1	Assemble and power up the outdoor sensor array	5.4.1–5.4.6
2	Power up the display console and synchronize with outdoor sensor array	5.5
3	Configure Wi-Fi via Web GUI setup	7
4	Register and upload to the Ambient Weather Network	9
5	Calibrate the relative pressure to sea-level conditions (local source) on console	10.10.1

 ©Copyright 2025, Ambient LLC. All Rights Reserved.

6	Mount the sensor array	10.11

4. Pre-Installation Checkout and Site Survey

4.1 Pre-Installation Checkout

Before installing your weather station in the permanent location, we recommend operating the weather station for one week in a temporary location with easy access. This will allow you to check out all the functions, ensure proper operation, and familiarize you with the weather station and calibration procedures. This will also allow you to test the wireless range of the weather station.

5 Getting Started

5.1 Parts List

QTY	Item
1	Display Console Frame Dimensions (LxWxH): 4.12 x 1.1 x 4.4” LCD Dimensions (LxH): 3.20 x 3.80”
1	Outdoor sensor array (Thermo-hygrometer / Rain Gauge / Wind Speed Sensor /Transmitter)
1	Wind Vane
1	Wind Cups
2	Pole mounting U-bolts
4	Pole mounting U-bolt nuts
1	Metal mounting plate to be used with U-Bolts
1	User manual
1	Zip bag for 1pc 10mm single-head wrench
1	USB cable

5.2 Included Tools

Quantity	Picture	Item
1	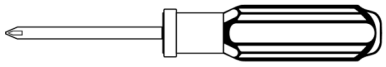	Precision Screwdriver #1 (for small Phillips screws on wind vane and wind cups

5.3 Recommended Tools

- Adjustable wrench (for mounting pole)
- Compass or GPS (for wind direction calibration)

 ©Copyright 2025, Ambient LLC. All Rights Reserved.

5.4 Sensor Array Setup

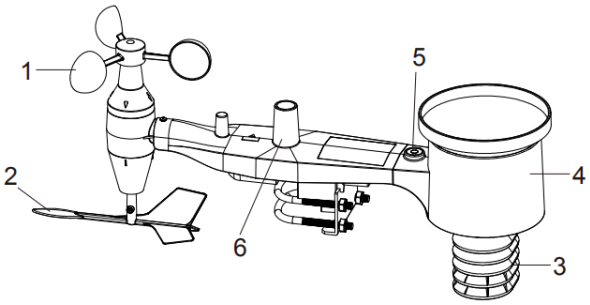

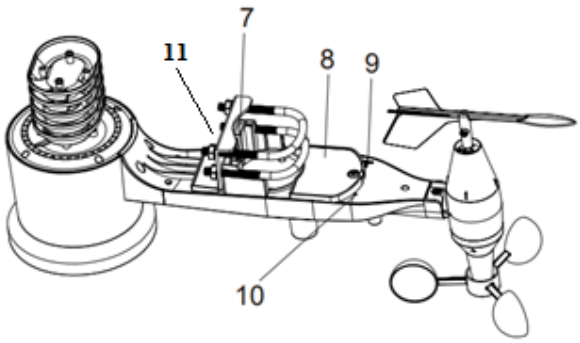

1. Wind Cups/Wind Speed Sensor
2. Wind Vane
3. Thermometer-hygrometer sensor and solar radiation shield
4. Rain collector
5. Bubble level
6. Antenna
7. U-Bolt
8. Battery compartment
9. Reset button
10. LED transmitter Indicator
11. Metal Mounting plate.

5.4.1 Install wind vane

Push the wind vane onto the shaft on the top of the sensor, until it stops moving further, as shown in figure 1.
Tighten the set screw, with the provided Philips screwdriver (size PH0), until the wind vane cannot be removed from the axle, as shown in figure 2. Make sure the wind vane spin freely. The wind vane's movement has a small amount of resistance, which is helpful in providing steady wind direction measurements.

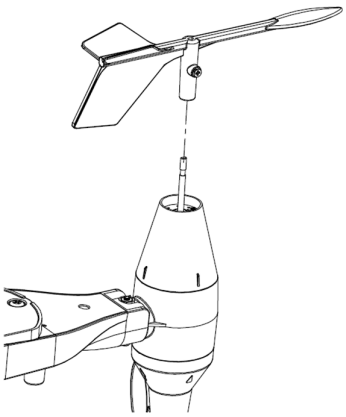

Figure 1

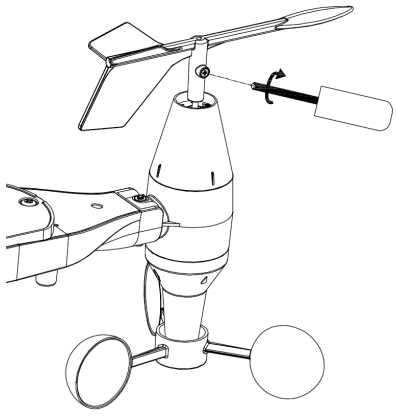

Figure 2

There are four alphabet letters of "N"," E"," S" and "W" around the wind direction, representing for the direction of North, East, South and West. Wind direction sensor must be adjusted so that the directions on the sensor are matching with your real location. Permanent wind direction error will be installation. when the wind direction sensor is not positioned correctly during installation.

 ©Copyright 2025, Ambient LLC. All Rights Reserved.

5.4.2 Install wind cups

Push the wind speed into the shaft as shown in Figure 3.
Tighten the set screw with as shown in figure 4. Make sure the wind speed can spin freely.

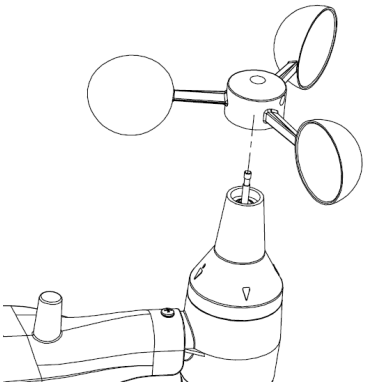

Figure 3

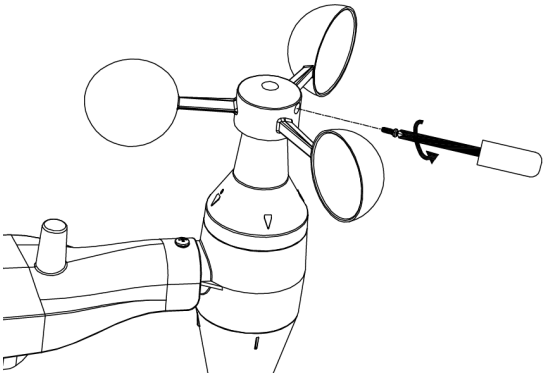

Figure 4

5.4.3 Install U-bolts

Installation of the U-bolts, which are in turn used to mount the sensor package on a pole, requires installation of an included metal plate to receive the U-bolt ends. The metal plate, visible in Figure 5, has four holes through which the ends of the two U-Bolts will fit. The plate itself is inserted in a groove on the bottom of the unit. Note that one side of the plate has a straight edge (which goes into the groove), the other side is bent at a 90-degree angle and has a curved profile (which will end up "hugging" the mounting pole). Once the metal plate is inserted, remove nuts from the U-Bolts and insert both U-bolts through the respective holes of the metal plate as shown in Figure 5.

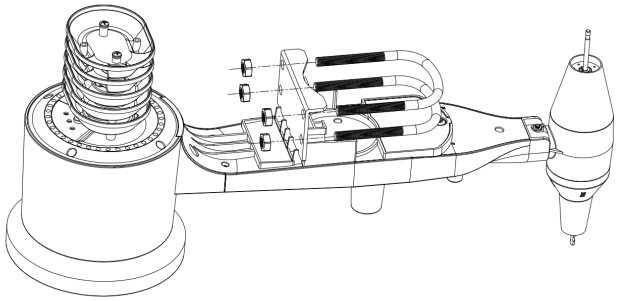

Figure 5

Loosely screw on the nuts on the ends of the U-bolts. You will tighten these later during final mounting. Final assembly is shown in Figure 6.

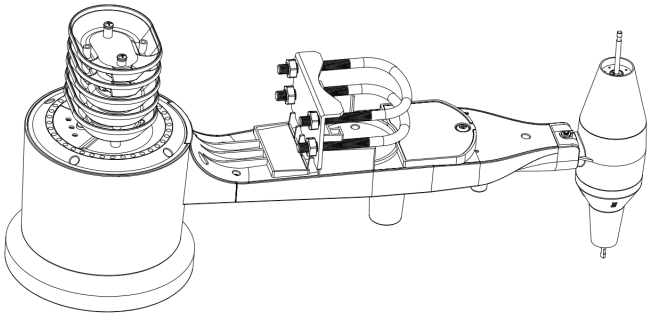

Figure 6

 ©Copyright 2025, Ambient LLC. All Rights Reserved.

The plate and U-Bolts are not yet needed at this stage but doing this now may help avoid damaging wind vane and wind speed cups later.

5.4.4 Install Rain Gauge Funnel

Install the rain gauge funnel. Rotate clockwise to attach the funnel to the outdoor sensor.

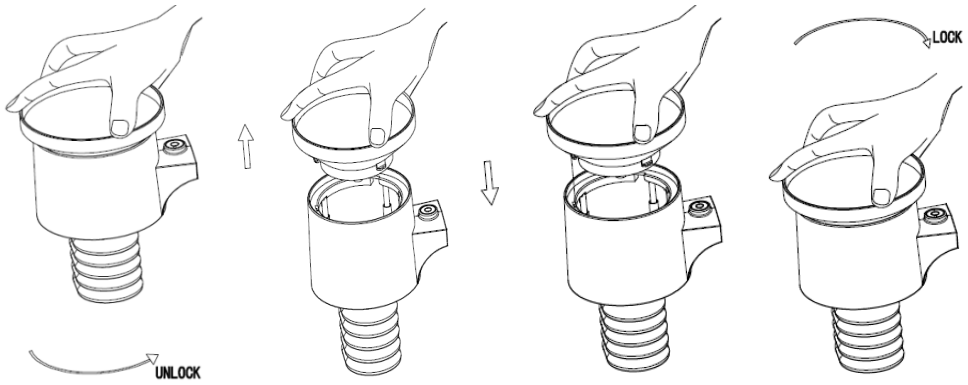

5.4.5 Install the Funnel Coil Filter

To install the funnel coil filter, press the coil until the hook is inside the hole at the bottom of the funnel, and locked in place. The spring tension will keep the filter sit tight on the funnel.

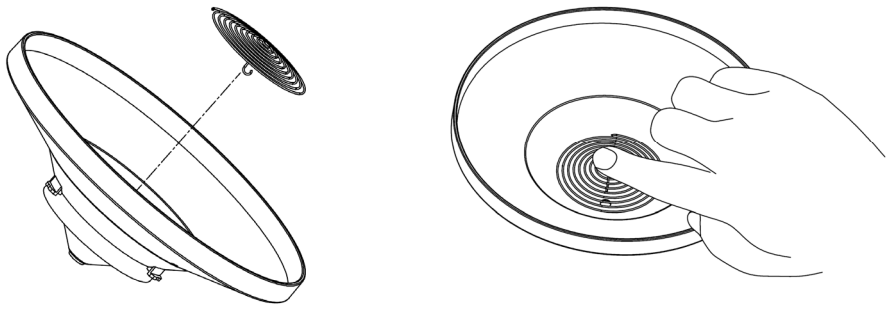

Figure 7

5.4.6 Install Batteries

Insert 2 x AA batteries in the battery compartment. The LED indicator on the back of the transmitter will turn on for four seconds and normally flash once every 16 seconds (the sensor transmission update period).

 ©Copyright 2025, Ambient LLC. All Rights Reserved.

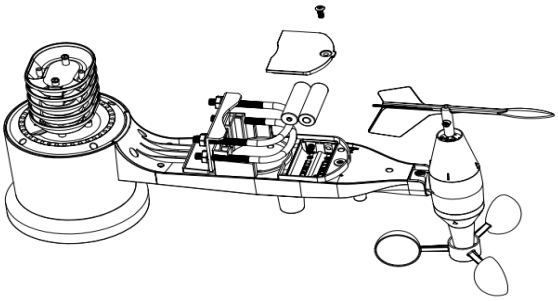

Figure 8

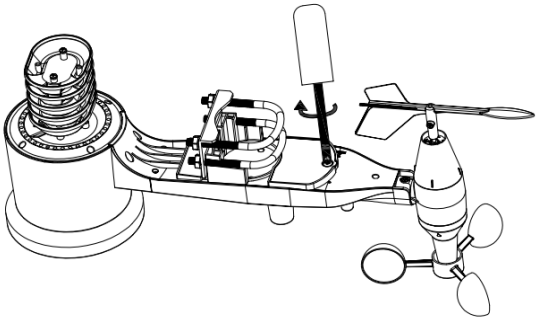

Figure 9

Note: If no LED light up or is permanently on, make sure the batteries are inserted the correct way or a proper reset has happened. Do not install the batteries backwards. You can permanently damage the outdoor sensor

Note: We recommend 2 x AA Energizer lithium batteries for cold weather climates, but alkaline batteries are enough for most climates. We do not recommend rechargeable batteries. They have lower voltages, they do not operate well at wide temperature ranges, and do not last as long, resulting in poorer reception.

5.5 Display console

The front and back of the display console is shown in Figure10 and Figure 11.

 ©Copyright 2025, Ambient LLC. All Rights Reserved.

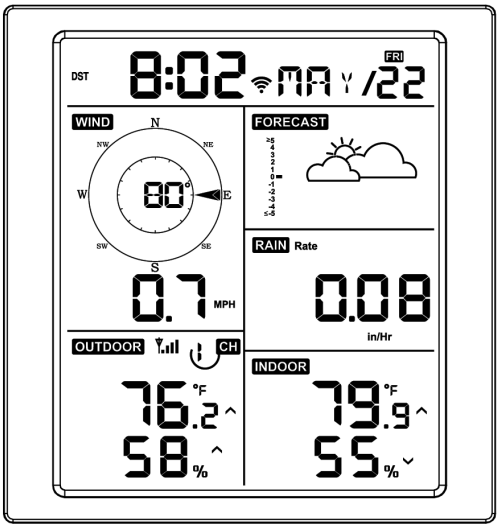

Figure 10

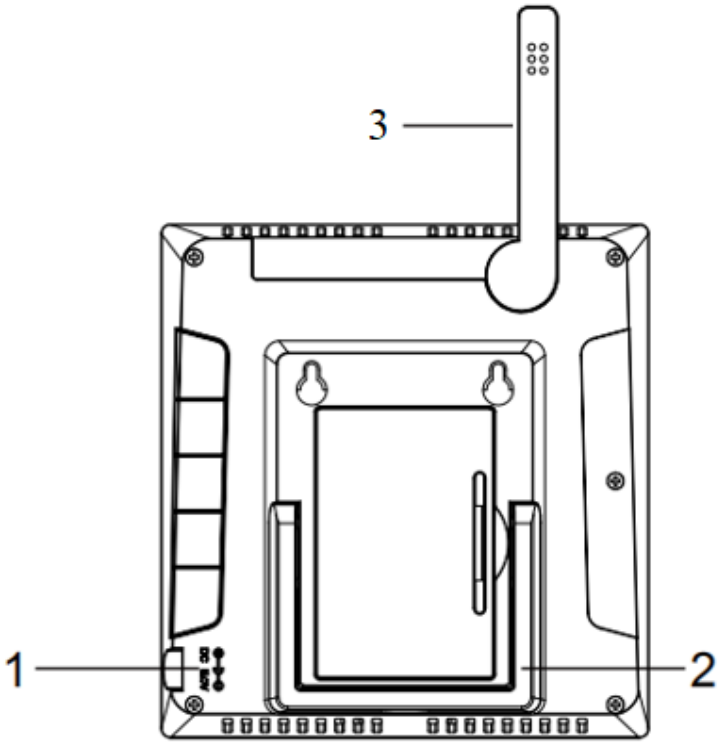

Figure 11

(1) A/C power port for A/C adapter part# WS-1965-AC
(2) Unfold the desk stand and place 5 to 10 feet away from the outdoor sensor array per Figure 11.
(3) Sensor arm containing temperature and humidity sensor.
(4) Remove the battery door on the back of the console and insert 2 x AA Alkaline or Lithium batteries per Figure 12. Wait several minutes for the remote sensors to synchronize with the display console.

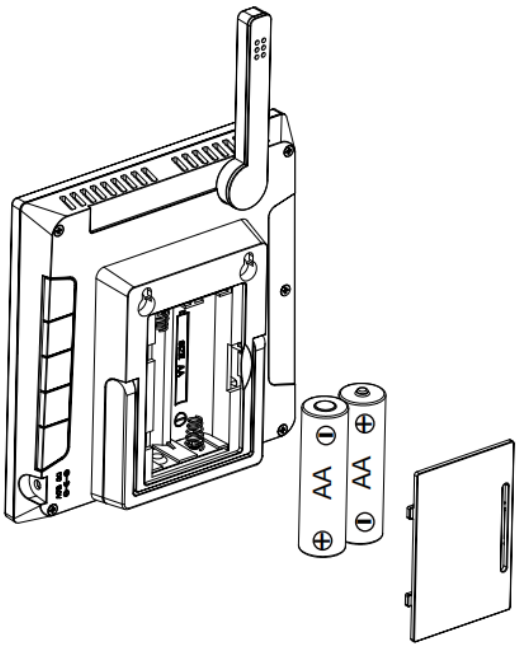

Figure 12

 ©Copyright 2025, Ambient LLC. All Rights Reserved.

5.5.1 Screen Display

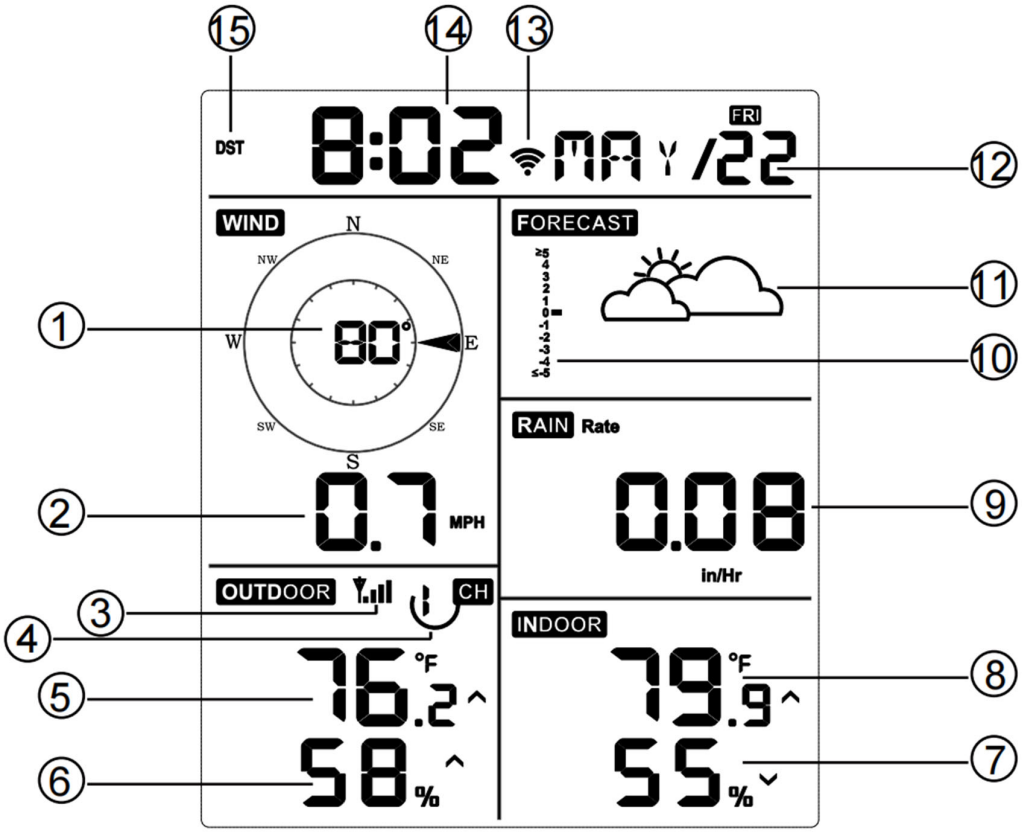

Figure 13

1.Wind direction	9. Rainfall
2. Wind speed	10. Rate of Change of Pressure Graph
3. RF icon	11. Weather forecast
4. 8 Channel Indoor/Outdoor Thermo-Hygrometer recycle icon (optional)	12. Date
5. Outdoor temperature	13. WIFI icon
6. Outdoor humidity	14. Time
7. Indoor humidity	15. Daylight Savings Time (DST)
8. Indoor temperature	

5.5.2 Initial Display Console Set Up

Insert the batteries to power up the display console.

The unit will show software version number 2 seconds after power reset.
The unit will turn on all segments of the LCD for 3 seconds after power reset, the display will attempt to register the outdoor sensor array for 3 minutes.

 ©Copyright 2025, Ambient LLC. All Rights Reserved.

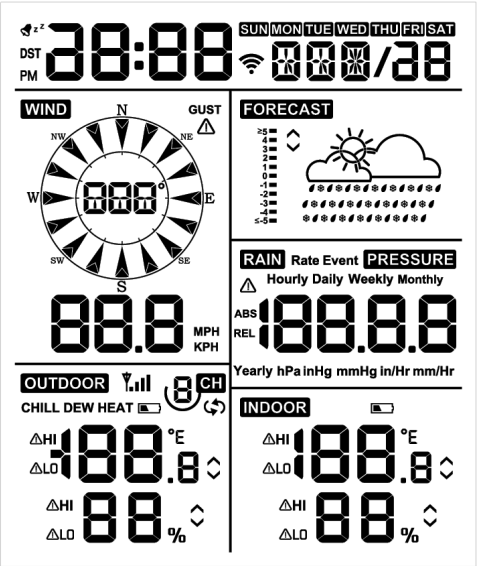

Figure 14

5.5.3 Console Factory Reset Steps

Under AC power (using optional AC adapter): press and hold Light + Mode (Figure 15) for 5 seconds

Under battery power (no AC adapter connected): press and hold Light button (Figure 15) for 2 seconds until “WAK” is displayed then press and hold Light + Mode (Figure 15) for 5 seconds
Note: WAK mode will revert to normal after 3 seconds.

6 Key function

The console has five keys for easy operation

 ©Copyright 2025, Ambient LLC. All Rights Reserved.

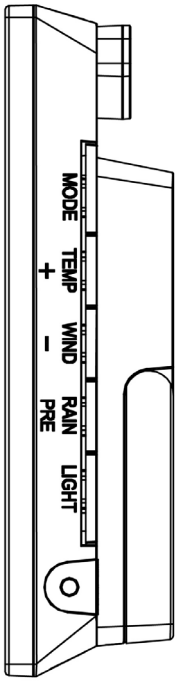

Figure 15

Key	Description
MODE	• Press and hold for two seconds to enter the Set Mode. • Press to switch between Normal Mode, Max Mode, Min Mode, High Alarm Mode, Low Alarm Mode, MAC address display Mode
TEMP+	• Press to switch between Outdoor Temperature, Wind Chill, Dew Point, Heat Index, 8 channel optional Indoor/Outdoor Thermo-hygrometer, Scrolling Mode
WIND -	• Press to switch between average wind speed and wind gust. • Press and hold for two seconds to switch the wind direction to display in degrees or in letters.
RAIN/PRE	• Press and hold for two seconds switch between Rain and Pressure. • While in Rain mode, press to switch between Rain Rate, Rain Events, Hourly Rain, Daily Rain, Weekly Rain, and Monthly Rain • While in Pressure mode, press to switch between Relative pressure and Absolute pressure
LIGHT	• Press to adjust the LCD backlight brightness (high, medium, and off). • Press to exit the SET mode at any time.

7 Finding the WS-1965 from your device (computer, smart phone, or tablet with a browser)

To send weather data to these services you must configure Wi-Fi via Web GUI to connect your console to the internet.

During console credentials setup, firmware update, the communication between device and console is based on Wi-Fi so your device needs to be able to connect to the console Wi-Fi.

Note: To place device in Wi-Fi access point mode please hold the Rain and Temp buttons on the back of the console. (Figure 16) The Wi-Fi symbol will begin to flash. (Figure 17)

 ©Copyright 2025, Ambient LLC. All Rights Reserved.

Note: Console Wi-Fi can operate on battery power for a limited time this will require the modem or router to be on battery backup such as UPS also to continue transmitting.

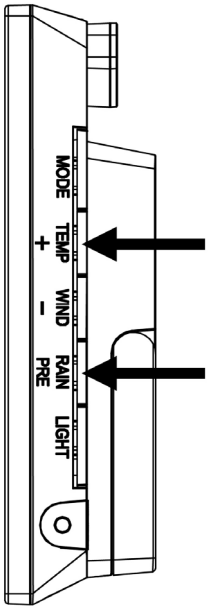

Figure 16

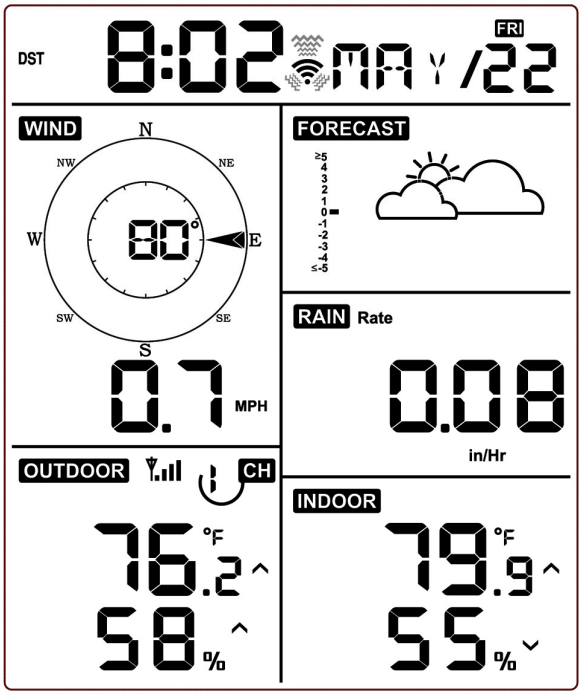

Figure 17

7.1 PC Users

To find the WS-1965, connect to power and look for the following WIFI network.

 ©Copyright 2025, Ambient LLC. All Rights Reserved.

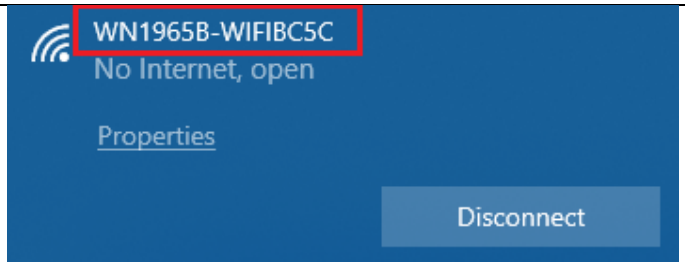

Connect to the network and then open a browser **Note: you may be told network has no internet.**

Navigate to the following IP address **192.168.4.1** you will be presented with the following screen.

(Note: default password is blank)

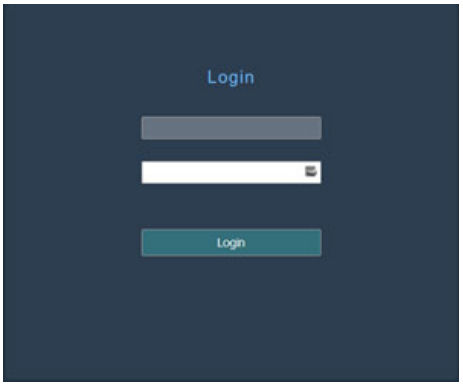

Once logged in you will want to navigate to the local network screen to connect to WIFI.

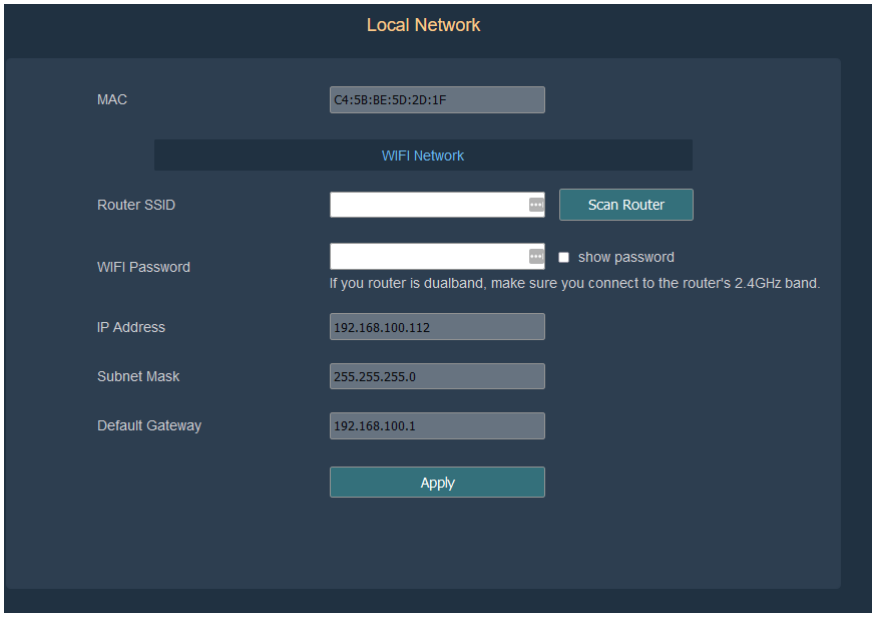

7.2 Mac Users

To find the WS-1965, connect to power and look for the following WIFI network.

 ©Copyright 2025, Ambient LLC. All Rights Reserved.

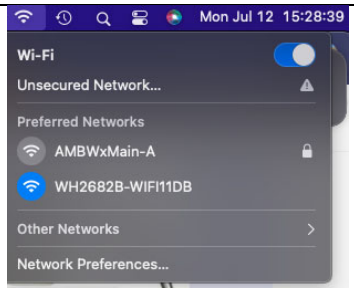

Connect to the network and then open a browser **Note: you may be told network has no internet.**

Navigate to the following IP address 192.168.4.1 you will be presented with the following screen.
(Note: default password is blank)

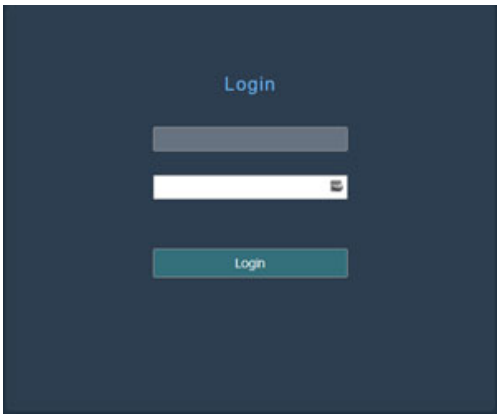

Once logged in you will want to navigate to the local network screen to connect to WIFI.

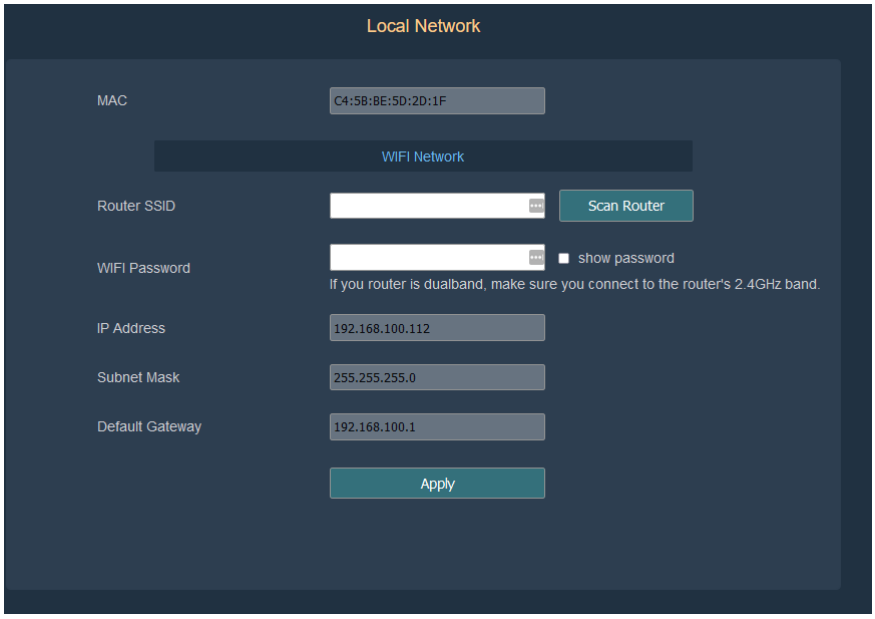

7.3 Linux Users

To find the WS-1965, connect to power and look for the following WIFI network.

 ©Copyright 2025, Ambient LLC. All Rights Reserved.

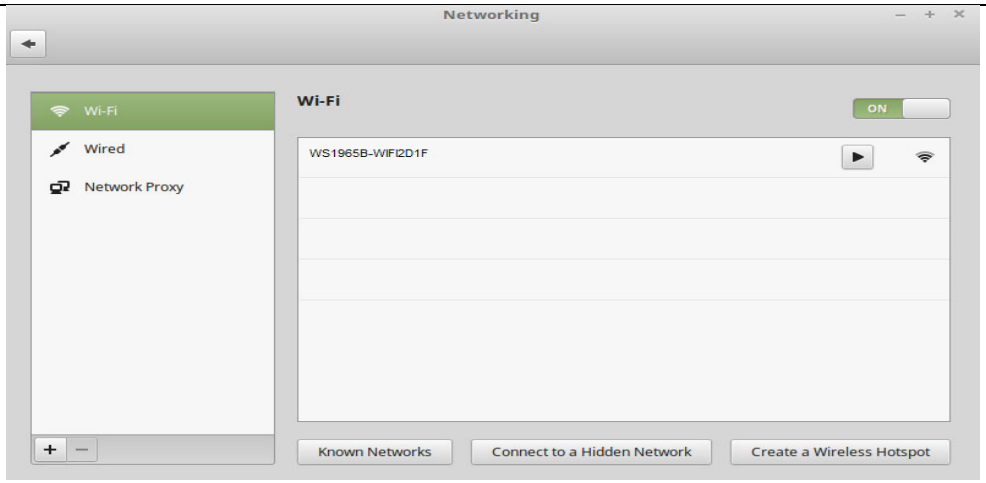

Connect to the network and then open a browser

Note: you may be told network has no internet.

Navigate to the following IP address 192.168.4.1 you will be presented with the following screen.

(Note: default password is blank)

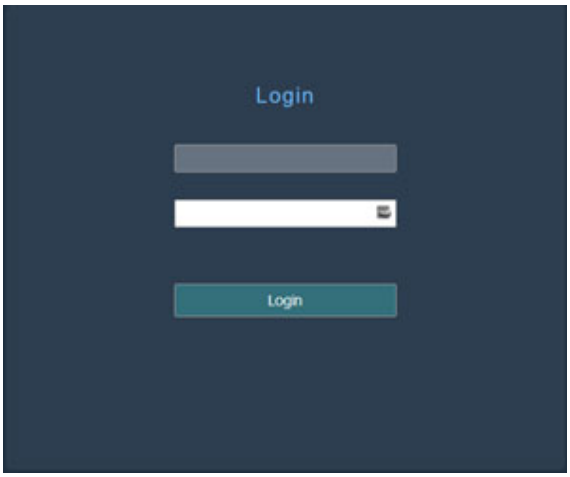

Once logged in you will want to navigate to the local network screen to connect to WIFI.

 ©Copyright 2025, Ambient LLC. All Rights Reserved.

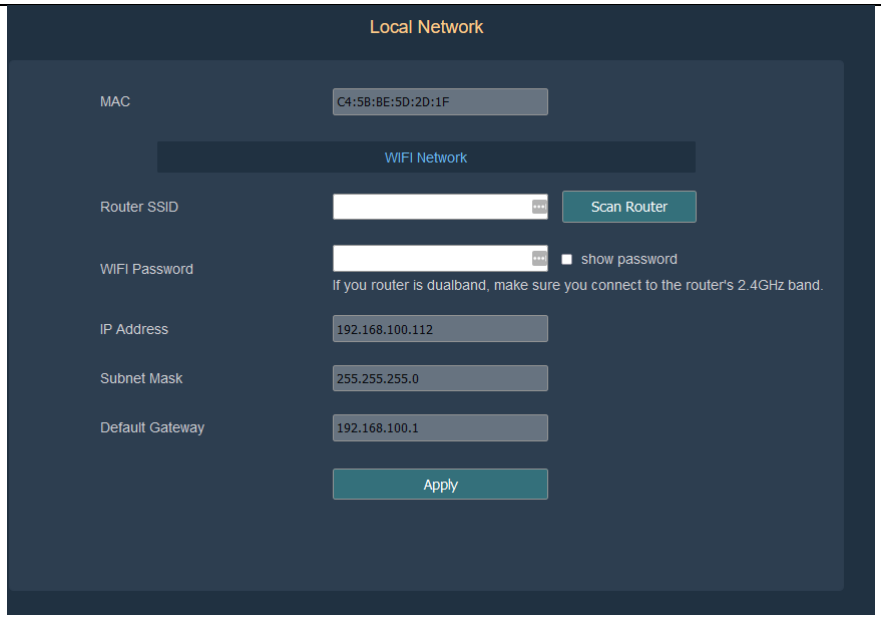

8. Updating console firmware

Access the console Device settings area from the Menu

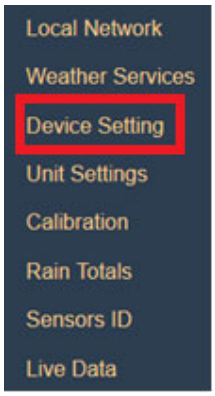

On this screen you can now select to manually check for a firmware upgrade or can allow the station to automatically upgrade the firmware when a new one is released

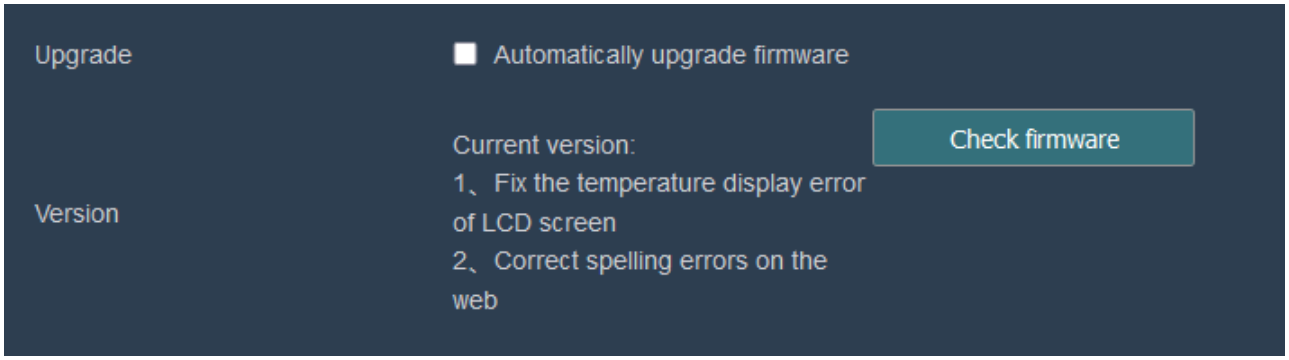

9. Registering with the Ambient Weather Network

Please note that you can send data to all cloud services at the same time.

 ©Copyright 2025, Ambient LLC. All Rights Reserved.

9.1 AmbientWeather.net

Registration for the Ambient Weather Network is accomplished through the web GUI

After access the web GUI you will click on the Weather Services tab.

On this screen you can enter you email address which is connected to your account on AmbientWeather.net. Now you can set the interval to upload data default is 1



Note that this is an example only and your MAC address will be different.

You will receive an email like the example below to complete the process.



Once registered, select the dashboard to view your data, as shown in Figure .

 ©Copyright 2025, Ambient LLC. All Rights Reserved.

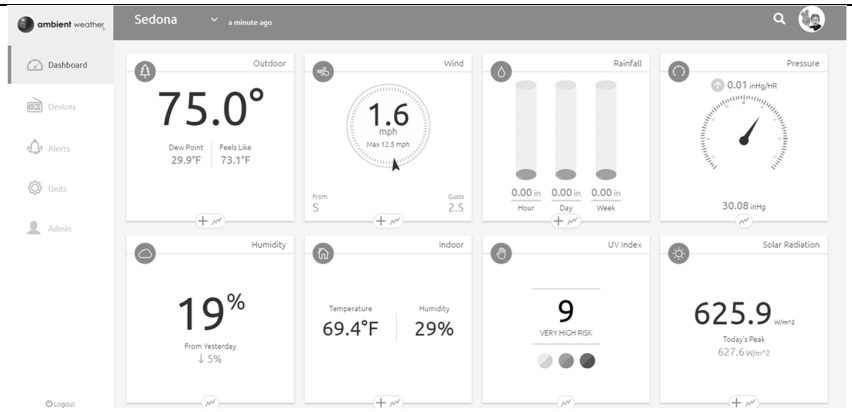

Figure 17

9.1.1 Ambient Weather Dashboard Apps

Android and iOS Ambient Weather Dashboard apps are available in addition to AmbientWeather.net. Search “Ambient Weather Dashboard” in the Google Play or iOS app store, or visit:

- Ambient Weather Dashboard for Android:
  https://play.google.com/store/apps/details?id=net.ambientweather.dashboard

- Ambient Weather Dashboard for iOS:
  https://apps.apple.com/us/app/ambient-weather-dashboard/id1426025887

SCAN ME

9.1.2 IFTTT

The Ambient Weather Network service connects to IFTTT, the platform that allows devices and services to work together seamlessly.

Here are a few things you can do with IFTTT:

- Turn off your Rachio sprinklers when it rains, there is too much wind, or below freezing.
- Close your Hunter blinds when the sun is too intense.
- Close your garage door when it is too windy.
- Blink your hue lights when it starts raining.
- Connect to other web services, such as Gmail, Facebook, Instagram, or Pinterest.

For more information on IFTTT and how it can work for you, visit:

https://ifttt.com/ambient_weather

 ©Copyright 2025, Ambient LLC. All Rights Reserved.

9.1.3 Amazon Alexa

The Ambient Weather skill allows you to get real-time, and past weather information generated by the devices they have set up on the Ambient Weather Network.

Enable the skill and get started: say "Alexa, ask Ambient Weather for a weather report.". This will provide you with your outdoor weather report, but you can ask for your indoor weather report as well by saying, "Alexa, ask Ambient Weather about the indoor conditions."

You can also ask for a report about a specific day, month, or year. Just say "Alexa, ask Ambient Weather about the weather yesterday." or "Alexa, ask Ambient Weather about the weather in May".

For more information on Amazon Alexa, visit:

https://www.amazon.com/dp/B074PGCM1D/

9.1.4 Works with Google Assistant

The Ambient Weather Google Assistant app provides Ambient Weather personal weather station owners with the ability to get real-time, and past weather information generated by the devices they have set up on the Ambient Weather Network

Link your account to get started: say 'hey google, Ambient Weather... weather report.' This will provide you with your outdoor weather report. You can ask for your indoor weather report as well by saying, ' indoor conditions'.

You can also link the Ambient Weather app by downloading the Google Assistant.

Here are some sample commands:

- Weather Report
- Outdoor conditions
- Indoor conditions
- Yesterday’s weather
- Conditions for October 15, 2019
- Conditions for September 2019
- Conditions for 2020

For more information and to enable this app, visit:

https://assistant.google.com/services/a/id/668e6f3369f27209/

10. Setting mode

Note: DST, Time Zone you will need to set time zone info properly if you have the console connected to internet and these setting need to be adjusted for your setup, otherwise console will be synchronized to default setting if you don’t setup these parameters on the APP properly.

Press and hold the **MODE** button for two seconds to enter the Set Mode. To proceed to the next setting, press (do not hold) the **MODE** button.

To exit the SET mode at any time, press the **LIGHT** button.

Error! Reference source not found. summarizes the set mode sequence and commands.

 ©Copyright 2025, Ambient LLC. All Rights Reserved.

Command	Mode	Settings	Image
[MODE] + 2 seconds	Enter Set Mode, Beep On or Off	Press [TEMP +] or [WIND -] to switch OFF and ON. This will prevent the beep from sounding when pressing any button.	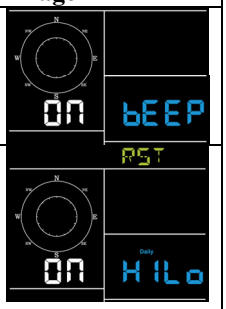
[MODE]	Clear Max/Min	Press [TEMP +] or [WIND -] to switch OFF and ON. When set to ON, the minimum and maximum values reset every day at midnight (00:00). When set to OFF, the minimum and maximum values must be reset manually.	
[MODE]	12 hour / 24 Hour Format	Press [TEMP +] or [WIND -] to switch hour format between 12 hour and 24-hour format.	
[MODE]	Hour	Press [TEMP +] or [WIND -] to adjust hour up or down.	
[MODE]	Minute	Press [TEMP +] or [WIND -] to adjust minute up or down.	
[MODE]	Year	Press [TEMP +] or [WIND -] to adjust year up or down	
[MODE]	Month	Press [TEMP +] or [WIND -] to adjust month up or down	
[MODE]	Day	Press [TEMP +] or [WIND -] to adjust day up or down	
[MODE]	Pressure Units of Measure	Press [TEMP +] or [WIND -] to change units of measure between hap, mmHg or inHg.	
[MODE]	Relative Pressure Calibration	Press [TEMP +] or [WIND -] to adjust relative pressure up or down Reference Section 10.10.1 for details on calibration of relative pressure.	
[MODE]	Temperature Units of Measure	Press [TEMP +] or [WIND -] to change temperature units of measure between °F and °C.	
[MODE]	Wind Units of Measure	Press [TEMP +] or [WIND -] to change wind units of measure between mph, kph (km/h).	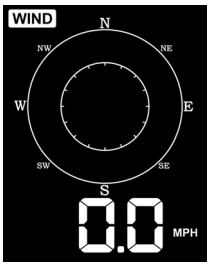
[MODE]	Rain Units of Measure	Press [TEMP +] or [WIND -] to change rain units of measure between in and mm.	
[MODE]	Exit Set Mode		

[MODE] + 2 seconds means press and hold the MODE button for two seconds.
[MODE] means press the MODE button.

Figure 17

10.1 Barometric Pressure Display

10.1.1 Viewing Absolute vs. Relative Pressure

Press and hold [RAIN/PRE] for two seconds switch between Rain and Pressure. While in Pressure mode Press

 ©Copyright 2025, Ambient LLC. All Rights Reserved.

[RAIN/PRE] to switch between absolute and relative pressure

Absolute pressure is the measured atmospheric pressure, and is a function of altitude, and to a lesser extent, changes in weather conditions.

Absolute pressure is not corrected to sea-level conditions.

Relative pressure is corrected to sea-level conditions. For further discussion of relative pressure and calibration, reference Section 10.1.2.

10.1.1 Rate of Change of Pressure Graph

The rate of change of pressure graphic is shown to the left of the barometric pressure and signifies the difference between the daily average pressure and the 30-day average (in inHg).

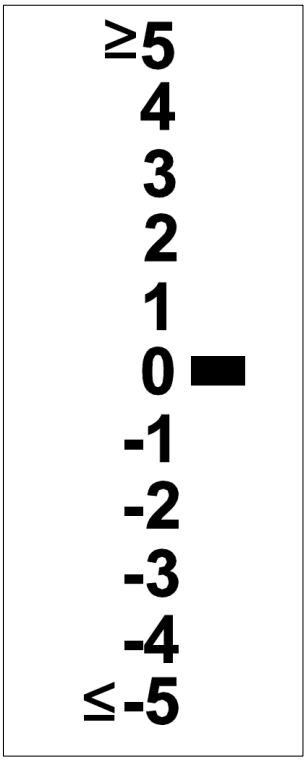

Figure 18

10.1.2 Relative Pressure Calibration Discussion

The calibration is completed within the web GUI. To compare pressure conditions from one location to another, meteorologists correct pressure to sea-level conditions. Because the air pressure decreases as you rise in altitude, the sea-level corrected pressure (the pressure your location would be at if located at sea-level) is generally higher than your measured pressure.

Thus, your absolute pressure may read 28.62 inHg (969 mb) at an altitude of 1000 feet (305 m), but the relative pressure is 30.00 inHg (1016 mb).

The standard sea-level pressure is 29.92 inHg (1013 mb). This is the average sea-level pressure around the world. Relative pressure measurements greater than 29.92 inHg (1013 mb) are considered high pressure and relative pressure measurements less than 29.92 inHg are considered low pressure.

To determine the relative pressure for your location, locate your local “official” barometric pressure reading on

 ©Copyright 2025, Ambient LLC. All Rights Reserved.

www.AmbientWeather.net/baro or scan QR code below. To access the pressure relative pressure calibration screen of web GUI, see Section 10.10.1 to enter the value.



Note: Calibration setting is saved until console is factory reset. If the console location elevation changes it will need to be recalibrated.

10.2 Rain Display

10.2.1 Rain Increments of Measure

Press and hold [RAIN/PRE] for two seconds switch between Rain and Pressure. While in Rain mode press the [RAIN/PRE] to switch between Rain Rate (in/hr.), Rain Event, Rain Hourly, Daily Rain, Weekly Rain, Monthly Rain and Yearly Rain.

10.2.2 Increments of Rain Definitions

- **Rain rate or hourly rain** is defined as the last 10 minutes of rainfall, multiplied by six (10 minutes x 6 = 1 hour). This is also referred to as instantaneous rain per hour.
- **Rain event** is defined as continuous rain**,** and resets to zero if rainfall accumulation is less than 1 mm (0.039 in) in a 24-hour period.
- **Daily Rain** is defined as the rainfall since midnight (00:00).
- **Weekly Rain** is defined as the calendar week total and resets on Sunday morning at midnight (Sunday thru Saturday).
- **Monthly Rain** is defined as the calendar month total and resets on the first day of the Month.
- **Total Rain** is defined as the running total since station was powered up.

10.3 Wind Display

Press the [WIND -] button to switch between average wind speed and, wind gust.
Press and hold the [WIND -] button for two seconds to switch the wind direction to display in degrees or in letters.

 ©Copyright 2025, Ambient LLC. All Rights Reserved.

- **Wind speed** is defined as the average wind speed in the 16 second update period.
- **Wind gust** is defined as the peak wind speed in the 16 second update period.

10.4 Temperature Display

If temperature is lower than minimum range, the temperature field will display dashes (--. -).
If temperature is higher than maximum range, the temperature field will display dashes (--. -).

10.4.1 Wind Chill, Dew Point, Heat Index Display and Multi-channel Scroll Mode

Press the [TEMP] button to switch between Outdoor Temperature, Wind Chill, Dew Point, Heat Index.

The WS-1965 supports up to 8 additional temperature humidity sensors (WH31E, WH31P, WH31PF). If you have the extra sensors, press the [TEMP +] button to switch between Outdoor Temperature, Wind Chill, Dew Point, Heat Index, 8 channel optional Indoor/Outdoor Thermo-hygrometer, Scroll Mode

10.5 Alarms

10.5.1 Viewing High and Low Alarms

To view the high alarm settings, press **MODE** button a third time, and the high alarms will be displayed, as shown in Figure 19 (a).

To view the low alarm settings, press the **MODE** button a fourth time, and the low alarms will be displayed, as shown in Figure 19 (b).

To return to normal mode, press the **LIGHT** button again.

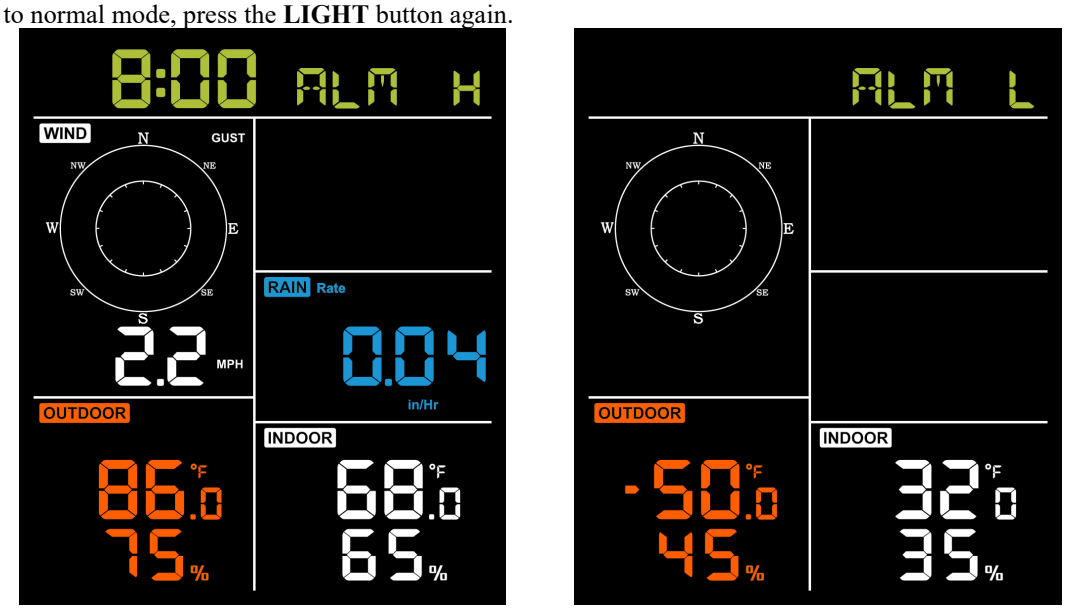

(a) **(b)**

Figure 19

 ©Copyright 2025, Ambient LLC. All Rights Reserved.

10.5.2 Setting High and Low Alarms

While the High Alarm is displayed (reference Section 9.8.1), press and hold the MODE button for 2 seconds to enter the High Alarm Set Mode.

While the Low Alarm is displayed (reference Section 9.8.1), press and hold the MODE button for 2 seconds to enter the Low Alarm Set Mode.

To save and proceed to the next alarm setting, press the Mode button.

To exit the High Alarm Set Mode at any time, press the LIGHT button.

Figure summarizes the alarm mode sequence and commands.

 ©Copyright 2025, Ambient LLC. All Rights Reserved.

Command	Mode	Settings
[MODE] + 2 seconds	Enter High Alarm Set Mode, Alarm Hour	Press [TEMP +] or [WIND -] to adjust alarm hour up or down. Press [RAIN/PRE] to turn the time alarm on or off. When the alarm is on, the alarm time icon will appear.
[MODE]	Alarm Minute	Press [TEMP +] or [WIND -] to adjust alarm minute up or down. Press [RAIN/PRE] to turn the time alarm on. The alarm time icon will appear. Press [RAIN/PRE] again to turn the time alarm off. The alarm time icon will disappear.
[MODE]	Alarm High Indoor Temperature	Press [TEMP +] or [WIND -] to adjust alarm value up or down. Press [RAIN/PRE] to turn the alarm on. The alarm icon HI will appear. Press [RAIN/PRE] to turn the alarm off. The alarm icon will disappear.
[MODE]	Alarm High Indoor Humidity	Press [TEMP +] or [WIND -] to adjust alarm value up or down. Press [RAIN/PRE] to turn the alarm on. The alarm icon HI will appear. Press [RAIN/PRE] to turn the alarm off. The alarm icon will disappear.
[MODE]	Alarm High Outdoor Temperature	Press [TEMP +] or [WIND -] to adjust alarm value up or down. Press [RAIN/PRE] to turn the alarm on. The alarm icon HI will appear. Press [RAIN/PRE] to turn the alarm off. The alarm icon will disappear.
[MODE]	Alarm High Outdoor Humidity	Press [TEMP +] or [WIND -] to adjust alarm value up or down. Press [RAIN/PRE] to turn the alarm on. The alarm icon HI will appear. Press [RAIN/PRE] to turn the alarm off. The alarm icon will disappear.
[MODE]	Alarm High Wind Gust	Press [TEMP +] or [WIND -] to adjust alarm value up or down. Press [RAIN/PRE] to turn the alarm on. The alarm icon HI will appear. Press [RAIN/PRE] to turn the alarm off. The alarm icon will disappear.
[MODE]	Alarm High Rain Rate	Press [TEMP +] or [WIND -] to adjust alarm value up or down. Press [RAIN/PRE] to turn the alarm on. The alarm icon HI will appear. Press [RAIN/PRE] to turn the alarm off. The alarm icon will disappear.
[MODE]	Alarm Low Indoor Temperature	Press [TEMP +] or [WIND -] to adjust alarm value up or down. Press [RAIN/PRE] to turn the alarm on. The alarm icon LO will appear. Press [RAIN/PRE] to turn the alarm off. The alarm icon will disappear.

 ©Copyright 2025, Ambient LLC. All Rights Reserved.

[MODE]	Alarm Low Indoor Humidity	Press [TEMP +] or [WIND -] to adjust alarm value up or down. Press [RAIN/PRE] to turn the alarm on. The alarm icon ⚠ LO will appear. Press [RAIN/PRE] to turn the alarm off. The alarm icon will disappear.
[MODE]	Alarm Low Outdoor Temperature	Press [TEMP +] or [WIND -] to adjust alarm value up or down. Press [RAIN/PRE] to turn the alarm on. The alarm icon ⚠ LO will appear. Press [RAIN/PRE] to turn the alarm off. The alarm icon will disappear.
[MODE]	Alarm Low Outdoor Humidity	Press [TEMP +] or [WIND -] to adjust alarm value up or down. Press [RAIN/PRE] to turn the alarm on. The alarm icon ⚠ LO will appear. Press [RAIN/PRE] to turn the alarm off. The alarm icon will disappear.
[MODE]	Exit alarm settings mode.	

[MODE] + 2 seconds means press and hold the ALARM button for two seconds.
[MODE] means press the MODE button.

Figure 20

10.6 Backlight Operation

10.6.1 With AC Adapter

The backlight requires AC power to stay on continuously when the included AC adapter is used. When AC power is disconnected, the backlight can be temporarily turned on when any button is pressed.

Press the **LIGHT** button to adjust the brightness between High, Low and Off.

10.6.2 Without AC Adapter

To temporarily turn on the back light for 15 seconds, press the **LIGHT** button.

10.6.3 Tendency Arrows

Tendency arrows allow you to quickly determine of temperature or pressure are rising and falling in a three-hour update period, updated every 30 minutes. Figure defines the conditions for rising and falling pressure every 3 hours.

Tendency indicators	Condition	Humidity Change per 3 Hours	Temperature Change per 3 Hours
^	Rising	Rising > 3%	Rising > 1º C / 2 ºF
>	Steady	Change ≤ ±3%	Change ≤ ± 1 º C / 2 º F
v	Falling	Falling > 3%	Falling > 1º C / 2 ºF

Figure 21

 ©Copyright 2025, Ambient LLC. All Rights Reserved.

10.6.4 Wireless Signal Quality Indicator

The wireless signal strength displays reception quality. If no signal is lost, the signal strength indicator will display 5 bars. If the signal is lost once, four bars will be displayed, as shown in Figure .

Five Bars	Four Bars
	
No signal loss	Lost signal once

Figure 22

10.7 Weather Forecasting

The five weather icons are Sunny, Partly Cloudy, Cloudy, Rainy, Stormy and Snowy.

The forecast icon is based on the rate of change of barometric pressure. Please allow at least **one month** for the weather station to learn the barometric pressure over time.

Sunny	Partly Cloudy	Cloudy	Rainy	Snowy
				
Pressure increases for a sustained period	Pressure increases slightly, or initial power up	Pressure decreases slightly	Pressure decreases for a sustained period	Pressure decreases for a sustained period and temperature is below freezing

Figure 23

10.7.1 Storm Alert

If there is a rapid drop in barometric pressure, the forecast icon will flash.

10.7.2 Weather Forecasting Description and Limitations

In general, if the rate of change of pressure increases, the weather is generally improving (sunny to partly cloudy). If the rate of change of pressure decreases, the weather is generally degrading (cloudy, rainy). If the rate of change is relatively steady, it will read partly cloudy.

The reason the current conditions do not match the forecast icon is because the forecast is a prediction 24-48 hours in advance. In most locations, this prediction is only 70% accurate and it is a good idea to consult the National Weather Service for more accurate weather forecasts. In some locations, this prediction may be less or more accurate. However, it is still an interesting educational tool for learning why the weather changes.

The National Weather Service (and other weather services such as Accuweather and The Weather Channel) have many tools at their disposal to predict weather conditions, including weather radar, weather models, and detailed mapping of ground conditions.

 ©Copyright 2025, Ambient LLC. All Rights Reserved.

10.8 Max/Min Mode

10.8.1 Viewing Max/Min Values

To view the max value, press the **MODE** button, and the max values will be displayed, as shown in Figure (a). To clear the max values, press and hold the MODE button while the max values are displayed.

To view the low alarm settings, press the **MODE** button again, and the min values will be displayed, as shown in Figure 24 (b). To clear the min values, press and hold the MODE button while the min values are displayed.

To return to normal mode, press the **LIGHT** button.

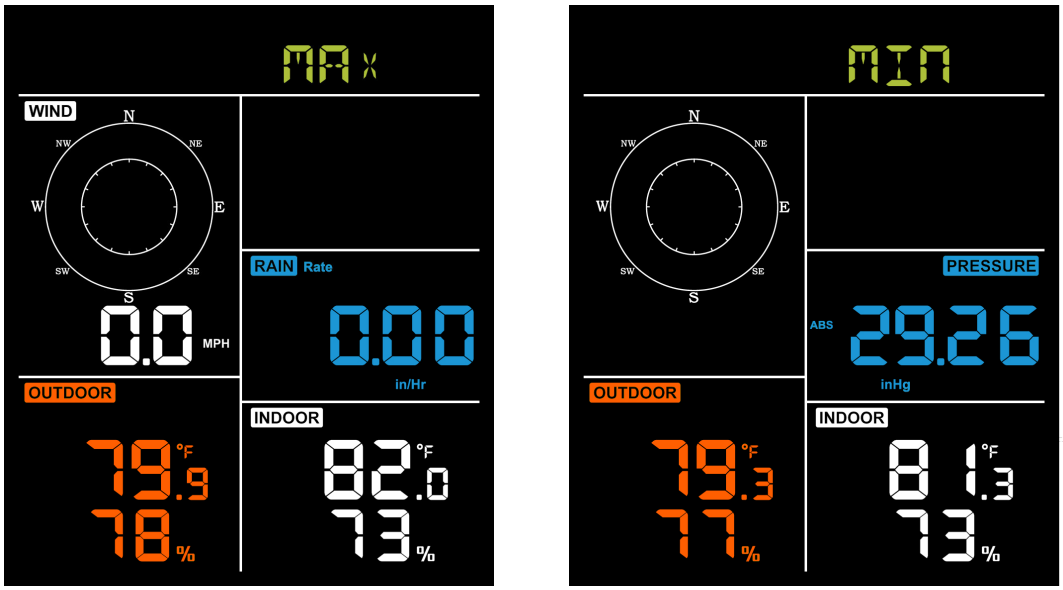

(a) (b)

Figure 24

10.8.2 Display Wind Chill, Heat Index vs. Dew Point Max/Min Values

While the **max values** are displayed as outlined in Section 9.8.1, press the **TEMP+** button once to view the wind chill, twice to view the dew point, third to view the heat index and a fourth time to return to outdoor temperature.

While the **min values** are displayed as outlined in Section 9.8.1, press the **TEMP+** button once to view the wind chill, twice to view the dew point, third to view the heat index and a fourth time to return to outdoor temperature.

10.8.3 Display Wind Speed vs. Wind Gust Max Values

While the **max values** are displayed as outlined in Section 9.8.1, press the **WIND-** button once to view the max wind gust, and twice to return to wind speed.

10.8.4 Display Hourly Rain, Rain Rate

While the **max values** are displayed as outlined in Section 9.8.1. press the **RAIN** button once to view the max hourly rain, twice to view the rain rate.

 ©Copyright 2025, Ambient LLC. All Rights Reserved.

10.8.5 Display Absolute and Relative Pressure Min and Max Values

While the **max values** are displayed as outlined in Section 9.8.1, press, and hold the **RAIN/PRE** button for two seconds to enter pressure display, press **RAIN/PRE** button to switch between Relative pressure and Absolute pressure

While the **min values** are displayed as outlined in Section 9.8.1, press, and hold the **RAIN/PRE** button for two seconds to enter pressure display, press **RAIN/PRE** button to switch between Relative pressure and Absolute pressure

While the **min values** are displayed as outlined in Section 10.8, press and hold the **PRESSURE** button for two seconds to view the absolute pressure, and press and hold the **PRESSURE** button for two seconds again to return to relative pressure.
To return to normal mode, press the **LIGHT** button.

10.9 Resynchronize Wireless Sensor

While in outdoor TH/wind chill/dew point/heat index display mode press **TEMP+** button for 5 seconds, and the console will re-register the outdoor sensor array

While in 1-8 channel Thermo-hygro sensor display mode press **TEMP+** button for 5 seconds, and the console will re-register the current channel outdoor sensor.

While in Scrolling Mode press **TEMP+** button for 5 seconds, and the console will re-register the sensor array and 1-8 channel sensors.

10.10 Calibration

Select the Calibration tab to view your calibration data from the weather station.

Calibration of most parameters is not required, except for Relative Pressure, which must be calibrated to sea-level to account for altitude effects. For more information on sea-level pressure calibration, please reference note (3) below.

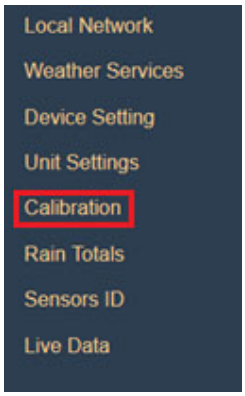

On the Calibration screen you can make any need adjustments

 ©Copyright 2025, Ambient LLC. All Rights Reserved.



Parameter	Type of Calibration	Default	Typical Calibration Source
Temperature	Offset	Current Value	Red Spirit or Mercury Thermometer (1)
Humidity	Offset	Current Value	Sling Psychrometer (2)
ABS Barometer	Offset	Current Value	Calibrated laboratory grade barometer
REL Barometer	Offset	Current Value	Local airport (3)
Wind Direction	Offset	Current Value	GPS, Compass (4)
Solar Radiation	Gain	1.00	Calibrated laboratory grade solar radiation sensor
UV	Gain	126.7 lux	Solar radiation conversion from lux to w/m^2 for wavelength correction (5)
Wind	Gain	1.00	Calibrated laboratory grade wind meter (6)
Rain	Gain	1.00	Sight glass rain gauge with an aperture of at least 4” (7)

(1) Temperature errors can occur when a sensor is placed too close to a heat source (such as a building structure, the ground, or trees).

To calibrate temperature, we recommend a mercury or red spirit (fluid) thermometer. Bi-metal (dial) and digital thermometers (from other weather stations) are not a good source and have their own margin of error. Using a local weather station in your area is also a poor source due to changes in location, timing (airport weather stations are only updated once per hour) and possible calibration errors (many official weather stations are not

 ©Copyright 2025, Ambient LLC. All Rights Reserved.

properly installed and calibrated).

Place the sensor in a shaded, controlled environment next to the fluid thermometer, and allow the sensor to stabilize for 48 hours. Compare this temperature to the fluid thermometer and adjust the Temperature Offset in the Calibration Screen of the web interface to match the fluid thermometer.

(2) Humidity is a difficult parameter to measure electronically and drifts over time due to contamination. In addition, location has an adverse effect on humidity readings (installation over dirt vs. lawn for example).

Official stations recalibrate or replace humidity sensors on a yearly basis. Due to manufacturing tolerances, the humidity is accurate to ± 5%. To improve this accuracy, the indoor and outdoor humidity can be calibrated using an accurate source, such as a sling psychrometer.

(3) The WS-1965 displays two different pressures: absolute (measured) and relative (corrected too sea-level).

To compare pressure conditions from one location to another, meteorologists correct pressure to sea-level conditions. Because the air pressure decreases as you rise in altitude, the sea-level corrected pressure (the pressure your location would be at if located at sea-level) is generally higher than your measured pressure.

Thus, your absolute pressure may read 28.62 inHg (969 mb) at an altitude of 1000 feet (305 m), but the relative pressure is 30.00 inHg (1016 mb).

The standard sea-level pressure is 29.92 in Hg (1013 mb). This is the average sea-level pressure around the world. Relative pressure measurements greater than 29.92 inHg (1013 mb) are considered high pressure and relative pressure measurements less than 29.92 inHg are considered low pressure.

To determine the relative pressure for your location, locate your local “official” barometric pressure reading on www.AmbientwWeather.net/baro or scan QR code below. To access the pressure relative pressure calibration screen of your console, see Section 10.10.1 below to enter the value.



Note: Calibration setting is saved until console is factory reset. If the console location elevation changes it will need to be recalibrated.

(4) Only use this if you improperly installed the weather station sensor array and did not point the direction reference to true north.

(5) The default conversion factor based on the wavelength for bright sunlight is 126.7 lux / w/$m^{2.}$ This variable can be adjusted by photovoltaic experts based on the light wavelength of interest, but for most weather station owners, is accurate for typical applications, such as calculating evapotranspiration and solar panel efficiency.

 ©Copyright 2025, Ambient LLC. All Rights Reserved.

(6) Wind speed is the most sensitive to installation constraints. The rule of thumb for properly installing a wind speed sensor is 4 x the distance of the tallest obstruction. For example, if your house is 20' tall and you mount the sensor on a 5' pole:

Distance = 4 x (20 – 5)' = 60'.

Many installations are not perfect and installing the weather station on a roof can be difficult. Thus, you can calibrate for this error with a wind speed multiplier.

In addition to the installation challenges, wind cup bearings (moving parts) wear over time.

Without a calibrated source, wind speed can be difficult to measure. We recommend using a calibrated wind meter (available from Ambient Weather) and a constant speed, high speed fan.

(7) The rain collector is calibrated at the factory based on the funnel diameter. The bucket tips every 0.01" of rain (referred to as resolution). The accumulated rainfall can be compared to a sight glass rain gauge with an aperture of at least 4". The following is a link to an accurate sight glass rain gauge:

http://www.ambientweather.com/stprraga.html

Make sure you periodically clean the rain gauge funnel.

Note: The purpose of calibration is to fine tune or correct for any sensor error associated with the devices margin of error. Errors can occur due to electronic variation (example, the temperature sensor is a resistive thermal device or RTD, the humidity sensor is a capacitance device), mechanical variation, or degradation (wearing of moving parts, contamination of sensors).

Calibration is only useful if you have a known calibrated source, you can compare it against, and is optional. This section discusses practices, procedures, and sources for sensor calibration to reduce manufacturing and degradation errors. Do not compare your readings obtained from sources such as the internet, radio, television, or newspapers. The purpose of your weather station is to measure conditions of your surroundings, which vary significantly from location to location.

Select the **Save** button to confirm changes.

10.10.1 Relative Barometric Pressure Calibration Example

Follow the next steps to calibrate the relative pressure in your weather station.

Sample Equation for Relative Pressure Offset:
Official relative pressure, Step 1 (minus) Personal Weather Station relative pressure, Step 2 = **Relative Pressure Offset**

Step 1: Gather your local relative pressure from an official weather station here: www.AmbientWeather.net/baro (or scan the QR code above on pg. 3)
In the below Sample Equation, the local official station reading is 30.12 inHg.
Step 2: From your weather station display or the Live Data panel in the web GUI, note the absolute pressure (measured, and not corrected too sea-level). In the below Sample Equation, the weather station reads 28.90 inHg.
Step 3: Enter the difference (calculated offset) in the Calibration panel for Relative Pressure Offset:

Sample Equation: Relative Pressure Offset = 30.12 – 28.90 = **1.22**



 ©Copyright 2025, Ambient LLC. All Rights Reserved.

10.10.2 PM25 Air Quality Sensor Calibration

The calibrated PM2.5 equations are as follows:

Calibrated PM2.5 = Measured PM2.5 + PM2.5 Offset



10.10.3 AQIN Calibration

The calibration equations are as follows:

Calibrated C02 = Measured C02 + C02 Offset

Calibrated PM2.5 = Measured PM2.5 + PM2.5 Offset

Calibrated PM10 = Measured PM10 + PM10 Offset

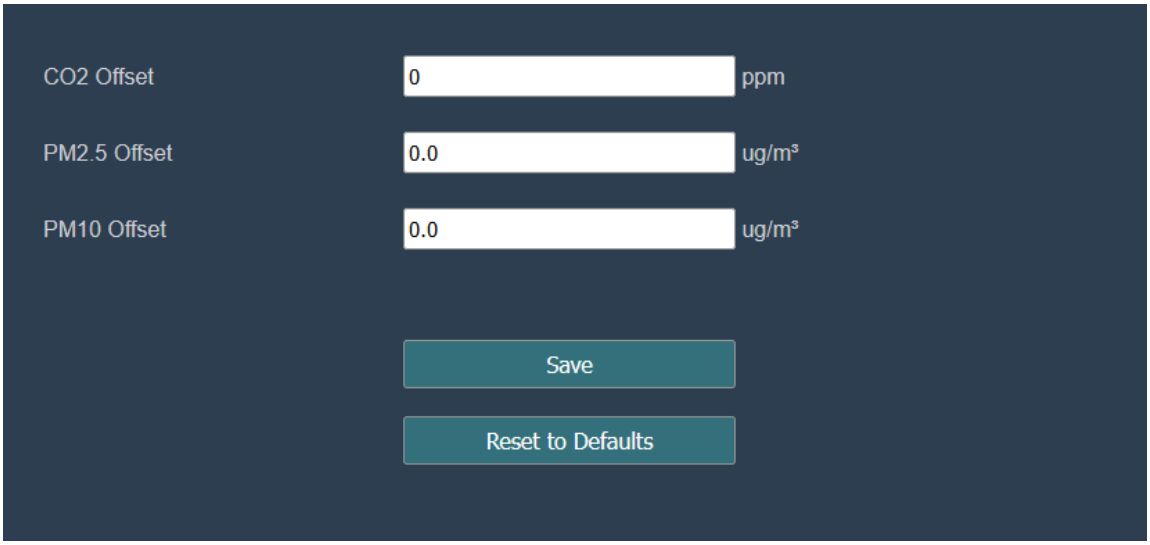

 ©Copyright 2025, Ambient LLC. All Rights Reserved.

10.10.4 Soil Moisture Calibration

The soil moisture sensor provides for optional two-point linear calibration. This is important due to different soil types and density.

The calibration equation is defined as:

% Soil Moisture (calibrated) = (Now AD – 0%AD) *100 / (100%AD – 0%AD)

Where AD stands for “analog to digital” and is the unscaled digital value, Now AD is the currently measured AD and the other parameters are described below.

10.10.4.1 0% Soil Moisture Set Point

To determine the 0% soil moisture, collect a soil sample in a cup from where the sensor will be installed, and allow the soil to completely dry out. Next, place the soil sensor in the medium and allow the sensor to stabilize for one hour.

Next, set the **0%AD** calibration set point to the **Now AD** value.

10.10.4.2 100% Soil Moisture Set Point

To determine the 100% soil moisture, collect a soil sample in a cup from where the sensor will be installed, and add water and mix until the soil is saturated, and there is no standing water. Next, place the soil sensor in the medium and allow the sensor to stabilize for one hour.

Next, set the **100%AD** calibration set point to the **Now AD** value.

10.10.4.3 Customize and Reset

Once the 0%AD and 100%AD are entered, set **Customize** to **ON**. To return to the non-calibrated settings, set **Customize** to OFF. Select **Reset** to restore to factory default.

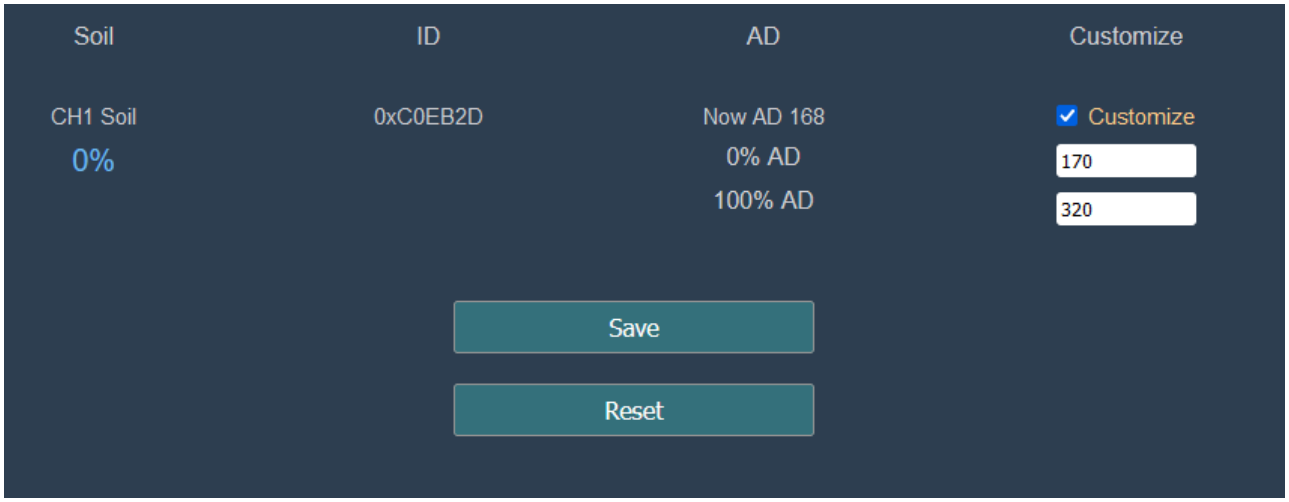

 ©Copyright 2025, Ambient LLC. All Rights Reserved.

10.10.5 Multi-Channel Temperature and Humidity Calibration

The calibrated temperature and humidity equations are as follows:

Calibrated Temperature = Measured Temperature + Temp. Offset
Calibrated Humidity = Measured Humidity + Humidity Offset



10.11 Install Mounting Pole

10.11.1 Before you mount

Before proceeding with the outdoor mounting detailed in this section, you may want to skip to setup instructions in section 5.4 and onwards first, while you keep the assembled outdoor sensor package nearby (although preferably not closer than 5 ft. from the console). This will make any troubleshooting and adjustments easier and avoids any distance or interference related issues from the setup.
After setup is complete and everything is working, return here for outdoor mounting. If issues show up after outdoor mounting they are almost certainly related to distance, obstacles etc.

 ©Copyright 2025, Ambient LLC. All Rights Reserved.

10.11.2 Site Survey

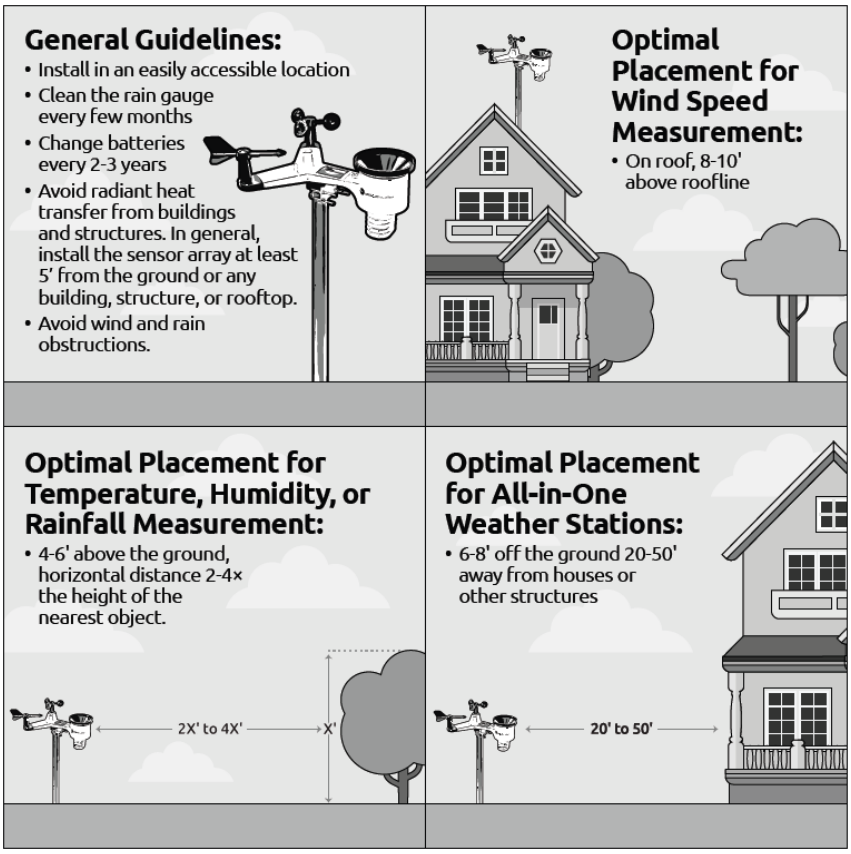

Perform a site survey before installing the weather station. Consider the following:

1. You must clean the rain gauge every few months and change the batteries every year. Provide easy access to the weather station.
2. Avoid radiant heat transfer from buildings and structures. In general, install the sensor array at least 5’ from any building, structure, ground, or roof top.
3. Avoid wind and rain obstructions. The rule of thumb is to install the sensor array at least four times the difference in the height of the sensor array and that of the tallest obstruction. For example, if the building is 20’ tall and the mounting pole is 6’ tall, install the sensor array 4 x (20 – 6)’ = 56’ away.
4. Mount the sensor array in direct sunlight for accurate temperature readings.
5. Installing the weather station over sprinkler systems or other unnatural vegetation may affect temperature and humidity readings. We suggest mounting the sensor array over natural vegetation.
6. Wireless Range. Radio communication between receiver and transmitter in an open field can reach up to 330 feet, providing there are no interfering obstacles such as buildings, trees, vehicles, and high voltage lines. Wireless signals will not penetrate metal buildings. Under most conditions, the maximum wireless range is 100’.
7. Radio Interference. Computers, radios, televisions, and other sources can interfere with radio communications between the sensor array and console. Please take this into consideration when choosing console or mounting locations. Make sure your display console is at least five feet away from any electronic device to avoid interference.
8. Visit Ambient Weather Mounting Solutions for assistance and ideas for mounting your weather station:

https://ambientweather.com/weather-station-mounting

10.11.3 Mounting

You can attach a pipe to a permanent structure and then attach the sensor package to it (see Figure 25-26). The U-Bolts will accommodate a pipe diameter of 1.25-2 inches (pipe not included).

 ©Copyright 2025, Ambient LLC. All Rights Reserved.

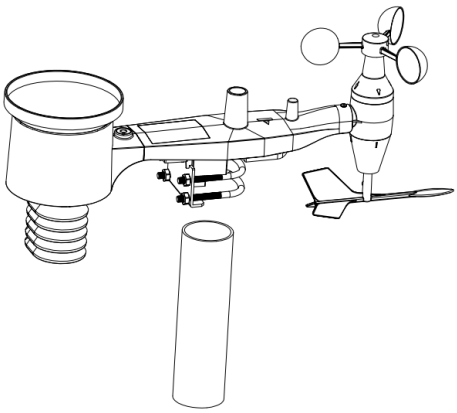

Figure 25

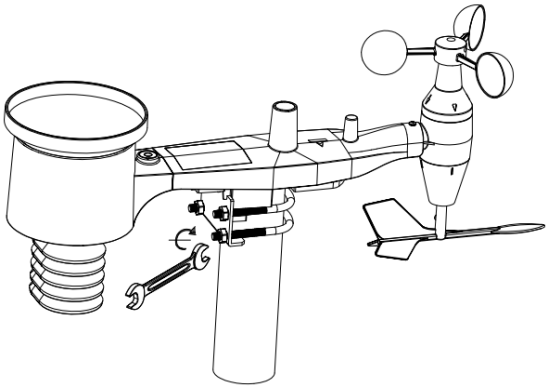

Figure 26

Finally, place the sensor package on top of the prepared mount pipe. The U-bolts should be loose enough to allow this but loosen the nuts as necessary. Once placed, hand tighten all four nuts, taking care to do so evenly.

Now you will need to align the whole package in the proper direction byrotating it on top of the mounting pipe as needed . Locate the arrow labeled “WEST” that you will find on top of the sensor package right next
to the light sensor. You must rotate the whole sensor package until
this arrow points due West. To achieve proper alignment, it is helpful to usea compass (many cell phones have a compass application).

Once rotated in the correct orientation, lightly tighten the bolts a little more (use a wrench) to prevent further rotation.

Note: Use the bubble level next to the rain sensor to make sure sensor array is completely level. If the sensor is not level the rain gauge will not measure properly.

11 Live Internet Publishing

Your console can send your sensor data to select internet-based weather services. The supported services are shown in the table below:

Hosting Service	Website	Description
Ambient Weather Network	AmbientWeather.net	The Ambient Weather Network is the most user-friendly design for monitoring your data across different platforms. Quickly view detailed information with our animated expandable modules. Supports email and text alerts. services don’t support.
Customized Website		Supports uploading to your customized website, if the website has the same protocol with Wunderground or Ambient

Figure 27

12 Optional sensors

The item supports the following optional sensors, and the console receives and sends this data directly to the Ambient

 ©Copyright 2025, Ambient LLC. All Rights Reserved.

Weather Network or Wunderground.com. The data is not displayed on the console (pass through only) and sensor management and calibration can only be accomplished via the web GUI

Item Number	Number of Channels	Description	Image	Scan QR Code to Purchase
AQIN	1	PM2.5, PM10 and CO_2 Wireless Indoor Particulate Monitor		SCAN ME
PM25	1	PM2.5 Wireless Outdoor Particulate Monitor		SCAN ME
PM25IN	1	PM2.5 Wireless Indoor Particulate Monitor		SCAN ME
WH31E*	8	Indoor/Outdoor Thermo-Hygrometer		SCAN ME
WH31L	1	Lightning Detector		SCAN ME
WH31LA	4	Leak Detector		SCAN ME
WH31P*	8	Probed Thermometer		SCAN ME

 ©Copyright 2025, Ambient LLC. All Rights Reserved.

WH31SM	16	Soil Moisture Sensor		SCAN ME
WH31PF*	8	Floating Pool Thermometer		SCAN ME

(*) The WH31E, WH31P and WH31PF share the same 8-channels.

Note: The Ambient Weather PM25IN and AQIN utilize the same channel on the WS-1965 console. Users can only utilize one sensor PM25IN or AQIN at a time. If you already have a PM25IN and are adding a AQIN to your console, please see Section # 4.1 of the AQIN manual to sync your new AQIN sensor.

https://ambientweather.com/mwdownloads/download/link/id/1097/

12.1 Connecting optional sensors to WS-1965 via the web GUI.

The WS-1965 module supports up to 8 additional thermos-hygrometer sensors (Model WH31E, WH31P, WH31PF). Place the sensors in and around your home and monitor on the Ambient Weather Network.

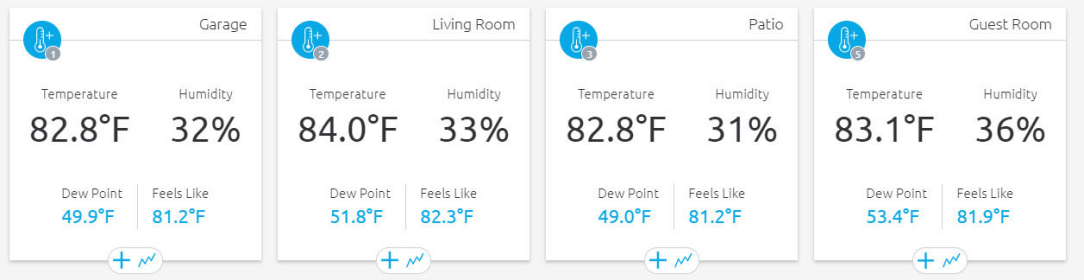

Figure 28

Registering an additional sensor.

 ©Copyright 2025, Ambient LLC. All Rights Reserved.

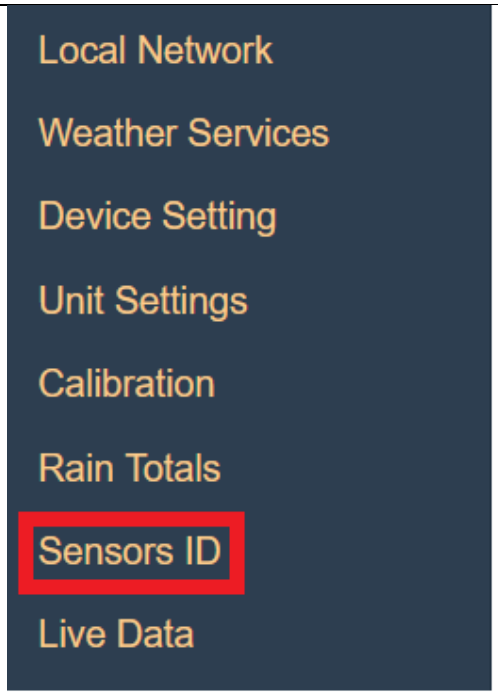

Login to the WS-1965 web GUI and access Sensors ID tab.



On the Sensors ID screen, you can register or re-register an additional sensor by clicking the Re-register button.

12.2 Indoor/Outdoor Thermo-Hygrometer, 8 Channel (optional)

This item supports up to 8 additional thermo-hygrometer sensors (WH31), the data display on the console and sends the data to the Ambient Weather Network.

Note: WH31P sensor body is not waterproof the probe is please when installing sensor body under a protected are such as an eave.

Note: Do not use rechargeable batteries. We recommend fresh alkaline batteries for outdoor temperature ranges between -4 °F and 140 °F and fresh lithium batteries for outdoor temperature ranges between -40 °C and 60 °C.

 ©Copyright 2025, Ambient LLC. All Rights Reserved.

1 Remove the battery door on the back of the transmitter(s) by sliding down the battery door, as shown in Figure 29

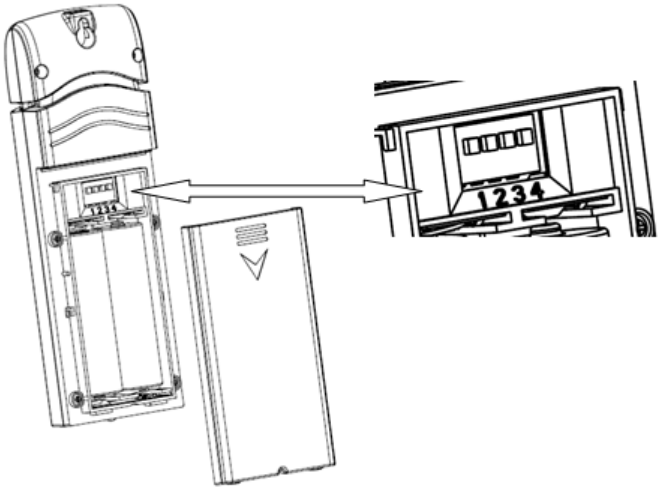

Figure 29

2 **BEFORE** inserting the batteries, locate the dip switches on the inside cover of the lid of the transmitter.
3 **Channel Number:** This item supports up to eight transmitters. To set each channel number (the default is Channel 1), change Dip Switches 1, 2 and 3, as referenced in Figure 29.
4 **Temperature Units of Measure:** To change the transmitter display units of measure (°F vs. °C), change Dip Switch 4, as referenced in Figure .

Switch in down position. Switch in up position.

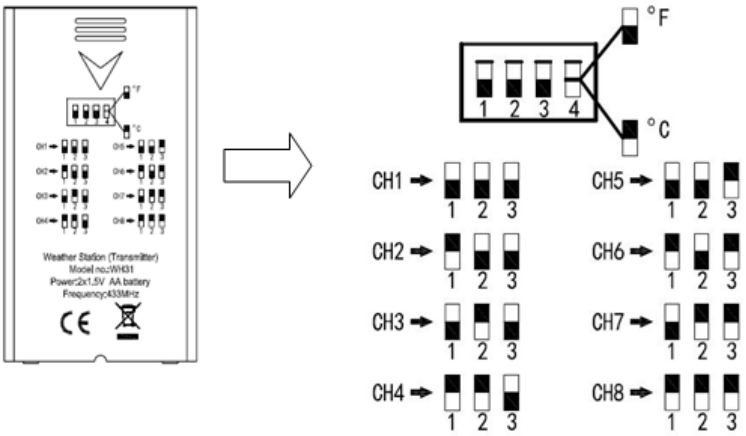

Figure 30

5 Insert two AA batteries.
6 Verify the correct channel number (CH) and temperature units of measure (°F vs. °C) are on the display, as shown in Figure .

 ©Copyright 2025, Ambient LLC. All Rights Reserved.

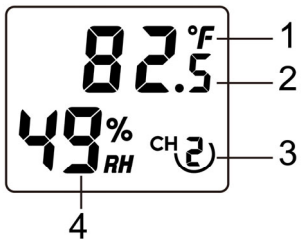

Figure 31

(1) temperature
(2) temperature units (°C vs. F)
(3) channel number
(4) relative humidity

7 Close the battery door.
8 Repeat for the additional remote transmitters, verifying each remote is on a different channel.

12.Best Practices for Wireless Communication

Note: To ensure proper communication, mount the remote sensor(s) upright on a vertical surface, such as a wall. **Do not lay the sensor flat.**

Wireless communication is susceptible to interference, distance, walls, and metal barriers. We recommend the following best practices for trouble free wireless communication.
Electro-Magnetic Interference (EMI). Keep the console several feet away from computer monitors and TVs.
Radio Frequency Interference (RFI). If you have other 433 MHz devices and communication is intermittent, try turning off these other devices for troubleshooting purposes. You may need to relocate the transmitters or receivers to avoid intermittent communication.

1. **Line of Sight Rating.** This device is rated at 300 feet line of sight (no interference, barriers, or walls) but typically you will get 100 feet maximum under most real-world installations, which include passing through barriers or walls.
2. **Metal Barriers.** Radio frequency will not pass-through metal barriers such as aluminum siding. If you have metal siding, align the remote and console through a window to get a clear line of sight.
   The following is a table of reception loss vs. the transmission medium. Each “wall” or obstruction decreases the transmission range by the factor shown below.

Medium	RF Signal Strength Reduction
Glass (untreated)	5-15%
Plastics	10-15%
Wood	10-40%
Brick	10-40%
Concrete	40-80%
Metal	90-100%

13 Specifications

13.1 Wireless Specifications

- Line of sight wireless sensor array RF transmission (in open air): 300 feet, 100 feet under most conditions
- Update Rate: Outdoor Sensor: 16 seconds, Indoor Sensor: 60 seconds
- Sensor Array RF Frequency: 915 MHz

 ©Copyright 2025, Ambient LLC. All Rights Reserved.

13.2 Measurement Specifications

The following table provides the specifications for the measured parameters.

Measurement	Range	Accuracy	Resolution
Indoor Temperature	32˚F to + 122 °F	± 2 °F	0.1 °F
Outdoor Temperature	-40 to 149 °F (lithium batteries) -23 to 140 °F (alkaline batteries)	± 1 °F	0.1 °F
Indoor Humidity	10 to 99%	± 5%	1 %
Outdoor Humidity	10 to 99%	± 5%	1 %
Barometric Pressure	8.85 to 32.50 inHg	± 0.08 inHg (within range of 27.13 to 32.50 inHg)	0.01 inHg
Rain	0 to 236 in.	± 10%	0.01 in
Wind Direction	0 - 360 º	± 10º	1º
Wind Speed	0 to 100 mph (operational)	± 2.2 mph or 10% (whichever is greater)	1.4 mph

13.3 Power Consumption

- Wireless Display: 2 x AA batteries (not included), we suggest Energizer Lithium batteries
  - Expected battery life without optional AC adapter using Wi-Fi upload to AW.net is 5-6 months (the limiting factor will be the amount of use of the backlight)
  - Expected battery life using the optional AC adapter is 12-18 months

- Sensor Array: 2 x AA batteries (not included), we suggest Energizer Lithium batteries
  - Expected battery life: Energizer Lithium up to 2 years, Alkaline batteries at least 12 months, most rechargeable batteries expect 12 months or less

14. Maintenance

1. Clean the rain gauge once every 3 months. Rotate the funnel counterclockwise and lift to expose the rain gauge mechanism, and clean with a damp cloth. Remove any dirt, debris, and insects. If bug infestation is an issue, spray the array lightly with insecticide.

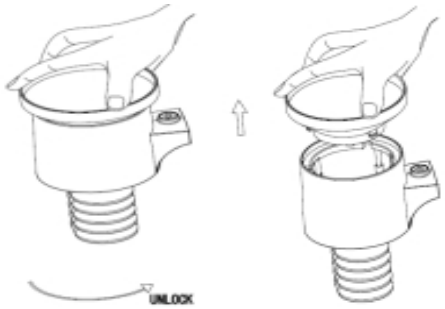

2. When replacing the batteries, apply a corrosion preventive compound on the battery terminals, available at Amazon and most hardware stores.
3. In snowy environments, spray the top of the weather station with anti-icing silicon spray to prevent snow build up.

 ©Copyright 2025, Ambient LLC. All Rights Reserved.

15. Troubleshooting Guide

Problem	Solution
Outdoor sensor array does not communicate to the display console.	The sensor array may have initiated improperly, and the data is registered by the console as invalid, and the array must be reset. Press the reset button as described in Section 5.3. With an open-ended paperclip, press the reset button for 3 seconds to resync the sensor array with the console about 10 feet away. The LED next to the battery compartment will flash every 16 seconds. If the LED is not flashing every 16 seconds… Replace the batteries in the outside sensor array. If the batteries were recently replaced, check the polarity. If the sensor is flashing every 16 seconds, proceed to the next step. There may be a temporary loss of communication due to reception loss related to interference or other location factors, or the batteries may have been changed in the sensor array and the console has not been reset. The solution may be as simple as powering down and up the console (remove AC power and batteries, wait 10 seconds, and reinsert AC power and batteries).
Temperature sensor reads too high in the daytime.	Make certain that the sensor array is not too close to heat generating sources or strictures, such as buildings, pavement, walls, or air conditioning units. Use the calibration feature to offset installation issues related to radiant heat sources. Reference Section 9.
Relative pressure does not agree with official reporting station	You may be viewing the absolute pressure, not the relative pressure. Select the relative pressure. Make sure you properly calibrate the sensor to an official local weather station. Reference Section 9.8.1 for details.
Rain gauge reports rain when it is not raining	An unstable mounting solution (sway in the mounting pole) may result in the tipping bucket incorrectly incrementing rainfall. Make sure you have a stable, level mounting solution.
No Wi-Fi connection	1. Check for Wi-Fi symbol on the display. If wireless connectivity is successful, the Wi-Fi icon  will be displayed in the time field. 2. Make sure your modem Wi-Fi settings are correct (network name, and password). 3. The console only supports and connects to 2.4 GHz routers. If you own a 5 GHz router, and it is a dual band router, you will need to disable the 5 GHz band, and enable the 2.4 GHz band. 4. The console does not support guest networks.

 ©Copyright 2025, Ambient LLC. All Rights Reserved.

16 Accessories

The following software and hardware accessories are available for this weather station at www.AmbientWeather.com .

Accessory	Description
Ambient Weather Mounting Solutions Weather Station Mounting Hardware	Ambient Weather provides the most comprehensive mounting solutions for weather stations, including tripods, pole extensions, pole mounting kits, guy wires, ground stakes and more.
SCAN ME	The WH31-SRS is specifically designed to house the WH31E temperature / humidity sensor, WH31P waterproof probed thermometer and WH31L Lightning Detector. The radiation shield allows airflow while protecting the sensor from the elements and the effects of solar radiation. 

17 Liability Disclaimer

Please help in the preservation of the environment and return used batteries to an authorized depot.
The electrical and electronic wastes contain hazardous substances. Disposal of electronic waste in wild country and/or in unauthorized grounds strongly damages the environment.

Reading the “User manual” is highly recommended. The manufacturer and supplier cannot accept any responsibility for any incorrect readings and any consequences that occur should an inaccurate reading take place.

This product is designed for use in the home only as indication of weather conditions. This product is not to be used for medical purposes or for public safety information.

The specifications of this product may change without prior notice.

This product is not a toy. Keep out of the reach of children.

No part of this manual may be reproduced without written authorization of the manufacturer.

Ambient, LLC WILL NOT ASSUME LIABILITY FOR INCIDENTAL, CONSEQUENTIAL, PUNITIVE, OR OTHER SIMILAR DAMAGES ASSOCIATED WITH THE OPERATION OR MALFUNCTION OF THIS PRODUCT.

 ©Copyright 2025, Ambient LLC. All Rights Reserved.

18 FCC Statement

Statement according to FCC part 15.19:
This device complies with part 15 of the FCC rules. Operation is subject to the following two conditions:

1. This device may not cause harmful interference.
2. This device must accept any interference received, including interference that may cause undesired operation.

Statement according to FCC part 15.21:
Modifications not expressly approved by this company could void the user's authority to operate the equipment.
Statement according to FCC part 15.105:
NOTE: This equipment has been tested and found to comply with the limits for a Class B digital device, pursuant to Part 15 of the FCC Rules. These limits are designed to provide reasonable protection against harmful interference in a residential installation. This equipment generates, uses, and can radiate radio frequency energy and, if not installed and used in accordance with the instructions, may cause harmful interference to radio communications.
However, there is no guarantee that interference will not occur in a particular installation. If this equipment does cause harmful interference to radio or television reception, which can be determined by turning the equipment off and on, the user is encouraged to try to correct the interference by one or more of the following measures:

- Reorient or relocate the receiving antenna.
- Increase the separation between the equipment and receiver.
- Connect the equipment into an outlet on a circuit different from that to which the receiver is connected.
- Consult the dealer or an experienced radio/TV technician for help.

19 Warranty Information

Ambient, LLC provides a 1-year limited warranty on this product against manufacturing defects in materials and workmanship.

This limited warranty begins on the original date of purchase, is valid only on products purchased and only to the original purchaser of this product. To receive warranty service, the purchaser must contact Ambient, LLC for problem determination and service procedures.

Warranty service can only be performed by an Ambient, LLC. The original dated bill of sale must be presented upon request as proof of purchase to Ambient, LLC.

Your Ambient, LLC warranty covers all defects in material and workmanship with the following specified exceptions: (1) damage caused by accident, unreasonable use or neglect (lack of reasonable and necessary maintenance); (3) damage resulting from failure to follow instructions contained in your owner’s manual; (4) damage resulting from the performance of repairs or alterations by someone other than an authorized Ambient, LLC authorized service center; (5) units used for other than personal use (6) applications and uses that this product was not intended (7) the products inability to receive a signal due to any source of interference or metal obstructions and (8) extreme acts of nature, such as lightning strikes or floods.

This warranty covers only actual defects within the product itself and does not cover the cost of installation or removal from a fixed installation, normal set-up or adjustments, claims based on misrepresentation by the seller or performance variations resulting from installation-related circumstances.

20 California Prop 65

WARNING: Use of the Ambient Weather Products can expose you to chemicals, including lead and lead compounds, which are known to the State of California to cause cancer and bisphenol A (BPA), and phthalates DINP and/or DEHP, which are known to the State of California to cause birth defects or other reproductive harm.

Can I Trust that Ambient Weather Products are Safe Despite this Warning?

In 1986, California voters approved the Safe Drinking Water and Toxic Enforcement Act known as Proposition 65 or Prop 65. The purpose of Proposition 65 is to ensure that people are informed about exposure to chemicals known by the State of California to cause cancer, birth defects and/or other reproductive harm. A company with ten or more employees that operates within the State of California (or sells products in California) must comply with the requirements of Proposition 65. To comply, businesses are: (1) prohibited from knowingly discharging listed chemicals into sources of

 ©Copyright 2025, Ambient LLC. All Rights Reserved.

drinking water; and (2) required to provide a "clear and reasonable" warning before knowingly and intentionally exposing anyone to a listed chemical. Proposition 65 mandates that the Governor of California maintain and publish a list of chemicals that are known to cause cancer, birth defects and/or other reproductive harm. The Prop 65 list, which must be updated annually, includes over 1,000 chemicals, including many that are commonly used in the electronics industry.

Although our manufacturing process is "lead-free" and RoHS compliant, it remains possible that trace amounts of lead could be found in components or subassemblies of Ambient Weather Products. Bisphenol A (BPSA) could conceivably be present in minute amounts in our plastic housings, lenses, labels, or adhesives, and DEHP & DINP (phthalates) could possibly be found in PVC wire coatings of our cables, housings, and power cords. Unlike RoHS, Prop 65 does not establish a specific threshold for reporting on the substances of concern and instead sets forth a much less definitive standard requiring that the business demonstrate with certainty that there is "no significant risk" resulting from exposure. With respect to carcinogens, the "no significant risk" level is defined as the level which is calculated to result in not more than one excess case of cancer in 100,000 individuals exposed over a 70-year lifetime. In other words, if you are exposed to the chemical in question at this level every day for 70 years, theoretically, it will increase your chances of getting cancer by no more than 1 case in 100,000 individuals so exposed. With respect to reproductive toxicants, the "no significant risk" level is defined as the level of exposure which, even if multiplied by 1,000, will not produce birth defects or other reproductive harm. In other words, the level of exposure is below the "no observable effect level," divided by 1,000. (The "no observable effect level" is the highest dose level which has not been associated with observable reproductive harm in humans or test animals.) Proposition 65 does not clarify whether exposure is to be measured only in normal operation, or in the event of misuse such as intentionally damaging, incinerating or

consuming an Ambient Weather Product or component and Ambient Weather has not attempted to evaluate the level of exposure.

A Proposition 65 warning means one of two things: (1) the business has evaluated the exposure and has concluded that it exceeds the "no significant risk level"; or (2) the business has chosen to provide a warning simply based on its knowledge about the presence of a listed chemical without attempting to evaluate the exposure. The California government has itself clarified that "The fact that a product bears a Proposition 65 warning does not mean by itself that the product is unsafe." The government has also explained, "You could think of Proposition 65 more as a 'right to know' law than a pure product safety law."

While using Ambient Weather Products as intended, we believe any potential exposure would be negligible or well within the "no significant risk" range. However, to ensure compliance with California law and our customers' right to know, we have elected to place the Proposition 65 warning signs on Ambient Weather Products.

For further information about California's Proposition 65, please visit https://oehha.ca.gov/prop65/background/p65plain.html



 ©Copyright 2025, Ambient LLC. All Rights Reserved.