ambient weather®

SOIL MOISTURE, TEMPERATURE & EC SENSOR

Model WH51SM



USER MANUAL

CONTENTS

Introduction 3
Features 4
Getting Started 5
Setup Guide 6
Console / Receiver 8
AmbientWeather.net 12
Specifications 13
Troubleshooting 14
Liability Disclaimer 15
FCC Statement 16
Warranty Information 17
California Prop 65 17

INTRODUCTION

Thank you for your purchase of the Ambient Weather WH51SM Soil Moisture, Temperature & EC Sensor. This 3-in-1 sensor measures soil moisture, soil temperature and soil electrical conductivity (EC). The following user guide provides step by step instructions for installation, operation, and troubleshooting. To download the latest manual and additional troubleshooting tips, please visit:

https://ambientweather.com/faqs/question/tags/tag/WH51SM/

The soil sensor is not a stand-alone device and requires a compatible Ambient Weather console or gateway (see Console / Receiver) to view and upload the data to our cloud hosting service at AmbientWeather.net.

To see if your weather station is compatible, please visit:

https://ambientweather.com/faqs/question/tags/tag/WH51SM/

The following console and gateway firmware versions or greater support the soil sensor:

- Firmware revision number: V_._._
- Wi-Fi Firmware: AMBWeatherV_._._

For details on updating the firmware, consult your weather station user manual.

FEATURES

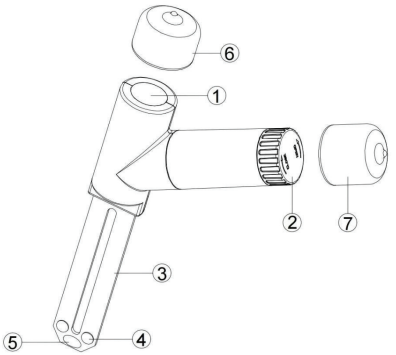

Figure 1

NO	ITEM
1	LED Indicator (RF transmission)
2	Battery Compartment Cap
3	Soil Moisture Sensor
4	Conductivity (EC) Sensor
5	Soil Temperature Sensor
6	LED Protection Cap (light shielding)
7	Battery Cap Protection Cover

The WH51SM combines three soil measurements in one wireless probe. Readings are transmitted to your console and uploaded to AmbientWeather.net, where you can view, graph and set alerts on each value.

Soil Moisture: uses capacitive Frequency Domain Reflectometry (FDR), which measures moisture from the soil's dielectric constant. Readings are lowest in air and highest in water, and closely follow the actual water content of the soil.

Soil Temperature: a high-precision NTC thermistor in close contact with the soil measures the temperature at the root zone, not the air temperature.

Electrical Conductivity (EC): dual electrodes measure the concentration of dissolved salts in the soil, a key indicator of fertilizer (nutrient) level and soil salinity. Results are shown in microsiemens per centimeter (µS/cm).

Other features include:

- Measures every 70 seconds; transmits every 10 seconds when a significant change is detected.
- Custom calibration of soil moisture (0%AD and 100%AD) and EC (gain) for different soil types.
- IP66 waterproof design with silicone protective caps.
- Red LED indicates data transmission and operational faults.
- Long wireless range, up to 330 feet (100 meters) line of sight (100 feet under most conditions).
- Supports up to 8 channels.

GETTING STARTED

The Ambient Weather WH51SM soil sensor includes the following:

QTY	ITEM
1	Soil Moisture, Temperature & EC Sensor: 5.8" length x 3.4" width x 1.0" depth
1	Short Silicone Cap (LED Indicator)
1	Long Silicone Cap (Battery Compartment)
1	User Manual

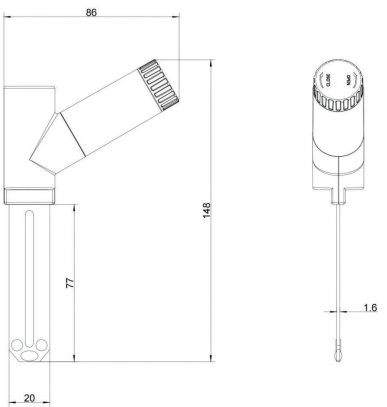

Figure 2 (dimensions in millimeters)

SETUP GUIDE

Batteries and Silicone Caps

The soil sensor requires 1 x AA battery (not included). We recommend Energizer Lithium batteries for longer life and a wider operating temperature range.

- Remove the battery compartment cap and insert 1 x AA battery, observing polarity as shown in Figure 3A. Replace the battery cap.
- After the sensor has been verified (see Pre-installation), install the long silicone cap over the battery compartment and the short silicone cap over the LED indicator as shown in Figure 3B.

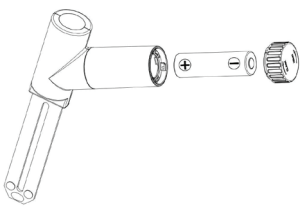

Figure 3A

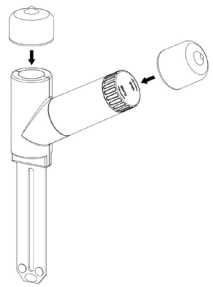

Figure 3B

BATTERY CARE: *Clean the battery contacts before installation, remove the battery during long periods of non-use, and recycle used batteries according to local regulations.*

Pre-installation

Before installing the sensor into its permanent location, we recommend verifying proper operation (reference the Console / Receiver section for the console display).

- In open air, verify the moisture and EC readings are 0 and the soil temperature matches the current air temperature.
- Place the sensor in a cup of pure water. Verify the moisture reading rises to about 90% or greater.
- Add table salt to the water and verify the EC reading increases.

NOTE: *When the sensor detects a significant change, it transmits every 10 seconds, so readings update quickly during testing.*

Sensor Placement

Use a tool to dig a hole in the soil for the sensor, then insert the probe so that the soil reaches the MAX DEPTH marker on the sensor body (Figure 4). Do not force the sensor into hard, compacted soil.



Figure 4

For the best EC readings, moisten the soil to a moderate level (not muddy) before installing so the electrodes make good contact. Avoid concentrating high-strength fertilizer next to the sensor.

> **NOTE:** *Do not bury the sensor past the MAX DEPTH marker. Burying the battery compartment may cause premature failure.*

The following is a table of reception loss vs. the transmission medium. Each "wall" or obstruction decreases the transmission range by the factor shown below.

MEDIUM	RF SIGNAL STRENGTH REDUCTION
Glass (untreated)	5-15%
Plastics	10-15%
Wood	10-40%
Brick	10-40%
Concrete	40-80%
Metal	90-100%

CONSOLE / RECEIVER

The soil sensor is currently supported by the following models:

- OBSERVERIP2.0 / WEATHERHUB
- WS-2000
- WS-4000
- WS-5000

NOTE: *Some consoles display soil moisture only. Soil temperature and EC are available on AmbientWeather.net (see AmbientWeather.net). [Confirm which consoles display soil temperature and EC.]*

Display

The console displays soil moisture in the upper right-hand corner, and each channel automatically scrolls every 5 seconds on the display. The scrolling feature cannot be disabled.

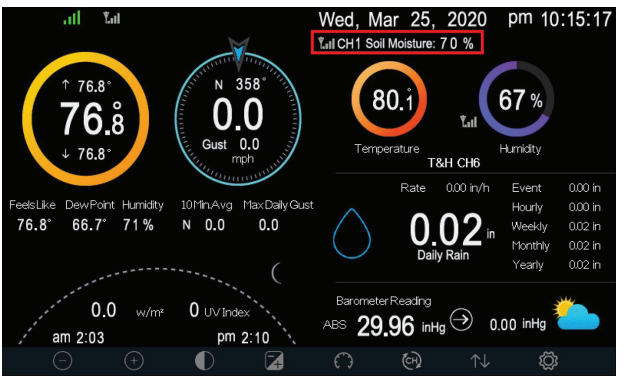

Figure 5

Sensor Channel Designation

Each WH51SM sensor has a hexadecimal sensor ID (Figure 6) printed on a label on the sensor.



Figure 6

The sensor channel designation is based on the order in which they were powered up and recognized by the console. Thus, we recommend you power up each sensor individually and verify they are read by the console, rather than all at the same time. Each time a sensor is recognized by the console note the channel assigned by the console.

NOTE: *You may want to mark each sensor with the channel number it is assigned to.*

NOTE: *The WH51SM shares soil channels with other Ambient Weather soil moisture sensors. The total number of soil sensors cannot exceed the number of channels supported by your console.*

Calibration

The soil moisture sensor provides for optional two-point linear calibration. This is useful, due to different soil types and density. Different soil types can produce very different sensor output values at the same moisture level, so in general the sensor should be calibrated to suit your soil type. For general use, watching the moisture trend over time and noting your watering habits is often enough to set your own dry and wet thresholds.

The calibration equation is defined as:

% Soil Moisture (calibrated) = (Now AD – 0%AD) * 100 / (100%AD – 0%AD)

Where AD stands for “analog to digital” and is the unscaled digital value measured by the sensor, Now AD is the currently measured AD and the other parameters are described below.

Customize OFF (factory default): Soil moisture is calculated using the default dry and wet set points, 0%AD = 70 and 100%AD = 500. For example, when Now AD is 310, the calculated moisture is:

(310 – 70) * 100 / (500 – 70) = 56%

Customize ON: The 0%AD and 100%AD set points can be adjusted to match your soil type.

- 0%AD adjusts for dry condition readings. If the displayed moisture reading is too high when the soil is dry, increase the 0%AD value.
- 100%AD adjusts for wet condition readings. If the displayed moisture reading is too low when the soil is saturated, decrease the 100%AD value.

0% SOIL MOISTURE SET POINT

To determine the 0% soil moisture, collect a soil sample in a cup from where the sensor will be installed, and allow the soil to completely dry out. Next, place the soil sensor in the medium and allow the sensor to stabilize for 24 hours.

Next, set the **0%AD** calibration set point to the **Now AD** value.

Example: With the sensor in open air, the display reads 40% (much higher than the expected 10% or less). Now AD = 183 and 100%AD = 500. To target a reading of 10%:

10 = (183 – 0%AD) * 100 / (500 – 0%AD)
→ 0%AD = 147 (integer part)

100% SOIL MOISTURE SET POINT

To determine the 100% soil moisture, collect a soil sample in a cup from where the sensor will be installed, and add water and mix until the soil is saturated, and there is no standing water. Next, place the soil sensor in the medium and allow the sensor to stabilize for 24 hours.

Next, set the **100%AD** calibration set point to the **Now AD** value.

Example: With the sensor in a glass of fresh water, the display reads 70% (much lower than the expected 95%). Now AD = 183 and 0%AD = 70. To target a reading of 95%:

95 = (183 – 70) * 100 / (100%AD – 70) →
100%AD = 188 (integer part)

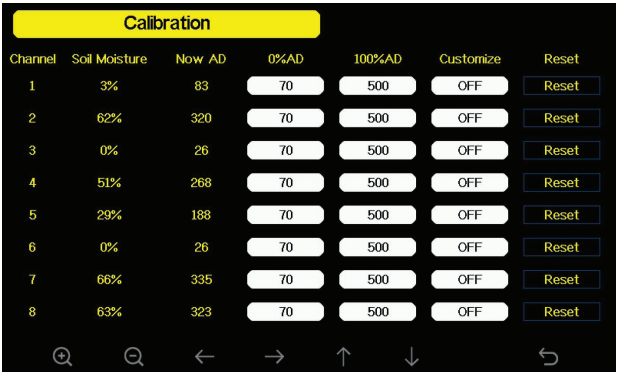

Figure 7

Once the 0%AD and 100%AD are entered, set **Customize** to **ON**. To return to the non-calibrated settings, set **Customize** to **OFF**. Select **Reset** to restore to factory default.

The 0%AD setting range is 0 to 200. The 100%AD setting range is (0%AD + 10) to 1000.

EC GAIN

The EC sensor is factory calibrated with standard solutions for general agricultural and horticultural use. If needed, an **EC Gain** setting scales the reading. For example, if the EC reading is 100 µS/cm and the gain is set to 1.1, the reading becomes 110 µS/cm. The gain setting range is 0.5 to 1.5. [Confirm EC Gain location on Ambient consoles.]

> **NOTE:** *Calibration settings are stored in the console, not the sensor. If more than one console receives data from the same sensor, enter the same calibration values on each console. We recommend recording your calibration values for future use.*

For more information on accessing the calibration panel, please reference your weather station user manual.

Understanding Your Readings

Soil Temperature: Soil temperature changes slowly but has a large effect on plant growth. Under standard installation the reading reflects the root zone. In mulch, high organic matter or very wet or dry soil, it reports the temperature at the sensor location, so interpret it with your soil type and conditions in mind.

EC (Electrical Conductivity): EC reflects the salt concentration of the water in the soil, so it must be read together with soil moisture:

- After watering, EC usually drops temporarily because the salts are diluted.
- As the soil dries, salts concentrate and EC gradually rises.
- For judging fertilizer level, use the stable EC value after watering, once soil moisture has settled.

Watching EC rise after fertilizing and fall as plants use the nutrients shows whether fertilizer is being used effectively. Setting an EC alert on AmbientWeather.net can warn you before fertilizer levels become high enough to burn roots.

AMBIENTWEATHER.NET

Once the sensor(s) are reporting to the display console, a tile will appear on your dashboard automatically:

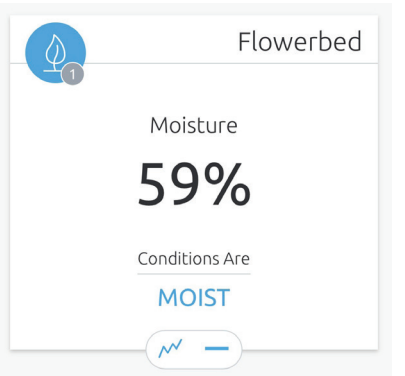

Figure 8

With the soil sensor and AmbientWeather.net, you can view soil moisture, soil temperature and EC, set email and text alerts, graph and download data, connect to external devices using IFTTT as well as connect to Amazon Alexa and Google Home. [Confirm soil temperature and EC tiles/graphs on AmbientWeather.net.]

SPECIFICATIONS

Sensor Specifications

PARAMETER	SPECIFICATION
Measurement principle (moisture)	Frequency Domain Reflectometry (FDR)
Moisture range / resolution	0 – 100% / 1%
Moisture accuracy	±5%
Soil temperature range	-40 to 140 °F (-40 to 60 °C)
Soil temperature accuracy / resolution	±1.8 °F (±1 °C) / 0.1 °C
EC range / resolution	0 – 10,000 µS/cm / 10 µS/cm
EC accuracy	±100 µS/cm (0 – 1,000); ±15% (1,000 – 10,000)
0%AD setting range	0 – 200 (default: factory calibration)
100%AD setting range	0%AD + 10 – 1000 (default: factory calibration)
EC gain range	0.5 – 1.5
Operating range	-40 to 140 °F (-40 to 60 °C); moisture and EC not reliable below 32 °F (0 °C)
Housing / probe material	ABS / FR-4 (glass fiber reinforced epoxy)
Dimensions	5.8" x 3.4" x 1.0" (148 x 86 x 25 mm)
Waterproof rating	IP66

Wireless Specifications

- Line of sight wireless sensor RF transmission (in open air): 330 feet (100 meters), 100 feet under most conditions
- Update Rate: 70 seconds
- RF Frequency: 915 MHz

Power Consumption

- 1 x AA battery (not included). Alkaline or Lithium recommended.
- Battery life: Minimum 12 months.

TROUBLESHOOTING

PROBLEM	SOLUTION
Sensor not reporting to console	Verify the battery is installed correctly and the LED flashes. Move the sensor closer to the console. Update your console firmware to the latest version (see Introduction).
Readings do not change	Fully submerge the probe in water for about 1 minute. If the readings do not change significantly, contact technical support.
EC readings erratic or low	Make sure the soil around the probe is moist and in firm contact with the electrodes. Inspect and gently clean the electrodes (about every 3 months) to remove salt crystals or dirt.
Moisture reads too high or low	Calibrate the sensor for your soil type (see Calibration).

- Email Support: support@ambientweather.com
- Technical Support: 480-346-3380 (M-F 8am to 4pm Arizona Time)

LIABILITY DISCLAIMER

Please help in the preservation of the environment and return used batteries to an authorized depot. The electrical and electronic wastes contain hazardous substances. Disposal of electronic waste in wild country and/or in unauthorized grounds strongly damages the environment.

Reading the “User manual” is highly recommended. The manufacturer and supplier cannot accept any responsibility for any incorrect readings and any consequences that occur should an inaccurate reading take place.

This product is designed for use in the home only as indication of weather conditions. This product is not to be used for medical purposes or for public safety information.

The specifications of this product may change without prior notice.

This product is not a toy. Keep out of the reach of children.

No part of this manual may be reproduced without written authorization of the manufacturer.

Ambient, LLC WILL NOT ASSUME LIABILITY FOR INCIDENTAL, CONSEQUENTIAL, PUNITIVE, OR OTHER SIMILAR DAMAGES ASSOCIATED WITH THE OPERATION OR MALFUNCTION OF THIS PRODUCT.

FCC STATEMENT

Statement according to FCC part 15.19:

This device complies with part 15 of the FCC rules.
Operation is subject to the following two conditions:

(1) This device may not cause harmful interference.

(2) This device must accept any interference received, including interference that may cause undesired operation.

Statement according to FCC part 15.21:

Modifications not expressly approved by this company could void the user's authority to operate the equipment.

Statement according to FCC part 15.105:

NOTE: This equipment has been tested and found to comply with the limits for a Class B digital device, pursuant to Part 15 of the FCC Rules. These limits are designed to provide reasonable protection against harmful interference in a residential installation. This equipment generates, uses and can radiate radio frequency energy and, if not installed and used in accordance with the instructions, may cause harmful interference to radio communications.

However, there is no guarantee that interference will not occur in a particular installation. If this equipment does cause harmful interference to radio or television reception, which can be determined by turning the equipment off and on, the user is encouraged to try to correct the interference by one or more of the following measures:

- Reorient or relocate the receiving antenna.
- Increase the separation between the equipment and receiver.
- Connect the equipment into an outlet on a circuit different from that to which the receiver is connected.
- Consult the dealer or an experienced radio/TV technician for help.

WARRANTY INFORMATION

Ambient, LLC provides a 1-year limited warranty on this product against manufacturing defects in materials and workmanship.

This limited warranty begins on the original date of purchase, is valid only on products purchased and only to the original purchaser of this product. To receive warranty service, the purchaser must contact Ambient, LLC for problem determination and service procedures.

Warranty service can only be performed by a Ambient, LLC. The original dated bill of sale must be presented upon request as proof of purchase to Ambient, LLC.

Your Ambient, LLC warranty covers all defects in material and workmanship with the following specified exceptions: (1) damage caused by accident, unreasonable use or neglect (lack of reasonable and necessary maintenance); (3) damage resulting from failure to follow instructions contained in your owner's manual; (4) damage resulting from the performance of repairs or alterations by someone other than an authorized Ambient, LLC authorized service center; (5) units used for other than personal use (6) applications and uses that this product was not intended (7) the products inability to receive a signal due to any source of interference or metal obstructions and (8) extreme acts of nature, such as lightning strikes or floods.

This warranty covers only actual defects within the product itself, and does not cover the cost of installation or removal from a fixed installation, normal set-up or adjustments, claims based on misrepresentation by the seller or performance variations resulting from installation-related circumstances.

CALIFORNIA PROP 65

WARNING: *Use of the Ambient Weather Products can expose you to chemicals, including lead and lead compounds, which are known to the State of California to cause cancer and bisphenol A (BPA), and phthalates DINP and/or DEHP, which are known to the State of California to cause birth defects or other reproductive harm.*

Can I Trust that Ambient Weather Products are Safe Despite this Warning?

In 1986, California voters approved the Safe Drinking Water and Toxic Enforcement Act known as Proposition 65 or Prop 65. The purpose of Proposition 65 is to ensure that people are informed about exposure to chemicals known by the State of California to cause cancer, birth defects and/or other reproductive harm. A company with ten or more employees that operates within the State of California (or sells products in California) must comply with the requirements of Proposition 65. To comply, businesses are: (1) prohibited from knowingly discharging listed chemicals into sources of drinking water; and (2) required to provide a "clear and reasonable" warning before knowingly and intentionally exposing anyone to a listed chemical. Proposition 65 mandates that the Governor of California maintain and publish a list of chemicals that are known to cause cancer, birth defects and/or other reproductive harm. The Prop 65 list, which must be updated annually, includes over 1,000 chemicals, including many that are commonly used in the electronics industry.

Although our manufacturing process is "lead-free" and RoHS compliant, it remains possible that trace amounts of lead could be found in components or subassemblies of Ambient Weather Products. Bisphenol A (BPSA) could conceivably be present in minute amounts in our plastic housings, lenses, labels or adhesives, and DEHP & DINP (phthalates) could possibly be found in PVC wire coatings of our cables, housings, and power cords. Unlike RoHS, Prop 65 does not establish a specific threshold for reporting on the substances of concern and instead sets forth a much less definitive standard requiring that the business demonstrate with certainty that there is "no significant risk" resulting from exposure. With respect to carcinogens, the "no significant risk" level is defined as the level which is calculated to result in not more than one excess case of cancer in 100,000 individuals exposed over a 70-year lifetime. In other words, if you are exposed to the chemical in question at this level every day for 70 years, theoretically, it will increase your chances of getting cancer by no more than 1 case in 100,000 individuals so exposed. With respect to reproductive toxicants, the "no

significant risk" level is defined as the level of exposure which, even if multiplied by 1,000, will not produce birth defects or other reproductive harm. In other words, the level of exposure is below the "no observable effect level," divided by 1,000. (The "no observable effect level" is the highest dose level which has not been associated with observable reproductive harm in humans or test animals.) Proposition 65 does not clarify whether exposure is to be measured only in normal operation, or in the event of misuse such as intentionally damaging, incinerating or consuming an Ambient Weather Product or component and Ambient Weather has not attempted to evaluate the level of exposure.

A Proposition 65 warning means one of two things: (1) the business has evaluated the exposure and has concluded that it exceeds the "no significant risk level"; or (2) the business has chosen to provide a warning simply based on its knowledge about the presence of a listed chemical without attempting to evaluate the exposure. The California government has itself clarified that "The fact that a product bears a Proposition 65 warning does not mean by itself that the product is unsafe." The government has also explained, "You could think of Proposition 65 more as a 'right to know' law than a pure product safety law."

While using Ambient Weather Products as intended, we believe any potential exposure would be negligible or well within the "no significant risk" range. However, to ensure compliance with California law and our customers' right to know, we have elected to place the Proposition 65 warning signs on Ambient Weather Products.

For further information about California's Proposition 65, please visit https://oehha.ca.gov/prop65/background/p65plain.html

CUSTOMER SERVICE

Email Support:
support@ambientweather.com

Technical Support:
480-346-3380 (M-F 8am to 4pm Arizona Time)

©Copyright 2026, Ambient LLC. All Rights Reserved.

MADE IN CHINA