Ambient Weather EZ-HD-PTP-125 Heavy Duty Mast to Mast Mounting Kit for Ambient Weather Weather Stations User Manual

Table of Contents

1. Introduction 1
2. Accessories 1
3. Parts 1
4. Warnings 2
5. Recommended Tools and Materials 2
6. Mounting Installation 2
7. Optional Mast Extension 4
8. Liability Disclaimer 4
9. Warranty Information 4
10. California Prop 65 5

1. Introduction

The EZ-HD-PTP-125 mounting kit allows you to connect your weather station to another pole that is between 1 and 2” diameter. Two sets of clamps are added for stability, as well as a mounting pole for connecting to your weather station with pre-drilled holes.

The Ambient Weather 1.25" OD pole mounting kit is constructed of rust proof 10-steel tubing, galvanized using the Flo-Coat (zinc-chromate ploymer) for excellent corrosion proof protection.

Pole is made of three assemblable 14" x 1.25"-diameter masts. Add a mast extension (see below) to extend the pole an additional 35".

2. Accessories

Item Number	Description
EZ-125-35M	**Mast Extension**. Add up to two mast extensions to extend the height of 31" per mast extension.

Figure 1

3. Parts

Qty	Description
3	14" x 1.25" - diameter masts
4	8” x 5/16” Threaded Rods
8	Pole Mounting Brackets
16	5/16” dia – 1/2” Keps Nuts

©Copyright 2016, Ambient LLC. All Rights Reserved.

Figure 2

4. Warnings

⚠ **WARNING**: Improper installation of the mounting kit to your home or building may result in leaks. We recommend a licensed roofing specialist for invasive installations.

⚠ **WARNING**: Any metal object may attract a lightning strike, including your weather station and mount. Never install your weather station in a thunderstorm.

⚠ **WARNING:** We recommend properly grounding the mount to avoid extensive damage to the weather station and structure. Consult a licensed electrician or local lightning detection expert prior to installing a ground wire.

⚠ **WARNING:** Installing your weather station in a high location may result in injury or death.

5. Recommended Tools and Materials

- 1/2” wrench
- Level or Plumb

6. Mounting Installation

1. Reference Figure 3. Assemble mounting brackets, lock nuts, threaded rods and nuts around your existing 1-2” diameter pole.

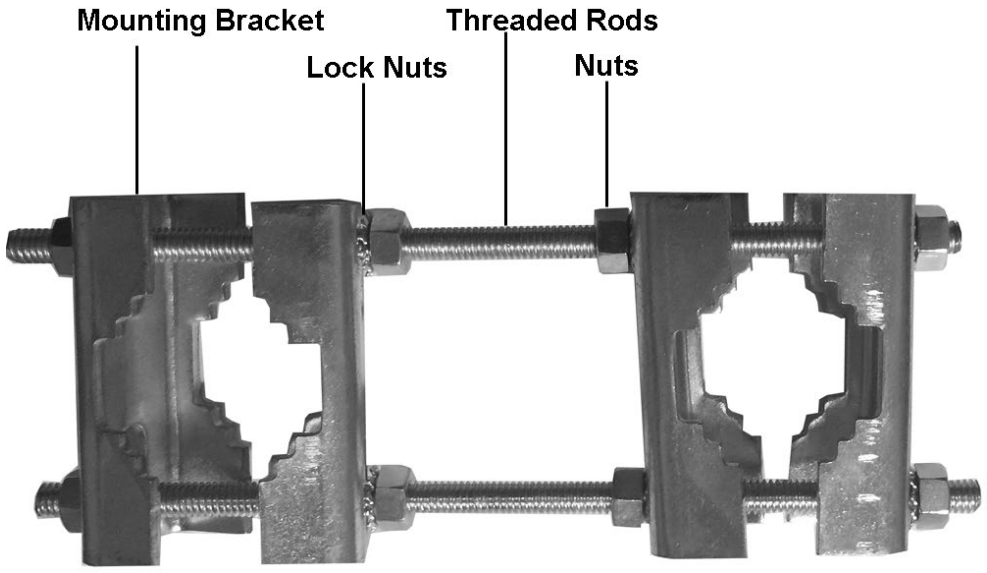

Figure 3

 ©Copyright 2016, Ambient LLC. All Rights Reserved.



Figure 4

2. Assemble the mounting pole. Reference Figure 4 above. Insert one of the swaged ends into a smooth end and tighten, by applying rotational force (hand tight is usually enough), so the extension does not rotate loose when permanently installed.

   Repeat this step for the second and third 14” mast. The entirely smooth 14” mast should be on the bottom of the assembly.

3. Reference Figure 5. Insert the assembled weather station mast (included) and your existing mounting mast and tighten both brackets securely around the poles.

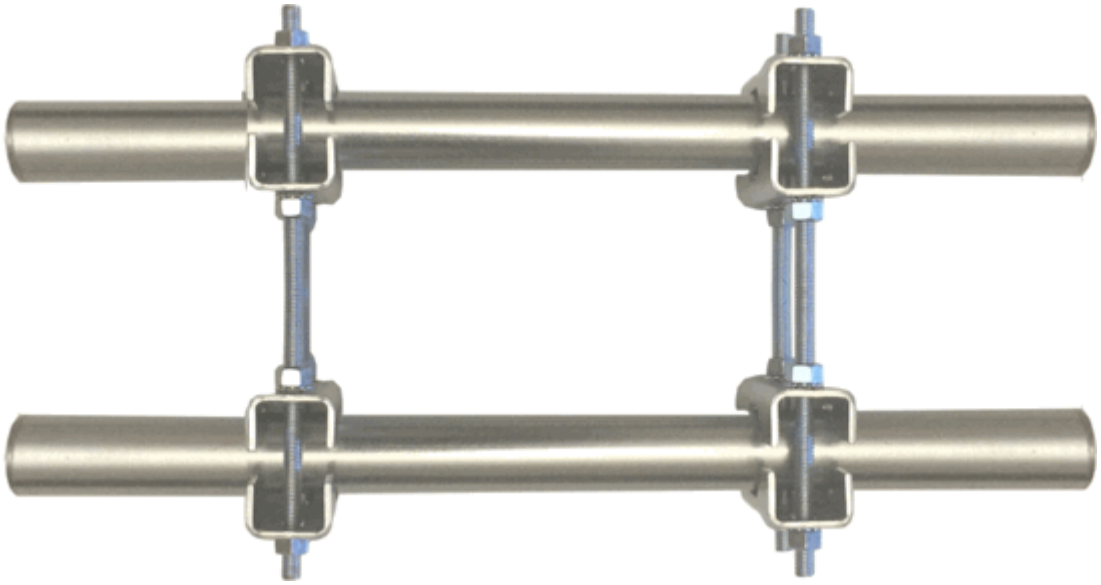

Figure 5

4. Reference Figure 6. Mount the weather station and mast to mast brackets vertically. Make certain the weather station is plumb and level.

 ©Copyright 2016, Ambient LLC. All Rights Reserved.



Figure 6

7. Optional Mast Extension

An optional mast extension (Item No. EZ-125-35M) allows you to extend your mounting mast by 31”.



Figure 4

Insert the swaged end of the mast extension into the mounting tripod mast and tighten so the extension does not rotate, as shown in Figure 8.

Repeat this step for additional mast extensions (maximum two is recommended).



 ©Copyright 2016, Ambient LLC. All Rights Reserved.

Figure 5

8. Liability Disclaimer

Please help in the preservation of the environment and return used batteries to an authorized depot. The electrical and electronic wastes contain hazardous substances. Disposal of electronic waste in wild country and/or in unauthorized grounds strongly damages the environment.

Reading the “User manual” is highly recommended. The manufacturer and supplier cannot accept any responsibility for any incorrect readings and any consequences that occur should an inaccurate reading take place. This product is designed for use in the home only as indication of weather conditions. This product is not to be used for medical purposes or for public safety information. The specifications of this product may change without prior notice.

This product is not a toy. Keep out of the reach of children. No part of this manual may be reproduced without written authorization of the manufacturer.

Ambient, LLC WILL NOT ASSUME LIABILITY FOR INCIDENTAL, CONSEQUENTIAL, PUNITIVE, OR OTHER SIMILAR DAMAGES ASSOCIATED WITH THE OPERATION OR MALFUNCTION OF THIS PRODUCT.

9. Warranty Information

Ambient, LLC provides a 1-year limited warranty on this product against manufacturing defects in materials and workmanship.

This limited warranty begins on the original date of purchase, is valid only on products purchased and only to the original purchaser of this product. To receive warranty service, the purchaser must contact Ambient, LLC for problem determination and service procedures.

Warranty service can only be performed by a Ambient, LLC. The original dated bill of sale must be presented upon request as proof of purchase to Ambient, LLC.

Your Ambient, LLC warranty covers all defects in material and workmanship with the following specified exceptions: (1) damage caused by accident, unreasonable use or neglect (lack of reasonable and necessary maintenance); (3) damage resulting from failure to follow instructions contained in your owner’s manual; (4) damage resulting from the performance of repairs or alterations by someone other than an authorized Ambient, LLC authorized service center; (5) units used for other than personal use (6) applications and uses that this product was not intended (7) the products inability to receive a signal due to any source of interference or metal obstructions and (8) extreme acts of nature, such as lightning strikes or floods.

This warranty covers only actual defects within the product itself and does not cover the cost of installation or removal from a fixed installation, normal set-up or adjustments, claims based on misrepresentation by the seller or performance variations resulting from installation-related circumstances.

10. California Prop 65

WARNING: Use of the Ambient Weather Products can expose you to chemicals, including lead and lead compounds, which are known to the State of California to cause cancer and bisphenol A (BPA), and compounds, which are known to the State of California to cause cancer and bisphenol A (BPA), and

 ©Copyright 2016, Ambient LLC. All Rights Reserved.

phthalates DINP and/or DEHP, which are known to the State of California to cause birth defects or other reproductive harm.

Can I Trust that Ambient Weather Products are Safe Despite this Warning? In 1986, California voters approved the Safe Drinking Water and Toxic Enforcement Act known as Proposition 65 or Prop 65. The purpose of Proposition 65 is to ensure that people are informed about exposure to chemicals known by the State of California to cause cancer, birth defects and/or other reproductive harm. A company with ten or more employees that operates within the State of California (or sells products in California) must comply with the requirements of Proposition 65. To comply, businesses are: (1) prohibited from knowingly discharging listed chemicals into sources of drinking water; and (2) required to provide a "clear and reasonable" warning before knowingly and intentionally exposing anyone to a listed chemical. Proposition 65 mandates that the Governor of California maintain and publish a list of chemicals that are known to cause cancer, birth defects and/or other reproductive harm. The Prop 65 list, which must be updated annually, includes over 1,000 chemicals, including many that are commonly used in the electronics industry.

Although our manufacturing process is "lead-free" and RoHS compliant, it remains possible that trace amounts of lead could be found in components or subassemblies of Ambient Weather Products.
Bisphenol A (BPSA) could conceivably be present in minute amounts in our plastic housings, lenses, labels or adhesives, and DEHP & DINP (phthalates) could possibly be found in PVC wire coatings of our cables, housings, and power cords. Unlike RoHS, Prop 65 does not establish a specific threshold for reporting on the substances of concern and instead sets forth a much less definitive standard requiring that the business demonstrate with certainty that there is "no significant risk" resulting from exposure. With respect to carcinogens, the "no significant risk" level is defined as the level which is calculated to result in not more than one excess case of cancer in 100,000 individuals exposed over a 70-year lifetime. In other words, if you are exposed to the chemical in question at this level every day for 70 years, theoretically, it will increase your Version 1.14 ©Copyright 2020, Ambient LLC. All



 ©Copyright 2016, Ambient LLC. All Rights Reserved.