TecumsehPower®

Tecumseh Power Products
Fontana, CA 92337 USA
Phone: 855-888-3598
support@tecumsehpowerproducts.com
www.tecumsehpowerproducts.com

SNOWKING®

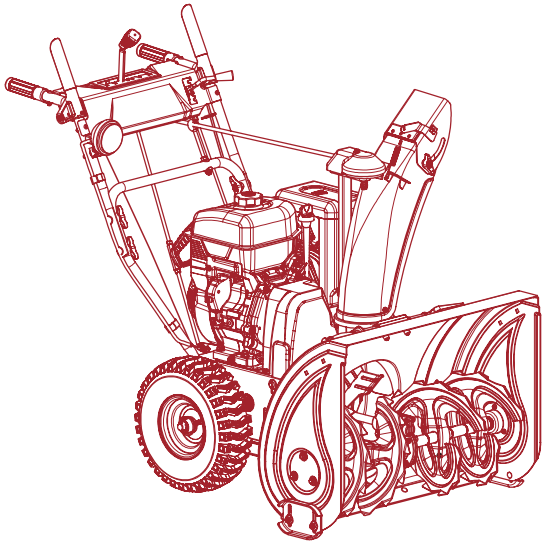

OWNER'S MANUAL

SK28WM

SNOW BLOWER

SNOWKING®

WARNING

- ▲ Any changes by the operators or dealers at their own are forbidden.
- ▲ Any other purposes except snow blowing are not allowed.
- ▲ Please read the owner's manual carefully and make sure you understand the instructions before using the machine.
- ▲ Any damages or injuries called by disobey the above terms, our company will be free from any responsibilities and warranty services for this machine will be terminated accordingly.



- This manual contains information on operation and maintenance of the snow blower SK 28WM, which is based on the most recent product information available at the time of approval for printing.
- We reserve the right to make amendments without prior notice and without incurring any obligation for sequences.
- Without written approval, any part of this manual is not allowed to be duplicated.
- The manual is considered as part of the snow thrower, which is provided when the machine is sold.
- The product may differs from the phase when the product is sold. The purchase is subject to the actual product.
- Executive Standard: ISO 8437. 1989+A1:1997 snow thrower.
- Engine production permission number: XK06-002-00252

SAFETY INFORMATION

- Safety is very important for you and others. We have written down important safety information in both manual and machine. Please read it carefully.
- Safety information gives you warning that you may bring potential danger to yourself and others. The key words with " ⚠ " are put before every piece of information. These words are "danger, warning, attention".

Please pay attention to the meanings of the above-mentioned identifiers.

⚠ DANGER: if you don't operate follow those indicated in the manual, serious injures, even death will be caused.

⚠ WARNING: if you don't operate follow those indicated in the manual, device damage and injures will be caused.

⚠ ATTENTION: if you don't operate follow those indicated in the manual, device damage and injures may be caused.

DAMAGE PREVENTION

You can see other important information marked with "ATTENTION".

ATTENTION: If you don't operate as those indicated in the manual,device damage will be caused.

SAFETY PRECAUTION



If snow thrower is operated by following those indicated in the manual, it will work safely and reliably as per it's designed. Before operating the snow thrower, please read and understand this manual carefully. Otherwise,injures and device damage will be caused.

SAFETY INSTRUCTIONS

- Before using this machine, make sure all components are installed, for example, the discharge chute assembly.
- Gasoline is flammable, you must pay attention to fire and exploding.
- The regulated fuel and lube oil rating must strictly be used. And it must be clear.
- When starting engine, please turn gear lever to neutral position.
- Be careful about the auger, because it may hurt you! It's not allowed to step on the auger or stand before the auger when starting the machine.
- Before shifting the gear, you must disconnect the clutch (the gear lever handle must be put in the neutral position), avoiding injuries or damage to the machine. Don't use the snow thrower under effect of alcohol or medicine or when tired or ill.
- Reverse gear must be used with caution. Be careful not to get stumbled or fallen.
- Keep all persons, especially children or pets away from the snow thrower area.

◇As model is always improved, photos or illustrations may have difference comparing the actual machine.

CONTENTS

Safety instructions and warning.....03
Know your snow blower.....08
Packing list.....09
Assembly..... 11
Operation..... 18
Maintenance..... 26
Troubleshooting..... 29
Transportation,storage and disposal..... 31
Technical data..... 32
AiPower Product Warranty.....33

SAFETY INSTRUCTIONS AND WARNING

General safety instructions

1.Use the product correctly.Injury or death is a possible result of incorrect use. Only use the product for the tasks found in this manual. Do not use the product for other tasks.
2.Obey the instructions in this manual. Obey the safety symbols and the safety instructions. If the operator does not obey the instructions and the symbols. injury,damage or death is possible result.
3.Do not discard this manual. Use the instructions to assemble,to operate and to keep your product in good condition. Use the instructions for correct installation of attachments and accessories.Only use approved attachments and accessories.
4.Do not use a damaged product.Obey the maintenance schedule.Only do the maintenance work that you find an instruction about in this manual. An approved service center must do all other maintenance work.
5.This manual cannot include all situations that can occur when you use the product. Be careful and use your common sense.Do not operate the product or do maintenance to the product if you are not sure about of the situation. Speak to a product, expert your dealer,service agent or approved service center for information.
6.Disconnect the spark plug cable before you assemble the product,put the product into storage or do maintenance.
7.Do not use the product if it is changed from its initial specification.Do not change a part of the product without approval from the manufacturer. Only use parts that are approved by the manufacturer.Injury or death is a possible result of incorrect maintenance.
8.Do not breathe in the fumes from the engine. Long term inhalation of the engine's exhaust fumes is a health risk.
9.Do not start the product indoors or near flammable material.The exhaust fumes are hot and can contain a spark which can start a fire.Not sufficient airflow can cause injury or death because of asphyxiation or carbon monoxide.
10.When you use this product the engine makes an electromagnetic field. The electromagnetic field can cause damage to medical implants.Speak to your physician and medical implant manufacturer before you operate the product.
11.Do not let a child operate the product.Do not let a person,without knowledge of the instructions operate the product.
12.Make sure that you always monitor a person,with decreased physical capacity or mental capacity , that uses the product.A responsible adult must be there at all times.
13.Lock the product in an area that children and unapproved persons cannot access.
14.The product can eject objects and cause injuries.Obey the safety instructions to decrease the risk of injury or death.
15. Do not go away from the product when the engine is on.
16. The operator of the product is responsible if an accident occurs.
17. Before and while you walk rearward,look behind and down for small children,animals or other risks that can cause you to fall.

18. Make sure that parts are not damaged before you use the product.
19. Make sure that you are at a minimum 15 m (50 ft) away from other persons or animals before you use the product.Make sure that a person in adjacent area knows that you will use the product.
20. Refer to national or local laws.They can prevent or decrease the operation of the product in some conditions.

Training

1. Read understand and follow all instructions on the machine and in the manual(s) before operating this unit.Be thoroughly familiar with the controls and the proper use of the equipment.Know how to stop the unit and disengage the controls quickly.
2. Never allow children to operate the equipment.
3. Never allow adults to operate the equipment without proper instruction.
4. Keep the area of operation clear of all persons particularty small children.
5. Exercise caution to avoid slipping or falling,especially when operating the snow thrower in reverse.

Safety instructions for operation

1. Do not put hands or feet near or under rotating parts.Keep clear of the discharge opening at all times.
2. Exercise extreme caution when operating on or crossing gravel drives, walks,or roads.Stay alert for hidden hazards traffic.
3. After strikng a foreign object,stop the engine(motor),remove the wire from the spark plug,disconnect the cord on electric motors,thoroughly inspect the product for any damage,and repair the damage before restarting and operating the product.
4. If the product starts to vibrate abnormally,stop the engine (motor) and check immediately for the cause.Vibration is generally a warning of trouble.
5. Stop the engine(motor)whenever you leave the operating position, before unclogging the auger housing or chute deflector,and when making any repairs,adjustments or inspections.
6. When cleaning,repairing or inspecting the product,stop the engine and make certain the augers and all moving parts have stopped.Disconnect the spark plug wire and keep the wire away from the plug to prevent someone from accidentally the engine.
7. Do not run the engine indoors,except when starting the engine and for transporting the product in or out of the building. Open the outside doors;exhaust fumes are dangerous.
8. Exercise extreme caution when operating on slopes.
9. Never operate the product without proper guards,and other safety protective devices in place and working.
10. Never direct the chute deflector toward people or areas where property damage can occur.Keep children and others away.
11. Do not overload the product capacity by attempting to clear snow at too fast a rate.
12. Never operate the product at high transport speeds on slippery surfaces. Look behind and use care when operating in reverse.

13. Disengage power to the augers when the product is transported or not in use.
14. Use only attachments and accessories approved by the manufacturer of the product (such as wheel weights,counterweights,or cabs).
15. Never operate the product without good visibility or light.Always be sure of your footing,and keep a firm hold on the handles.Walk;never run.
16. Never touch a hot engine or muffler.

Work area safety

1.Thoroughly inspect the area where the equipment is to be used and remove all doormats,sleds,boards,wires,and other foreign objects.
2.Disengage all clutches and shift into neutral before starting the engine (motor).
3.Do not operate the product without wearing adequate winter garments. Avoid loose fitting clothing that can get caught in moving parts.Wear footwear that will improve footing on slippery surfaces.
4.Handle fuel with care;it is highly flammable.
a. Use an approved fuel container.
b. Never add fuel to a running engine or hot engine.
c. Fill fuel tank outdoors with extreme care. Never fill fuel tank indoors.
c. Never fill containers inside a vehicle or on a truck or trailer bed with a plastic liner.Always place containers on the ground,away from your vehicle,before filling.
e. When practical,remove gas-powered equipment from the truck or trailer and refuel it on the ground.If this is not possible,then refuel such equipment on a trailer with a portable container, rather than from a gasoline dispenser nozzle.
f. Keep the nozzle in contact with the rim of the fuel tank or container opening at all time,until refueling is complete.Do not use a nozzle lock-open device.
g. Replace gasoline cap securely and wipe up spilled fuel.
h. If fuel is spilled on clothing,change clothing immediately.
5. Use extension cords and receptacles as specified by the manufacturer for all units with electric drive motors or electric starting motors.
6. Adjust the auger housing height to clear gravel or crushed rock surface.
7. Never attempt to make any adjustments while the engine (motor) is running (except when specifically recommended by the manufacturer).
8. Always wear safety glasses or eye shields during operation or while performing an adjustment or repair to protect from foreign objects that may be thrown from the machine.

Personal protective equipment

Always use the correct personal protective equipment when you operate the product.This includes,at minimum,sturdy footwear,eye protection and hearing protection.Personal protective equipment does not erase the risk of injury but may decrease the grade of injury if an accident occurs.
1.Always wear safety glasses or eye protection while you operate the product or do maintenance or repairs.
2.Always wear appropriate winter garments when you operate the product.
3.Always use heavy-duty slip-resistant boots with good ankle support while you operate the product.

4.Do not wear loose fittng clothing that can get caught in moving parts.
5.Use approved protective gloves,if necessary. For example,when attaching,examining or cleaning the blade.
6.Always use approved ear protection while you operate the product. Noise for a long period can cause noise-induced hearing loss.

Safety devices on the product

1.Make sure that you regularly do the maintenance to the product.
a.The life of the product increases.
b.The risk of accidents decreases.
Let an approved dealer or an approved service center regularly examine the product to do adjustments or repairs.
2.Do not use a product with damaged protective equipment.If the product is damaged,speak to an approved service center.

Muffler safety

The muffler keeps the noise levels to a minimum and sends the exhaust fumes away from the operator.Do not use the product if the muffler is missing or defective.A defective muffler increases the noise level and the risk of fire.Examine the muffler regularly to make sure that it is attached correctly and not damaged.

⚠ ATTENTION:
The muffler becomes very hot during and after use and when the engine operates at idle speed. Be careful near flammable materials to prevent fire.

Fuel safety

⚠ WARNING:
Read the warning instructions that follow before you use the product.

1.Do not start the product if there is fuel or engine oil on the product. Remove the unwanted fuel and let the product dry.
2. If you spill fuel on your clothing,change clothing immediately.
3. Do not get fuel on your body,it can cause injury.If you get fuel on your body,use soap and water to remove the fuel.
4. Do not start the product if the engine has a leak.Examine the engine for leaks regularly.
5. Be careful with fuel. Fuel is flammable and the fumes are explosive and can cause injuries or death.
6. Do not breathe in the fuel fumes,it can cause injury. Make sure that there is a sufficient airflow.
7. Do not smoke near the fuel or the engine.
8. Do not put warm objects near the fuel or the engine.
9. Do not add the fuel when the engine is on.
10. Make sure that the engine is cool before you refuel.
11. Before you refuel,open the fuel tank cap slowly and release the pressure carefully.

12. Do not add fuel to the engine in an indoor area.Not sufficient airflow can cause injury or death because of asphyxiation or carbon monoxide.
13. Tighten the fuel tank cap fully.If the fuel tank cap is not tightened,there is a risk of fire.
14. Move the product a minimum of 3m (10ft) from the position where you filled the tank before a start.
15. Do not put too much fuel in the fuel tank.

Safety instructions for maintenance

⚠ WARNING:

Read the warning instructions that follow before you use the product.

1.The exhaust fumes from the engine contain carbon monoxide,an odorless, poisonous and very dangerous gas. Do not start the engine indoors or inclosed spaces.
2.Before you do the maintenance on the product, stop the engine and remove the ignition cable from the spark plug.
3.Use protective gloves when you do maintenance on the blades.The blades are very sharp and cuts can easily occur.
4.Accessories and changes to the product that are not approved by the manufacturer,can cause serious injury or death.Do not change the product. Always use accessories that are approved by the manufacturer.
5.If the maintenance is not done correctly and regularly,the risk of injury and damage to the product increases.
6.Only do the maintenance as given in this operator's manual.All other servicing must be done by an approved service agent.
7.Let an approved service agent do servicing on the product regularly. Replace damaged,worn or broken parts.

KNOW YOUR SNOW BLOWER

Tool Purpose

Snow blowers allow you to clear snow quickly and efficiently.Refer to the following diagrams to become familiarized with all the parts and controls of your snow blower.The components will be referred to later in the manual for assembly and operation instructions.

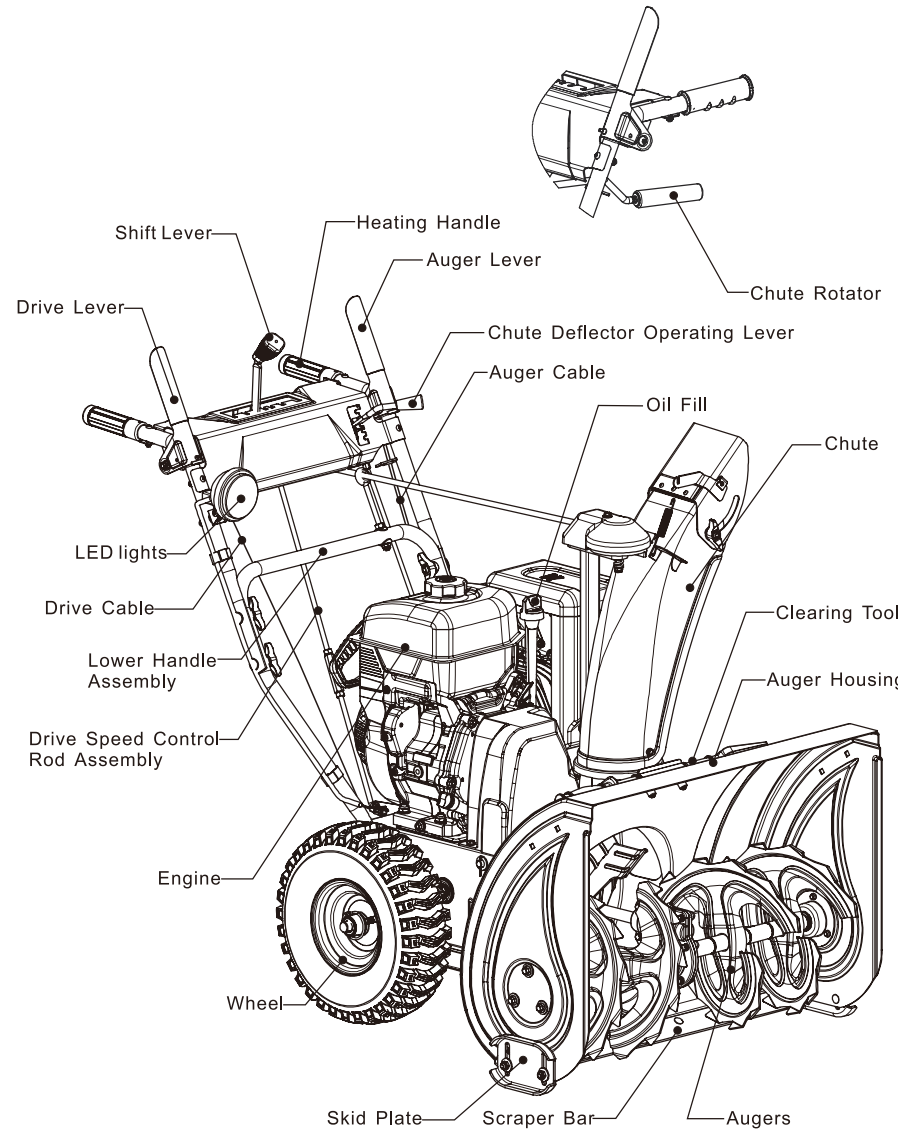

PACKING LIST

Pre-Assembled

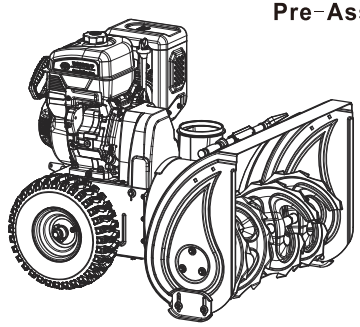

Snow Blower×1

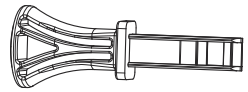

Engine Key×1

Operation Components

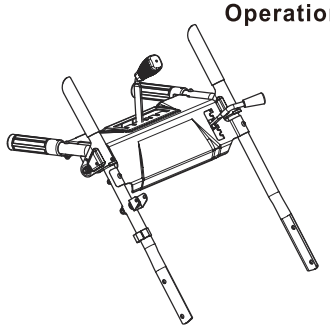

Upper Handle Assembly×1

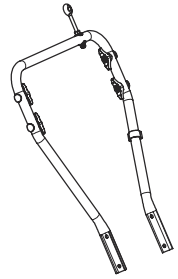

Lower Handle Assembly×1

Chute Components

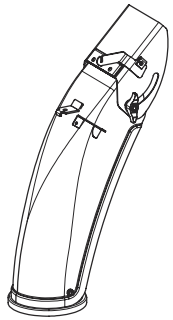

Chute Deflector×1



Chute Spring×1

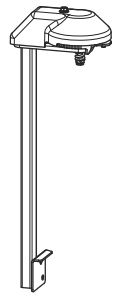

Strengthen Bracket×1

Chute Rotator Components

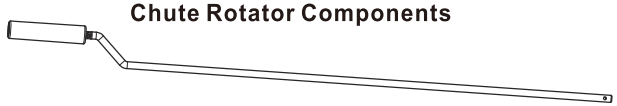

Chute Rotator×1

Drive Speed Control Rod Components

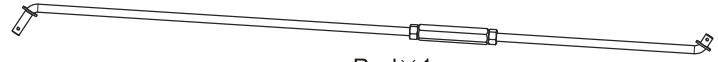

Rod×1



8mm Washer×2



Flat Cotter Pin×2



Spring×1

Skid Plates Components

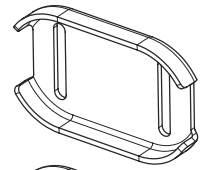

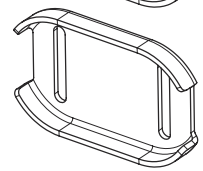

Skid Plates×2

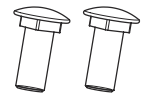

M8×20 Bolt×2

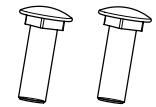

M8×25 Bolt×2

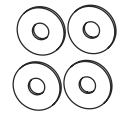

Large Washer×4

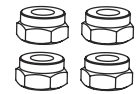

Lock Nut×4

LED Lights Components

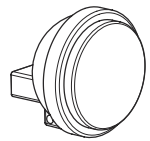

LED Lights×1



M6×40 Screw×1



M6 Locking Nut×1

Spare Parts

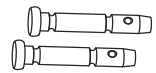

Shear Pin×2

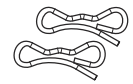

Bowtie Clip×2



Flat Cotter Pin×2

Tools

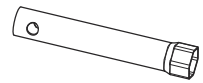

Spark Plug Wrench×1



Spark Plug Wrench Handle×1

ASSEMBLY

⚠ WARNING:
Do not plug in or turn on the tool until it is fully assembled according to the instructions.Read through and become familiarized with the following procedures of handing and adjusting your tool.Failure to follow the safety instructions may result in serious personal injury.

To install the handles

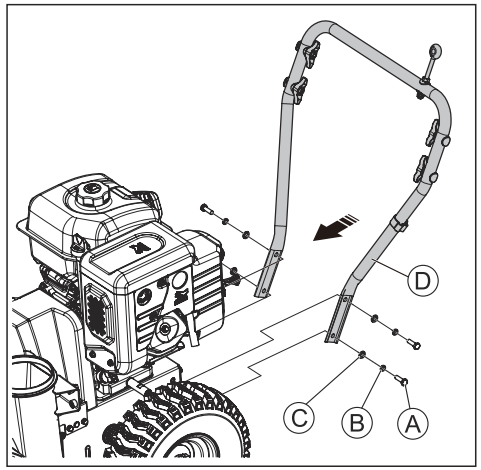

1.Remove the four M8×25 flange bolts(A) from the case.
2.Use the four M8x25 flange bolts (A),the four spring spacers (B) and the four flat spacers (C).
3.Install the lower handle (D) into the two holes on each side of the case.

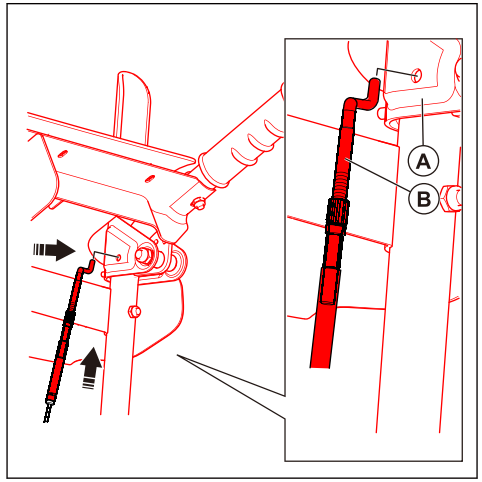

4.Insert the top of the driver cable screw bolt (B) to the holes on the right handle (A).

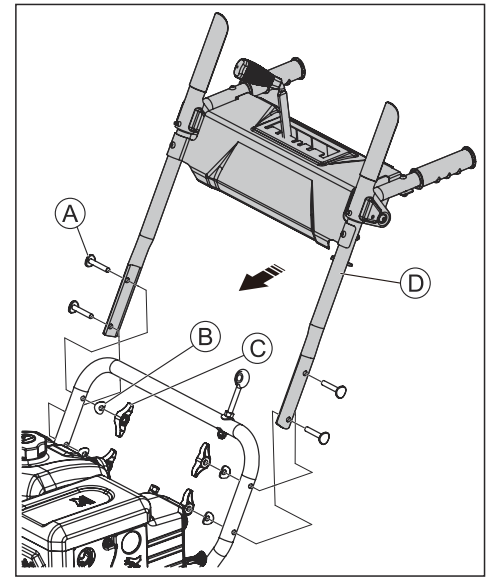

⚠ ATTENTION:
To install the upper handle onto the lower handle,you will need to used the pre-installed knobs on the lower handle.

5.Use the four M8x50 handle lock bolts(A),the four spacers (B),the four handle knobs (C).
6.Install the upper handle (D) with the contronl panel on the lower handle.

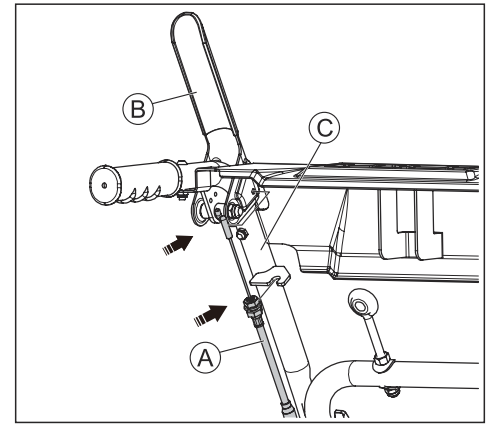

7.insert the top of the auger cable (A) into the hole of left handle (B).
8.install threads part of the drive cable (A) on the panel of left handle (C).
9.lock it with nuts.

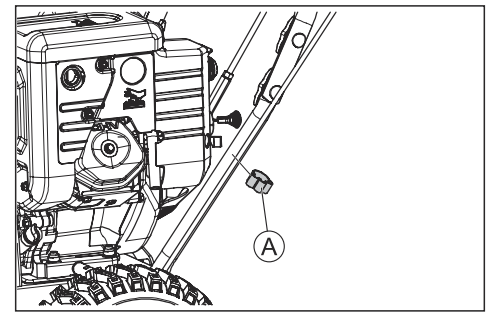

10.use the hoop (A) to lock the cable on the left handle.

To assemble the chute deflector

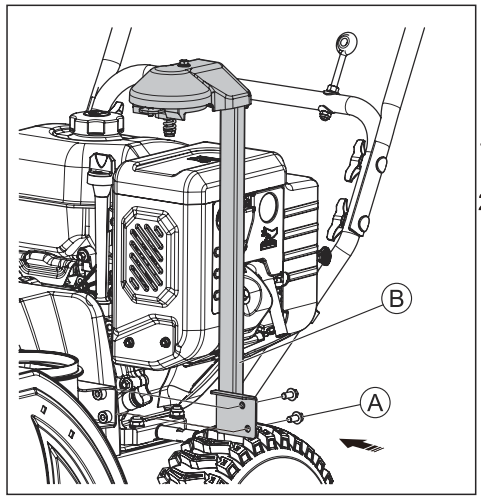

1.remove the two M8×16 hexagon flange bolts (A) from the machine.
2.use the two M8×16 hexagon flange bolts (A) install the strengthen bracket (B) on the auger housing.

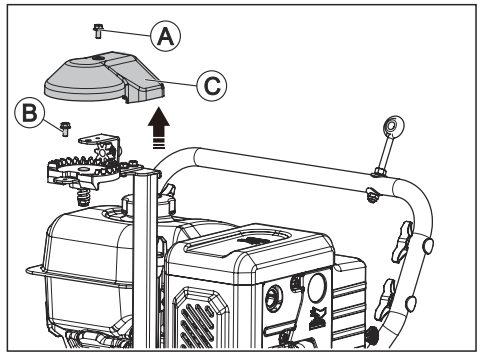

3.remove the decorative cover (C) , the one M6×12 hexagon flange bolts (A) , the one M8×16 hexagon flange bolts (B) from the strengthen bracket.

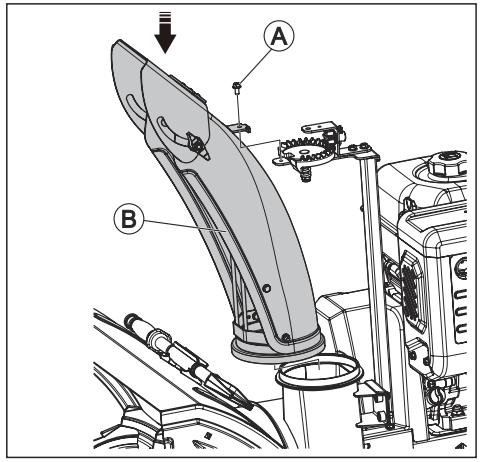

4.install the chute deflector on machine.
5.use the one M8×16 hexagon flange bolt (A) to lock the chute deflector.

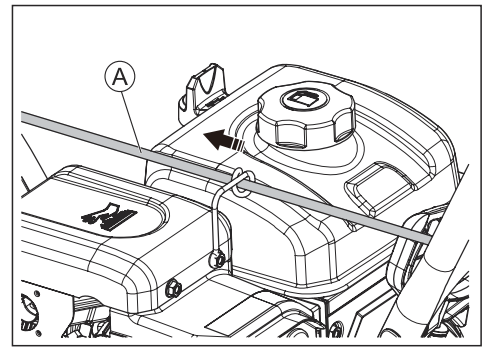

6. Thread the snow cap adjustment cable (A) into the cable seat

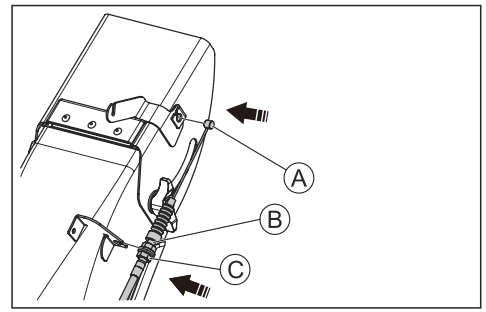

7.Insert the top cylinder (A) of the cable into the hole.
8.Put the cable screw (B) into the slot and tighten the nut M8 (C).

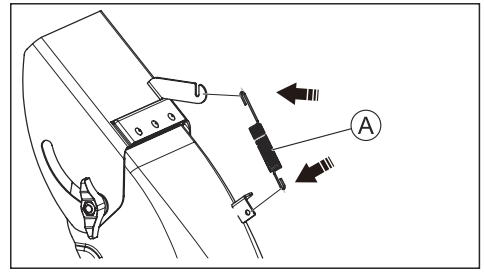

9.Install the long end of the snow outlet extension spring (A) into the upper slot,and the short end into the lower hole.

To assemble the chute rotator

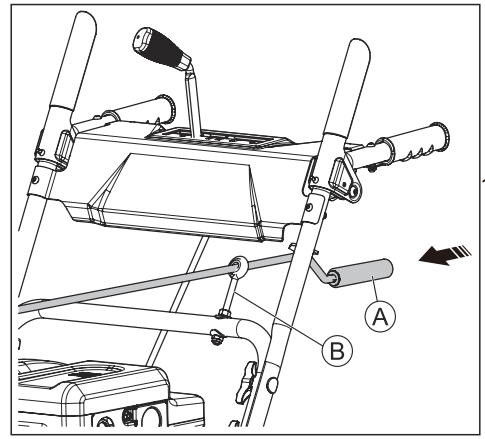

1.insert the chute rotator (A) through the rubber bushing of the fixed rod (B)

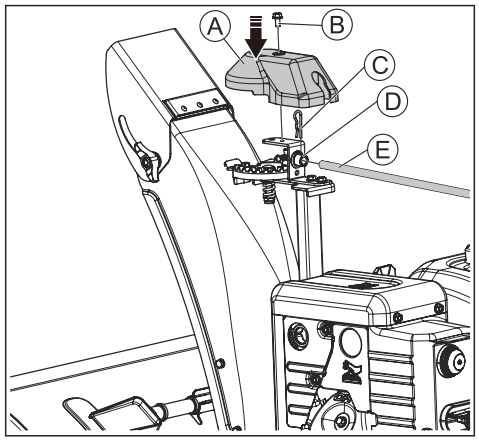

2.install the chute rotator (E) into the hole of steering gear (D), and insert the pin(C)
3.install the decorate cover (A) and lock it by use the one M6×12 hexagon flange bolt (B).

To assemble the drive speed control rod

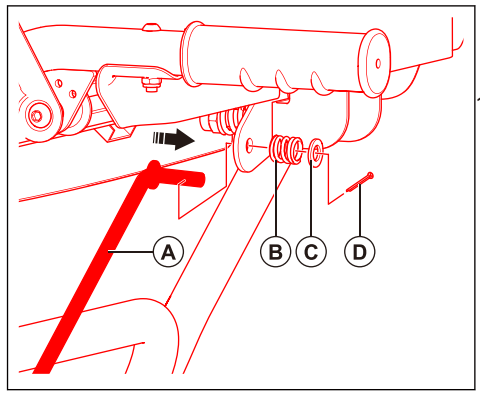

1. Install the long bent end of the drive speed control rod (A) to the control panel,and attach it with one connecting rod spring (B), one flat spacer (C) and one cotter pin (D).

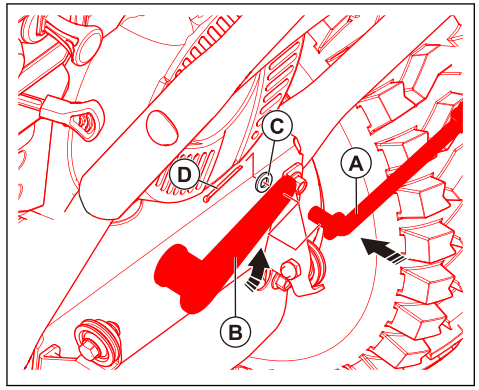

2. Pull up the shift connecting plate (B) and install the short bent end of the drive speed control rod (A).Attach the drive speed control rod (A) with one flat spacer (C) and one cotter pin (D).

To assemble the LED Lights

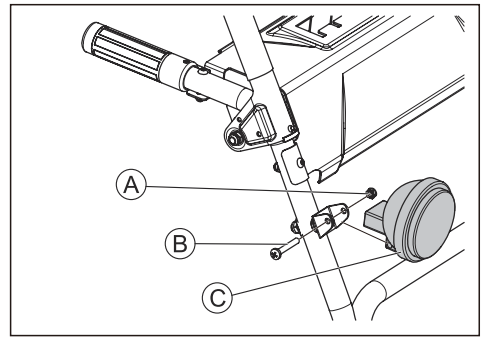

1. Use a M6×40 pan head screw and a lock nut M6.
2. Install the LED light on the armrest bracket.

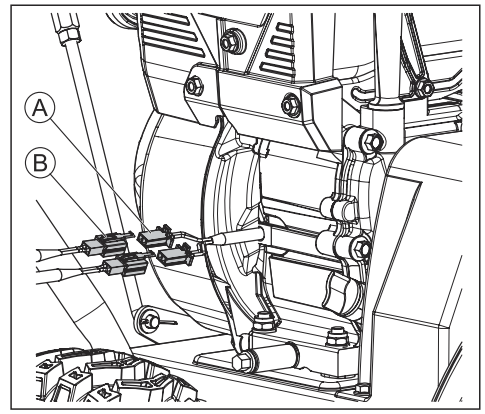

3. Connect the LED light and heating handle cable plug（B）to the engine output cable plug（A）.

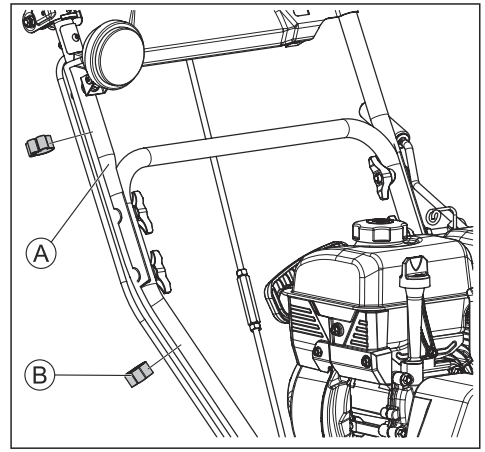

4.Use the hoop (B) to fix the LED light and the heating handle cable to the armrest assembly（A）.

To assemble the skid plates

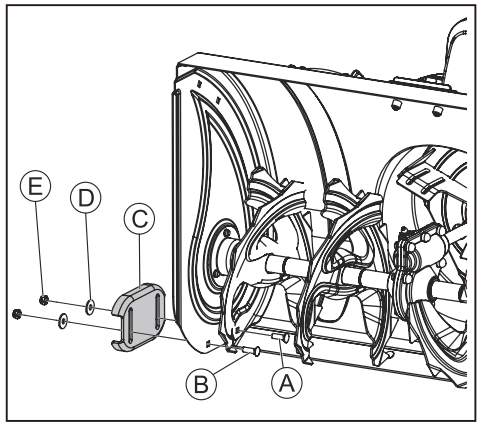

1.Remove the two M8×25 bolt (A), the two M8×20 bolt (B) ,the four large washer (D),the four lock nut (E) from the skid plates components.
2.Use these parts to install the slide plate (C) into the two holes on both sides of the auger housing.

Operation

Before you start the product
1. Keep persons and animals away from the work area.
2. Do daily maintenance. See Maintenance schedule on page 28.
3. Make sure the ignition lead fits correctly on the spark plug.
4. Add oil or gasoline, if necessary. See Technical data on page 34.

To fill the engine with oil

⚠ATTENTION:
Do not rotate the dipstick when you check the oil. Do not fill above the mark.

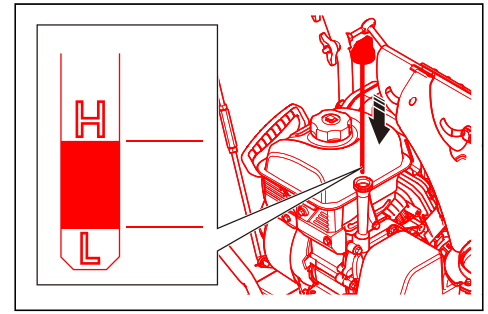

1. Remove the oil cap and clean the dipstick.
2. Add oil to the top mark on the dipstick. Use the dipstick to examine the oil level at regular intervals.
3.Put the oil cap back.

To fill fuel

If available, use low-emission/alkylate gasoline. If low-emission/alkylate gasoline is not available, use good quality unleaded gasoline or leaded gasoline. Use gasoline with an octane number of 90 RON or higher, and with a maximum of 10% ethanol (E10).

⚠ATTENTION:
Do not use gasoline with an octane number less than 90 RON.This can cause damage to the product.

1.Open the fuel tank cap slowly to release the pressure.
2.Fill slowly with a fuel can. If you spill fuel, remove it with a cloth and let remaining fuel dry off.
3.Clean the area around the fuel tank cap.
4.Tighten the fuel tank cap fully. If the fuel tank cap is not tightened, there is a risk of fire.
5.Move the product a minimum of 3 m (10 ft) from the position where you filled the tank, before a start.

To adjust the chute deflector

The direction in which snow is to be thrown is controlled by the chute rotator control which is installed on the left side handle.

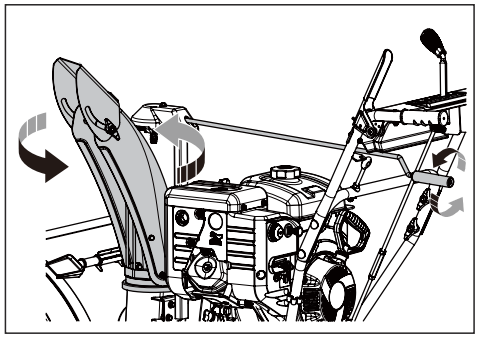

1.Rotate the chute rotator control to set the rotating direction of throwing snow.
2.Rotate the chute rotator control clockwise to throw snow rightwards.
3.Rotate the chute rotator control counter-clockwise to throw snow leftwards.

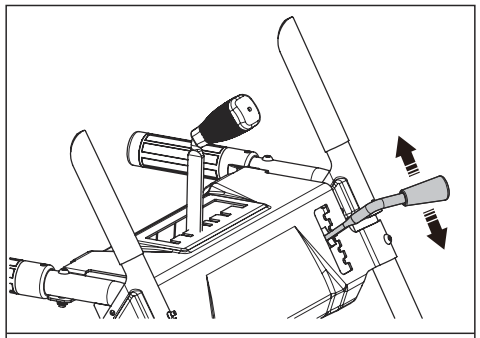

4.Move the angle deflector up or down to adjust the throwing distance of the snow.

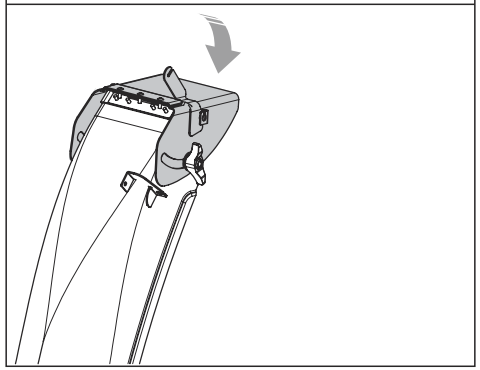

To start the engine

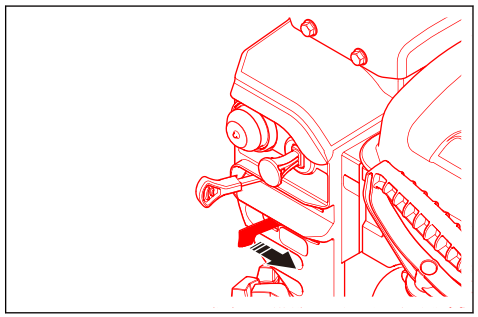

1.Release the drive engagement. Put the drive speed control lever in the first position.
2.Turn the fuel switch to the ON position.

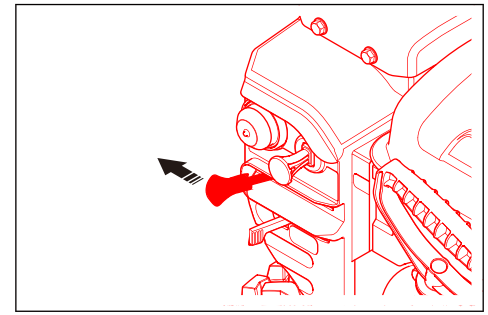

3.Turn the choke to the CLOSE position.

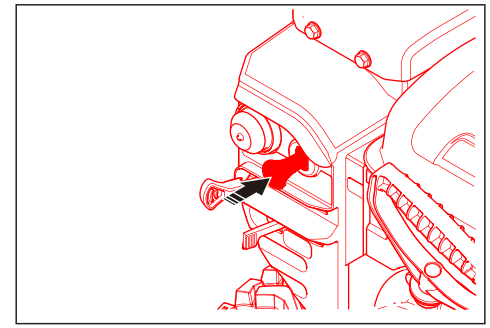

4.Push in the engine key to the RUN position.

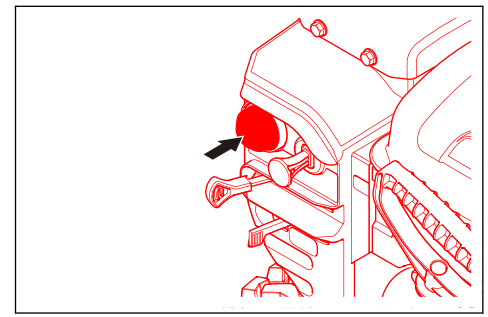

5.Push the primer 1-3 times to start the booster pump. Use the booster pump for cold start in low temperatures.

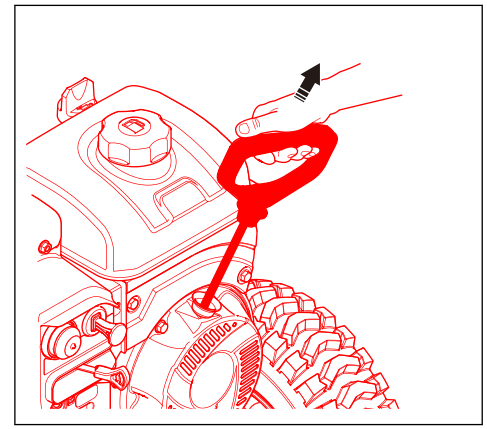

⚠ATTENTION:
Do not release the recoil start handle quickly. Move it back to the start position slowly.

6.Pull the recoil start handle.If the recoil start handle has frozen, slowly pull out as much rope out of the starter as possible and release the recoil start handle. If the engine does not start, repeat the procedure or use the electrical starter.

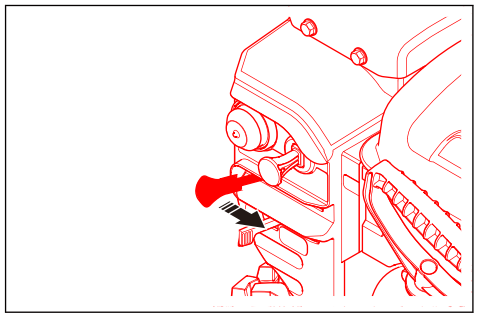

7.Run the engine 30-40 seconds at idling speed before you start to throw snow.
8.When the engine is warm, slowly move the choke to the OPEN position.

To start the engine, electric start(if equipped)

⚠ WARNING:

The product has a 120 Volt A.C. or 230 Volt A.C. electric starter. Ensure that your house is a three-wire grounded system which meet the nameplate. If you are uncertain,consult a licensed electrician.

⚠ ATTENTION:

Use an extension cord that is recommended for outdoor use, and that is not longer than 50 feet (15 m).

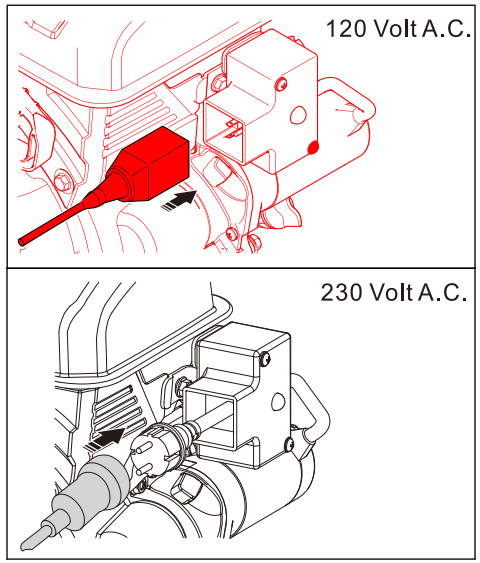

1.Perform 1-5 actions in "to start the engine".
2. Connect the product to power.

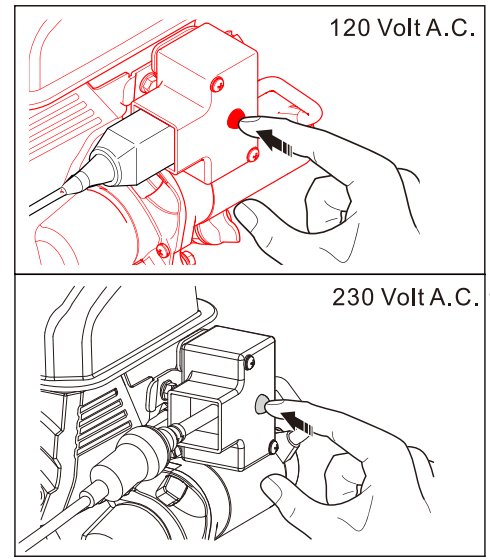

3. Press and hold the start button on the control box for 5 seconds.
4. If the engine does not start, wait 5 seconds, then push the start button again.

⚠ ATTENTION:

Do not try to start the engine more than 10 times. After 10 times, wait 40 minutes before you try again.

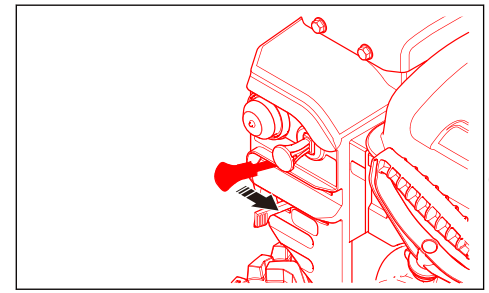

5.Run the engine 30-40 seconds at idling speed before you start to throw snow.
6.When the engine is warm, slowly move the choke to the OPEN position.

To operate the product

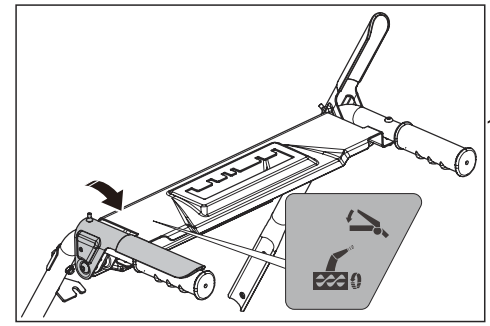

1.Squeeze the auger engagement to the handle to engage the auger and throw snow.

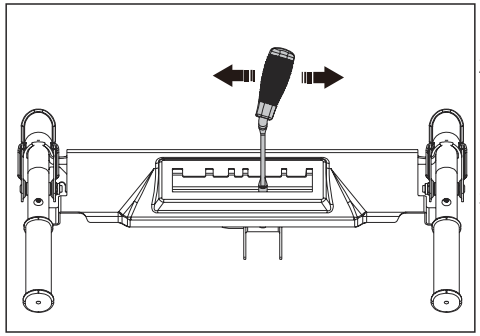

2.Move the drive speed control lever to the left to operate the product forward. Move the drive speed control lever to the right to operate the product rearward.
3. The product with 6 drive speeds has 4 forward speeds and 2 reverse speed.

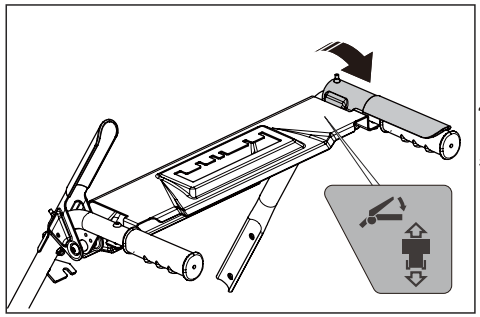

4.Operate the drive engagement with the right handle.
5.Squeeze the drive engagement to the handle to engage the drive wheels. The product moves forward or reverse depending on the location of the drive speed control lever.

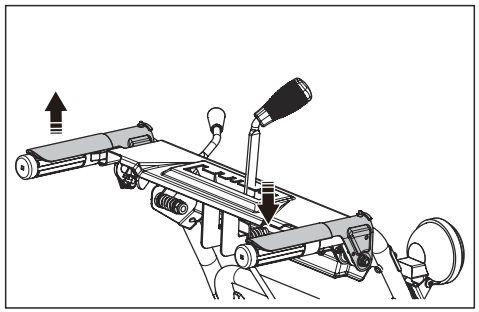

6. After pressing the left and right handles, the clutch handles of the stirring cage can be released, and the whole machine can walk and clear snow at the same time.

To operate the heating handle

ATTENTION:
When the engine is working, the heating handle can be used normally.

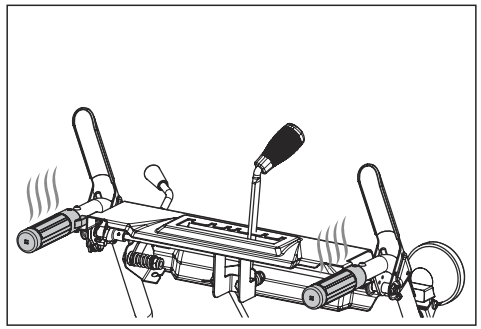

1. After starting the engine, the heating handle immediately starts to work.

To operate LED lights

ATTENTION:
When the engine is working, the LED light can be used normally.

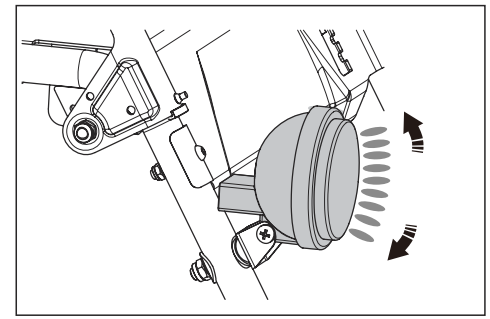

1. Turn the LED light to adjust the irradiation position up and down. After the engine starts, press the "—" icon key to light up the lamp, and press the "○" icon key to turn off the lamp.

To stop the product

ATTENTION:
To turn the engine off in an emergency, pull out the on/off key.

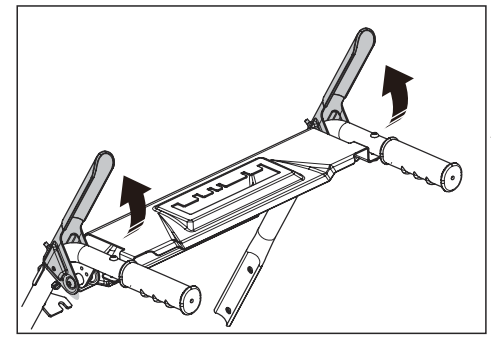

1.Release the drive engagement to stop the drive wheels.
2.Release the auger engagement to disengage the auger and stop throwing snow.

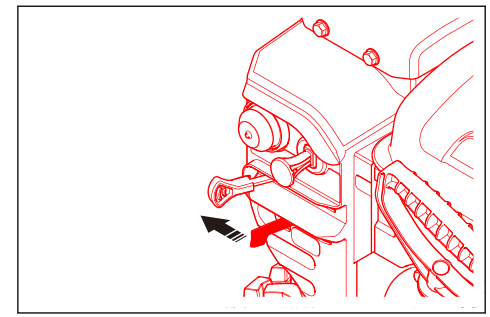

3.Turn the fuel switch to the OFF position.

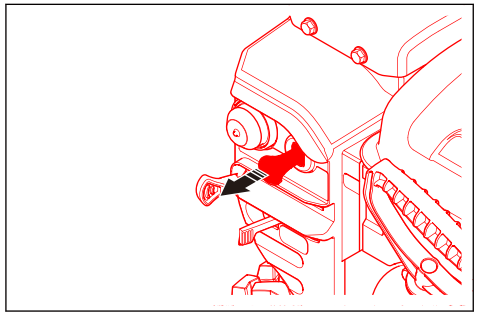

4.Turn off the on/off key. or Pull out the on/off key.

To get a good result

1.Always run the engine at full throttle or close to full throttle.
2.Always adapt the speed of the product to the snow situation and adjust the speed with the drive speed control lever. Make sure that the product throws snow evenly.
3.It is easier and more efficient to remove snow immediately after it falls.
4.Always throw snow downwind whenever possible.
5.On flat surfaces, like asphalt roads, raise the scraper bar up to 5-6 mm (0.2-0.25 in) from the ground.
6.On uneven surfaces, like gravel roads, raise the scraper bar slightly above the top of the gravel. Make sure that the gravel and stones do not enter into the product. It will cause personal injuries if those foreign objects are ejected at high speed.
7.Do not dispatch the chute deflector if it is clogged.
8.If the product does not move forward due to unforeseen circumstances, release the drive engagement immediately or pull out the on/off key to OFF position.

Maintenance

Maintenance schedule

Maintenace	Daily	20 hours	50 hours	100 hours	150 hours
Make sure that nuts and screws are tightened	×				
Do a check of the engine oil level	×				
Replace oil[1]		×	×	×	
Make sure there are no fuel or oil leaks	×				
Remove clogging,foreign objects in auger	×				
Inspect the tire pressure[2]			×		
Inspect and change the spark plug[3]				×	

1.Replace the oil after the first 20 h, 50 h, 100 h and then every 100 h.
2.See Technical data on page 34 for correct tire pressure.

To do a general inspection

Make sure that the nuts and screws on the product are tightened.

To do a check of the oil level

⚠ATTENTION:

A too low oil level can do damage to the engine. Do a check of the oil level before you start the product.

1.Put the product on level ground.
2.Remove the oil tank cap with the attached dipstick.
3.Clean the oil from the dipstick.

4. Put the dipstick fully into the oil tank to give a correct picture of the oil level.
5. Remove the dipstick.
6. Examine the oil level on the dipstick.
7. If the oil level is low, fill with engine oil and do a check of the oil level again.

To replace the engine oil

⚠ ATTENTION:
The engine oil is hot. Avoid skin contact with the used engine oil.

1. Run the engine a few minutes to make the oil warm. Warm oil flows better and carries more contaminants.
2. Put the product on level ground.
3. Run the engine until all fuel has been depleted.
4. Remove the ignition key.
5. Put a container under the oil drain plug.
6. Remove the oil drain plug, tip the product backwards and drain the used oil in the container.

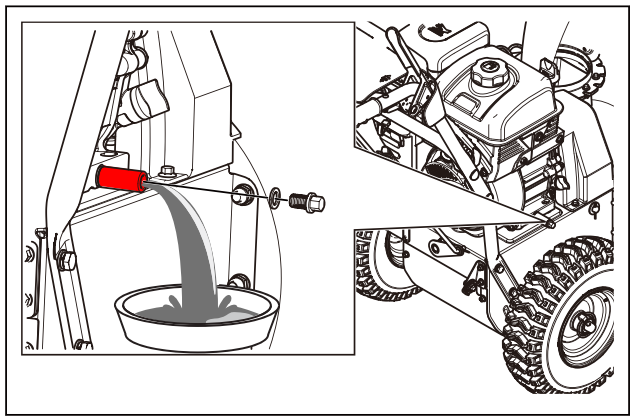

7. Put the product back to the operating position.
8. Fit the oil drain plug and tighten it securely by hand.
9. Fill the engine with oil, see To fill the engine with oil on page 20.

To examine the spark plug

⚠ ATTENTION:
Always use the recommended spark plug type. Incorrect spark plug type can cause damage to the product.

1. Examine the spark plug if the engine is low on power, is not easy to start or does not operate correctly at idle speed.
2. To decrease the risk of unwanted material on the spark plug electrodes, obey these instructions:
   a. Make sure that the idle speed is correctly adjusted.
   b. Make sure that the fuel mixture is correct.
   c. Make sure that the air filter is clean.
3. If the spark plug is dirty, clean it and make sure that the electrode gap is correct, see Technical data on page 34.

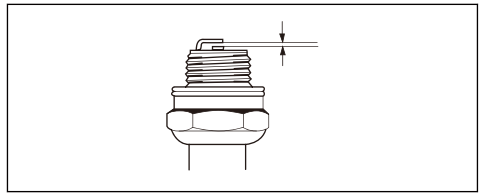

4. Replace the spark plug if it is necessary.
5. Check and clean spark plug before use each year.

To inspect the augers and the scraper bar

1. Before each use, inspect the augers and the scraper bar for wear.
2. If the edges of the augers or the scraper bar are worn, contact an authorized service center to replace them.

To adjust the skid plates

No adjustment is required for normal installation.
1. When the lock nut (B) is loose or the skid plate (A) is not high enough from the ground, unclock the lock nut (B).
2. On flat surfaces, like asphalt roads, make the clearance 5-6mm (0.2-0.25 in) higher between the skid plates (A) and the ground with a 13 mm open-ended wrench. On uneven surfaces, like gravel roads, raise the scraper bar slightly above the top of the gravel. Make sure that the gravel and stones do not enter into the product. It will cause personal injuries if those foreign objects are ejected at high speed.
3. Fasten the lock nut (B).

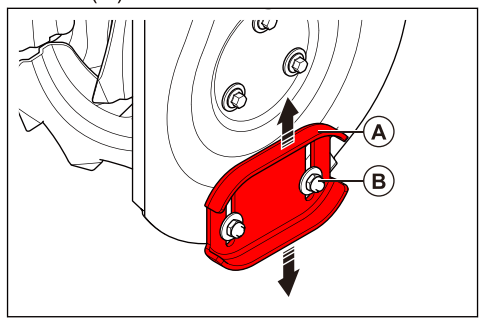

To replace the shear pin

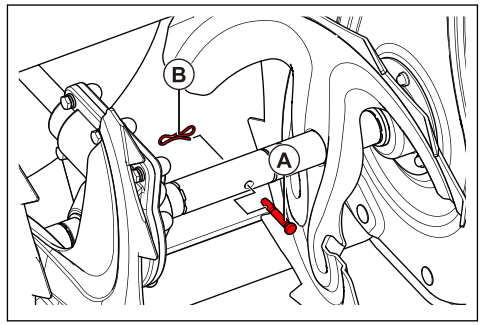

The shear pin protects the product from damage. It breaks if a foreign object enters the moving parts.
1. If the shear pin breaks, stop the engine.
2. Attach a new shear pin (A) and a new clamp spring (B).

To examine the tires

1. Keep the tires free of fuel, oil and chemicals to prevent damage to the rubber.
2. Keep the tires away from stumps, stones, ruts, sharp objects and other objects which can cause damage to the tires.
3. Keep the tire pressure correct, see Technical data on page 34.

To clear a clogged chute deflector

Do not unclog the chute deflector if it is clogged before the following operations are made.

1. Release the auger engagement and the drive engagement at the same time.
2. Wait 10 seconds to make sure that the augers have stopped.
3. Use the included clean-out tool to remove the clog.

⚠ WARNING:

Do not put your hands into the chute deflector or inside the auger housing.

To clean the product

1. Clean plastic parts with a clean and dry cloth.
2. Do not use a high pressure washer to clean the product.
3. Do not flush water directly on the motor.
4. Use a brush to remove leaves, grass and dirt.

Troubleshooting

Problem	Possible cause	Solution
The product does not start	The safety ignition key is not inserted.	Insert the safety ignition key.
	The product is out of fuel.	Fill the fuel tank with fresh, clean gasoline.
	The on/off key is OFF.	Move the on/off key to ON position.
	The choke is in OFF (CLOSE) position.	Move the choke to ON (FULL,OPEN) position.
	The primer is not depressed.	Press the primer.
	The engine is flooded.	Wait a few minutes before restarting,DO NOT prime.
		Restart the engine while full throttle and the choke in OFF (CLOSE) position.
	The spark plug wire is not connected.	Connect the wire to the spark plug.
	The spark plug is bad.	Replace the spark plug.
	There is water in the fuel or the fuel is too old.	Empty the fuel tank and carburetor.Fill the fuel tank with fresh, clean gasoline.
	There is vapor locked in the fuel line.	Make sure that all the fuel line is below the outlet of the fuel tank. The fuel line should run continuously down from fuel tank to carburetor.
The product does not start	Other causes.	Inspect the starting procedures carefully in this manual.
	The fuel switch (if so equipped) is in CLOSE (OFF) position.	Turn the fuel switch to OPEN(ON) position.
	The throttle is in STOP position.	Move the throttle to FAST position.
Decreased power	The spark plug wire is not connected.	Connect the wire to the spark plug.
	The product throws too much snow.	Decrease the speed and the width of the swath.
	The fuel tank cap is covered with ice or snow.	Remove the ice and the snow on and around the fuel tank cap.
	The muffler is dirty or clogged.	Clean or replace the muffler.
	Improper cable length.	Adjust the cable.
	The muffler is blocked.	Make sure that the engine is cool. Clear the blockage.
	The air intake of the carburetor is blocked.	Make sure that the engine is cool. Clear the blockage.
The engine idles or runs roughly	The choke is in ON (FULL, OPEN) position.	Move the choke to OFF (CLOSE) position.
	The fuel line is blocked.	Clean the fuel line.
	There is water in the fuel or the fuel is too old.	Empty the fuel tank and carburetor.
		Fill the fuel tank with fresh, clean gasoline.
	The carburetor needs to be replaced.	Contact an authorized service center.
	The belt is stretched.	Replace the auger v-belt.
Excessive vibration / Handle movement	Some parts are loose. The augers are damaged.	Tighten all fasteners. Replace the damaged parts. If vibration remains, contact an authorized service center.
	The handles are not positioned correctly.	Make sure that the handles are locked into position.
	The adjustment lever nuts are loose.	Tighten the nuts until the handle feels safe.
The recoil start handle is hard to pull	The recoil start handle is frozen.	Slowly pull out as much rope out of the starter as possible and release the recoil start handle. If the engine does not start, repeat the procedure or use the electrical
	The rope is interfering with components.	The recoil rope should not touch any wires or hoses.
Loss of traction drive/ slowing of drive speed **Loss of snow discharge or slowing of snow discharge**	The belt slips.	Adjust the cable. Adjust the belt.
	The belt is worn.	Check / replace the belt.
	The belt is off the pulley.	Check / reinstall the belt.

Problem	Possible cause	Solution
Loss of traction drive/ slowing of drive speed Loss of snow discharge or slowing of snow discharge	The chute deflector is clogged.	Clean the chute deflector.
	Foreign objects clog the augers.	Remove the debris or the foreign object from the augers.
	The shear pin is broken.	Replace the broken shear pin.
	Excessive snow and ice build up in betweentrack components track components.	Remove snow and ice build up from in between track components.
	The friction drive wheel is worn.	Contact an authorized service center.
Failure of auger rotation after the grip is released	The drive belt is not aligned.	Adjust the drive belt.
	The discharge deflector is not aligned.	Adjust the discharge deflector.
The lights are not on (if so equipped)	The engine is not running.	Start the engine.
	The wire connection is loose.	Check the wire connections at the engine and the lights.
	The LED is burnt out.	Replace the LED light module. Individual LEDs can not be replaced.
The chute rotator is difficult to move	There is debris in the chute rotator mechanism.	Clean the internal parts of the chute rotator mechanism.
	The cables are kinked or damaged.	Make sure that the cables are not kinked. Replace the cables that are damaged.
The product turns to one side	The tire pressure is not equal.	Adjust the tire pressure and fill the tire.
	The product drives with only one wheel.	Inspect the tire lock pin.
	Uneven sled adjustment.	Adjust the skid plates and the sledge.
	Uneven skid plates adjustment.	Adjust the skid plates and the sledge.

Transportation,storage and disposal

Transportation and storage

1. For storage and transportation of the product and fuel, make sure that there are no leaks or fumes. Sparks or open flames, for example from electrical devices or boilers, can start a fire.
2. Always use approved containers for storage and transportation of fuel.
3. Empty the fuel tank before you put the product in storage for a long period of time. Discard the fuel at an applicable disposal location.
4. Safely attach the product during transportation to prevent damage and accidents.
5. Keep the product in a locked area to prevent access for children or persons that are not approved.
6. Keep the product in a dry and frost free area.

Disposal

1. Obey the local recycling requirements and applicable regulations.
2. Discard all chemicals, such as engine oil or fuel, at a service center or at an applicable disposal location.
3. When the product is no longer in use, discard it at a recycling location.

Technical data

Product specifications	
Gasoline capacity and type	4.5L(1.19 U.S.Gal)Unleaded regular (maximum 10% ethanol)
Oil type (API SJ-SN)	SAE 30 (above 0°C (32°F) SAE 10W30 (above 0°C (32°F) SAE 5W30 (below 0°C (32°F)
Oil capacity	0.95 L (37 oz)
Spark plug	F7RTC or equivalent spark plug
Spark plug electrode gap	0.7-0.8 mm
Tire pressure	138 kPa (20 psi)

AiPower Product Warranty
General Warranty Information

AiPower LLC provides this limited warranty to the Initial Purchaser of new AiPower branded products ("Product"). The "Initial Purchaser" is the first person to purchase the Product from an authorized AiPower retailer, distributor, or dealer ("Retailer"). AiPower makes no other express warranty. The engine manufacturer and/or battery manufacturer may provide separate warranties for their components and provide its/their own special emission system warranty. To ensure warranty coverage, retain your original sales receipt as proof of purchase. The warranty period commences on the date of purchase from an authorized Retailer. This warranty is exclusive to the Initial Purchaser, is non-transferable, and applies only to Products purchased and used within the United States and Puerto Rico. Products purchased or used outside these regions are not covered by this warranty.

Two-Year Limited Warranty – Engine and Gearbox
The (SK28WM) is warranted to be free from manufacturing defects in workmanship or materials for two years from the date of purchase for residential use only ("Warranty Period"). Commercial, rental, or industrial use voids this warranty. During the Warranty Period, AiPower LLC will, at its option, repair or replace any original part determined to be defective in workmanship or material. This warranty does not cover:Accidental damage, misuse, neglect, or normal wear and tear.
• Failure to comply with the Operating, Safety, and Maintenance Instructions provided in the operator's manual.
• Unauthorized service, modifications, or use of non-AiPower parts or accessories.
• Expendable or consumable items requiring replacement as part of normal maintenance, unless defective within the first thirty (30) days of purchase.
All service beyond routine maintenance must be performed by an authorized AiPower service technician. Unauthorized service or alterations to the Product's original configuration will void the warranty.

Exclusions
This limited warranty does not cover:
• Products purchased outside the United States or Puerto Rico.
• Damage due to lack of maintenance or improper maintenance as described in the operator's manual.
• Normal wear and tear resulting from Product use.
• Use of the Product inconsistent with its intended purpose, including abuse, misuse, or neglect, or non-compliance with instructions in the operator's manual.
• Any Product altered or modified in a manner not consistent with its original design or in an unapproved manner.
• Damage resulting from the installation or use of non-OEM parts or accessories.
• Loss of time, loss of use, transportation costs, or other expenses incurred in connection with transporting the Product to and from an authorized service provider.
• Damage to other equipment or personal items.
Warranty Claims and Service Process
To obtain warranty service, contact the AiPower Support Center at 855-888-3598 or support@aipower.com, Monday through Friday, 7:30 AM to 5:30 PM Eastern Time, or visit www.aipower.com. A copy of your original sales receipt is required for warranty service. Follow these steps for service or warranty evaluation:

1.Contact AiPower: Call 855-888-3598 or email support@aipower.com during business hours.
2.Provide Proof of Purchase: Submit the original sales receipt and Product serial number to verify warranty eligibility.
3.Obtain an RGA Number: If service or evaluation is required, AiPower may issue a Return Goods Authorization (RGA) number and provide a list of authorized service centers, if applicable.
4.Shipping Requirements: All shipments to AiPower must include the RGA number clearly marked on the package. Shipments without an RGA number will be refused. Shipping costs are the responsibility of the Initial Purchaser, and AiPower is not liable for packages lost in transit. Use a carrier that provides tracking and delivery confirmation.
5.Service Support: AiPower Support agents will assist with troubleshooting over the phone to resolve issues promptly.

Limitations
1.No Implied Warranties: There are no implied warranties, including but not limited to any implied warranty of merchantability or fitness for a particular purpose. No warranty applies after the applicable Warranty Period. No other express warranty or guaranty, whether written or oral, except as mentioned herein, given by any person or entity, including a Retailer, shall bind AiPower LLC. The exclusive remedy during the Warranty Period is repair or replacement of the defective part. (Some states do not allow limitations on implied warranties, so this limitation may not apply to you.)
2.No Incidental or Consequential Damages: AiPower LLC shall not be liable for incidental or consequential loss or damages, including but not limited to transportation costs, rental expenses, or temporary replacement costs. (Some states do not allow the exclusion of incidental or consequential damages, so this exclusion may not apply to you.)
3.Recovery Limitation: In no event shall recovery of any kind exceed the purchase price of the Product. Alteration of safety features voids this warranty, and the Initial Purchaser assumes all risk and liability for loss, damage, or injury arising from use, misuse, or inability to use the Product.
How State Law Relates to This Warranty
This limited warranty gives you specific legal rights, and you may also have other rights which vary from state to state.
Contact Information
For additional information or questions, contact AiPower at 855-888-3598 or support@aipower.com, Monday through Friday, 7:30 AM to 5:30 PM Eastern Time, or visit www.aipower.com.
Important: Save these instructions for future reference.

A-iPOWER WARRANTY REGISTRATION FORM

Register your product by emailing this form to support@aipower.com or register on-line at: www.aipower.com.

Registering your product is important , it provides the following protections:

1. You have record of product purchased
2. Customer Service can Better serve you for Warranty related issues
3. We can contact you in the unlikely event should notification is necessary

Customer Information:

Name: _____
Phone: _____
E-mail: _____
Address: _____
City, State: _____
Zip code: _____
Purchase Date: _____

Product Information:

Serial #

Model #

The serial No. can be found on the engine.
PLEASE NOTE: Your product cannot be registered without model & serial numbers.

1.THE PRODUCT WAS PURCHASED FOR: A.❑ Residential cleaning
B. ❑ Other _____

2.THIS PRODUCT IS A: (select one)

A.❑ First time purchase B. ❑ Replacement

3.HOW DID YOU FIRST LEARN OF THIS PRODUCT: (select one)

A. ❑ Radio
B. ❑ Store Display
C. ❑ Contractor
D. ❑ Trade Show
G. ❑ Direct Mail
H. ❑ From Friend/Relative/Neighbor
I. ❑ Internet
J. ❑ Other _____

4. PLEASE RATE THE FOLLOWING:	Completly Satisfied 5	4	3	2	Not at all Satisfied 1
Product Value for Price Paid	❑	❑	❑	❑	❑
Performance	❑	❑	❑	❑	❑
Features	❑	❑	❑	❑	❑
Product Appearance	❑	❑	❑	❑	❑
Warranty	❑	❑	❑	❑	❑
Ease of Maintenance	❑	❑	❑	❑	❑
Noise Level	❑	❑	❑	❑	❑

5 . HOW LIKELY ARE YOU TO RECOMMEND A-iPOWER TO FAMILY OR FRIENDS?

Extremely Likely 5	4	3	2	Not Likely at all 1
❑	❑	❑	❑	❑

Privacy Statement: A-ipower is committed to respecting your privacy and to complying with the regulations regarding the protection of personal data. The survey data we collect is for the purposes of marketing or product support and demographic information about the entire audience registering their products.

iPOWER™

Fontana, CA 92337 USA
Phone: 855-888-3598
support@aipower.com
www.aipower.com