SNOWKING®

24” Gas Snow Blower

Operation Manual & Safety Instructions

Model: SK24C

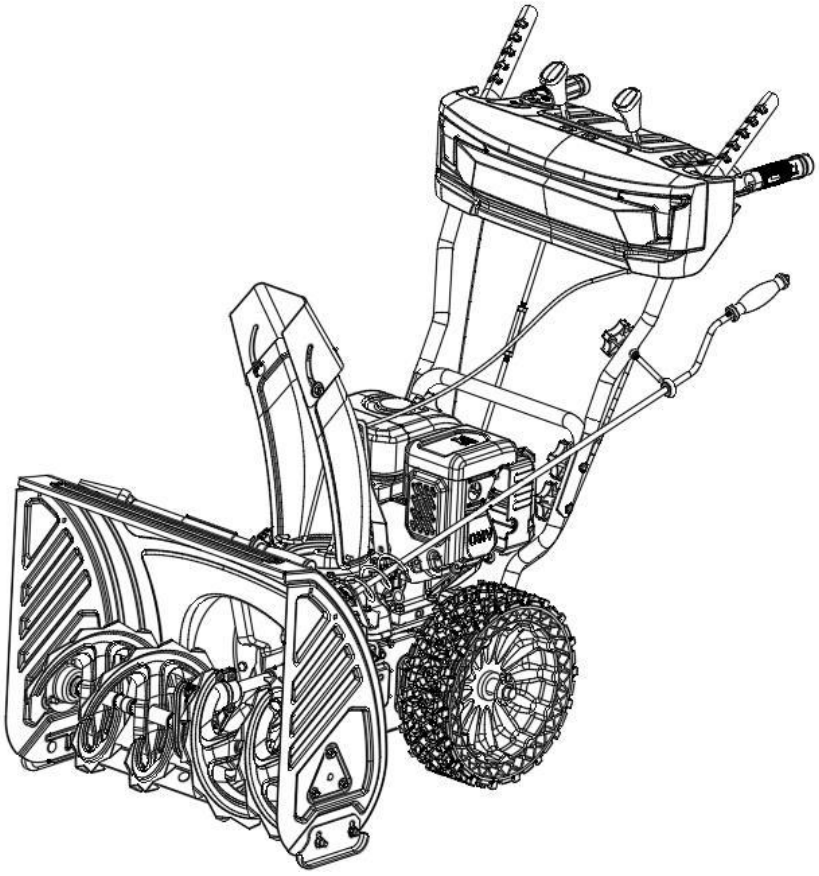

For product, service, or warranty assistance, contact:

www.tecumsehpowerproducts.com | 1-855-888-3598

IMPORTANT — READ BEFORE USE

⚠ WARNING — TO REDUCE THE RISK OF INJURY, READ THE USER MANUAL BEFORE OPERATING THIS PRODUCT.

Read this manual carefully before operating your gas snow blower. Understand all controls, safety requirements, and procedures before starting the machine.

Keep this manual accessible for future reference. When transferring ownership of this unit, always include this manual.

Product appearance may differ slightly from images in this manual. This has no effect on function or safety.

Table of Contents

1. Main Specifications 4
1.1 Technical Specifications 4
1.2 Components Included 4
1.3 Intended Use 4
2. Symbol Explanations 6
3. Parts & Components Identification 8
4. Safety Instructions 10
5. Installation & Assembly 16
5.1 Unpacking 16
5.2 Assembly 16
5.3 Adjustments 20
6. Operation 22
6.1 Fueling 22
6.2 Engine Oil Check 22
6.3 Starting the Engine 23
6.4 Stopping the Engine 24
6.5 Operating Sequence 24
6.6 Tips for Effective Snow Removal 25
7. Periodic Maintenance 27
7.1 Maintenance Schedule 27
7.2 Engine Oil Replacement 27
7.3 Spark Plug Service 28
7.4 Gearbox Lubricant 28
7.5 Cylinder Wall Lubrication 28
7.6 Cleaning, Storage, Transport & Disposal 29
8. Troubleshooting 31
9. Warranty Terms 34

1. Main Specifications

1.1 Technical Specifications

Specification	
Engine Type	4-stroke, single cylinder, air-cooled OHV
Engine Displacement (cc)	212
Engine Power (kW)	4.0
Gasoline Grade (Octane)	92
Engine Oil Grade	SAE 5W-30
Transmission Type	Mechanical
Forward / Reverse Gears	5 Forward / 2 Reverse
Starting Method	Electric Start
Auger Diameter (mm)	250
Engine Oil Capacity (L)	0.6
Average Fuel Consumption (L/h)	0.8
Drive Mode	Self-propelled
Clearing Width (mm)	600
Maximum Clearing Depth (mm)	530
Overall Dimensions L×W×H (mm)	1280 × 620 × 1100
Net Weight (kg)	65

NOTE: Technical specifications and product packaging are subject to change by the manufacturer without prior notice.

1.2 Components Included

- Gas Snow Blower
- Accessory Kit
- Engine Oil
- Operation Manual
- Packaging materials

1.3 Intended Use

This gas snow blower is designed for residential snow removal on driveways, sidewalks, parking areas, and similar open surfaces. It must be operated by a qualified adult at all times.

This snow blower is for household use only, with a maximum of 20 hours of operation per week. After every 15–20 minutes of continuous use, pause for approximately 5 minutes to let the machine cool and to clear any snow accumulation.

⚠ **WARNING:** This snow blower is NOT intended for professional or commercial use.

2. Symbol Explanations

The following symbols appear throughout this manual and on the machine itself. Learn their meanings before operating the snow blower.

Symbol	Meaning
	Read all safety rules and follow all instructions before operating. Failure to comply may result in serious injury or machine damage.
	CAUTION — Important information. This information must be followed.
	BURN RISK — Engine parts, especially the muffler, become extremely hot during operation. Do not touch these parts. Allow the engine to cool completely before performing maintenance.
	Adhere to fire safety procedures when refueling. Do not smoke or allow open flames near fuel.
	Fuel is highly flammable. Never store the snow blower in enclosed spaces containing potential heat sources or open flames.
	Exhaust gases are hazardous to health. Never start the engine indoors or in enclosed spaces. Always operate in well-ventilated, open-air areas.
	Do not attempt to stop moving parts by hand. Wait for all parts to come to a complete stop after shutdown.
	Risk of injury from rotating components. Keep hands and feet clear of all rotating parts during operation, especially when reversing.
	Wear appropriate clothing for weather conditions. Avoid loose or baggy garments that could become entangled in moving parts.
	Wear high-ankle safety boots with sturdy, slip-resistant soles and thick socks to prevent injuries and maintain stable footing.
	Protective gloves are mandatory and must be worn at all times during operation.
	While the average noise level of this snow blower does not pose a long-term health risk, hearing protection is recommended for extended periods of close-proximity operation.
	Risk of injury from high-speed ejected snow and solid debris. Maintain a safe operating distance at all times.
	Bystanders must maintain a minimum safety distance of 10 meters (33 feet) from the machine during operation.

Symbol	Meaning
	Never use your hands to clear snow or debris from the discharge chute. Use only the dedicated clearing tool provided.
	Engage the auger (snow collection) drive clutch lever to begin snow clearing.
	Engage the travel (wheel drive) clutch lever to begin forward or reverse movement.
	Do not attempt to self-repair or modify the snow blower. All service must be performed at an authorized service center.

3. Parts & Components Identification

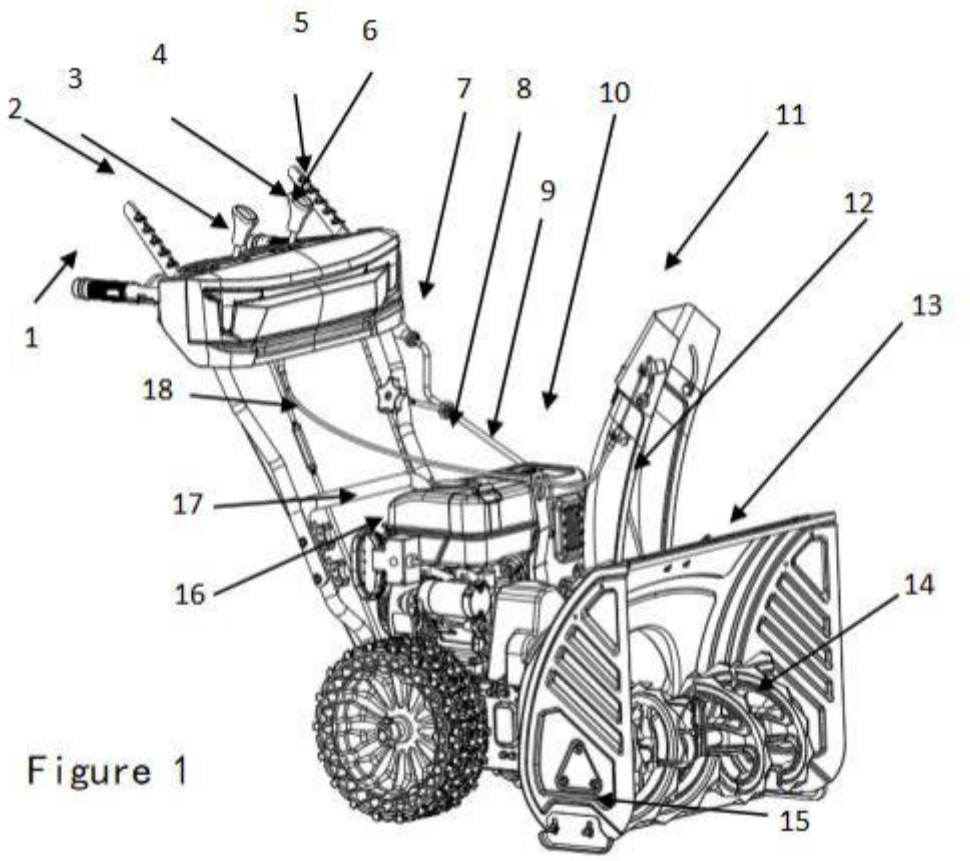

Figure 1

Item #	Component Name	Item #	Component Name
1	Handle Rubber Grip	10	Muffler
2	Travel Clutch Lever	11	Upper Chute Housing
3	Travel Gear Shift Lever	12	Lower Chute Housing
4	Chute Deflector Angle Adjustment Lever	13	Auger Housing
5	Auger Drive Clutch Lever	14	Auger Blade
6	Control Panel Electrical Switch	15	Skid-shoe
7	Chute Rotation Control Lever	16	Electric Start Switch
8	Fuel Tank Cap	17	Recoil (Manual) Start Handle
9	Engine Oil Dipstick	18	Travel Speed Adjustment Lever

NOTE: The actual appearance of your unit may differ slightly from figures shown in this manual. The manufacturer continuously improves its products and reserves the right to revise design and assembly without prior notice.

How It Works

The gasoline engine powers the drive wheels, propelling the machine forward or in reverse. All machine functions are controlled via the clutch levers on the handle frame.

The rotating auger blade (Item 14) collects snow and the impeller directs it through the lower chute housing (Item 12) toward the discharge direction chosen by the operator.

Discharge direction is set using the chute rotation control lever (Item 7). The auger housing (Item 13) captures and channels snow into the working assembly.

Controls Overview

Wheel Drive

- Squeeze the Travel Clutch Lever (Item 2) to engage the drive system and begin moving.
- Release the Travel Clutch Lever (Item 2) to disengage the drive and stop movement.

Auger Operation

- Squeeze the Auger Drive Clutch Lever (Item 5) to begin rotating the auger blade and initiate snow clearing.
- Release the Auger Drive Clutch Lever (Item 5) to stop blade rotation. Allow the blades to stop completely before approaching the machine — never attempt to stop the blades by hand.

Travel Speed

- Always release the Travel Clutch Lever before changing gears.
- Forward speeds 1–5: Slide the Travel Gear Shift Lever (Item 3) forward through positions 1 (slowest) to 5 (fastest).
- Reverse speeds R1–R2: Slide the Travel Gear Shift Lever (Item 3) rearward into the reverse positions.
- Ensure each gear change is fully and securely engaged. Do not leave the shift lever in any position between gear notches.

> ⚠ **WARNING:** Speed changes may only be made after the snow blower has come to a complete stop.

Oil Level Protection

This engine does not have an automatic low-oil shutdown system. It is the operator's responsibility to check the engine oil level before every use and to monitor it during operation. Running the engine with insufficient oil will cause serious, irreversible engine damage.

> ⚠ **CAUTION:** Always check and maintain the correct oil level before starting. Engine damage resulting from low or missing oil is not covered under warranty.

Shear Pin System

The auger blade (Item 14) is secured to the drive shaft by purpose-built shear pins. Each pin has an engineered break point that fractures under excessive load, protecting the auger from structural damage when foreign debris is encountered.

For small to medium obstructions, shear pin breakage will reliably protect the auger. However, striking a large, solid obstruction — such as dense compacted snow or a large ice mass — can physically jam the drive shaft even after pin failure.

> ⚠ **WARNING:** Never substitute standard metal pins or any other fasteners for the dedicated shear pins. Only replacement shear pins of the exact matching specification may be used.

⚠ WARNING

- Do not make any unauthorized changes or modifications to this snow blower. Unapproved alterations are strictly prohibited.
- This snow blower is designed exclusively for snow removal. Do not use it for any other purpose.
- Read this manual thoroughly and make sure you understand all instructions before operating the machine.
- Damage or injury resulting from failure to follow these guidelines will void warranty coverage. The manufacturer is not responsible for loss, damage, or injury caused by misuse of this product.

SAFETY INFORMATION

Safety is critical — for you and for those around you. Important safety information appears throughout this manual and on labels affixed to the machine. Read everything carefully before operating.

Each safety notice in this manual is preceded by one of four signal words — DANGER, WARNING, CAUTION, or NOTICE — indicating the level of risk. Understand what each word means before you begin.

Signal Word Definitions

⚠ **WARNING**	Indicates a hazardous situation which, if not avoided, could result in death or serious injury.
⚠ **CAUTION**	Indicates a hazardous situation which, if not avoided, could result in minor or moderate injury.
NOTICE	Indicates information important but not related to personal injury, such as practices that could result in equipment damage.

DAMAGE PREVENTION

> ***NOTICE:*** Items marked NOTICE highlight conditions that, if not observed, could result in damage to the machine. These are not personal safety warnings — they protect your equipment.

SAFETY PRECAUTION

⚠ 🕮	Operated according to these instructions, this snow blower will perform safely and reliably. Read and understand this entire manual before operating. Failure to do so may result in personal injury or equipment damage.

SAFETY INSTRUCTIONS

- Before using the machine, verify that all components — including the discharge chute assembly — are fully and correctly installed.
- Gasoline is highly flammable and its vapors are explosive. Take every precaution to prevent fire or explosion when handling fuel.
- Use only the fuel and lubricant grades specified in this manual. All fluids must be clean and uncontaminated.
- Set the gear lever to neutral before starting the engine.

- The auger can cause serious injury. Never step on or stand in front of the auger housing when starting the machine.
- Always disengage the clutch and return the gear lever to neutral before shifting gears. Shifting under load can cause injury and transmission damage.
- Never operate the snow blower while fatigued, ill, or under the influence of alcohol or any medication that may impair your judgment or reaction time.
- Use reverse gear with caution. Always watch where you are stepping to avoid tripping or falling.
- Keep all bystanders — especially children and pets — well away from the operating area at all times.

NOTICE: Product photos and illustrations in this manual may differ slightly from the actual machine due to ongoing product improvements.

SAFETY INSTRUCTIONS AND WARNING

General Safety Instructions

1. Use this snow blower only as described in this manual. Incorrect or unintended use can result in serious injury or death.
2. Follow all instructions, safety symbols, and warnings in this manual. Disregarding them can result in injury, equipment damage, or death.
3. Keep this manual for the life of the product. Refer to it for assembly, operation, maintenance, and correct installation of attachments. Use only manufacturer-approved attachments and accessories.
4. Do not operate a damaged product. Follow the maintenance schedule in this manual. Perform only the maintenance tasks described here — all other service must be carried out by an authorized service center.
5. This manual cannot cover every situation you may encounter. Use good judgment. If you are ever unsure about safe operation or maintenance, contact your dealer or an authorized service center before proceeding.
6. Disconnect the spark plug cable before assembling the machine, placing it in storage, or performing any maintenance work.
7. Do not use this product if it has been altered from its original specification. Never modify any component without manufacturer approval, and use only manufacturer-approved replacement parts. Unauthorized modifications can cause injury or death.
8. Never inhale engine exhaust fumes. Long-term exposure to exhaust gases poses a serious risk to your health.
9. Never start the engine indoors or near flammable materials. Exhaust fumes are hot, may contain sparks, and can start fires. In an enclosed space, exhaust fumes can cause asphyxiation or fatal carbon monoxide poisoning.
10. The engine generates an electromagnetic field during operation that may interfere with or damage active medical implants such as pacemakers. If you have a medical implant, consult your physician and the implant manufacturer before operating this product.
11. Never allow children to operate this machine. Do not allow any adult to operate it without first reading this manual and receiving proper instruction.
12. Any person with reduced physical or mental capacity must be directly supervised by a responsible adult whenever they are near or operating this machine.
13. Store the machine in a locked area that children and unauthorized persons cannot access.
14. This machine can eject snow and solid objects at high speed. Follow all safety instructions to reduce the risk of serious injury or death.
15. Never leave the machine unattended while the engine is running.
16. The operator bears full responsibility for any accident or injury that occurs during operation.
17. Before and during any rearward movement, always look behind and down for children, animals, or obstacles that could cause you to trip or fall.
18. Inspect the machine for damage before every use. Never operate it in a damaged or impaired condition.

19. Keep all people and animals at least 15 m (50 ft) away before beginning operation. Alert anyone nearby that you are about to start the machine.
20. Familiarize yourself with any national or local regulations that may restrict or limit operation of this machine under certain conditions.

Training

21. Before operating, read and understand all instructions — both in this manual and on the machine itself. Know all controls thoroughly, and know how to stop the machine and disengage all controls quickly.
22. Never allow children to operate this equipment.
23. Never allow any adult to operate this machine without proper instruction and familiarity with this manual.
24. Keep the entire work area clear of bystanders, particularly small children.
25. Take care to avoid slipping or losing your footing, especially when operating in reverse.

Safety Instructions for Operation

26. Keep hands and feet away from all rotating parts at all times. Never reach into or stand near the discharge opening while the machine is running.
27. Use extreme caution on gravel driveways, walks, and roads. Hidden objects and vehicle traffic are serious hazards — always stay alert.
28. If the machine strikes a foreign object, stop the engine immediately and remove the spark plug wire. Inspect the machine thoroughly for damage and complete any necessary repairs before restarting.
29. Stop the engine immediately if the machine vibrates abnormally and identify the cause before continuing. Abnormal vibration is always a sign of a serious problem.
30. Stop the engine any time you leave the operator position, before clearing any blockage from the auger or chute, and before performing any repairs, adjustments, or inspections.
31. Before cleaning, repairing, or inspecting the machine, stop the engine and wait for all moving parts to come to a complete stop. Disconnect the spark plug wire and keep it away from the plug to prevent accidental starting.
32. Do not run the engine indoors except when briefly starting it or moving the machine in or out of a building. Always open all exterior doors first — exhaust fumes are toxic.
33. Use extreme caution when operating on any slope or uneven terrain.
34. Never operate the machine with any guard or safety device missing or disabled. All protective equipment must be in place and working correctly at all times.
35. Never aim the discharge chute at people, animals, windows, vehicles, or any area where ejected material could cause injury or property damage.
36. Do not overload the machine by moving too fast or taking on more snow than it can handle. Slow down in deep or heavy snow.
37. Do not operate at high speeds on slippery surfaces. Always look behind you and proceed carefully when moving in reverse.
38. Disengage the auger drive whenever the machine is being transported or is not actively clearing snow.
39. Use only manufacturer-approved attachments and accessories, such as wheel weights, counterweights, or cabs. Unapproved accessories may compromise safety.
40. Never operate in poor visibility or darkness. Always maintain secure footing and a firm grip on the handles. Walk — never run — while operating.
41. Never touch the engine or muffler during or immediately after operation. These surfaces become extremely hot and will cause burns.

Work Area Safety

42. Walk the entire work area before you begin and remove all potential hazards — doormats, sleds, boards, wires, hoses, toys, and any other objects that could be struck or ejected.
43. Before starting the engine, disengage all clutches and confirm the transmission is in neutral.

44. Always wear appropriate winter clothing when operating this machine. Avoid loose-fitting garments that can be caught in moving parts. Wear slip-resistant footwear with good ankle support and traction on icy surfaces.

1. Handle fuel carefully at all times — it is highly flammable:
    - Store and transport fuel only in approved containers.
    - Never add fuel to an engine that is running or still hot. Allow the engine to cool completely before refueling.
    - Always refuel outdoors. Never fill the tank indoors.
    - Never fill fuel containers inside a vehicle or on a truck or trailer bed with a plastic liner. Always set containers on the ground away from the vehicle before filling.
    - Whenever possible, remove the machine from a truck or trailer and refuel it on the ground. If that is not practical, use a portable fuel container rather than a gas dispenser nozzle.
    - Maintain contact between the fuel nozzle and the tank or container opening throughout refueling to reduce static ignition risk. Do not use a nozzle lock-open device.
    - Replace the fuel cap securely after filling and wipe up any spills immediately.
    - If fuel contacts your clothing, change immediately.

45. For machines with electric start or electric drive, use only extension cords and receptacles of the type and rating specified by the manufacturer.
46. Raise the auger housing height when operating on gravel or crushed rock to prevent ejecting debris at dangerous speeds.
47. Never make adjustments while the engine is running unless the manufacturer explicitly instructs otherwise.
48. Always wear safety glasses or eye protection during operation and during any adjustment or repair. The machine can eject objects without warning.

Personal Protective Equipment

Always wear appropriate personal protective equipment (PPE) when operating this machine. At a minimum, wear sturdy footwear, eye protection, and hearing protection. PPE reduces the severity of injuries but does not eliminate risk — follow all other safety instructions as well.

49. Wear safety glasses or approved eye protection during all operation, maintenance, and repair activities.
50. Dress appropriately for winter weather conditions whenever you operate this machine.
51. Wear heavy-duty, slip-resistant boots with solid ankle support to maintain footing on slippery surfaces.
52. Avoid loose-fitting or baggy clothing that could be caught in the machine's moving parts.
53. Wear protective gloves when handling or inspecting the auger blades or any other sharp components.
54. Wear approved hearing protection throughout operation. Prolonged exposure to engine noise can cause permanent hearing loss.

Safety Devices on the Product

55. Keep up with all scheduled maintenance. Regular service extends the life of the machine and significantly reduces the risk of accidents. Have an authorized dealer or service center perform periodic inspections, adjustments, and repairs.
56. Do not operate the machine if any guard, safety device, or protective component is damaged or missing. Contact an authorized service center before resuming use.

Muffler Safety

The muffler reduces engine noise and directs exhaust fumes away from the operator. Never operate the machine with a missing or damaged muffler — a defective muffler increases both noise levels and fire risk. Inspect the muffler before each use to confirm it is securely attached and in good condition.

> ⚠ **WARNING:** The muffler becomes extremely hot during and after operation — even at idle. Keep flammable materials well away from the muffler at all times.

Fuel Safety

> ⚠ **WARNING:** Read all fuel safety instructions carefully before handling fuel or operating the machine.

57. Do not start the machine if fuel or oil has spilled on any part of it. Clean up the spill thoroughly and allow the machine to dry completely before starting.
58. Change your clothing immediately if fuel is spilled on it.
59. Keep fuel off your skin. If skin contact occurs, wash the area immediately and thoroughly with soap and water.
60. Never start a machine that has a fuel leak. Inspect the fuel system for leaks before each use.
61. Fuel is highly flammable and its vapors are explosive. Use extreme care whenever you are handling or storing fuel.
62. Do not breathe fuel vapors. Always work in a well-ventilated area when handling fuel.
63. No smoking near fuel, the fuel tank, or the engine.
64. Keep all heat sources, open flames, and sparks away from fuel and the engine.
65. Always shut the engine off before adding fuel.
66. Allow the engine to cool completely before refueling. Fuel on a hot engine can ignite.
67. Open the fuel tank cap slowly before refueling to release any pressure in the tank gradually.
68. Never refuel indoors or in any enclosed space. Fuel vapors and exhaust fumes accumulate rapidly in confined areas and can cause asphyxiation or fatal carbon monoxide poisoning.
69. Always tighten the fuel tank cap securely after refueling. A loose cap allows fuel vapors to escape and creates a fire hazard.
70. After refueling, move the machine at least 3 m (10 ft) away from the refueling spot before starting the engine. This prevents accidental ignition of any residual fuel vapors.
71. Do not overfill the fuel tank. Leave room for fuel expansion and to prevent spillage.

Safety Instructions for Maintenance

> ⚠ **WARNING:** Read all maintenance safety instructions carefully before performing any service or repair on this machine.

72. Engine exhaust contains carbon monoxide — an odorless, colorless, and potentially lethal gas. Never run the engine indoors or in any enclosed or poorly ventilated space.
73. Before performing any maintenance or service, stop the engine, let it cool, and disconnect the ignition cable from the spark plug.
74. Always wear protective gloves when working near the auger blades. The blades are extremely sharp and can cause severe lacerations even when the machine is stopped.
75. Never modify this machine or use non-approved accessories. Unapproved accessories and modifications can cause serious injury or death.
76. Skipping or incorrectly performing scheduled maintenance increases the risk of both equipment damage and personal injury.
77. Only perform the maintenance tasks described in this manual. For any repair or service not covered here, contact an authorized service agent.
78. Schedule regular inspections with an authorized service agent. Replace any damaged, worn, or broken parts before continuing to operate the machine.

⚠ **WARNING:** Do not start the engine until assembly and all adjustments are fully completed.

5.1 Unpacking

- Carefully open the packaging and remove all assemblies and individual parts.
- Handle all control cables and pull cords with care during unpacking to avoid kinking or damage.
- Inspect the entire machine for dents, cracks, or mechanical defects that could have resulted from improper handling during shipping.
- Verify that all external connections and fasteners are securely tightened.

⚠ **WARNING:** Read and observe all applicable rules in Section 4 (Safety Instructions) before proceeding.

5.2 Assembly

⚠ **WARNING:** Assembly and adjustment of this snow blower require specialized knowledge and hands-on experience. If you are not confident in your ability to safely complete assembly, contact an authorized service center for assistance.

Handle Frame Assembly

1. Install the middle handle frame segment (Item 19) to the designated mounting positions on the machine housing using bolts, nuts, and flat washers. Route the operating control cables along the inner face of the handle frame. (See Figure 2)
2. Connect the upper handle frame segment (Item 20) to the middle segment (Item 19) using the provided shaped bolts and star-grip knobs to complete the full handle frame assembly. (See Figure 2)

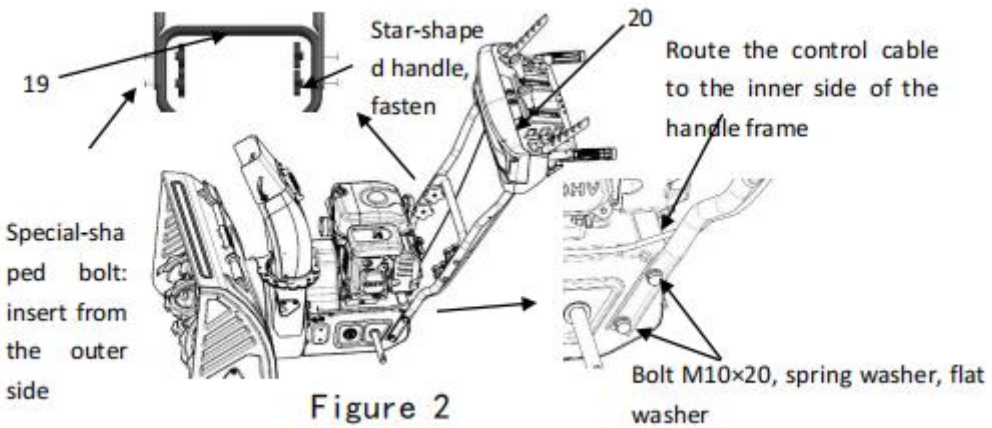

Figure 2

Travel Shift Lever Installation

1. Fit the lower end of the shift lever (Item 21) into its corresponding mounting hole on the machine body. Install a flat washer, then secure the lower end with an R-type cotter pin.

2. Fit the upper end of shift lever (Item 21) into the corresponding mounting hole on the upper handle frame section (Item 20). Install a flat washer and secure with an R-type cotter pin. (See Figure 3)

NOTE: Fully seat each R-type cotter pin into its final lock position to prevent accidental dislodgement. The shift lever length is factory-set and requires no readjustment under normal circumstances.

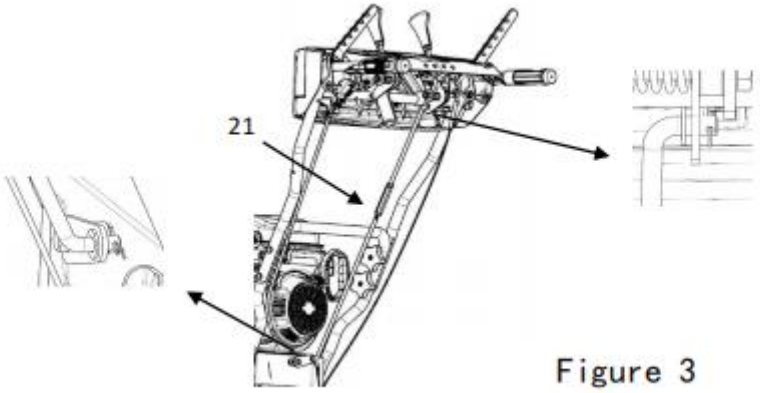

Figure 3

Chute Assembly

1. Remove the pressure blocks, bolts, and nuts pre-installed on the discharge chute (Item 22). Before mounting, apply an even coat of grease to the chute flange to prevent icing and to ensure smooth rotation.
2. Secure the chute (Item 22) to the mounting seat on the machine body using the previously removed bolts, pressure blocks, and nuts. Confirm that the lower chute housing can rotate freely after installation. (See Figure 4)
3. Feed one end of the chute control cable through the hole in the power support bracket, then connect it to the appropriate mounting position on the handle frame. Tighten the cable to the position marked by the factory reference mark.

NOTE: Fully seat all R-type cotter pins into their final lock positions to prevent dislodgement.

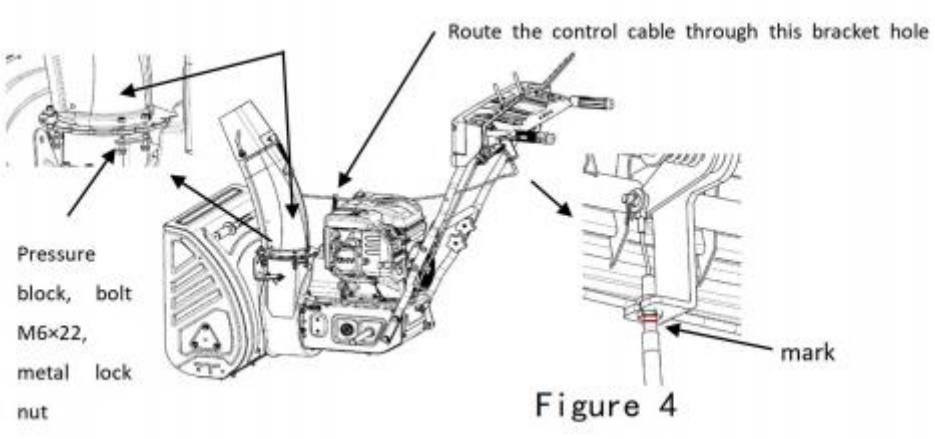

Figure 4

Drive Control Cable Installation

1. Detach the Z-shaped hook of drive control cable (Item 23) from its threaded tube.
2. Insert the Z-shaped hook into the inner hole of the drive clutch handle (Item 2), then thread the tube back onto the hook. Align the threaded tube to the factory reference mark. (See Figure 5)

NOTE: Cable tension can be adjusted later if required.

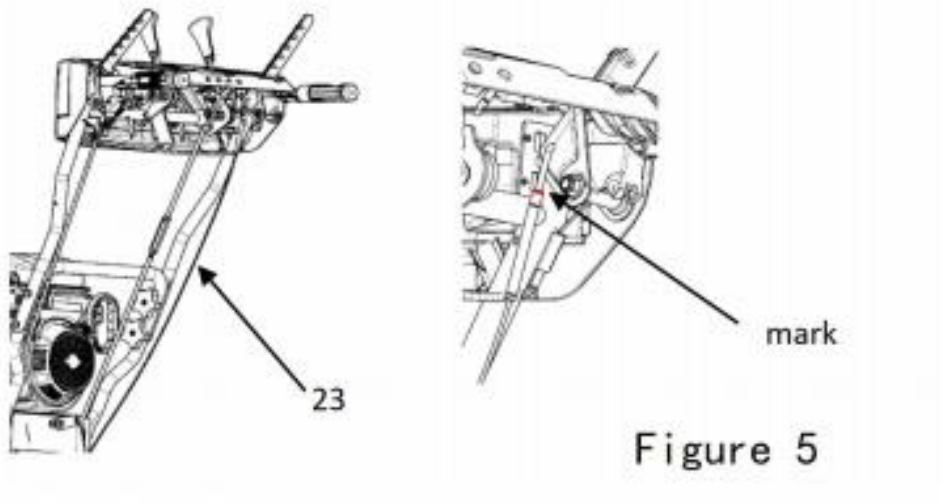

Figure 5

Shift Handle and Decorative Panel Connection

1. Thread and hand-tighten the travel shift handle (Item 3) and chute angle adjustment handle (Item 4) onto the external threads of the upper handle frame section (Item 10). (See Figure 6)
2. Once the handles are positioned correctly, tighten nut (Item 25) firmly to lock them in place.
3. Align the cable connector from the decorative panel on the upper handle section with the power output cable connector. Match the connector orientation to the locking buckle for full engagement.

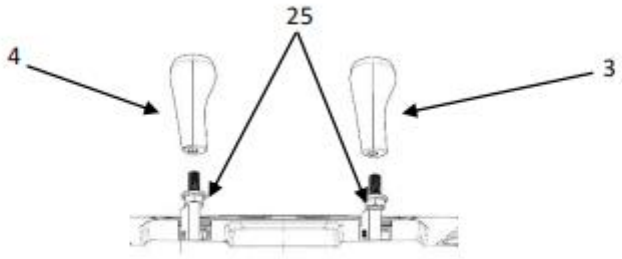

Figure 6

Chute Rotation Control Lever Installation

1. Mount the bracket of chute rotation control lever (Item 26) onto the side mounting holes of the upper handle section (Item 10). Secure with the star-shaped handle nut, aligning to the factory reference mark. (See Figure 7)
2. Insert the torsion spring end of the chute rotation control lever (Item 26) into the corresponding mounting hole of the bracket beneath the discharge chute.
3. Install a flat washer on the terminal end of the lever, then lock it with an R-type cotter pin. Fully seat the pin into its lock position.

NOTE: After assembly, the chute rotation control lever must turn freely without excessive resistance. If resistance is felt, inspect the assembly before proceeding.

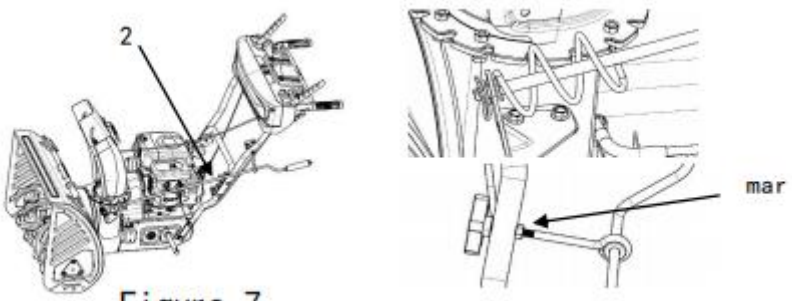

Figure 7

Shear Pin Inspection and Replacement

The snow blower is shipped with shear pins (Item 27) pre-installed at the factory. Initial installation is not required; however, inspect all shear pins before first use to confirm they are tight and undamaged.

The auger blade (Item 14) is fastened to the worm shaft of the gearbox (Item 29) by the shear pins (Item 27). (See Figure 8)

1. Fully insert the shear pin (Item 27) through the alignment hole.
2. Lock the shear pin securely using a cotter pin (Item 28).

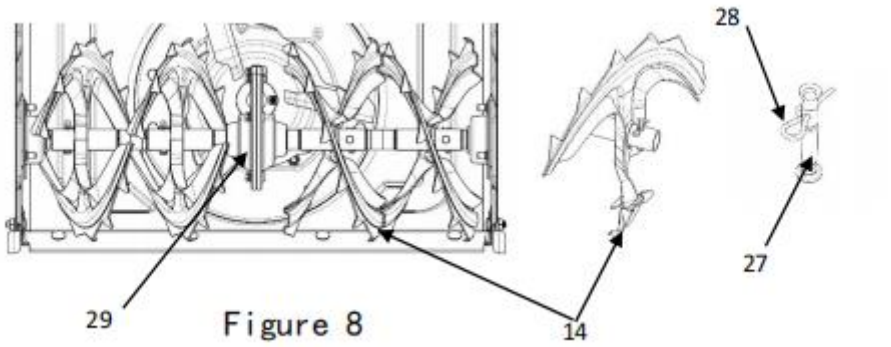

Figure 8

Snow Scraper and Skid-Shoe Installation

The snow scraper and skid-shoes are pre-installed at the factory. Before each use, check that all fasteners are secure, as vibration during transport may cause loosening.

- Snow Scraper replacement (at approximately 30 hours): Secure the replacement snow scraper to the auger housing (Item 13) using semi-round head square neck bolts M8×14 and nuts. (See Figure 9)
- Skid Shoe (Item 15) replacement: Attach to the auger housing (Item 13) using M8×14 and M8×18 bolts, nuts, and washers. Always perform the height adjustment on a flat, level surface. (See Figure 9)

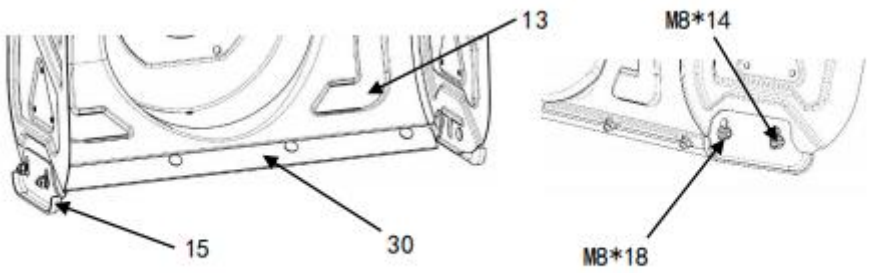

Figure 9

Drive Wheel Installation

In snowy and icy conditions, both wheels must be firmly locked to the transmission axles to ensure proper traction.

1. Align the holes in the tire (Item 31) axle with the inner holes of the wheel shaft (Item 32).

2. Insert the ring-shaped locking pin (Item 33) simultaneously through both the tire axle and wheel shaft inner holes to lock the wheels in drive mode. (See Figure 10)

NOTE: The pin (Item 33) must pass through the inner hole of the wheel shaft (Item 32) for the machine to drive during operation. The outer hole is a free-wheel (transport) position only: with the pin in the outer hole, the wheels turn freely for easy maneuvering when moving the machine by hand, and the machine will not propel itself. Move the pin back to the inner hole before operating.

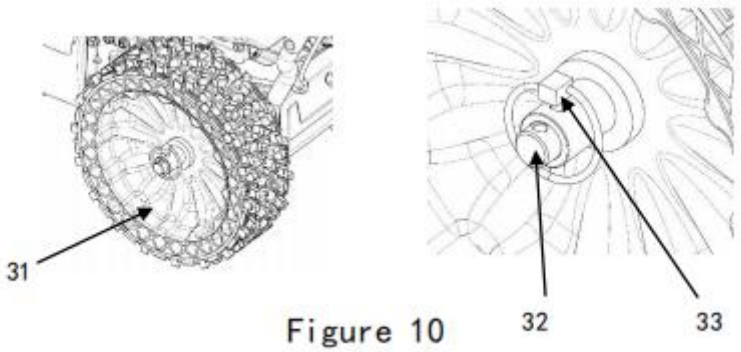

Figure 10

5.3 Adjustments

Clutch Lever Adjustment

- Both the Auger Drive Clutch Lever (Item 5) and the Travel Clutch Lever (Item 2) should move freely toward the Handle Rubber Grip (Item 1) with moderate force — neither too tight nor too loose.
- Verify that both levers return freely to their starting positions when released with no sticking, binding, or resistance.
- Each clutch handle must be pressed fully against the control handle to engage. In the released position, the clutch cable must be slack (not under tension).
- The transmission cable must maintain tension but must not be overly tight. Adjust cable tension as needed.

Skid-shoe Height Adjustment

- Adjust the height of the Skid-shoe (Item 15) relative to the ground to minimize the risk of foreign objects entering the auger assembly. To adjust, loosen the mounting bolts, reposition the left and right Skid-shoes, then retighten.
- On rough, uneven, or gravel surfaces: Set the Skid-shoe clearance to greater than 30 mm above the ground. Lower the Skid-shoes as far as possible relative to the machine body.
- On flat, hard surfaces: Set the Skid-shoe clearance to approximately 3 mm above the ground.

⚠ CAUTION: Incorrect Skid-shoe height will cause premature wear to the snow scraper and Skid-shoes, and may lead to damage of the auger assembly.

Tire Maintenance

- This unit features air-free tires. When storing for a long period of time, minor flattening may be observed. This is normal. Simply operate the snowblower for a short period of time and the tire will even out automatically.

NOTE: Do NOT apply direct heat to the tires. Temporary unevenness will work out when operating.

Drive Belt Tension

The snow blower uses a V-belt drive system. Belts (Items 35 and 38) should be inspected at intervals not exceeding 50 hours of operation.

- Remove the belt housing guard to access belts (Items 35, 38) and pulleys (Items 34, 36, 40, 41). Inspect for cracks, breaks, fraying, or delamination. Replace any damaged belts.
- Inspect belt tensioners (Items 37, 39) for wear on the roller working surfaces. Replace if damaged.
- If excessive bearing noise is detected from any belt tensioner, replace the tensioner or bearing as needed.

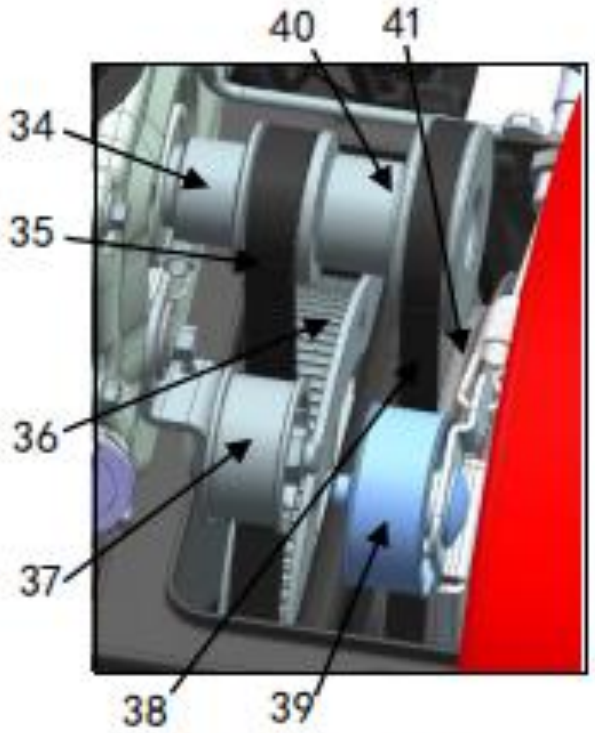

Figure 11

6. Operation

⚠ **WARNING:** This snow blower is shipped WITHOUT engine oil or fuel. NEVER start the engine without first adding engine oil. Running without oil will cause immediate and severe engine damage and is not covered under warranty.

⚠ **WARNING:** Before starting, read and follow all applicable rules in Section 4 (Safety Instructions).

6.1 Fueling

- Fuel only when the engine is OFF and fully cooled.
- Clean the area around the fuel tank cap (Item 8, Figure 1) before opening to prevent contamination.
- Confirm that the fuel filter screen is in place inside the tank before filling.
- Use fresh, clean, unleaded 92-octane gasoline. Never use stale, deteriorated, or leaded fuel.
- Use a funnel to fill the tank outdoors. Avoid spilling fuel on the machine body or engine.
- Wipe away any spilled fuel completely before starting the engine.
- Do not fill fuel above the level of the filter screen.
- Check for fuel leaks after refueling. Do not operate the machine if any leak is present.
- If storing the snow blower, drain all fuel from the tank and carburetor. Never leave fuel in the tank during long-term storage.
- In cold weather, keep the tank as full as practical to reduce moisture condensation on interior tank walls.
- Store fuel in an approved container that is clean, dry, and free of rust, dirt, or other contaminants.

⚠ **WARNING:** Gasoline is highly flammable and explosive. No smoking. No open flames. Observe all fire safety measures when handling and storing gasoline.

6.2 Engine Oil Check

- The engine is shipped without oil. Add engine oil before the very first use.
- Always check and change oil with the engine off and fully cooled.
- Unscrew the oil dipstick (Item 9, Figure 1) and add the appropriate oil (SAE 5W-30).
- Reinstall the dipstick and wipe off any oil that dripped on the machine.
- Check the dipstick level: If the oil is below the LOW (L) mark, add oil until it reaches the HIGH (H) mark. Do not overfill.
- Keep the oil fill area clean to avoid contaminating the engine.
- Check the oil level before every use.
- Replace the oil after the first 20 hours of operation, then every 100 hours thereafter.

To change the engine oil:

1. Place a waste oil collection container beneath the drain hole.
2. Remove the oil drain bolt (Item 47, Figure 12) and allow the oil to drain completely.
3. Check the drain hole for blockages and clean if necessary.
4. Reinstall and tighten the drain bolt securely.
5. Add fresh SAE 5W-30 oil to the HIGH (H) dipstick mark and verify no leaks.

⚠ **WARNING:** Do not pour waste oil into drains or on the ground. Dispose of waste oil at an approved collection and recycling facility.

⚠ **CAUTION:** Use synthetic SAE 5W-30 engine oil for best protection in cold temperatures. The use of non-recommended oils may void warranty coverage for engine damage.

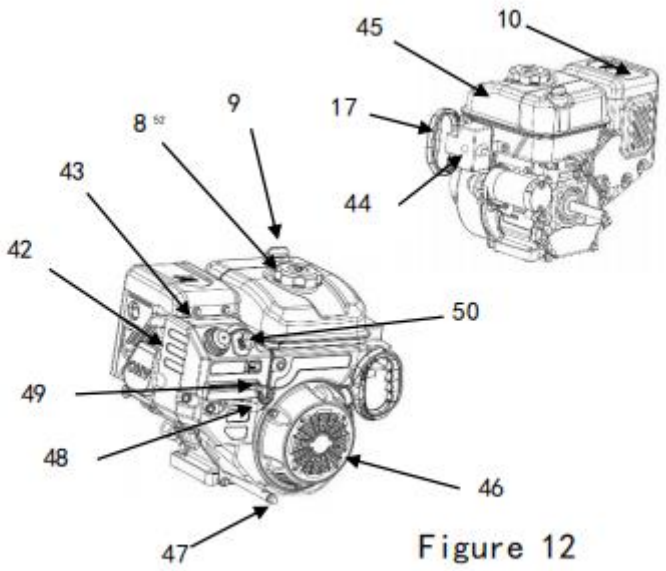

Figure 12

6.3 Starting the Engine

Complete the following checks before every use:

- Verify all external connections and fasteners are tight. Vibration during transport can loosen components.
- Inspect the machine for physical damage and check for any fuel or oil leaks.
- Verify the fuel level and engine oil level are adequate.
- Check tire pressure.
- Confirm that the wheels and auger blades are free to rotate (not pinned by ice or debris).
- Confirm the Travel Gear Shift Lever (Item 3) is set to the correct starting gear position. (See Figure 1)
- Set the fuel shut-off valve (Item 48, Figure 12) to the OPEN position.

Choke (Valve) Setting

- Cold start (engine at ambient temperature): Set the choke (Item 49) to the CLOSED (choke ON) position to enrich the fuel mixture.
- Warm/hot restart: Set the choke to the OPEN position.
- Intermediate temperatures or partially warm engine: Set the choke to the HALF position.

NOTE: When the choke is set to the mid position, engine power output is highest. After the engine warms and runs smoothly, open the choke fully.

Manual (Recoil) Start — Procedure

1. Set the fuel shut-off valve (Item 48) to the OPEN position.
2. Set the choke valve (Item 49) to the CLOSED position for a cold start.
3. Insert the safety key (Item 50) fully into its receptacle.

4. Press the primer button 2–3 times.
5. Grip the recoil start handle (Item 17) firmly. Pull the cord gently until you feel resistance, then pull firmly to crank the engine. Repeat as needed.
6. After the engine fires, do NOT immediately release the handle. Return the handle slowly, allowing the rope to retract smoothly into the housing.
7. If the engine does not start, wait 20 seconds, press the primer button once more, and repeat the starting procedure.
8. Once the engine runs steadily, wait 50–60 seconds, then open the choke valve (Item 49) to the OPEN position to allow the engine to warm up at operating temperature.

> ⚠ **WARNING:** Do not pull the recoil starter cord to its full extension with excessive force — this can damage the starting mechanism and is not covered under warranty. The key to a successful pull-start is a brisk, controlled motion through approximately two-thirds of the rope length — not force.

Electric Start — Procedure

Follow Manual Start steps 1 through 4 above, then:

- Battery start: Press and hold the electric start button until the engine fires, then release.
- Corded start: Plug the power cord into an appropriate outlet, then press and hold the electric start button until the engine fires, then release and unplug the cord.

> ⚠ **WARNING:** Never pull the recoil start handle while the electric starter is engaged or while the engine is running — this may cause engine damage.

Break-In Period (First 20 Hours)

A proper break-in period during the first 20 hours of operation is essential for long engine life.

- Do not exceed 70% of rated operating capacity.
- Avoid continuous operation exceeding 2 hours at a time.
- Inspect all components and fasteners visually before and during operation.
- Change the engine oil as soon as the 20-hour break-in period is complete.

6.4 Stopping the Engine

1. Move the throttle valve (Item 49) to the minimum throttle (idle) position.
2. Allow the engine to idle for 2–3 minutes before shutting down.
3. Remove the safety key (Item 50).
4. Set the fuel shut-off valve (Item 48) to the CLOSED position.

6.5 Operating Sequence

1. Verify the Travel Gear Shift Lever (Item 3) is in the correct gear for operating conditions.
2. Start the engine and allow it to reach operating temperature.
3. Adjust travel speed and chute direction as needed for conditions.
4. To begin snow removal: squeeze the Travel Clutch Lever (Item 2) to start moving, then squeeze the Auger Drive Clutch Lever (Item 5) to engage the auger.
5. To stop: release both clutch levers (Items 2 and 5). The machine will stop and the auger will disengage.

> ⚠ **CAUTION:** If you notice decreased engine speed, unusual noise, abnormal odors, smoke, excessive vibration, or unexpected shutdown during operation — stop immediately and contact an authorized service center.

Changing Travel Speed

⚠ **WARNING:** Always release both clutch levers and bring the machine to a complete stop before shifting gears.

- Gear 1–2 (Low): Best for wet, heavy, or deep snow.
- Gear 3–4 (Medium): Standard operating speeds for dry or moderate snow.
- Gear 5 (High): Use for transporting the machine when not in snow-clearing operation.
- Reverse Gears R1–R2: Pull the shift lever rearward to activate reverse. Always stop before engaging reverse.

NOTE: Ensure each gear shift engages fully. Never leave the shift lever between gear positions.

Adjusting Snow Discharge Direction and Distance

- Distance: Adjust the chute deflector angle lever (Item 4) — a greater angle increases throw distance; a smaller angle reduces it.
- Direction: Rotate the chute rotation control lever (Item 7) to point the lower chute housing (Item 12) toward the desired discharge area.

⚠ **CAUTION:** Never direct the snow discharge toward people, animals, windows, vehicles, or other structures.

Clearing Snow Blockages

In certain weather conditions, wet or heavy snow may clog the auger housing or discharge chute.

- Stop the engine immediately and wait for all moving parts to come to a complete stop.
- Use only the dedicated clearing tool or a wooden implement to clear blockages from the auger and chute.

⚠ **WARNING:** NEVER use your hands to clear snow or debris from the auger or discharge chute — serious injury will result.

6.6 Tips for Effective Snow Removal

General Best Practices

- Remove snow as soon as possible after it falls. Fresh snow clears fastest and with the least strain on the machine.
- Overlap each pass slightly to ensure full coverage.
- Use a snow scraper for thin layers of snow before using the blower.
- Walk the work area before starting and remove any visible obstacles — rocks, hoses, extension cords, or debris.
- On gravel or debris surfaces, raise the Skid-shoe to prevent contact between the auger blade and the ground surface.

Dry and Medium Snow

- At medium travel speed (Gear 3–4), snow up to 20 cm (8 in.) deep can be cleared efficiently.
- For snow depths exceeding 20 cm, reduce to a lower gear (1–2) for controlled passes.
- Clear snow in the direction of the prevailing wind whenever possible.

Wet and Packed Snow

- Wet or melting snow clumps easily and can block the chute or overload the gearbox. Use low speed (Gear 1–2) in these conditions.
- Dry, loose snow typically passes through the chute without issue. Wet snow requires more frequent monitoring.
- Clear the discharge chute promptly if it becomes blocked — use the clearing tool only.

⚠ **WARNING:** Do not use the snow blower to break up or remove compacted ice chunks. This can physically jam the drive shaft and damage the machine. Do not use the auger to crush large ice masses.

Working on Slopes

⚠ **CAUTION:** Use extreme caution on slopes. The machine can tip or become difficult to control on steep or uneven terrain.

- Avoid steep slopes. Do not operate on slopes exceeding 20 degrees.
- Travel only up or down a slope — never across the face of a slope.
- Avoid working near drop-offs, edges, or unguarded cliffs.
- Take extra care when changing direction on slopes.
- Be alert to obstacles that may be hidden under the snow.

Cold-Weather Operating Tips

- Keep the fuel tank as full as practical in cold weather to reduce moisture condensation inside the tank.
- Do not operate the snow blower at ambient temperatures below −20°C (−4°F).
- After stopping in cold conditions, move the machine to a warm, dry room promptly. This prevents ice from forming in the engine and carburetor and makes the next start easier.
- After completing each snow removal session, run the engine for a few minutes to allow snow and ice to melt from the machine.
- Clean the machine thoroughly after each use. Use water (with a mild detergent if necessary) to remove buildup.

⚠ **CAUTION:** If the engine has frozen during storage, do not attempt to start it. Do not use any open flame or welding torch to warm the engine. Move the machine to a warm, dry room and allow it to reach room temperature naturally before attempting a start.

⚠ **WARNING:** All maintenance work must be performed with the engine stopped and fully cooled. Disconnect the spark plug wire before performing any service.

7.1 Maintenance Schedule

Regular preventive maintenance extends the life of your snow blower and keeps it operating safely and efficiently. In demanding conditions, perform scheduled tasks more frequently.

Complete the first inspection after 11.5 hours of operation. Thereafter, inspect every 50 hours or at least once per month during the operating season.

Maintenance Task	Before Each Use	Every 50 hrs	Every 100 hrs	Each Season
Engine oil level check	✓			
Change engine oil			✓	
Check all fasteners for tightness	✓			
Check tire pressure	✓			
Inspect / clean spark plug		✓		
Inspect belt condition		✓		
Replace spark plug				✓
Snow blower lubrication		✓		
Gearbox lubricant				✓
Fuel level check	✓			
Check cable tension	✓			

7.2 Engine Oil Replacement

Follow these oil maintenance requirements to prevent engine damage:

- Check the oil level before every engine start and every 5 hours of operation.
- Change the engine oil after the first 20 hours of operation, then every 100 hours thereafter.
- Change oil only when the engine is warm (not hot) and stopped.
- Drain and replace the oil completely. Never mix new oil with old oil.

Regardless of interval, change the oil immediately if any of the following are observed:

- Oil appears milky, white, or cloudy — indicates water contamination.
- Oil is very dark or black — indicates overheating.
- Visible metallic particles or foreign debris are present in the oil.

To change the engine oil:

1. Place a waste oil collection container beneath the oil drain hole.
2. Remove the drain bolt (Item 47, Figure 12) and allow the old oil to drain completely.
3. Inspect the drain hole and clean if necessary.
4. Reinstall and tighten the drain bolt securely.
5. Add fresh SAE 5W-30 engine oil to the HIGH (H) dipstick mark.
6. Verify no oil leaks are present before starting the engine.

⚠ **WARNING:** Do not pour waste oil into drains, waterways, or onto the ground. Collect it in approved containers and bring it to a certified waste oil disposal facility.

7.3 Spark Plug Service

Inspect the spark plug every 100 hours of operation, or at least once per season.

1. Stop the engine and allow it to cool. Clean the area around the spark plug.
2. Remove the spark plug using the appropriate spark plug socket wrench.
3. The electrode tip should be yellowish-brown. Black, wet, or heavily fouled deposits indicate a fuel, oil, or ignition issue.
4. Clean the electrodes gently with fine sandpaper until clean metal is exposed.
5. Check and adjust the electrode gap to 0.7 mm using a feeler gauge.
6. Reinstall the spark plug and tighten firmly. Reconnect the spark plug wire.

NOTE: Replace the spark plug at the start of each operating season, or whenever it cannot be cleaned or properly gapped.

7.4 Gearbox Lubricant

Replenish or replace gearbox lubricant once per season before the start of the operating period.

1. Clean the area around the gearbox grease fitting (Item 51).
2. Use a quality gearbox grease appropriate for worm drive gearboxes.
3. Unscrew the grease fitting (Item 51) and use a grease pump (not included) to inject approximately 100 grams of lubricant into the gearbox.
4. Reinstall the grease fitting (Item 51) and tighten securely.

⚠ **WARNING:** The presence of lubricant in the gearbox is essential for reliable operation and cooling. Gearbox failure due to lack of lubrication constitutes a violation of operating conditions and is not covered under warranty.

7.5 Cylinder Wall Lubrication

Before placing the machine in extended storage, lubricate the cylinder walls to prevent corrosion. Engine oil drains away from cylinder walls during long periods of inactivity, causing accelerated wear on the first start after storage. This procedure prevents that.

1. Disconnect the high-voltage wire from the spark plug.
2. Remove the spark plug.
3. Carefully pour approximately 30 mL of clean engine oil into the spark plug hole.
4. Cover the spark plug hole with a clean cloth to prevent contamination.
5. Gently pull the recoil start handle twice to distribute the oil over the cylinder walls.
6. Reinstall the spark plug and reconnect the spark plug wire.

NOTE: This procedure ensures the cylinder walls are properly coated and protected during storage, making the next start significantly easier.

7.6 Cleaning, Storage, Transport & Disposal

Cleaning the Snow Blower

- Clean the exterior of the snow blower after each use to remove snow, ice, salt, and debris.
- Keep all surfaces, wheels, and components free of fuel, oil, and contaminants.
- Use an appropriate cleaning agent or engine cleaner spray to remove oily deposits from engine components. This ensures optimal cooling and reduces fire risk.
- Avoid high-pressure water washing. If necessary, close the muffler and carburetor openings before washing. Prevent water from entering the engine.
- Do not clean the engine outdoors in freezing temperatures — water on the engine or components may freeze.

Preparing for Storage

Prepare the machine for storage at the end of each season, or whenever it will sit unused for 30 days or more.

- Thoroughly clean the machine — remove all dirt, ice, oil residue, and debris.
- Lubricate the cylinder walls (as described in Section 7.5).
- Check and service the ignition system, and rubber seals and hoses.
- Apply a light coat of oil or rust-inhibiting preservative to all exposed metal surfaces, especially where paint is scratched or damaged.
- Drain all fuel from the fuel tank and carburetor. Stale fuel forms harmful deposits in the fuel system over time.

> ⚠ **WARNING:** Never store the snow blower with fuel in the tank. Never store in any space with open flames, heat sources, or fire hazards.

- Cover the machine with a breathable fabric cover. Do not use plastic sheeting — it traps moisture and promotes corrosion.
- Never cover the machine while the engine or exhaust system is still warm.
- Store in a clean, dry, unheated, ventilated room — out of reach of children — at temperatures between +5°C and +35°C, and with relative humidity not exceeding 80% at +25°C.
- Keep this manual and all accessories with the machine in storage.

Returning to Service After Storage

- Remove all dust and debris from the machine.
- Inspect and tighten all nuts, bolts, and fasteners.
- Inspect rotating parts for wear or damage. Replace as needed.
- Apply a fresh coat of oil or preservative to any exposed metal.
- Drain and replace the engine oil.
- Check the ignition system, tire pressure, and rubber seals.
- Replace any cracked or deteriorated rubber components before operating.
- For the first 5 hours after returning from storage, operate at reduced load.

Transportation

- Transport the snow blower in its original manufacturer's packaging when possible.
- Remove all fuel and oil before transporting. Keep the machine in a horizontal position during transport.
- Secure the machine to prevent shifting or impact damage during transit.
- Safe transport temperature range: −10°C to +40°C, with relative humidity up to 80% at +25°C.

Disposal and Recycling

- At end of service life, dispose of the snow blower in compliance with local environmental regulations.
- Disassemble the machine and sort materials by type (metals, plastics) for recycling.
- Drain and separately recycle all technical fluids (fuel and oil) according to applicable waste oil recycling standards.

⚠ **WARNING:** Do not pour waste oil or fuel into drains, waterways, or onto the ground. Bring waste fluids to a certified collection and disposal facility.

8. Troubleshooting

Use the table below to identify and resolve common issues. If you cannot resolve a problem using this guide, or if the issue recurs, contact an authorized service center.

Problem	Possible Cause	Corrective Action
Engine does not start	Safety key not fully inserted	Insert the safety key completely.
	Fuel tank empty	Fill with fresh, clean 92-octane gasoline.
	Fuel shut-off valve in CLOSED position	Set the fuel shut-off valve to OPEN.
	Choke (valve) in wrong position	Cold start: set choke to CLOSED. Warm start: set to OPEN.
	Primer not activated	Press the primer button 2–3 times as instructed.
	Engine flooded	Wait several minutes. Restart with throttle at FULL and choke OPEN. Do not prime again.
	Spark plug wire disconnected	Reconnect the wire to the spark plug.
	Spark plug fouled or worn	Clean or replace the spark plug.
	Stale or contaminated fuel	Drain tank and carburetor. Refill with fresh fuel.
	Air in fuel line	Disconnect fuel line from carburetor and allow fuel to flow until air is purged, then reconnect.
Decreased power output	Spark plug wire loose or disconnected	Reconnect the wire to the spark plug.
	Clearing too much snow at once	Reduce travel speed or clear a narrower path.
	Fuel tank cap iced over	Remove ice and snow from cap and surrounding area.
	Muffler clogged or dirty	Allow engine to cool. Clean or replace the muffler.
	Cable adjustment incorrect	Adjust control cable tension as described in Section 5.3.
	Carburetor air intake blocked	Allow engine to cool, then clear the blockage.
Engine idles or runs roughly	Choke set incorrectly (too rich)	Move choke to OPEN/OFF position.
	Fuel line blocked	Clean the fuel line.
	Stale or contaminated fuel	Drain and refill with fresh fuel.
	Carburetor requires service	Contact an authorized service center.
	Auger drive belt stretched	Replace the auger V-belt.
Excessive vibration or handle movement	Loose fasteners or damaged auger	Tighten all fasteners. Replace damaged parts. Contact service center if vibration persists.
	Handles not locked correctly	Verify handles are locked securely in position.

Problem	Possible Cause	Corrective Action
	Adjustment lever nuts loose	Tighten nuts until handles feel secure.
Recoil handle difficult to pull	Recoil mechanism frozen	Pull rope slowly as far as possible, then let handle return. Repeat, or use electric start if equipped.
	Recoil rope contacting components	Ensure the rope does not contact any wires or hoses.
Loss of traction or drive	Belt slipping	Adjust cable and belt tension.
	Belt worn	Inspect and replace the belt.
	Belt off pulley	Reinstall the belt on the pulley.
	Discharge chute clogged	Clear the chute using the dedicated clearing tool.
	Foreign objects in auger	Remove debris from the auger assembly.
	Shear pin broken	Replace the broken shear pin with an approved replacement.
	Friction drive wheel worn	Contact an authorized service center.
Auger continues after lever released	Drive belt not adjusted correctly	Adjust the drive belt.
Lights not working (if equipped)	Engine not running	Start the engine.
	Loose wire connection	Check wiring at engine and light fixtures.
	LED module burned out	Replace the LED light module. Individual LEDs cannot be replaced.
Chute difficult to rotate	Debris in chute rotation mechanism	Clean the internal parts of the chute rotator.
	Cables kinked or damaged	Verify cables are not kinked. Replace if damaged.
Machine pulls to one side	Uneven tire pressure	Equalize tire pressure per Section 5.3.
	Only one wheel driving	Inspect and verify the wheel locking ring pin is installed in both wheels.
	Uneven Skid-shoe height	Inspect and adjust left and right Skid-shoe heights to equal levels.
No snow discharge	Discharge chute clogged	Stop engine. Clear snow from chute using dedicated tool only.

⚠ **CAUTION:** If any of the following occur during operation — decreased engine speed, unusual sounds, abnormal odors, smoke, excessive vibration, or unexpected shutdown — stop operation immediately and contact an authorized service center. Do not attempt to continue operating the machine.

NOTE: The manufacturer reserves the right to change product design and components without prior notice in order to improve product quality. Certain maintenance and diagnostic procedures described in this manual may not be covered by warranty and may be billable at the service center's current rates.

General Warranty Information

The Manufacturer provides this limited warranty to the Initial Purchaser of new products. The "Initial Purchaser" is the first person to purchase the product from an authorized retailer, distributor, or dealer. The Manufacturer makes no other express warranty. The engine manufacturer and/or battery manufacturer may provide separate warranties for their components.

To ensure warranty coverage, retain your original sales receipt as proof of purchase. The warranty period begins on the date of purchase from an authorized retailer. This warranty is exclusive to the Initial Purchaser, is non-transferable, and applies only to products purchased and used within the United States and Puerto Rico.

Three-Year Limited Warranty — Engine and Gearbox

This model is warranted to be free from manufacturing defects in workmanship and materials for two (2) years from the date of purchase for residential use only. Commercial, rental, or industrial use voids this warranty. During the warranty period, The Manufacturer will, at its option, repair or replace any original part determined to be defective.

This warranty does not cover:

- Accidental damage, misuse, neglect, or normal wear and tear.
- Failure to follow the operating, safety, and maintenance instructions in this manual.
- Unauthorized service, modifications, or use of parts or accessories not authorized by The Manufacturer.
- Expendable or consumable items requiring replacement as part of normal maintenance, unless defective within the first 30 days of purchase.

> ⚠ **CAUTION:** All service beyond routine maintenance must be performed by an authorized service technician of The Manufacturer. Unauthorized service or modification of the machine will void the warranty.

Additional Exclusions

- Products purchased outside the United States or Puerto Rico.
- Damage due to lack of maintenance or improper maintenance as described in this manual.
- Normal wear and tear from regular product use.
- Use inconsistent with the product's intended purpose, including abuse, misuse, or neglect.
- Products altered or modified in any unapproved manner.
- Damage from installation or use of non-OEM parts or accessories.
- Transportation costs, rental expenses, or other costs incurred in connection with warranty service.
- Damage to other equipment or personal property.

Warranty Claims and Service Process

To obtain warranty service, contact Support at 1-855-888-3598, Monday through Friday, 7:30 AM to 5:30 PM Eastern Time, or visit www.tecumsehpowerproducts.com. Have your original sales receipt available.

1. Contact Tecumseh Power Products: Call 1-855-888-3598 during business hours.
2. Provide Proof of Purchase: Submit the original sales receipt and product serial number to confirm warranty eligibility.
3. Obtain an RGA Number: If service is required, The Manufacturer will issue a Return Goods Authorization (RGA) number and provide a list of authorized service centers.
4. Shipping: All packages shipped to The Manufacturer must have the RGA number clearly marked on the outside. Packages without an RGA number will be refused. The Initial Purchaser is responsible for shipping costs. Use a carrier that provides tracking and delivery confirmation.
5. Phone Support: The Manufacturer's support agents will assist with troubleshooting to resolve issues as quickly as possible.

Limitations

- No Implied Warranties: There are no implied warranties, including implied warranties of merchantability or fitness for a particular purpose. No warranty extends beyond the applicable warranty period. (Some states do not allow limitations on implied warranties, so this limitation may not apply to you.)
- No Incidental or Consequential Damages: The Manufacturer shall not be liable for incidental or consequential loss or damages, including transportation costs, rental expenses, or temporary replacement costs. (Some states do not allow exclusion of incidental or consequential damages, so this exclusion may not apply to you.)
- Recovery Limitation: In no event shall recovery exceed the original purchase price of the product. Alteration of safety features voids this warranty, and the Initial Purchaser assumes all risk and liability for loss, damage, or injury arising from such alteration.

How State Law Relates to This Warranty

This limited warranty gives you specific legal rights. You may also have other rights that vary by state.

How To Register Your Warranty

You must visit www.aipower.com/support and register your product with proof of purchase prior to being eligible for warranty support.

Product may differ from that pictured. Does not affect function. All Rights Reserved.

Save this manual for the life of the product.

Tecumsehpowerproducts.com.com | 1-855-888-3598