AIPOWER™

2 YEAR LIMITED WARRANTY

OWNER'S MANUAL AND OPERATING INSTRUCTIONS

ELECTRIC PRESSURE WASHER
MODEL: EPW2800-FM

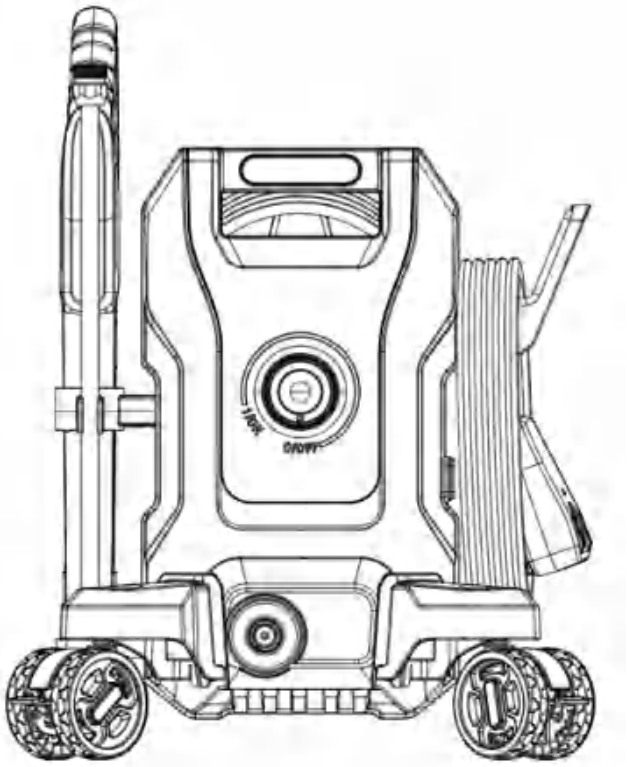

CUSTOMER SERVICE: 1-855-888-3598

Visit Our Website at: www.aipower.com

Email Our Technical Support at:

support@aipower.com

AiPower Corp.
Fontana, CA 92337 USA
www.aipower.com

C ETL LISTED US
Intertek
5026482

WARNING: SAVE THIS MANUAL FOR FUTURE REFERENCE

This manual contains important information regarding safety. Operation, maintenance and storage of this product. Before use, read carefully and understand all cautions, warnings, instructions and product labels. Failure to do so could result in serious personal injury and/or property damage.

TABLE OF CONTENTS

PRODUCT SPECIFICATIONS 1

SAFETY
Safety Symbols and Meanings 2
Safety Instructions and Precautions 3

SETUP
Know Your Pressure Washer 10
Assembly 11
General Information 13

OPERATION
Pre-Start Checks 14

CARE AND MAINTENANCE
Cleaning Pressure Washer 17
Trouble Shooting 18

PARTS LIST AND DIAGRAM
General Assembly Diagram 20
General Parts List 21

WARRANTY
AiPower Warranty 22

PRODUCT SPECIFICATIONS 1

Model	EPW2800-FM
Motor	Universal,120V - 60Hz,13A
Max Pressure	2800 PSI Internal Pressure at Initial Discharge
Max Flow	1.7 GPM with Soap Dispensing
Rated Pressure	2000 PSI
Rated Flow	1.2 GPM
Hose	1/4” x 25’ x M22
Wand	6.5” x 1/4 QC x M22
Nozzle Selection	0°, 25° and 40°

NOTICE:

1. Pressure and Flow are measured independently.
2. We are always working to improve our products. Therefore, final product may vary from images shown. AiPower reserves the right to change features, specifications without notice for future improvements to products.

This Operating Manual has been designed to instruct you on the correct operation of your AIPOWER product. Your satisfaction with this product and its safe operation is our ultimate concern. Therefore, please take the time to read the entire manual, especially the safety symbols and instructions They will help you to avoid potential hazards that may exist when working with this product. Every effort has been made to ensure that information in this manual is accurate and current. However, we reserve the right to change, alter, or otherwise improve the product and this document at any time without prior notice.

Safety Symbols and Warnings:

DANGER: indicates a hazard which, if not avoided, will result in death or serious injury.

CAUTION: indicates a hazard which, if not avoided, could result in minor or moderate injury.

WARNING: indicates a hazard which, if not avoided, could result in death or serious injury.

NOTICE: Indicates information, or addresses practices that are important, but not related to personal injury.

Safety Symbols and Meanings:
The following symbols will appear in this manual and on the product. For safe use of this product, be sure to study them and know their meanings.

	Safety Alert
	Read Operators Manual
	Electrical Shock
	Eye Protection
	Hot Surface
	Fluid Injection
	Kickback
	Moving Parts

	Wet Conditions Alert
	Explosion
	Projectile
	Chemical Burns
	Electrical Hazard
	Slippery Surface
	Fall
	Fire

The following symbols may appear on the product. For safe use of this product, be sure to study them and know their meanings.		
V	VOLTS	Voltage
A	AMPS	Current
Hz	HERTZ	Frequency (cycles per second)
W	WATTS	Power
~	ALTERNATING	Type of current
n_o	NO LOAD SPEED	Rotational speed, at no load
⧈	CLASS II	Double insulated construction
.../ min	PER MINUTE	Revolutions per minute

Safety Instructions and Precautions:

⚠ **WARNING:** READ AND UNDERSTAND ALL SAFETY INSTRUCTIONS

- Keep the work area clear of all persons, particularly small children, and pets.
- Avoid dangerous environments. Keep work area well lit. Don't expose product to rain while in use, or while stored.
- Do not use product if switch does not turn unit off. Have switch replaced by an authorized service center.
- Keep guards in place and in working order. Never operate this product with any guard or cover removed. Make sure all guards and covers are intact and operating properly before each use.
- Keep product dry, clean, and free from oil and grease. Always use a clean cloth when cleaning. Never use brake fluid, gasoline, petroleum-based products, or any solvents to clean product.
- Use caution when positioning the pressure washer for use. Warm air from the motor could cause discolored areas on grass.
- Make sure minimum clearance of 3 feet is maintained from any combustible materials.
- Never pick up or carry a machine while the motor is running.
- Never start the machine if ice has formed in any part of the equipment.
- To reduce the risk of injury, keep all children and visitors away from product when in use. All visitors should wear safety glasses and be kept a safe distance from work area.
- Use product for its intended use. Don't force product or attachment to do a job it was not designed for. Do not use it for a purpose not intended. Use only recommended accessories with this product. The use of improper and or modified accessories may cause risk of injury.
- Never spray too close to the surface to be cleaned, as you can damage the surface. If there is a concern, try cleaning an inconspicuous area first.

- After stopping the motor, always pull the trigger on the trigger handle to relieve stored pressure in the high pressure hose. Failure to do so could result in serious personal injury.
- Do not overreach or stand on a ladder, rooftop, or other unstable support structure. Keep proper footing and balance at all times.
- Stay alert and exercise control. Watch what you are doing at all times and use common sense. Do not operate tool when you are tired. Do not rush.
- Do not operate the product while under the influence of drugs, alcohol, or any medication.
- Do not abuse the cord. Never use the cord to carry the product or to disconnect the plug from an outlet. Keep cord away from heat, oil, sharp edges, or moving parts. Replace damaged cords immediately. Damaged cords increase the risk of electric shock.
- Ground Fault Circuit Interrupter (GFCI) protection should be provided on the circuit(s) or outlet(s) to be used for the product. Receptacles are available having built-in GFCI protection and may be used for this measure of safety.
- To reduce the risk of electric shock, this product has a polarized plug (one blade is wider than the other) and will require the use of a polarized extension cord. The plug will fit into a polarized extension cord only one way. If the plug does not fit fully into the extension cord, reverse the plug. If the plug still does not fit, obtain a correct polarized extension cord. A polarized extension cord will require the use of a polarized wall outlet. This plug will fit into the polarized wall outlet only one way. If the plug does not fit fully into the wall outlet, reverse the plug. If the plug still does not fit, contact a qualified electrician to install the proper wall outlet. Do not change the equipment plug, extension cord receptacle, or extension cord plug in any way.
- WARNING: Use outdoor extension cords marked SW-A, SOW-A, STW-A, STOW-A, SJW-A, SJTW-A, or SJTOWA. These cords are rated for outdoor use and reduce the risk of electric shock. Before every use, inspect cord for loose or exposed wires and cut or worn insulation.
- Make sure your extension cord is in good condition. When using an extension cord, be sure to use one heavy enough to carry the current your product will draw. A wire gauge size (A.W.G.) of at least 14 is recommended for an extension cord 25 feet or less in length. If in doubt, use the next heavier gauge. The smaller the gauge number, the heavier the cord. An undersized cord will cause a drop in line voltage resulting in loss of power and overheating.
- Inspect extension cords periodically and replace if damaged.
- Do not use acids, alkalines, solvents, flammable material, bleaches, or industrial grade solutions in this product. These products can cause physical injuries to the operator and irreversible damage to the machine.
- Before storing, allow the motor to cool.
- When servicing use only identical replacement parts. Use of any other parts may create a hazard or cause product damage.
- Before starting any cleaning operation, close doors and windows. Clear the area to be cleaned of debris, toys, outdoor furniture, or other objects that could create a hazard.
- For cold water only. • Outdoor use only. • Household use only.
- Save these instructions. Refer to them frequently and use them to instruct other users. If you loan someone this product, loan them these instructions also.

⚠ Caution If connection is made to a potable water system, the system should be protected against backflow.

Safety Instructions and Precautions specifically for electricity and electrical components in this product:

DOUBLE INSULATION

Double insulation is a safety system within electric power tools, which eliminates the need for the usual three-wire grounded power cord. All exposed metal parts are isolated from the internal motor components with protecting insulation. Double insulated products do not need to be grounded.

WARNING: Electrical Shock



The double insulated system is intended to protect the user from shock resulting from a break in the product's internal insulation. Observe all normal safety precautions to avoid electrical shock.

NOTE: Servicing of a product with double insulation requires extreme care and knowledge of the system and should be performed only by a qualified service technician. For service, we suggest you return the product to your nearest authorized service center for repair. Only use original factory replacement parts when servicing.

ELECTRICAL CONNECTION

This product has a precision-built electric motor. It should be connected to a power supply that is nominal 120V/60Hz AC (typical U.S. household circuit).

Do not operate this product on direct current (DC). A substantial voltage drop will cause a loss of power and the motor will overheat. If the product does not operate when plugged into an outlet, double-check the power supply.

EXTENSION CORDS

When using a power tool at a considerable distance from a power source, be sure to use an extension cord that has the capacity to handle the current the product will draw. An undersized cord will cause a drop in line voltage, possibly resulting in overheating, loss of power, and/or circuit breaker or GFCI tripping. Use the chart to determine the minimum wire size required in an extension cord. Only round jacketed cords listed by Underwriter's Laboratories (UL) should be used.

When working outdoors with a product, Use outdoor extension cords marked SW-A, SOW-A, STW-A, STOW-A, SJW-A, SJTW-A, or SJTOWA. These cords are rated for outdoor use and reduce the risk of electric shock. Inspect cord for loose or exposed wires and cut or worn insulation.

It is possible to tie the extension cord and power cord in a knot to prevent them from becoming disconnected during use. Make a knot, then connect the plug end of the power cord into the receptacle end of the extension cord. This method can also be used to tie two extension cords together.

Caution If connected to circuit protected by fuses, use time delay fuse marked "D"

GROUND FAULT CIRCUIT INTERRUPTER (GFCI)

This unit is equipped with a Ground Fault Circuit Interrupter (GFCI), which guards against the hazards of ground fault currents. An example of ground fault current is the current that would flow through a person who is using an appliance with faulty insulation and, at the same time, is in contact with an electrical ground such as a plumbing fixture, wet floor, or earth. GFCI plugs do not protect against short circuits, overloads, or shocks.

NOTE: To ensure readiness for use, press the reset button each time you connect the pressure washer to the power supply.

The GFCI plug can be tested with the TEST and RESET buttons.

To test:

- Press the TEST button. You will hear a “click” sound and the red LED light will go out.
- To restore power, press the RESET button. The LED light will illuminate to indicate power has been restored.

Perform this test monthly to ensure proper operation of the GFCI.

WARNING: Electrical Shock

Keep the extension cord clear of the working area. Position the cord so that it will not get caught on lumber, tools, or other obstructions while you are working with a power tool. Failure to do so can result in serious personal injury.

WARNING: Electrical Shock

Check extension cords before each use. If damaged replace immediately. Never use the product with a damaged cord since touching the damaged area could cause electrical shock resulting in serious injury.

Additional Safety Instructions and Precautions:

WARNING: Electrical Shock

Contact with power source could cause electric shock or burn resulting in death or serious injury.

- Never spray at or near an electric power source, including the product itself.

WARNING: Chemical Burn

Chemicals could cause burns resulting in death or serious injury.

- DO NOT use caustic liquid with pressure washer.
- Use ONLY pressure washer safe detergents/soaps. Follow all manufacturer’s instructions.

NOTICE: For additional information regarding the parts listed in the following pages, refer to:

- PARTS LIST AND DIAGRAM on Page 20.

NOTICE: High pressure spray could damage fragile items including glass.

- DO NOT point spray gun at glass when using red (0°) nozzle.
- NEVER aim spray gun at plants.

NOTICE: Improper treatment of pressure washer could damage it and shorten its life. If you have questions about intended use, contact our service center at 1-855-888-3598.

- NEVER operate units with broken or missing parts, or without protective housing or covers.
- DO NOT by-pass any safety device on this machine.
- DO NOT operate pressure washer above rated pressure.
- DO NOT modify pressure washer in any way.
- Before starting pressure washer in cold weather, check all parts of the equipment to be sure ice has not formed there.
- NEVER move machine by pulling on hoses. Use handle provided on unit.
- This equipment is designed to be used with A-iPower authorized parts ONLY. If equipment is used with parts that DO NOT comply with minimum specifications, user assumes all risks and liabilities.

WARNING: Moving parts hazard



Motor and other rotating parts could entangle hands, hair, clothing or accessories, resulting in serious injury.

- NEVER operate pressure washer without protective housing or covers.
- DO NOT wear loose clothing, jewelry or anything that could be caught in the motor or other rotating parts.
- Tie up long hair and remove jewelry.

WARNING: Kickback Hazard



Firmly grasp spray gun with both hands when using high pressure spray to avoid injury when spray gun kicks back.

WARNING: Risk of Explosion



DO NOT spray flammable liquids.

WARNING: Fluid Injection



The high-pressure water that this equipment produces could cut through skin and its underlying tissues, resulting in serious injury and possible amputation.

- Spray gun traps high water pressure, even when motor is stopped and water is disconnected, which could result in serious injury.
- If cut by fluid, call physician immediately. DO NOT treat as a simple cut.
- DO NOT allow CHILDREN to operate pressure washer.
- NEVER repair high pressure hose. Replace it.
- NEVER repair leaking connections with sealant of any kind. Replace o-ring or seal.
- NEVER connect high pressure hose to nozzle extension.
- Keep high pressure hose connected to pump and spray gun while system is pressurized.
- ALWAYS point spray gun in safe direction, disengage trigger lock and squeeze spray gun trigger to release high pressure, after each use.
- DO NOT discharge stream at persons.
- DO NOT secure spray gun in open position.
- DO NOT leave spray gun unattended while machine is running.
- NEVER use a spray gun which does not have a trigger lock or trigger guard in place and in working order.
- Always be certain spray gun, nozzles and accessories are correctly attached.

WARNING: Projectile hazard



Risk of eye or bodily injury. Spray could splash back or propel objects resulting in serious injury.

- Always wear safety goggles marked to comply with ANSI Z87.1 when using or in vicinity of this equipment.
- Always wear protective clothing such as a long-sleeved shirt, long pants and close-toed shoes.
- NEVER operate pressure washer when barefoot or wearing sandals.

WARNING: Slip or Fall Hazard



Use of pressure washer could create slippery surfaces causing you to fall resulting in death or serious injury.

- Kickback from spray gun could cause you to fall resulting in death or serious injury.
- Operate pressure washer from a stable surface.
- The cleaning area should have adequate slopes and drainage to reduce the possibility of a fall due to slippery surfaces.
- Be extremely careful if you must use the pressure washer from a ladder, scaffolding, or any other similar location.
- Firmly grasp spray gun with both hands when using high pressure spray to avoid injury when spray gun kicks back.

⚠ WARNING

Risk of electrocution

1. Inspect cord before using. Do not use if the cord is damaged.
2. Keep all connections dry and off the ground.
3. Do not touch plug with wet hands.
4. Double-insulated—when servicing, use only identical replacement parts.
5. This product is provided with a ground fault circuit interrupter built into the power cord plug. If replacement of the plug or cord is needed, use only identical replacement parts.
6. Do not spray electrical apparatus or wiring.
7. Read instruction manual before using. Do not remove this tag.

⚠ **WARNING:** California Proposition 65

This product, the engine exhaust and other substances that may become airborne from its use contains chemicals, including lead, known to the State of California to cause cancer, birth defects, or other reproductive harm. Wash your hands after handling product.

CAUTION: Read Manual

Read the entire SAFETY section at the beginning of this manual including all text under subheadings therein before set-up or use of this product.

WARNING:

- If any parts are damaged or missing do not operate this product until the parts are replaced. Use of this product with damaged or missing parts could result in serious personal injury.
- Do not attempt to modify this product or create accessories not recommended for use with this product. Any such alteration or modification is misuse and could result in a hazardous condition leading to possible serious personal injury.

Know Your Pressure Washer

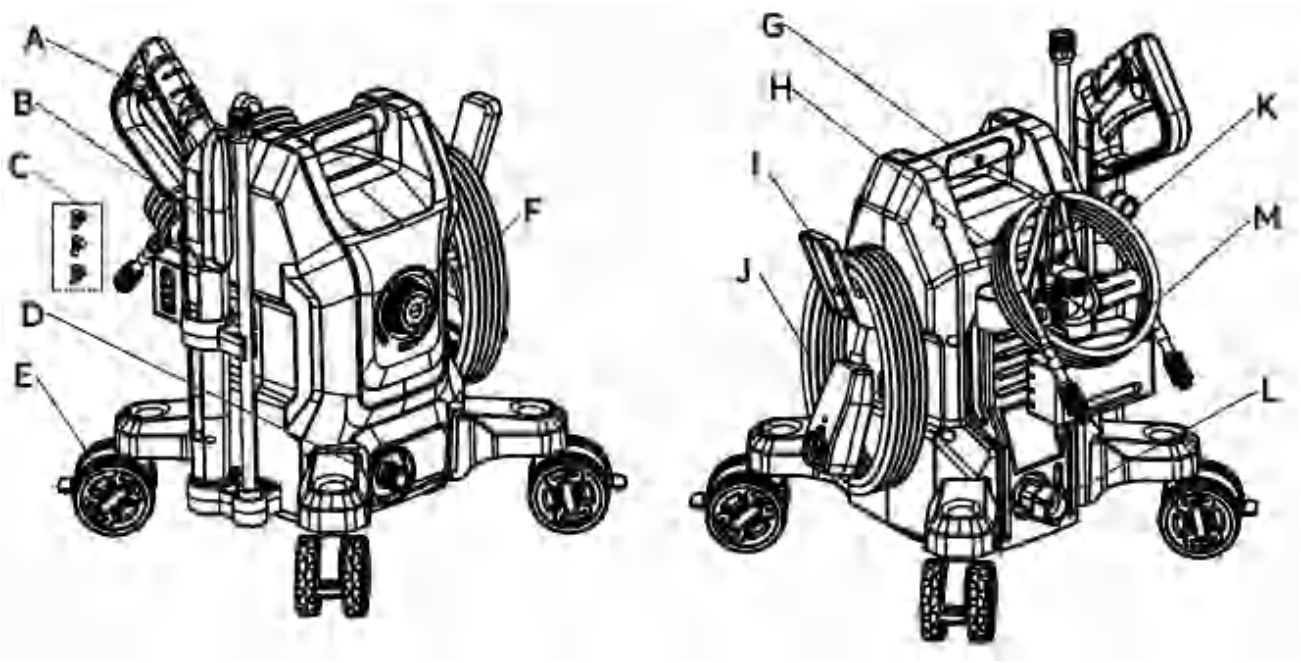

A - Spray wand
B - Trigger handle
C - Nozzle kit
D - Water outlet
E - Wheel
F - Start/Stop switch
G - Handle
H - High-pressure hose
I - Power cord holder
J - Power cord
K - Pressure hose connector
L - Water inlet
M - Soap cannon

Assembly

⚠ WARNING:

Do not connect the pressure washer to a power supply until it is fully assembled. To avoid accidental starting and possible serious injury, only connect a power supply when the pressure washer is ready for use.

This product requires assembly. Do not attempt to operate this product if any items in the INCLUDED LIST are already assembled when you remove the carton contents. These items are not assembled by the manufacturer and should require customer assembly. Using an improperly assembled product can be hazardous and could result in serious personal injury.

- Carefully cut down the sides of the packaging and remove the carton contents.
- Inspect the carton contents. verify that all the items in the INCLUDED LIST are present and undamaged.
- Recycle or dispose of the packaging materials properly.

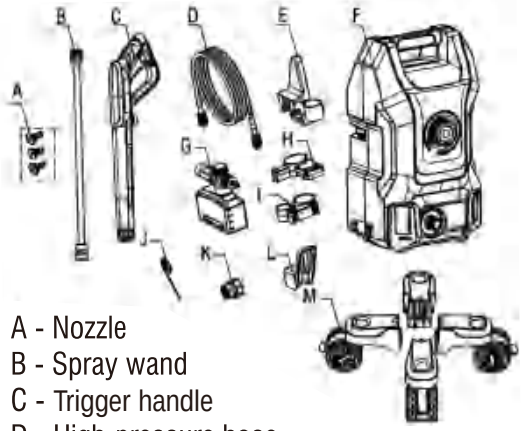

A - Nozzle
B - Spray wand
C - Trigger handle
D - High-pressure hose
E - Accessory hook
F - Pressure washer
G - Soap cannon
H - Trigger handle holder
I - Trigger handle holder base
J - Nozzle cleaning needle
K - Inlet adapter
L - Power cord holder
M - Wheel

Assembling The Pressure Washer

1. Hold the pressure washer unit at a slight angle.
2. Push the caster wheels into the slots until they snap into place.
3. Make sure the casters are secure, then return the unit to a fully upright position.

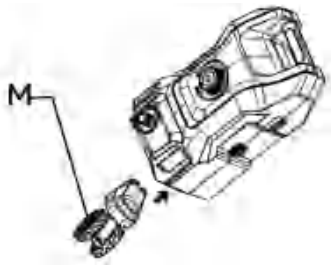

M - Wheel

4. Align the tabs on the upper and lower spray-gun holsters with the slots on the side and bottom of the pressure washer, then slide until they lock.

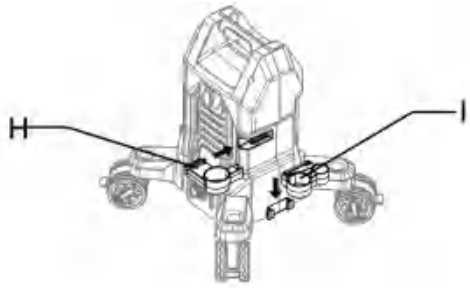

H - Trigger handle holder
I - Trigger handle holder base

5. Align the attachment hook with the back slot and slide it into place.

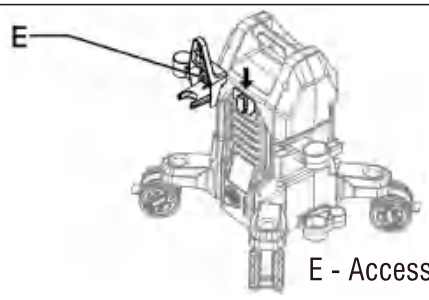

E - Accessory hook

6. Press the wire clip fully into the slot as shown.

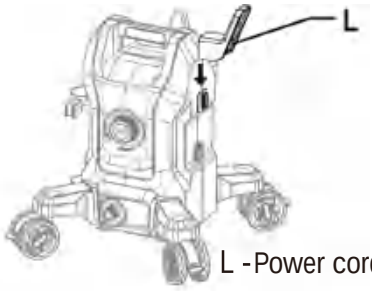

L -Power cord holder

Connecting The spray wand To The Spray Gun

1. Align the threads of the spray gun with the spray rod and tighten them securely.

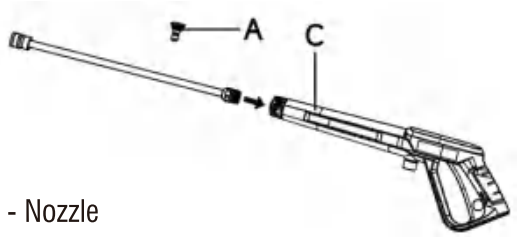

A - Nozzle
C - Trigger handle

Connecting The High-pressure Hose To The Spray Gun

1. Pull the collar of either end of the high-pressure hose backwards, and then firmly push the hose connector into the spray gun.
2. Screw the collar onto the spray gun and tighten it securely.

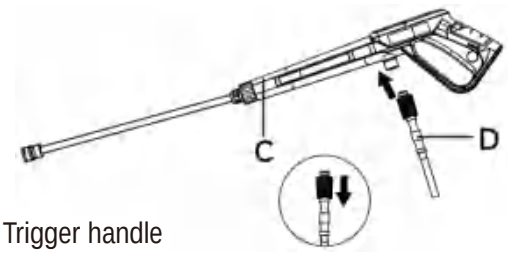

C - Trigger handle
D - High-pressure hose

Connecting The High-pressure Hose To The Pressure Washer

1. Pull the collar of the other end of the high-pressure hose backwards, and then firmly push the hose connector into the pressure washer. Screw the collar onto the joint and tighten it securely.

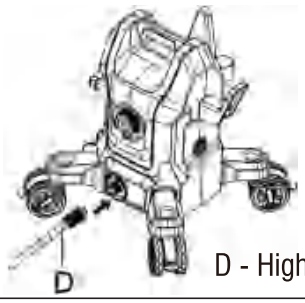

D - High-pressure hose

Connecting A Garden Hose To The Pressure Washer

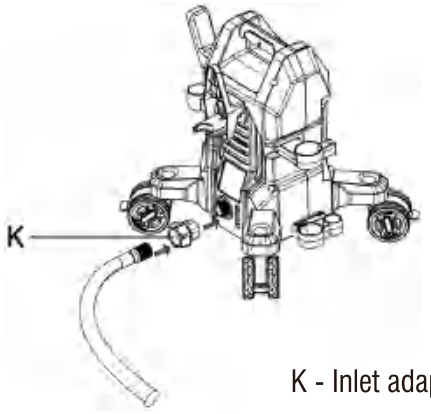

K - Inlet adapter

General Information

Water	Use only cold water. Do not operate pressure washer with clogged or missing water inlet filter screen. Do not operate pressure washer without adequate water supply.
Pressure Adjustment	Pressure setting is pre-set at factory.
High Pressure Pump	There are no serviceable parts to the high-pressure pump. Do not attempt to repair or service the pump, as you may damage it and void your warranty. If you feel that the pump needs service, please call our customer service department at 1-855-888-3598. Do not allow water to freeze in pump. If product is stored in an area that will have temperatures of below 32° F, 0°C, make sure all water is removed from the pump, or a suitable pump protection product has been used. Failure to protect the pump form cold temperatures will cause damage and possibly void your warranty.
High Pressure Hose	Be aware of the hose and its location while using the product. Don't allow the hose to get tangled or kink, as this can cause damage to the hose. DO NOT attempt to move unit by pulling on high-pressure hose.
Soap / Chemicals	Use only soaps and chemicals detergents designed for pressure washer use. Always follow detergent manufacturer's instructions on their container. DO NOT use bleach, acid, any flammable materials, or industrial solvents.
Nozzle	Always keep nozzles clean and unclogged. Use the nozzle needle to clean if clogged.
Storage / Winterizing	The pressure washer is equipped with places to store your accessories as shown in daigram on page 9. • Place spray gun into gun holder • Place nozzles in the proper panel. • Coil pressure hose and hang on hanger, or on reel if so equipped. Cover pressure washer and store on a cool dry location out of the reach of children. Do not store outside, or in an area exposed to rain or snow.

⚠ **CAUTION:** Cold storage location

- If product will be exposed to temperatures below 32° F / 0° C during storage, the use of a pump protection product (not included) is required. Use the pump protection product per the pump protection manufacturer's instructions.
- Failure to prepare the pump for exposure to cold temperature will cause damage to the pump and void your warranty.

⚠WARNING

Do not alter or modify this product unless instructed to do so in this manual or by the manufacturer. Do not use attachments or accessories that are not recommended for use with this product. Making unauthorized modifications and using incompatible accessories can damage the unit and may void your warranty.

⚠WARNING

ALWAYS wear eye protection to prevent injury to eyes when operating the pressure washer.

⚠WARNING

NEVER spray directly at a person, animal, electrical device, or the unit itself. Failure to heed this warning could will result in damage or serious injury.

STARTING AND STOPPING THE PRESSURE WASHER

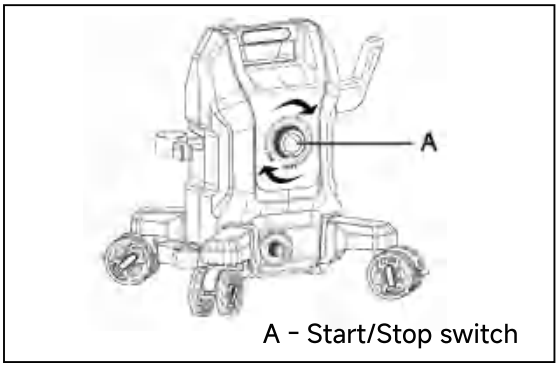

A - Start/Stop switch

- Connect a garden hose as described previously and turn the water on.

NOTICE: ALWAYS turn the water supply “ON” before turning the pressure washer power to “ON”. Running the pump dry of water will cause damage to the internal components and render the pressure washer inoperable.

- Connect a garden hose and turn the water on.
- Completely unwind the power cord and connect it to a grounded 120-volt outlet.

⚠WARNING

Keep all connections dry and off the ground. Do not touch the plug with wet hands.

- Hold the spray gun with both hands and point the lance in a safe direction.
- Turn the Start/Stop switch to ON to start and to OFF to stop. The unit will run for several seconds and shut off. This is a normal function of the auto-start feature, the unit will restart when the trigger is pulled.
- Turn the switch clockwise/counterclockwise again to stop/start the pressure washer.
- When you stop the pressure washer, water pressure may remain in the system. Point the spray gun in a safe direction and pull the trigger to release the water pressure.

USING THE SPRAY GUN

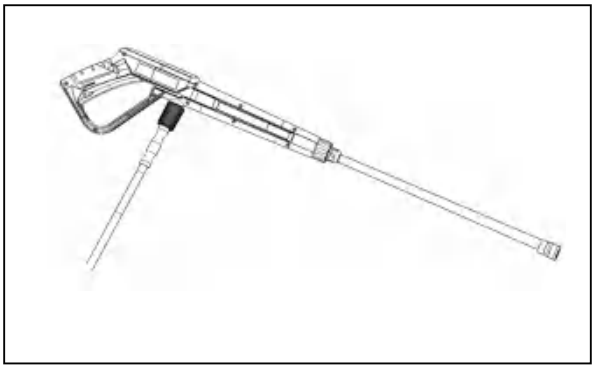

⚠WARNING

Hold the spray gun and lance with two hands (one hand to pull the trigger and the other to stabilize the gun) until you get used to the 'recoil'. Do not lose control of the spray gun doing so could result in injury to yourself and others.

- Start the pressure washer.
- Release the safety lock by pushing it down into the slot in the trigger.
- Squeeze and hold the trigger to start the flow of water.
- Release the trigger to stop the flow of water.
- Lock the trigger by pushing it up to its original position.

NOTE: Squeeze the trigger to make sure it’s locked and will not move. ALWAYS keep the spray gun locked when it’s not in use.

INSTALLING NOZZLES

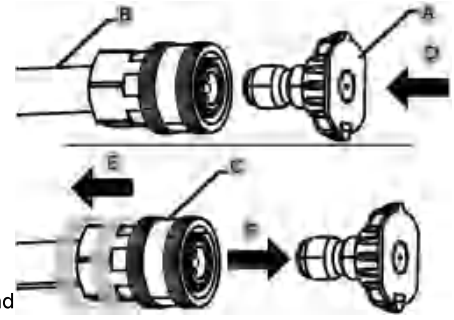

A - Nozzle
B - Spray wand
C - Quick-connect coupler
D - Install nozzle vertically
E AND F - Pull back the quick-connect spray wand coupler to remove the nozzle

⚠WARNING

ALWAYS turn off the pressure washer, release the pressure in the spray gun, and lock the trigger before removing or installing a nozzle. NEVER point the lance at your face. Failure to heed this warning could result in serious injury.

- Stop the pressure washer and turn the water faucet completely off.
- Point the spray gun in a safe direction and pull the trigger to release the water pressure.
- Lock the trigger.
- Push the nozzle into the lance until it clicks into place and is secure. To remove the nozzle, pull the collar back and move the nozzle away from the lance.

OPERATION TIP

- Fill the soap bottle with a properly formulated detergent to water ratio, following the detergent manufacturer's instructions.

NOTE: Use detergents designed for pressure washers. The detergent should be the consistency of water. DO NOT use thick, gel-like detergents, as they will clog the pressure washer and may cause damage.

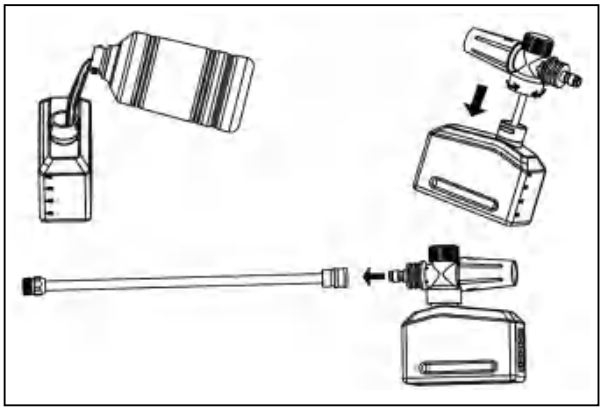

- Turn to open the top of the soap bottle nozzle, slowly pour in the detergent, and then tighten it securely.
- Attach the soap bottle nozzle to the spray gun.
- Turn the water on and start the pressure washer.
- Squeeze the trigger and wait several seconds for detergent to appear in the water stream.
- Start cleaning at the bottom of the surface and work your way up in a side-to-side motion. Do not allow soap to dry on the surface being cleaned.

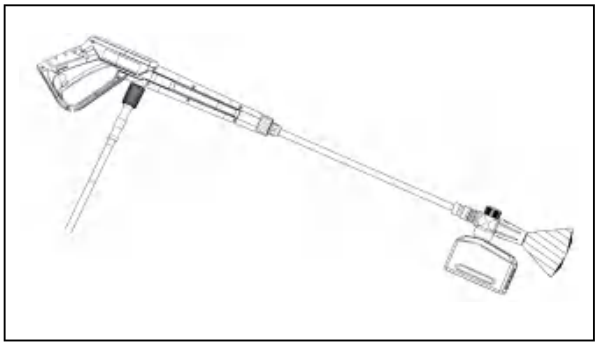

- Release the trigger to stop the flow of water. The unit may automatically stop the motor.
- Allow the motor to come to a complete stop before squeezing the trigger again.

NOTE: Rapidly cycling the trigger may interrupt the auto-start/auto-stop. Use slow, deliberate trigger pulls.

When you are finished, remove excess detergent from the soap bottle and fill it with clean water. Spray the water through the soap nozzle to flush the system.

To clean without detergent:

- Stop the pressure washer and turn the water faucet completely off.
- Point the spray gun in a safe direction and pull the trigger to release the water pressure.
- If installed, remove the soap nozzle.
- Install an appropriate nozzle for the task you are performing.
- Turn the water on and start the pressure washer.
- Release the safety lock and begin pressure washing by squeezing the trigger all the way into the handle.

NOTE: Always test in a small inconspicuous area to avoid or reduce damage.

- Start cleaning at the bottom of the surface and work your way up in a side-to-side motion.

OPERATING TIPS

- It is normal to hear the motor run intermittently when the trigger is not being squeezed. The pump is priming itself to operate when the trigger is squeezed again.
- To avoid damaging surfaces:
  + Always use an appropriate nozzle.
  + Reduce water pressure by adjusting the angle of the stream or by increasing the distance from the nozzle to the surface.
- Always spray detergent on a dry surface. Do not pre-soak the surface. Wetting the surface first dilutes the detergent and reduces its cleaning ability.
- For tough stains, it may be necessary to reapply the detergent and use a bristled brush to scrub the stain.

⚠WARNING

ALWAYS turn off the pressure washer, release the pressure in the spray gun, and unplug the pressure washer before performing maintenance.

⚠WARNING

Replace damaged or worn items with recommended or equivalent replacement parts. Using an incorrect or incompatible part might create a hazard that could result in serious personal injury.

NOTICE

Check the physical condition of the product prior to each use. Look for loose bolts, fluid leaks, and other signs of wear. Replace all damaged items. For replacement parts or assistance, contact our customer service team.

To prolong the life of this product, follow the care and maintenance instructions in this section. Contact customer service before servicing any warranty parts.

CLEANING THE PRESSURE WASHER

Do not store or operate your pressure washer in dirty, dusty, or corrosive environments. Do not allow foreign materials and debris to clog the vents on the unit.

NEVER clean the pressure washer with a garden hose. Water can damage the pressure washer's electrical components. If the unit needs to be cleaned, use a soft brush and damp cloth to clean the exterior and use low-pressure air (≤ 25 psi) to clean the vents.

Never use gasoline as a cleaning agent.

NOZZLE	GENERAL USE
 0° (Red)	High Pressure. Use to clean concrete, remove tough stains, and strip paint. Use with caution.
 25° (Green)	Moderate pressure. Safe to use on brick and paver patios.
 40° (White)	Low pressure. Safe for cars, windows, and decks

CLEANING THE NOZZLES

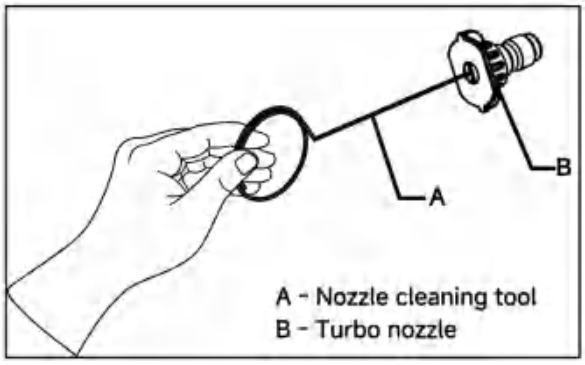

- Stop the pressure washer and turn the water faucet completely off.
- Release the pressure in the spray gun and unplug the pressure washer.
- Remove the nozzle from the spray gun.
- Use a nozzle cleaning tool or fine needle to clean debris from the inside of the nozzle.
- Using a garden hose, back flush water through the nozzle.
- When the nozzle is clean, place it back on the lance or in the nozzle storage area.

CLEANING THE WATER INLET SCREENS

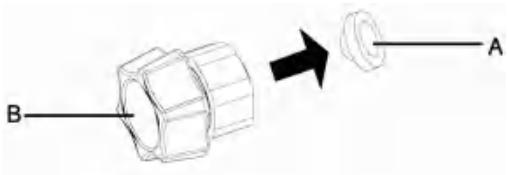

A - O-ring
B - Water inlet filter screen

Clean the screens inside the garden-hose adapter periodically. Remove the screens, rinse them with clean water, and place them back in the inlet.

Trouble Shooting

PROBLEM	POSSIBLE CAUSE	POSSIBLE SOLUTION
Motor will not start.	On/Off switch is in the “OFF” (O) position.	Set switch to the “ON” (|) position.
	Power cord is not plugged in.	Plug in power cord.
	Electrical outlet does not supply adequate power.	Try a different outlet.
	Tripped pressure washer circuit breaker.	Allow to cool, and restart unit.
	Power switch is ON however gun trigger is not squeezed ON.	With power switch ON, squeeze the gun trigger which will engage the AUTO ON switch.
Unit does not reach high pressure.	Diameter of garden hose is too small.	Replace with a 1” (25 mm) or 5/8” (16 mm) garden hose.
	Water supply is restricted.	Check garden hose for kinks, leaks and blockage.
	Not enough water supply.	Open water source fully.
	Pressure Tip has not been installed on wand assembly.	Add desired pressure tip to end of wand.
	Water inlet filter is clogged	Remove filter and rinse with clean water.
Output pressure varies from high to low	Not enough inlet water supply.	Turn water on fully. Check garden hose for kinks, leaks or blockage.
	Pump is sucking air.	Check that all hoses and fittings are tight. Turn product OFF and purge air from pump by squeezing the trigger until a steady stream of clean water flows from the spray tip.
	Water inlet filter is clogged	Remove filter and rinse with clean water.
	Supply voltage below minimum.	Verify that only the pressure washer is running on this circuit.

Trouble Shooting Continued

PROBLEM	POSSIBLE CAUSE	POSSIBLE SOLUTION
Motor buzzes but fails to run.	Supply voltage below minimum.	Verify that only the pressure washer is running on this circuit.
	System has residual pressure.	Turn unit “OFF”, squeeze trigger on spray wand to release pressure, then turn unit “ON”.
	Voltage loss due to extension cord.	Unplug any extension cords attached and plug the unit directly into the outlet.
	Pressure washer not used for long periods.	Call customer service.
	Residual friction among components. Unit might hum.	Disconnect water supply and power ON for 2 to 3 seconds, repeat couple times or until the motor starts.
No water.	Water supply is OFF.	Turn ON water supply
	Kink in the garden hose.	Remove kink in garden hose.
No Detergent	Soap injector hose is not properly submerged into the detergent.	Make sure hose is properly submerged.
Wand Leaks	O-ring damaged	Replace o-ring. If this does not correct the issue, call our toll free customer service department at 1-855-888-3598

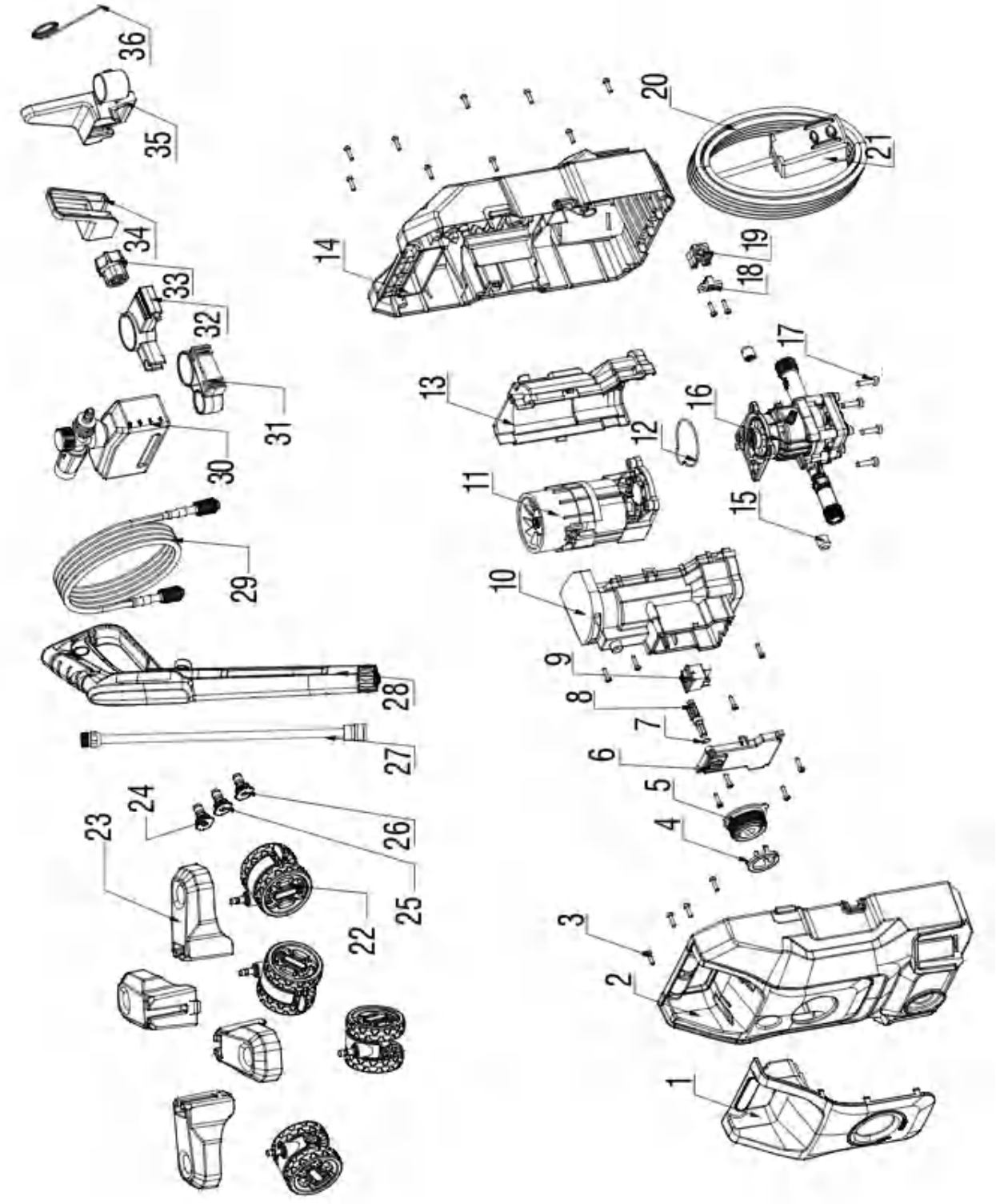
36
35
34
33
32
31
30
29
28
27
24
23
26
25
22
20
21
14
19
18
17
13
16
12
11
15
10
9
8
7
6
5
4
3
2
1

Parts List

NO.	Part Number	Description	Qty.
1	33013-02450-00	Decorative cover	1
2	33013-02448-00	Front shell	1
3	30117-00122-00	Screw(ST5.5*19)	23
4	33708-00111-00	Knob decorative cover	1
5	31026-00811-00	Switch knob	1
6	20187-00046-00	Switch box cover	1
7	30152-00603-00	O-ring	1
8	31026-00810-00	Switch lever	1
9	31026-00719-00	Switch	1
10	34021-00835-00	Upper cover of motor hood	1
11	20261-00556-00	Universal motor	1
12	30152-00605-00	O-ring	1
13	34021-00836-00	Lower cover of motor hood	1
14	33013-02449-00	Rear case	1
15	34030-00343-00	Shock-absorbing pad	2
16	20100-00861-00	Pump assembly	1
17	30117-00122-00	Screw(ST5.5*19)	4
18	33593-00855-00	Wire crimping plate	1
19	33593-00856-00	Cord lock	1
20	20196-07076-00	Wire harness components	1
21	31033-00290-00	Plug	1
22	20134-00548-01	Universal Wheel Assembly	4
23	33013-02451-00	Wheel carrier	4
24	34036-00222-00	0° nozzle	1
25	34036-00224-00	25° nozzle	1
26	34036-00225-00	40° nozzle	1
27	20092-00055-00	Spray wand	1
28	20091-00065-00	Trigger handle	1
29	20048-00187-00	High-pressure hose	1
30	70010-04486-01	Foam kettle assembly	1
31	34035-00084-00	Gun rack base	1
32	34035-00085-00	Gun holster storage	1
33	70009-00860-00	Inlet union nut	1
34	33624-00688-00	Wire hanging	1
35	33624-00689-00	Attachment hook	1
36	70003-04614-00	Nozzle cleaning needle	1

LIMITED WARRANTY

KEEP YOUR RECEIPT.
Proof of purchase will be required to substantiate any warranty claim.

WHAT IS COVERED:
AiPower Corp. warrants to the original retail purchaser in the United States of America, or Canada that this product is free of defects in material and workmanship and agrees, at AiPower Corp'.s direction, to either repair, provide replacement parts for, or replace (without charge for parts or labor) any product or component with a material defect for a period of 2 years from the date of purchase, except as limited below. Warranty service and replacement parts are warranted only for the duration of the warranty on the original product. All replaced parts or products become a property of AiPower Corp. This product is also covered by an Emissions Control System Warranty which is separate from and in addition to the warranty.

Warranty

AiPower Limited Warranty – 2 Years Residential
2 year Residential warranty applies as follow: 1st year Parts & Labor / 2nd year Parts ONLY
Thank you for choosing AiPower products. To ensure proper registration of your product warranty, please submit your warranty registration along with proof of purchase within 10 days of the date of purchase, this can be done by:

A. Completing the Warranty Registration form at the back of this manual and mailing to:

   AIPOWER CORP.
   10887 COMMERCE WAY UNIT A
   FONTANA CA 92337 USA

B. Visit us at www.aipower.com and click the product registration icon.

Warranty Term
AiPower will provide warranty for any of its products purchased through any authorized AiPower dealer in North America to the original purchaser and will be warranted against defects in material or workmanship for a period of two (2) years for Consumer use from date of purchase, subject to exclusions noted herein. Commercial and Rental applications are warranted for a period of one (1) year from date of purchase.

"Consumer Use" – residential household use by a retail consumer
"Commercial Use" – all other use – commercial , business, industrial, or rental purpose.

How to Obtain Warranty Service
Please call our Customer Service Dept. 855-888-3598 or e-mail to support@aipower.com
Please have necessary information available – Model Number, Serial Number, Proof of Purchase.

DO NOT RETURN THE PRODUCT TO THE PLACE OF PURCHASE

AiPower Customer Service Dept. will assist with all product related questions and will help troubleshoot issues and will send any replacement parts as necessary while product is within the warranty period at no charge. If the issue cannot be resolved then AiPower Customer Service Dept. at its discretion determine and authorize diagnosis and repair through one of its authorized Service Centers. AiPower Corp. at its discretion may choose to provide replace of part, component, or product. Service or replacement of parts at any unauthorized repair facility without prior authorization will not be covered by this warranty.

Warranty Exclusions
This warranty does not cover the following:

Regular wear and maintenance – this warranty will not cover repair when normal use has exhausted the lifetime of a part(s) or engine.

Installation and Maintenance - this warranty does not cover improper or unauthorized assembly, alteration, modification or any other damage resulting from misuse or neglect.

Normal maintenance parts - this warranty does not cover spark plugs, air filters, adjustments, or other related service due to obstructions and other build ups resulting from improper maintenance

Additional exclusions – this warranty does not cover wearable parts such as filers, spark plugs , o-rings, batteries etc. It does not cover any cosmetic defects such as scratches to paint, decals etc. It does not cover any damage resulting from use of non-original manufacturer's parts, use of after-market parts. It does not cover any failures due to acts of God and other force majeure events beyond the control of the manufacturer.

Warranty limits and Implications and Consequential Damages
AiPower is not obligated to cover any loss of time, use of product, freight cost, or any other incidental or consequential claim from the use of this product. This warranty is in Lieu of all other warranties, express or implied
This warranty gives you specific legal rights which vary from state to state.

MERCHANDISE RETURN GUIDELINES

- All products must be returned in original or equivalent packaging. Improperly packaged returns will not be accepted.
- Must have adequate packing for transportation
- Federal Law requires that all machines that utilize gasoline, oil, or other flammable liquids must be drained Completely & Thoroughly prior to shipment.
- Gas caps and oil plugs must be left off for 24 hours prior to shipping. Please note: liability for this violation of the law resides with the sender of the shipment.
- Return to address provided in return authorization, using the parcel service required. Units returned without authorization will not be honored.
- Please Note: Refunds will not be granted for items that have been modified or damaged by abuse or usage not in accordance with product instructions.



Fontana, CA 92337 USA
Phone: 1-855-888-3598
support@aipower.com
www.aipower.com

A-iPOWER WARRANTY REGISTRATION FORM

Register your product by emailing this form to support@aipower.com or register on-line at: www.aipower.com.

Registering your product is important , it provides the following protections:

1. You have record of product purchased
2. Customer Service can Better serve you for Warranty related issues
3. We can contact you in the unlikely event should notification is necessary

Customer Information:

Name: _____
Phone: _____
E-mail: _____
Address: _____
City, State: _____
Zip code: _____
Purchase Date: _____

Product Information:

Serial #

Model #

The serial No. can be found on the engine.
PLEASE NOTE: Your product cannot be registered without model & serial numbers.

1.THE PRODUCT WAS PURCHASED FOR: A.❑ Residential cleaning

B. ❑ Other _____

2.THIS PRODUCT IS A: (select one)

A.❑ First time purchase B. ❑ Replacement

3.HOW DID YOU FIRST LEARN OF THIS PRODUCT: (select one)

A. ❑ Radio
B. ❑ Store Display
C. ❑ Contractor
D. ❑ Trade Show
G. ❑ Direct Mail
H. ❑ From Friend/Relative/Neighbor
I. ❑ Internet
J. ❑ Other _____

4. PLEASE RATE THE FOLLOWING:	Completly Satisfied 5	4	3	2	Not at all Satisfied 1
Product Value for Price Paid	❑	❑	❑	❑	❑
Performance	❑	❑	❑	❑	❑
Features	❑	❑	❑	❑	❑
Product Appearance	❑	❑	❑	❑	❑
Warranty	❑	❑	❑	❑	❑
Ease of Maintenance	❑	❑	❑	❑	❑
Noise Level	❑	❑	❑	❑	❑

5 . HOW LIKELY ARE YOU TO RECOMMEND A-iPOWER TO FAMILY OR FRIENDS?

Extremely Likely 5	4	3	2	Not Likely at all 1
❑	❑	❑	❑	❑

Privacy Statement: A-ipower is committed to respecting your privacy and to complying with the regulations regarding the protection of personal data. The survey data we collect is for the purposes of marketing or product support and demographic information about the entire audience registering their products.

Fontana, CA 92337 USA
Phone: 1-855-888-3598
support@aipower.com
www.aipower.com