iPOWER™

GASOLINE LAWN MOWER OWNER'S MANUAL

LMSD1-LWP-B

LM2N1-HWP

LM3N1-HWP10

LM3N1-SPR10

LM3N1-SPR-T10



IMPORTANT

These instructions are for your safety. Please read through them thoroughly prior to handling the product and retain them for future reference.

Contents

Safety 1

Technical specification 7

Before you start 8

Functions & Settings 12

Operation 16

Care and maintenance 19

Guarantee 25

SAFETY

Safety warnings

Gasoline powered lawnmowers safety warnings.



IMPORTANT



Read carefully before use.
Keep for future reference.



WARNING! Your safety and the safety of others is very important. Of course, it is not practical or possible to warn you about all the hazards associated with operating or maintaining this product. At all times you must use your own good judgment.

Training

1. Read the instructions carefully. Be familiar with the controls and the proper use of the product.
2. Never allow children or people unfamiliar with these instructions to use the product. Local regulations can restrict the age of the operator.
3. Never mow while people, especially children, or pets are nearby.
4. Keep in mind that the operator or user is responsible for accidents or hazards occurring to other people or their property.
5. The operators must receive proper training in the use, adjustment and operation of the product, including prohibited operations.

Preparation

1. While mowing, always wear substantial footwear and long trousers. Do not operate the product when barefoot or wearing open sandals.
2. Thoroughly inspect the area where the product is to be used and remove all objects which can be thrown by the product.



WARNING: Gasoline is highly flammable.

- Store fuel in containers specifically designed for this purpose.
- Refuel outdoors only and do not smoke while refueling.
- Add fuel before starting the engine. Never remove the cap of the fuel tank or add gasoline while the engine is running or when the engine is hot.
- If gasoline is spilled, do not attempt to start the engine but move the product away from the area of spillage and avoid creating any source of ignition until gasoline vapor have dissipated.
- Replace all fuel tank and container caps securely.

3. Replace faulty muffler.
4. Before using, always visually inspect to see that the cutting devices, cutting device bolts and cutter assembly are not worn or damaged. Replace worn or damaged cutting devices and bolts in sets to preserve balance.



CAUTION: Do not touch rotating cutting device.

5. Engine brake (brake lever (3)): Use the brake lever (3) to stop the engine. When you release the brake lever (3), the engine and the blade stop automatically in a few seconds. To mow, hold the brake lever (3) in the working position. Before you start to mow, check the brake lever (3) several times to be sure that it is working properly. Ensure that the brake wire (6) can be smoothly operated (i.e. is not catching or kinking in any way).

Operation

1. Do not operate the engine in a confined space where dangerous carbon monoxide fumes can collect.
2. Mow only in daylight or in good artificial light.
3. Do not operate the product when there is a risk for lightning.
4. Do not operate the product while being tired, ill or under the influence of alcohol or drugs.
5. Avoid operating the product in wet grass, where feasible.

6. Always be sure of your footing on slopes.
7. Walk, never run.
8. Mow across the face of slopes, never up and down.
9. Exercise extreme caution when changing direction on slopes.
10. Do not mow excessively steep slopes near drop-offs, ditches or embankments.
11. Avoid using the product in bad weather conditions especially when there is a risk of lightning.
12. Use extreme caution when reversing or pulling the product towards you.
13. Stop the cutting device(s) if the product has to be tilted for transportation when crossing surfaces other than grass, and when transporting the product to and from the area to be mowed.
14. Never operate the product with deflectors guards, shields, or without safety devices, for example defectors, self-closing discharge opening guard and/or grass catchers, in place.
15. Do not change the engine governor settings or overspeed the engine.
16. Do not alter or tamper with any sealed adjustments for the engine speed control.
17. Do not tamper or disable any product's safety systems or features.
18. Ensure and regularly check that all starting interlocks and operator presence controls are properly functioning.
19. Stop the product according to instructions in this manual before leaving the operator's position and park it in a safe location.
20. Start the engine or switch on the engine carefully according to instructions and with feet well away from the cutting device(s).
21. Do not tilt the product when starting the engine or switching on the engine, except if the product has to be tilted for starting. In this case, do not tilt it more than absolutely necessary and lift only the part which is away from the operator. Always ensure that both hands are in the operating position before returning the appliance to the ground.
22. Keep hands and feet away from the cutting means at all times and especially when switching on the engine.
23. Do not put hands or feet near or under rotating parts. Keep clear of the discharge opening at all times.
24. Never pick up or carry a product while the engine is running.
25. In case of any situation mentioned below, stop the engine and disconnect the spark plug connector, make sure that all moving parts have come to a complete stop and, where a key is fitted remove the key:
    - before clearing blockages or unclogging chute,
    - before checking, cleaning or working on the product,
    - after striking a foreign object. Inspect the product for damage and make repairs before restarting and operating the product,
    - if the product starts to vibrate abnormally (check immediately).
      > inspect for damage
      > replace or repair any damaged parts
      > check for and tighten any loose parts
    - whenever you leave the product,
    - before refueling.
26. Never touch the exhaust, exhaust guard or cooling fins when the engine is hot.
27. Never carelessly touch hot parts of the product, you can burn yourself. While the product is in operation or shortly thereafter, its parts such as the exhaust pipe, engine, and other surfaces are extremely hot! Pay attention to the markings on the product.
28. Make sure that the air vents of the combustion engine are clear. Keep the air vents free of dust, dirt particles, gases and fumes.
29. Never start or run the engine indoors. The exhaust fumes are dangerous, containing carbon monoxide, an odorless and deadly gas. Operate this product only in well ventilated outdoor areas.

Maintenance and storage

1. Follow the maintenance and repair instructions for this product. Never carry out any modifications of the product. Never change the pre-set rotary speed or the engine and product settings. Information about maintenance and repair is provided in this user manual.
2. Keep all nuts, bolts and screws tight to ensure the product is in safe working condition.

3. Improper maintenance, using non-genuine parts, or removing / modifying safety components may lead to malfunction / failure of the product and injury of operators. Many accidents are caused by poorly maintained products.
4. Never store the product with gasoline in the tank inside a building where fumes can reach an open flame or spark.
5. To reduce the fire hazard, keep the engine, muffler and gasoline storage area free of grass, leaves, or excessive grease to reduce the fire hazard.
6. Allow the engine to cool before storing in any enclosure. Clean and maintain the product before storage.
7. Check the grass catcher frequently for wear or deterioration.
8. If the fuel tank has to be drained, this should be done outdoors.
9. Wear strong work gloves when removing and re-assembling the cutting device.
10. Replace worn or damaged parts for safety. Use only the genuine replacement parts and spare parts.
11. Ensure that only replace the recommended cutting means (blade) with the right type.

Fuel handling

1. Before refueling, stop the engine, disconnect the spark plug connector and let the product cool. Fuel and fuel vapors are highly flammable. Take care when handling fuel. Never smoke when you are refueling the product. Do not refuel the product, if there is an open fire in the vicinity!
2. Always use suitable aids such as funnels and filler necks. Do not spill any fuel on the product or its exhaust system. There is a risk of ignition. However, if fuel should be spilled, then you must remove it carefully from all parts of the product. Any residue which may be present must be completely removed, before the product is operated!
3. Never refuel indoors. Exhaust gases and fuel fumes are noxious.
4. Never use the product in environments where there is a risk of explosion. Fuel fumes can ignite.
5. Never breathe in any fuel fumes, when you are refueling the product. Never fill the tank in enclosed spaces, such as basements or sheds. There is a risk of poisoning and explosion!
6. Avoid skin contact with gasoline.
7. Do not eat or drink, while you are refueling the product. If you have swallowed gasoline or oil, or if gasoline or oil has got into your eyes, then seek medical advice immediately.
8. Close the fuel tank cap immediately after filling the fuel tank. Make sure that it is properly closed.
9. Never use the product without an air filter.
10. Fuel vapor pressure may build up inside the fuel tank depending on the fuel used, weather conditions and the tank venting system. To reduce the risk of burns and other personal injuries, remove the fuel cap carefully to allow any pressure build up to release slowly.
11. Be aware of fire risks, explosion and inhalation risks.
12. Do not smoke while operating the product, handling fuel or near fuel.
13. Ensure the spark plug lead is secured; a loose lead may cause electrical arcing that could ignite combustible fumes and cause a fire or explosion.
14. Check regularly for leaks from the fuel cap and fuel lines.
15. Do use caution when handling fuel. To avoid any accidental fires, move the product at least 3 metres (10') from the fuelling point before starting the engine.
16. Tighten the fuel tank cap thoroughly after refilling the fuel tank.
17. Do not operate the product if it is leaking fuel. Do not remove the fuel tank cap while the engine is running.
18. Use only an approved container for this purpose.
19. Do not store cans of fuel or refill the fuel tank in any place where there is a boiler, stove, wood fire, electrical sparks, welding sparks, or other sources of heat or fire which might ignite the fuel.
20. If any fuel spillage occurs during refueling, use a dry rag to wipe up spills and allow remaining fuel to evaporate before turning the engine on again.
21. If you have spilt fuel on yourself or on your clothes, change your clothes and wash any

part of your body that has come in contact with fuel before turning the engine on again.

22. If fuel is ignited, put out the fire with a dry powder fire extinguisher.
23. If the fuel tank is drained, this should be done outdoors.

Vibration and noise reduction

To reduce the impact of noise and vibration emission, limit the time of operation, use low-vibration and low-noise operating modes as well as wear personal protective equipment.

Take the following points into account to minimise the vibration and noise exposure risks:

1. Only use the product as intended by its design and these instructions.
2. Ensure that the product is in good condition and well maintained.
3. Use correct accessories for the product and ensure they in good condition.
4. Keep tight grip on the handles/grip surface.
5. Maintain this product in accordance with these instructions and keep it well lubricated (where appropriate).
6. Plan your work schedule to spread any high vibration tool use across a longer period of time.

Emergency

Familiarize yourself with the use of this product by means of this instruction manual. Memorise the safety directions and follow them to the letter. This will help to prevent risks and hazards.

1. Always be alert when using this product, so that you can recognise and handle risks early. Fast intervention can prevent serious injury and damage to property.
2. Stop the engine and disconnect the spark plug connector if there are malfunctions. Have the product checked by a qualified professional and repaired, if necessary, before you operate it again.
3. In case of fire, stop the engine and disconnect the spark plug connector.Take fire-extinguishing measures immediately if the product switch is no longer accessible.



WARNING! Never use water to extinguish a product on fire. Burning fuel must be extinguished with special extinguishing agents! We recommend that you keep a suitable fire extinguisher within reach in your work area!

Residual risks

Even if you are operating this product in accordance with all the safety requirements, potential risks of injury and damage remain. The following dangers can arise in connection with the structure and design of this product:

1. Health defects resulting from vibration emission if the product is being used over long periods of time or not adequately managed and properly maintained.
2. Injuries and damage to property due to broken application tools or the sudden impact of hidden objects during use.
3. Danger of injury and property damage caused by flying objects.
4. Burns, if touching hot surfaces.



WARNING! This product produces an electromagnetic field during operation! This field may under some circumstances interfere with active or passive medical implants! To reduce the risk of serious or fatal injury, we recommend persons with medical implants to consult their doctor and the medical implant manufacturer before operating this product!!

Symbols

On the product, the rating label and within these instructions you will find among others the following symbols and abbreviations. Familiarize yourself with them to reduce hazards like personal injuries and damage to property.

kW	Kilowatt	ml	Milliliter
cm^3	Cubic centimeter	g/kWh	Gram per kilowatt per hour
/min or min-1	Per minute	kg/h	Kilogram per hour
mm	Millimeter	°C	Degree Celsius
cm	Centimeter	dB(A)	Decibel (A-rated)
kg	Kilogram	m/s2	Meters per second squared
L	Liter		
yyWxx	Manufacturing date code; year of manufacturing (20yy) and week of manufacturing (Wxx)		

	Lock / to tighten or secure		Unlock / to loosen
	**CAUTION! / WARNING! / DANGER!**		Read the instruction manual
	**NOTE:**		Wear hearing protection. Wear eye protection.
	Wear respiratory protection.		Wear protective gloves.
	Wear protective, slip-resistant footwear.		Wear tight-fitted protective clothes.
	Do not expose the product to rain or wet conditions.		Risk of fire / flammable materials
	Keep hands and feet away.		Only refuel unleaded gasoline!
	Add engine oil.		Check and refill oil.
	Open flames in the work area, around the product and in the vicinity of flammable materials are prohibited!		
	Do not smoke in the work area, around the product and in the vicinity of flammable materials!		
	Hot surface, do not touch! High temperatures on the product's surfaces and structural parts that could cause burns, if they are touched. The product can also stay hot for a longer period of time after operation!		
	This product produces noxious exhaust fumes. If the product is used improperly, these fumes can lead to poisoning, a loss of consciousness or death!		
	Noxious exhaust fumes; do not operate or start the product in indoor rooms!		
	Switch the engine off while you are refilling the tanks! Fuel is flammable, keep fire away. Do not add fuel with running engine		
	Mow across the face of slopes, never up and down.		
	Inspect the area where the product is to be used and remove all objects which can be thrown by the product. If objects are hidden while operating, stop the engine and remove the object.		

	Keep hands and feet away from sharp rotating parts – danger of injury! When cleaning, repairing, or inspecting, make certain the cutting device and all mowing parts have stopped. Disconnect the spark plug connector, and keep the connector away from the plug to prevent accidental starting.
	Stop the engine and disconnect the spark plug connector before assembly, cleaning, adjustments, maintenance, storage and transportation.
	Cutting device continues to rotate after the product is switched off. Wait until all machine components have completely stopped before touching the product.
	Pay special attention when working on the cutting device!
	Objects thrown by the product could hit the user or other bystanders. Always ensure that other people and pets remain at a safe distance from the product when it is in operation. In general, children must not come near the area where the product is.
	Release the brake lever (3) to stop the engine and blade.
	Push the Some models are equipped with a self-propelled function (1) forward to engage the wheels.
	Engine manual start; recoil starter.
	When the hatch (26g) is opened, the grass catcher has sufficient volume left to collect grass; When the hatch (26g) is closed, the grass catcher is full and must be emptied.
	Guaranteed sound power level value in 98dB

TECHNICAL SPECIFICATIONS

Model	LMSD1-LWP-B	LM2N1-HWP	LM3N1-HWP10
Power	125 cc	125 cc	140 cc
RPM	3100 rpm	3100 rpm	3100 rpm
Cutting width	21 in	21 in	22 in
Engine type	SAE 10W-30	SAE 10W-30	SAE 10W-30
Oil type	Single cylinder,4-stroke, air cooled, OHV, Recoil start	Single cylinder,4-stroke, air cooled, OHV, Recoil start	Single cylinder,4-stroke, air cooled, OHV, Recoil start
Deck Material	Steel	Steel	Steel
Grass Catcher	NO	NO	Soft bag

Model	LM3N1-SPR10	LM3N1-SPR-T10
Power	140 cc	140 cc
RPM	3100 rpm	3100 rpm
Cutting width	22 in	22 in
Engine type	SAE 10W-30	SAE 10W-30
Oil type	Single cylinder,4-stroke, air cooled, OHV, Recoil start	Single cylinder,4-stroke, air cooled, OHV, Recoil start
Deck Material	Steel	Steel
Grass Catcher	Soft bag	Hard bag

BEFORE YOU START

Unpacking

NOTE: The product is heavy, ask another person for assistance if required.

1. Unpack all parts and lay them on a flat, stable surface.
2. Remove all packing materials and shipping devices if applicable.
3. Make sure the delivery contents are complete and free of any damage. If you find that parts are missing or show damage do not use the product but contact your dealer. Using an incomplete or damaged product represents a hazard to people and property.
4. Ensure that you have all the accessories and tools needed for assembly and operation. This also includes suitable personal protective equipment.

WARNING! The product and the packaging are not children's toys! Children must not play with plastic bags, sheets and small parts! There is a danger of choking and suffocation!

You will need

(items not supplied)

Lubrication oil/grease
Suitable personal protective equipment
Suitable torque wrench
Fuel funnel with filter
Suitable spanner
Gasoline and engine oil
Fuel collecting container
Oil collecting container

(items supplied)

Grass catcher (26)
Side discharge attachment (31)
Mulching insert (32)
Spark plug wrench (33)

Assembly

WARNING! The product must be fully assembled before operation! Do not use a product that is only partly assembled or assembled with damaged parts!



Follow the assembly instructions step-by-step and use the pictures provided as a visual guide to easily assemble the product!
Disconnect the spark plug connector (18) from the spark plug! Reconnect it after assembly.

Upper handle bar

Applicable(1-7): LM3N1-HWP10
LM3N1-SPR10

1. Put the product on the ground.
2. Unfold the two clamp levers (7) to release the upper handle bar (2) (Fig. 1, step 1).
3. Unfold the upper handle bar (2) (Fig. 1, step 2) to align it with the lower handle bars (8), then hold the upper handle bar (2) in position. Ensure that the upper handle bar (2) with the brake lever (3) facing upwards.
4. Secure the upper handle bar (2) with the lower handle bars (8) by folding up the clamp levers (7) towards the handle bars (2, 8). If the clamp lever (7) cannot be folded, loosen it and fold again. If it is too loose, firstly hold the locking nut (7a) steady with a suitable spanner (size: 13 mm), then tighten it by turning the clamp lever (7) clockwise (Fig. 2).
5. Make sure that the self-propelling wire (5) and the brake wire (6) run on the upper side of the handle bars (2, 8).
6. Make sure that the pre-assembled hook for recoil start handle (26) rest on your right-hand side (when viewed from operator's position).

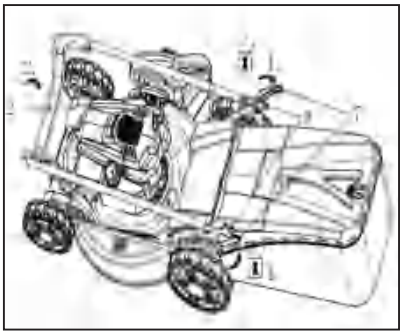

Fig. 1

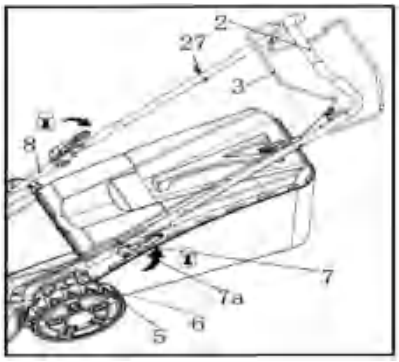

Fig. 2

7. Attach the self-propelling wire (5) and the brake wire (6) with the wire clip (4) on the upper handle bar (2) (Fig. 3)

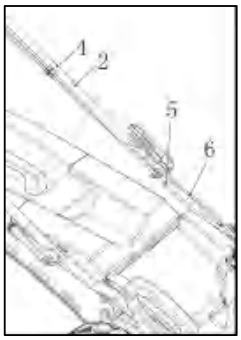

Fig. 3

Applicable(1-4): LM3N1-SPR-T10

1. Put the product on the ground. (Fig. 3-1)
2. Hold the adjustment handles on both sides and rotate the push rod, then release the adjustment handles (Fig. 3-2, step 1.2).
3. Press and hold the button(3), pull the push rod fully outward until it reaches the end position, then release the button(4). (Fig. 3-3).
4. Make sure that the pre-assembled hook for recoil start handle (28) rest on your right-hand side (when viewed from operator's position).

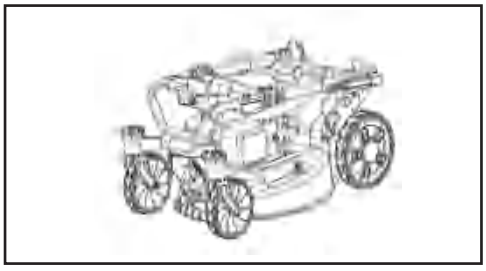

Fig. 3-1



Fig. 3-2

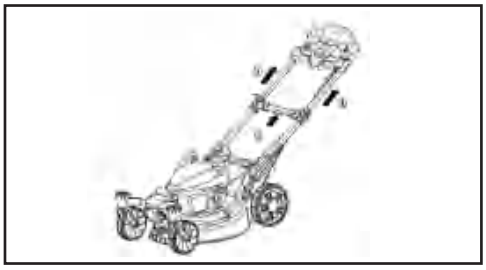

Fig. 3-3

Grass catcher

1. Attach the rubber clips (26c) to the rod (26e) if they are not pre-assembled (Fig. 4).
2. The grass catcher (26) is now ready for use (Fig. 4).

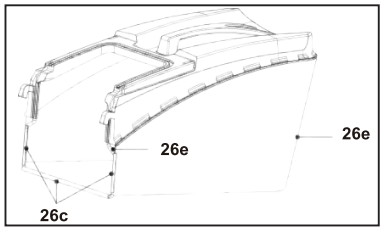

Fig. 4

3. Open the rear defector guard (25) and hold it in position (Fig. 5, step 1).
4. Carry the grass catcher by its carry handle (26a).
5. Align the hooks (26d) with the slots and hang the grass catcher onto it (Fig. 5, step 2)
6. Carefully release the rear defector guard (25) afterwards.

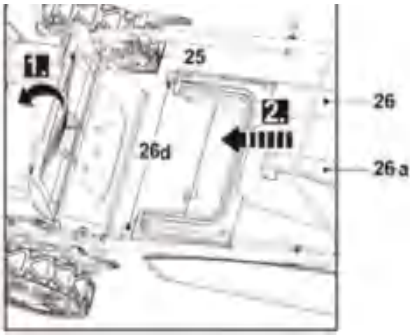

Fig. 5

NOTE: Always carry the grass catcher (26) by its carry handle (26a). Before hooking the grass catcher (26), check if the mulching insert (32) is in the rear discharge chute (29). Take away the mulching insert (32) before hooking the grass catcher (26).

NOTE: The mulching insert (33) must be removed if the grass catcher (27) is used.

Applicable: LM3N1-HWP10
LM3N1-SPR10

1. Attach the rubber clips (24a) to the rod (24d) if they are not pre-assembled (Fig. 4).
2. The grass bag (24) is now ready for use (Fig. 4).

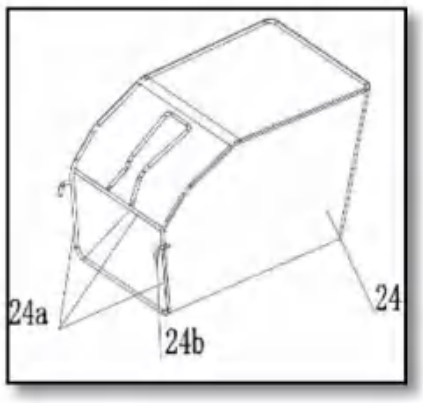

Fig. 4

3. Open the rear deflector guard (23) and hold it in position (Fig. 5, step 1).
4. Carry the grass bag by its carry handle (24c).
5. Align the hooks (24b) with the slots and hang the grass bag onto it (Fig. 5, step 2)
6. Carefully release the rear deflector guard (23) afterwards.

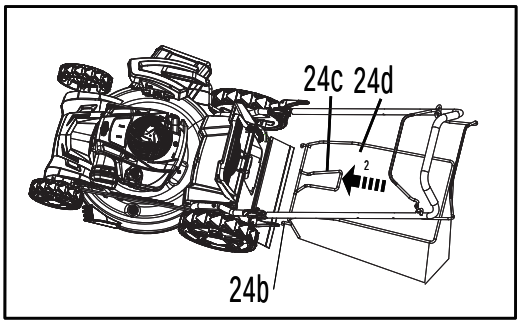

Fig5

NOTE: Always carry the grass bag (24) by its carry handle (24c).Before hooking the grass bag (24), check if the mulching insert (29) is in therear discharge chute. Take away the mulching insert (29) before hooking thegrass bag (24).
The mulching insert (29) must be removed if the grass bag (24) is used.

Fuel and engine oil

This product is equipped with a 4-stroke engine. Before operation it is necessary to add proper fuel and engine oil separately.

1. Place the product on a stable, level surface. We recommend laying a nonflammable sheet under the product.
2. Use proper funnels. Avoid spilling and overfilling the tanks.

WARNING! Fuel and oil are highly inflammable! Fumes will explode if lit! Ensure that there are no naked flames around the product!

Do not smoke while filling fuel and oil!

3. Always dispose of fuel, used oil and objects contaminated with them in accordance with local regulations.

Fuel

NOTE: This product is not supplied with fuel! Before operating this product it is essential to fill it with fuel! Fill fuel and engine oil separately. Never mix oil with gasoline!

1. Always use clean, fresh unleaded gasoline. Purchase fuel in quantities that can be used within 30 days.
2. Never mix oil with gasoline. Avoid getting dirt, dust or water in the fuel tank.
3. Unscrew and remove the fuel tank cap (9) (Fig. 6).
4. Add suitable fuel into the fuel tank. Leave a minimum 5 mm of space between the top of the fuel and the inside edge of the tank to allow for expansion (Fig. 7).

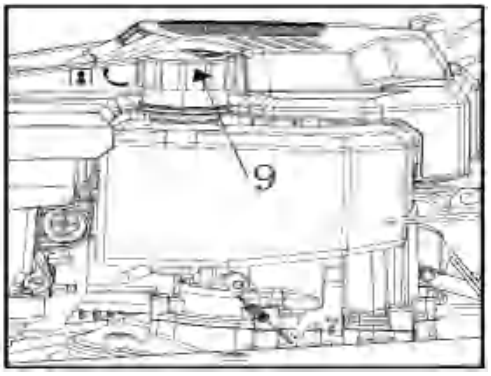

Fig. 6

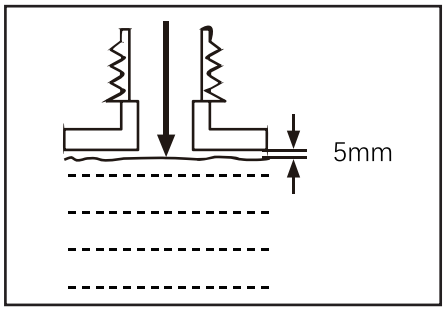

Fig. 7

NOTE: Gasoline deteriorates over time. It may be difficult to start the engine if you use gasoline which has been kept for more than 30 days. Towards the end of the season, it is advisable to put only as much fuel in the tank as you need for each use, since it should be completely used up before storing the product. Always empty the fuel tank when storing the product for over 30 days.

5. Wipe any spilled fuel with a soft cloth and reattach the fuel tank cap (9).

Engine oil

WARNING! This product is not supplied with oil. However, for manufacturing reasons it is possible that a small quantity may be in the engine! Before operating this product it is essential to fill it with proper oil (4-stroke engine oil, e.g. SAE 10W-30)!

Engine oil has a major influence on engine performance and service life. Non- detergent or 2-cycle engine oils will damage the engine and should not be used!

1. Unscrew and remove the oil tank cap (22) (Fig. 8).
2. Gradually add good-quality engine oil (SAE10W-30). Allow the oil to settle.
3. Check the oil level frequently while filling. Wipe the oil dipstick clean and insert it into the tank opening to the end without tightening the cap until it rests on the oil tank, and then remove the dipstick again.
4. The oil level must be between the “max” and “min” of the oil level markings. Add more oil if necessary. Do not overfill (Fig. 9).
5. After adding oil, wait a minute and then recheck the oil level.
6. Wipe spilled oil with a soft cloth and reattach the oil tank cap (22).

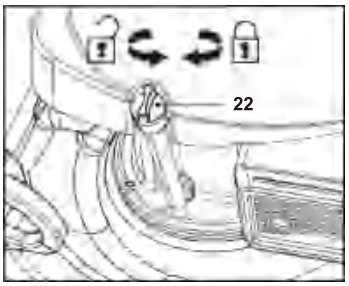

Fig. 8

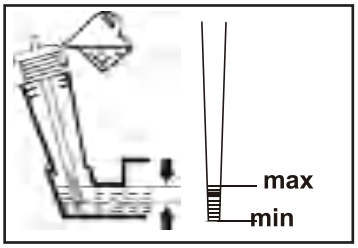

Fig. 9

FUNCTIONS & SETTINGS

Intended use

For safety reasons it is essential to read the entire instruction manual before first operation and to observe all the instructions therein.
This product is intended for private domestic use only, not for any commercial trade use. It must not be used for any purposes other than those described.

Brake lever

1. Pull back the brake lever (3) and hold it against the upper handle bar (2) when starting the engine. Keep it squeezed during operation (Fig. 10).
2. Release the brake lever (3) to stop the engine.

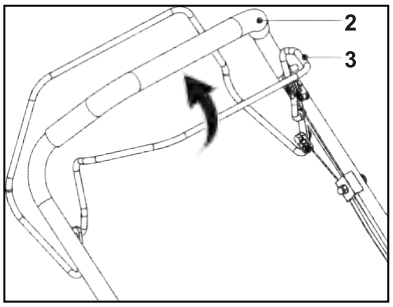

Fig. 10

Recoil starter

The recoil starter handle (28) is positioned at the top of the engine.

1. Pull back the brake lever (3) and hold it against the upper handle bar (2) (Fig. 10).
2. Pull the recoil starter handle (28) lightly until you feel resistance then pull it rapidly. Do it repeatedly until the engine starts (Fig. 11).
3. Always rest the recoil starter handle (28) onto the hook (27) located on the right-hand side of the upper handle bar (2) (Fig. 12) when the recoil starter is not operated.

WARNING! Never twist the starter cord around your hand! Only pull on the recoil starter handle (28)!
Do not suddenly release the recoil starter handle (28)! Allow the starter cord to return slowly and in a controlled manner each time it is pulled!

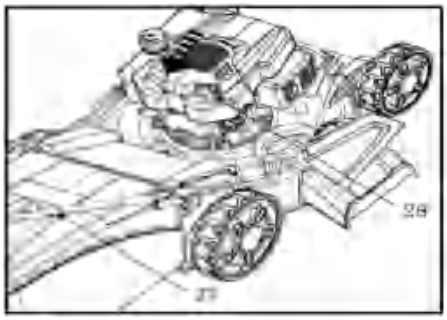

Fig. 11

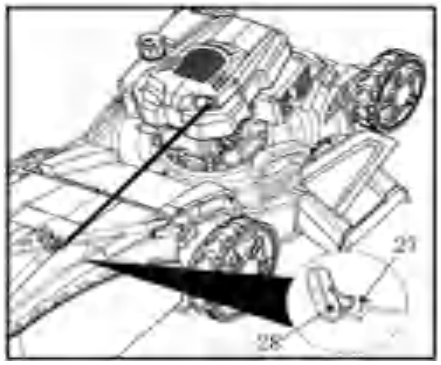

Fig. 12

Self-propelling lever

Applicable to LM3N1-SPR10 and LM3N1-SPR-T10

Use the self-propelled function as assistance during operation; the rear wheels are automatically driven by the engine; you do not need to push the product manually.

1. Push the "Some models are equipped with a self-propelled function (1) forward and hold it against the upper handle bar (2) to engage the rear wheels (Fig. 13).
2. Release the "Some models are equipped with a self-propelled function (1) to disengage the rear wheels.

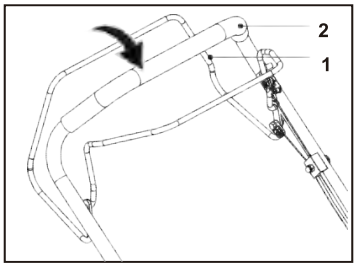

Fig. 13

Grass catcher

WARNING! Do not attempt to use the product without the grass catcher attached when collecting grass - danger of flying objects!
When using the product without the grass catcher (26), insert the mulching insert (32).
Switch the engine off and wait until the blade had come to a complete stop before removing the grass catcher!

1. Always attach the grass catcher (26) when using the product for grass collection as described in the “Assembly - grass catcher” section.
2. Always carry the grass catcher by its carry handle (26a).

Indicator

This action applies to LM3N1-SPR-T10 only.

The grass catcher (26) is equipped with a hatch (26g) that indicates the filling during operation.

1. When the hatch (26g) is opened, the grass catcher (26) has sufficient volume left to collect grass (Fig. 14).
2. When the hatch (26g) is closed, the grass catcher (26) is full and must be emptied (Fig. 15).

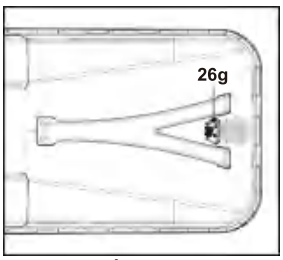

Fig. 14

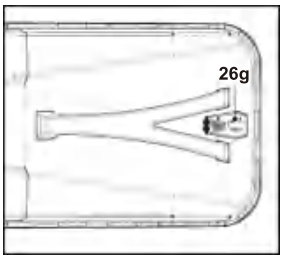

Fig. 15

Emptying The Bag

WARNING! Switch the engine off and wait until the blade had come to a complete stop before removing the grass catcher!

Empty the grass catcher (26) frequently during use. Do not wait until it is completely full. We recommend Emptying The Bag when it is 90% full or the hatch (26g) is closed.

NOTE:A full grass catcher (26) will reduce the performance of this product.

1. Lift the rear defector guard (25) and hold it in place.
2. Lift the grass catcher hooks (26d) off the slots and remove the grass catcher (26).
3. Remove the grass clippings from the rear discharge chute (30) into the grass catcher (27). Use a proper tool such as a brush.
4. Remove the grass catcher (26) by its carry handle (26a).
5. Empty the grass clippings onto a compost heap by its carry handle (26a) and rear handle (26h).
6. Re-fit the grass catcher (26) onto the product and ensure the grass catcher hooks (26d) to stay correctly onto the slots as described in the “Assembly - grass catcher” section.

WARNING! Never use your hands or feet to remove grass clippings from the rear discharge chute (29)!

Mulching insert

The mulching insert prevents grass from being collected by blocking the rear discharging chute (29). This allows the grass clippings to be deposited back on the lawn during cutting.

NOTE: Mulching means cutting and returning the grass clippings to the lawn in one step: the grass clippings are cut very fine and then distributed evenly back onto the lawn. Under normal conditions, the mulched grass will biodegrade quickly to provide nutrients to the lawn.
Do not attach the grass catcher (26) and the mulching insert (32) at the same time.

1. Open the rear defector guard (25）, hold it in position and insert the mulching insert (32） into the rear discharge chute (29) (Fig. 16). Ensure the two spigots (32a) and the locking latch (32b) snap into the rear

discharge chute slots (29a) with a click sound.

2. Squeeze the locking latch (32b) and release it from the rear discharge chute slot (29a), then remove the mulching insert (32) (Fig. 17).

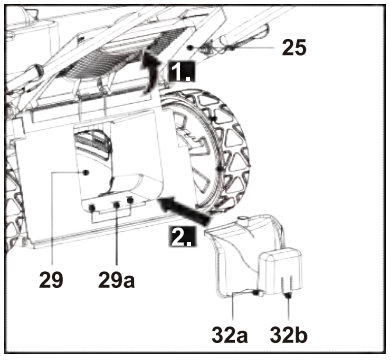

Fig. 16

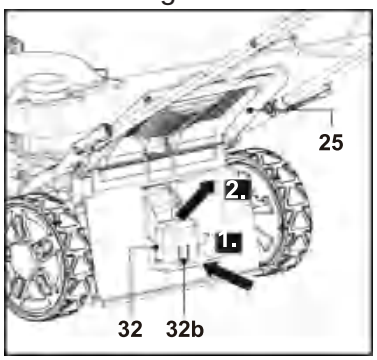

Fig. 17

Side discharge attachment

1. Set the cutting height adjustment lever (24) higher than the second lowest position (Fig. 20).
2. Turn the locking buckle (21a) downward and hold to disengage it
3. (Fig. 18, step 1).
   Open the side defector guard (21) and
4. hold it in position (Fig. 18, step 2）.
   Align and hang the slots (31a) of the side discharge attachment (31) onto the hooks (21b) (Fig. 19). The side discharge attachment is ready for use.

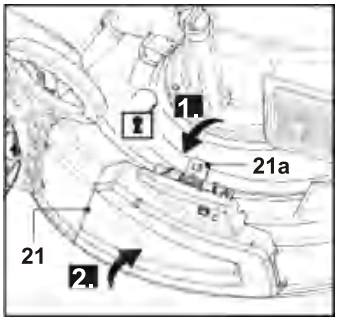

Fig. 18

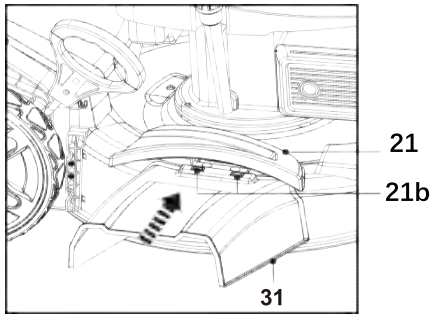

Fig. 19

Cutting height adjustment

Adjust the cutting height according to the needs of your lawn. The cutting height depends on the kind of lawn and its actual height. When mowing high grass, start with the maximum cutting height and make a second cut with a lower cutting height.

1. Pull the lever for cutting height adjustment (23) towards the rear wheel (24) (Fig. 20, step 1), then move it forward or backward to the desired cutting height (Fig. 20, step 2).
2. Release the lever (23) and ensure it engages into place properly (Fig. 20, step 3).

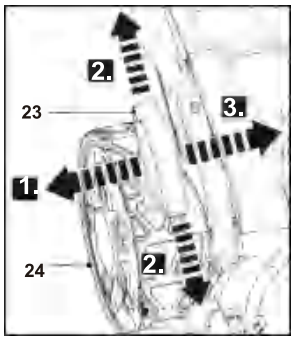

Fig. 20

WARNING! Ensure that the lever for cutting height adjustment (23) engages between two of the prongs! Switch the engine off and wait until the blade had come to a complete stop before adjusting the cutting height!

Fuel valve lever

The fuel valve lever is positioned near the air filter cover (13).
Turn the fuel valve lever anticlockwise to ON position before starting the engine (Fig. 21). Turn the fuel valve lever clockwise to OFF position before maintenance or storage.

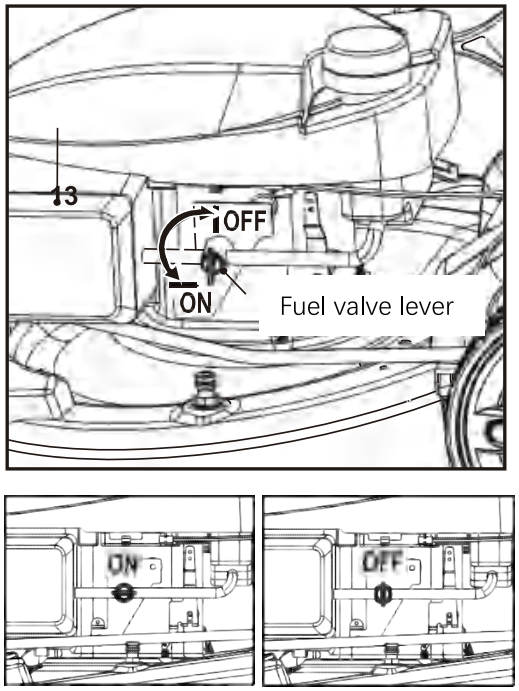

Fig. 21

OPERATION

General operation

1. Before each use:
   •Check the product and accessories for damage and whether they are properly fixed. Do not use the product if it is damaged or shows and signs of wear and tear. Take care of any problem you find or have the product checked by qualified specialist.
   •Check the fuel and oil level. Refill if necessary.
   •Look around and underneath the product for signs of oil or fuel spill.
   •Check each control for proper operation.
   •Check the cutting blade (30) for wear.
   •Make sure that all bolts and screws are tightened.
   •Check if the air filter (13b) is clean.
2. Always push the product using the upper handle bar (2). Use the self-propelling function if required. Keep the handle bar dry and free from lubricant to ensure safe support.
3. Ensure that the air vents are always unobstructed and clear. Clean them if necessary with a soft brush. Blocked air vents may lead to overheating and damage the product.
4. Stop the engine immediately if you are disturbed while working by other people entering the working area. Always let the product come to a complete stop before leaving the product unattended.
5. Do not overwork yourself. Take regular breaks to ensure you can concentrate on the work and have full control over the product.

Starting/Stopping

WARNING! Before starting, put the product on a fat surface free of high grass! Clean the underside of the deck!
Keep yourself ready! The product will start moving forward once you hold the Some models are equipped with a self-propelled function (1) towards the upper handle bar (2)! Start the engine carefully according to instructions. Keep your feet well away from the blade (30)!

Do not tilt the product when starting the engine.

Start

1. Make sure that the fuel valve lever at the ON position (Fig. 22).
2. Stand behind the upper handle bar (2).
3. Pull back the brake lever (3) and hold it against the upper handle bar (2) (Fig. 22, step 1).
4. Rest the recoil starter handle (28) onto the hook (27) located on the right hand side of the upper handle bar (2).
5. Pull the recoil starter handle (28) lightly until you feel resistance then pull it rapidly. Do it repeatedly until the engine starts (Fig. 22, step 2).
6. When you are ready to mow, push the Some models are equipped with a self-propelled function (1) forward and hold it against the upper handle bar (2) (Fig. 22, step 3). The product starts moving forward and begins mowing.

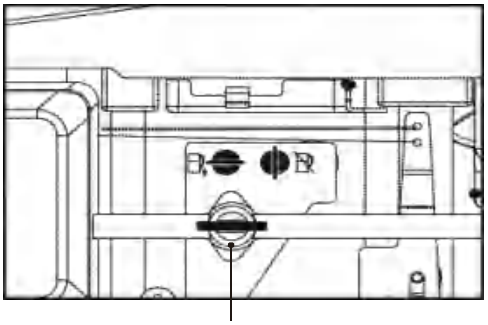

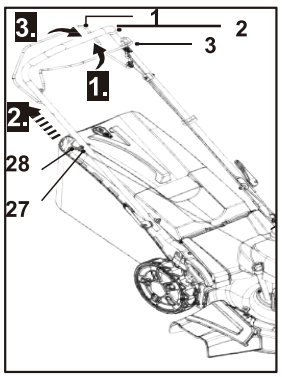

Fig. 22

WARNING! The starting position should be as described in the instruction manual. Fig. 23 A illustrates the defined starting position. The operator should start the engine behind the upper handle bar (2). Do not start.

the engine while standing on the side of the product as shown on Fig. 23 B.

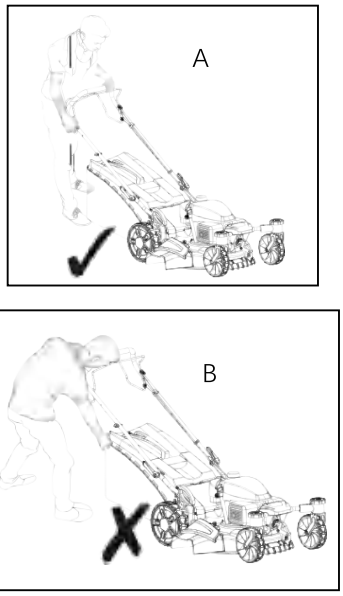

Fig. 23

NOTE: If the engine does not start, the engine may be flooded. Flooding is caused by too much fuel injected into the combustion chamber and can prevent a product from starting. Follow below procedure:

1. Remove the spark plug (18a) and dry it.
2. Pull the recoil starter handle (28) for several times to drain the fuel from the combustion chamber.
3. Wait until fuel vapors evaporate and refit the spark plug. Clean up any spilled fuel and move the product at least 3 metres (10') away before starting the engine to avoid any accidental fire. Wait for the engine to cool down then start the product as described in the "Start" section.

Stopping

1. Release the self-propelling lever (1) to stop the self-propelled function (Fig. 24, step 1).
2. Release the brake lever (3) to stop the engine and blade (Fig. 24, step 2).

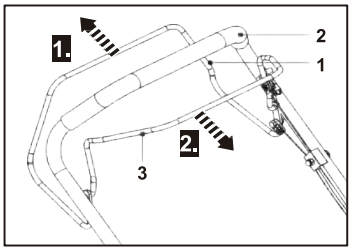

Fig. 24

Mowing

1. Make sure that the lawn is clear of stones, toys, sticks, wire or other objects that could damage the product or its engine.
2. Do not cut wet grass because it tends to stick to the underbody of the product, preventing the proper discharge of grass clippings, and it could also cause you to slip and fall.
3. Never cut off more than one-third of the total length of the grass for a healthy lawn. In the autumn, lawns should only be cut as long as there is growth.
4. Mow in slight overlapping rows. The most effective pattern for mowing lawns is straight lines along one of the sides. This will keep the rows even and ensures that all the lawn is cut without missing any spots (Fig. 25).

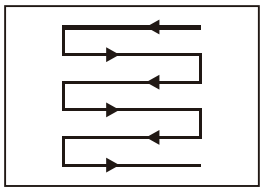

Fig. 25

5. Circle around flower beds. When reaching a flower bed in the middle of the lawn, cut a row or two around the circumference of the bed.
6. Pay special attention when changing direction.
7. Empty the grass catcher (26) regularly.

WARNING! If the product strikes a foreign object stop immediately! Let the product cool down and thoroughly inspect the product for damage! Have any damage repaired before restarting!



Extensive vibration of the product during operation is an indication of damage!



Stop the engine immediately. The product should be promptly inspected and repaired!

8. Prepare the product according to required application.

Function	Grass catcher	Mulching insert	Side discharge attachment
Grass collection	attached	removed	removed
Mulching	removed	inserted	removed
Side discharge	removed	inserted	inserted

Grass collection

1. Remove the mulching insert (32) and attach the grass catcher (26). Make sure the side discharge attachment (31) is not fitted to the product and the side defector guard (21) is in place.
2. Empty the grass catcher (26) regularly.

Mulching

NOTE: Mulching means cutting and returning the grass clippings to the lawn in one step: the grass clippings are cut very fine and then distributed evenly back onto the lawn. Under normal conditions, the mulched grass will biodegrade quickly to provide nutrients to the lawn.

1. Insert the mulching insert (32) into the rear discharge chute (29), make sure the side discharge attachment (31) and grass catcher (26) are not fitted to the product and the side defector guard (21) is in place.
2. Avoid mowing when the grass is wet from rain or dew. Wet grass may form clumps which interfere with the mulching action and reduce runtime. The best time to mow grass is late afternoon when the grass is dry and the newly cut area will not be exposed to direct sunlight.
3. Set the cutting height to about one third of the grass blade length, ideally no more than 35 mm at one time for best mulching performance. If the lawn is overgrown, it may be necessary to increase the cutting height to reduce the pushing effort and prevent the engine overloading. For extremely heavy mulching, it is advisable to first cut at a high cutting height, and then again to a lower cutting height. Otherwise, make narrower cuts and mow slowly.
4. Keep the housing free of built-up grass for best performance. From time to time switch the product off and wait for the blade to come to a complete stop. Then turn the product on its side. Using an object such as a wooden stick, remove any accumulation of grass in the blade area. Be careful of the sharp edges of the blade. Clean often after cutting new grass and after every use.
5. Certain types of grass or grass conditions may require an area to be mulched a second time to fully disperse the grass across the lawn. When cutting a second time, it is advisable to cut perpendicular (across） the first cutting pattern. Do not change the cutting pattern in any way that would cause you to mow downhill.
6. Change your cutting pattern from week to week. This will help prevent matting and graining of the lawn.

Side discharging

NOTE: When using the side discharge function, the grass clippings are discharged and spread across the ground Attach the side discharge attachment (31). Make sure the mulching insert (32) is inserted and the grass catcher (26) is not fitted to the product.

NOTE: Fuel may leak from the fuel tank cap (9) and/or carburetor (14). Always ensure the fuel tank remains at a top position.

After use

1. Stop the engine, disconnect the spark plug connector (18) and let it cool down.

WARNING! The spark plug (18a) will stay hot for a longer period of time after operation!

2. Turn the fuel valve lever to the OFF position.
3. Check, clean and store the product as described below.

CARE AND MAINTENANCE

General Care

WARNING! Proper maintenance is essential for safe and trouble free operation. Improper maintenance, or failure to address a problem instantly can cause a malfunction which can result in serious injury or even death.

WARNING! Always stop the engine, disconnect the spark plug connector (18) and let the product cool down before performing inspection, maintenance and cleaning work!

DO NOT touch a rotating blade (30).

1. Keep the product clean. Remove debris from it after each use and before storage.
2. Regular and proper cleaning will help ensure safe use and prolong the life of the product.
3. Inspect the product before each use for worn and damaged parts. Do not operate it if you find broken and worn parts. Replace worn parts as necessary or contact an authorised service centre for repair before using the product again.

WARNING! Only perform repairs and maintenance work according to these instructions! All further works must be performed by a qualified specialist!

General cleaning

1. Clean the product with a slightly damp cloth and mild soap. Use a brush for areas that are hard to reach.
2. In particular clean the air vents after every use with a cloth and brush.
3. Remove stubborn dirt with high pressure air (max. 3 bar).

NOTE: Do not use chemical, alkaline, abrasive or other aggressive detergents or disinfectants to clean this product as they might be harmful to its surfaces.

4. Check for worn or damaged parts. Replace worn parts as necessary or contact an authorised service centre for repair before using the product again.

Using the Deck Wash Port

1. Turn the fuel valve lever to the ON position.
2. Carry out the water supply deck cleaning in a flat area with good water drainage. Connect a garden hose to the water inlet (11) on the mower deck (Fig. 26).
3. Set the mower cut height to the highest position. Only clean with the product in the normal working position. Do NOT tilt or support the mower above the ground. Turn the water on.
4. Pull the brake lever (3) and hold it against the upper handle bar (2), then pull the recoil starter handle (28) lightly to start the engine and cutting blade (30).
5. Stop the engine by releasing the brake lever (3) when no further dirty water or debris can be seen exiting the underside of the product.
6. Turn the fuel valve lever to the OFF position.
7. Dry the product with suitable cloths or paper towel. Wipe over the inside of the deck and blade with spray lubricant to prevent corrosion.

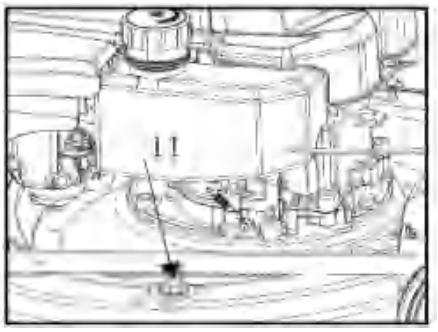

Fig. 26

Maintenance table

Part	To do	Before/ after each use	First month or 5 hours	Every 3 months or 25 hours	Every 6 months or 50 hours	Every year or 100 hours	Every 2 years or 250 hours
Engine oil	check	✘					
	replace				✘		
Air filter	check	✘					
	clean			✘			
	replace						✘
Spark plug	check/ adjust			✘			
	clean			✘			
	replace						✘
Spark plug cap	clean					✘	
Fuel tank and filter	clean			✘			
Fuel tube	check	Every 2 years (replace if necessary)					
Valve clearance	check/ adjust					✘	
Muffler	check					✘	
	clean					✘	
	replace					✘	
Combustion chamber	clean	Every 200 hours					
Flywheel brake pad	check				✘		

Underbody and cutting device



WARNING! Wear protective gloves when working on the cutting device (30) and close to it! Use proper tools to remove debris, e. g. a wooden stick! Never use your bare hands! Always use original spare parts for replacement. The cutting device (30) must be replaced with the appropriate model. Do not attach any other type of cutting device!
The replacement of the cutting device (30) should be done by an experienced user! Rework or sharpening blades is not recommended unless it is done by a repair service or a similarly qualified specialist!



NOTE: We strongly recommend jacking the product when performing inspection and work on the cutting device (30). Avoid tilting the product in order to prevent fuel and oil leakages.

1. Keep the underbody and cutting device (30) clean and free of debris. Remove clippings from the rear discharge chute (29).
2. Check all nuts and bolts periodically for tightness before operation. After prolonged use, especially in sandy soil conditions, the cutting device (30) will become worn and lose some of the original shape. The cutting efficiency will be reduced and the cutting device should be replaced.
3. Keep the cutting device (30) sharp to ensure a good cutting performance. Replace a worn or damaged cutting device with a new one of the same type or have it sharpened by a qualified specialist.
4. If jacking the product is not possible, tilt it to the right side so that the fuel tank cap (9) side is up. This helps to prevent fuel leakage and harder starting due to flooding of the carburetor (14).
5. Loosen the hex bolt (30e) anticlockwise using a suitable wrench (size 17 mm) and remove it together with the cup washer (30d), the cutting device (30), the blade holder (30c) and the pin (30b) from the spindle (30a) (Fig. 27).
6. Slide the pin (30b） into the slot on the spindle (30a）, then refit the blade holder (30c） onto the spindle (30a) and hold the assembly in position.
7. Replace the cutting device (30) with a new one of the same type. Check the status of the flange onto the blade holder (30c), then attach the cutting device (30) properly and fix the assembly with the cup washer (30d) and hex bolt (30e). Tighten the hex bolt (30e) clockwise with 40-45 N.m to ensure safe operation of your product (Fig. 27).

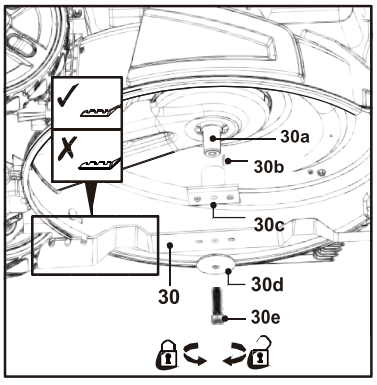

Fig. 27

DANGER! Before fitting the cutting device (30）, making sure that the blade's wings are facing toward the interior of the blade deck.

DANGER! If the cutting device (30) are not torqued properly, they could become loose and be thrown from the product and seriously hurt or kill the operator or bystanders.

NOTE: Replace this cutting device (30) after 50 hours mowing or 2 years whichever is sooner regardless of condition. If the cutting device is cracked or damaged, you must immediately replace it with a new one.

8. Lubricate the cutting device (30) after each use to prolong the life span of both the cutting device and product. Apply lubrication oil/grease along the edges of the cutting device (30).

Grass catcher

1. Inspect the grass catcher (26) before each use. Do not use it if you find any damage.
2. Clean the grass catcher (26) after operation using water and mild soap.
3. Let the grass catcher (26) dry thoroughly before storing to avoid mildew.

Wires

Check the performance of the self-propelling wire (5) and the brake wire (6) before each use. Ask a qualified specialist to adjust it if necessary.

WARNING! Do not use the product with defective or loose wires!

Air filter

NOTE:A properly maintained air filter (13b) helps to prevent dirt from entering the engine. Entering dirt can cause blockages that can lead to premature engine wear or problems with starting or running the engine. Wash the air filter (13b) every 25 hours (in dusty conditions or when airborne debris is present, clean more often).

1. Inspect the air filter (13b) regularly. Replace it with a new one if necessary.
2. Press two latches (13a) to disengage the air filter cover (13) and remove the air filter cover (13) afterwards (Fig. 28).

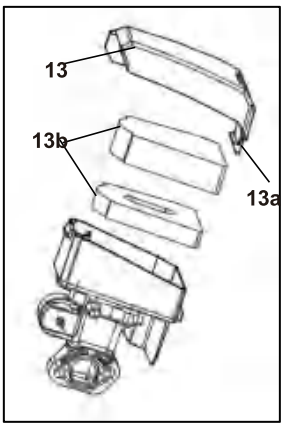

Fig. 28

3. Remove the air filter (13b) and tap it on a solid surface or blow it with air jet gun to remove dust.
4. Close the air filter cover (13) and ensure two latches (13a) engage properly.

Spark plug

NOTE: For good performance, the spark plug (18a) must be properly gapped and free of deposits.

Inspect the spark plug (18a) every 25 hours or before long-term storage over 180 days. Clean or replace with a new one if necessary (type: F7RTC).

1. Disconnect the spark plug connector (18) (Fig. 29).
2. Loosen the spark plug anti-clockwise using the spark plug wrench (33) and remove it carefully (Fig. 30).

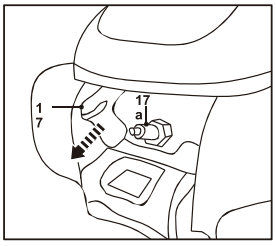

Fig. 29

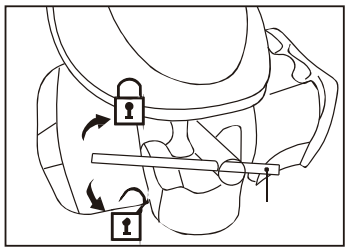

Fig. 30

3. Check the spark plug (18a) for damage and wear. The colour of the electrode should be light-brown.
4. Remove the deposits from the electrode with a soft wired brush. Avoid heavy cleaning of the electrode.
5. Dry the spark plug (18a) with a soft cloth, if it is wet from fuel.
6. Check the spark plug gap. It should be 0.7-0.8 mm (Fig. 31).
7. Replace with a new spark plug if either the electrode or the insulation is damaged.
8. When replacing the spark plug (18a), first screw it in hand tight and then lightly tighten it with the spark plug wrench (33).

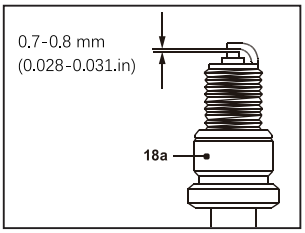

Fig. 31

WARNING! Do not over tighten the spark plug (18a) to avoid any damage!

Fuel

NOTE: Gasoline deteriorates over time. Engine starting may be difficult if you use gasoline kept for more than 30 days.

1. Do not allow gasoline to remain in your engine for long term storage. It must be drained out into a container.
2. After draining the fuel tank, replace the fuel cap back and tighten it, start the engine, continue to run the engine until it stops from the lack of fuel in the carburetor fuel bowl. Running time is about 5 minutes.

WARNING! DO NOT run the engine too long, or it will damage the engine!

Checking engine oil

NOTE: Check the oil level and quality before each use.
The oil must be replaced after every 6 months or after 50 hours of operation.

1. Unscrew and remove the oil tank cap (22).

2. Gradually add good-quality engine oil (SAE 10W-30). Allow the oil to settle.
3. Check the oil level frequently while filling. Wipe the oil dipstick clean, refit and tighten the oil tank cap (22), and then remove the dipstick again.
4. The oil level must be between the oil level markings. Add more oil if necessary. Do not overfill 500ml.
5. After filling oil, wait 1 minute and then recheck the oil level.
6. Wipe the spilt oil with a soft cloth and reattach the oil tank cap (22).

Troubleshooting

Problem	Possible cause	Solution
1.Engine does not start	1.1.Fuel valve OFF 1.2.Not enough fuel in fuel tank 1.3.Spark plug is wet 1.4.Spark plug is damaged 1.5.Spark plug connector is loose 1.6.Air filter is dirty 1.7.Spark plug is loose 1.8.Spark plug gap is incorrect 1.9.Carburettor is flooded with fuel 1.10.Faulty ignition module	1.1.Turn the fuel valve lever to ON position 1.2.Add fuel 1.3.Dry spark plug 1.4.Replace spark plug 1.5.Attach properly 1.6.Clean air filter 1.7.Tighten spark plug 25-30 N.m 1.8.Set gap between electrodes at 0.7 - 0.8 mm 1.9.Remove the spark plug and pull recoil starter handle continuously until carburettor clears itself 1.10.Contact an authorised service agent
2.Engine stops	2.1.Not enough fuel in fuel tank 2.2.Cutting device is blocked	2.1.Add fuel 2.2.Remove blockage
3.Engine difficult to start or loses power	3.1.Dirt, water or stale fuel in the tank 3.2.Vent hole in fuel tank cap is clogged 3.3.Air filter is dirty	3.1.Drain fuel and clean tank. Fill tank with clean, fresh fuel 3.2.Clean or replace fuel tank cap 3.3.Clean air filter
4.Engine operates erratically	4.1.Spark plug is defective 4.2.Spark plug gap is incorrect 4.3.Air filter is dirty	4.1.Install new, correctly gapped plug 4.2.Set gap between electrodes at 0.7 - 0.8 mm 4.3.Clean air filter
5.Engine idles poorly	5.1.Air filter is dirty 5.2.Air vents are clogged 5.3.Cylinder fins are blocked	5.1.Clean air filter 5.2.Remove debris from vents 5.3.Remove debris from cylinder fins
6.Engine skips at high speed	6.1.Gap between electrodes of spark plug is too close	6.1.Set gap between electrodes at 0.7 - 0.8 mm
7.Engine overheats	7.1.Air vents are clogged Incorrect spark plug	7.1.Remove debris from vents 7.2.Install correct spark plug and cylinder fins on engine
8.Unsatisfactory result	8.1.Cutting device is dull 8.2.Cutting material exceeds capacity 8.3.Cutting height is incorrect 8.4.The walking line is not straight	8.1.Replace with a new one 8.2.Only cut materials acc. to the capacity of the product 8.3.Adjust cutting height 8.4.Lock the two front wheels (15) in mowing
9.Excessive vibration/ noise or exhaust	9.1.Cutting device is dull/damaged 9.2.Bolts/nuts are loose 9.3.Gasoline/oil type is incorrect	9.1.Replace with a new one 9.2.Tighten bolts/nuts 9.3.Drain the gasoline/oil and refill with the correct gasoline/oil

GUARANTEE

AiPower Product Warranty
General Warranty Information

AiPower LLC provides this limited warranty to the Initial Purchaser of new AiPower branded products ("Product"). The "Initial Purchaser" is the first person to purchase the Product from an authorized AiPower retailer, distributor, or dealer ("Retailer"). AiPower makes no other express warranty. The engine manufacturer and/or battery manufacturer may provide separate warranties for their components and provide its/their own special emission system warranty. To ensure warranty coverage, retain your original sales receipt as proof of purchase. The warranty period commences on the date of purchase from an authorized Retailer. This warranty is exclusive to the Initial Purchaser, is non-transferable, and applies only to Products purchased and used within the United States and Puerto Rico. Products purchased or used outside these regions are not covered by this warranty.

Two-Year Limited Warranty – Engine and Gearbox

Product is warranted to be free from manufacturing defects in workmanship or materials for two years from the date of purchase for residential use only ("Warranty Period"). Commercial, rental, or industrial use voids this warranty. During the Warranty Period, AiPower LLC will, at its option, repair or replace any original part determined to be defective in workmanship or material. This warranty does not cover:

- Accidental damage, misuse, neglect, or normal wear and tear.
- Failure to comply with the Operating, Safety, and Maintenance Instructions provided in the operator's manual.
- Unauthorized service, modifications, or use of non-AiPower parts or accessories.
- Expendable or consumable items requiring replacement as part of normal maintenance, unless defective within the first thirty (30) days of purchase.

All service beyond routine maintenance must be performed by an authorized AiPower service technician. Unauthorized service or alterations to the Product's original configuration will void the warranty.

Exclusions

This limited warranty does not cover:

- Products purchased outside the United States or Puerto Rico.
- Damage due to lack of maintenance or improper maintenance as described in the operator's manual.
- Normal wear and tear resulting from Product use.
- Use of the Product inconsistent with its intended purpose, including abuse, misuse, or neglect, or non-compliance with instructions in the operator's manual.
- Any Product altered or modified in a manner not consistent with its original design or in an unapproved manner.
- Damage resulting from the installation or use of non-OEM parts or accessories.
- Loss of time, loss of use, transportation costs, or other expenses incurred in connection with transporting the Product to and from an authorized service provider.
- Damage to other equipment or personal items.

Warranty Claims and Service Process

To obtain warranty service, contact the AiPower Support Center at 855-888-3598 or support@aipower.com, Monday through Friday, 7:30 AM to 5:30 PM Eastern Time, or visit www.aipower.com/warranty. A copy of your original sales receipt is required for warranty service. Follow these steps for service or warranty evaluation:

1. **Contact AiPower:** Call 855-888-3598 or email support@aipower.com during business hours.
2. **Provide Proof of Purchase:** Submit the original sales receipt and Product serial number to verify warranty eligibility.
3. **Obtain an RGA Number:** If service or evaluation is required, AiPower may issue a Return Goods Authorization (RGA) number and provide a list of authorized service centers, if applicable.
4. **Shipping Requirements:** All shipments to AiPower must include the RGA number clearly marked on the package. Shipments without an RGA number will be refused. Shipping costs are the responsibility of the

Initial Purchaser, and AiPower is not liable for packages lost in transit. Use a carrier that provides tracking and delivery confirmation.

5. **Service Support:** AiPower Support agents will assist with troubleshooting over the phone to resolve issues promptly. For Briggs & Stratton engine warranty claims, contact an authorized Briggs & Stratton dealer directly or refer to the Briggs & Stratton Owner's Manual for specific instructions.

Limitations

1. **No Implied Warranties:** There are no implied warranties, including but not limited to any implied warranty of merchantability or fitness for a particular purpose. No warranty applies after the applicable Warranty Period. No other express warranty or guaranty, whether written or oral, except as mentioned herein, given by any person or entity, including a Retailer, shall bind AiPower LLC. The exclusive remedy during the Warranty Period is repair or replacement of the defective part. (Some states do not allow limitations on implied warranties, so this limitation may not apply to you.)
2. **No Incidental or Consequential Damages:** AiPower LLC shall not be liable for incidental or consequential loss or damages, including but not limited to transportation costs, rental expenses, or temporary replacement costs. (Some states do not allow the exclusion of incidental or consequential damages, so this exclusion may not apply to you.)
3. **Recovery Limitation:** In no event shall recovery of any kind exceed the purchase price of the Product. Alteration of safety features voids this warranty, and the Initial Purchaser assumes all risk and liability for loss, damage, or injury arising from use, misuse, or inability to use the Product.

How State Law Relates to This Warranty

This limited warranty gives you specific legal rights, and you may also have other rights which vary from state to state.

Contact Information

For additional information or questions, contact AiPower at 855-888-3598 or support@aipower.com, Monday through Friday, 7:30 AM to 5:30 PM Eastern Time, or visit www.aipower.com/warranty. For Briggs & Stratton engine support, visit briggsandstratton.com or call 1-800-233-3723.

Important: Save these instructions for future reference.


POWER™