SOLAR PANEL 200W
Owner's Manual

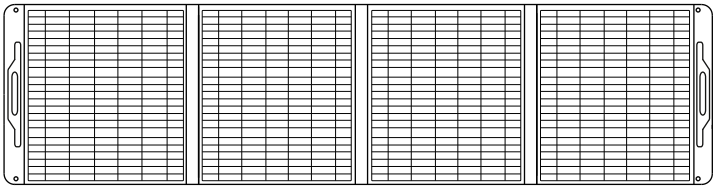

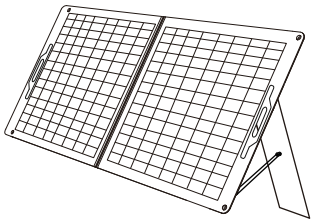

STOP DO NOT RETURN TO STORE!

CALL US FIRST
1-787-251-3131
FOR SUPPORT

P/N: 00071-MA90-00

Model# ASP200

Rev:00

Model:_____

Serial:_____

Date Purchased:_____

KEEP THIS MANUAL FOR FUTURE REFERENCE

HOW TO CHARGE

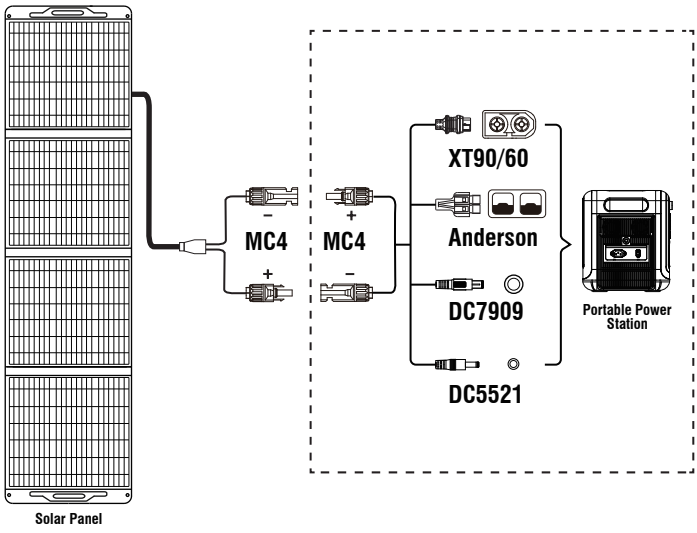

ADJUST ANGLE

☼ To harvest solar energy most efficiently, try to ensure that the sun's rays hit the panel at a 90°angle and that the panel is not shaded.

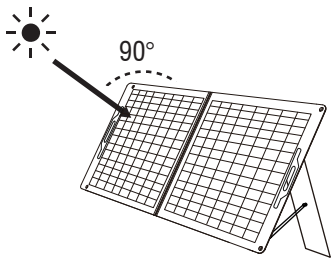

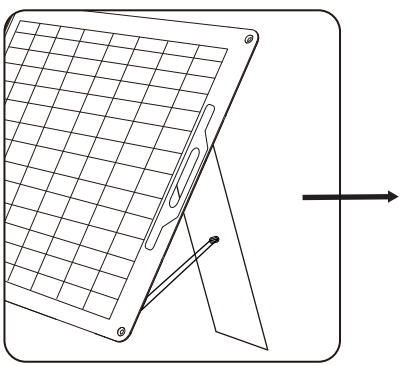

☼ Adjust the Angle of the solar panel.

TECHNICAL DETAILS

Model:	ASP200
Peak Power (Pmax):	200W
Cell Type:	Monocrystalline silicon
Solar Cell Lamination:	ETFE
Cell Efficiency:	Up to 23.5%
Voltage at Max Power (Vmp):	20V
Current at Max Power (Imp):	10A
Operating Temperature:	-10℃～65℃
Best Working Temperature:	25℃
Folding Number:	3
Dimension(unfolded):	590*2121mm/23.2*83.5 inch
Dimension(folded):	590*559mm/23.2*22 inch
Weight:	8.25kg/18.15 lb

WHAT'S INSIDE THE BOX

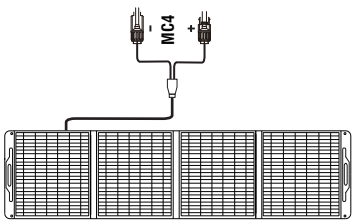

Solar Panel with Charging Cable



User Manual

SAFETY TIPS

- Do not bend the solar panel.
- Do not soak the solar panel into water or any other liquid.
- Do not use or store this solar panel near fire or heater.
- Do not scratch the solar panel with sharp objects.
- Do not disassemble the solar panel by yourself.
- Do not put corrosive substance on this solar panel.
- Ensure shade from trees, buildings, and any other obstructions do not block sunlight while using the panel.

- Do not use this product as a children's toy.
- Please note that the solar panel may be damaged by falling or impact.
- During recharging, keep your portable power station away from heat and direct sunlight to extend its life span.



FAQ (FREQUENTLY ASKED QUESTIONS)
Q: THE COMPATIBILITY OF THE SOLAR PANEL.

☼ **Tips: To confirm the solar panel's compatibility with 3rd-party devices, please consult the seller.**

Q: WHAT FACTORS MAY AFFECT THE SOLAR CONVERSION RATE?

1. The weather condition.
2. Working environment temperature.
3. The angle from the panels to sunlight.

Q: HOW TO DECIDE THE NUMBER OF PANELS REQUIRED TO RECHARGE?

1. The output power of solar panels should fit the recommended voltage.
2. The max open circuit voltage is not able to exceed in the max input voltage of power station.
3. The gross output current of solar panels should be between the recomended working voltage.

☼ **When using multiple solar panels in series or parallel, please make sure that the accumulated maximum voltage and current of the solar panels does not exceed in the maximum voltage and current of the power station.**

LIMITED WARRANTY

KEEP YOUR RECEIPT. Proof of purchase will be required to substantiate any warranty claim.

WHAT IS COVERED: A-iPower/TuplantaPR warrants to the original retail purchaser that this product is free of defects in material and workmanship and agrees, at A-iPower/TuplantPR' s direction, to either repair, provide replacement parts for, or replace (without charge for parts or labor) any product or component with a material defect for a period of 5 years from the date of purchase, subject to exclusions noted herein. Warranty service and replacement parts are warranted only for the duration of the warranty on the original product. All replaced parts or products become the property of A-iPower/TuplantaPR.

WARRANTY TERMS

We will provide 5 years limited warranty for A-iPower portable power station products purchased through any authorized A-iPower dealer in Puerto Rico that fails to operate during the applicable warranty period due to any defect in workmanship or material. If a valid claim is made during the applicable period, A-iPower/TuplantaPR, at its option, will either (1) repair the product, or (2) exchange the product with a product that is of equal value. A replacement product assumes the remaining warranty of the original product or ninety (90) days from the date of replacement, whichever is greater. For questions regarding coverage, please contact:

TUPLANTAPR

AVENUE LOMAS VERDES IH-5 BAYAMON PUERTO RICO

www.tuplantapr.com

1-787-251-3131

Please have the necessary information available - Model Number, Serial Number and Proof of Purchase.

WARRANTY EXCLUSIONS

This warranty does not cover the followings:

This warranty will not cover repair when normal use has exhausted the lifetime of a part(s) or the unit.

-Installation and Maintenance - this warranty does not cover improper or unauthorized assembly, alteration, modification, or any other damage

resulting from misuse or neglect.
-Cosmetic defects such as scratches to paint, decals, etc.
-Costs of normal maintenance and adjustments.
-Repairs or diagnostics performed by individuals other than an A-iPower's Authorized Service Dealer (unless approved by A-iPower)
-Failures due to normal wear and tear, accident, misuse, abuse, negligence, or improper use.
-Failures caused by any external cause or act of God, including but not limited to, collision, theft, vandalism, riot, war, fire, freezing, lightning, earthquake, windstorm, hail, water, flood, tornado, or hurricane.
-Damage related to rodent and/or insect infestation.
-Any incidental, consequential or indirect damage caused by defects in materials or workmanship, or any delay in repair or replacement of the defective part(s).
-Failure due to misapplication.
-Telephone, cellular phone, facsimile, internet access, or other communication expenses.
-Expenses related to “customer instruction" or troubleshooting where no manufacturing defect is found.
-Overnight freight or special shipping costs for replacement part(s).
-Overtime, holiday or emergency labor.

MERCHANDISE RETURN GUIDELINES

-All products must be returned in original or equivalent packaging, if determined by
A-iPower/TuplantaPR Customer Service. Improperly packaged returns will not be accepted.
-Must have adequate packing for transportation.
-Return to address provided in return authorization, using the parcel service required. Units returned without authorization will not be rewarded.
-Please Note: Refunds will not be granted for items that have been modified or damaged by abuse or usage not in accordance with product instructions.