POWER™

PORTABLE GENERATOR

Owner's Manual

AP10700ED

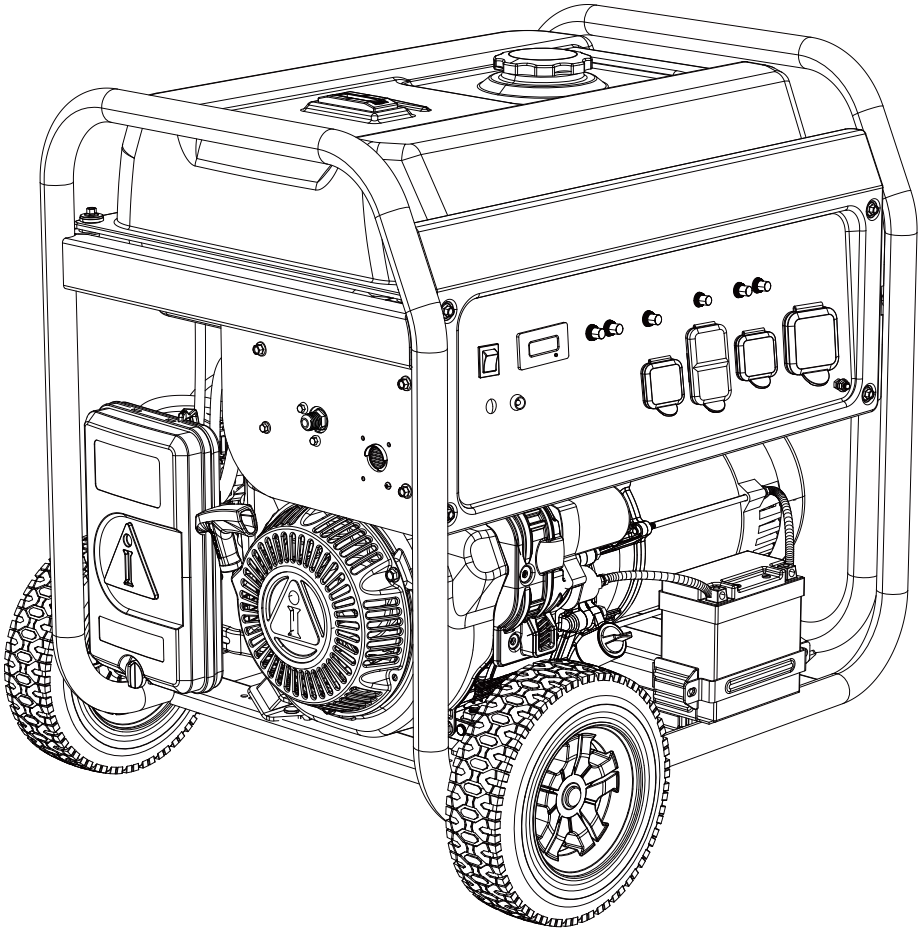

STOP DO NOT RETURN TO STORE!

CALL US FIRST
855-888-3598
FOR SUPPORT

Model: _____

Serial: _____

Date Purchased: _____

Model# 4591015 REV00

P/N: 32082-08357-00

SAVE THIS MANUAL FOR FUTURE REFERENCE

Table of Contents

Introduction.....1

Safety.....1

General Safety Precautions.....2

Safety And Dataplate Labels.....8

Unpacking the Generator.....9

Parts Included.....9

Assembly.....10

Install the Wheel Kit.....10

Install the Support Leg.....10

Install the Handle assy.....10

Controls and Features.....12

Control Panel Features.....13

Specifications.....14

CO WATCH-GUARD.....15

Add Engine Oil.....17

Low Oil Shutdown.....17

Add Fuel:Gasoline.....17

Add Fuel:Propane/LPG.....18

Operation at High Altitude.....19

Grounding.....20

Connecting to a Building's Electrical System.....20

Operation..... 21

Generator Location.....21

Surge Protection.....21

Before Starting the Generator.....21

Starting the Engine (Generator).....21

Stopping the Engine (Generator).....23

Low Oil Shutdown.....24

Do Not Overload Generator.....25

Changing Fuels.....25

Maintenance And Storage.....26

Maintenance Schedule.....26

Engine Maintenance.....26

Engine Oil Level Check.....26

Change Engine Oil.....27

Spark Plug Maintenance.....27

Air Filter Maintenance.....28

Cleaning the Spark Arrestor.....28

Valve Clearance.....28

Generator Maintenance.....28

Storage.....29

Trouble Shooting.....31

Parts Diagram and Parts List.....32

Parts Diagram.....32

Parts List.....33

Circuit Diagram.....40

Warranty.....41

INTRODUCTION

Read This Manual Thoroughly

⚠ WARNING



Read and understand manual completely before using product. Failure to completely understand manual and product couldresult in death or serious injury.

If any section of this manual is not understood, contact customer Service at 855-888-3598, or www.a-ipower.com for starting, operating and servicing procedures. The owner is responsible for proper maintenance and safe use of the unit.
SAVE THESE INSTRUCTIONS for future reference.
This manual contains important instructions that must be followed during placement, operation and maintenance of the unit and its components. Always supply this manual to any individual that will use this unit.

The information in this manual is accurate based on products produced at the time of publication. The manufacturer reserves the right to make technical updates, corrections and product revisions at any time without notice.

SAFETY

The words DANGER, WARNING, CAUTION, and NOTICE are used throughout this manual to highlight important information. Make sure that the meanings of this safety information is known to all who operate, perform maintenance on, or are nearthe generator.



This safety alert symbol appears with most safety statements. It means attention,become alert, your safety is involved! Please read and abide by the messagethat follows the safety alerts symbol.

The manufacturer cannot possibly anticipate every possible circumstance that might involve a hazard. The warnings in this manual and the tags and decals affixed to the unit are therefore not all-inclusive. If you use a procedure, work method or operating technique that the manufacturer does not specifically recommend you must satisfy yourself that it is safe for you and others. You must also make sure that the procedure work method or operating technique that you choose does not render the generator unsafe.

DEFINITIONS AND SYMBOLS

⚠ DANGER	⚠ WARNING	⚠ CAUTION	NOTICE
Indicates a hazard which, if not avoided, will result in death or serious injury.	Indicates a hazard which, if not avoided, could result in death or serious injury.	Indicates a hazard which, if not avoided, could result in minor or moderate injury.	Indicates information considered important, but not hazard-related (e.g.,messages relating to property damage).



Asphyxiation Hazard



Electric Shock Hazard



Fire Hazard



Explosion Hazard



Hot Surface.
Do Not Touch the Surface.
Burn Hazard



Moving Parts Hazard



Kickback



Operator's Manual

GENERAL SAFETY PRECAUTIONS

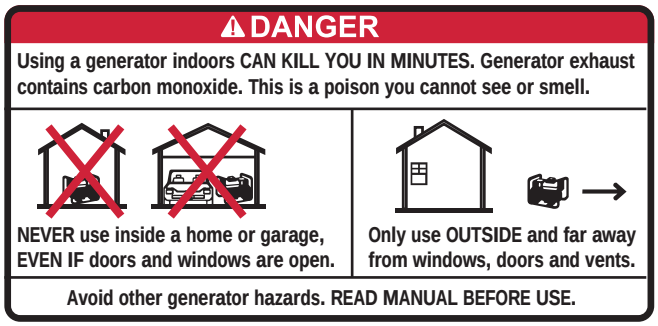

⚠ DANGER

POISONOUS GAS HAZARD



Engine exhaust contains carbon monoxide, a poisonous gas that could kill you in minutes. You **CANNOT** smell it, see it, or taste it. Even if you do not smell exhaust fumes, you could still be exposed to carbon monoxide gas.

⚠ DANGER



The exhaust system must be properly maintained. Do not alter or modify the exhaust system as to render it unsafe or make it noncompliant with local codes and/or standards. Failure to do so will result in death or serious injury.

⚠ WARNING



Always, install battery operated carbon monoxide alarm indoors and installed according to the manufacturer's instruction.

- Operate this product **ONLY** outside far away from windows, doors and vents to reduce the risk of carbon monoxide gas from accumulating and potentially being drawn towards occupied spaces. **DO NOT** run this product inside homes, garages, basements, crawl spaces, sheds, or other partially-enclosed spaces even if using fans or opening doors and windows for ventilation. Carbon monoxide can quickly build up in these spaces and can linger for hours, even after this product has shut off.
- **ALWAYS** place this product downwind and point the engine exhaust away from occupied spaces. If you start to feel sick, dizzy, or weak while using this product, shut it off and get to fresh air RIGHT AWAY. See a doctor. You may have carbon monoxide poisoning.

⚠ WARNING

If you start to feel sick, dizzy or weak while using the portable generator, you may have carbon monoxide poisoning. Get out side to fresh air immediately and call 911 for emergency medical attention. Very high levels of CO can rapidly cause victims to lose consciousness before they can rescue themselves. **DO NOT** attempt to shut off the generator before moving to fresh air. Entering an enclosed space where a generator is or has been running may put you at greater risk of CO poisoning.

CORRECT USAGE

Example location to reduce risk of carbon monoxide poisoning

- Operate generators outside and at least 20 feet away from any structure with exhaust pointed away from doors and windows.

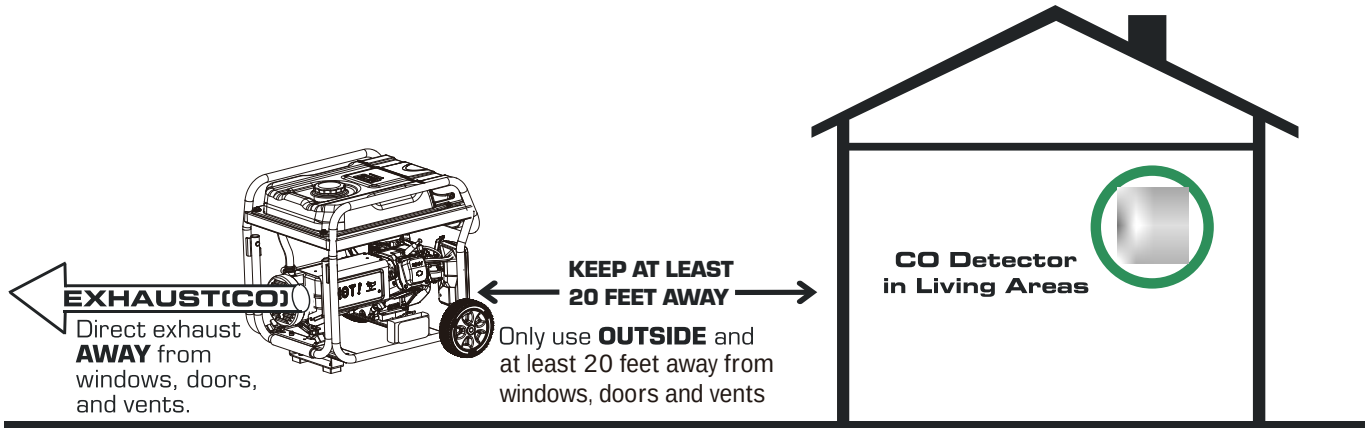

INCORRECT USAGE

Do not operate in any of the following locations:

- Near any door, window or vent
- Garage
- Basement
- Crawl Space
- Living Area
- Attic
- Entry Way
- Porch
- Mud Room

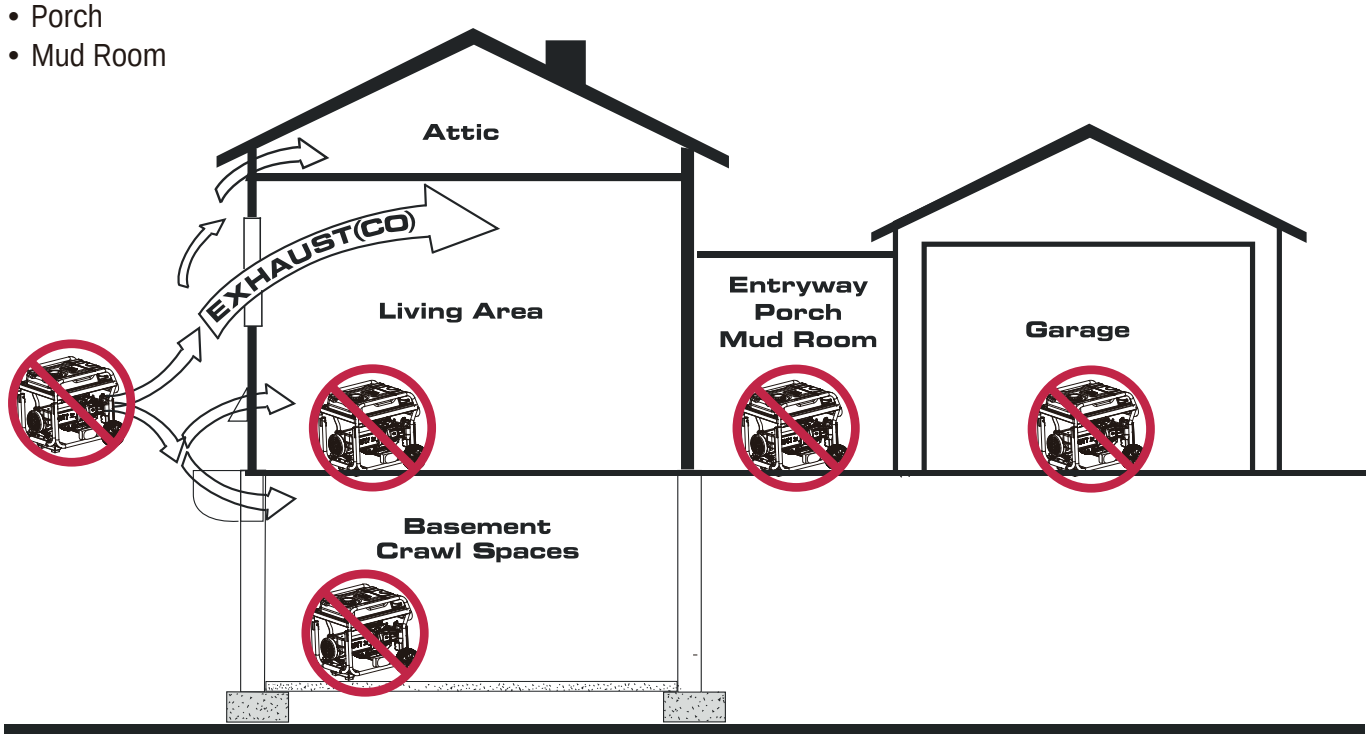

⚠ WARNING



Starter cord kickback (rapid retraction) will pull hand and arm toward engine faster than you can let go which could cause broken bones, fractures, bruises, or sprains resulting in serious injury.

- When starting engine, pull cord slowly until resistance is felt and then pull rapidly to avoid kickback.
- **NEVER** start or stop engine with electrical devices plugged in and turned on.

Fuel Safety

⚠ DANGER



Gasoline, gasoline vapor and propane/LPG are highly flammable and explosive.Fire or explosion can cause severe burns or death.

⚠ DANGER



Do not overfill tank. Allow space for fuel expansion. If fuel spills wait until it evaporates before starting engine. Failure to do so will result in death and serious injury.

Gasoline and gasoline vapors

- Gasoline is a liquid and can cause a fire or explosion if ignited. Gasoline vapors can ignite as well.
- Gasoline is a skin irritant and needs to be cleaned up immediately if spilled on skin or clothes.
- Gasoline has a distinctive odor; this will help detect potential leaks quickly.
- In case of a petroleum gas fire, do not attempt to extinguish the flame if the fuel supply valve is in the ON position. Introducing an extinguisher to a generator with an open fuel supply valve could create an explosion hazard.
- Gasoline expands or contracts with ambient temperatures. Never fill the gasoline tank to full capacity, as gasoline needs room to expand if temperatures rise.

Propane/LPG (Liquid Petroleum Gas)

- Propane/LPG is highly flammable and explosive.
- LPG is heavier than air and can settle in low places while dissipating.
- Propane/LPG has a distinctive odor added to help detect potential leaks quickly.
- In case of a petroleum gas fire, do not attempt to extinguish the flame if the fuel supply valve is in the ON position. Introducing an extinguisher to a generator with an open fuel supply valve could create an explosion hazard.
- When exchanging propane/ LPG cylinders, be sure the cylinder valve is of the same type.
- Always keep the propane/LPG cylinder in an upright position.
- Propane/LPG will burn skin if it comes in contact with it. Keep it away from skin at all times.

WHEN ADDING OR DRAINING GASOLINE

- Turn generator engine off and let it cool at least 2 minutes before removing gasoline cap. Loosen cap slowly to relieve pressure in gasoline tank.
- Only fill or drain gasoline tank outdoors in a well-ventilated area.
- **DO NOT** overfill gasoline tank. Allow space for fuel expansion.
- If gasoline spills, wipe spilled gasoline from the unit or wait until it evaporates before starting engine.
- Keep fuel away from sparks, open flames, pilot lights, heat, and other ignition sources.
- Check fuel lines, tank, cap, and fittings frequently for cracks or leaks. Replace if necessary.
- **DO NOT** light a cigarette or smoke.
- **DO NOT** pump gasoline directly into the generator at the gas station. Use an approved container to transfer the gasoline to the generator.

WHEN STARTING GENERATOR

- Ensure spark plug, exhaust system, gasoline cap, fuel lines, propane/LPG regulator and air filter are in place.
- Wipe spilled gasoline or wait until it evaporates before starting engine.
- Make certain that the generator is operating firmly on level ground.
- If you smell gasoline or propane, turn off all fuel supplies. Make certain, there is no fuel leak before operating the generator.

⚠ DANGER



Gasoline, gasoline vapor and propane/LPG are highly flammable and explosive.
Never use a gasoline container, gasoline tank, propane/LPG connector hose, propane/LPG cylinder or any other fuel item that is broken, cut, torn or damaged. Failure to do so will result in death and serious injury.

WHEN OPERATING THE GENERATOR

- **DO NOT** operate the generator inside any building, carport, porch, mobile equipment, marine applications, or enclosure.
- **DO NOT** tip the generator at angle which causes fuel to spill.
- **DO NOT** move the generator when is running.

⚠ DANGER



Gasoline, gasoline vapor and propane/LPG are highly flammable and explosive.
Fire or explosion can cause severe burns or death. Do not refill the gasoline tank or replace the propane/LPG tank when the generator is operating.

WHEN TRANSPORTING, MOVING OR REPAIRING EQUIPMENT

- Transport/move/repair with fuel tank EMPTY or with fuel shutoff valve in OFF position. On dual fuel models, be sure the propane tank is disconnected and securely away from the generator.
- **DO NOT** tip generator at angle which causes fuel to spill.
- Disconnect spark plug wire.

WHEN STORING FUEL OR GENERATOR WITH FUEL IN TANK

- Store away from furnaces, stoves, water heaters, clothes dryers, or other appliances that have pilot light or other ignition source because they could ignite fuel vapors.
- Store Fuel in a container approved for gasoline.
- Store any containers containing gasoline or propane/LPG outdoor in a well-ventilated area, away from any combustibles or source of ignition.

⚠ DANGER



Generator voltage could cause electrical shock or burn will result in death or serious injury.

⚠ DANGER



Never use generator in wet or damp locations. Never expose generator to rain, snow, water spray while in use. Protect generator from all hazardous weather conditions. Moisture, or ice can cause a short circuit or other malfunction in the electric circuit. Water contact with a power source if not avoided, will result in death or serious injury.

⚠ DANGER



Contact with terminals, bare wires and electrical connections when generator is running will result in death or serious injury.

⚠ DANGER



Fire and electrocution hazard. Do not connect to a building's electrical system unless the generator and transfer switch have been properly installed and the electrical output has been verified by a qualified electrician. The connection must isolate the generator power from utility power and must comply with all applicable laws and electrical codes.

- Use a ground fault circuit interrupter (GFCI) in any damp or highly conductive area, such as metal decking or steel work.
- **DO NOT** use generator with electrical cords which are worn, frayed, bare or otherwise damaged.
- **DO NOT** allow unqualified persons or children to operate or service generator.

⚠ WARNING



Exhaust heat/gases could ignite combustibles, structures or damage fuel tank causing a fire, resulting in death or serious injury.
Contact with muffler area could cause burns resulting in serious injury.

⚠ WARNING



When operating machine, do not touch hot surfaces. Keep machine away from combustibles during use. Hot surfaces could result in severe burns or fire.

- Allow equipment to cool before touching.
- Replacement parts must be the same and installed in the same position as the original parts.
- It is a violation of California Public Resource Code, Section 4442, to use or operate the engine on any forest-covered, brush-covered, or grass-covered land unless the exhaust system is equipped with a spark arrester, as defined in Section 4442, maintained in effective working order. Other states or federal jurisdictions may have similar laws. Contact the original equipment manufacturer, retailer, or dealer to obtain a spark arrester designed for the exhaust system installed on this engine.

⚠ WARNING



Unintentional sparking could cause fire or electric shock resulting in death or serious injury.

WHEN ADJUSTING OR MAKING REPAIRS TO YOUR GENERATOR

- Disconnect the spark plug wire from the spark plug and place the wire where it cannot contact spark plug.

WHEN TESTING FOR ENGINE SPARK

- Use approved spark plug tester.
- **DO NOT** check for spark with spark plug removed.

⚠ WARNING



Starter and other rotating parts could entangle hands, hair, clothing, or accessories. Keep away from rotating parts, failure to do so could result in death or serious injury.

- **DO NOT** wear loose clothing, jewelry or anything that could be caught in the starter or other rotating parts.

⚠ CAUTION

Excessively high operating speeds could result in minor injury. Excessively low operating speeds impose a heavy load.

- **DO NOT** tamper with governor spring, links or other parts to increase engine speed. Generator supplies correct rated frequency and voltage when running at governed speed.
- **DO NOT** modify generator in any way.

NOTICE

Exceeding generators wattage/amperage capacity could damage generator and/or electrical devices connected to it.

- **DO NOT** exceed the generator's wattage amperage capacity.
- Start generator and let engine stabilize before connecting electrical loads.
- Connect electrical loads in OFF position, then turn ON for operation.
- Turn electrical loads OFF and disconnect from generator before stopping generator.

NOTICE

Improper treatment of generator could damage it and shorten its life.

- Use generator only for intended uses.
- If you have questions about intended use, ask dealer or contact local service center.
- Operate generator only on level surfaces.
- **DO NOT** expose generator to excessive moisture, dust, dirt, or corrosive vapors.
- **DO NOT** insert any objects through cooling slots.
- If connected devices overheat, turn them off and disconnect them from generator.

- Shut off generator if:
  -Electrical output is lost.
  -Equipment sparks, smokes, or emits flames.
  -Unit vibrates excessively.

⚠ WARNING

Medical and Life Support Uses.

- In case of emergency, call 911 immediately.
- NEVER use this product to power life support devices or life support appliances.
- NEVER use this product to power medical devices or medical appliances.
- Inform your electricity provider immediately if you or anyone in your household depends on electrical equipment to live.
- Inform your electrical provider immediately if a loss of power would cause you or anyone in your household to experience a medical emergency.

Button/Coin Battery Safety

⚠WARNING

- **INGESTION HAZARD:** This product contains a button cell or coin battery.
- **DEATH** or serious injury can occur if ingested.
- A swallowed button cell or coin battery can cause **Internal Chemical Burns** in as little as **2 hours**.
- **KEEP** new and used batteries **OUT OF REACH OF CHILDREN**
- **Seek immediate medical attention** if a battery is suspected to be swallowed or inserted inside any part of the body.





This symbol means:
INGESTION HAZARD: This product contains a button cell or coin battery.

1. Remove and immediately recycle or dispose of used batteries according to local regulations and keep away from children. Do NOT dispose of batteries in household trash or incinerate.
2. Even used batteries may cause severe injury or death.
3. Call a local poison control center for treatment information.
4. Non-rechargeable batteries are not to be recharged.
5. Do not force discharge, recharge, disassemble, heat above 140° Fahrenheit or incinerate. Doing so may result in injury due to venting, leakage or explosion resulting in chemical burns.
6. Battery spec in CO sensor: CR2032 / 3V

SAFETY AND DATAPLATE LABELS

These labels warn you of potential hazards that can cause serious injury. Read them carefully.
If a label comes off or becomes hard to read, contact Technical Support Team for possible replacement.

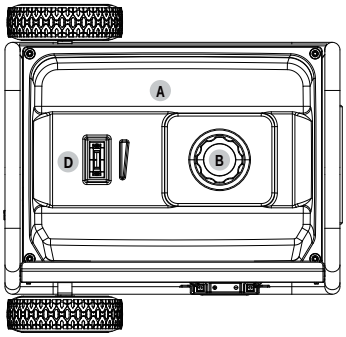

Top

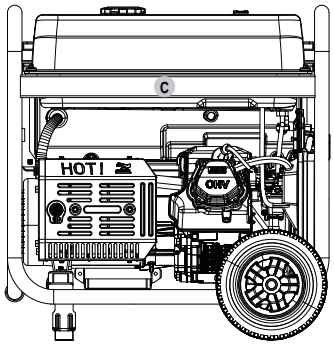

Side

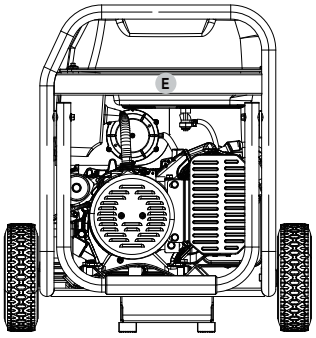

Front

	LABEL	DESCRIPTION
A		CO - Watch Guard action automatic shutoff *See CO Watch Guard action section Carbon Monoxide
B		Fuel
C		Hot Surface
D	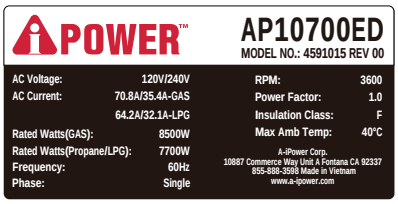	Nameplate
E		Safety Symbols

UNPACKING THE GENERATOR

- Open carton completly. Remove and verify carton content prior to assembly. Your generator ships with following items.
- Call our customer service at 855-888-3598 with the unit model and serial number for any missing item.
- Record model, serial number, and date of purchase on front cover of this munual for your own record.

Parts Included

Your generator ships with the following parts:

NO.	Item Description	Qty
1	Wheels	2
2	Axle Pin	2
3	Flat Washer	2
4	Cotter Pin	2
5	Flange Bolt (M8*16)	2
6	Flange Lock Nut (M8)	2
7	Support Leg with Vibraion Mounts	1
8	Spark Plug Wrench	1
9	Oil Bottle (1.0L)	1
10	Owner's Manual	1
11	Quick Start Guide	1
12	Double Open Wrench(8mm-10mm)	1
13	Double Open Wrench(13mm-15mm)	1
14	Oil Funnel	1
15	Propane/LPG Hose with Regulator	1

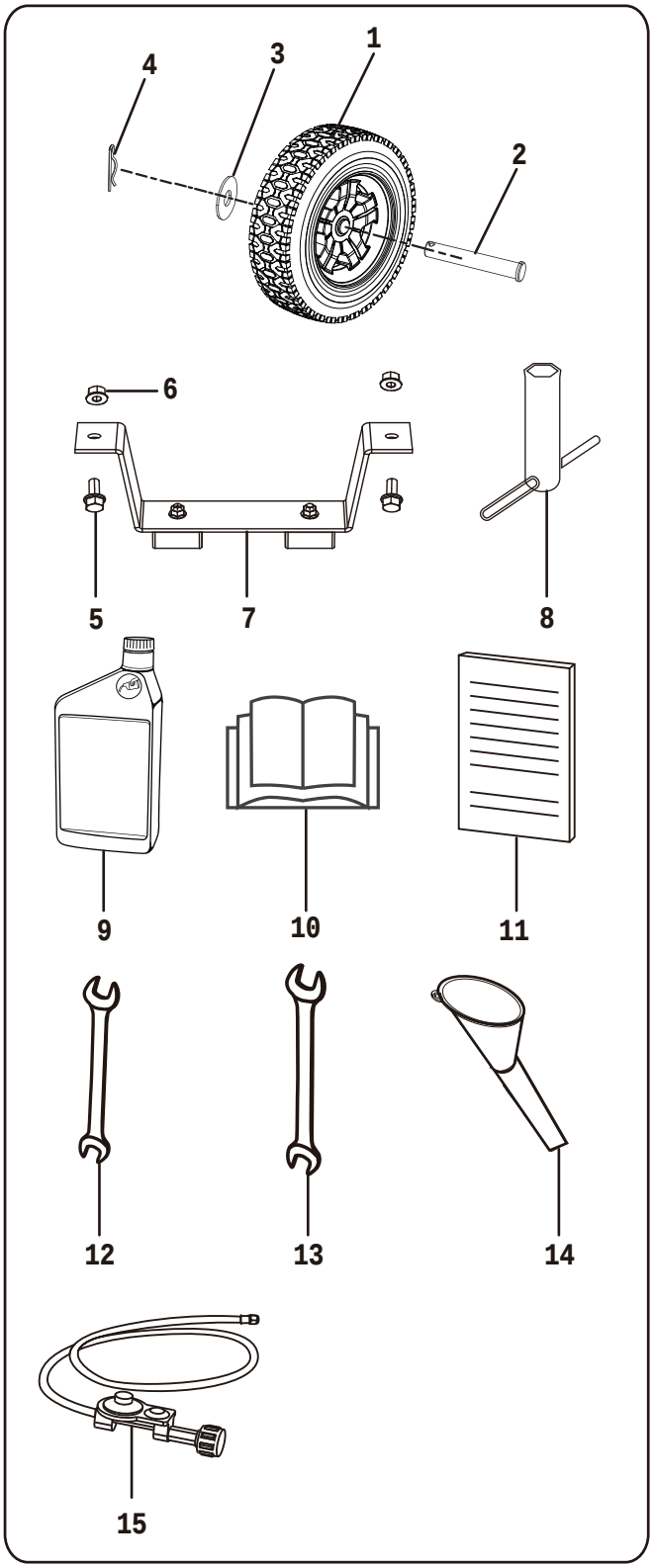

ASSEMBLY

Your generator requires some assembly prior to usage.

⚠ CAUTION

Assembly the generator will require lifting the unit. Always have assistance when lifting the generaotor.

⚠ WARNING

Do not plug in or turn on the generator until it is fully assembled according to the instructions. Failure to completely understand manual and product could result in death or serius injury.

Call our customer service at 855-888-3598 for any assembly issues or concerns. Please have model and serial number available.

Install the Wheel Kit

NOTE:

The wheels are not intended for over-the-road use.

1 - place generator on a flat surface.

2 - Tip the generator on a piece of cardboard or other soft material to protect the frame paint and prevent the generator from sliding.

3 - Slide axle pin (A) through the wheel (B), flat washer (C) and generator frame axles hole (D).

4 - Secure everything with cotter pin (E). Repeat on opposite side.

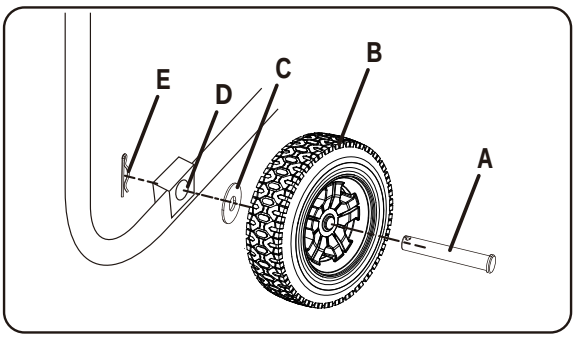

Install the Support Leg

5 - Insert bolts (F) throught the support leg (G) and holes on the generator frame as shown.

6 - Tighten bolts (F) and nuts (H) to the frame.

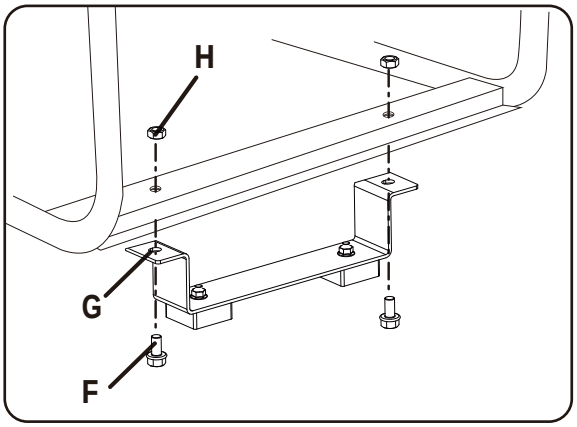

NOTE:

Handle already is assembled on the unit.

Battery Cable Connection

A quick connect battery plug is pre-installed on the battery.Cut the cable tie securing the plugs and push two halves A and B firmly to connect them.

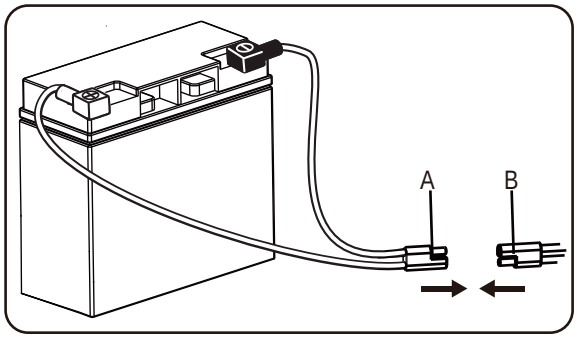

NOTICE

The generator is equipped with a battery charging feauture. Once the engine is running,a small charge will slowly recharge the battery.

If you do not plan to use the generator for a long period of time,we recommend to DISCONNECT the battery plugs A and B to protect the battery from losing charge,You may also to use a battery float charger (not included) to maintain battery charge.

IMPORTANT: Before operating the generator the shock-absorbing seat (K) must be adjusted for clearance. Loosen the lock nut (L) and adjust the shock absorbing seat (K) so there is about 3-4mm gap between the top of the seat and the bottpm of the alternator bracket (M). Re-tighten the lock nut after adjustment.

ASSEMBLY

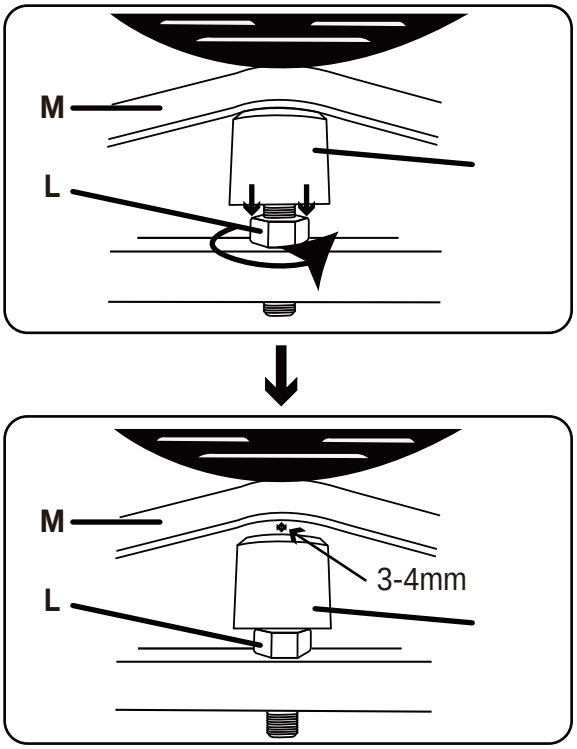

CONTROLS AND FEATURES

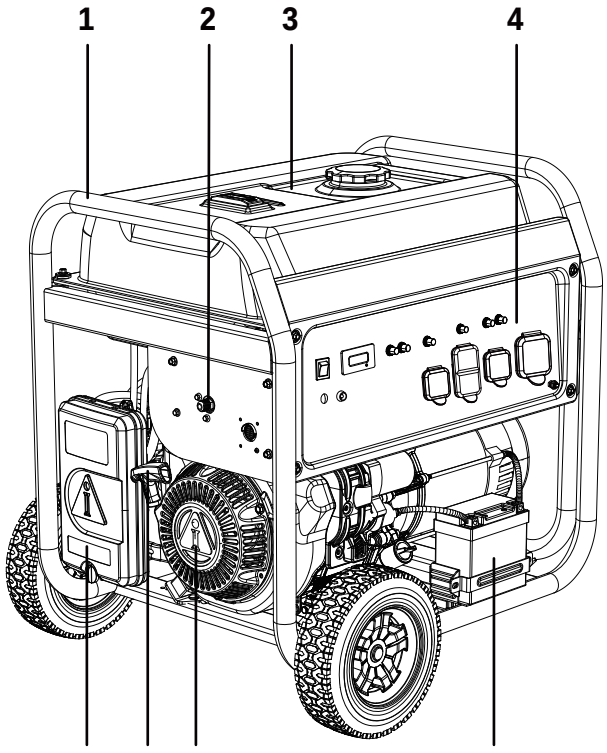

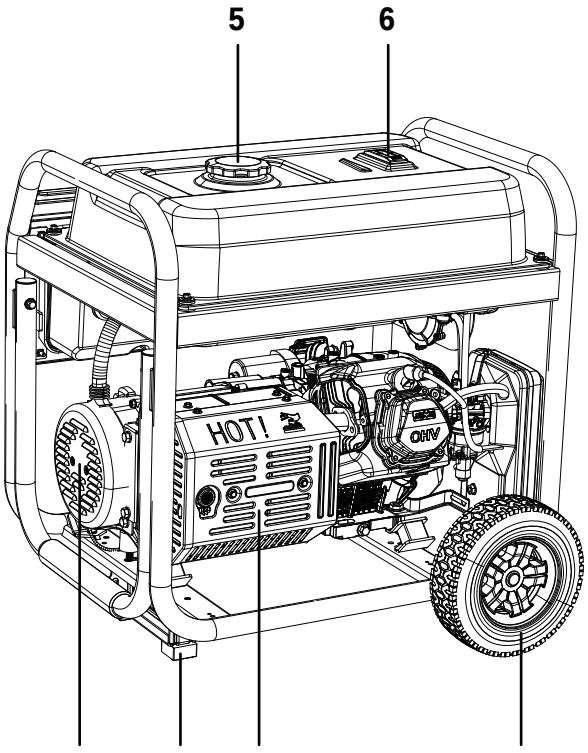

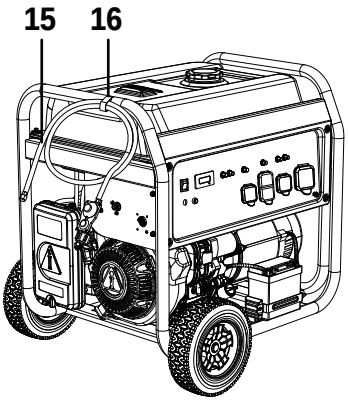

1 - Frame
2 - Propane/LPG Inlet
3 - Fuel Tank
4 - Control Panel
5 - Fuel Cap
6 - Fuel Gauge
7 - Air Filter
8 - Recoil Starter
9 - Engine
10 - Battery
11 - Alternator Cover
12 - Support Leg
13 - Muffler/Spark Arrestor
14 - Wheel
15 - LPG Hose with Regulator
16 - Hose Holder

CONTROL PANEL FEATURES

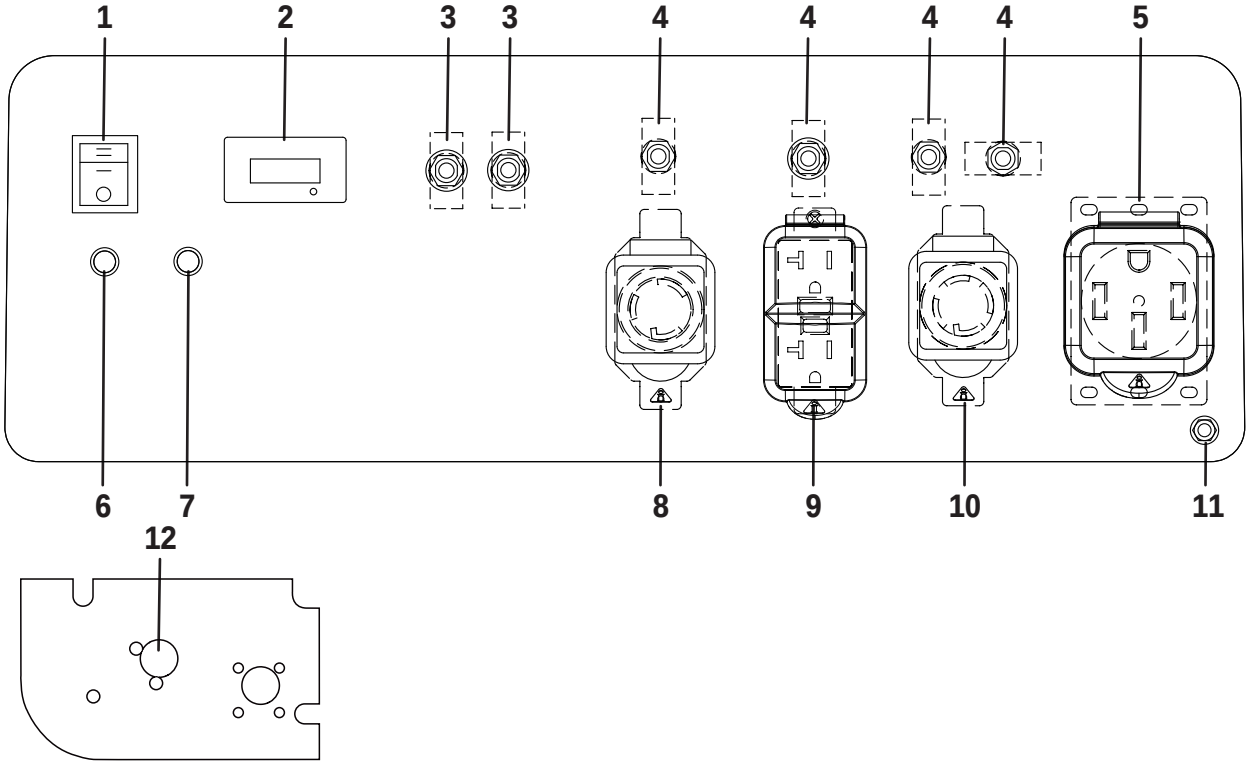

1. Engine Control Switch: Flip the switch to the "ON" (I) position and pull the recoil for recoil start. Press and hold on the "START"(II) position and release it to "ON" (I) position after few seconds for electric start. Turn to the "OFF"(0) position to turn off the generator.

2. Data Center: Push the SELECT button to display the voltage (V), frequency (Hz) and total run time(Hour).

3. Main Circuit Breaker(AC): Protects the generator against electrical overloads.

4. Circuit Breaker(AC): Protects the generator against electrical overloads.

5. 120/240V AC, 50A, Single Phase, 60 Hz Outlet (NEMA 14-50R): This outlet can supply either 120 Volt or 240 Volt output up to 50 amps.

6. Low Oil Indicator: The Light will be illuminated when the engine oil level is low. Add oil.

7. CO (Carbon Monoxide) WATCH-GUARD Indicator Light (Red for Shut off and Yellow for Service): The CO (Carbon Monoxide) WATCH-GUARD monitors for the accumulation of poisonous CO gas around the generator produced by engine exhaust when the generator is running. If the CO WATCH-GUARD detects increasing levels of CO gas, it automatically shuts off the engine. See CO WATCH-GUARD section for more information.

8. 120V AC, 30A Twist Lock outlet, single phase, 60Hz Outlet (NEMA L5-30R): This receptacle can provide120 volt output up to 30 amps.

9. 120V AC, 20A Duplex, GFCI, Single Phase, 60Hz Outlets (5-20R): Each outlet is capable of carrying a maximum of 20 amps on a single outlet or a combination of both outlets.

10. 120/240V AC, 30A Twist Lock, Single Phase, 60Hz Outlet (NEMA L14-30R): Supply either 120 Volt or 240 Volt output up to 30 amps.

11. Grounding Terminal: To ground the generator.

12. Propane/LPG Inlet: Used to connect Propane/LPG hose to generator.

NOTE: Total power drawn from all outlets must not exceed the nameplate rating.

SPECIFICATIONS

AP10700ED	
Model	4591015
Starting Watts (Gas)	10700W
Running Watts (Gas)	8500W
Starting Watts (Propane/LPG)	9600W
Running Watts (Propane/LPG)	7700W
Rated AC Voltage	120/240V
Rated DC Voltage	NO
Rated Frequency	60HZ
Phase	Single
Grounding System (AC)	Neutral Bonded to Frame
Engine Type	Single Cylinder, 4-Stroke OHV Air Cooled
Engine Displacement	459cc
Starting System	Recoil-Electric
Low Oil Shutdown	Yes
Oil Type	10W-30
Oil Capacity	37.2 fl.oz (1.1L)
Spark Plug OEM Type	F7TC
Spark Plug Replacement Type	NGK BPR7ES or Champion RN9YC
Spark Plug Gap	0.028～0.031inch (0.7～0.8mm)
Valve Intake Clearance	0.004～0.006inch (0.1～0.15mm)
Valve Exhaust Clearance	0.006～0.008inch (0.15～0.2mm)
Voltage Regulation System	AVR
Alternator Excitement System	Brushed
Total Harmonic Distortion (THD)	＜23%
Fuel Tank Capacity	10.8 Gal (41.00 L)
Fuel Type	Gasoline-Propane/LPG
Maximum Ambient Temperature	104°F (40°C)
Battery Spec	12V, 9AH
Certifications	EPA Compliant

NOTICE

This product is designed and rated for continuous operation at ambient temperatures up to 104°F(40°C). If needed, this product can be operated at temperatures ranging from 5°F(-15°C) - 122°F(50°C) for short periods. If the product is exposed to temperatures outside of this range during storage, it should be brought back within this range before operation. This product must always be operated outdoors in awell-ventilated area and at least 20 feet away from doors, windows, and other vents.

Maximum wattage and current are subject to and limited by such factors as fuel BTU content, ambient temperature, altitude, engine conditions, etc. Maximum power decreases about 3.5% for each 1,000 feet above sea level, and will also decrease about 1% for each 10°F(6°C) above 60°F(16°C) ambient temperature.

CO WATCH-GUARD

Carbon Monoxide (CO) Detection and Auto Shutoff System

Your Generator is equipped with Carbon Monoxide (CO) WATCH-GUARD detect system for your protection and safety. This detecting and shutoff system monitors for the accumulation of poisonous CO gas around the generator produced by engine exhaust when the generator is running. If the CO sensor detects increasing levels of CO gas, it automatically shuts off the engine.

Generators are intended to be used outdoors and at least 20 feet away from occupied buildings, windows, doors and exhaust pointed away from them.

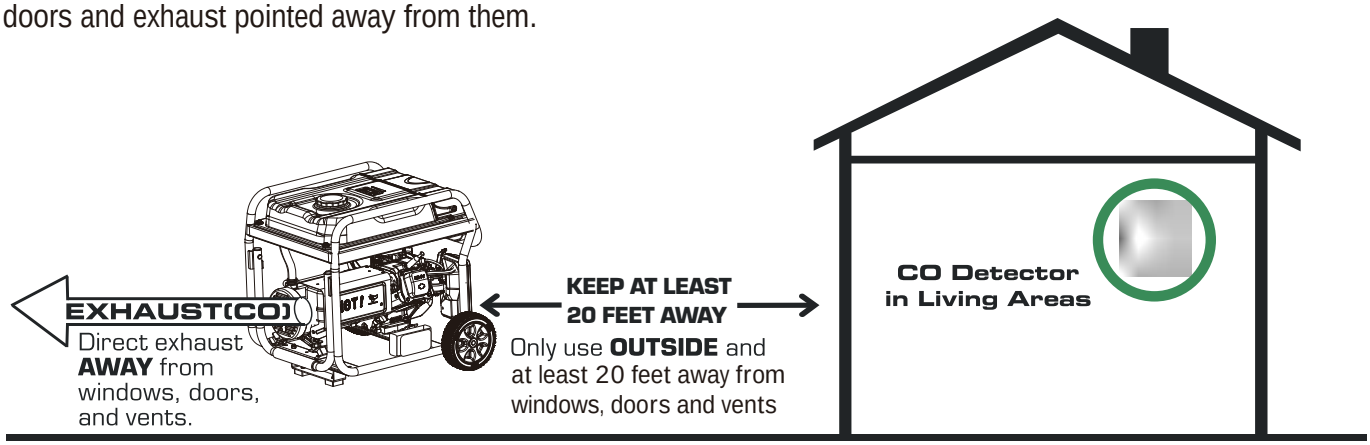

However, if the generator misused and operated in a location that results in the accumulation of CO inside an enclosed or partially enclosed space, CO WATCH- GUARD automatically shuts off the engine and notifies the user of what has happened and directs the user to read the instruction of CO WATCH-GUARD Action Label for steps to take.

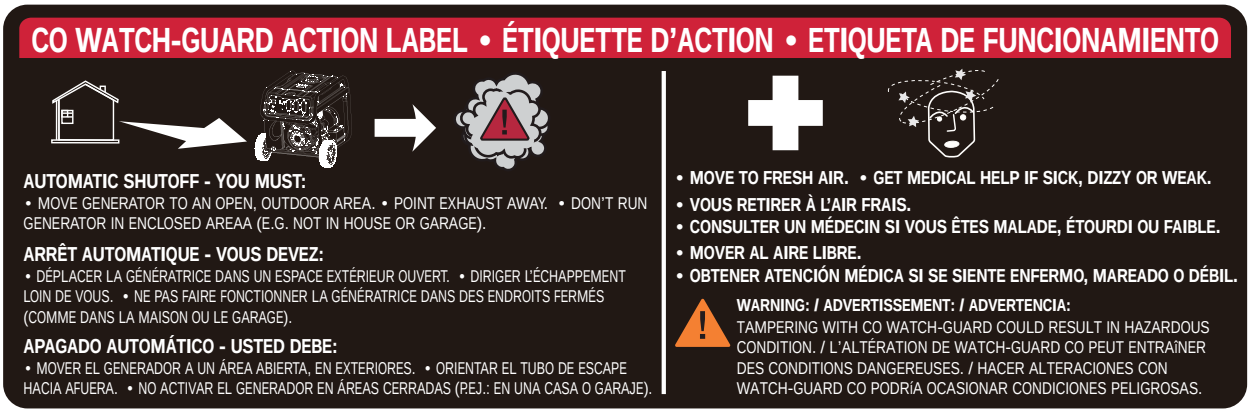

NOTIFICATIONS: BLINKING RED AND YELLOW LIHGT

There is a CO indicator light on the control panel with two possibilities:

1-Blinking Red Light provides notification that the generator was shutoff due to an accumulating CO level around the generator. The red light will blink for at least five minutes after a CO shut off. Automatic shutoff is an indication generator was improperly located. Move the generator to an open, outdoor area far from occupied spaces with exhaust pointed away. Once relocated to a safe area, the generator can be restarted. The red light will stop blinking automatically after 2-5 seconds upon engine re-start.

If you start to feel sick, dizzy, weak, or your homes carbon monoxide alarm sounds while using the generator, get to fresh air right away. Call emergency services. You may have carbon monoxide poisoning.

⚠ WARNING

DO NOT modify or tamper with the Carbon Monoxide Detecting System (CO WATCH-GUARD). Not following these instructions could result in death or serious injury due to Carbon Monoxide detecting system malfunction.

CO WATCH-GUARD will detect the accumulation of carbon monoxide from other fuel burning sources such as engine powered tools used in the area of operation. If another generator is used and the exhaust is pointed at a CO WATCH-GUARD equipped generator, the CO WATCH-GUARD may initiate a shutoff due to rising carbon monoxide levels. This is not a fault. Hazardous carbon monoxide has been detected. You must take action to move and direct the equipment to better dissipate carbon monoxide far away from people or buildings.

CO WATCH-GUARD only monitors when the generator is running.
CO WATCH-GUARD **DOES NOT** replace carbon monoxide alarms.
Tempering with the CO WATCH-GUARD will void your warranty.

⚠ WARNING

Tampering with CO WATCH-GUARD could result in a hazardous condition. Removing the CO WATCH-GUARD module will not allow the generator to start.

120V AC, 20A Duplex GFCI

Your generator is equipped with ground fault circuit interrupter (GFCI) receptacles. In the event of a ground fault, a GFCI trips automatically to stop the flow of electricity and prevent serious injury. The LED Indicator Light on the receptacle will be turn off. Press the “RESET” button located on the front of the receptacle to restore flow of electricity. GFCI does NOT protect against circuit overloads. To ensure proper operation of the GFCI duplex, perform this test monthly:

1. With the generator running, plug a test lamp into the GFCI receptacle. Turn the lamp on.
2. Press the “TEST” button located on the front of the receptacle to trip the device. This should immediately stop the flow of electricity and shut off the lamp. If the electricity is not stopped, do not use this receptacle until it has been serviced or replaced.
3. Press the “RESET” button located on the front of the receptacle to restore the flow of electricity. If the LED Indicator Light does not come back or GFCI cannot be reset, then it must be replaced.

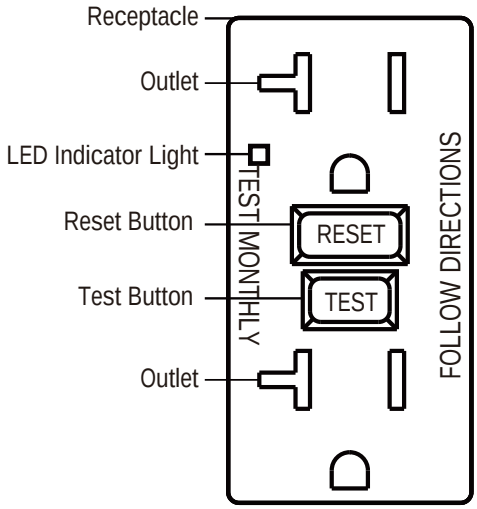

Add Engine Oil

We recommend using SAE 10W-30 APISJ oil for best performance. Other high-quality detergent oils (APISJ or higher) are acceptable. Do not use special additives. Ambient temperature determines the proper oil viscosity for the engine. Use the chart to select the proper oil for the outdoor temperature range expected.

NOTICE

Do not attempt to crank or start the engine before it has been properly filled with the recommended type and amount of oil. Damage due to operation with no oil will void your warranty.

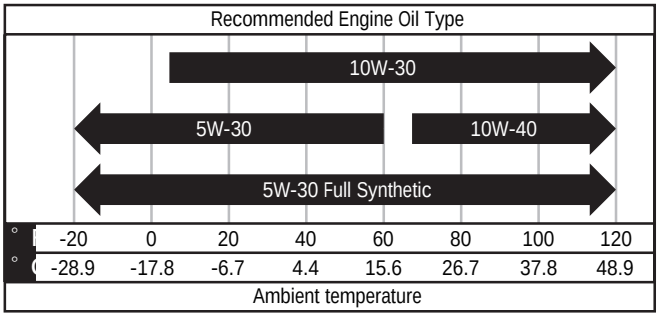

1. Place generator on a flat, level surface.
2. Clean area around oil fill and remove yellow oil fill cap/dipstick (A).
3. Wipe dipstick clean.
4. Using oil funnel, slowly pour contents of provided oil bottle into oil filler neck (B) to the "H" mark on dipstick. Be careful do not overfill. Overfilling with oil could cause the engine to not start or hard starting.
5. Replace oil fill cap/dipstick (A) and fully tighten.
6. Oil level should be checked prior to each use or at least every 8 hours of operation. Keep oil level maintained.

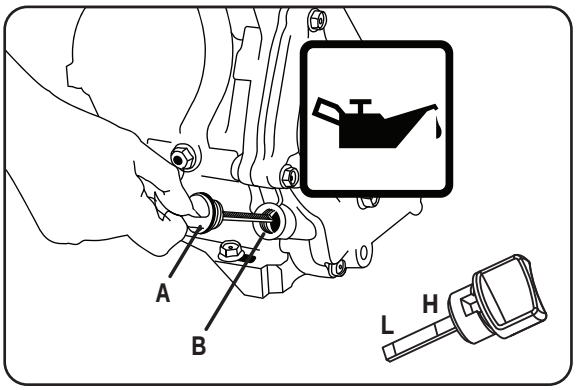

The engine is equipped with a low oil shut-off and will stop when the oil level in the crankcase falls below the threshold level.

NOTICE

We consider the first 5 hours of run time to be the break-in period for the unit. During the break in period stay at or below 50% of the running watt rating and vary the load occasionally to allow stator windings to heat and cool. Adjusting the load will also cause engine speed to vary and help seat piston rings.

Low Oil Shutdown

The unit is equipped with a low oil shutdown. If the oil level becomes lower than required, the sensor will activate a warning device or stop the engine.
If generator shuts off and the oil level is within specifications, check to see if generator is sitting at an angle that forces oil to shift. Place on an even surface to correct this. If engine fails to start, the oil level may not be sufficient to deactivate low oil level switch. Make sure the sump is completely full of oil.

Add Fuel:Gasoline

⚠ DANGER



Gasoline and gasoline vapor are highly flammable and explosive.Fire or explosion can cause severe burns or death.

⚠ DANGER



Do not overfill tank. Allow space for fuel expansion. If fuel spills wait until it evaporates before starting engine. Failure to do so will result in death and serious injury.

Gasoline must meet these requirements:

- Clean, fresh, unleaded gasoline.
- Use regular UNLEADED gasoline with the generator engine with a minimum 87 octane / 87 AKI (91RON). Do not use E85 or E15. For high altitude use, see "Operation at High Altitude".
- **DO NOT** mix oil in gasoline.
- **DO NOT** modify engine to run on alternate fuels

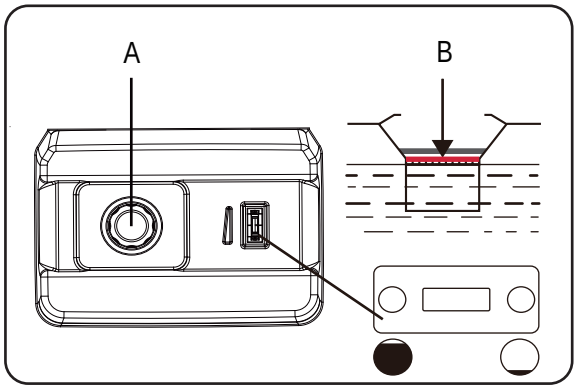

1. Remove the gasoline cap (A) slowly.
2. Slowly add unleaded gasoline to gasoline tank. Be careful not to fill above the red fuel level indicator (B). This allows adequate space for fuel expansion.
3. Install gasoline cap and let any spilled fuel evaporate before starting engine or wipe the spilled gasoline.

WHEN ADDING GASOLINE

- Only fill the gasoline tank outdoors in a well-ventilated area.
- **DO NOT** overfill gasoline tank. Allow space for fuel expansion.
- If gasoline spills, wipe spilled gasoline from the unit or wait until it evaporates before starting engine.
- Keep fuel away from sparks, open flames, pilot lights, heat, and other ignition sources.
- Check fuel lines, tank, cap, and fittings frequently for cracks or leaks. Replace if necessary.
- **DO NOT** light a cigarette or smoke.
- **DO NOT** fill the tank when the generator is running or hot.
- **DO NOT** pump gasoline directly into the generator at the gas station. Use an approved container to transfer the gasoline to the generator.

NOTICE

- Only fill the tank from an approved gasoline container. Make sure the gasoline container is internally clean and in good condition to prevent fuel system contamination.
- Gasoline can damage paint and plastic. Use caution when filling the fuel tank. Damage caused by spilled gasoline is not covered under warranty.
- Clean the fuel screen filter of debris before and after each fueling. Remove the fuel screen filter by slightly compressing it while removing it from the fuel tank.
- It is important to prevent gum deposits from forming in fuel system parts such as the carburetor, fuel hose or tank during storage. Alcohol-blended fuels (called gasohol, ethanol or methanol) can attract moisture, which leads to separation and formation of acids during storage. Acidic gas can damage the fuel system of an engine while in storage. To avoid engine problems, the fuel system should be emptied before storage of 30 days or longer. See the "Long Term Storage" section. Never use engine or carburetor cleaner products in the fuel tank as permanent damage may occur.

Add Fuel: Propane/LPG

⚠ DANGER



Propane/LPG is highly flammable and explosive. Fire or explosion can cause severe burns or death.

- The provided propane/LPG hose with regulator, works with standard 20, 30 and 40 pound capacity cylinders with Type 1, right hand Acme threads. Verify the re-qualification date on the tank has not expired. Do not use rusted or damaged cylinders.
- Only use provided propane/LPG hose for safe propane operation.

1. Make certain both gasoline and propane/LPG valves are closed.
2. Remove the rubber protective plugs (if it is avaiable) and attach the propane/LPG hose with regulator to the propane/LPG inlet located on the side control panel of the generator. Tighten with a 19mm or adjustable wrench. DO NOT over-tighten.
3. Remove safety plug from the propane/LPG cylinder valve (if it is available) and attach the other end of the propane/LPG hose with regulator to cylinder valve. Tighten the nut by hand clockwise to a positive stop.

IMPORTANT: DO NOT use thread seal tape or any type of sealant to seal the propane LPG hose connections.

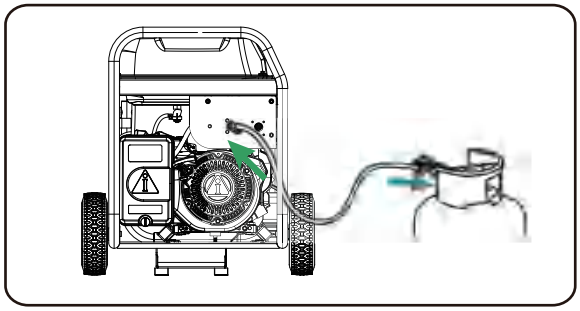

4. Open valve on propane LPG cylinder and check all connections for leaks by wetting the fittings with a solution of soap and water. Bubbles which appear or bubbles which grow indicate that a leak exists. If a leak exists at a fitting, then turn off the valve on the cylinder and tighten the fitting. Turn the valve back on and recheck the fitting with the soap and water solution. If the leak continues or if the leak is not at a fitting, then do not use the generator and contact customer service.

NOTICE

- Use only an approved LPG cylinder equipped with an OPD (overfilling prevention device) valve.
- **DO NOT** check for leaks with a lighted match or flame.
- The propane cylinder valve should be fully closed when the generator is not in use or is running with gasoline.
- The regulator/hose assembly and cylinder valve must be inspected before each use for leaks or sign of damages.
- All new cylinders must be purged of air and moisture prior to filling. Used cylinders that have not been plugged or kept closed must also be purged. The purging process should be done by your propane gas supplier.
- Propane/LPG is heavier than air and can accumulate in confined spaces and low places in the event of a leak
- Propane/LPG has a distinctive odor added to help detect potential leaks quickly.
- In case of a petroleum gas fire, do not attempt to extinguish the flame if the fuel supply valve is in the ON position. Introducing an extinguisher to a generator with an open fuel supply valve could create an explosion hazard.
- When exchanging propane/ LPG cylinders, be sure the cylinder valve is of the same type.
- Always keep the propane/LPG cylinder in an upright position.
- Propane/LPG will burn skin if it comes in contact with it. Keep Propane/LPG away from skin at all times.
- Always position the cylinder so the connection between the valve and the regulator won't cause bends or kinks in the hose.
- **DO NOT** light or smoke cigarettes while you are connecting the propane/LPG cylinder.Check the fuel system periodically for leaks or signs of damages.
- In the event of an LPG fire, flames should not be extinguished unless by doing so the fuel supply valve can be turned off. If the fire is extinguished and a supply of fuel is not turned off, an explosion hazard greater than the fire hazard could be created.

⚠ DANGER



Do not start generator if you smell propane. Always fully close the propane tank valve and disconnect the propane/LPG hose from the generator when not in use.

FUEL SENSE (Automatic Fuel Selection Technology)
Your generator is equipped with FUEL SENSE technology which automatically switches fuel intake between gasoline and propane/LPG to extend runtime. Propane is a prioritized fuel which means the generator will use propane as soon as the Propane Cylinder Valve is opened. The generator will use gasoline if there is not enough propane remaining in the cylinder OR if the Propane Cylinder Valve is closed.

If you wish to use gasoline, the Starting Dial Switch should be in the ON position and the Propane Cylinder Valve should be CLOSED. Opening the Propane Cylinder Valve will immediately replace gasoline intake with propane intake.

If you wish to use propane, the Starting Dial Switch should be in the ON position and the Propane Cylinder Valve should be OPEN. Closing the Propane Cylinder Valve OR having an insufficient remaining level of propane in the cylinder will immediately replace propane intake with gasoline intake.

Operation at High Altitude

At altitudes over 5,000 feet(1524 meters), a minimum 85 octane gasoline is acceptable. Engine power and generator output will be reduced approximately 3.5% for every 1000 feet (305 m) of elevation above sea level. High altitude may cause hard starting, increased fuel consumption and spark plug fouling. To operate at high altitudes A-iPower can provide a high altitude carburetor main jet. The alternative main jet and installation instructions can be obtained by contacting Customer Support.

NOTICE

Operation using an alternative main jet at elevations lower than the recommended minimum altitude can damage the engine. For operation at lower elevations, the standard main jet supplied must be used. Operating the engine with the wrong main jet may increase exhaust emissions, fuel consumption and reduce performance.

Grounding

⚠ WARNING



Shock hazard. Failure to properly ground the generator can result in electric shock.

The national electrical requires your generator must be connected properly to an appropriate ground to help prevent electric shock.

The generator has a system ground that connects the generator frame components to the ground terminals on the AC output receptacles. There may be Federal or State regulations, local codes, or ordinances that apply to the intended use of the generator. Consult a qualified electrician, electrical inspector, or the local agency having jurisdiction. This generator is not intended to be used at a construction site or similar activity as defined by NFPA 70-2020 (NEC) section 590.6.

Connecting to a Building's Electrical System

Connections to your home’s electrical system must use a listed transfer switch installed by a licensed electrician. The connection must isolate the generator power from the utility power and comply with all applicable laws and electrical codes.

OPERATION

Generator Location

⚠ WARNING

Make sure you review each warning in order to prevent fire hazard.

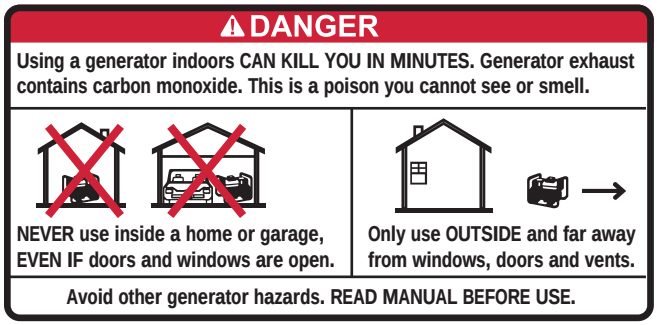

⚠ DANGER



Never use generator in wet or damp locations. Never expose generator to rain, snow, water spray or standing water while in use. Protect generator from all hazardous weather conditions. Moisture, or ice can cause a short circuit or other malfunction in the electric circuit. Water contact with a power source if not avoided, will result in death or serious injury.

- Keep area clear of inflammables or other hazardous materials.
- Select a site that is dry, well ventilated and protected from the weather.
- Keep exhaust pipe clear of foreign objects.
- Keep generator away from open flame.
- Keep generator on a stable and level surface.
- Do not block generator air vents with paper or other material.

Surge Protection

Electronic devices, including computers and many programmable appliances use components that are designed to operate within a narrow voltage range and may be affected by momentary voltage fluctuations. While there is no way to prevent voltage fluctuations, you can take steps to protect sensitive electronic equipment.
Install UL1449, CSA-listed, plug-in surge suppressors on the outlets feeding your sensitive equipment.

Surge suppressors come in single- or multi-outlet styles. They're designed to protect against virtually all short-duration voltage fluctuations.

For Cold Weather Starting

- While you must run your generator outside, you may keep the generator in a covered area to protect the generator and its battery from cold weather.
- Use proper oil for the temperature expected. Lighter weight oil (less viscosity) such as synthetic 5W-30 is recommended for cold weather applications.
- Disengage all possible external loads.
- Use fresh winter grade fuel. Winter grade fuel has higher volatility to improve starting.
- Dual fuel and tri-fuel models: It would be easier to start the engine with gasoline compared to propane (or natural gas) in cold weather. It is recommended to start your engine on gasoline and then switch to propane (or natural gas), if it is hard to start your dual fuel (or tri-fuel) generator with propane (or natural gas).

Before Starting the Generator

- Make certain the generator is on a flat, level surface and well-ventilated location. Check for loose or missing parts and for any damage which may have occurred during shipment.
- Check oil level and connect the battery cable.

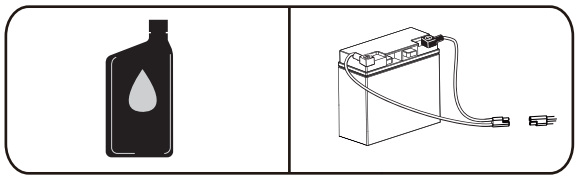

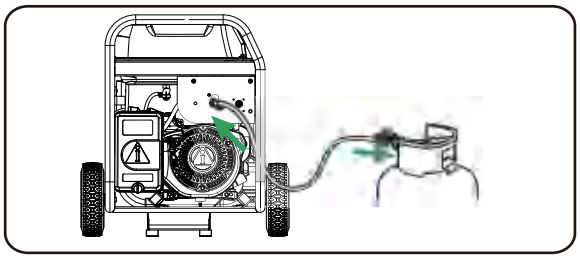

- Disconnect all electrical loads from the generator. Never start or stop the generator with electrical devices plugged in or turned on.

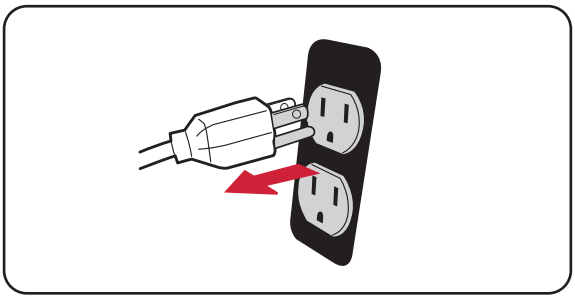

Starting the Engine (Generator)

Select the Fuel Source (Gasoline)

1. Add gasoline to the fuel tank.

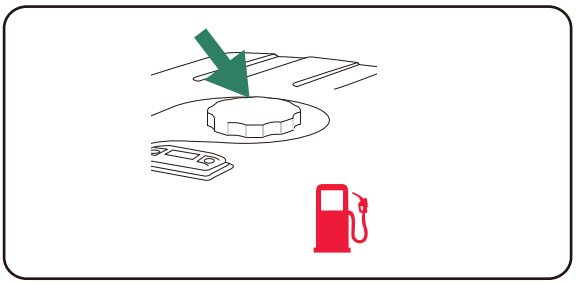

2. Turn the fuel valve to the “ON” position.

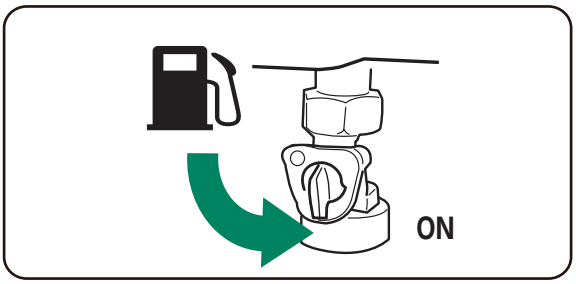

3. Make certain the propane tank is fully closed.

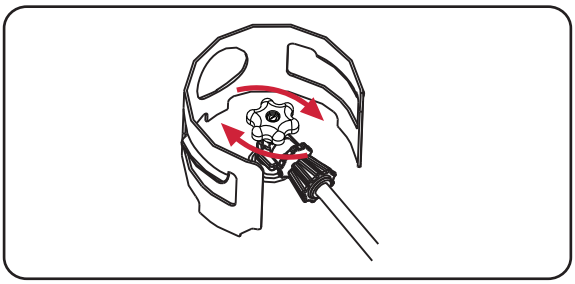

4. Flip the engine switch to the “ON” position.

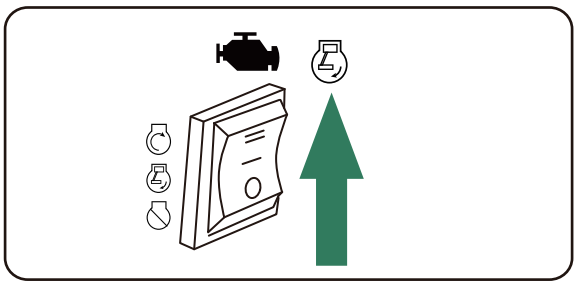

5. Move the choke lever to the “START” position.

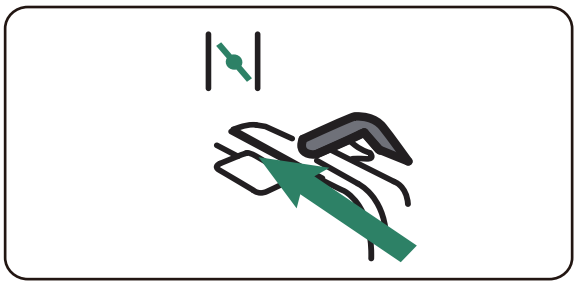

6. Electric Start

   Press and hold switch on the "START" position and release it to "ON" position after few seconds.

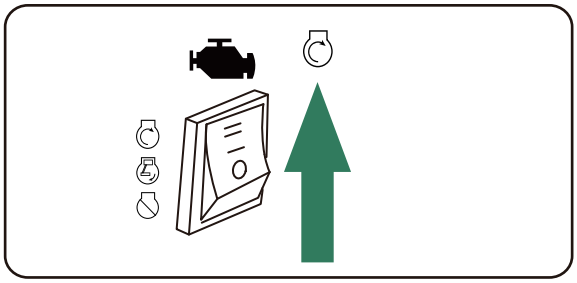

6. Recoil start

   Pull recoil starter slowly until resistance is felt, then pull rapidly.

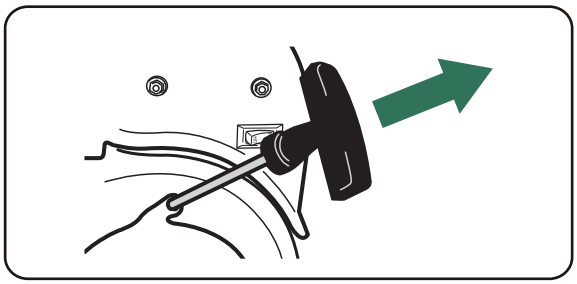

7. Move the chock lever to the “RUN” position.

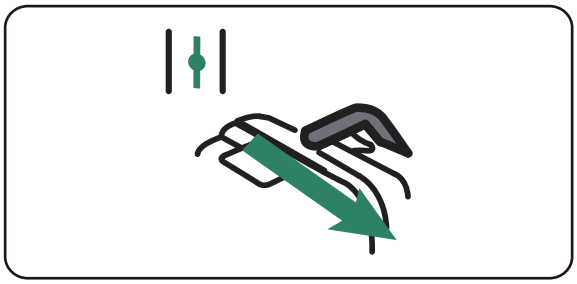

Select the Fuel Source (Propane/LPG)

1. Connect the LPG gas hose to the propane fuel source.

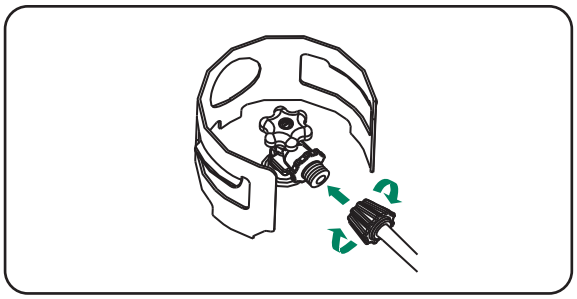

2. Fully open the Propane/LPG cylinder knob.

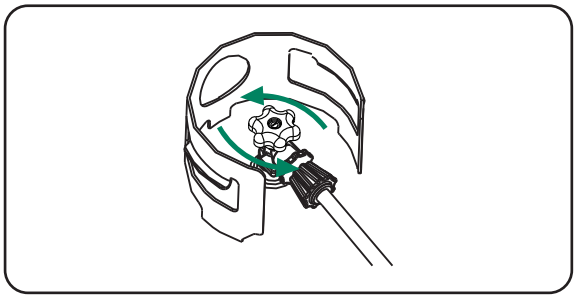

3. Turn the fuel valve to the “ON” position.

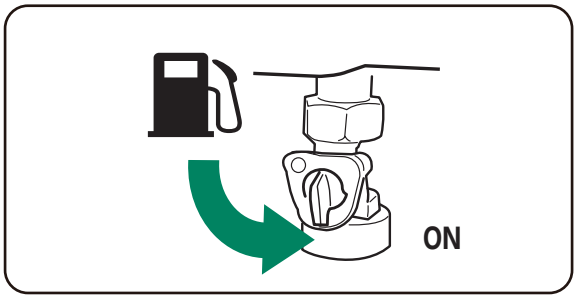

4. Flip the engine switch to the “ON” position.

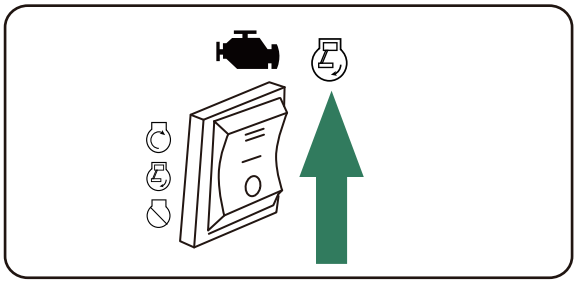

5. Move the choke lever to the “START” position.

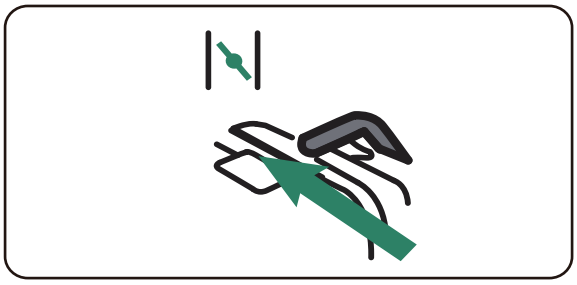

6. Electric Start

Press and hold switch on the "START" position and release it to "ON" position after few seconds.

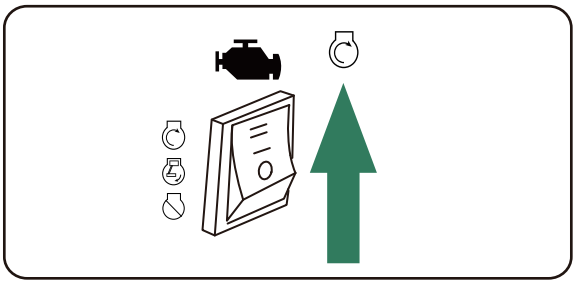

6. Recoil start

Pull recoil starter slowly until resistance is felt, then pull rapidly.

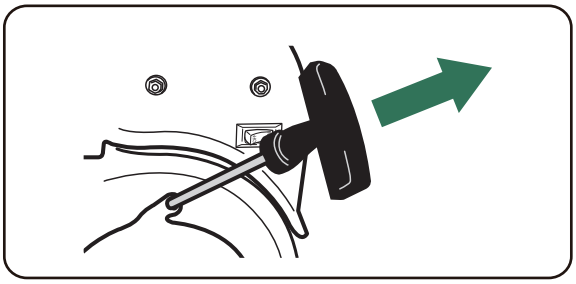

7. Move the chock lever to the “RUN” position.

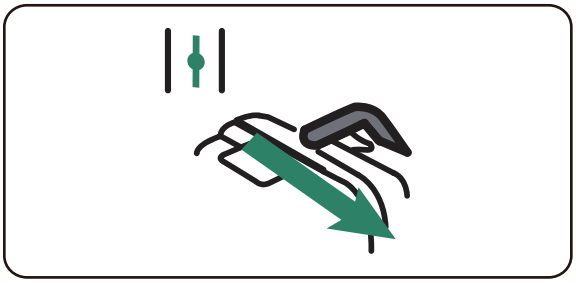

⚠ WARNING



Starter cord kickback (rapid retraction) will pull hand and arm toward engine faster than you can let go which could cause broken bones, fractures, bruises, or sprains resulting in serious injury.

When starting engine, pull cord slowly until resistance is felt and then pull rapidly to avoid kickback.

NOTE:

Keep choke lever in “**START**” position for only 1 pull of the recoil starter. After first pull, move choke lever to the “**RUN**” position for up to the next 3 pulls of the recoil starter. Too much choke leads to spark plug fouling/engine flooding due to the lack of incoming

air. This will cause the engine not to start.
If engine starts after 3 pulls but fails to run. Or if unit shuts down during operation, make sure unit is on a level surface and check for proper oil level in crankcase. This unit may be equipped with a low oil protection device. If so, oil must be at proper level for engine to start.

Connecting Electrical Loads

This unit has been pretested and adjusted to handle its full capacity. Before starting the generator, disconnect all loads. Apply load only after generator is running. Voltage is regulated via the engine speed adjusted at the factory for correct output.
Re-adjusting will void warranty.

NOTE:

When applying a load, do not exceed the maximum wattage rating of the generator when using one or more receptacles. Also, do not exceed the amperage rating of any one receptacle.
Do not apply heavy electrical load during break-in period (the first five hours of operations).

1. Let engine stabilize and warm up for a few minutes after starting.
2. Ensure circuit breaker on control panel is in on position.
3. Plug in and turn on the desired 120 or 240 Volt AC, single phase, 60Hz electrical loads. It is better to attach the item with largest load first.

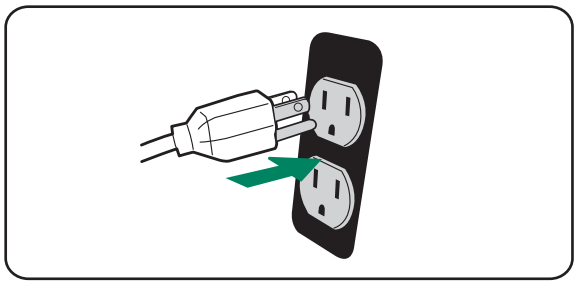

Stopping the Engine (Generator)

1. Turn off and remove entire electrical loads. Never start or stop the generator with electrical devices plugged in or turned on. Let the generator run at no-load for two minutes to stabilize internal temperatures of the engine and generator.

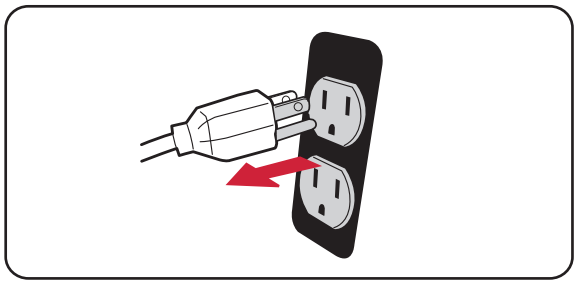

2. Turn off the engine switch to "OFF" position.

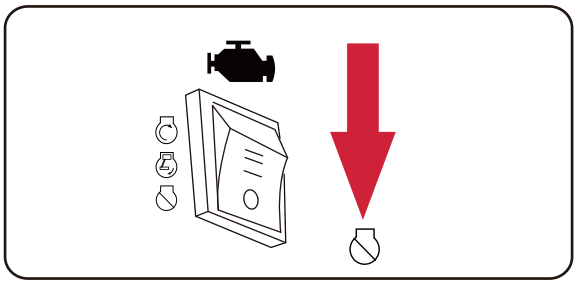

3. Turn the fuel valve to the "OFF" position.

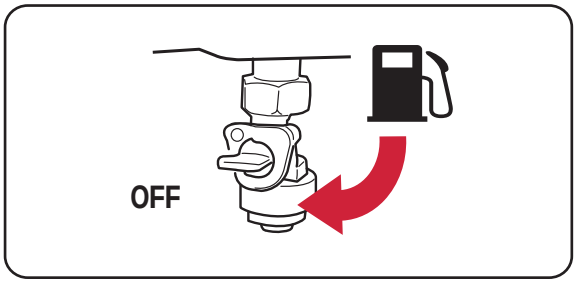

4. Turn the propane/LPG cylinder knob to close position.

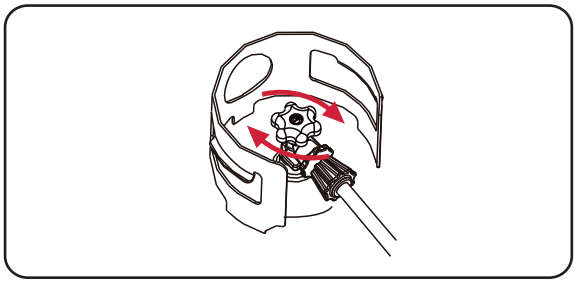

⚠ DANGER



Gasoline, gasoline vapor and propane/LPG are highly flammable and explosive.
Fire or explosion can cause severe burns or death.

NOTE:

DO NOT stop the engine by moving choke control to **"START"** position.
Always ensure that the gasoline valve is on the **"OFF"** position and propane/LPG cylinder fully closed when the engine is not in use. If the engine will not be used for a period of two weeks or longer, please see the Storage section for proper engine and fuel storage.

Low Oil Shutdown

If the engine oil drops below a preset level, an oil switch will stop the engine. Check oil level with dipstick.

If oil level is between LOW and HIGH mark on dipstick:

1. **DO NOT** try to restart the engine.
2. Contact an Authorized Service Dealer.
3. **DO NOT** operate engine until oil level is corrected.

If oil level is below LOW mark on dipstick:

1. Add oil to bring level to HIGH mark.
2. Restart engine and if the engine stops again a low oil condition may still exist. **DO NOT** try to restart the engine.
3. Contact Customer Service.
4. **DO NOT** operate engine until oil level is corrected.

Do Not Overload Generator

Overloading a generator in excess of its rated wattage capacity can result in damage to the generator and to connected electrical devices.

To prolong the life of your generator and attached devices, follow these steps to add electrical load:

1. Start the generator with no electrical load attached.
2. Allow the engine to run for several minutes to stabilize.
3. Plug in and turn on the first item. It is best to attach the item with the largest load first.
4. Allow the engine to stabilize.
5. Plug in and turn on the next item.
6. Allow the engine to stabilize.
7. Repeat steps 5-6 for each additional item.

Changing Fuels

⚠ DANGER



Gasoline, gasoline vapor and propane/LPG are highly flammable and explosive.

Fire or explosion can cause severe burns or death.

⚠ DANGER



DO NOT add gasoline to the gasoline tank or connect the Propane/LPG hose to the generator while the generator is running.

1. Disconnect all electrical loads from the generator.

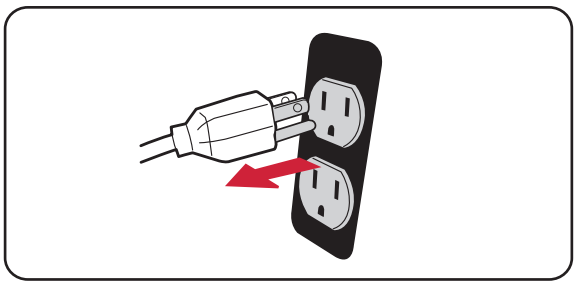

2a. Gasoline to Propane/LPG

2a1. Connect the LPG gas hose to the propane fuel source. Connect the small end of the LPG gas hose to the LPG inlet on generator and then snug with a wrench to prevent leakage.

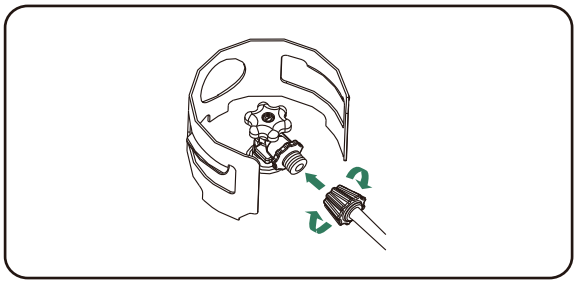

2a2. Fully open the Propane/LPG cylinder knob.

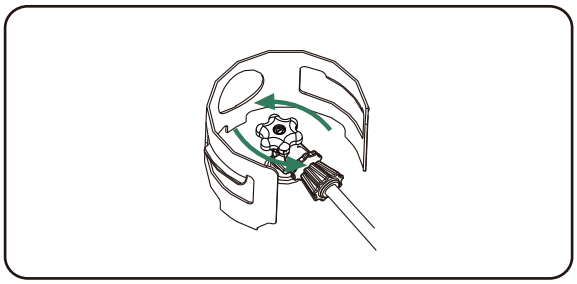

2b. Propane/LPG to Gasoline

- Make certain the cylinder knob is fully closed.

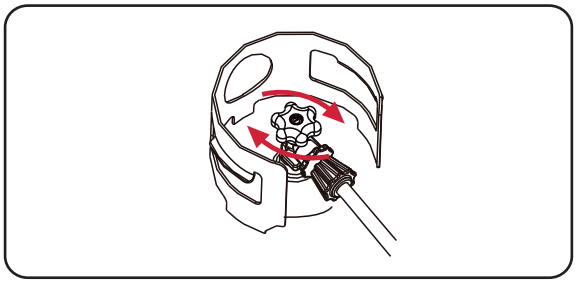

MAINTENANCE AND STORAGE

MAINTENANCE SCHEDULE

Regular Maintenance will improve the performance and extend the life of your generator. Follow maintenance schedule intervals whichever occurs first according to use.

NOTE: Adverse conditions will require more frequent services.

Walk-Around Inspection

Before starting the engine perform a visual inspection of the unit. Look for:

- Proper engine oil level
- Proper fuel level
- Fluid leaks
- Loose clamps and bolts
- Cracked fuel line
- Loose or frayed wiring
- Built up debris
- Propane/LPG connections,regulators and hoses for leaks

Before Each Use
Check engine oil level Walk-around inspection Check damage and leaks for LPG Regulator/Hose Assy.
First 5 Hours (Break-In)
Change engine oil
First 25 Hours or First Month
Change engine oil
Every 100 Hours or 6 Months
Change engine oil Clean Air Filter Inspect/Adjust/Replace Spark plug Inspect/Clean/Replace Spark Arrester
Every 200 Hours or 12 Months
Replace Air filter Replace Spark Plug Inspect/Adjust Valve Clearance*

* To be performed by authorized service center

NOTE:

Change oil every month when operating under heavy load or high temperatures. Clean the air filter more often under dirty or dusty operating conditions. Replace air filter if they cannot be adequately cleaned.

NOTE:

Maintenance should be performed more frequently when generator is used in dusty areas.
When generator has exceeded the maximum figures specified in the table, maintenance should still be cycled according tothe intervals of time or hours stated herein.

General Recommendations

Regular maintenance will improve the performance and extend the life of the generator. See any authorized dealer for service.
The generator's warranty does not cover items that have been subjected to operator abuse or negligence. To receive full value from the warranty, the operator must maintain the generator as instructed in this manual.
Some adjustments will need to be made periodically to properly maintain your generator. All service and adjustments should be made at least once each season. Follow the requirements in the Maintenanc Shedule chart above.

ENGINE MAINTENANCE

To prevent accidental starting, remove and ground spark plug wire before performing any service.

Engine Oil Level Check

⚠ CAUTION

Avoid skin contact with engine oil. Wear protective clothing and equipment. Wash all exposed skin with soap and water.

NOTICE

Always use the specified engine oil. Failure to use the specified engine oil can cause accelerated wear and/or shorten the life of the engine.

When using the generator under extreme, dirty, dusty conditions or in extremely hot weather, change the oil more frequently.
Ambient air temperature will affect engine oil performance. Change the type of engine oil used based on weather conditions.

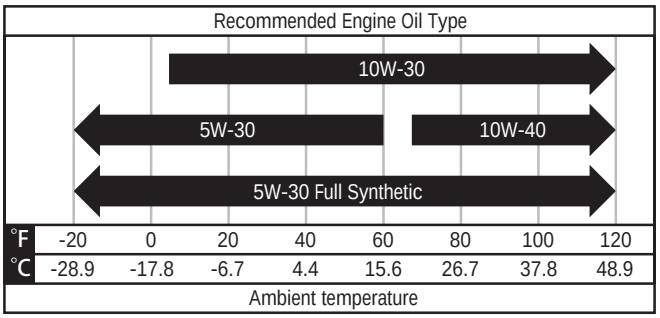

Check the engine oil level before each use or every 8 hours of operation.

1. Place the generator on a level surface and allow the engine to cool for several minutes.
2. With a damp rag, clean around the oil dipstick.
3. Remove the oil dipstick (A).
4. Wipe the dipstick clean, then screw dipstick into filler neck (B). Remove the dipstick and verify that the oil level is within safe operating range.
5. If low, add recommended engine oil incrementally and recheck until the level is between the L and H marks on the dipstick. DO NOT overfill. If over the full mark on the dipstick, drain the oil to reduce the oil level to the full mark.
6. Replace the oil dipstick and hand-tighten.

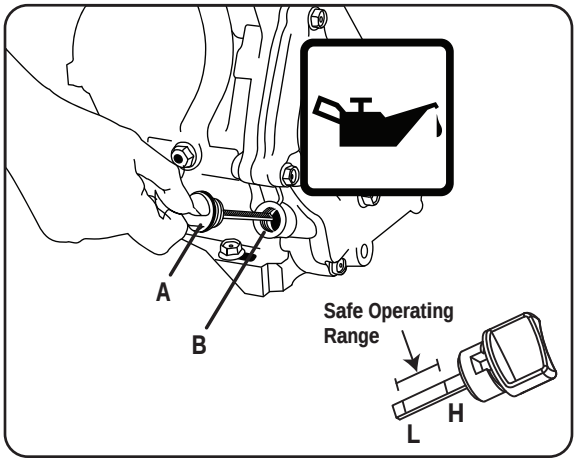

Change Engine Oil

Change engine oil per maintenance schedule.
If you are using your generator under extremely dirty or dusty conditions, or in extremely hot weather, change the oil more often.

⚠ WARNING



Risk of burns. Allow engine to cool before draining oil or coolant. Failure to do so could result in death of serious injury.

⚠ CAUTION

Avoid prolonged or repeated skin contact with used motor oil.

1. Remove the oil cap (A) and wipe dipstick clean.
2. Place a container underneath the oil drain plug to collect used lubricant as it drains.
3. Unscrew the oil drain plug (C) and remove.
4. Allow lubricant to drain completely.

NOTE:

Drain the lubricant while the engine is still warm but not hot. Warm lubricant will drain quickly and more completely.

5. Reinstall the oil drain plug (C) and tighten securely.
6. Fill the engine with oil until it reaches the HIGH(H) level on the oil filler cap.
7. Reinstall the oil cap.

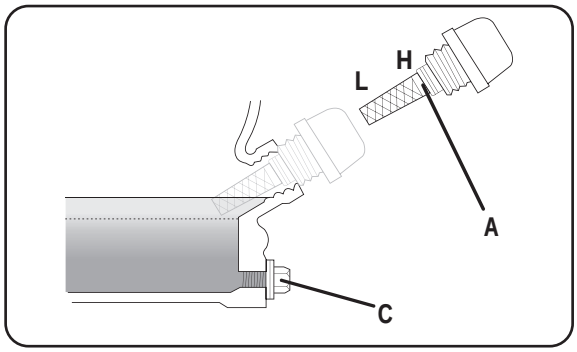

If contaminated or deteriorated oil is used or the quantity of the engine oil is not sufficient, engine damage will result and its life will be greatly shortened.
Maximum oil capacity: 37.2 fl.oz (1.1 L)

Spark Plug Maintenance

The spark plug must be properly gapped and free of deposits in order to ensure proper engine operation.
To check:

1. Remove the spark plug cap (B).
2. Clean any dirt from around base of spark plug.
3. Remove spark plug (A) using provided wrench.
4. Inspect spark plug for damage, and clean with a wire brush before reinstalling. If insulator is cracked or chipped, spark plug should be replaced.
5. Measure plug gap. The correct gap is 0.028-0.031 in. (0.7-0.8 mm). To widen gap, if necessary, carefully bend the ground (top) electrode. To lessen gap, gently tap ground electrode on a hard surface.
6. Seat spark plug in position; thread in by hand to prevent cross-threading.

7. Tighten with wrench to compress washer. If spark plug is new, use 1/2 turn to compress washer appropriate amount. If reusing old spark plug, use 1/8 to 1/4 turn for proper washer compression.
   NOTE:
   An improperly tightened spark plug will become very hot and could damage the engine.
8. Reinstall the spark plug cap (B).

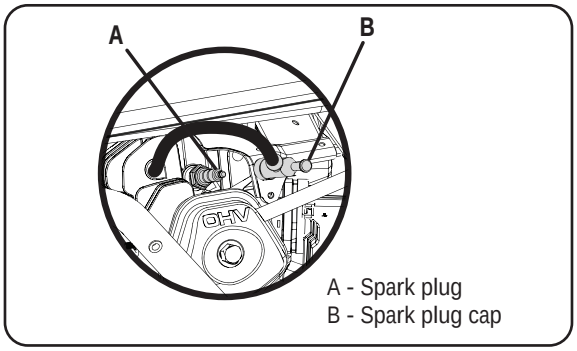

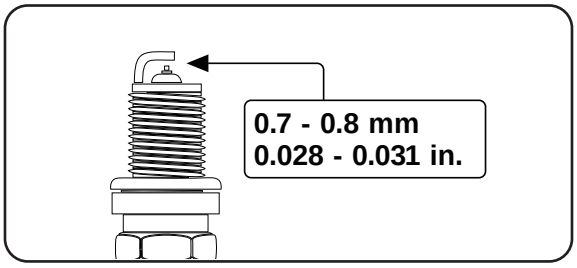

Air Filter Maintenance

For proper performance and long life, keep air filter clean.

1. Turn the knob (A) on the bottom of air the filter cover to release. Remove cover (B) and set aside.
2. Remove the filter element (C).
3. If the filter element is dirty, clean with warm, soapy water. Rinse and let dry.
4. Apply a light coat of engine lubricant to the element, then squeeze it out.
5. Replace the element (C) in the air filter unit(D).
6. Replace the air filter cover (B) and fasten knob (A).

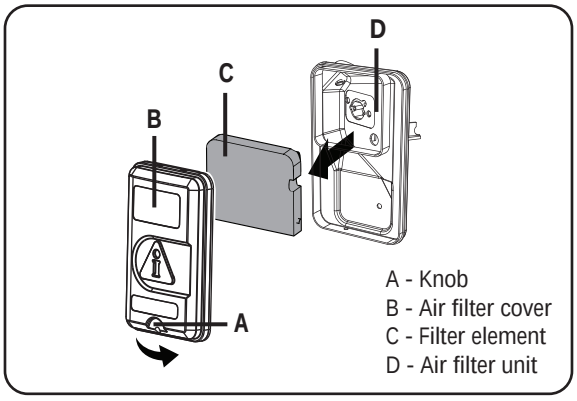

Battery Replacement

⚠ WARNING

Burn hazard. The battery contains sulfuric acid (electrolyte) which is highly corrosive and poisonous. Wear protective clothing and eye protection when working near the battery. Keep children away from the battery.

⚠ CAUTION

Battery posts, terminals contain lead and lead compounds. Wash hands after handling.

1. Disconnect positive cable (A) and negative cable (B) from the battery by removing bolts (M6x12) and nuts (M6) from the negative and positive battery posts.
2. Remove the battery strap(D) from the battery box(C).
3. Replace the battery with new battery.
   Battery specifications: 12V, 9Ah sealed lead acid.
   LxWxH: 5.31*2.99*5.28 inch (135*76*134 mm)
4. Secure the battery to the battery box with a battery strap.
5. Connect the positive cable with red boot first and then connect the negative cable with black boot. Tighten the bolts and nuts and cover them with boots.

NOTICE

Dispose of the used battery properly according to the guidelines established by your local or state government.

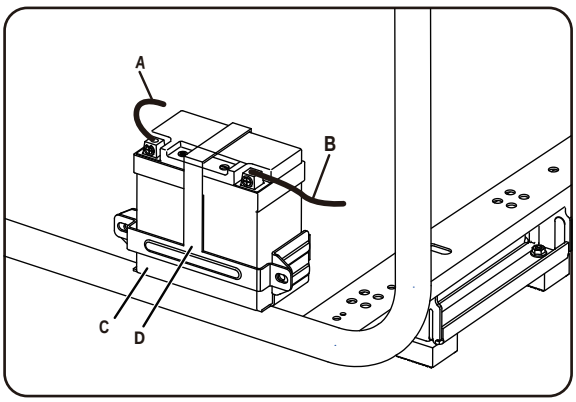

Cleaning the Spark Arrestor

1. Allow the engine to cool completely before servicing the spark arrestor.
2. Loosen the screw (A) to be able to remove clamp (B) and spark arrestor (C).
3. Carefully remove the carbon deposits from the spark arrestor screen with a wire brush.
4. Replace the spark arrestor if it is damaged.
5. Position the spark arrestor on the muffler and attach with the screws removed in step 2.

NOTE:

This product is equipped with a spark arrestor that has been evaluated by the USDA Forest Service; however, product users must comply with Federal, State, and local fire prevention regulations. Check with appropriate authorities. Contact customer service or a qualified service center to purchase a replacement spark arrestor.

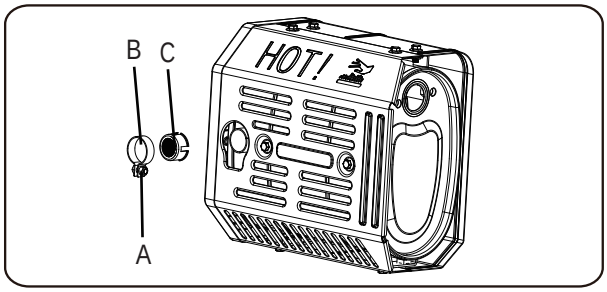

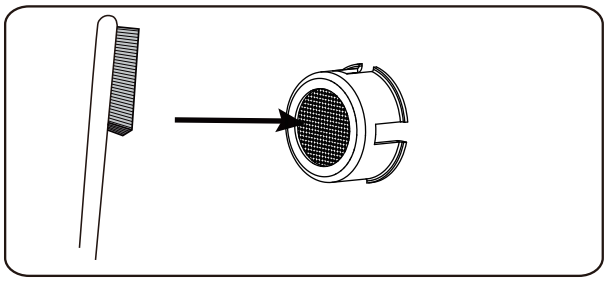

Valve Clearance

Important: Please contact Authorized Service Center for service assistance. Proper valve clearance is essential for prolonging the life of the engine. Check valve clearance per maintenance schedule.

	Intake Valve	Exhaust Valve
Valve Clearance	0.004 ~ 0.006 inch 0.1 ~ 0.15 mm	0.006 ~ 0.008 inch 0.15 ~ 0.2 mm
Torque	10-12 N·M	10-12 N·M

NOTICE

Checking and adjusting valve clearance must be done when the engine is cold.

GENERATOR MAINTENANCE

Make certain that the generator is kept clean and stored properly. Only operate the unit on a flat, level surface in a clean, dry operating environment.
DO NOT expose the unit to extreme conditions, excessive dust, dirt, moisture or corrosive vapours.

NOTE:

DO NOT use a garden hose to clean the generator. Water can enter the generator through the cooling slots and damage the generator windings.
Use a damp cloth to clean exterior surfaces of the generator.
Use a soft bristle brush to remove dirt and oil.
Use an air compressor 25 PSI (172 kPa) to clear dirt and debris from the generator.
Inspect all air vents and cooling slots to ensure that they are clean and unobstructed.

STORAGE

It is recommended to start and run the generator for 30 minutes, every 30 days. If this is not possible, refer to below short term and long term storage.

Short Term Storage

Fill the tank with fresh gasoline and add gasoline stabilizer. Drain the carburetor float bowl.

1 - Add a properly formulated FUEL STABILIZER to the tank if it is not already added.
2 - Run the engine for 10-15 minutes to circulate stabilizer throughout fuel system.
3 - Allow the generator to cool a minimum of 30 minutes and then drain the carburetor float bowl.
4 - Clean the generator and store in a cool, dry and well ventilated area out of direct sunlight.

Long Term Storage (over one year)

For long term storage, the gasoline tank and carburetor must be drained of gasoline.

1 - After engine cools down, remove all gasoline from the fuel tank using non-conductive siphon.
2 - To remove the remaining gasoline in fuel system:
  a-Keep the fuel valve open and run the engine until it stops from lack of fuel.
  Or
  b-Keep the fuel valve open and drain carburetor float bowl.
3 - Change the engine oil.
4 - Remove the spark plug.
5 - Pour tablespoon(5-10cc) of clean engine oil into cylinder.

6 - Pull starter recoil several times to distribute oil in cylinder.
7 - Install spark plug.
8 - Pull recoil slowly until resistance is felt. This close valves so moisture cannot enter engine cylinder. Gently release recoil.
9 - Clean the generator and store in a cool, dry and well ventilated area out of direct sunlight.

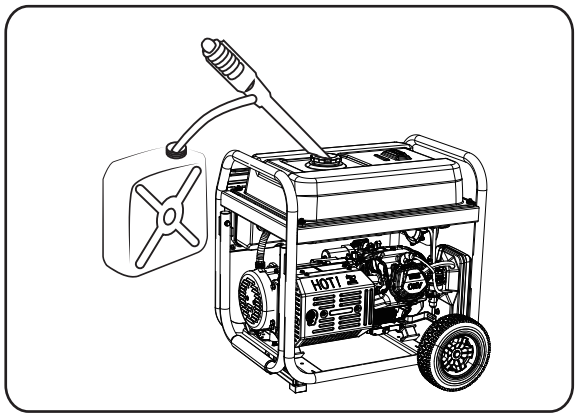

DRAINING THE FLOAT BOWL

1. Turn the fuel tank valve to the OFF position.
2. Locate the drain screw on the bottom of the carburetor float bowl.
3. Place an appropriate gasoline container under the drain screw to catch the drained fuel.
4. Loosen the float bowl drain screw and allow the fuel to drain. Tighten the float bowl drain screw.

⚠ DANGER

Explosion and Fire. Fuel and vapors are extremely flammable and explosive. Store fuel in a well ventilated area. Keep fire and spark away. Failure to do so will result in death or serious injury.

⚠ WARNING

Risk of Fire. Verify machine has properly cooled before installing cover and storing machine. Hot surfaces could result in fire.

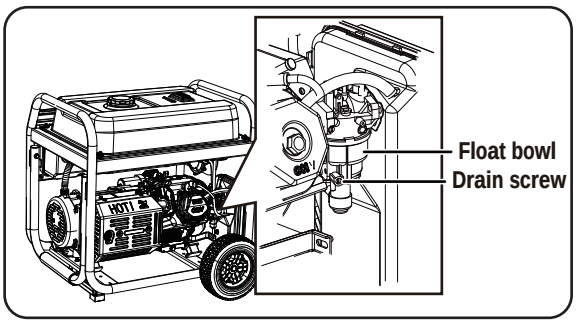

TROUBLE SHOOTING

PROBLEM	POSSIBLE CAUSE	SOLUTION
Engine is running, but no AC output is available.	1. AC Circuit breaker is open. 2. Fault in generator. 3. Poor connection or defective cord set. 4. Connected device is bad. 5. GFCI outlet is open (if equipped)	1. Check AC load and reset circuit breaker. 2. Contact customer service or authorized service center. 3. Check and repair. 4. Connect another device that is in good condition. 5. Correct ground fault and press reset button on GFCI outlet.
Engine runs well at no-load, but "bogs down" when loads is connected.	1. Short circuit in a connected load. 2. Engine speed is too slow. 3. Generator is overloaded. 4. Shorted generator circuit. 5. Clogged or dirty fuel filter. 6. Connected device is bad.	1. Disconnect shorted electrical load. 2. Contact customer service or authorized service center. 3. Reduce load. 4. Contact customer service or authorized service center. 5. Clean or replace fuel filter. 6. Connect another device that is in good condition.
Engine will not start; starts and runs rough or shuts down when running.	1. Fuel source switch is in OFF position 2.Low oil level. 3. Dirty air filter. 4. Out of fuel. 5. Stale fuel. 6. Spark plug wire not connected to spark plug. 7. Bad spark plug. 8. Water in fuel. 9. Flooded. 10. Excessively rich fuel mixture. 11. Intake valve stuck open or closed. 12. Engine has lost compression. 13. Clogged or dirty fuel filter. 14. Clogged or dirty spark arrester screen. 15. Out of propane/LPG. 16. LPG cylinder knob / propane supply valve is not open. 17. Shut off due to CO accumulation & blinking red indicator light 18. Shut off due to a system fault & blinking yellow indicator light	1. Move to gasoline or propane/LPG position. 2. Fill crankcase to proper level or place generator on level surface. 3. Clean or replace air cleaner. 4. Fill fuel tank. 5. Drain fuel tank and carburetor; fill with fresh fuel. 6. Connect wire to spark plug. 7. Replace spark plug. 8. Drain gas tank and carburetor; fill with fresh fuel. 9. Wait 5 minutes and re-crank engine. 10. Contact customer service or authorized service center. 11. Contact customer service or authorized service center. 12. Contact customer service or authorized service center. 13. Replace fuel filter. 14. Clean or replace spark arrester screen. 15. Replace LPG cylinder/ check propane/LPG supply. 16. Fully open LPG cylinder knob / propane/LPG supply 17. Follow all safety instructions on CO Action Label. 18. Contact customer service or authorized service center.
Engine lacks power.	1. Load is too high. 2. Dirty air filter. 3. Clogged or dirty fuel filter. 4. Clogged or dirty spark arrester screen. 5. Engine needs to be serviced. 6. Bad fuel.	1. Reduce load. 2. Replace air filter. 3. Clean or replace fuel filter. 4. Clean or replace spark arrester screen. 5. Contact customer service or authorized service center . 6. Drain gas tank and carburetor; fill with fresh fuel.
Engine“hunts”or falters.	1. Carburetor is running too rich or too lean. 2. Clogged or dirty fuel filter. 3. Choke is opened too soon.	1. Contact customer service or authorized service center . 2. Replace fuel filter. 3. Set choke to halfway position until engine runs smootly.
Engine shuts down when running.	1. Out of fuel. 2. Dirty air cleaner. 3. Low oil level. 4. Out of gasoline or propane/LPG.	1. Fill fuel tank. 2. Clean or replace air cleaner. 3. Fill crankcase to proper level or place generator on level surface. 4. Fill fuel tank with gasoline or replace LPG cylinder/ check propane/LPG supply.

Generator Parts Diagram

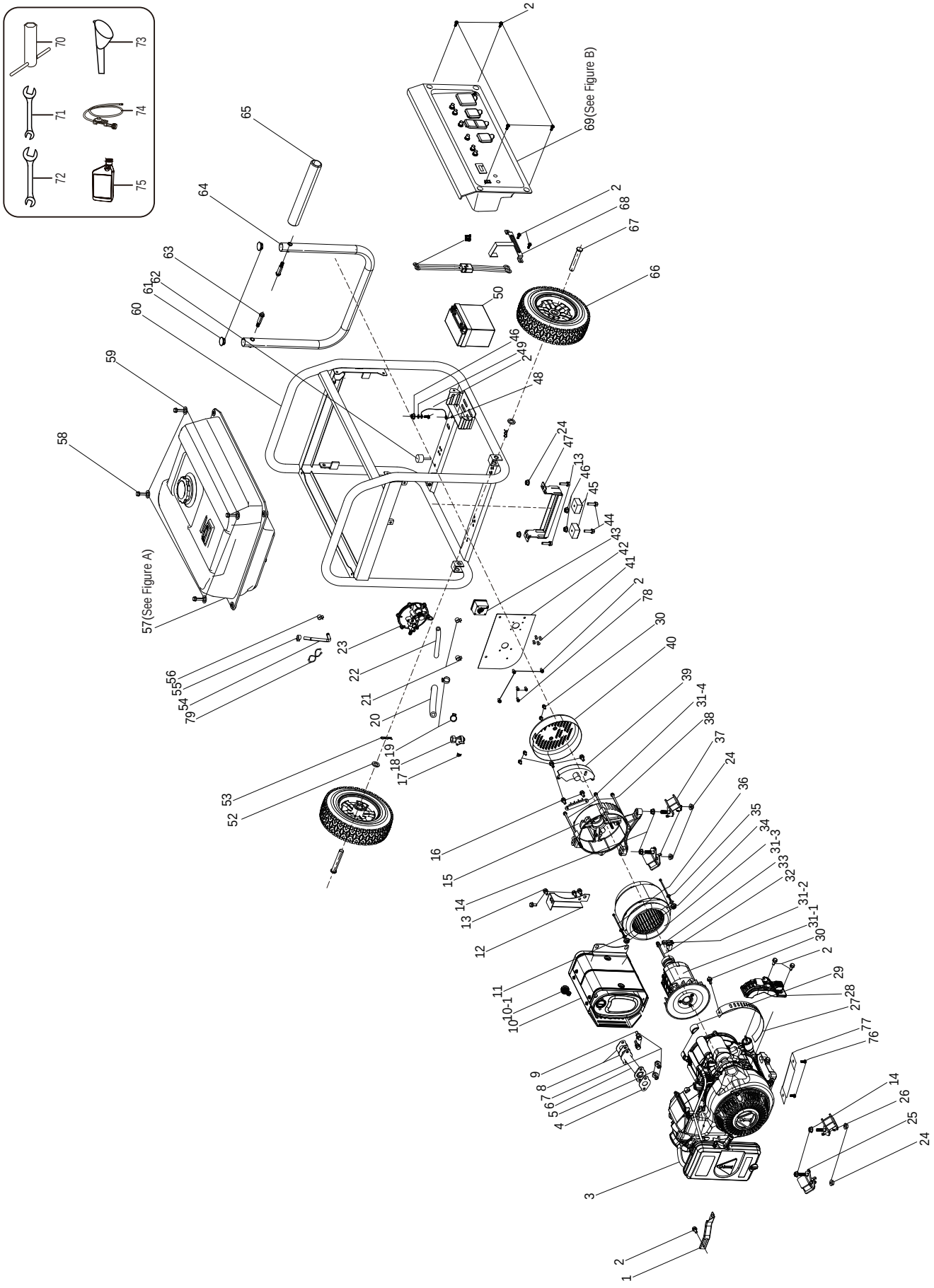

Parts List

	Part Number	Item Description	Qty/Unit
1	33499-00016-00	Air filter bracket	1
2	30101-00339-00	Screw(M6*12)	13
3	20260-12032-00	Engine assembly	1
4	33048-00093-00	Muffler gasket	1
5	30121-00007-00	Nut(M8)	2
6	33339-01142-00	Muffler connecting hose	1
7	30139-00036-00	Spring washer	4
8	33048-00094-00	Muffler gasket	2
9	30101-00361-00	Screw(M8*25)	2
10	20202-01074-00	Muffler assembly	1
10-1	70010-04804-00	Spark arrestor	1
11	30139-00005-00	Spring washer	2
12	33004-00017-00	Mounting bracket	1
13	30101-00355-00	Screw(M8*16)	6
14	30125-00026-00	Nut(M10)	4
15	33085-00058-00	Structure bracket	1
16	30101-00329-00	Screw(M5*16)	6
17	34024-00002-00	Clamp(B8)	1
18	20133-00002-00	Fuel tap	1
19	34024-00060-00	Clamp(12-20)	2
20	34023-00064-00	Gas hose	0.2M
21	34024-00003-00	Clamp(B12)	2
22	34023-00375-00	Gas hose	0.43M
23	20033-00193-00	Secondary pressure reducing valve	1
24	30125-00023-00	Nut(M8)	6
25	34030-00039-00	Shock-absorbing seat(A)	1
26	34030-00044-00	Shock-absorbing seat(B)	1
27	34021-00050-00	Lower windshield cover	1
28	20184-00007-00	Wire cover	1
29	33138-00017-00	Dust-proof rubber	2
30	30101-00326-00	Screw(M5*12)	6
31	20029-22170-00	Alternator assembly	1
31-1	20256-04211-00	Alternator rotor	1
31-2	20183-00017-00	Carbon brush	1
31-3	20046-12039-00	Alternator stator	1
31-4	20107-00024-00	Wiring panel	1
32	30101-00110-00	Screw(M10*285)	1
33	30136-00016-00	Flat washer	1

	Part Number	Item Description	Qty/Unit
34	30128-00008-00	Nut(M5)	2
35	30136-00012-00	Flat washer	2
36	30101-00626-00	Screw(M5*235)	2
37	34030-00040-00	Shock-absorbing	2
38	30101-00090-00	Screw(M6*200)	4
39	20044-00104-00	AVR	1
40	33082-00162-00	End cover	1
41	30112-00032-00	Screw(M4*14)	4
42	33014-04145-00	mounting panel	1
43	20115-00099-00	CO sensor assembly	1
44	30101-00405-00	Screw(M6*20)	2
45	34030-00079-00	Shock-absorbing seat(Rubber)	2
46	30125-00019-00	Nut(M6)	4
47	20014-00117-03	Supporting leg	1
48	20196-00122-00	Wire harness	1
49	33301-00010-00	Spring washer	1
50	31002-00009-00	Battery(12V/9AH)	1
51	20196-02664-00	Wire harness	1
52	30136-00086-00	Flat washer	2
53	34006-00020-00	Clip	2
54	34023-00722-00	Vent hose	1
55	34024-00024-00	Clamp(9.5)	1
56	34024-00031-00	Clamp(10.5)	1
57	/	Fuel tank assembly	1
58	30101-00407-00	Screw(M6*25)	4
59	30136-00074-00	Flat washer	4
60	20090-03064-00	Frame assembly	1
61	33126-00008-00	Plug	2
62	34030-00009-00	Shock-absorbing seat(Rubber)	1
63	33580-00035-00	Handle fixing pin	2
64	20135-00838-00	Handle assembly	1
65	33015-00012-00	Handle rubber sleeve	1
66	20134-00083-04	Wheel(9.5")	2
67	34031-00027-00	Wheel axle	2
68	20217-00260-00	Pressure plate	1
69	/	Control panel assembly	1
70	70003-01784-00	Spark plug wrench	1
71	70003-00909-00	Double open wrench(8mm-10mm)	1

	Part Number	Item Description	Qty/Unit
72	70003-00908-00	Double open wrench(13mm-15mm)	1
73	70003-00917-01	Oil funnel	1
74	20033-00051-00	Propane/LPG hose with regulator	1
75	60005-00036-06	Oil bottle	1
76	30101-00041-00	Screw(M6*10)	2
77	20249-00144-00	Support component	1
78	30101-00671-00	Screw(M5*10)	3
79	34024-00011-00	Clip	1

Fuel tank assembly

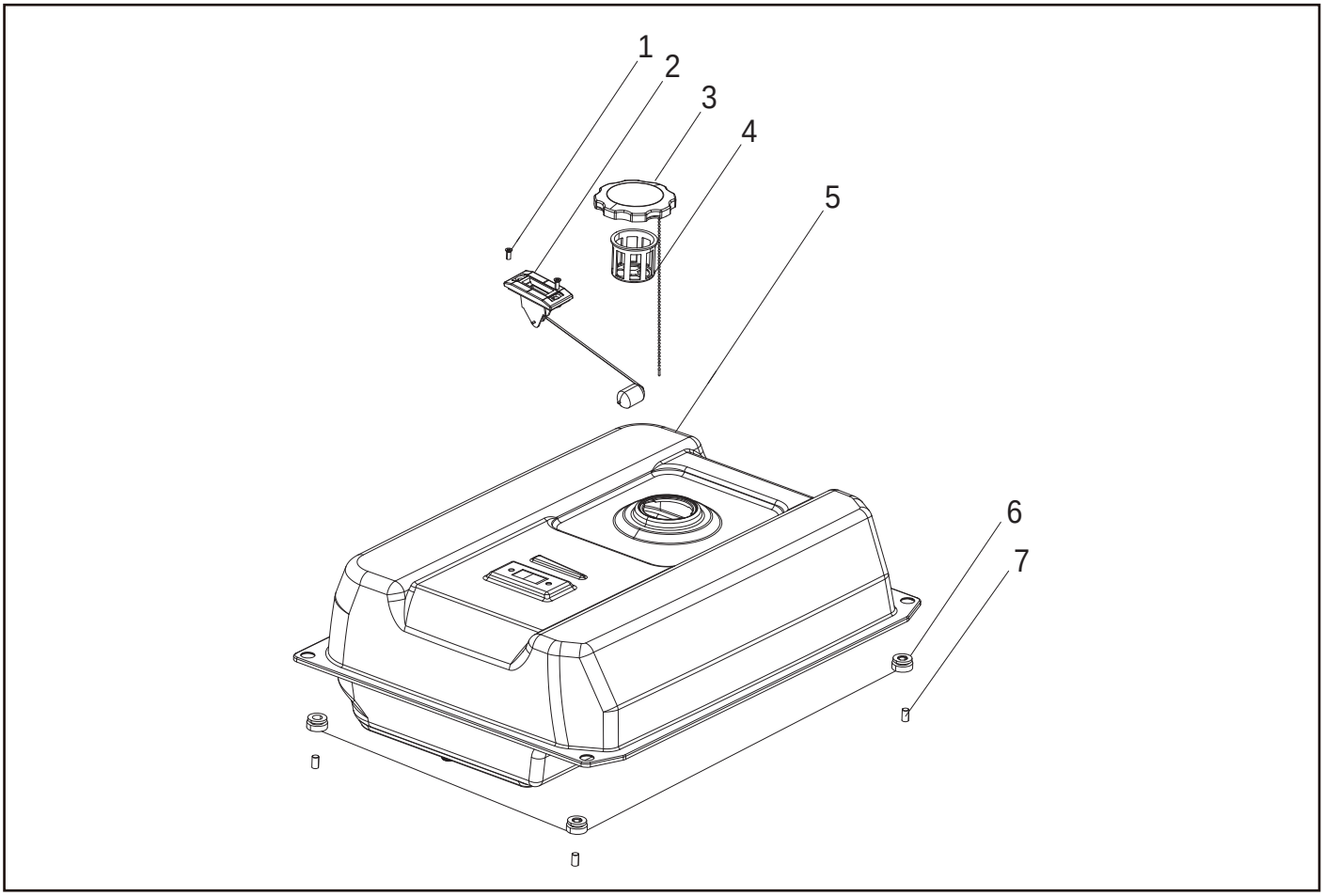

Figure A

Parts List

	Part Number	Item Description	Qty/Unit
1	30116-00053-00	Screw(M5*12)	2
2	70010-03730-00	Fuel guage	1
3	20131-00119-00	Fuel cap assembly	1
4	34037-00033-00	Fuel filter	1
5	20130-00962-01	Fuel tank	1
6	34030-00326-00	Washer	4
7	34032-00025-00	Sleeve	4

Control panel assembly

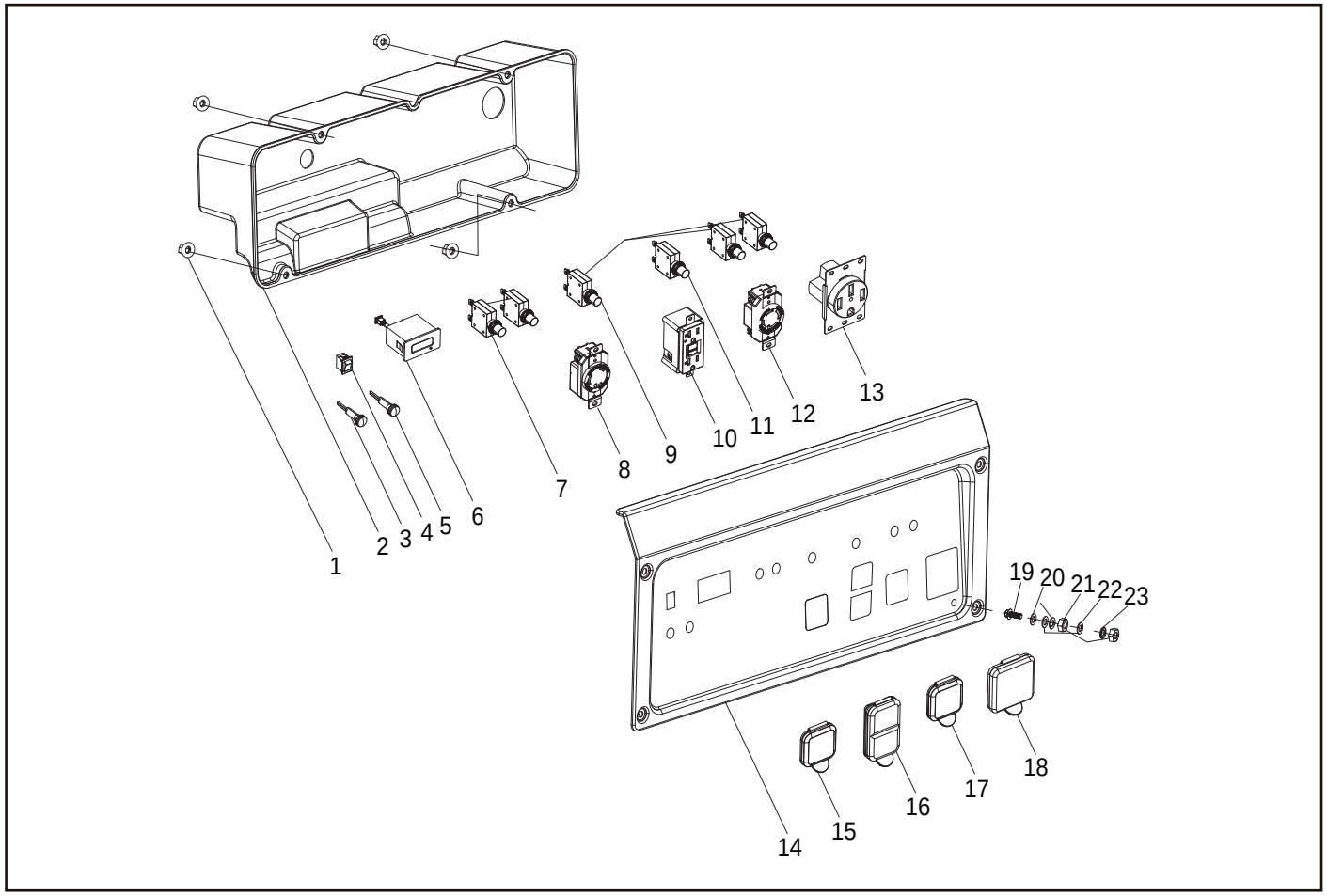

Figure B

Parts List

	Part Number	Item Description	Qty/Unit
1	30125-00051-00	Nut(M6)	4
2	33369-00351-02	Panel seat	1
3	20270-00003-00	Low oil indicator	1
4	31026-00160-02	Starting dial switch	1
5	20270-00015-01	CO WATCH-GUARD indicator	1
6	31008-00048-02	Data center	1
7	31038-00046-00	Circuit breaker(32A)	2
8	31034-00024-03	120V AC 30A outlet(L5-30R)	1
9	31038-00053-00	Circuit breaker(30A)	3
10	31034-00140-00	120V AC/20A duplex GFCI outlet(5-20R)	1
11	31038-00023-00	Circuit breaker(20A)	1
12	31034-00187-00	120/240V AC/30A outlet(L14-30R)	1
13	31034-00085-00	120/240V AC/30A outlet(14-50R)	1
14	33368-03286-01	Panel body	1
15	33141-00096-00	Outlet cover(L5-30R)	1
16	33141-00098-00	Outlet cover(5-20R)	1
17	33141-00099-00	Outlet cover(L14-30R)	1

	Part Number	Item Description	Qty/Unit
18	33141-00106-00	Outlet cover(14-50R)	1
19	30100-00086-00	Screw(M6*20)	1
20	30139-00055-00	Spring washer	2
21	30121-00058-00	Nut(M6)	2
22	30136-00035-00	Flat washer	2
23	33301-00011-05	Spring washer	1

Engine Parts Diagram

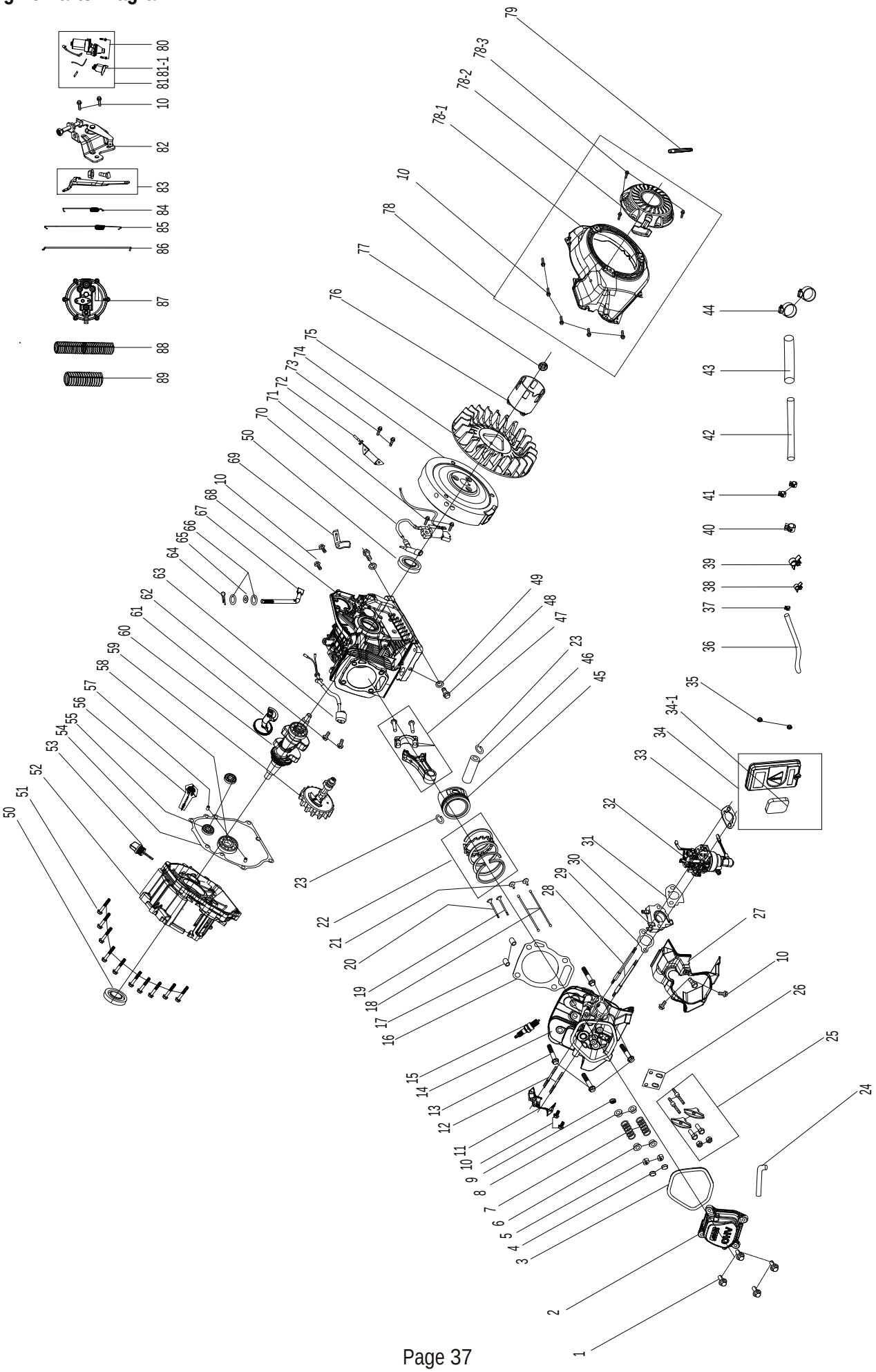

Parts List

	Part Number	Item Description	Qty/Unit
1	30101-00071-00	Screw(M6*20)	4
2	20021-00018-00	Valve cover	1
3	33048-00154-00	Valve cover gasket	1
4	33141-00022-00	Exhaust valve rotor	2
5	34016-00009-00	Valve collet	4
6	34016-00005-00	Valve spring seat	2
7	34015-00023-00	Valve spring	2
8	34016-00008-00	Valve seat	2
9	34007-00001-00	Oil seal	1
10	30101-00070-00	Screw(M6*12)	14
11	34021-00014-00	Blower housing	1
12	30110-00027-00	Exhaust stud(M8*M8*35)	2
13	30101-00289-00	Screw(M10*87)	4
14	20023-00057-02	Cylinder head assembly	1
15	20027-00010-00	Spark plug	1
16	33048-00036-00	Cylinder head gasket	1
17	34006-00007-00	Dowel pin	2
18	34020-00010-00	Push rod	2
19	34013-00078-00	Intake valve	1
20	34013-00034-00	Exhaust valve	1
21	34008-00006-00	Valve tappet	2
22	20084-00011-00	Piston ring set	1
23	30150-00023-00	Piston pin clip	2
24	34023-00074-00	Breather hose	1
25	34019-00075-01	Rocker arm	2
26	34017-00008-00	Push rod guide plate	1
27	34021-00061-02	Blower housing	1
28	30110-00020-00	Intake stud(M6*M8*110)	2
29	33048-00053-00	Intake port gasket	1
30	34012-00014-00	Carburetor spacer	1
31	33048-00078-00	Carburetor gasket	1
32	20024-00828-00	Carburetor	1
33	33048-00047-00	Air cleaner base gasket	1
34	20025-00245-02	Air filter	1
34-1	70002-02087-00	Air filter	1
35	30125-00002-00	Nut(M6)	2
36	34023-00004-00	Fuel hose	0.18M
37	34024-00022-00	Clamp(B8)	1
38	34024-00008-00	Clip	1
39	34024-00009-00	Clip	1
40	34024-00056-00	Clamp(B14)	1
41	34024-00003-00	Clamp(B12)	2
42	34023-00706-00	Propane hose	0.4
43	34023-00064-00	Propane hose	0.2
44	34024-00060-00	Clamp(B9)	2
45	34004-00018-00	Wire press plate	1
46	34006-00015-00	Piston pin	1
47	20008-00009-00	Connecting rod assembly	1
48	30101-00514-00	Screw(M12*16)	2
49	30136-00080-00	Washer	2
50	34007-00012-00	Oil seal	2
51	30101-00370-00	Screw(M8*40)	10
52	33129-00020-00	Closure plate	1
53	20026-00088-00	Oil dipstick assembly	1
54	33048-00066-00	Paper gasket	1
55	30141-00112-00	Ball bearing(6202)	2
56	20013-00029-00	Oil gear	1
57	34006-00001-00	Dowel pin(Φ8*Φ6.4*12)	2
58	30141-00118-00	Ball bearing	1
59	20012-00015-00	Camshaft assembly	1
60	20011-00063-00	Crankshaft assembly	1
61	34033-00008-00	Balance shaft	1
62	30101-00342-00	Screw(M6*16)	2
63	33247-00027-00	Oil level sensor	1
64	34006-00017-00	Lock pin	1
65	34007-00002-00	Oil seal	1
66	30136-00095-00	Washer	2
67	34026-00005-01	Governor shaft	1
68	34011-00070-02	Crankcase	1
69	33593-00007-00	Cable clamping plate	1
70	20028-00174-00	Ignition module	1
71	30101-00408-00	Screw(M6*25)	2
72	20009-00065-00	Charging coil	1
73	30101-00530-00	Screw(M6*30)	2
74	33099-00354-00	Flywheel	1
75	33155-00042-00	Cooling fan	1

	Part Number	Item Description	Qty/Unit
76	34022-00028-00	Start cup	1
77	30125-00064-00	Nut(M16)	1
78	20010-00433-00	Large starter cover	1
78-1	70010-00388-01	Blower housing	1
78-2	20034-00188-00	Recoil starter	1
78-3	30100-00281-01	Screw(M6*8)	3
79	34024-00004-00	Wire clamp	1
80	30101-00461-00	Screw(M8*32)	2
81	20149-00016-00	Start motor component	1
81-1	31019-00010-00	Relay	1
82	20022-00018-00	Governor speed control assembly	1
83	34025-00030-00	Governor lever	1
84	34015-00020-00	Return spring	1
85	34015-00010-00	Governor spring	1
86	34026-00008-00	Governor linkage	1
87	20033-00193-00	Secondary regulator	1
88	40052-00053-00	Corrugated tube	0.3M
89	40052-00019-00	Corrugated tube	0.15M

CIRCUIT DIAGRAM Model: AP10700ED

Grounding system(AC): Neutral Bonded to Frame

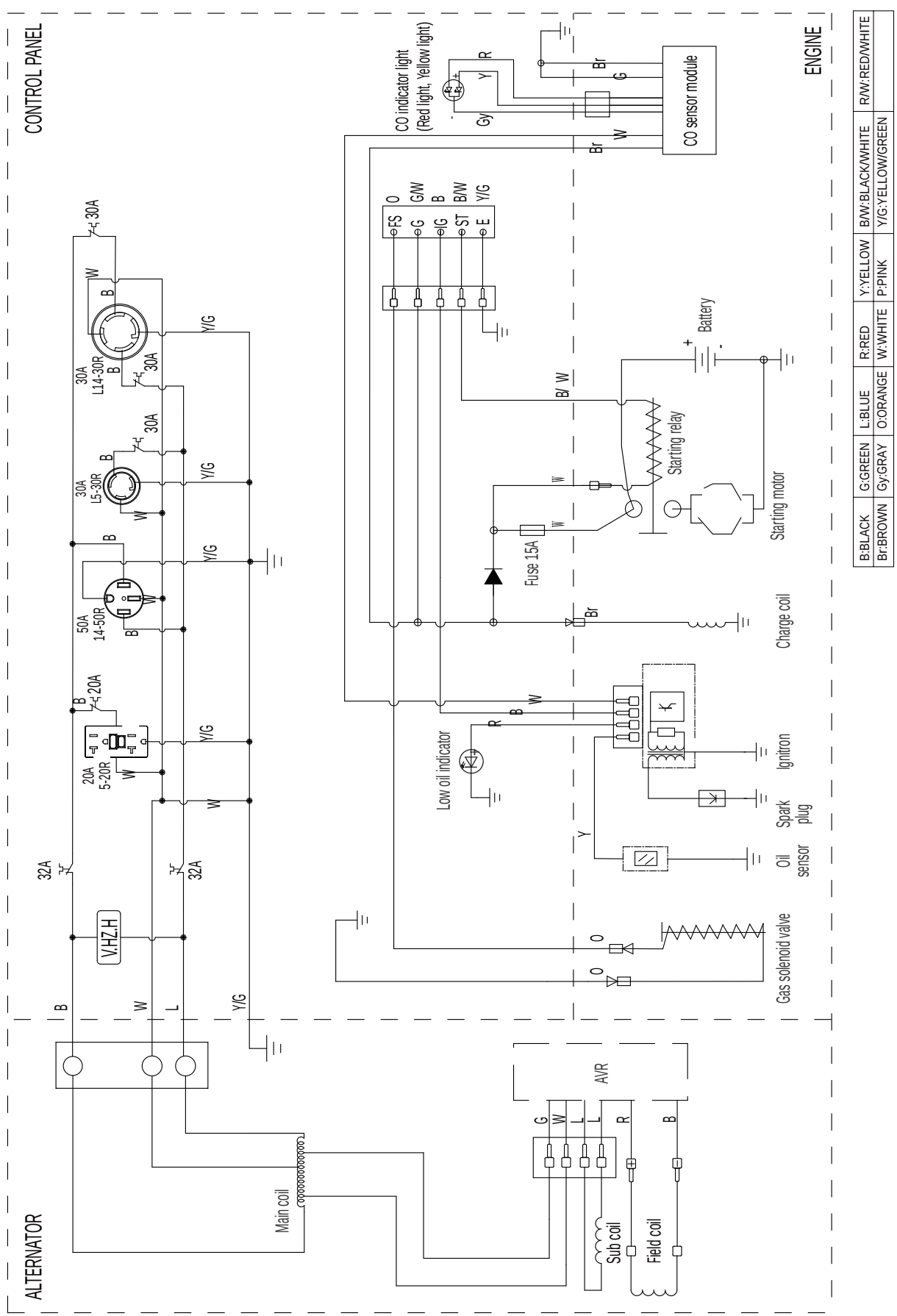

WARRANTY

LIMITED WARRANTY

KEEP YOUR RECEIPT. Proof of purchase will be required to substantiate any warranty claim.
WHAT IS COVERED: A-iPower Corp. warrants to the original retail purchaser in the United States of America, or Canada that this product is free of defects in material and workmanship and agrees, at A-iPower Corp's direction, to either repair, provide replacement parts for, or replace (without charge for parts or labor) any product or component with a material defect for a period of 3 years from the date of purchase, except as limited below. Warranty service and replacement parts are warranted only for the duration of the warranty on the original product. All replaced parts or products become a property of A-iPower Corp.
This product is also covered by an Emissions Control System Warranty which is separate from and in addition to the warranty.

WARRANTY

A-iPower Limited Warranty – 3 Years Residential and 1 Year Commercial.
3 years Residential warranty applies as follow: 1st year Parts & Labor / 2nd & 3rd year Parts ONLY.

Thank you for choosing A-iPower products. To ensure proper registration of your product warranty, please submit your warranty registration along with proof of purchase within 10 days of the date of purchase, this can be done by

a) Completing the Warranty Registration form at the back of this manual and mailing to:
   A-IPOWER CORP
   10887 COMMERCE WAY UNIT A
   FONTANA CA 92337 USA.
b) Visit us at www.a-ipower.com and click the product registration icon.

Warranty Term

A-iPower will provide warranty for any of its products purchased through any authorized AiPower dealer in North America to the original purchaser and will be warranted against defects in material or workmanship for a period of three (3) years for Consumer use from date of purchase, subject to exclusions noted herein. Commercial and Rental applications are warranted for a period of one (1) year from date of purchase.

"Consumer Use" - residential household use by a retail consumer.
"Commercial Use" - all other use - commercial , business, industrial, or rental purpose.

How to Obtain Warranty Service

Please call our Customer Service Dept.
855-888-3598
or e-mail to support@a-ipower.com
Please have necessary information available - Model Number, Serial Number, Proof of Purchase.

DO NOT RETURN THE PRODUCT TO THE PLACE OF PURCHASE

A-iPower Customer Service Dept will assist with all product related questions and will help troubleshoot issues and will send any replacement parts as necessary while product is within the warranty period at no charge. If the issue cannot be resolved then A-iPower Customer Service Dept at its discretion determine and authorize diagnosis and repair through one of its authorized Service Centers. A-iPower Corp at its discretion may choose to provide replace of part, component, or product.
Service or replacement of parts at any unauthorized repair facility without prior authorization will not be covered by this warranty.

Warranty Exclusions

This warranty does not cover the following:
Regular wear and maintenance - this warranty will not cover repair when normal use has exhausted the lifetime of a part(s) or engine.
Installation and Maintenance - this warranty does not cover improper or unauthorized assembly, alteration, modification or any other damage resulting from misuse or neglect.
Normal maintenance parts - this warranty does not cover spark plugs, air filters, adjustments, or other related service due to obstructions and other build ups resulting from improper maintenance.
Additional exclusions - this warranty does not cover wearable parts such as filers, spark plugs, o-rings, batteries etc. It does not cover any cosmetic defects such as scratches to paint, decals etc. It does not cover any damage resulting from use of non-original manufacturer's parts, use of aftermarket parts. It does not cover any failures due to acts of God and

other force majeure events beyond the control of the manufacturer.

Warranty limits and Implications and Consequential Damages

A-iPower is not obligated to cover any loss of time, use of product, freight cost, or any other incidental or consequential claim from the use of this product. This warranty is in Lieu of all other warranties, express or implied.
This warranty gives you specific legal rights which vary from state to state.

MERCHANDISE RETURN GUIDELINES

- All products must be returned in original or equivalent packaging. Improperly packaged returns will not be accepted.
- Must have adequate packing for transportation.
- Federal Law requires that all machines that utilize gasoline, oil, or other flammable liquids must be drained Completely & Thoroughly prior to shipment.
- Gas caps and oil plugs must be left off for 24 hours prior to shipping. Please note: liability for this violation of the law resides with the sender of the shipment.
- Return to address provided in return authorization, using the parcel service required. Units returned without authorization will not be honored.
- Please Note: Refunds will not be granted for items that have been modified or damaged by abuse or usage not in accordance with product instructions.



Fontana, CA 92337 USA
Phone: 855-888-3598
support@a-ipower.com
www.a-ipower.com

A-iPOWER WARRANTY REGISTRATION FORM

Register your product by emailing this form to support@a-ipower.com or register on-line at: www.a-ipower.com.

Registering your product is important , it provides the following protections:

1. You have record of product purchased
2. Customer Service can Better serve you for Warranty related issues
3. We can contact you in the unlikely event should notification is necessary

Customer Information:

Name: _____
Phone: _____
E-mail: _____
Address: _____
City, State: _____
Zip code: _____
Purchase Date: _____

Product Information:

Serial #

Model #

The serial No. can be found on the engine.
PLEASE NOTE: Your product cannot be registered without model & serial numbers.

1.THE PRODUCT WAS PURCHASED FOR: A.❑ Residential cleaning

B. ❑ Other _____

2.THIS PRODUCT IS A: (select one)

A.❑ First time purchase B. ❑ Replacement

3.HOW DID YOU FIRST LEARN OF THIS PRODUCT: (select one)

A. ❑ Radio
B. ❑ Store Display
C. ❑ Contractor
D. ❑ Trade Show
G. ❑ Direct Mail
H. ❑ From Friend/Relative/Neighbor
I. ❑ Internet
J. ❑ Other _____

4. PLEASE RATE THE FOLLOWING:	Completly Satisfied 5	4	3	2	Not at all Satisfied 1
Product Value for Price Paid	❑	❑	❑	❑	❑
Performance	❑	❑	❑	❑	❑
Features	❑	❑	❑	❑	❑
Product Appearance	❑	❑	❑	❑	❑
Warranty	❑	❑	❑	❑	❑
Ease of Maintenance	❑	❑	❑	❑	❑
Noise Level	❑	❑	❑	❑	❑

5 . HOW LIKELY ARE YOU TO RECOMMEND A-iPOWER TO FAMILY OR FRIENDS?

Extremely Likely 5	4	3	2	Not Likely at all 1
❑	❑	❑	❑	❑

Privacy Statement: A-ipower is committed to respecting your privacy and to complying with the regulations regarding the protection of personal data. The survey data we collect is for the purposes of marketing or product support and demographic information about the entire audience registering their products.



Fontana, CA 92337 USA
Phone: 855-888-3598
support@a-ipower.com
www.a-ipower.com