CAREX®

ITEM# B30300 0000

Locking Raised Toilet Seat



⚠ **Please read all instructions before assembly or use.**

Questions, problems or missing parts?
Before returning, contact Compass Health Brands customer service:

800-526-8051 | CAREX.COM

⚠ WARNINGS

INDICATIONS FOR USE:

A raised toilet seat is intended to increase the height of the seating surface and can be used by persons with decreased strength or mobility.

This device is intended for a single user **ONLY.**

CONTRAINDICATIONS:

For safety reasons, people with balance disorders should **NOT** remain without supervision when using this device. User **MUST** be able to maintain even weight distribution while lowering and rising from device and while seated.

This device **MUST NOT** be used by individuals whose feet **DO NOT** touch the floor when seated, as appropriate balance on the device will not be possible.

SAVE THESE INSTRUCTIONS. This sheet MUST accompany the device with each use.

⚠ WARNINGS:

- **DO NOT ATTEMPT TO ADJUST OR OPERATE THE RAISED TOILET SEAT WITHOUT READING ALL INSTRUCTIONS CAREFULLY.**
- Inspect all parts for shipping damages before assembly. If there is shipping damage – **DO NOT USE.** Contact your dealer/carrier for further instructions.
- If you **DO NOT** understand these instructions, contact a healthcare dealer or technical professional before attempting to install or use the device.
- Users that are unable to understand or follow these instructions and warnings or have limited physical capabilities should be supervised or assisted while using the raised toilet seat.
- This raised toilet seat has a weight limit of 300 lbs (136 kg). **ALWAYS** observe the weight limit on the labeling of your raised toilet seat.
- Use the toilet lift only for the purpose for which it was designed. Compass Health Brands is **NOT** responsible in any way for any misuse of the raised toilet seat, or for injuries or damage caused as a result of it.
- Check that all labels are present and legible. Replace if necessary.
- **DO NOT** use this device if your feet cannot make contact with the floor when in a seated position, as this will change the weight distribution and stability of the device, which can result in serious injury.
- Check fit and tightness of the raised toilet seat to the bowl and all bolts and knobs at least weekly to ensure that the raised toilet seat is secure and safe to use. **NEVER** use the raised toilet seat if any looseness in the assembly or fit to the toilet bowl is noticed, as serious injury may result.
- It is recommended that a toilet safety frame or permanently installed wall mount grab bar is used in addition to the raised toilet seat. Discuss your needs with your health care provider.
- It is recommended that metal bolts be used in the installation of the raised toilet seat as plastic bolts wear out quickly which could result in serious injury.
- **DO NOT** use the raised toilet seat if wobbly, unstable, or not level. **ALWAYS** be sure that the seat is secure and stable before using. Failure to comply with all product warnings may result in serious injury.
- This product is **NOT** suitable for use as a grab rail and/or stability aid while transferring to or from the toilet seat.
- **NEVER** use the raised toilet seat on top of an existing toilet seat.
- Sit on and leave seat from front, not from side. Make sure you have your balance before releasing your grasp from the raised toilet seat to stand.
- This product type is designed for use with the most common types of commodes. It will **NOT** fit all commode types. Be sure that the unit has been installed correctly, fits properly and is stable before use. If seat can rock from side to side, **DO NOT USE.**
- **DO NOT** stand, kneel or climb on the raised toilet seat.
- **DO NOT** let children play on or operate the raised toilet seat.
- Be sure that the user's weight is centered on the device during use. **NEVER** lean, reach or twist torso from side to side as injury may occur.
- The arms are for providing minimal balance assistance when getting on and off the seat. **DO NOT** attempt to use the arms to support body weight during transfer, as this may result in failure of the unit and serious injury.

FAILURE TO USE COMMON SENSE AND HEED THE ABOVE WARNINGS FURTHER INCREASES RISK OF SERIOUS INJURY.
USE AT YOUR OWN RISK AND WITH APPROPRIATE AND SERIOUS ATTENTION TO SAFE OPERATION. USE CAUTION.

INSTRUCTIONS FOR USE:

⚠ **WARNING:** This device is **NOT** intended to bear full body weight on the handles.

⚠ **WARNING:** User **MUST** maintain even weight distribution while lowering and rising from device and while seated. Not doing so can result in tipping of the device and falls/serious injuries.

⚠ **WARNING:** If the device is unable to be securely installed (device shifts left to right or up/down lifting from bowl), **DO NOT USE.** Different commode styles may require alternate seating devices.

⚠ **WARNING:** It is recommended that metal bolts be used in the installation of the raised toilet seat as plastic bolts wear out quickly which could result in serious injury.

1 Remove Packaging and Check Parts

- ☐ Remove the raised toilet seat from all packaging including tape, cardboard and plastic.
- ☐ To avoid risk of suffocation to children or animals, dispose of the plastic bags correctly.

- If you **DO NOT** understand the manual, contact your dealer for a complete explanation of the instructions, cautions and warnings. Otherwise injury may result.
- If any parts are missing or damaged, **DO NOT** attempt to use.

	Description	QTY
A	Raised Toilet Seat	1
B	Arm	2

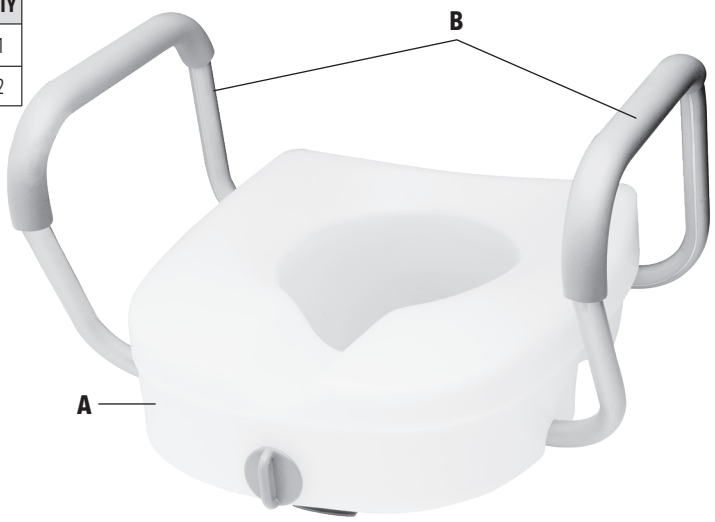

Specifications
Dimensions: 5" (H) x 15.5"- 22" (W) x 17" (D) | Product Weight: 5.6 lbs | Weight Capacity: 300 lbs

2 Install and Adjust Handles

- ☐ To install Handles (B), connect them with the holes on the base of the Raised Toilet Seat (A).
- ☐ You should hear an "audible click" once handles are safely in place.

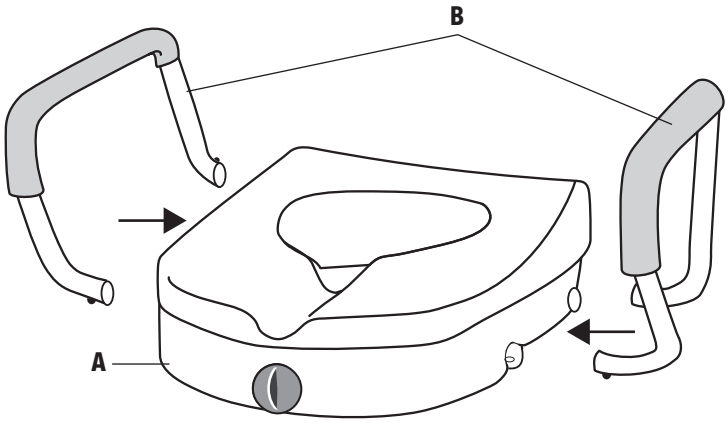

- ☐ The Handles can be adjusted to either be 18" or 20" apart.
- ☐ To adjust, push the D-Tent button and pull the Handles.
  For 18" - the D-Tent button should be in the furthest hole.
  For 20" - the D-Tent button should be in the closest hole.
- ☐ You should hear an "audible click" after adjusting the handles before use.

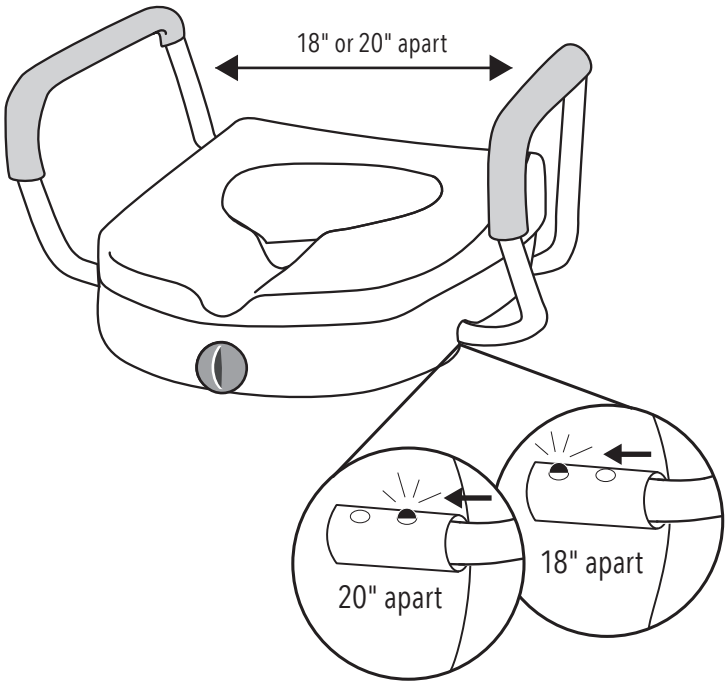

3

☐ Place on top on your toilet seat, ensure it is secure.

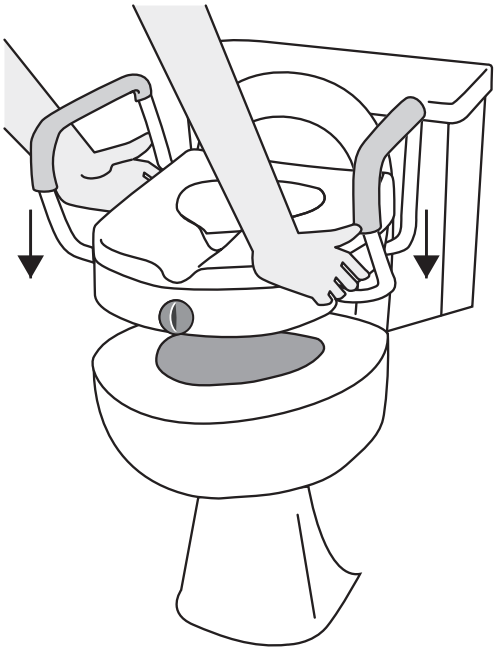

4

☐ Turn locking mechanism to the right, ensuring it is tight and secure.

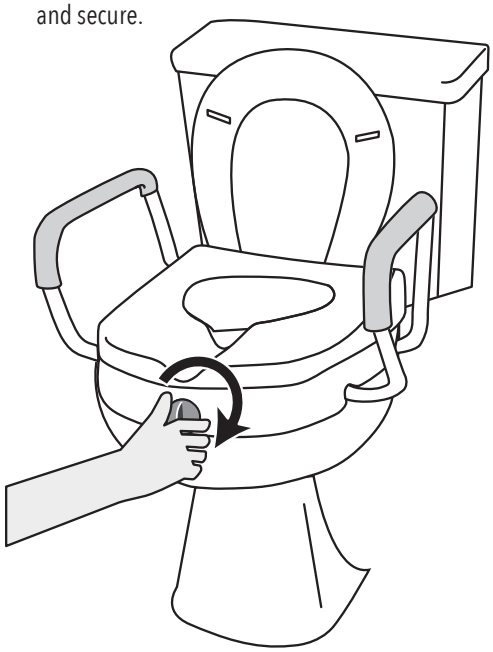

5

☐ Once locking mechanism is turned to the right, the piece on the bottom should be flush against the toilet seat, locking the Raised Toilet Seat into place.

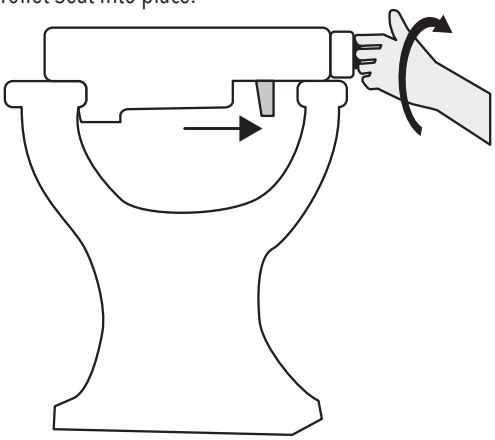

6



7 Cleaning and Maintenance

⚠ **WARNING: The lack of care and maintenance may cause serious injury. Your device should be regularly inspected for signs of damage or wear and tear.**

☐ Check fit and tightness of the raised toilet seat to the bowl and all bolts and knobs at least **WEEKLY** to ensure that the raised toilet seat is secure and safe to use. **NEVER** use the raised toilet seat if any looseness in the assembly or fit to the toilet bowl is noticed, as serious injury may result.

☐ Use damp cloth and mild soap to clean the raised toilet seat. Ensure seat and handles are completely dry before use.

CAREX®

Questions, problems or missing parts?

Before returning, contact Compass Health Brands customer service:

800-526-8051 | CAREX.COM

Retain this manual for future use.

COMPASSHEALTH

Manufactured for:
Compass Health Brands Corp.
6753 Engle Rd.
Middleburg Heights, OH 44130
www.compasshealthbrands.com
800.376.7263 • Made in China
42-FGB30300 0000_01 © 2024