Foreword

Congratulations on choosing a SUBARU vehicle equipped with EyeSight™. EyeSight incorporates the latest driver assistance features available from SUBARU, including such features as Adaptive Cruise Control, a Lead Vehicle Start Alert and a Lane Departure and Lane Sway Warning, all of which are designed to assist the driver in making decisions and increase driver comfort and convenience. Initially, the operation and use of the various EyeSight features may be unfamiliar to you. That is why we urge you to read this manual carefully before using EyeSight. We also recommend that you first take the time to test EyeSight in order to experience its features for yourself so that you can become familiar with their operation.

Please keep in mind that it is the responsibility of drivers to operate their vehicles safely at all times. Drivers should always remain alert and should never become complacent while operating their vehicles because of the presence of EyeSight. EyeSight is never a substitute for active driver involvement and it may not operate optimally under all driving conditions.

This booklet is a supplement to the Owner's Manual for your SUBARU vehicle and contains a detailed description of EyeSight. It should be read in conjunction with your Owner's Manual so that you will gain a thorough understanding of the proper operation of your vehicle.

The information, specifications and illustrations found in this booklet are those in effect at the time of printing. SUBARU CORPORATION reserves the right to change specifications and designs at any time without prior notice and without incurring any obligation to make the same or similar changes on vehicles previously sold.

Please keep this booklet together with your Owner's Manual and leave it in the vehicle at the time of resale. The next owner will need the information it contains.

SUBARU CORPORATION, TOKYO, JAPAN

"SUBARU" and the six-star cluster design are registered trademarks of SUBARU CORPORATION.

© Copyright 2026 SUBARU CORPORATION

EyeSight

About EyeSight 4
Pre-Collision Braking System 30
Adaptive Cruise Control 66
Lane Centering Function 96
Emergency Stop Assist 115
Lane Departure Prevention Function 129
Emergency Lane Keep Assist 139
Pre-Collision Throttle Management 151
Lane Departure Warning 159
Lane Sway Warning 164
Lead Vehicle Start Alert 168
EyeSight Assist Monitor (if equipped) 170
Conventional Cruise Control 173
List of alert/notification sounds 185
EyeSight malfunction and temporary stop 187
Open Source Software information 192
Changing settings 193
Message screen list 198
Troubleshooting 204

About EyeSight

EyeSight is a driving support system that uses a range of functions to assist the driver in making decisions in order to provide for more safe and comfortable driving and to reduce driver fatigue. Making use of images created by the camera, EyeSight detects the vehicle in front, obstacles, traffic lanes and other items. EyeSight also uses radar sensors to detect vehicles close to the rear of your vehicle.

⚠ WARNING

Drivers are responsible for driving safely. Always comply with all traffic rules and regulations regardless of the fact that your vehicle is equipped with EyeSight. Always maintain a safe following distance between your vehicle and the vehicle in front of you, pay attention to your surroundings and driving conditions, and take necessary actions in order to maintain a safe following distance.
Never attempt to drive relying on EyeSight alone.
EyeSight is intended to assist the driver in making decisions in order to reduce the risk of accidents or damage and lessen the burden on the driver.
When an EyeSight warning is activated, pay attention to what is in front of you and to your surroundings, and take necessary actions.
This system is not designed to support driving in poor visibility or in extreme weather conditions, or to protect against careless driving when the driver is not paying complete attention to the road ahead. It also cannot prevent collisions from occurring in all driving conditions.
When an alert/notification, Pre-Collision Braking System, Automatic Emergency Steering or other system activates, the driver should check the area around the vehicle and then take appropriate action.
There are limits to the EyeSight recognition performance and control performance. Be sure to read the instructions for each function before using the system, and always use it properly. Improper use may lead to failure of control performance, which could cause an accident.

Refer to the following pages for each function:

- For Pre-Collision Braking System, refer to page 30.
- For Adaptive Cruise Control, refer to page 66.
- For Lane Centering Function, refer to page 96.
- For Emergency Stop Assist, refer to page 115.
- For Lane Departure Prevention Function, refer to page 129.
- For Emergency Lane Keep Assist, refer to page 139.
- For Pre-Collision Throttle Management, refer to page 151.
- For Lane Departure Warning, refer to page 159.
- For Lane Sway Warning, refer to page 164.
- For Lead Vehicle Start Alert, refer to page 168.
- For Conventional Cruise Control, refer to page 173.

In left-hand drive vehicles, EyeSight is configured for driving on the right-hand side of the road. However, it can be reconfigured by changing the Driving Lane Customize setting for driving on the left-hand side.*

⇒ **Page 193**

If the setting for the traffic lane (driving side of the road) does not match the traffic lane, full EyeSight performance may not be available.

***: Characteristics and settings that are affected by specific differences between right-hand drive and left-hand drive vehicles cannot be changed.**

Continued on next page ⇒

⇒ Continued from previous page

- The system may not operate correctly under the conditions listed below. When these conditions occur, turn off Pre-Collision Braking System. Also, do not use Adaptive Cruise Control, Lane Centering Function, Lane Departure Prevention Function, Emergency Lane Keep Assist or Conventional Cruise Control.
  - The tire pressure is not correct.*1
  - The temporary spare tire is installed.*1
  - Tires that are unevenly worn or tires with uneven wear patterns are installed.*1
  - Tires that are the wrong size are installed.*1
  - A flat tire has been fixed temporarily with a tire repair kit.
  - The suspension has been modified (including a genuine SUBARU suspension that has been modified).
  - An object that obstructs the camera's view is installed on the vehicle.
  - Tire chains are installed.
  - The headlights are dirty or they have snow and ice or dirt on them. (Objects are not correctly illuminated and are difficult to detect.)
  - The optical axes are not aligned correctly. (Objects are not correctly illuminated and are difficult to detect.)
  - The lights including headlights and fog lights have been modified.
  - Vehicle operation has become unstable due to an accident or malfunction.
  - The brake system warning light is illuminated.*2
  - The vehicle is tilted at an extreme angle due to loaded cargo or other factors.
  - The maximum number of occupants is exceeded.
  - The combination meter is not operating properly; such as when the lights do not illuminate, the beeps do not sound, the display is different from when it is normal, etc.*3

- The system will not operate correctly in the following conditions. Do not use Adaptive Cruise Control, Lane Centering Function, Lane Departure Prevention Function, Emergency Lane Keep Assist or Conventional Cruise Control.
  - The wheels are out of balance (e.g., the balance weight is removed or misaligned).*1
  - The wheels are out of alignment.*1
  - A trailer or another vehicle, etc. is being towed.
- The system may not operate properly under the following conditions. Do not use Lane Centering Function, Lane Departure Prevention Function or Emergency Lane Keep Assist.
  - There is an abnormal vibration in the steering wheel or the steering wheel is heavier than usual.
  - The steering wheel has been replaced with parts other than genuine SUBARU parts.

*1: The wheels and tires have functions that are critically important. Be sure to use the correct ones. For details, refer to the vehicle Owner's Manual.

*2: If the brake system warning light does not turn off, immediately pull the vehicle over in a safe place and contact a SUBARU dealer to have the system inspected. For details, refer to the vehicle Owner's Manual.

*3: For details about the combination meter, refer to the vehicle Owner's Manual.

CAUTION

- The characteristics of the camera are similar to those of human eyes. For this reason, conditions that make it difficult for the driver to see in the forward direction have the same effect on the camera. They also make it difficult for the system to detect vehicles, obstacles, and traffic lanes.
- Detection by the EyeSight system is limited to objects that are within the range of the camera's field of view. Also, after an object enters the range of the camera's field of view, it may take some time for the system to detect it as a target obstacle and to warn the driver.

Example of the range of the stereo camera's field of view

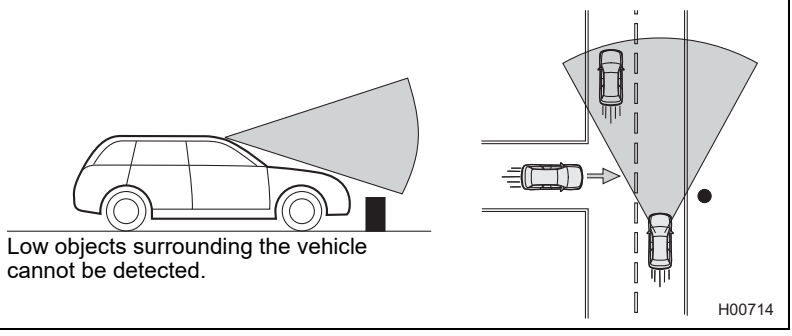

Low objects surrounding the vehicle cannot be detected.

Example of the range of the wide angle mono camera's field of view

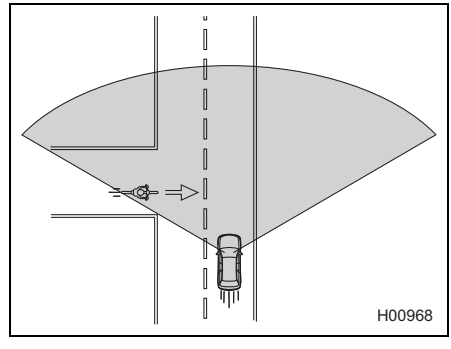

- Under the conditions listed below, it will become more difficult for the system to detect the vehicle in front, motorcycles, cyclists, pedestrians and obstacles on the road, and lane markers. Also, EyeSight may temporarily stop operating. However, the temporary stop will be canceled once these conditions have improved and the vehicle is driven for a short period of time.
  - Bad weather (for example heavy rain, a blizzard or thick fog). In particular, the system is more likely to temporarily stop operating when there is an oil film adhering to the windshield, a glass coating has been applied, or poorly performing wipers are used.
  - Strong light is coming from the front (sunlight or headlight beams of oncoming traffic, etc.).
  - The windshield washer is in use.
  - Raindrops, water drops, or dirt on the windshield are not wiped off sufficiently.
  - The camera's field of view is obstructed by fogging, snow, dirt, frost, dust, scratches, or smears on the windshield, or by light reflecting off the dirt, etc.
  - The vehicle is tilted at an extreme angle due to loaded cargo or other factors.
  - Visibility is poor due to sand, smoke or water vapor blowing in the wind, or the front vision is obscured due to water splashes, snow, dirt or dust stir up generated by the vehicle in front or oncoming traffic.
  - The camera's field of view is obstructed (for example by a canoe on the roof of the vehicle).
  - Through the entrance or exit of a tunnel
  - The rear aspect of the vehicle in front is low, small or irregular (for example a low bed trailer, etc.).
  - The obstacle is a fence, a wall or a shutter, etc. with a uniform pattern (a striped pattern, brick, etc.) or with no pattern in front.
  - The obstacle is a wall or door made of glass or a mirror in front.
  - Driving at night or in a tunnel when there is a vehicle in front that does not have its taillights on
  - Driving through a banner or flag, low branches on a tree or thick/tall vegetation
  - On steep uphill or downhill grades
  - It is completely dark and no objects are detected.
  - The area around the vehicle has a uniform color (such as when completely covered in snow, etc.).
  - Accurate detection is not possible due to reflections in the windshield.

Continued on next page ⇒

⇒ Continued from previous page

- Under the conditions listed below, EyeSight may temporarily stop operating. If this occurs, EyeSight will resume operating when the conditions improve.
  - The inside or outside of the windshield in front of the stereo camera is dirty or fogged.
  - The temperature inside the vehicle is high, such as after the vehicle was left in bright sunshine, or the temperature inside the vehicle is low, such as after the vehicle was left in an extremely cold environment.
  - Immediately after the hybrid system starts
- Under the conditions listed below, it is difficult to recognize vehicles in front, motorcycles, cyclists, pedestrians, obstacles on the road, traffic lanes, etc. Also, the EyeSight system may temporarily stop operating. If the EyeSight system repeatedly stops operating several times, contact a SUBARU dealer and have the system inspected.
  - There is dirt or dust around the camera lenses.
  - The camera has become misaligned due to a strong impact.
  - The vehicle has not been driven for a long time (1 year or more, for example).
- When there is a malfunction in the EyeSight system, turn off Pre-Collision Braking System, Lane Departure Prevention Function and Emergency Lane Keep Assist, and stop using Adaptive Cruise Control, Lane Centering Function and Conventional Cruise Control. Contact a SUBARU dealer and have the system inspected.
  ⇒ Page 193
- When the Vehicle Dynamics Control warning light is illuminated, Pre-Collision Braking System may not operate properly. If the warning light is illuminated, turn off Pre-Collision Braking System. Also, do not use Adaptive Cruise Control or Conventional Cruise Control.

NOTE

- EyeSight records and stores the following data when Pre-Collision Braking System activates, when the “Obstacle Detected” warning activates, when SRS airbags have been deployed, and when the EyeSight system has a malfunction or has temporarily stopped due to poor visibility or a misalignment in the position/angle of the camera. It does not record conversations or other audio data.
  - Stereo camera image data
  - Wide angle mono camera image data
  - Distance from the vehicle in front
  - Vehicle speed
  - Steering wheel turning angle
  - Lateral movement with regards to the direction of travel
  - Accelerator pedal operation status
  - Brake pedal operation status
  - Select lever position
  - Odometer reading
  - Data related to ABS, Vehicle Dynamics Control and Traction Control Function
  - Time of occurrence
- SUBARU and third parties contracted by SUBARU may acquire and use the recorded data for the purpose of vehicle research and development. SUBARU and third parties contracted by SUBARU will not disclose or provide the acquired data to any other third party except under the following conditions.
  - With the consent of the vehicle owner or with the consent of the lessee if the vehicle is leased.
  - The disclosure/provision is based on a court order or other legally enforceable request.
  - Data that has been modified so that the user and vehicle cannot be identified is provided to a research institution for statistical processing or similar purposes.

Handling of the Camera

The stereo camera and wide angle mono camera are located on the windshield.

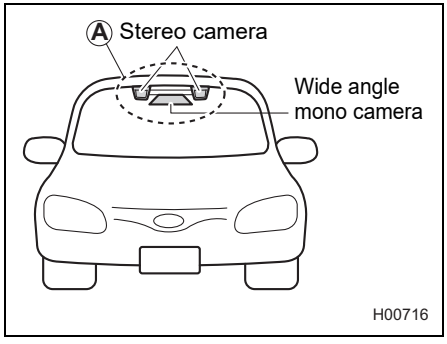

⚠ CAUTION

- The camera monitors and detects smears or blurs on the front of the camera. However, detection is not 100% accurate.
  Under certain conditions, the function may fail to detect smears or blurs on the front of the camera accurately. In addition, this function may not detect that there is snow or ice on the windshield close to the camera. In such conditions, be sure to keep the windshield clean at all times (indicated by Ⓐ). Otherwise the system may not operate correctly. When this function detects that the front of the stereo camera is smeared or blurred, no EyeSight functions can be activated except for Conventional Cruise Control.
- If the area around the camera lenses is dirty, do not try to clean the windshield yourself. Contact a SUBARU dealer to have the vehicle inspected.

- The camera lenses are precision components. Always observe the following precautions especially when handling the area around the camera lenses.
  - Never touch the lenses of the camera. Also, do not try to clean the lenses. If you do accidentally touch the lenses, be sure to contact a SUBARU dealer.
  - When you are cleaning the inside of the windshield around the camera cover, do not spray cleaner directly onto the windshield. Instead, spray cleaner onto a cloth and then wipe the windshield.
  - Do not subject the camera to a strong impact.
  - Do not remove or disassemble the camera.
  - Do not change the positions where the camera is installed or modify any of the surrounding structures.
- If the camera system becomes hot, the cooling fans may start operating. Do not block the ventilation holes in the camera cover. Also, do not insert anything into the ventilation holes. Doing so could damage the camera system.
- Do not touch the camera cover, because it may be hot due to heat generated by the camera system.

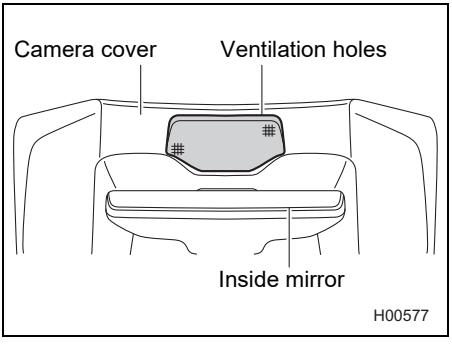

- If the camera cover is hit, pressed strongly or otherwise subjected to impacts, EyeSight functions may not operate correctly.

Continued on next page ⇒

⇒ Continued from previous page

- Do not install any accessories other than the ones designated by SUBARU on the prohibited areas (1) and (2), shown in gray in the illustration below, including the windshield (inside and outside), inside mirror, camera cover and top of the instrument panel.
  - Even if some accessories are installed on the outside of the prohibited areas, abnormal operation of EyeSight may occur due to the reflection of the light or any objects. In this situation, move the accessories. For details, contact a SUBARU dealer.
  - Do not place any stickers or accessories on the windshield (outside or inside). If you have to do so (for example, legally required or electronic toll tag), avoid the prohibited area (1) gray zone shown in the illustration. Otherwise, it may adversely affect the field of view of the camera and can cause improper operation of the system. For details, contact a SUBARU dealer.
  - Do not place any objects in the prohibited area (2) gray zone. The camera may not be able to detect objects accurately and the EyeSight system may not function properly due to reflections in the windshield. For details, contact a SUBARU dealer.
  - Do not polish the top of the instrument panel with chemicals or other substances. The camera may not be able to detect objects accurately and the EyeSight system may not function properly due to reflections in the windshield.

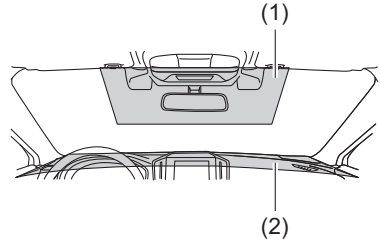

- Do not install any wiper blades other than genuine SUBARU wiper blades. Doing so may affect the camera's field of view and could prevent the EyeSight system from functioning properly.

- Replace damaged wiper blades or worn wiper blade rubbers as soon as possible. Using damaged wiper blades or worn wiper blade rubbers may cause streaking on the windshield. The camera may not be able to detect objects accurately and the EyeSight system may not function properly due to streaks or droplets remaining on the windshield.
- Do not install any accessories on the front side such as on the hood or the grille. It may affect the camera view and the system may not operate correctly.
- Make sure that the cargo loaded on the roof does not interfere in the camera's field of view. Obstructing the camera's view may impair the system operation. For details, contact a SUBARU dealer.

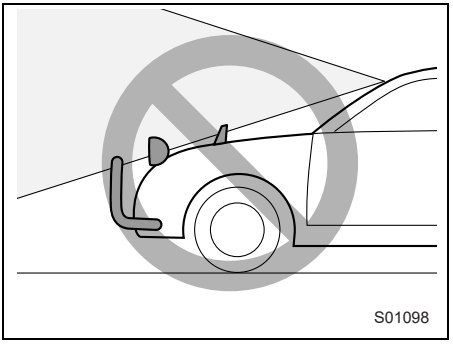

- Keep the windshield (outside and inside) clean at all times. When the windshield has become fogged, or it has a dirt or an oil film on it, the camera may not detect objects accurately and the EyeSight system may not operate correctly. Never mount any device or accessories to the center air vent, as any airflow change may impact EyeSight performance.
- Do not use any glass coating agents or similar substances on the windshield. Doing so may interfere with the proper operation of the system.
- Do not install any film or an additional layer of glass on the windshield. The system may not operate correctly.
- If there are scratches or cracks on the windshield, contact a SUBARU dealer.
- To have the windshield replaced or repaired, contact a SUBARU dealer. Do not install a windshield other than a genuine SUBARU windshield. The camera may not be able to detect objects accurately and the EyeSight system may not operate properly.

Handling of Radar Sensors

For details, refer to the vehicle Owner's Manual.

EyeSight Functions

EyeSight includes the following functions.
EyeSight does not operate when the hybrid system is not running (Hybrid READY indicator light turns off).

■ Pre-Collision Braking System

This function uses a following distance warning feature to warn the driver to take evasive action when there is a possibility of a collision with an obstacle in front (a vehicle, motorcycle, pedestrian, cyclist, etc.). If the driver does not take evasive action, the brakes are applied automatically to help reduce vehicle collision damage or, if possible, help prevent a collision.
⇒ Page 30

Automatic Emergency Steering

This function warns the driver if there is a possibility of a collision with a vehicle, motorcycle, pedestrian or cyclist in front of the vehicle. If the driver does not take evasive action, the system will operate the steering wheel to try to avoid a collision.
⇒ Page 50

■ Advanced Adaptive Cruise Control

Advanced Adaptive Cruise Control is a driving support system that is intended to assist drivers when driving on an expressway (including during congestion and when driving at high speed). Adaptive Cruise Control and Lane Centering Function, which operates linked with Adaptive Cruise Control, are used to assist with driving by automatically controlling the accelerator, brake, and steering.

Adaptive Cruise Control

This function maintains a set vehicle speed that is manually set by the driver. When there is a vehicle in front in the same traffic lane, your vehicle follows the vehicle in front up to the set vehicle speed.
⇒ Page 66

Lane Centering Function

This function helps keep your vehicle close to the center of the lane by detecting lane markings (e.g., white lines) and the lead vehicle on expressways, freeways and interstate highways, and by assisting steering operation. Lane Centering Function activates only when Adaptive Cruise Control is activated.
⇒ Page 96

■ Emergency Stop Assist

While Lane Centering Function is operating, if the system determines that the driver is incapacitated based on steering operation, the Driver Monitoring System (if equipped), etc., it slows down the vehicle and stops it. The hazard warning flashers are used to alert trailing and surrounding vehicles of the emergency situation, and all doors (including the rear gate) are automatically unlocked.
⇒ Page 115

■ Lane Departure Prevention Function

When driving on expressways, freeways, or interstate highways, the system recognizes the lane markings. If the vehicle is likely to depart the lane, the system assists with steering operation in the direction that prevents the lane departure, preventing the vehicle from leaving the lane.
⇒ Page 129

■ Emergency Lane Keep Assist

If the vehicle is likely to depart the lane when there is a following vehicle approaching in the neighboring lane, the system assists the driver to turn the steering wheel in the direction which will prevent lane departure, keeping the vehicle in the lane.
⇒ Page 139

■ Pre-Collision Throttle Management

This function reduces accidental forward movement caused by the select lever being placed in the wrong position or the accelerator pedal being accidentally depressed, or depressed too strongly.
⇒ Page 151

■ Lane Departure Warning

This function warns the driver when the vehicle is likely to drift off the road.
⇒ Page 159

■ Lane Sway Warning

This function warns the driver when the system detects that the vehicle is swaying in the lane, caused by driver fatigue, failure to concentrate on the road, inattention, strong crosswinds or other factors.
⇒ Page 164

■ Lead Vehicle Start Alert

This function notifies the driver when the vehicle stopped in front starts moving but the driver's vehicle remains stationary.
⇒ Page 168

■ Conventional Cruise Control

This function maintains a set vehicle speed that is manually set by the driver. It does not follow the vehicle in front. This function can be used even when the EyeSight system has temporarily stopped operating (⇒ page 189). This function is used by switching from Adaptive Cruise Control to Conventional Cruise Control.
⇒ Page 173

Combination meter

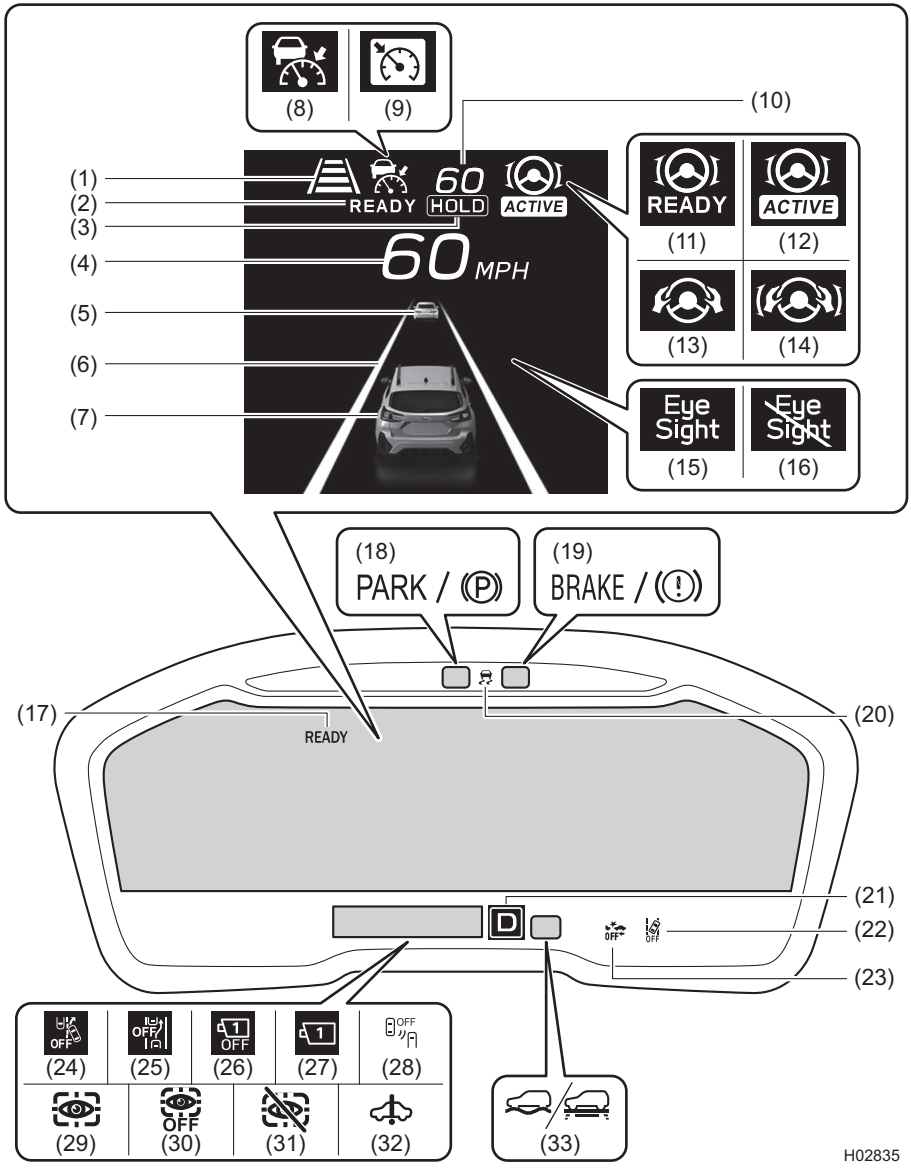

Display units can be changed in the Screen Settings. For details, refer to the vehicle Owner's Manual.

(1)		**Following distance setting indicator** This indicator shows the following distance setting that was set with the / (Following distance setting) switch. ⇒ Page 84
(2)		**READY indicator** This indicator illuminates when cruise control* can be activated. ⇒ Pages 75 and 174 *: Adaptive Cruise Control and Conventional Cruise Control
(3)		**HOLD indicator** This indicator illuminates when the stay-stopped function is operated while Adaptive Cruise Control is on. ⇒ Page 85
(4)	**Current vehicle speed** Displays the vehicle speed.	
(5)		**Lead vehicle indicator** This indicator illuminates when a vehicle in front has been detected while Adaptive Cruise Control is active, or when the stay-stopped function is engaged. ⇒ Page 75
(6)		**Lane indicator** • This indicator illuminates in gray when Lane Departure Prevention Function or Lane Departure Warning is turned on. • Both right and left lines or only one line illuminates in white under the following conditions. - Lane Departure Prevention Function goes into the standby status. - Lane Centering Function is operating by detecting the lane markings. • This indicator illuminates in yellow on the side where Lane Departure Prevention Function activated. • If Emergency Lane Keep Assist activates, the lane indicator on the side that the vehicle is likely to cross will blink in yellow. ⇒ Pages 105, 135 and 147

(7)		**Your vehicle indicator** The brake lights on this indicator illuminate in red according to the actual brake control.
(8)		**Adaptive Cruise Control indicator** • This indicator illuminates when the (CRUISE) switch is pressed. ⇒ Page 75 • When Adaptive Cruise Control is activated, this indicator changes from white to green. When the driver accelerates the vehicle by depressing the accelerator pedal while Adaptive Cruise Control is operating, the indicator changes from green to white. ⇒ Page 75
(9)		**Conventional Cruise Control indicator** • This indicator illuminates when the / (Following distance setting) switch is pressed and held after pressing the (CRUISE) switch. ⇒ Page 174 • When Conventional Cruise Control is activated, this indicator changes from white to green. ⇒ Page 174
(10)	**Set vehicle speed** Displays the set vehicle speed. ⇒ Pages 75 and 174	
(11)	 white	**Lane Centering indicator** • This indicator illuminates when Lane Centering Function is turned on by pressing the (Lane Centering) switch (only when Adaptive Cruise Control is on). • While Lane Centering Function is operating, this indicator changes from white to green. • This indicator turns off when Adaptive Cruise Control is off. ⇒ Page 105 (11) (12): For US models (13) (14): For Canada models
(12)	 green	
(13)	 white	
(14)	 green	

(15)	Eye Sight	**EyeSight warning indicator (yellow)** • This indicator illuminates or blinks when a malfunction occurs in the EyeSight system. • This indicator may illuminate when the remaining fuel or the remaining charge in the high-voltage battery becomes low. • When this indicator is illuminated or blinking, none of the EyeSight functions can be used (including Pre-Collision Braking System and Adaptive Cruise Control, etc.). ⇒ Page 187
(16)	Eye Sight	**EyeSight temporary stop indicator (white)** • When the ignition switch is turned to the ON position, this indicator will illuminate if the (CRUISE) switch is pressed just after the hybrid system starts. It turns off several seconds after the hybrid system starts. • This indicator illuminates when the EyeSight system is temporarily stopped. • When this indicator is illuminated, none of the EyeSight functions can be used except for Conventional Cruise Control. ⇒ Page 189
(17)	READY	**Hybrid READY indicator light** This indicator light illuminates when the hybrid system has started. It turns off when the hybrid system has been turned off. ⇒ Refer to the vehicle Owner's Manual for details.
(18)	PARK / (P)	**Electronic parking brake indicator light** This indicator light illuminates when the electronic parking brake is applied. ⇒ Refer to the vehicle Owner's Manual for details.
(19)	BRAKE / (!)	**Brake system warning light** If the brake system warning light illuminates when the electronic parking brake is released while driving, turn Pre-Collision Braking System off. At this time, do not use cruise control*. If the brake system warning light does not turn off, immediately pull the vehicle over in a safe place. Contact a SUBARU dealer to have the system inspected. ⇒ Refer to the vehicle Owner's Manual for details. *: Adaptive Cruise Control and Conventional Cruise Control

(20)		**Vehicle Dynamics Control warning light/Vehicle Dynamics Control operation indicator light** • This warning light illuminates when the Vehicle Dynamics Control system is probably malfunctioning. • This indicator light blinks during activation of the skid suppression function and during activation of the traction control function. ⇒ Refer to the vehicle Owner's Manual for details.
(21)		**Select lever/gear position indicator** This indicator shows which position the select lever or the gear is in.
(22)		**Lane Departure Warning OFF indicator light** This indicator light illuminates when the ignition switch is turned to the ON position, and then turns off several seconds after the hybrid system starts. ⇒ Pages 163 and 167
(23)		**Pre-Collision Braking System OFF indicator light** • This indicator light illuminates when the ignition switch is turned to the ON position, and then turns off several seconds after the hybrid system starts. • This indicator light illuminates when Pre-Collision Braking System and Pre-Collision Throttle Management are off. ⇒ Pages 63 and 158
(24)		**Emergency Lane Keep Assist OFF indicator** • This indicator illuminates when the ignition switch is turned to the ON position, and then several seconds after the hybrid system starts, it turns off or remains illuminated depending on the current status (ON or OFF). • This indicator illuminates if Emergency Lane Keep Assist is turned off. • This indicator illuminates if BSD/RCTA or Emergency Lane Keep Assist cannot be used due to a malfunction or if BSD/RCTA is turned off. ⇒ Page 139

(25)		**Automatic Emergency Steering OFF indicator** • This indicator illuminates when the ignition switch is turned to the ON position, and then turns off several seconds after the hybrid system starts. • This indicator illuminates if BSD/RCTA or Pre-Collision Braking System is turned off. • This indicator illuminates if Automatic Emergency Steering cannot be used due to a malfunction. ⇒ Page 61
(26)		**Wide angle mono camera OFF indicator** This indicator illuminates when the wide angle mono camera is temporarily stopped. ⇒ Page 64
(27)		**Wide angle mono camera warning indicator** This indicator illuminates when a malfunction occurs in the wide angle mono camera. ⇒ Page 65
(28)		**BSD/RCTA OFF indicator** This indicator illuminates when BSD/RCTA is deactivated. ⇒ Refer to the vehicle Owner's Manual for details.
(29)		**Driver Monitoring System operation indicator light (green) (if equipped)** This indicator light illuminates while Driver Monitoring System operates. ⇒ Refer to the vehicle Owner's Manual for details.
		Driver Monitoring System warning light (yellow) (if equipped) This warning light illuminates when a malfunction occurs in the Driver Monitoring System. ⇒ Refer to the vehicle Owner's Manual for details.
(30)		**Driver Monitoring System OFF indicator light (if equipped)** This indicator light illuminates when Driver Monitoring System is off. ⇒ Refer to the vehicle Owner's Manual for details.

(31)		**Driver Monitoring System temporary stop indicator light (if equipped)** This indicator light illuminates when the Driver Monitoring System is temporarily stopped. ⇒ Refer to the vehicle Owner's Manual for details.
(32)		**Hybrid fail lamp** This fail lamp illuminates when a malfunction occurs in the hybrid system. ⇒ Refer to the vehicle Owner's Manual for details.
(33)		**X-MODE indicator** This indicator illuminates when the X-MODE is on. ⇒ Refer to the vehicle Owner's Manual for details.

Steering wheel

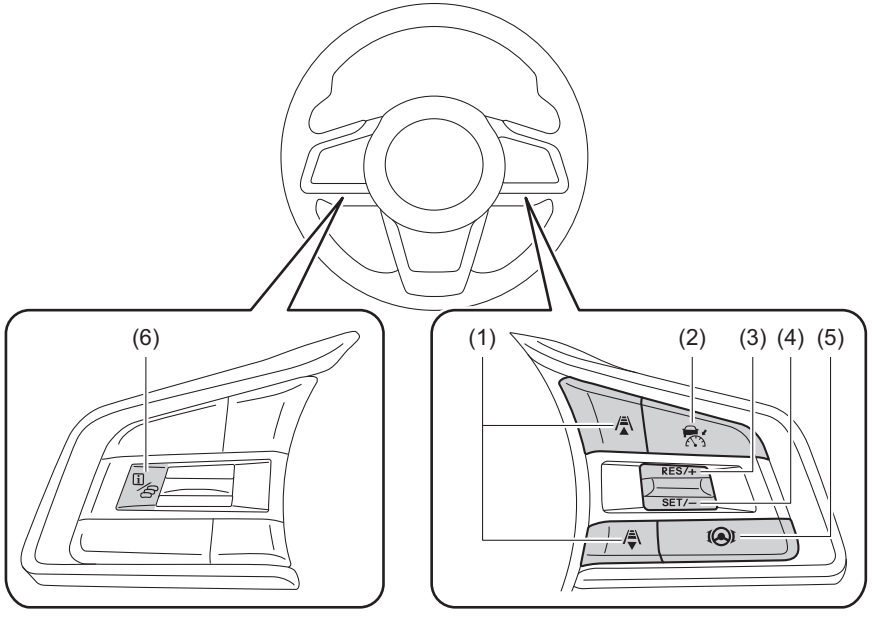

H02130

(1)		**Following distance setting switches** • Press either of these switches to select the set following distance in 4 stages (only when Adaptive Cruise Control is on). ⇒ Page 84 • When the main cruise control is on, switching between Adaptive Cruise Control and Conventional Cruise Control is possible by pressing the / (Following distance setting) switch*. *: To switch to Conventional Cruise Control, press and hold the switch for approximately 2 seconds or longer.
(2)		**CRUISE switch** • Press this switch to turn cruise control* on/off. When (Adaptive Cruise Control indicator) or (Conventional Cruise Control indicator) is shown on the combination meter display, the main cruise control is on. ⇒ Pages 75 and 174 • Press this switch to cancel cruise control*. ⇒ Pages 89 and 180 *: Adaptive Cruise Control and Conventional Cruise Control
(3)	RES/+	**RES/+ switch (RES/SET switch)** • Press this switch to set cruise control*. • After cruise control* is canceled, press this switch to resume cruise control* at the vehicle speed that was previously set. • Press this switch to increase the set vehicle speed (when cruise control* is currently set). ⇒ Pages 75, 81 and 92 (for Adaptive Cruise Control) ⇒ Pages 174, 178 and 183 (for Conventional Cruise Control) *: Adaptive Cruise Control and Conventional Cruise Control
(4)	SET/–	**SET/- switch (RES/SET switch)** • Press this switch to set cruise control*. • Press this switch to reduce the set vehicle speed (when cruise control* is currently set). ⇒ Pages 75 and 82 (for Adaptive Cruise Control) ⇒ Pages 174 and 179 (for Conventional Cruise Control) *: Adaptive Cruise Control and Conventional Cruise Control

(5)		**Lane Centering switch** Press this switch to turn Lane Centering Function on/off (only when Adaptive Cruise Control is on). ⇒ Page 105 • When Lane Centering Function status is standby,  (Lane Centering indicator) (white) illuminates. • When Lane Centering Function status is active,  (Lane Centering indicator) (green) illuminates.
(6)		**i switch** Press this switch to display the message that appeared on the combination meter display again. ⇒ Page 198

Center information display

■ Changing settings

The EyeSight settings can be changed by operating the center information display.
⇒ Page 193

The following systems can also be turned on/off by operating the center information display.

- Vehicle Dynamics Control
- X-MODE
- BSD/RCTA

⇒ Refer to the vehicle Owner's Manual for details.

■ Warning screens

The following warning screens will be displayed on the center information display.

Displayed screen	Item
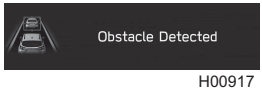 H00917	Pre-Collision Braking System warning (first braking and secondary braking)
	Automatic Emergency Steering warning
	"Obstacle Detected" warning
 S03540	Lane Centering Function warning (no-operation of the steering wheel) (models without Driver Monitoring System)
 H01552	Lane Centering Function warning (no-operation of the steering wheel) (models with Driver Monitoring System)
 S03541	Lane Centering Function cancellation (no-operation of the steering wheel)

Pre-Collision Braking System

When there is a risk of a collision with an identified object in front (a vehicle, motorcycle, pedestrian, cyclist, etc.), the EyeSight system helps to prevent or minimize a collision by warning the driver. If the driver still does not take evasive action to avoid a collision, the brakes can be automatically applied just before the collision in order to reduce impact damage, or if possible, prevent the collision. If the driver takes evasive action to avoid a collision, Pre-Collision Braking Assist will operate in order to help the driver to prevent or minimize the collision.

This system can be effective with direct rear-end collisions. In addition to rear-end collisions, this system can be effective for avoiding collisions with crossing pedestrians and cyclists. This system is also effective for avoiding collisions with oncoming vehicles, oncoming motorcycles, pedestrians and oncoming cyclists when you make a turn.

This function can be activated when the select lever is in the “D”, “M” or “N” position.

About identified objects for Pre-Collision Braking System

EyeSight recognizes the following objects as identified objects for Pre-Collision Braking System. (Identified objects differ depending on the function.)

- Vehicles
- Motorcycles
- Pedestrians
- Cyclists

⚠ WARNING

Pre-Collision Braking System operation

- Never use Pre-Collision Braking System and Pre-Collision Braking Assist to stop your car or avoid a collision under ordinary conditions. These functions cannot prevent collisions under all conditions. If the driver relies only on Pre-Collision Braking System for Brake operation, collisions may occur.
- When a warning is activated, pay attention to the front of the vehicle and its surroundings, and operate the brake pedal and/or take other actions if necessary.
- The Pre-Collision Braking System recognizes vehicles, motorcycles, pedestrians and cyclists as identified objects. The system is intended to avoid or reduce the severity of collisions, but the system may not be able to recognize objects under certain conditions*. For example, when a vehicle is viewed from the side, oncoming vehicle, vehicles approaching in reverse, small animals or children, or walls or doors are not likely to be detected.

- Pre-Collision Braking System will operate at the point when it determines that a collision cannot be avoided and is designed to apply strong braking force just before a collision. The result of this varies depending on a variety of conditions*. Because of this, performance of this function will not always be the same.
- When Pre-Collision Braking System is activated, it will continue to operate even if the accelerator pedal is partially depressed. However, it will be canceled if the accelerator pedal is suddenly or fully depressed.
- If the driver depresses the brake pedal or turns the steering wheel, the system may determine that this constitutes evasive action by the driver, and the automatic braking control may not activate in order to allow the driver full control.
- If the speed difference with the identified object is greater than approximately 37 mph (60 km/h), collisions cannot be avoided due to performance limitations of EyeSight. However, even if the speed difference is approximately 37 mph (60 km/h) or less, if the identified object suddenly cuts in front of you or is outside the camera's field of view, your vehicle may not stop or the system may not activate depending on various conditions* such as visibility or the slipperiness of the road. Similarly, Pre-Collision Braking Assist may not activate depending on various conditions*.

*: Conditions

- Distance to the identified object, speed difference, proximity conditions, lateral displacement (the amount of offset)
- Vehicle conditions (amount of load, number of occupants, etc.)
- Road conditions (grade, slipperiness, shape, bumps, etc.)
- Visibility ahead is poor (rain, snow, fog or smoke, etc.).
- The detected object is something other than an identified object.
  - A domestic animal or other animal (a dog or deer, etc.)
  - A guardrail, telephone pole, tree, fence or wall, etc.
- Even if the object is an identifiable object, depending on the brightness of the surroundings, its relative movement, its aspect, and the direction it is facing, there may be cases when the system cannot detect it as an identified object.
- The system determines that operation by the driver (based on accelerator pedal operation, braking, steering wheel angle, etc.) is intended as evasive action.

Continued on next page ⇒

⇒ Continued from previous page

- Vehicle maintenance status (brake systems, tire wear, tire pressure, whether a temporary spare tire is being used, etc.)
- A trailer or another vehicle, etc. is being towed.
- The brakes are cold due to the outside temperature being low or just after starting the hybrid system.
- The brakes are overheated on downhill grades (braking performance is reduced).
- In rain or after washing the vehicle (the brakes are wet and braking performance is reduced.)
- Recognition conditions of the camera
  In particular, the function may be unable to stop the vehicle or may not activate in the following cases.
  - The identified object moves outside the camera's field of view.
  - Bad weather (for example heavy rain, a blizzard or thick fog)
  - Visibility is poor due to sand, smoke or water vapor blowing in the wind, or the front vision is obscured due to water splashes, snow, dirt or dust stir up generated by the vehicle in front or oncoming traffic.
  - At night or in a tunnel without the headlights on
  - At night or in a tunnel when there is a vehicle in front that does not have its taillights on
  - Approaching a pedestrian or cyclist at night
  - An identified object is outside the area illuminated by the headlights.
  - Strong light is coming from the front (for example, sunlight at dawn, sunset or headlight beams, etc.).
  - The camera's field of view is obstructed by fogging, snow, dirt, frost, dust, scratches, or smears on the windshield, or by light reflecting off the dirt, etc.
  - Fluid has not been fully wiped off the windshield during or after washer use.

- The target cannot be correctly recognized because the camera's view is obstructed by water droplets from rain or the window washer, or by the wiper blades.
- The camera's field of view is obstructed (for example by a canoe on the roof of the vehicle).
- The vehicle is tilted at an extreme angle due to loaded cargo or other factors.
- It is pitch black and there are no objects in the surrounding area.
- The surrounding area is mostly the same color (for example in a snowy location).
- The rear aspect of the vehicle in front is low, small or irregular (the system may recognize another part of the vehicle as its rear and will determine operation from that).
  - There is an empty truck or trailer with no rear and/or side panels on the cargo bed.
  - Vehicles that have cargo protruding from their back ends
  - Non-standard shaped vehicles (vehicle transporters or vehicles with a sidecar fitted, etc.)
  - The height of the vehicle is low, etc.

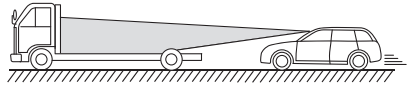

S02133

Continued on next page ⇒

⇒ Continued from previous page

- There is a wall, etc. in front of a stopped vehicle.
- There is another object near the vehicle.
- A vehicle, etc. has its side facing you.
- With vehicles that are backing up or with oncoming vehicles, etc.
- The size and height of an obstacle is smaller than the limitations of the camera's recognition capability.
  - With small animals or children, etc.
  - With pedestrians who are sitting or lying down
- The detected object is a fence or wall, etc. with a uniform pattern (a striped pattern or brick pattern, etc.).
- There is a wall or door made of glass or a mirror in front.
- The vehicle in front suddenly swerves, accelerates, or decelerates.
- An identified object suddenly cuts in from the side or suddenly runs in front of you.

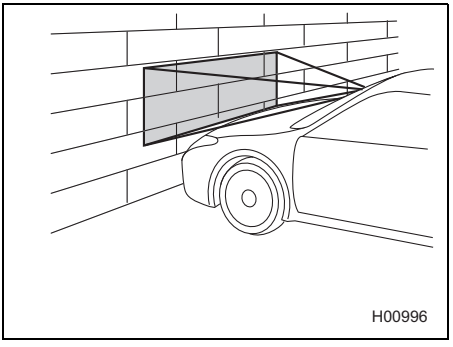

- Your vehicle is immediately behind an obstacle after changing lanes.
- There is an identified object in a location close to your vehicle's bumper.
- The speed difference between your vehicle and an obstacle is approximately 4 mph (5 km/h) or less (As braking is performed once the obstacle is in close proximity to your vehicle, depending on the shape and size of the obstacle, there may be some cases when the obstacle is outside the range of the camera's field of view.).
- On sharp curves, steep uphill grades or steep downhill grades
- On a bumpy or unpaved road
- The brightness changes such as at a tunnel entrance or exit or when you drive under an overpass.

- Do not test Pre-Collision Braking System on its own. It may operate improperly and cause an accident.

- The system may not operate correctly under the conditions listed below. When these conditions occur, turn off Pre-Collision Braking System.
  ⇒ Page 62
  - The tire pressure is not correct.*1
  - The temporary spare tire is installed.*1
  - Tires that are unevenly worn or tires with uneven wear patterns are installed.*1
  - Tires that are the wrong size are installed.*1
  - A flat tire has been fixed temporarily with a tire repair kit.
  - The suspension has been modified (including a genuine SUBARU suspension that has been modified).
  - An object that obstructs the camera's view is installed on the vehicle.
  - Tire chains are installed.
  - The headlights are dirty or they have snow and ice or dirt on them. (Objects are not correctly illuminated and are difficult to detect.)
  - The optical axes are not aligned correctly. (Objects are not correctly illuminated and are difficult to detect.)
  - The lights including headlights and fog lights have been modified.
  - Vehicle operation has become unstable due to an accident or malfunction.
  - The brake system warning light is illuminated.*2
  - The vehicle is tilted at an extreme angle due to loaded cargo or other factors.
  - The maximum number of occupants is exceeded.
  - The combination meter is not operating properly; such as when the lights do not illuminate, the beeps do not sound, the display is different from when it is normal, etc.*3

  *1: The wheels and tires have functions that are critically important. Be sure to use the correct ones. For details, refer to the vehicle Owner's Manual.

  *2: If the brake system warning light does not turn off, immediately pull the vehicle over in a safe place and contact a SUBARU dealer to have the system inspected. For details, refer to the vehicle Owner's Manual.

  *3: For details about the combination meter, refer to the vehicle Owner's Manual.

Continued on next page ⇒

⇒ Continued from previous page

Activation of Pre-Collision Braking System when you make a turn

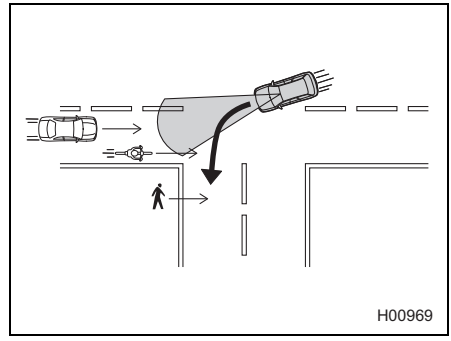

- The Pre-Collision Braking System recognizes oncoming vehicles, oncoming motorcycles, pedestrians or oncoming cyclists as identified objects when you are making a turn. The system is intended to avoid or reduce the severity of collisions with oncoming vehicles that are approaching in the neighboring oncoming lane, but the vehicle may not be able to stop or the system may not activate under certain conditions*.
- If your vehicle is moving faster than approximately 16 mph (25 km/h) (faster than approximately 22 mph (35 km/h) if the identified object is an oncoming pedestrian, and out of the range between approximately 7 mph (10 km/h) and 12 mph (20 km/h) if the identified object is a pedestrian approaching from behind) when you turn, the system will not activate. Also, even if your vehicle speed is within the activation range of the system, if the obstacle suddenly cuts in front of you or is outside the camera's field of view, your vehicle may not stop or the system may not activate depending on various conditions* such as visibility or the slipperiness of the road.

*: Conditions

- Speed difference with the identified object, distance to the identified object, the angle of approach, changes in the actions of the identifiable object and the position of the identifiable object relative to the side of your vehicle.
- Vehicle conditions (amount of load, number of occupants, etc.)
- Road conditions (grade, slipperiness, shape, bumps, etc.)
- Visibility ahead is poor (rain, snow, fog or smoke, etc.).
- The obstacle is something other than an identifiable object.
  - A parked vehicle or a vehicle that is traveling in the same direction as your vehicle
  - An animal, etc.
  - A guardrail, telephone pole, tree, fence or wall, etc.
- Even if an identified object has been detected, you are not signaling to move in the direction that your vehicle is actually traveling.
- Even if the object is an identifiable object, it is traveling close to objects on the side of the road.
- Even if the object is an identifiable object, it is stopped or traveling in your lane.

- Even if the object is an identifiable object, the system cannot recognize it as an identified object because, for example, the front of the identifiable object cannot be seen or is difficult to see because it is driving without its headlights on at night.
- Even if the obstacle is an oncoming vehicle, your vehicle moved into the oncoming vehicle's path before the system could recognize it as an identified object.
- Even if the object is an identifiable object, your vehicle is in the oncoming lane.

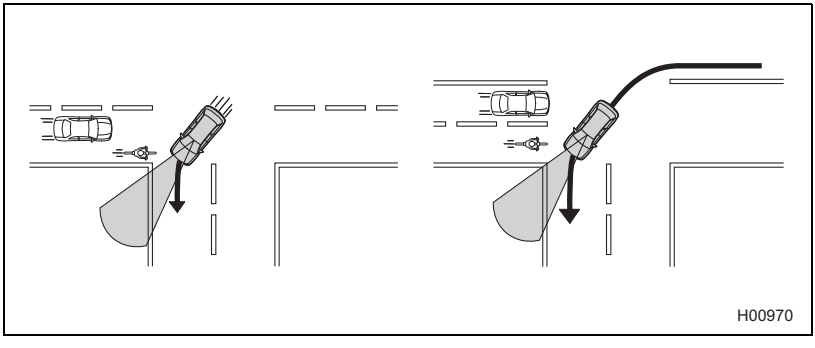

- Even if the object is an identifiable object, depending on the brightness of the surroundings, its relative movement, its aspect, and the direction it is facing, there may be cases when the system cannot detect it as an identified object.

• In particular, there is a high possibility that your vehicle cannot stop or that the system will not activate in the following cases:
- Visibility is poor due to water, snow, dust, etc. kicked up by another vehicle, or due to water vapor, sand, smoke, etc. in the air.
- Approaching an oncoming motorcycle, a pedestrian or an oncoming cyclist at night.
- The identified object is outside the area illuminated by the headlights.
- The front aspect of the oncoming vehicle is small, low or irregular.
- The vehicle, etc. has its side facing you.
- The vehicle, etc. is backing up.
- The oncoming vehicle suddenly swerves, accelerates or decelerates.
- The identified object suddenly cuts in from the side or suddenly runs in front of you.
- The identified object is close to your vehicle's bumper.
- You turn the steering wheel suddenly away or back to your direction of travel.
- The angle of the crossing road is acute, or you are entering into a road that curves very gently, etc.
- Entering a crank, curve, road that forks several times, etc.

CAUTION

- In the following situations, turn off Pre-Collision Braking System. Otherwise Pre-Collision Braking System may activate unexpectedly.
  ⇒ Page 62
  - The vehicle is being towed.
  - The vehicle is being loaded onto a carrier.
  - A chassis dynamometer, free-rollers or similar equipment is being used.
  - A mechanic lifts up the vehicle, starts the hybrid system and spins the wheels freely.
  - Passing hanging banners, flags or branches
  - Thick/tall vegetation is touching the vehicle.
  - Driving on a race track
  - In a drive-through car wash

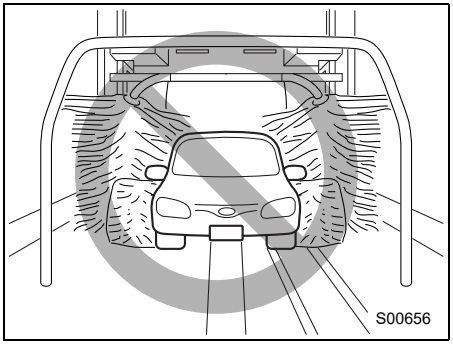

- Pre-Collision Braking System may activate in the following situations. Therefore concentrate on safe driving.
  - Passing through an automatic gate (opening and shutting)
  - Driving close to an identified object
  - Reflection or markings on a wall or the road surface in front of your vehicle is difficult to distinguish from an identified object.
  - Driving in a location where the grade of the road changes rapidly

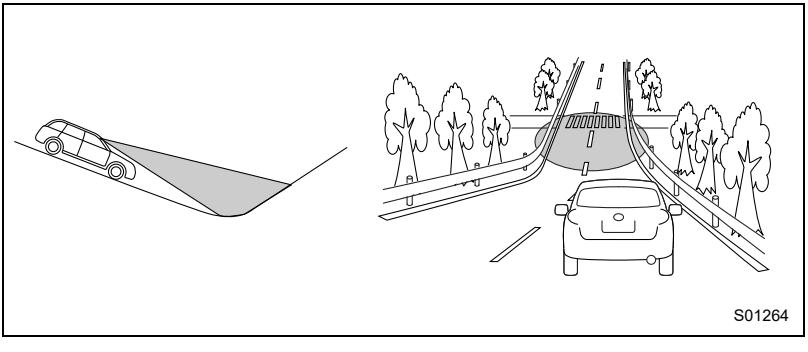

- Visibility is poor due to sand, smoke or water vapor blowing in the wind, or the front vision is obscured due to water splashes, snow, dirt or dust stir up generated by the vehicle in front or oncoming traffic.
- Passing through clouds of steam or smoke, etc.
- In adverse weather, such as heavy snow or snowstorms
- Strong light reflects off dirt or fog on the inside or outside of the windshield in front of the camera, and rays from the light get into the camera.
- The exhaust gas emitted by the vehicle in front is clearly visible in cold weather, etc.

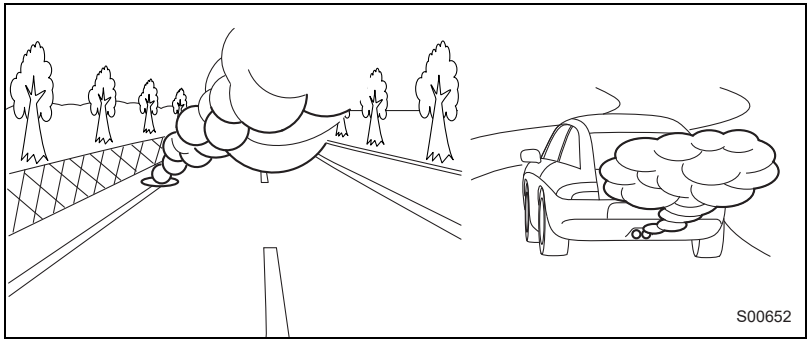

- There is an identified object or obstacle on a curve or intersection.
- You are passing close to an identified object or obstacle, etc.
- Stopping very close to a wall or a vehicle in front

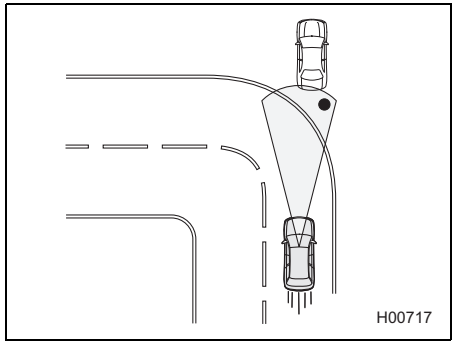

Continued on next page ⇒

⇒ Continued from previous page

- Passing through water spray from road sprinklers or snow clearing sprinklers on the road

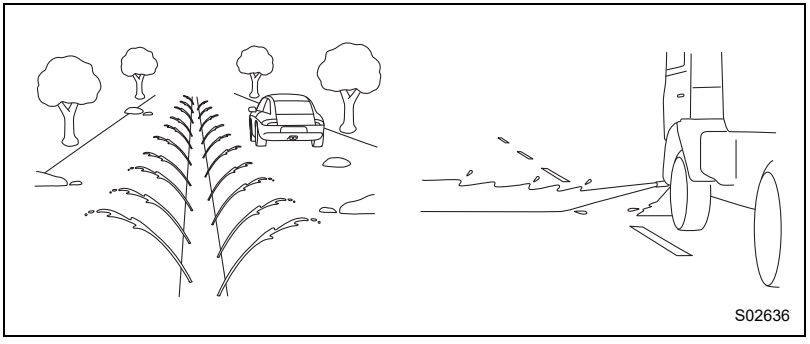

- If there is cargo or installed accessories, etc. that are protruding beyond the edge of the front bumper, the vehicle's length will increase and the system may not be able to prevent a collision.
- Pre-Collision Braking System may activate in the following situations even when there is no identified object approaching.
  - An identified object slows down or stops before an intersection just before you make a turn and enter the oncoming lane.

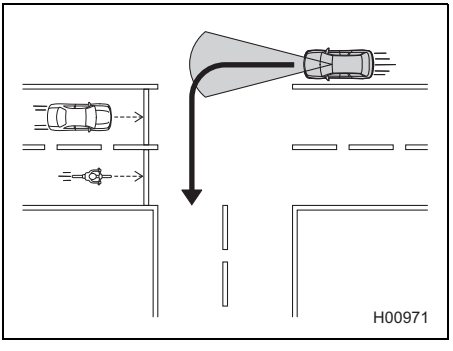

- An identified object passes by just before you make a turn and enter the oncoming lane.

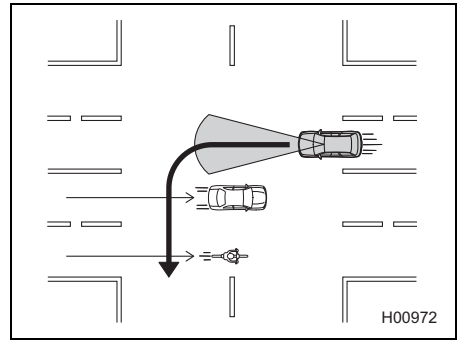

- Just before you make a turn and enter the oncoming lane, you pass by an identified object also making a turn.

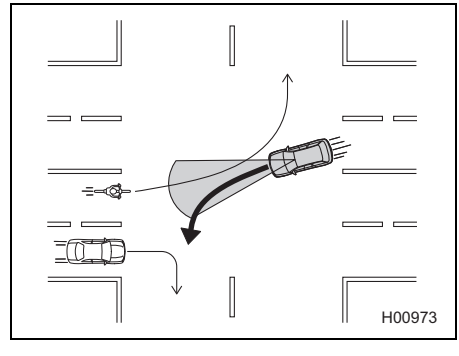

- You suddenly approach close to an identified object while trying to change lanes or avoid an obstacle.
- When you are turning, a pedestrian crosses in front of your vehicle or just before crossing slows down or stops.

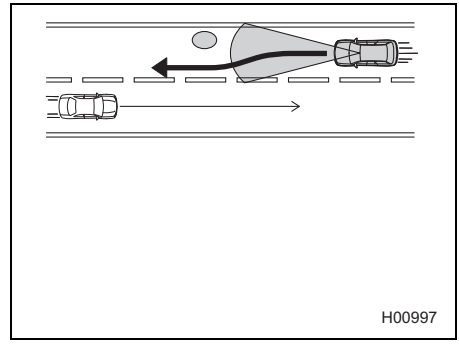

Continued on next page ⇒

⇒ Continued from previous page

- An oncoming motorcycle or an oncoming cyclist suddenly stops or changes direction in front of you just before you make a turn.
- An identified object slows down or stops just before crossing in front of you.

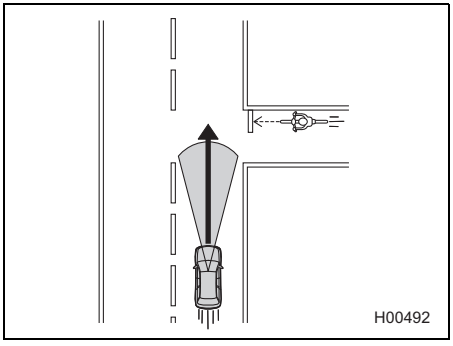

- An identified object changes direction to either join your lane or pass by you in the opposite direction just before crossing in front of you.

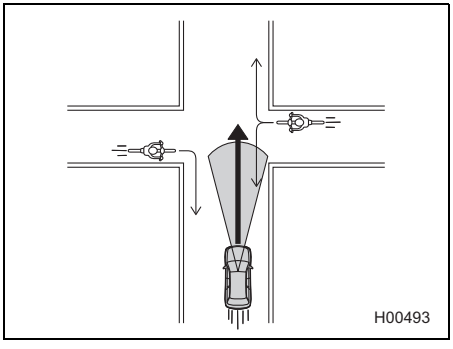

NOTE

Some unusual noises may be audible during automatic braking. This is caused by the braking control and is normal.

Detection of pedestrians

The EyeSight system can also detect pedestrians. The EyeSight system detects pedestrians from their size, shape and movement. The system detects a pedestrian when the contour of the pedestrian is clear.

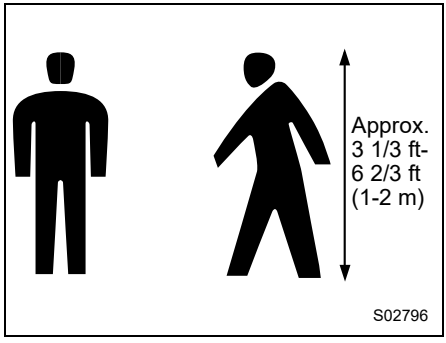

WARNING

Pre-Collision Braking System also identifies pedestrians as identified objects. However, depending on the conditions, there may be cases when the system cannot detect a pedestrian. In the following conditions, the possibility that the system may not be able to detect a pedestrian as an identified object is particularly high.

- Part of a pedestrian's body is obscured.
- Pedestrians are walking in a group.
- A pedestrian is next to a wall or other obstacle.
- A pedestrian is using an umbrella.
- A pedestrian is wearing clothes that are a similar color to the surrounding environment.
- A pedestrian is carrying bulky luggage or tall object, or is pushing an object such as a cart.
- A pedestrian is bending over, crouching down, lying down or making a sudden movement such as standing up.
- A pedestrian is in a dark location.
- A pedestrian suddenly crosses in front of you from the side or suddenly runs in front of you.

Detection of cyclists

The EyeSight system can also detect cyclists. The EyeSight system detects cyclists from their size, shape and movement.
The system can recognize a cyclist when the outline of a rider and bicycle is clear and it detects human-like movement.

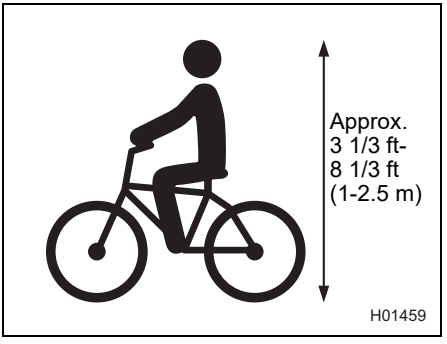

WARNING

Pre-Collision Braking System may not recognize objects as identified objects under certain conditions. In the following conditions, the possibility that the system may not be able to detect a cyclist as an identified object is particularly high.

- Part of the rider or bicycle is obscured.
- A cyclist is moving in a group with other pedestrians or cyclists.
- A cyclist is next to a wall or other obstacle.
- A cyclist's clothing and/or bicycle are similar in color to the surrounding environment.
- A large item is being carried on the bicycle.
- A cyclist is standing while pedaling or leaning over the handlebars.
- A cyclist is in a dark location.
- A cyclist suddenly cuts in from the side or suddenly appears in front of you.
- A cyclist crosses in front of you at a high speed.

Pre-Collision Braking System operation

When there is an obstacle in front of you during driving, the system activates in the following sequence in order to warn the driver and to activate braking control and the brake lights.

Following Distance Warning:
When the system determines that there is a risk of collision, an alert sounds repeated short beeps and an interruption screen is displayed on the combination meter display to warn the driver.
When the driver depresses the brake pedal to decelerate and achieves a suitable following distance, the warning is canceled.

First Braking and Warning:
When the system determines that there is a high risk of collision with an obstacle in front, an alert sounds repeated short beeps and interruption screens are displayed on the combination meter display and the center information display to warn the driver. Braking control may be activated and in some situations, hybrid system output may also be controlled. If the system determines that the amount of evasive action (braking, steering, etc.) taken by the driver has reduced the risk of collision, braking activation is canceled.

Secondary Braking and Warning:
If the system then determines that the risk of collision is extremely high, the alert changes to a continuous beeping sound and stronger braking control is activated. Despite any evasive action taken by the driver, if the system subsequently determines that a collision is unavoidable, the system continues to control braking and hybrid system output.

When the vehicle is stopped by secondary braking, the driver should depress the brake pedal in order to ensure that the vehicle stays stopped.

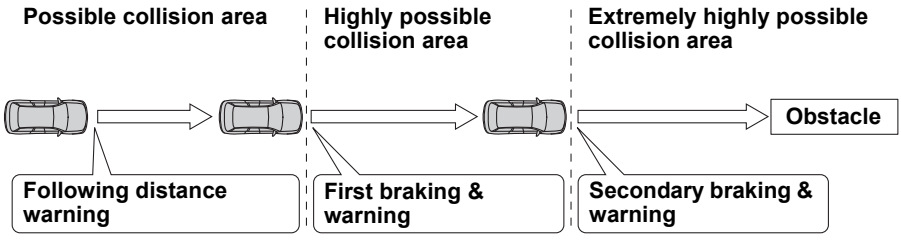

H01238

Operating system	Strength of Automatic Braking	Indication on the combination meter display	Alert type
Following distance warning	No brake control	 H02730	Repeated short beeps
First braking	Moderate		Repeated short beeps
Secondary braking	Strong		Single continuous beep

NOTE

- In the following cases, the brake control after the vehicle has come to a stop through Pre-Collision Braking System will be released.
  - Depress the brake pedal.
  - Depress the accelerator pedal (except when the select lever is in the “N” position).
  - Shift the select lever into the “P” position.
  - The vehicle has been stopped for approximately 2 minutes.
  - The electronic parking brake was applied.

- After stopping with secondary braking, in the following cases, the electronic parking brake will be applied.
  (For details about how to release the electronic parking brake, refer to the vehicle Owner's Manual.)
  - Approximately 2 minutes have elapsed since stopping and the brake pedal is not depressed.
  - Any door (except the rear gate) is opened.
  - The EyeSight system has a malfunction. (EyeSight warning indicator: Yellow)
    ⇒ Page 187
  - The EyeSight system has stopped temporarily. (EyeSight temporary stop indicator: White)
    ⇒ Page 189
- Neither first braking nor secondary braking will operate in the following cases.
  - The vehicle speed is approximately 1 mph (1 km/h) or less (approximately 2 mph (4 km/h) or less when the select lever is in the "N" position), or approximately 100 mph (160 km/h) or more.
  - The vehicle speed is approximately 60 mph (100 km/h) or more, and the obstacle is a motorcycle, a pedestrian or a cyclist.
  - Vehicle Dynamics Control is active.
- If the system detects the brake lights of the vehicle in front, your vehicle will start decelerating earlier than if it does not.
- There are some cases where the first braking is applied for a longer period of time. One of the reasons for this is due to a large speed difference with an obstacle in front. In those cases, stronger or weaker braking control may be activated.

■Pre-Collision Braking System operation screen

After the Pre-Collision Braking System operation, an interruption screen appears and stays on the combination meter display for a certain period of time.

The screen displays the message “Apply Brake To Hold Position” to urge the driver to depress the brake pedal. At this time the alert (beep) sounds. This screen will be displayed for approximately 2 minutes until the driver depresses the brake pedal.



H02373

An interruption screen appears and stays on the combination meter display to indicate that Pre-Collision Braking System has activated.



H02400

Pre-Collision Braking Assist operation

When Pre-Collision Braking System is activated (when the system determines that there is a high risk of collision with an obstacle in front), if the driver depresses the brake pedal, the system determines that this is emergency braking and activates braking assist automatically.

CAUTION

If the driver depresses the brake pedal while following distance warning is activated, Pre-Collision Braking Assist will not work. The vehicle decelerates with the normal braking force operated by the driver.

NOTE

- Pre-Collision Braking Assist does not operate when the vehicle speed is approximately 7 mph (10 km/h) or less, or approximately 100 mph (160 km/h) or more.
- For information about the brake assist function, refer to the vehicle Owner's Manual.

Automatic Emergency Steering operation

If there is an obstacle ahead while driving, the Pre-Collision Braking System activates primary vehicle braking and then secondary braking to help avoid a collision. After secondary braking activates, the system determines whether the road you are driving on has lane markings and also determines whether there is sufficient space for avoiding a collision in your lane. At the same time, the system checks whether there is a vehicle approaching from the rear, using the BSD/RCTA to determine if the lane is clear to activate Automatic Emergency Steering. If there is an extremely high possibility of a collision with the obstacle using only secondary braking, Automatic Emergency Steering is activated, and the system controls the steering wheel to help avoid the collision while staying in the lane. After a collision with the object is avoided, the system continues to control the brake and steering wheel so that your vehicle does not leave its lane until the vehicle comes to a complete stop.

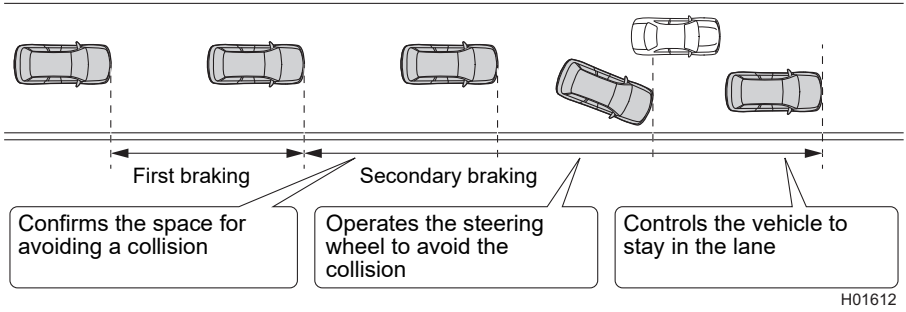

WARNING

- Automatic Emergency Steering recognizes vehicles, motorcycles, pedestrians, and cyclists as identified objects. The system is intended to avoid or reduce the severity of collisions, but if the system cannot recognize objects due to certain conditions*, it may not activate.
- When Automatic Emergency Steering activates, the driver should check the area around the vehicle and then take appropriate action, such as operating the steering wheel or depressing the brakes.

- Automatic Emergency Steering is set to activate when the system determines a collision cannot be avoided with Pre-Collision Braking System only and other conditions such as driving conditions and object recognition are met; its effectiveness changes based on a variety of conditions. Therefore, this function will not always exhibit the same performance.
- Automatic Emergency Steering does not activate when Pre-Collision Braking System is turned off. The function also does not activate when the deceleration from Pre-Collision Braking System is not sufficient.
- If the driver is operating the steering wheel, and the system determines that the operation is evasive action, then operation of the steering wheel by the system may not activate.
- Automatic Emergency Steering will not activate if the system determines that the driver is not gripping the steering wheel.
- This function will not activate if your vehicle's speed is more than approximately 50 mph (80 km/h). Also, even if your vehicle's speed is approximately 50 mph (80 km/h) or slower, if another vehicle suddenly cuts in front of you, a collision may not be avoidable or the function may not activate depending on various conditions* such as visibility or the slipperiness of the road.

*: Conditions
- Vehicle conditions (amount of load, number of occupants, etc.)
- Road conditions (grade, slipperiness, shape, bumps, etc.)
- Visibility ahead is poor (rain, snow, fog or smoke, etc.).
- Even if the object is an identifiable object, depending on the brightness of the surroundings, its relative movement, its aspect, and the direction it is facing, there may be cases when the system cannot detect it.
- Even if the object is an identified object, the system determines that it may cross in front of you or move sideways, based on its aspect or the direction it is facing.
- Even if the object is an identified object, the object is determined to be moving across your path such as crossing the street or cutting in front of you.
- In a collision with an identified object that is near the center of the path in front of your vehicle.

Continued on next page ⇒

⇒ Continued from previous page

- The system determines that operation by the driver (based on accelerator pedal operation, braking, steering wheel angle, etc.) is intended as evasive action.
- Vehicle maintenance status (brake systems, tire wear, tire pressure, whether a temporary spare tire is being used, etc.)
- A trailer or another vehicle, etc. is being towed.
- The brakes are cold due to the outside temperature being low or just after starting the hybrid system.
- The brakes are overheated on downhill grades (braking performance is reduced).
- In rain or after washing the vehicle (the brakes are wet and braking performance is reduced)
- The obstacle is not recognized as an identified object.
- Lane markings cannot be detected.
- Steering wheel operation by the driver cannot be detected.
- You are driving on a road that is not straight.
- You are driving on a road with a steep grade.

- Recognition conditions of the stereo camera
  In particular, the function may be unable to stop the vehicle or may not activate in the following cases.
  - Roads with lane restrictions or tentative lanes due to construction work, etc.
  - Roads with curves
  - Old lane markings remain.
  - Snow, puddles or snow melting agents remain on the road surface.
  - Cracks or constructed traces remain on the road surface.
  - Frozen roads, snow-covered roads or other slippery road surfaces
    The tires may spin, causing loss of control of the vehicle.
  - Entering a sharp curve into an interchange or junction, or a service area, parking area, toll booth or other facilities
  - A vehicle, cyclist or pedestrian is approaching the area near to the object.
  - An oncoming vehicle or a vehicle that will overtake you is approaching.
  - The identified object is moving across your path.

  - The boundaries of your lane are difficult to determine with the stereo camera. (For example, there are no lane markings (white lines, etc.), or the lane markings are difficult to see because they are faint, thin or similar in color to the road.)
  - A vehicle is approaching from the front in the neighboring lane.
  - There is not enough space to avoid a collision within your lane.
  - The area around your rear bumper is dirty, or it has frost, mud, etc. on it.
  - Your rear bumper is scratched, dented, misaligned, etc.
  - You are driving on a snowy road, or the road has puddles or is wet, and your vehicle or nearby vehicles are kicking up water, snow, etc. from the road.
- Never attempt to test the operation of Automatic Emergency Steering.
  - Your vehicle may not stop, or the system may not activate, which can lead to an unintended collision.
- The system may not operate correctly under the conditions listed below. When these conditions occur, turn off Automatic Emergency Steering.
  ⇒ Page 62
  - The tire pressure is not correct.[*1]
  - Tires that are unevenly worn or tires with uneven wear patterns are installed.[*1]
  - Tires that are the wrong size are installed.[*1]
  - The wheels are out of balance (e.g., the balance weight is removed or misaligned).[*1]
  - The wheels are out of alignment.[*1]
  - There is an abnormal vibration in the steering wheel or the steering wheel is heavier than usual.
  - The steering wheel has been replaced with parts other than genuine SUBARU parts.
  - A trailer or another vehicle, etc. is being towed.
  - A flat tire has been fixed temporarily with a tire repair kit.
  - The suspension has been modified (including a genuine SUBARU suspension that has been modified).

Continued on next page ⇒

⇒ Continued from previous page

- An object that obstructs the stereo camera's view is installed on the vehicle.
- Tire chains are installed.
- The temporary spare tire is installed.
- The headlights are dirty or they have snow and ice or dirt on them. (Objects are not correctly illuminated and are difficult to detect.)
- The optical axes are not aligned correctly. (Objects are not correctly illuminated and are difficult to detect.)
- The lights including headlights and fog lights have been modified.
- Vehicle operation has become unstable due to an accident or malfunction.
- The brake system warning light is illuminated.*2
- The power steering warning light is illuminated.
  ⇒ Refer to the vehicle Owner's Manual for details.
- The vehicle is tilted at an extreme angle due to loaded cargo or other factors.
- The maximum number of occupants is exceeded.
- The combination meter is not operating properly; such as when the lights do not illuminate, the beeps do not sound, the display is different from when it is normal, etc.*3

*1: The wheels and tires have functions that are critically important. Be sure to use the correct ones. For details, refer to the vehicle Owner's Manual.

*2: If the brake system warning light does not turn off, immediately pull the vehicle over in a safe place and contact a SUBARU dealer to have the system inspected. For details, refer to the vehicle Owner's Manual.

*3: For details about the combination meter, refer to the vehicle Owner's Manual.

- The stereo camera may have difficulty detecting the lane markings under the following conditions and the system may not operate properly.
  - At night or in a tunnel without the headlights on
  - In bad weather (for example, rain, snow or thick fog)
  - The road surface is wet and shining by reflected light.
  - There are other traffic markings in your lane (arrows, words, etc.).
  - The distance between your vehicle and the vehicle in front is short, making it difficult to detect lane markings.
  - A vehicle intruded from a neighboring lane or the vehicle in front changed lanes.
  - The shape of a curve in the road suddenly changes.
  - Shadows of guardrails or similar objects are overlapped on the lane markings.
  - Strong light is coming from the front (sunlight or headlight beams of oncoming traffic, etc.).
  - The width of a lane is either too narrow or too wide.
  - The width of a lane has changed.

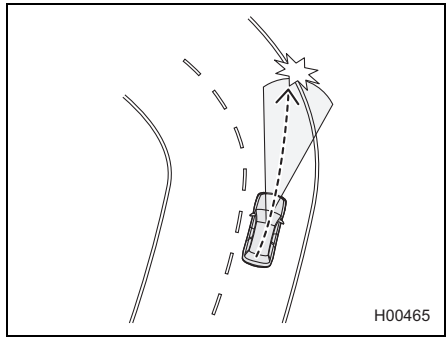

  - The stereo camera may have difficulty detecting the lane due to the performance of the camera.
    - There are no lane markings or they are very worn.
    - The lane markings are painted in yellow.
    - The lane markings are similar in color to the road surface.
    - The lane markings are drawn in double.
    - The width of lane markings is narrow.
    - Lines that are not lane markings are painted on roads.
    - The lane markings are touching the walls and poles.

Continued on next page ⇒

⇒ Continued from previous page

- The shape of lane markings suddenly changes (entrance/exit of a curve, crank and winding road, etc.).

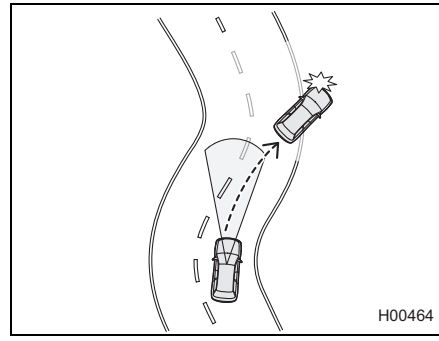

- Going into lanes that lead to interchanges, junctions, service areas or parking areas
- There is a curb or a side wall on the road shoulder.
- The brightness changes such as at a tunnel entrance or exit or when you drive under an overpass.
- Fluid has not been fully wiped off the windshield during or after washer use.

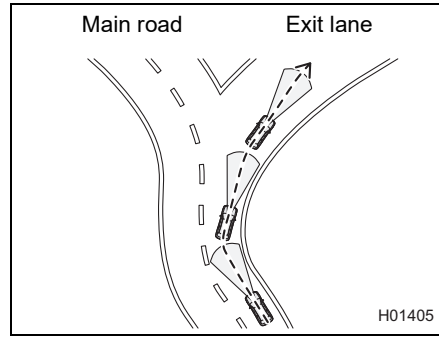

CAUTION

- Automatic Emergency Steering may activate unexpectedly in the following situations. Therefore be sure to turn off Automatic Emergency Steering.
  ⇒ Page 62
  - The vehicle is being towed.
  - The vehicle is being loaded onto a carrier.
  - A chassis dynamometer, free-rollers or similar equipment is being used.
  - A mechanic lifts up the vehicle, starts the hybrid system and spins the wheels freely.
  - Passing hanging banners, flags or branches
  - Thick/tall vegetation is touching the vehicle.
  - Driving on a race track
  - In a drive-through car wash

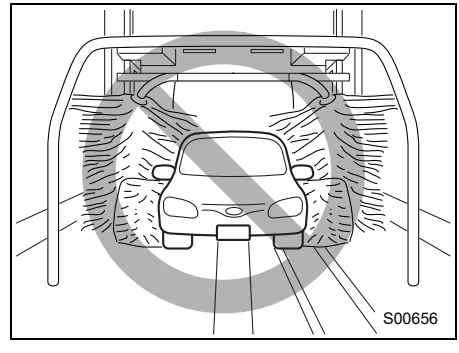

- Automatic Emergency Steering may activate in the following situations. Therefore concentrate on safe driving.
  - You are approaching an identified object.
  - Visibility is poor due to sand, smoke or water vapor blowing in the wind, or the front vision is obscured due to water splashes, snow, dirt or dust stir up generated by the vehicle in front or oncoming traffic.

Continued on next page ⇒

⇒ Continued from previous page

- Passing through clouds of steam or smoke, etc.
- In adverse weather, such as heavy snow or snowstorms
- The exhaust gas emitted by the vehicle in front is clearly visible in cold weather, etc.

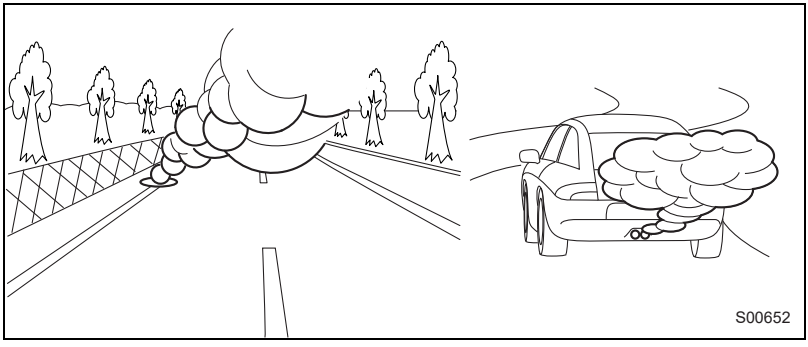

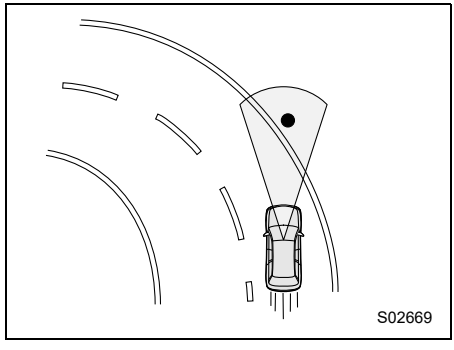

- There is an obstacle on a curve or intersection.
- You are passing close to the side of an identified object, obstacle or vegetation.
- The system cannot recognize an object that suddenly appears or suddenly cuts in front of your vehicle from the side.
- The obstacle begins to move suddenly.
- There are no lane markings for your lane, but a difference in color between your lane and the neighboring lane, shoulder, etc. could be mistaken for lane markings.

- There is dirt, cracks, curbs, etc. that could be mistaken for lane markings in your lane.
- The road is narrow and markings in the oncoming lane could be mistaken for lane markings for your lane.
- Passing through water spray from road sprinklers or snow clearing sprinklers on the road

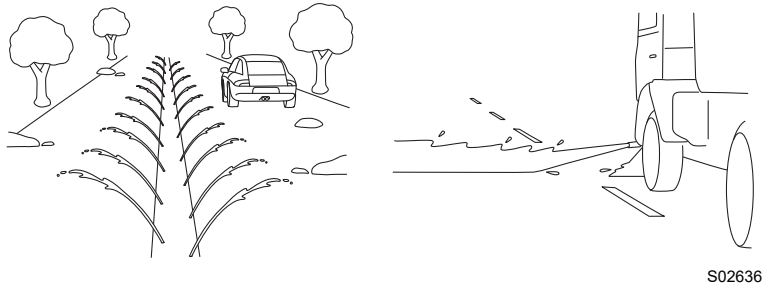

- To cancel Automatic Emergency Steering, turn the steering wheel or depress the accelerator pedal.
- If there is cargo or installed accessories, etc. that are protruding beyond the edge of the front bumper, the vehicle's length will increase and the system may not be able to prevent a collision.

NOTE

Automatic Emergency Steering will not activate in the following situations.

- Pre-Collision Braking System is off.
- BSD/RCTA is off.
- The obstacle is an oncoming vehicle, an oncoming motorcycle or an oncoming cyclist.
- An identified object is crossing in front of your vehicle.
- There is not enough space to avoid a collision, or another object has been detected in the area around the space for avoiding a collision.
- Objects are approaching from the front or rear of your vehicle.
- The lane or lane markings cannot be detected.
- Pre-Collision Braking System is active due to guardrails or other structures.
- The system determines steering control cannot avoid a collision.
- Emergency Stop Assist is activating.
- The EyeSight system has a malfunction. (EyeSight warning indicator: Yellow)
  ⇒ Page 187
- The EyeSight system has stopped temporarily. (EyeSight temporary stop indicator: White)
  ⇒ Page 189

When Automatic Emergency Steering activates, an interruption screen appears on the combination meter display for a certain period of time to notify you of the activation.
⇒ Page 48

Automatic Emergency Steering malfunction and temporary stop

If Automatic Emergency Steering temporarily stops, (Automatic Emergency Steering OFF indicator) illuminates. When the cause has been resolved, operation returns to normal. This indicator will also appear in extremely hot or cold environments, and if there is an abnormality in the battery voltage.

If (Automatic Emergency Steering OFF indicator) stays illuminated for a long time, the EyeSight system may have a malfunction. Contact a SUBARU dealer and have the system inspected.

NOTE

You cannot use Automatic Emergency Steering when BSD/RCTA is turned off. In this case, (Automatic Emergency Steering OFF indicator) illuminates.

■ Automatic Emergency Steering OFF indicator

This indicator illuminates when the ignition switch is turned to the ON position, and then turns off several seconds after the hybrid system starts.
It illuminates when Automatic Emergency Steering is turned off.
⇒ Page 62

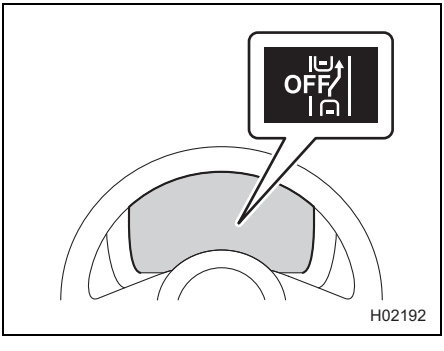

Turning on/off Pre-Collision Braking System

While the vehicle is stopped, operate the center information display to turn on/off Pre-Collision Braking System (including Pre-Collision Braking Assist and Automatic Emergency Steering).
This function is turned on by selecting “Setting ON” on the “Pre-Collision Braking” screen of the EyeSight settings.
This function is turned off by selecting “Setting OFF” on the “Pre-Collision Braking” screen of the EyeSight settings.
⇒ Page 193

If Pre-Collision Braking System is turned off,  (Pre-Collision Braking System OFF indicator light) illuminates on the combination meter.
If Pre-Collision Braking System is turned on,  (Pre-Collision Braking System OFF indicator light) turns off on the combination meter.

NOTE

- The on/off setting for Pre-Collision Braking System operates in cooperation with Automatic Emergency Steering and Pre-Collision Throttle Management.
- Even when Pre-Collision Braking System is turned off, if the hybrid system is turned off and then restarted, Pre-Collision Braking System will be turned on. The system default setting when the vehicle is restarted is on.
- Pre-Collision Braking System cannot be turned off while Lane Centering Function is operating.

■Pre-Collision Braking System OFF indicator light

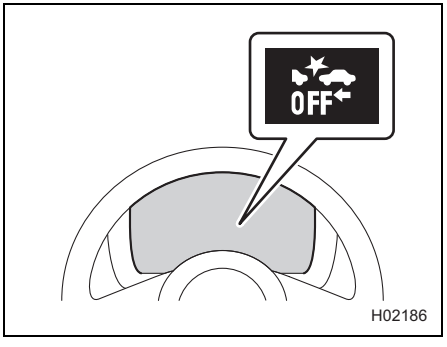

This indicator light illuminates when the ignition switch is turned to the ON position, and then turns off several seconds after the hybrid system starts. It illuminates when Pre-Collision Braking System and Pre-Collision Throttle Management are turned off.

It also illuminates under the following conditions.

- The EyeSight system has a malfunction. (EyeSight warning indicator: Yellow)
  ⇒ Page 187
- The EyeSight system has stopped temporarily. (EyeSight temporary stop indicator: White)
  ⇒ Page 189

NOTE

- If (Pre-Collision Braking System OFF indicator light) illuminates, (Automatic Emergency Steering OFF indicator) also illuminates.
  ⇒ Page 61
- When (Pre-Collision Braking System OFF indicator light) illuminates, Pre-Collision Braking System (including Pre-Collision Braking Assist), Automatic Emergency Steering and Pre-Collision Throttle Management do not operate.
- You cannot use Automatic Emergency Steering when BSD/RCTA is turned off. In this case, (Automatic Emergency Steering OFF indicator) illuminates.

Wide angle mono camera OFF indicator

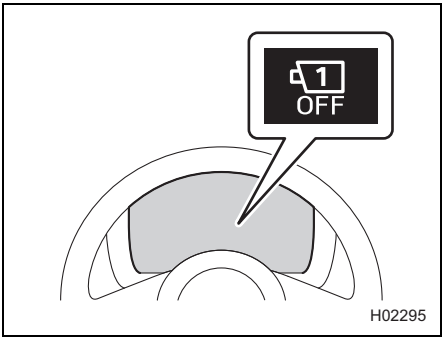

If the wide angle mono camera temporarily stops, (wide angle mono camera OFF indicator) illuminates. When the cause has been resolved, operation returns to normal.
This indicator will also appear if the inside or outside of the windshield in front of the wide angle mono camera is dirty or fogged, in extremely hot or cold environments, and if there is an abnormality in the battery voltage.
If (wide angle mono camera OFF indicator) stays illuminated for a long time, contact a SUBARU dealer and have the system inspected.

NOTE

- If (wide angle mono camera OFF indicator) illuminates while (Pre-Collision Braking System OFF indicator light) is not illuminated, the field of view of the EyeSight system is narrower than usual. In this situation, the ability of EyeSight to detect obstacles is reduced, and Pre-Collision Braking System may not be able to stop the vehicle or may not activate.
- If the outside of the windshield in front of the wide angle mono camera is dirty or fogged, clean the windshield.
- If the inside of the windshield in front of the wide angle mono camera is fogged, the system will restart after you have driven your vehicle for a while and conditions improve. Also, the defroster may be effective in improving the conditions.
  ⇒ Refer to the vehicle Owner's Manual for details.
- If the inside of the windshield in front of the wide angle mono camera or the area around the camera lenses is dirty or constantly fogged, contact a SUBARU dealer to have the vehicle inspected.

Wide angle mono camera warning indicator

This indicator illuminates when a malfunction occurs in the system. Contact a SUBARU dealer and have the system inspected.

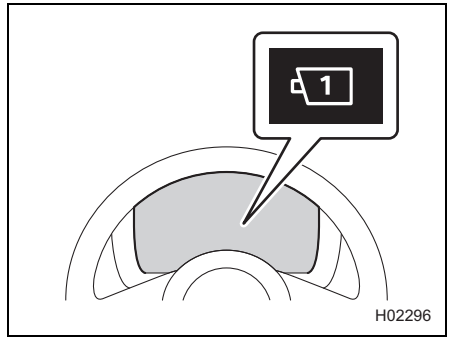

NOTE

- If 1 (wide angle mono camera warning indicator) illuminates while OFF (Pre-Collision Braking System OFF indicator light) is not illuminated, the field of view of the EyeSight system is narrower than usual. In this situation, the ability of EyeSight to detect obstacles is reduced, and Pre-Collision Braking System may not be able to stop the vehicle or may not activate.
- If 1 (wide angle mono camera warning indicator) continues illuminating even after the hybrid system has been restarted, the wide angle mono camera system has a malfunction. Normal driving will still be possible. However, contact a SUBARU dealer for an inspection.

Adaptive Cruise Control

Adaptive Cruise Control is a driving support system intended to allow more comfortable driving on expressways, freeways and interstate highways. The stereo camera detects vehicles in front that are driving in the same traffic lane, and your vehicle follows the vehicle in front up to the set vehicle speed. While following, your vehicle will automatically maintain a following distance that corresponds to the speed of the vehicle in front. When the vehicle in front comes to a complete stop, your vehicle will also be stopped and the electronic parking brake will be automatically applied. The vehicle is capable of being controlled at a speed between 0 mph (0 km/h) and approximately 90 mph (145 km/h). Please remember that you should not exceed posted speed limits.

⚠ WARNING

- This system does not provide the driver with an automatic driving function that handles all traffic conditions.
- Do not rely excessively on Adaptive Cruise Control. This system is not intended to assist in driving when the driver is not paying full attention to what is ahead of him/her due to distractions or a lack of concentration while driving, or under conditions of poor visibility. It is not intended to prevent rear-end collisions.
  Strive for safe driving at all times. Always maintain a safe following distance behind the vehicle in front of you, pay attention to your surroundings and the driving conditions, and operate either the accelerator or the brake pedal and/or take other actions as necessary.
- When using Adaptive Cruise Control, always set the speed according to the speed limit, traffic flow, road conditions, and other conditions.
- Before using the system, perform a daily inspection and verify that there are no malfunctions of the tires or brakes.
  ⇒ Refer to “Warranty and Maintenance Booklet”.

- The system may not operate correctly under the conditions listed below. When these conditions occur, do not use Adaptive Cruise Control.
  - The tire pressure is not correct.*1
  - The temporary spare tire is installed.*1
  - Tires that are unevenly worn or tires with uneven wear patterns are installed.*1
  - Tires that are the wrong size are installed.*1
  - A flat tire has been fixed temporarily with a tire repair kit.
  - The suspension has been modified (including a genuine SUBARU suspension that has been modified).
  - An object that obstructs the stereo camera's view is installed on the vehicle.
  - Tire chains are installed.
  - The headlights are dirty or they have snow and ice or dirt on them. (Objects are not correctly illuminated and are difficult to detect.)
  - The optical axes are not aligned correctly. (Objects are not correctly illuminated and are difficult to detect.)
  - The lights including headlights and fog lights have been modified.
  - Vehicle operation has become unstable due to an accident or malfunction.
  - The brake system warning light is illuminated.*2
  - The vehicle is tilted at an extreme angle due to loaded cargo or other factors.
  - The maximum number of occupants is exceeded.
  - A trailer or another vehicle, etc. is being towed.
  - The combination meter is not operating properly; such as when the lights do not illuminate, the beeps do not sound, the display is different from when it is normal, etc.*3

  *1: The wheels and tires have functions that are critically important. Be sure to use the correct ones. For details, refer to the vehicle Owner's Manual.

  *2: If the brake system warning light does not turn off, immediately pull the vehicle over in a safe place and contact a SUBARU dealer to have the system inspected. For details, refer to the vehicle Owner's Manual.

  *3: For details about the combination meter, refer to the vehicle Owner's Manual.

Continued on next page ⇒

⇒ Continued from previous page

- Adaptive Cruise Control is designed for use on expressways, freeways, toll roads, interstate highways and similar limited access roads. It is not intended to be used in city traffic. In the following conditions, do not use Adaptive Cruise Control. Doing so may result in an accident.
  - Ordinary roads (roads other than those mentioned above)
    Depending on the driving environment (complexity of roads and other factors), the system may not be able to perform as the traffic conditions require, and that may result in an accident.
  - Sharp curves or winding roads
  - Frozen roads, snow-covered roads or other slippery road surfaces
    The tires may spin, causing loss of control of the vehicle.
  - Traffic conditions when frequent acceleration and deceleration make it difficult to maintain the following distance
    It may not be possible for the system to perform as the traffic conditions require.
  - Steep downhill grades
    The set vehicle speed may be exceeded.
  - On a steep continuous downhill grade
    The brakes may overheat.
  - Roads and overpasses with repeated steep uphill and downhill grades
    Detection of the vehicle in front may be lost, or the road surface may be detected instead of the vehicle in front, making correct control impossible.
  - Entering a sharp curve/turn into an interchange or junction, or a service area, parking area, toll booth or other facilities
    Detection of the vehicle in front may not be possible.

- Visibility is poor due to sand, smoke or water vapor blowing in the wind, or the front vision is obscured due to water splashes, snow, dirt, water spray from road sprinklers or snow clearing sprinklers on the road, or dust stir up generated by the vehicle in front or oncoming traffic.
  Detection of the vehicle in front may be lost, or water or other substances may be incorrectly detected instead, making correct control impossible.

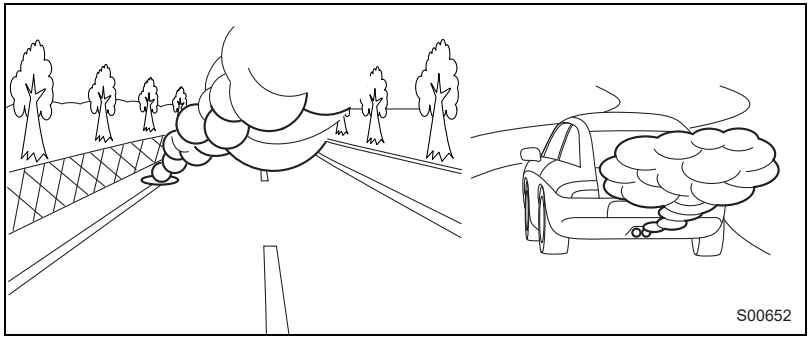

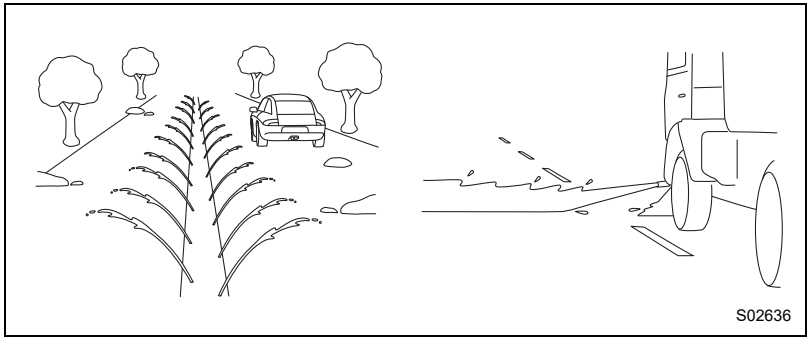

- In adverse weather, such as heavy snow or snowstorms
- The stereo camera's field of view is obstructed by fogging, snow, dirt, frost, dust, scratches, or smears on the windshield, or by light reflecting off the dirt, etc.
- Water droplets from rain or the window washer, or dirt has not been fully wiped off the windshield.
  Detection of the vehicle in front may be lost, or water or other substances may be incorrectly detected instead, making correct control impossible.
- The stereo camera's field of view is obstructed (for example by a canoe on the roof of the vehicle).

Continued on next page ⇒

⇒ Continued from previous page

- The stereo camera may have difficulty detecting the following objects or conditions. Operate either the accelerator or the brake pedal and/or take other actions as necessary.
  - Vehicles at significantly different speeds (vehicles driving slowly, stopped or oncoming vehicles, etc.)
  - Vehicles cutting into your lane
  - Motorcycles, cyclists, pedestrians and animals, etc.
  - At night or in a tunnel without the headlights on
  - At night or in a tunnel when there is a vehicle in front that does not have its taillights on
  - Strong light is coming from the front (sunlight or headlight high beams, etc.).
  - The rear aspect of the vehicle in front is low, small or irregular (the system may recognize another part of the vehicle as its rear and will determine operation from that).
    - There is an empty truck or trailer with no rear and/or side panels on the cargo bed.
    - Vehicles that have cargo protruding from their back ends
    - Non-standard shaped vehicles (vehicle transporters or vehicles with a sidecar fitted, etc.)
    - The height of the vehicle is low, etc.

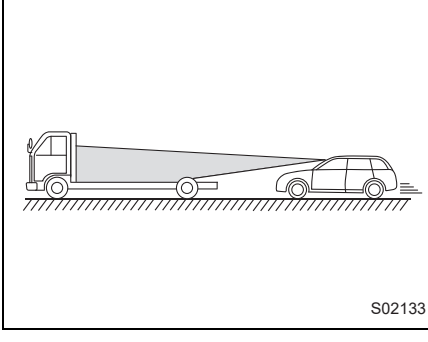

  - The brightness changes such as at a tunnel entrance or exit or when you drive under an overpass.
  - Objects that are located close to the bumper of your vehicle
- When you do not use Adaptive Cruise Control, be sure to turn it off. If the function is left on, the function may operate unexpectedly, causing an accident. Also, when parking, be sure to apply the electronic parking brake and shift the select lever to the “P” position.
  ⇒ Page 93
- Before using Adaptive Cruise Control, be sure to fully verify the safety of the vehicle occupants and the area around the vehicle. Never operate the cruise control from outside the vehicle.

Detection of the vehicle in front by the stereo camera*

- Under the following road conditions or conditions of your vehicle, detection of the vehicle in front may not be possible. Vehicles in neighboring traffic lanes or roadside objects may also be incorrectly detected. Under conditions such as these, do not use Adaptive Cruise Control. If cruise control is currently in use, operate either the accelerator or the brake pedal and/or take other actions as necessary.
  - Following begins from a short following distance, such as when the vehicle in front is a vehicle that cut into your lane.

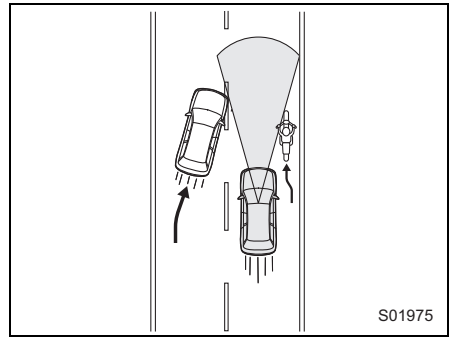

  - On curved roads, at the start and end of a curve and on roads with continuous curves (These conditions make it difficult for the system to detect vehicles because they are outside the detectable area.)
  - On an on-ramp or off-ramp to a freeway, highway, or other restricted access road (Adaptive Cruise Control is not designed for use in this kind of driving environment.)

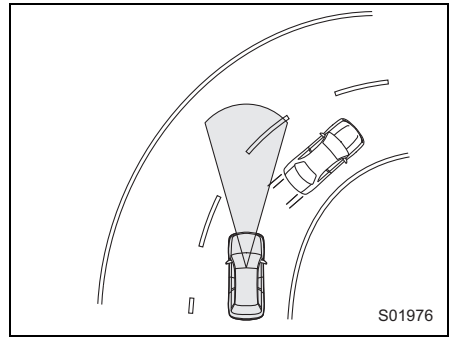

  - In an urban or suburban environment (Adaptive Cruise Control is not appropriate for use in these driving areas. Use Adaptive Cruise Control only on limited-access highways.)

Continued on next page ⇒

⇒ Continued from previous page

- The vehicle in front is not directly ahead of your vehicle and is shifted to one side.

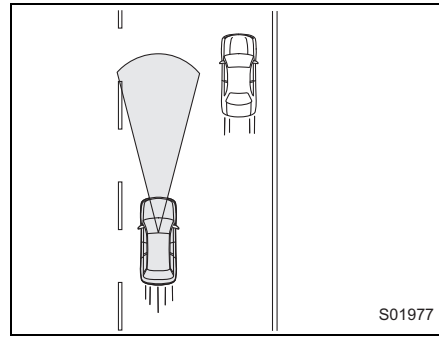

- There is an obstacle on the side of the road.
- The relative speed difference compared to the vehicle in front is large.
- A vehicle cuts into your lane in front of you.
- The distance between vehicles is extremely short.
- Your vehicle or the vehicle in front is drifting within the lane.
- The vehicle in front is driving with wheels over either side of the lane markings.

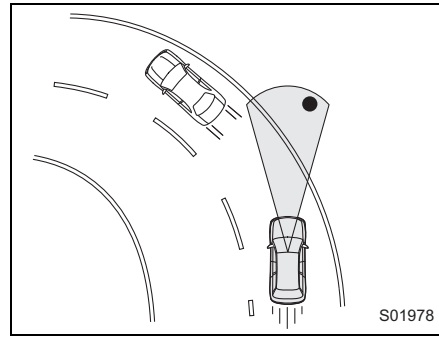

- On a bumpy or unpaved road surface
- On a road with extremely narrow lanes, such as when traffic restrictions are in effect or in areas where construction work is taking place
- Normal driving has become unstable due to an accident or malfunction.
- Extremely heavy cargo is loaded in the cargo area or rear seat of your vehicle.

• There are limits to the situation judgment capabilities of Adaptive Cruise Control. Deceleration may not take place in time in the following situations. Depress the brake pedal to decelerate the vehicle if necessary.
- The speed difference with the vehicle in front is too large or the vehicle in front decelerates unexpectedly.
- The decelerating vehicle in front unexpectedly slows down or suddenly brakes.

- If the alert/notification sounds frequently, do not use Adaptive Cruise Control.
- Even when the following distance is short, the “Obstacle Detected” warning may not activate in the following situations.
  - The difference in speed with the vehicle in front is small. The two vehicles are traveling at almost the same speed.
  - The vehicle in front is traveling faster than your vehicle. The following distance is gradually increasing.
  - Another vehicle cuts into your lane very close to your vehicle.
  - The vehicle in front decelerates suddenly.
  - There are repeated uphill and downhill grades.

  ⇒ Page 94

*: The recognition status of the lead vehicle using the stereo camera can be confirmed by the illumination status of the lead vehicle indicator.

⇒ Page 75

⚠ CAUTION

- After Adaptive Cruise Control has started, it maintains control continuously according to the movement of the vehicle in front. When your vehicle comes to a stop if the vehicle in front has stopped, the stay-stopped function is engaged. However, if the stereo camera has lost detection of the vehicle in front, the system may not stop your vehicle. Operate the brake pedal and maintain the correct following distance as necessary. Be aware that the EyeSight system has difficulty detecting objects or vehicles that have a relative speed in comparison to your vehicle. Therefore, if the EyeSight system loses detection just as you are approaching a line of stopped cars, for example, you will have to brake manually.
- There is no possibility that the vehicle will automatically begin moving from a stay-stopped condition without operation from the driver.
- If the conditions for automatically canceling cruise control (⇒ page 90) are met while the vehicle is stay-stopped, Adaptive Cruise Control is canceled. For safety reasons, the electronic parking brake is automatically applied.
- Braking may not be sufficient depending on the following conditions. Depress the brake pedal and decelerate as necessary.
  - Vehicle conditions (amount of load, number of occupants, etc.)
  - Road conditions (grade, slipperiness, shape, bumps, etc.)
  - Vehicle maintenance condition (brake systems, tire wear, air pressure, temporary spare tire is being used, etc.)
  - The brakes are cold. (For example, just after the hybrid system is started or the outside temperature is low.)
  - For a short period of time when driving after the hybrid system is started until the engine has warmed-up
  - The brakes are overheated on downhill grades (braking performance may be reduced).
  - In rain or after washing the vehicle (the brakes may become wet and braking performance may be reduced.)

How to use Adaptive Cruise Control

■ Setting Adaptive Cruise Control

1. Setting Adaptive Cruise Control to standby status
   Press the (CRUISE) switch. At this time, (Adaptive Cruise Control indicator) (white), your vehicle indicator and the following distance setting indicator are displayed on the combination meter display.
   The set vehicle speed display will read “- - - MPH (- - - km/h)”.

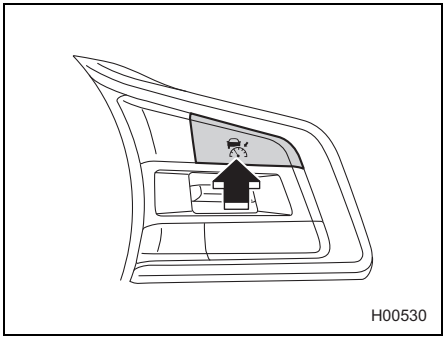
H00530

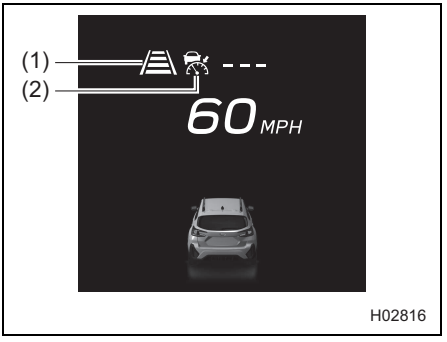

H02816

(1) Following distance setting indicator
(2) Adaptive Cruise Control indicator (white)

To set the ready status:

When all of the following conditions are met, READY (READY indicator) is displayed on the combination meter display, and Adaptive Cruise Control can be activated.

- All doors (except the rear gate) are closed.
- The driver's seatbelt is fastened.
- The electronic parking brake is not applied. The electronic parking brake indicator light is off.
- The select lever is in the "D" or "M" position.
- Gear "1", "2" or "3" has not been selected with the shift paddles.
- The brake pedal is not depressed while driving or the brake pedal is strongly depressed while stopping.
- EyeSight operation is not temporarily stopped. (EyeSight temporary stop indicator: White) is off.
  ⇒ Page 189
- The road is not a steep slope.
- The steering wheel has not been turned significantly in either direction.
- The X-MODE is turned off (the X-MODE indicator is off).
- The vehicle speed is between 0 mph (0 km/h) and approximately 90 mph (145 km/h).
- The engine is not running at a high rpm.
- Vehicle Dynamics Control or Traction Control Function is not active.

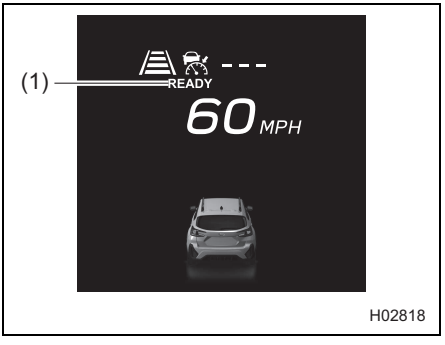

(1) READY indicator

2. Setting Adaptive Cruise Control
   Press the RES/SET switch to the “RES/+” side or the “SET/-” side.
   The vehicle speed at the time the switch is pressed becomes the set vehicle speed, and Adaptive Cruise Control activates.
   If no vehicle in front has been detected, the vehicle drives at the constant set vehicle speed.

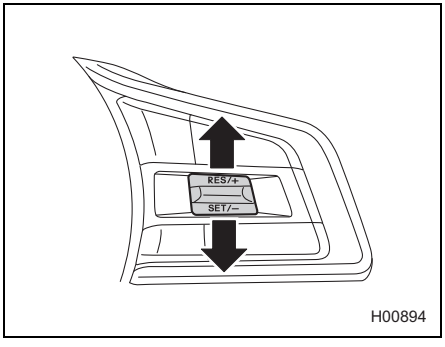

   When Adaptive Cruise Control is activated, READY (READY indicator) turns off, the set vehicle speed is displayed, and (Adaptive Cruise Control indicator) changes from white to green.

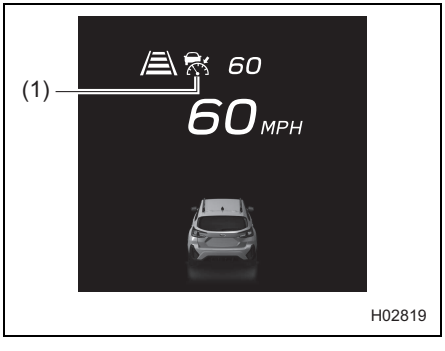

(1) Green

WARNING

When using Adaptive Cruise Control, always set the speed according to the speed limit, traffic flow, road conditions, and other conditions.

NOTE

- The set vehicle speed can be set between 20 mph (30 km/h) and 90 mph (145 km/h).
- If the vehicle speed is approximately 20 mph (30 km/h) or less when the vehicle speed is set, the set vehicle speed is set to 20 mph (30 km/h).
- When driving on a curve, the vehicle may not accelerate, or may decelerate, even if the set vehicle speed is higher than the current vehicle speed.
- If (Adaptive Cruise Control indicator) does not illuminate even when the (CRUISE) switch is pressed, Adaptive Cruise Control will not operate.
- If (Adaptive Cruise Control indicator) does not illuminate even when the (CRUISE) switch is pressed and this occurs frequently, there may be a malfunction in the system. Contact a SUBARU dealer and have the system inspected.

When a vehicle in front is detected, the lead vehicle indicator will illuminate.
The vehicle follows the lead vehicle in front and maintains the selected following distance. At this time, the cruise speed is adjusted to and will not exceed the set vehicle speed. If the vehicle in front is no longer detected, the lead vehicle indicator turns off.

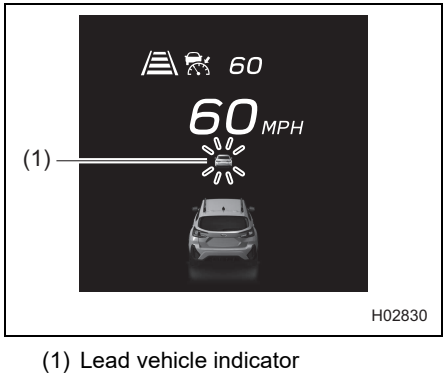

(1) Lead vehicle indicator

NOTE

The notification sound (lead vehicle acquisition sound) that occurs when a vehicle in front is detected or no longer detected while Adaptive Cruise Control is activated can be turned on by changing settings.
⇒ Page 193

Operation of Adaptive Cruise Control

- When no vehicle in front is detected
  The vehicle drives constantly and correspondingly to the set vehicle speed between 20 mph (30 km/h) and 90 mph (145 km/h).

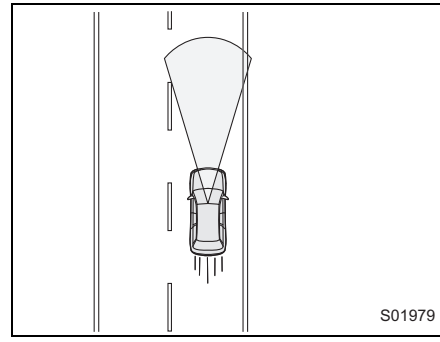

- When a vehicle in front is detected
  The vehicle follows the lead vehicle in front, and will maintain the chosen following distance (there are four settings), up to the set vehicle speed between 20 mph (30 km/h) and 90 mph (145 km/h).

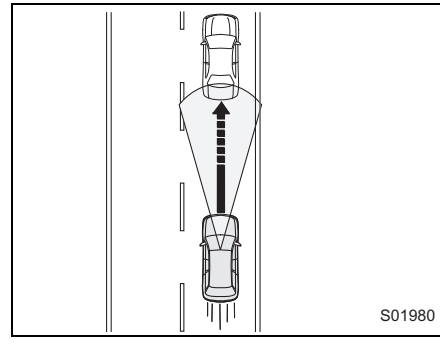

- If your vehicle no longer detects the vehicle in front
  The vehicle accelerates back to the set vehicle speed and will drive at that constant speed.
  If a vehicle in front is detected while accelerating to the set vehicle speed, vehicle following will be started again.

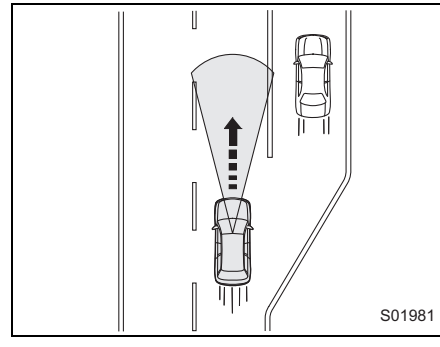

NOTE

- When the brakes are applied by Adaptive Cruise Control, the vehicle's brake lights will illuminate.
- Even if there is no lead vehicle present, on a downhill grade, the Adaptive Cruise Control's automatic brake may operate in order to maintain the set vehicle speed.
- Some noises may be audible during automatic braking. This is caused by the braking control and does not indicate a malfunction.
- To temporarily accelerate quickly, use the accelerator pedal. After accelerating, the vehicle will gradually return to the set vehicle speed shown in the set vehicle speed display.
- If the vehicle in front is no longer detected while your vehicle is still controlled by the automatic braking operation, the brake will be automatically released gradually. Depress the accelerator pedal if necessary.
- If a far away object is recognized as a possible lead vehicle, acceleration will be reduced early.
- The lead-vehicle following function has the following characteristics:
  - If the system detects that the lead vehicle has changed lanes, acceleration to the set vehicle speed will start early.
  - If the lead vehicle's brake lights are detected, deceleration will start earlier than without detection.
  - If the vehicle moves to the fast lane while traveling more than approximately 37 mph (60 km/h), the system starts acceleration to the set vehicle speed more quickly because it is linked with the turn signal.
  - If you operate the turn signal lever at a speed of approximately 6 mph (10 km/h) or more, depending on the surrounding conditions, a vehicle in the lane on the side you indicated with the turn signal may be recognized as the lead vehicle, and your vehicle will maintain the following distance according to that vehicle's speed.
  - If the setting of Driving Lane Customize is different from the actual driving direction, the vehicle may start to accelerate faster than usual when the driver signals a lane change to move from the passing lane to the driving lane.

    ⇒ Page 193

■Increasing the set vehicle speed

●Using the RES/SET switch

- Push to the “RES/+” side briefly.
  Every time the switch is pushed, the set vehicle speed will increase in increments of 1 mph (1 km/h).
- Push to the “RES/+” side continuously.
  While the switch is being pushed, the set vehicle speed will increase in increments of 5 mph (5 km/h).

When operating the switch, the set vehicle speed changes on the combination meter display.

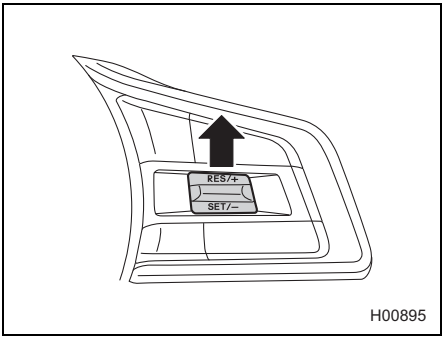

●Using the accelerator pedal

1. Depress the accelerator pedal to increase vehicle speed.
2. When the desired speed is reached, press the RES/SET switch to the “SET/-” side.
   The speed at the time of pressing the switch will be set as the new set vehicle speed, and it appears on the combination meter display.

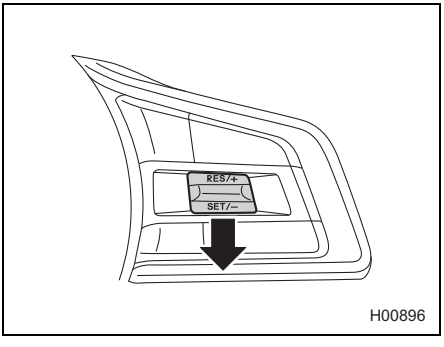

CAUTION

- When the vehicle is following the lead vehicle, the actual vehicle speed is controlled according to the lead vehicle. Therefore, if the RES/SET switch is pressed to the “RES/+” side and set to a speed higher than the speed of the lead vehicle, the vehicle will not accelerate; it will maintain a safe following distance as the first priority. However, because doing so changed the set vehicle speed, when the lead vehicle is no longer detected (for example, if you change to a freeway lane with no vehicles in front), the vehicle will accelerate to that new set vehicle speed. Change the set vehicle speed while briefly checking the value shown in the set vehicle speed display on the combination meter display.
- When the accelerator pedal is depressed with Adaptive Cruise Control on, automatic braking control and warnings by Adaptive Cruise Control will not occur. However, if there is a high risk of collision with an obstacle in front of the vehicle at this time, the warning and braking control of Pre-Collision Braking System may activate.

■Decreasing the set vehicle speed

●Using the RES/SET switch

- Push to the “SET/-” side briefly.
  Every time the switch is pushed, the set vehicle speed will decrease in decrements of 1 mph (1 km/h).
- Push to the “SET/-” side continuously.
  While the switch is being pushed, the set vehicle speed will decrease in decrements of 5 mph (5 km/h).

When operating the switch, the set vehicle speed changes on the combination meter display.

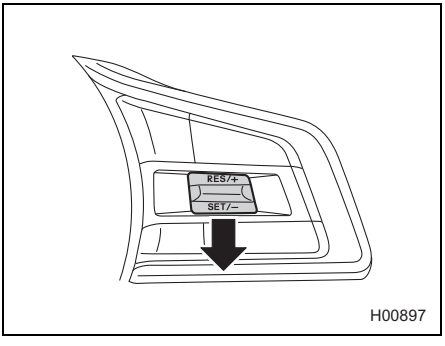

●Using the brake pedal

1. Depress the brake pedal to decrease the vehicle speed.
   Adaptive Cruise Control will be canceled and (Adaptive Cruise Control indicator) changes from green to white.
2. When the desired speed is reached, press the RES/SET switch to the “SET/-” side.
   The speed at the time of pressing the switch will be set as the new set vehicle speed, and it appears on the combination meter display.

■Accelerating temporarily

Depress the accelerator pedal to accelerate temporarily.
When the accelerator pedal is released, the vehicle returns to the set vehicle speed.
When the driver accelerates the vehicle by depressing the accelerator pedal while Adaptive Cruise Control is operating, (Adaptive Cruise Control indicator) turns white. When the acceleration is completed, (Adaptive Cruise Control indicator) returns to green.

■Decelerating temporarily

Depress the brake pedal to decelerate temporarily. When the brake pedal is depressed, Adaptive Cruise Control will be canceled. (Adaptive Cruise Control indicator) changes from green to white while the set vehicle speed remains displayed on the combination meter display.
Release the brake pedal and press the RES/SET switch to the “RES/+” side to restore the set vehicle speed.

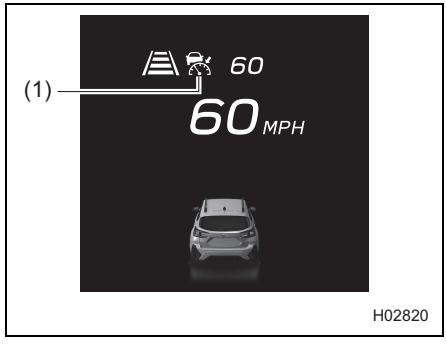

(1) White

CAUTION

When following another vehicle while using Adaptive Cruise Control, your vehicle will accelerate or slow down based on the speed of the lead vehicle.
However, the driver always remains responsible for safe driving and should not rely too much on the system.
If you need to accelerate (for example, to make a lane change) or slow down (for example, because the lead vehicle suddenly slows down or another vehicle cuts into your path), then operate either the accelerator or the brake pedal as appropriate based on surrounding conditions.

■Changing the following distance from the vehicle in front

The following distance from the vehicle in front setting can be changed in 4 stages.

: When the switch (▲ side) is pressed, the following distance will be longer.

: When the switch (▼ side) is pressed, the following distance will be shorter.

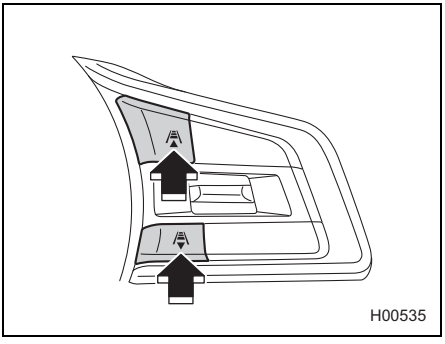

NOTE

- The following distance changes corresponding with the vehicle speed. The faster the vehicle travels, the greater the following distance.

Approximate guide to following distances

Following distance indicator	When your vehicle speed is 25 mph (40 km/h)	When your vehicle speed is 60 mph (100 km/h)
	Approx. 100 ft (30 m)	Approx. 200 ft (60 m)
	Approx. 80 ft (25 m)	Approx. 160 ft (50 m)
	Approx. 65 ft (20 m)	Approx. 130 ft (40 m)
	Approx. 50 ft (15 m)	Approx. 100 ft (30 m)

- The following distance previously set is restored when you turn back on Adaptive Cruise Control by pressing the (CRUISE) switch.

■ Stay-stopped function

If the vehicle in front comes to a stop while you are utilizing Adaptive Cruise Control, your vehicle will also come to a stop and will stay stopped.
Once your vehicle has come to a complete stop with the vehicle in front, Adaptive Cruise Control is paused and the stay-stopped function is engaged. When (Adaptive Cruise Control indicator) changes from green to white, HOLD (HOLD indicator) and READY (READY indicator) will be displayed.

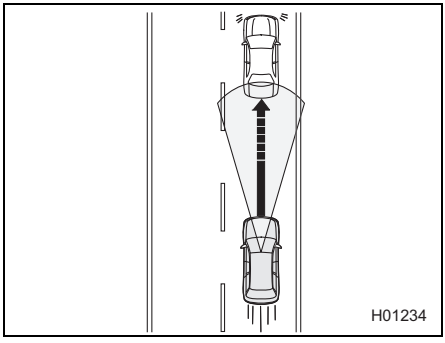

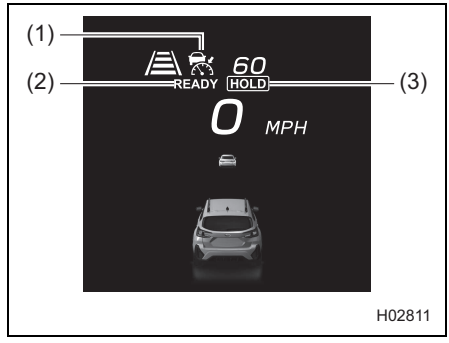

(1) White
(2) READY indicator
(3) HOLD indicator

Regardless of whether or not there is a vehicle in front, if the brake pedal is strongly depressed while the vehicle is stopped, READY (READY indicator) illuminates. Operating the RES/+ switch or SET/- switch at this time activates the stay-stopped function.
When starting the stay-stopped function, HOLD (HOLD indicator) illuminates and READY (READY indicator) turns off. READY (READY indicator) will illuminate again by releasing the brake pedal.

CAUTION

Approximately 3 seconds are required from when the vehicle stops until the stay-stopped function activates. Because there is the possibility that the vehicle may start moving before the stay-stopped function activates, pay attention to the surroundings and depress the brake pedal as necessary.

NOTE

If you depress the brake pedal softly, the stay-stopped function may not start. In this case, READY (READY indicator) will not illuminate.

●Resuming Adaptive Cruise Control in stay-stopped status

▼Setting using the RES/SET switch

Even when the vehicle in front remains stopped, Adaptive Cruise Control can be activated by operating the RES/+ switch or SET/- switch. HOLD (HOLD indicator) and READY (READY indicator) turn off, and (Adaptive Cruise Control indicator) changes from white to green.

- Press the SET/- switch. The speed is automatically set to 20 mph (30 km/h).
- Press the RES/+ switch. The vehicle speed that was set before the stay-stopped function activated is set again.

⇒ Page 92

NOTE

When Adaptive Cruise Control is resumed from stay-stopped status and the vehicle in front accelerates, your vehicle will also accelerate and continue to follow the vehicle in front at the previously set following distance. However, if the lead vehicle does not start moving or pauses, stay-stopped status will be automatically restored after approximately 3 seconds.

▼Setting with the accelerator pedal

Depressing the accelerator pedal while stay-stopped is engaged cancels stay-stopped status. At this time, Adaptive Cruise Control is resumed. The vehicle will attempt to travel at the previously set vehicle speed unless a lead vehicle is detected. If a lead vehicle is detected, Adaptive Cruise Control will maintain the previous following distance setting.

WARNING

When the stay-stopped function is canceled, the vehicle will start. Make sure the surroundings are safe before canceling the stay-stopped function.

NOTE

If the accelerator pedal is only slightly depressed, the stay-stopped function may not be canceled, and Adaptive Cruise Control may not be resumed.

●Canceling the stay-stopped function

If any of the following operations are performed while the vehicle is in the stay-stopped function (⇒ page 85), the stay-stopped function will be canceled and Adaptive Cruise Control will be canceled at the same time.

- The brake pedal is depressed.
- The (CRUISE) switch is pressed.
- The electronic parking brake switch is operated to manually apply the electronic parking brake.

WARNING

- When the stay-stopped function is canceled by pressing the (CRUISE) switch, the vehicle will start to creep. Depress the brake pedal as necessary.
- Do not exit the vehicle while the stay-stopped function is engaged.
- The stay-stopped function is not a replacement for applying the electronic parking brake. When parking, always apply brakes manually to come to a full stop, then set the electronic parking brake.
- When you exit the vehicle, apply the electronic parking brake, shift the select lever to the “P” position and turn the ignition switch to the OFF position.

CAUTION

The stay-stopped function will be canceled under the following conditions:

- The vehicle is in stay-stopped mode for approximately 10 minutes or more. A notification will sound 5 intermittent beeps, 1 short beep and 1 long beep.
- Any condition in which automatic cancellation is met. A notification sounds 1 short beep and 1 long beep.

⇒ Page 90

After the stay-stopped function has been canceled, the electronic parking brake will be automatically applied and the electronic parking brake indicator light will illuminate. However, if any canceling condition for the electronic parking brake (i.e. the interlock system with the accelerator pedal, switch operation of the electronic parking brake, etc.) is fulfilled, the electronic parking brake will not work. For details, refer to the vehicle Owner’s Manual.

If the accelerator pedal is only slightly depressed while the stay-stopped function is activated, the stay-stopped function may be canceled, and the electronic parking brake may not work.

●Setting Adaptive Cruise Control while the electronic parking brake is applied

If the electronic parking brake is applied before setting Adaptive Cruise Control, release the electronic parking brake by depressing the accelerator pedal or by other specified means. For details of how to release the electronic parking brake, refer to the vehicle Owner’s Manual.

■Canceling Adaptive Cruise Control

●Canceling by driver operation

Any of the following operations will cancel Adaptive Cruise Control.

(Adaptive Cruise Control indicator) changes from green to white while the set vehicle speed remains displayed on the combination meter display.

- Depress the brake pedal.

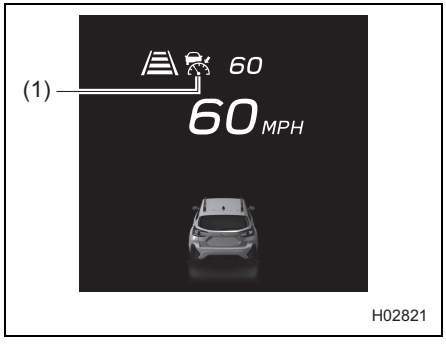

(1) White

- Press the (CRUISE) switch.

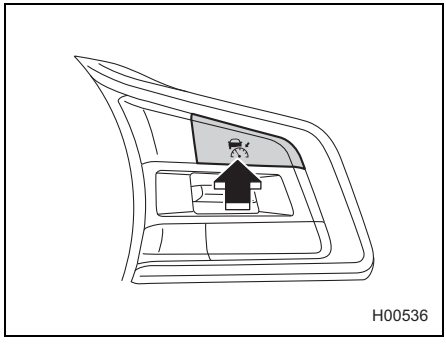

●Automatic cancellation by the system

Under the following conditions, a notification sounds 1 short beep and 1 long beep, and Adaptive Cruise Control is automatically canceled. (Adaptive Cruise Control indicator) changes from green to white. Also, an interruption screen is displayed on the combination meter display. If the stay-stopped function is engaged (⇒ page 85), the electronic parking brake will be automatically applied.

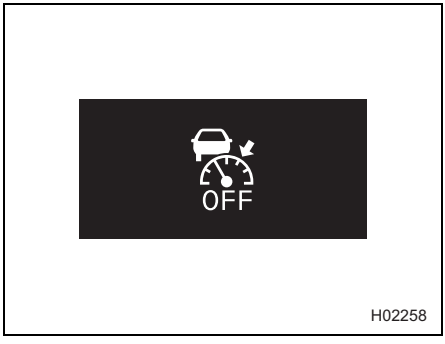

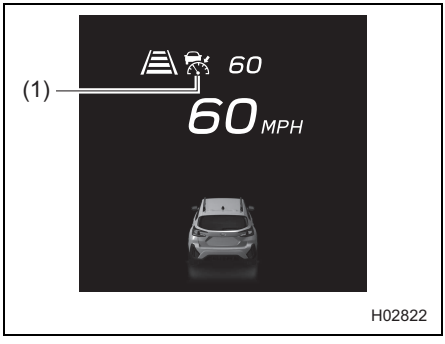

(1) White

- The grade of the road is very steep.
- Vehicle Dynamics Control or Traction Control Function is activated.
- The vehicle speed has exceeded approximately 100 mph (160 km/h) while cruise control is activated.
- The steering wheel is turned significantly in either direction.
- The select lever is moved to a position other than “D” or “M”.
- Gear “1”, “2” or “3” has been selected with the shift paddles.
- Any door (except the rear gate) is opened.
- The driver’s seatbelt is unfastened.
- The electronic parking brake is applied manually.
- The X-MODE is turned on (the X-MODE indicator illuminates).
- The accelerator pedal was depressed continuously for a long time.
- The engine speed increased to a high rpm.
- The EyeSight system has a malfunction. (EyeSight warning indicator: Yellow)
  ⇒ Page 187
- The EyeSight system has stopped temporarily. (EyeSight temporary stop indicator: White)
  ⇒ Page 189
- The Pre-Collision secondary braking is activated.

After the conditions have been resolved, perform the Adaptive Cruise Control set operation again to reactivate Adaptive Cruise Control.

WARNING

Do not use Adaptive Cruise Control on slippery roads. Doing so may result in an accident.

CAUTION

- When the select lever is shifted to the “N” position, Adaptive Cruise Control will be automatically canceled. Do not shift the select lever to the “N” position except in an emergency. Otherwise, engine braking will not be effective, which could cause an accident.
- If Adaptive Cruise Control is canceled automatically by the system right after the vehicle stops (in approximately 1 second), the electronic parking brake will not operate.
  ⇒ Page 85

NOTE

- If EyeSight is malfunctioning, (EyeSight warning indicator: Yellow) is displayed on the combination meter display. If this occurs, stop the vehicle in a safe location and then turn off the hybrid system and restart it. If the indicator remains illuminated after restarting the hybrid system, Adaptive Cruise Control cannot be used. This will not interfere with ordinary driving. However, contact a SUBARU dealer and have the system inspected.
  ⇒ Page 187
- If the EyeSight operation has temporarily stopped, (EyeSight temporary stop indicator: White) is displayed on the combination meter display.
  ⇒ Page 189
- When the operation of Adaptive Cruise Control has been automatically canceled, perform the Adaptive Cruise Control setting operation again after the condition that caused the cancellation has been corrected. If Adaptive Cruise Control cannot be activated even after the condition has been corrected, EyeSight may be malfunctioning. This will not interfere with ordinary driving. However, contact a SUBARU dealer and have the system inspected.

■Restoring the previously set vehicle speed

The previously set vehicle speed is stored in memory. To restore that vehicle speed, press the RES/SET switch to the “RES/+” side. (Adaptive Cruise Control indicator) changes from white to green.

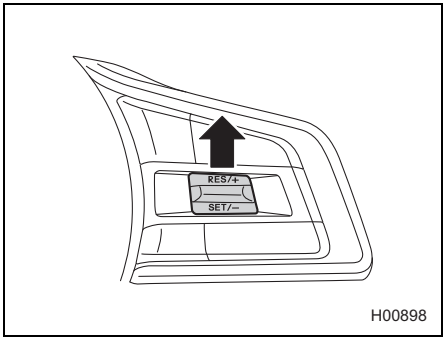

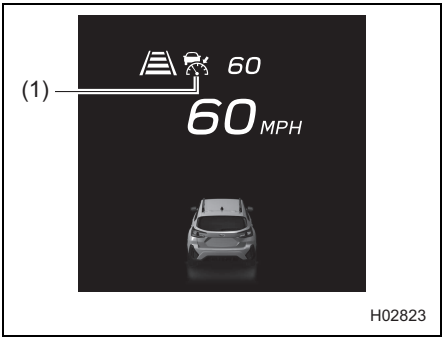

(1) Green

NOTE

- The vehicle speed stored in memory is erased in the following circumstances:
  - The cruise control is turned off by pressing the (CRUISE) switch.
  - The cruise control mode was switched from Adaptive Cruise Control to Conventional Cruise Control.
- If there is no vehicle speed stored in the memory (previous vehicle speed), the current vehicle speed is set when the RES/SET switch is pressed to the “RES/+” side.
  ⇒ Page 75

■ Turning off Adaptive Cruise Control

When Adaptive Cruise Control is not active, press the (CRUISE) switch.

(Adaptive Cruise Control indicator), your vehicle indicator and the following distance setting indicator turn off on the combination meter display.

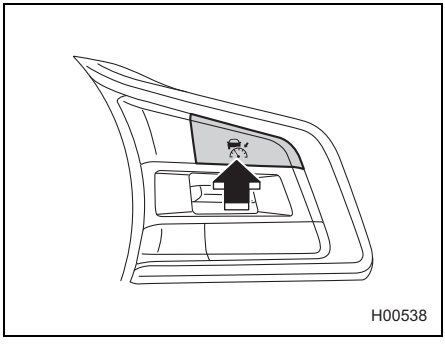

Other functions

■“Obstacle Detected” warning

The “Obstacle Detected” warning is activated while Adaptive Cruise Control is following a lead vehicle. This function warns the driver when it determines that the current level of deceleration by automatic braking control is insufficient.

- When the system determines that the vehicle speed needs to be reduced manually by the driver, an alert sounds repeated short beeps and an interruption screen is displayed.
- When this function activates, depress the brake pedal to decelerate and maintain an optimal following distance.



H02731

WARNING

- If the alert/notification sounds frequently, do not use Adaptive Cruise Control.
- The “Obstacle Detected” warning will not activate in the following situations.
  - The accelerator pedal is depressed.
  - The brake pedal is depressed.
- Even when the following distance is short, the “Obstacle Detected” warning may not activate in the following situations.
  - The difference in speed with the vehicle in front is small. The two vehicles are traveling at almost the same speed.
  - The vehicle in front is traveling faster than your vehicle. The following distance is gradually increasing.
  - Another vehicle cuts into your lane very close to your vehicle.
  - The vehicle in front decelerates suddenly.
  - There are repeated uphill and downhill grades.
- The “Obstacle Detected” warning may not activate in time in the case of a vehicle that is stopped at the end of a line at a toll gate, at a stop light or intersection or in traffic congestion, or a vehicle that is moving much slower than your vehicle. EyeSight requires a speed differential in order to recognize a potential obstacle and react to it.

NOTE

Vehicles in front in the same traffic lane are detected by the stereo camera within a distance of approximately 426 ft (130 m) in the forward direction. However the detection distance may be reduced depending on the traffic environment, driving conditions, and conditions of the vehicle in front.

Lane Centering Function

The stereo camera detects lane markings (including Botts' dots) of the lane and the lead vehicle and the system assists the steering operation by working with the electric power steering to help keep your vehicle in its lane when driving on an expressway, freeway or interstate highway.

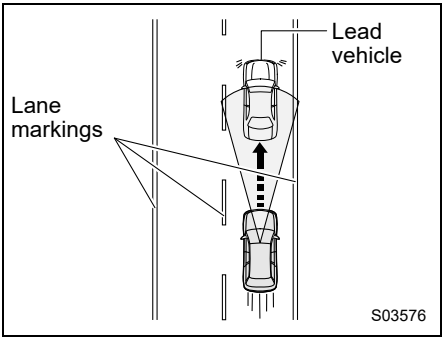

This function can be used when Adaptive Cruise Control is activated.
⇒ Page 75
When driving at speeds of 0 mph (0 km/h) to approximately 90 mph (145 km/h), the system detects the lane markings and/or the lead vehicle and assists the driver with steering control in order to help keep the vehicle close to the center of the lane and follow the lead vehicle.

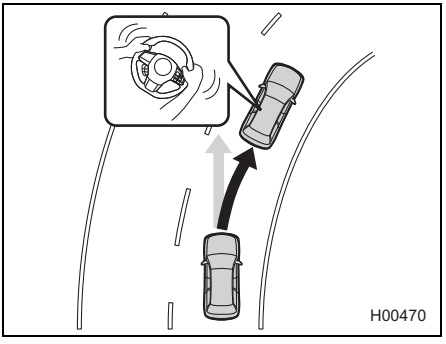

WARNING

Lane Centering Function is not an automatic driving system.
Do not overestimate the capabilities of Lane Centering Function. It is not a system to assist inattentive driving or meant to permit driving without holding the steering wheel. Make sure to grip the steering wheel while driving. To drive safely, check the distance from the vehicle in front or from a vehicle driving in parallel with your vehicle, the surrounding conditions and the surrounding environment while driving.

If you feel that the level of control and timing by the system are different from your own driving style, the system may not support safe driving. Do not use Lane Centering Function.
Lane Centering Function does not always operate under all situations. If you rely only on Lane Centering Function to stay in a lane, it may cause an accident such as a collision with an obstacle beside your lane or with a vehicle driving in a neighboring lane.

- Check that there are no problems with the tires and brakes during a daily inspection before using the system.
  ⇒ Refer to “Warranty and Maintenance Booklet”.
- The system may not operate properly under the following conditions. Do not use Lane Centering Function.
  - The air pressure of tires is not to specification.*1
  - Tires that are unevenly worn or tires with uneven wear patterns are installed.*1
  - Tires that are the wrong size are installed.*1
  - The wheels are out of balance (e.g., the balance weight is removed or misaligned).*1
  - The wheels are out of alignment.*1
  - A flat tire has been fixed temporarily with a tire repair kit.
  - The suspension has been modified (including genuine SUBARU parts).
  - An object that obstructs the stereo camera’s view is installed on the vehicle.
  - Tire chains are installed.
  - There is an abnormal vibration in the steering wheel or the steering wheel is heavier than usual.
  - The steering wheel has been replaced with parts other than genuine SUBARU parts.

Continued on next page ⇒

⇒ Continued from previous page

- The headlights are dirty or they have snow, ice or dirt on them. (Objects are not adequately illuminated and are difficult to detect.)
- The headlights are not aligned correctly. (Objects are not adequately illuminated and are difficult to detect.)
- The headlights, fog lights and other lights have been modified.
- Vehicle operation has become unstable due to an accident or malfunction.
- The brake system warning light is illuminated.*2
- The vehicle is tilted at an extreme angle due to loaded cargo or other factors.
- The maximum number of occupants is exceeded.
- A trailer or another vehicle, etc. is being towed.
- The combination meter is not operating properly. For example, an indicator light or a warning light on the combination meter does not properly turn on or off, a beep does not sound, or the indication on the combination meter display is different from when it is normal.*3

*1: The wheels and tires have functions that are critically important. Be sure to use the correct ones.
For details, refer to the vehicle Owner's Manual.

*2: If the brake system warning light does not turn off, immediately pull the vehicle over in a safe place and contact a SUBARU dealer to have the system inspected. For details, refer to the vehicle Owner's Manual.

*3: For details about the functions and operations of the combination meter, refer to the vehicle Owner's Manual.

- Lane Centering Function is designed for use on expressways, freeways, toll roads, interstate highways and similar limited access roads. It is not intended to be used in city traffic. In the following conditions, do not use Lane Centering Function. Doing so may result in an accident.
  - Ordinary roads (roads other than those mentioned above)
    Depending on the driving environment (complexity of roads and other factors), the system may not be able to perform as the traffic conditions require, and that may result in an accident.
  - Roads with sharp curves
  - Roads with lane restrictions or tentative lanes due to construction work, etc.
  - Old lane markings remain.
  - Avoiding parked vehicles
  - Snow, puddles or snow melting agents remain on the road surface.
  - Cracks or constructed traces remain on the road surface.
  - Frozen roads, snow-covered roads or other slippery road surfaces
    The tires may spin, causing loss of control of the vehicle.

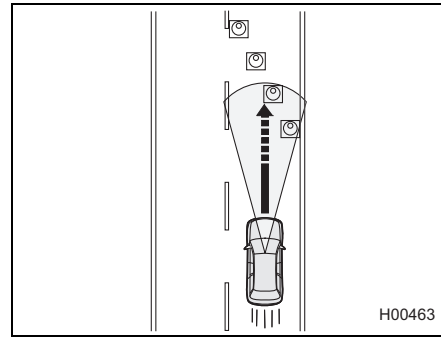

  - Entering a sharp curve into an interchange or junction, or a service area, parking area, toll booth or other facilities
  - Visibility is poor due to sand, smoke or water vapor blowing in the wind, or the front vision is obscured due to water splashes, snow, dirt or dust stir up generated by the vehicle in front or oncoming traffic.
  - The stereo camera's field of view is obstructed by fogging, snow, dirt, frost, dust, scratches, or smears on the windshield, or by light reflecting off the dirt, etc.
  - Rain or dirt has not been fully wiped off of the windshield. There is a risk of that the stereo camera may not detect the lanes.
  - The stereo camera's field of view is obstructed (for example by a canoe on the roof of the vehicle).

Continued on next page ⇒

⇒ Continued from previous page

- The stereo camera may have difficulty detecting the lane markings under the following conditions and the system may not operate properly.
  - At night or in a tunnel without the headlights on
  - In bad weather (for example, rain, snow or thick fog)
  - The road surface is wet and shining by reflected light.
  - There are other traffic markings on the lane you are driving in (arrows, words, etc.).
  - The distance between your vehicle and the vehicle in front is short, making it difficult to detect lane markings.
  - A vehicle intruded from a neighboring lane or the vehicle in front changed lanes.
  - The shape of a curve in the road suddenly changes.
  - Shadows of guardrails or similar objects are overlapped on the lane markings.
  - Strong light is coming from the front (sunlight or headlight beams of oncoming traffic, etc.).
  - The width of a lane is either too narrow or too wide.
  - The width of a lane has changed.

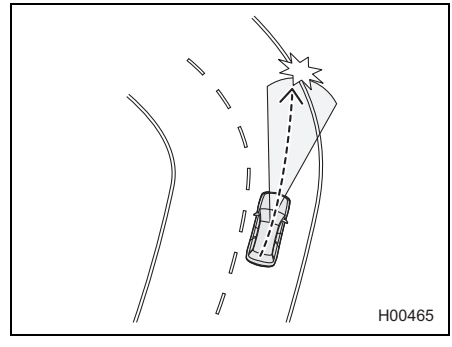

  - The stereo camera may have difficulty detecting the lane due to the performance of the camera.
    - There are no lane markings or they are very worn.
    - The lane markings are painted in yellow.
    - The lane markings are similar in color to the road surface.
    - The lane markings are drawn in double.
    - The width of lane markings is narrow.
    - Lines that are not lane markings are painted on roads.
    - The lane markings are touching the walls and poles.

- The shape of lane markings suddenly changes (entrance/exit of a curve, crank and winding road, etc.).

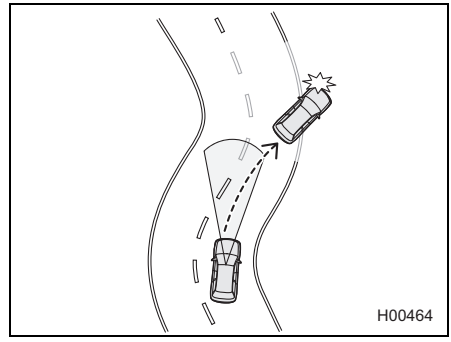

- Going into lanes that lead to interchanges, junctions, service areas or parking areas
- There is a curb or a side wall on the road shoulder.
- The brightness changes such as at a tunnel entrance or exit or when you drive under an overpass.
- Fluid has not been fully wiped off the windshield during or after washer use.

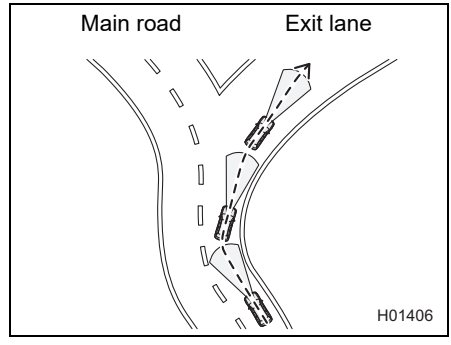

- Under the conditions below, the stereo cameras may have difficulty in detecting the vehicle in front, and Lane Centering Function may not operate as expected.
  In addition, depending on the behavior of the vehicle in front and the surrounding traffic conditions, there is the risk of an unexpected accident (for example, a collision with a vehicle in the neighboring lane or a guardrail).

Continued on next page ⇒

⇒ Continued from previous page

- The vehicle in front changes lanes, turns left or right, or takes similar action.
- The vehicle in front is drifting.

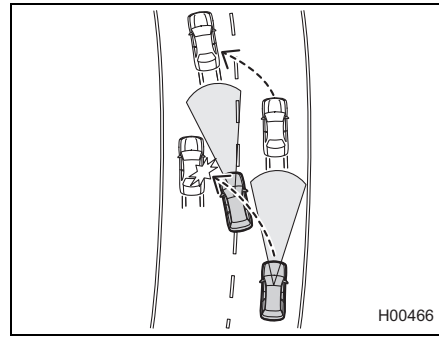

- The vehicle in front is not driving in the center of the lane and is driving with wheels on or over either side of the lane markings or at the edge of the lane.

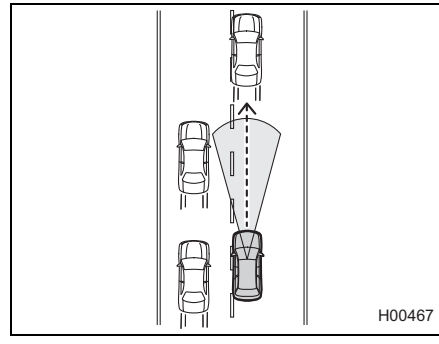

- The behavior of the vehicle in front changes suddenly (such as at the start or end of a curve or on a road with continuous curves and corners).

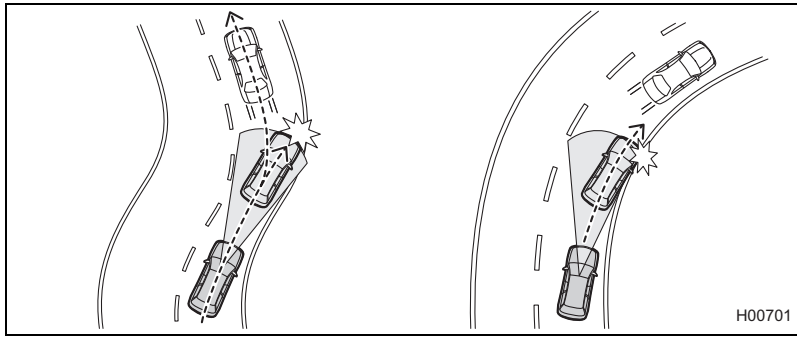

- The vehicle in front moves to avoid a vehicle stopped on the shoulder on the road or an obstacle in the road.
- Your vehicle is passing a vehicle in your lane or that is close to the lane marking (motorcycle or other similar vehicle).
- There is a motorcycle or similar vehicle traveling next to or passing the vehicle in front.
- Another vehicle cuts between the vehicle in front and your vehicle.
- The vehicle in front is operating a turn signal, hazard warning flashers, or similar light.
- At night or in a tunnel without the headlights on
- Driving at night or in a tunnel when there is a vehicle in front that does not have its taillights on

• Lane Centering Function may be unable to continue operating when the vehicle in front has a unique shape or due to the surrounding environment.
- The rear aspect of the vehicle in front is low, small or irregular (the system may recognize another part of the vehicle as its rear and will determine operation from that).
  • There is an empty truck or trailer with no rear and/or side panels on the cargo bed.
  • Vehicles that have cargo protruding from their back ends
  • Non-standard shaped vehicles (vehicle transporters or vehicles with a sidecar fitted, etc.)
  • The height of the vehicle is low, etc.
- The vehicle in front is a compact car, motorcycle, or other narrow vehicle.
- The relative speed difference compared to the vehicle in front is large. (The vehicle in front pulls away.)
- Bad weather (for example heavy rain, a blizzard or thick fog)
- There is sunlight, headlights, or other light reflecting from the rear of the vehicle in front.
- Strong light is coming from the front (for example, sunlight at dawn, sunset or headlight beams, etc.).
- The brightness changes such as at a tunnel entrance or exit or when you drive under an overpass.
- Fluid has not been fully wiped off the windshield during or after washer use.

CAUTION

- The performance of Lane Centering Function may not be optimal under the following conditions. In addition, Lane Centering Function may not operate or the operation may be canceled.
  - Immediately after the weight of your vehicle changes radically
  - Immediately after the replacement of a tire or the adjustment of tire pressure
  - Immediately after the adjustment, repair or replacement of the camera or related components
  - Immediately after the repair or replacement of the suspension or steering system
  - A winter tire or a tire other than a genuine SUBARU tire is used.
  - The vehicle is in a crosswind.
  - The road grade abruptly changes (uphill or downhill).
  - The grade of the crossing direction in a road is large or changes abruptly.
  - Unevenness, winding and joint of a road surface
  - The acceleration/deceleration is high.
  - Immediately after starting the hybrid system when the outside temperature is low.
  - The outside temperature is high.
- When you do not use Lane Centering Function, be sure to turn it off. If the function is left on, the function may operate unexpectedly, causing an accident.
  ⇒ Page 113
- If you turn on the {(Lane Centering) switch, the operation power of electric power steering may change.

How to use Lane Centering Function

Press the (Lane Centering) switch when Adaptive Cruise Control is on.
⇒ Page 75
Lane Centering Function is turned on, and / (Lane Centering indicator) (white) and the lane indicator (gray) are displayed on the combination meter display.

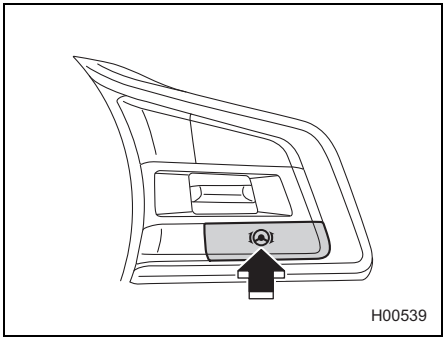

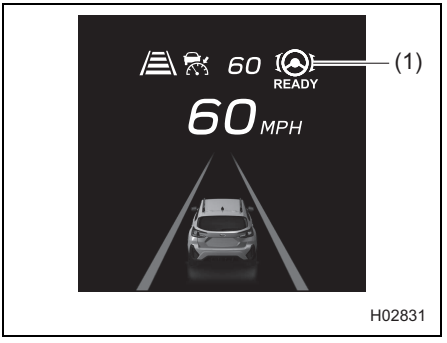

(1) Lane Centering indicator (white)

Lane Centering Function starts operating when all of the following conditions are met.
- Adaptive Cruise Control is activated.
- Pre-Collision Braking System is on.
- The vehicle speed is between 0 mph (0 km/h) and approximately 90 mph (145 km/h).
- The system is detecting the lane markings or the lead vehicle.
- The driver is operating the steering wheel.
- On a straight road or gentle curve
- On a road that has a lane width that is between approximately 10 ft (3 m) and 15 ft (4.5 m)
- Driving near the center of a lane
- Driver Monitoring System operation indicator light (green) or Driver Monitoring System OFF indicator light illuminates. (models with Driver Monitoring System)
- The driver’s eyes are on the road. (models with Driver Monitoring System)

While the function is operating,  (Lane Centering indicator) on the combination meter display changes from white to green. At this time, if lane markings have been detected, the lane indicator illuminates in white.

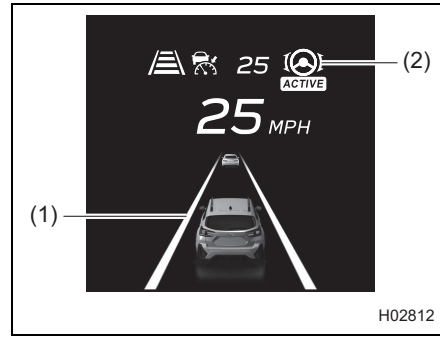

(1) Lane indicator (white)
(2) Green

WARNING

When Lane Centering Function is operating and the lane markings are not detected, steering operation will occur automatically to track the vehicle in front when the vehicle in front changes lanes or performs similar movement. Always be aware of surrounding vehicles and obstacles, and operate the steering wheel as necessary. Relying on Lane Centering Function for steering operation could lead to an accident, resulting in serious injury or death.

CAUTION

If you grip the steering wheel firmly, the system may determine that you are operating the steering wheel and reduce the level of assistance.

NOTE

- Depending on the lane detection status, the lane indicator may turn white on one side (left or right) only.
- The lane indicator does not turn white if the function does not detect the lane markings and the vehicle is controlled by following the lead vehicle.
- The on/off status of Lane Centering Function is restored when you restart the hybrid system.
- For models with Driver Monitoring System, even if Driver Monitoring System is turned off, Lane Centering Function uses information from Driver Monitoring System.
  For details about Driver Monitoring System, refer to the vehicle Owner's Manual.
- For models with Driver Monitoring System, Lane Centering Function may not operate because Driver Monitoring System cannot detect driver's state, has a malfunction or has stopped temporarily.
  For details about Driver Monitoring System, refer to the vehicle Owner's Manual.

■Canceling Lane Centering Function

●Canceling by driver operation

Any of the following operations temporarily cancels Lane Centering Function.
While temporarily canceling this function, / (Lane Centering indicator) on the combination meter display illuminates in white.

- Depressing the brake pedal
- Pressing the (CRUISE) switch to cancel Adaptive Cruise Control
- Operating the turn signal lever

●Automatic cancellation by the system

Under the following conditions, a notification sounds 1 short beep and 1 long beep, and Lane Centering Function is temporarily canceled.

While the function is temporarily canceled, / (Lane Centering indicator) on the combination meter display illuminates in white. Also, an interruption screen is displayed on the combination meter display.



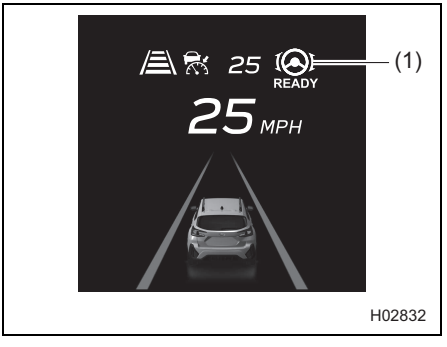

(1) White

- The system does not detect the lane markings and the lead vehicle.
- Adaptive Cruise Control is automatically canceled.
- The system judges that the driver operated the steering wheel in order to leave the lane.
- The steering wheel is operated aggressively.
- Entering a sharp curve
- On a sharp curve
- Due to another system operating

- The driver operate the steering wheel forcefully during an alert sounds under the following conditions. (models with Driver Monitoring System)
  - Driver Monitoring System detects driver inattention or that the driver has fallen asleep.
  - Driver Monitoring System has a malfunction or has stopped temporarily.
  - Driver Monitoring System does not detect the driver's state for a certain period of time.



- The EyeSight system has a malfunction. (EyeSight warning indicator: Yellow)
  ⇒ Page 187
- The EyeSight system has stopped temporarily. (EyeSight temporary stop indicator: White)
  ⇒ Page 189

- The system does not detect steering operation by the driver for a certain period of time.
  - When the system detects no steering operation, an interruption screen is displayed on the combination meter display. If this condition continues, an alert sounds and warning screens are displayed in stages.

Models without Driver Monitoring System



H02380

Models with Driver Monitoring System



H02368

  - If the system still cannot detect steering operation or steering operation while the driver's eyes are on the road, the following warning screen is displayed, and Emergency Stop Assist activates.
    ⇒ Page 115

Models without Driver Monitoring System



H02381

Models with Driver Monitoring System



H02404

- The driver's seatbelt is unfastened.
  - The warning screen is displayed on the combination meter display after the driver's seatbelt is unfastened.

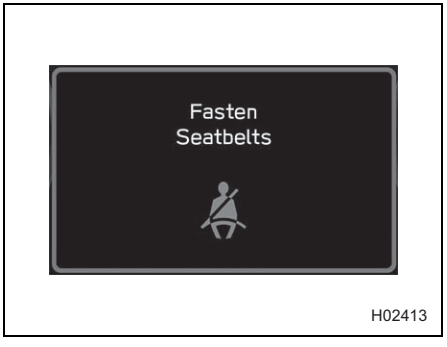

  - If the system is still unable to detect the driver's seatbelt is fastened, Emergency Stop Assist activates.
    ⇒ Page 115

Models without Driver Monitoring System



Models with Driver Monitoring System



- Driver Monitoring System (if equipped) determines that the driver is incapacitated.
  - If Driver Monitoring System (if equipped) determines that the driver is incapacitated, an alert sounds and an interruption screen is displayed on the combination meter display.



H02369

  - If the system is still unable to detect steering operation while the driver's eyes are on the road, the following warning screen is displayed, and Emergency Stop Assist activates.
    ⇒ Page 115



H02406

NOTE

- In the following cases, Emergency Stop Assist may activate because the system cannot detect steering wheel operation by the driver.
  - The driver is driving with hands placed lightly on the steering wheel.
  - Driver steering operation is insufficient.
- For models with Driver Monitoring System, Emergency Stop Assist may activate because Driver Monitoring System cannot detect driver's state, has a malfunction or has stopped temporarily.
  For details about Driver Monitoring System, refer to the vehicle Owner's Manual.

■Turning off Lane Centering Function

Press the (Lane Centering) switch. / (Lane Centering indicator) and the lane indicator turn off on the combination meter display.

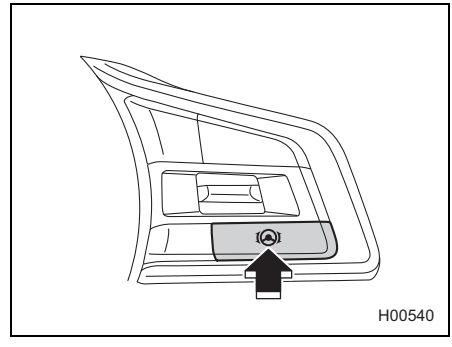

■When Lane Centering Function is active and the vehicle is likely to depart the lane

When Lane Centering Function is active and the vehicle is likely to depart the lane, an alert sounds 3 short beeps and an interruption screen is displayed on the combination meter display.
When this warning activates, operate the steering wheel so that the vehicle does not depart the lane.

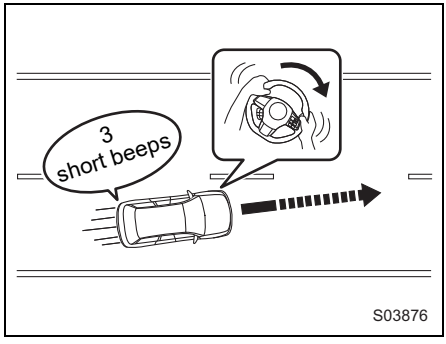



*: The illustration depicts a vehicle crossing the left line.

If Lane Centering Function is canceled while this warning is activated, the interruption screen will change. At this time, / (Lane Centering indicator) changes from green to white.



H02384

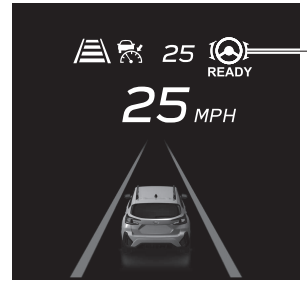

H02833

(1) White

WARNING

When Lane Centering Function is operating, and the lane markings are not detected, this warning and Lane Departure Warning (⇒ page 159) do not operate. Pay attention to your surroundings and operate the steering wheel as necessary. Relying only on this warning to judge lane departure will lead to an unexpected accident.

NOTE

This function operates even when Lane Departure Warning is turned off.
⇒ Page 163

Emergency Stop Assist

This driving support system is intended to reduce the risk of accidents in the event that the driver can no longer operate the vehicle, for example due to a medical emergency. If the system determines that the driver is incapacitated based on steering operation, or the Driver Monitoring System (if equipped), etc., it slows down and then stops the vehicle in the driving lane. While Lane Centering Function is operating, if the system does not detect steering operation or the driver's state for a certain period of time, or if it detects driver inattention, that the driver has fallen asleep or has unfastened the driver's seatbelt, sounds and warning screens are used to urge the driver to operate the steering wheel or to operate the steering wheel while keeping their eyes on the road. If the system still cannot detect steering operation or steering operation while the driver's eyes are on the road, it determines that the driver is incapacitated and slows down and then stops the vehicle in the driving lane while continuing to urge the driver to operate the steering wheel or to operate the steering wheel while keeping their eyes on the road. After the vehicle has stopped, the hazard warning flashers are used to alert trailing and surrounding vehicles of the emergency situation, and all doors (including the rear gate) are automatically unlocked.
The system also makes an emergency call after the vehicle has stopped.
⇒ Refer to the Owner's Manual supplement for "MySubaru Connected Services".

⚠ WARNING

Emergency Stop Assist is not an automatic driving system. Drivers are responsible for driving safely. Responsibility for the operation of Emergency Stop Assist rests with the driver.

- Do not rely excessively on Emergency Stop Assist. This system is not designed for hands-free driving or inattentive driving, and it is not a system for driving automatically when you are feeling unwell. If the system urges you to operate the steering wheel or to operate the steering wheel and keep your eyes on the road, operate the steering wheel immediately keeping your eyes on the road.
- If you recover after Emergency Stop Assist has activated, check the safety of your vehicle and your surroundings, and then either resume driving or evacuate to a safe location. When stopping or getting out of the vehicle, always apply the electronic parking brake, and shift the select lever to the "P" position.

Continued on next page ⇒

⇒ Continued from previous page

- If, for example, you are leaning on the steering wheel while incapacitated, the system may not be able to determine that you are incapacitated and cannot activate.
- This system determines whether you are incapacitated based on factors such as whether you are operating the steering wheel and with the Driver Monitoring System (if equipped). If you intentionally do not operate the steering wheel, close your eyes or hide part of your face even when you are not incapacitated, the system will still activate. If the system urges you to operate the steering wheel or to operate the steering wheel and keep your eyes on the road, operate the steering wheel immediately keeping your eyes on the road.
- Do not intentionally activate Emergency Stop Assist. Doing so may result in an unexpected accident. Also, do not drive if you are feeling unwell.

CAUTION

- If the system determines that you are on a curve, it continues to control the vehicle without stopping.
- If the system cancels lane centering control, such as on a sharp curve, it may not be able to keep the vehicle in the lane and may depart the lane.
- If Lane Centering Function is canceled by the system before the system has determined that you are incapacitated, Emergency Stop Assist will not activate.
- If the system determines that it cannot continue deceleration and lane centering control, it may cancel these controls.
- The stereo camera may have difficulty detecting the lane markings under the following conditions, and the system may not be able to effectively slow down the vehicle or stay in the lane.
  - In bad weather (for example, rain, snow or thick fog)
- Pre-Collision Braking System takes precedence in situations where Emergency Stop Assist can also operate.

NOTE

For models with Driver Monitoring System, Emergency Stop Assist may activate because Driver Monitoring System cannot detect driver's state, has a malfunction or has stopped temporarily.
For details about Driver Monitoring System, refer to the vehicle Owner's Manual.

Emergency Stop Assist activates under any of the following conditions while Lane Centering Function is operating.

- The system continues not to detect any steering wheel operation, and the system has tried to urge the driver to operate the steering wheel or to operate the steering wheel while keeping their eyes on the road*.
- The driver's seatbelt was unfastened, and the system cannot detect that it has been fastened after urging the driver to fasten the driver's seatbelt, and the system is urging the driver to operate the steering wheel or to operate the steering wheel while keeping their eyes on the road*.
- The system continues to detect driver inattention or that the driver has fallen asleep, or continues not to be able to detect the driver's state, and the system is urging the driver to operate the steering wheel while keeping their eyes on the road*.

*: Alerts to operate the steering wheel while keeping eyes on the road are only for models with Driver Monitoring System.

⇒ Page 108

Lane Centering Function is operating.	Emergency Stop Assist		
	(1) - A (1) - B (1) - C	(2)	(3)
	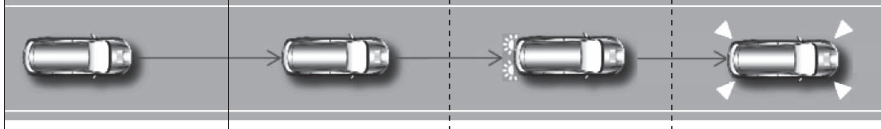		
	• Alert • Pulse braking* * Except for (1) - B • Coasting	• Deceleration • Pulse braking	• Stay stopped • Hazard warning flashers • All doors unlocked (including the rear gate) • Emergency call

H02119

NOTE

- Pulse braking is repeated braking over a short period of time with the intention of alerting the driver.
- Pulse braking activates if the vehicle speed is approximately 20 mph (30 km/h) or more.

(1) - A.

If the system cannot detect steering operation by the driver, it displays an alert urging the driver to operate the steering wheel or to operate the steering wheel while keeping their eyes on the road*.

The alert consists of an alert sound and a warning screen.

Several seconds after the alert starts, pulse braking is activated.

This stage operates as follows.

- Alert to operate the steering wheel or to operate the steering wheel while keeping your eyes on the road*
- Pulse braking
- Coasting

Meter display / Alert sound	Status	How to cancel
 or  H02445 1 beep and 1 long beep (repeated)	The system can keep the vehicle in the lane.	• Operate the steering wheel. • Press one of the following switches: (CRUISE) switch, (Lane Centering) switch
 H02385 1 short beep and 1 long beep (repeated)	The system can no longer keep the vehicle in the lane.	

*: Alerts to operate the steering wheel while keeping eyes on the road are only for models with Driver Monitoring System.

(1) - B.

If the system cannot detect steering operation by the driver after the driver unfastens the driver's seatbelt, the system urges the driver to fasten the driver's seatbelt, and then urges the driver to operate the steering wheel or to operate the steering wheel while keeping their eyes on the road*.

The alert consists of an alert sound and a warning screen.

This stage operates as follows.

- Alert to fasten the driver's seatbelt, and then an alert to operate the steering wheel or to operate the steering wheel while keeping your eyes on the road*
- Coasting

Meter display / Alert sound	Status	How to cancel
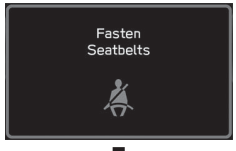  H02446 or 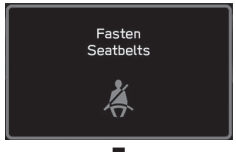  H02408 High tone beep and low tone beep (repeated) and then 1 beep and 1 long beep (repeated)	The system can keep the vehicle in the lane.	• Operate the steering wheel forcefully. • Press one of the following switches: (CRUISE) switch, (Lane Centering) switch

Meter display / Alert sound	Status	How to cancel
 H02414 High tone beep and low tone beep (repeated) and then 1 short beep and 1 long beep (repeated)	The system can no longer keep the vehicle in the lane.	• Operate the steering wheel forcefully. • Press one of the following switches: (CRUISE) switch, (Lane Centering) switch

*: Alerts to operate the steering wheel while keeping eyes on the road are only for models with Driver Monitoring System.

(1) - C.

If the system detects driver inattention or that the driver has fallen asleep, or if the system is unable to detect the driver's state, the system urges the driver to operate the steering wheel while keeping their eyes on the road*.

The alert consists of an alert sound and a warning screen.

Several seconds after the alert starts, pulse braking is activated.

This stage operates as follows.

- Alert to operate the steering wheel while keeping your eyes on the road*
- Pulse braking
- Coasting

Meter display / Alert sound	Status	How to cancel
 H02409 1 beep and 1 long beep (repeated)	The system can keep the vehicle in the lane.	• Operate the steering wheel forcefully. • Press one of the following switches: (CRUISE) switch, (Lane Centering) switch
 H02416 1 short beep and 1 long beep (repeated)	The system can no longer keep the vehicle in the lane.	

*: Alerts to operate the steering wheel while keeping eyes on the road are only for models with Driver Monitoring System.

(2)

If the system still does not detect any steering operation despite continuing the alert in stage-(1), it determines that the driver is incapacitated.

The system slows down and stops the vehicle and plays an alert sound and displays a warning screen.

This stage operates as follows.

- Deceleration
- Pulse braking

Meter display / Alert sound	Status	How to cancel
 H02388 1 beep and 1 long beep (repeated)	The system can keep the vehicle in the lane.	• Operate the steering wheel. • Operate the steering wheel forcefully.* • Press one of the following switches: (CRUISE) switch, (Lane Centering) switch
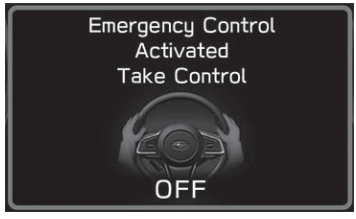 H02390 1 short beep and 1 long beep (repeated)	The system can no longer keep the vehicle in the lane.	

*: If the driver's seatbelt is unfastened, or the driver is looking away from the road (models with Driver Monitoring System).

NOTE

- If Emergency Stop Assist is canceled in stage-(2), the current speed will be set as the set vehicle speed for Adaptive Cruise Control.
- Depending on when Emergency Stop Assist is canceled, the following functions may not be available. In that case, the functions will become available when the hybrid system is restarted.
  - Adaptive Cruise Control
  - Lane Centering Function
  - Conventional Cruise Control

(3)

Once the vehicle has stopped, all doors (including the rear gate) are automatically unlocked, and the vehicle remains stopped.

Lane centering control is canceled, and the electronic parking brake is applied. An alert sound is played and a warning screen is displayed. The hazard warning flashers are used to alert trailing and surrounding vehicles of the emergency situation.

At the same time, Emergency Stop Assist makes an emergency call.

This stage operates as follows.

- Stay stopped
- Hazard warning flashers
- Electronic parking brake
- All doors unlocked (including the rear gate)
- Emergency call

Meter display / Alert sound	Status	How to cancel
  H02502 1 short beep and 1 long beep (repeated)	Lane centering control is canceled.	• Operate the steering wheel. • Operate the steering wheel forcefully.* • Press one of the following switches: (CRUISE) switch, (Lane Centering) switch

*: If the driver's seatbelt is unfastened, or the driver is looking away from the road (models with Driver Monitoring System).

NOTE

Deceleration and lane centering control will continue where possible, but they may be canceled depending on the situation. Even if deceleration or lane centering control is canceled, Emergency Stop Assist continues to play an alert sound and display a warning screen and to use the hazard warning flashers to alert trailing and surrounding vehicles of the emergency situation.

Screens when EyeSight stops temporarily while Emergency Stop Assist is operating

(1) - A. Alert to operate the steering wheel or to operate the steering wheel while keeping your eyes on the road*

(1) - B. Alert to fasten the driver's seatbelt, and then an alert to operate the steering wheel or to operate the steering wheel while keeping your eyes on the road*

(1) - C. Alert to operate the steering wheel while keeping your eyes on the road*

Meter display / Alert sound	Status
 H02394 1 short beep and 1 long beep (repeated)	Emergency Stop Assist continues to operate, but lane centering control is canceled.

*: Alerts to operate the steering wheel while keeping eyes on the road are only for models with Driver Monitoring System.

(2) Deceleration

Meter display / Alert sound	Status
 H02396 1 short beep and 1 long beep (repeated)	Emergency Stop Assist continues to operate, but lane centering control is canceled.

Screens when EyeSight has a malfunction while Emergency Stop Assist is operating

Meter display / Alert sound	Status
 H02398 1 short beep and 1 long beep (repeated)	Only the warning on the combination meter display continues to be displayed. Other control is canceled. (The hazard warning flashers continue if they were operating.)

Lane Departure Prevention Function

The system detects lane markings in order to help prevent departure from the lane. If you drive on an expressway, freeway or interstate highway at speeds above approximately 37 mph (60 km/h) and the vehicle is likely to depart the lane, the system assists the steering operation by turning it to the direction that will help prevent the lane departure.

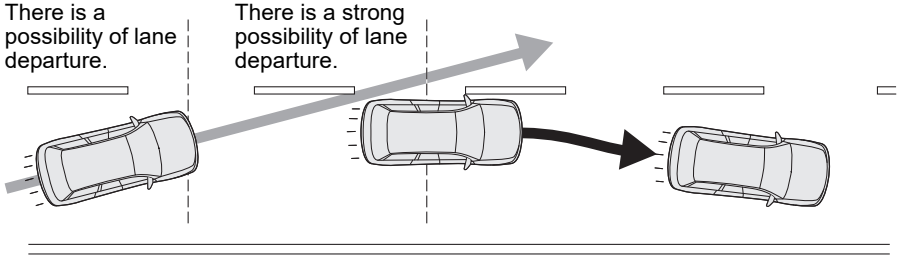

H01240

WARNING

Lane Departure Prevention Function is not an automatic driving system.

Do not overestimate the capabilities of Lane Departure Prevention Function. It is not a system to assist inattentive driving or meant to permit driving without holding the steering wheel. Make sure to grip the steering wheel while driving. To drive safely, check the distance from the vehicle in front or from a vehicle driving in parallel with your vehicle, the surrounding conditions and the surrounding environment while driving.

If you feel that the level of control and timing by the system are different from your own driving style, the system may not support safe driving. Do not use Lane Departure Prevention Function.

Lane Departure Prevention Function does not always operate under all situations. If you rely only on Lane Departure Prevention Function to stay in a lane, it may cause an accident such as a collision with an obstacle beside your lane or with a vehicle driving in a neighboring lane.

- Check that there are no problems with the tires and brakes during a daily inspection before using the system.
  ⇒ Refer to “Warranty and Maintenance Booklet”.

Continued on next page ⇒

⇒ Continued from previous page

- The system may not operate properly under the following conditions. Do not use Lane Departure Prevention Function.
  - The air pressure of tires is not to specification.*1
  - Tires that are unevenly worn or tires with uneven wear patterns are installed.*1
  - Tires that are the wrong size are installed.*1
  - The wheels are out of balance (e.g., the balance weight is removed or misaligned).*1
  - The wheels are out of alignment.*1
  - A flat tire has been fixed temporarily with a tire repair kit.
  - The suspension has been modified (including genuine SUBARU parts).
  - An object that obstructs the stereo camera's view is installed on the vehicle.
  - Tire chains are installed.
  - There is an abnormal vibration in the steering wheel or the steering wheel is heavier than usual.
  - The steering wheel has been replaced with parts other than genuine SUBARU parts.
  - The headlights are dirty or they have snow, ice or dirt on them. (Objects are not adequately illuminated and are difficult to detect.)
  - The headlights are not aligned correctly. (Objects are not adequately illuminated and are difficult to detect.)
  - The headlights, fog lights and other lights have been modified.
  - Vehicle operation has become unstable due to an accident or malfunction.
  - The brake system warning light is illuminated.*2
  - The vehicle is tilted at an extreme angle due to loaded cargo or other factors.
  - The maximum number of occupants is exceeded.
  - A trailer or another vehicle, etc. is being towed.
  - The combination meter is not operating properly. For example, an indicator light or a warning light on the combination meter does not properly turn on or off, a beep does not sound, or the indication on the combination meter display is different from when it is normal.*3

*1: The wheels and tires have functions that are critically important. Be sure to use the correct ones.
For details, refer to the vehicle Owner's Manual.

*2: If the brake system warning light does not turn off, immediately pull the vehicle over in a safe place and contact a SUBARU dealer to have the system inspected. For details, refer to the vehicle Owner's Manual.

*3: For details about the functions and operations of the combination meter, refer to the vehicle Owner's Manual.

- Lane Departure Prevention Function is designed for use on expressways, freeways, toll roads, interstate highways and similar limited access roads. It is not intended to be used in city traffic. In the following conditions, do not use Lane Departure Prevention Function. Doing so may result in an accident.
  - Ordinary roads (roads other than those mentioned above)
    Depending on the driving environment (complexity of roads and other factors), the system may not be able to perform as the traffic conditions require, and that may result in an accident.
  - Roads with sharp curves
  - Roads with lane restrictions or tentative lanes due to construction work, etc.
  - Old lane markings remain.
  - Avoiding parked vehicles
  - Snow, puddles or snow melting agents remain on the road surface.
  - Cracks or constructed traces remain on the road surface.
  - Frozen roads, snow-covered roads or other slippery road surfaces
    The tires may spin, causing loss of control of the vehicle.

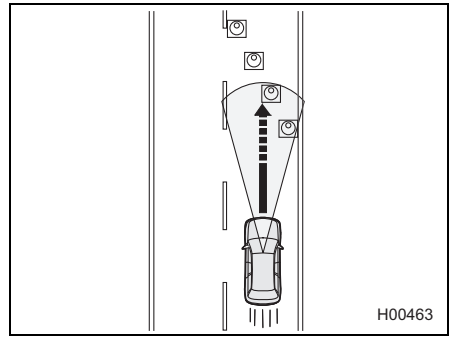

  - Entering a sharp curve into an interchange or junction, or a service area, parking area, toll booth or other facilities
  - Visibility is poor due to sand, smoke or water vapor blowing in the wind, or the front vision is obscured due to water splashes, snow, dirt or dust stir up generated by the vehicle in front or oncoming traffic.
  - The stereo camera's field of view is obstructed by fogging, snow, dirt, frost, dust, scratches, or smears on the windshield, or by light reflecting off the dirt, etc.
  - Rain or dirt has not been fully wiped off of the windshield. There is a risk of that the stereo camera may not detect the lanes.
  - The stereo camera's field of view is obstructed (for example by a canoe on the roof of the vehicle).

Continued on next page ⇒

⇒ Continued from previous page

- The stereo camera may have difficulty detecting the lane markings under the following conditions and the system may not operate properly.
  - At night or in a tunnel without the headlights on
  - In bad weather (for example, rain, snow or thick fog)
  - The road surface is wet and shining by reflected light.
  - There are other traffic markings on the lane you are driving in (arrows, words, etc.).
  - The distance between your vehicle and the vehicle in front is short, making it difficult to detect lane markings.
  - A vehicle intruded from a neighboring lane or the vehicle in front changed lanes.
  - The shape of a curve in the road suddenly changes.
  - Shadows of guardrails or similar objects are overlapped on the lane markings.
  - Strong light is coming from the front (sunlight or headlight beams of oncoming traffic, etc.).
  - The width of a lane is either too narrow or too wide.
  - The width of a lane has changed.

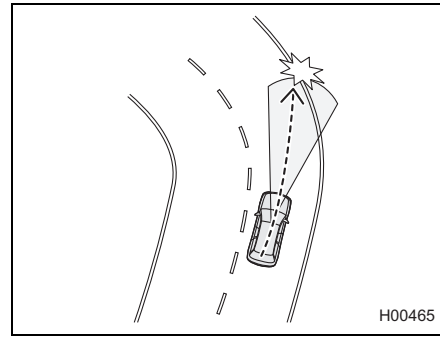

  - The stereo camera may have difficulty detecting the lane due to the performance of the camera.
    - There are no lane markings or they are very worn.
    - The lane markings are painted in yellow.
    - The lane markings are similar in color to the road surface.
    - The lane markings are drawn in double.
    - The width of lane markings is narrow.
    - Lines that are not lane markings are painted on roads.
    - The lane markings are touching the walls and poles.

- The shape of lane markings suddenly changes (entrance/exit of a curve, crank and winding road, etc.).

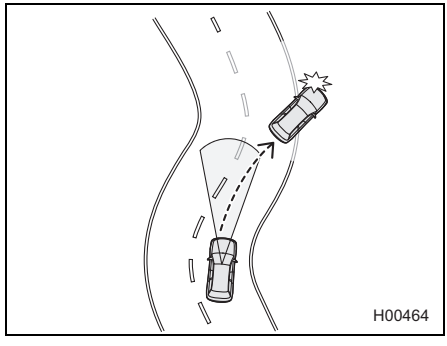

- Going into lanes that lead to interchanges, junctions, service areas or parking areas
- There is a curb or a side wall on the road shoulder.
- The brightness changes such as at a tunnel entrance or exit or when you drive under an overpass.
- Fluid has not been fully wiped off the windshield during or after washer use.

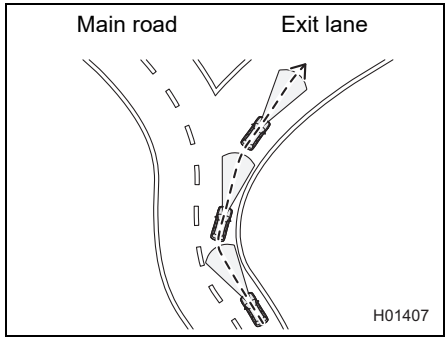

CAUTION

- The performance of Lane Departure Prevention Function may not be optimal under the following conditions. In addition, Lane Departure Prevention Function may not operate or the operation may be canceled.
  - Immediately after the weight of your vehicle changes radically
  - Immediately after the replacement of a tire or the adjustment of tire pressure
  - Immediately after the adjustment, repair or replacement of the camera or related components
  - Immediately after the repair or replacement of the suspension or steering system
  - A winter tire or a tire other than a genuine SUBARU tire is used.
  - The vehicle is in a crosswind.
  - The road grade abruptly changes (uphill or downhill).
  - The grade of the crossing direction in a road is large or changes abruptly.
  - Unevenness, winding and joint of a road surface
  - The acceleration/deceleration is high.
  - Immediately after starting the hybrid system when the outside temperature is low.
  - The outside temperature is high.
- When you do not use Lane Departure Prevention Function, be sure to turn it off. If the function is left on, the function may operate unexpectedly, causing an accident.
  ⇒ Page 138
- If you turn on Lane Departure Prevention Function, the operation power of electric power steering may change.

How to use Lane Departure Prevention Function

Operate the center information display to turn on Lane Departure Prevention Function. This function is turned on by selecting “All Functions” or “Lane Departure Prevention Function Only” on the “Lane Departure” screen of the EyeSight settings.
⇒ Page 193

When Lane Departure Prevention Function is turned on, the lane indicator (gray) and your vehicle indicator are displayed on the combination meter display.

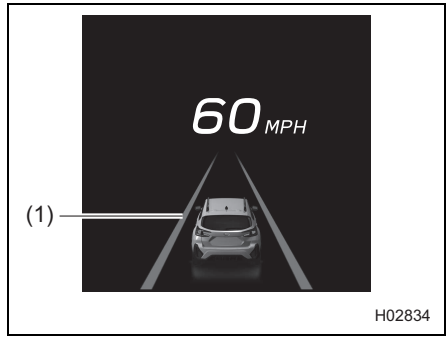

(1) Lane indicator (gray)

Lane Departure Prevention Function goes into the standby status, and the lane indicator (white) illuminates when all of the following conditions are met.

- The vehicle speed is between approximately 37 mph (60 km/h) and 90 mph (145 km/h).
- The system is detecting the lane markings.
- Lane Centering Function is not operating.
- The driver is operating the steering wheel.
- On a road that has a lane width that is between approximately 10 ft (3 m) and 15 ft (4.5 m)
- On a straight road or gentle curve
- Driving near the center of a lane

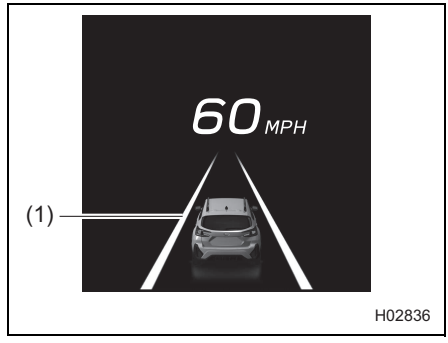

(1) White

When the vehicle is likely to depart the lane, Lane Departure Prevention Function starts to operate and the lane indicator changes from white to yellow on the side where Lane Departure Prevention Function activated.

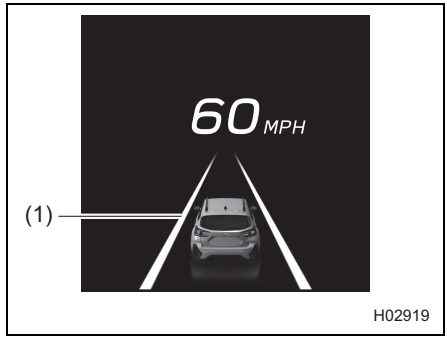

(1) Yellow (on the side of departure)

NOTE

- If you just lightly put your hands on the steering wheel for a certain period of time or if you do not operate the steering wheel, the function will temporarily be canceled. Also, the Lane Departure Prevention Function cancellation message is displayed on the combination meter display.
- Lane Departure Prevention Function operates when the system determines that the vehicle will depart the lane if you continue to drive in the same manner. Therefore, it operates at an earlier timing than Lane Departure Warning (⇒ page 159). It may depend on the surrounding environment and road condition.
- The lane indicator in the standby status and in operation may illuminate only on the left side or right side.
- The on/off status of Lane Departure Prevention Function is restored when you restart the hybrid system.
- When both Lane Departure Prevention Function and Emergency Lane Keep Assist are turned on:
  - After an activation of Emergency Lane Keep Assist and the following vehicle is no longer detected, if there is still a possibility that your vehicle will depart the lane, control will switch to Lane Departure Prevention Function.
  - If a vehicle is detected nearby while Lane Departure Prevention Function is active, control will switch to Emergency Lane Keep Assist.
- If / (Lane Centering indicator) (white) is illuminated while Adaptive Cruise Control is on, Lane Departure Prevention Function will not activate.

■Canceling Lane Departure Prevention Function

●Canceling by driver operation

Any of the following operations temporarily cancels Lane Departure Prevention Function.
While temporarily canceling this function, the lane indicator turns gray.

- Depressing the brake pedal strongly
- Operating the turn signal lever
- The system determines that the driver operates the steering wheel to make a lane change.
- Turning on the hazard warning flasher switch

●Automatic cancellation by the system

Under the following conditions, Lane Departure Prevention Function is temporarily canceled.
While the function is temporarily canceled, the lane indicator turns gray.

- The system does not detect the lane markings.
- The vehicle speed is less than approximately 37 mph (60 km/h) or is more than approximately 100 mph (160 km/h).
- Vehicle Dynamics Control or Traction Control Function is activated.
- Any door (except the rear gate) is opened.
- The driver's seatbelt is unfastened.
- The electronic parking brake is applied.
- The select lever is moved to a position other than "D" or "M".
- Entering a sharp curve
- On a sharp curve
- Due to the road conditions
- Due to another system operating
- The EyeSight system has a malfunction. (EyeSight warning indicator: Yellow)
  ⇒ Page 187
- The EyeSight system has stopped temporarily. (EyeSight temporary stop indicator: White)
  ⇒ Page 189

- The system does not detect steering operation by the driver for a certain period of time.
  - When the system detects no steering operation, an interruption screen is displayed on the combination meter display. The interruption screen continues to be displayed until the system detects the steering operation.



H02401

If the system still does not detect any steering operation, Lane Departure Prevention Function is temporarily canceled. The system notifies the driver with notification (1 short beep and 1 long beep) and an interruption screen on the combination meter display.



H02260

NOTE

In the following cases, Lane Departure Prevention Function may temporarily be canceled because the system cannot detect steering wheel operation by the driver.

- The driver is driving with hands placed lightly on the steering wheel.
- Driver steering operation is insufficient.

■Turning off Lane Departure Prevention Function

Operate the center information display to turn off Lane Departure Prevention Function. This function is turned off by selecting “Warning Buzzer Only” or “OFF” on the “Lane Departure” screen of the EyeSight settings.

⇒ Page 193

Emergency Lane Keep Assist

When the vehicle speed is approximately 37 mph (60 km/h) or more on an expressway, freeway or interstate highway and the vehicle is likely to depart the lane when there is a following vehicle approaching in the neighboring lane, this function assists the driver to turn the steering wheel in the direction which will prevent lane departure, keeping the vehicle in the lane. If the vehicle departs the lane, an interruption screen is displayed that shows which side of lane was crossed, and an alert sounds repeated 3 short beeps.

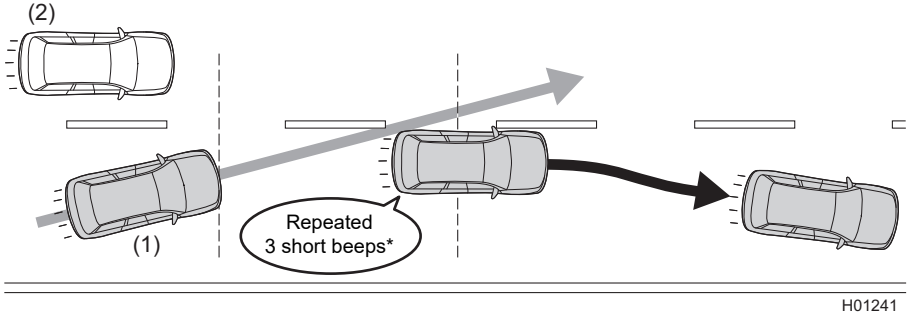

(1) Your vehicle
(2) Following vehicle in neighboring lane
*: The alert will not sound before the vehicle departs the lane.

WARNING

Emergency Lane Keep Assist is not an automatic driving system.
Do not overestimate the capabilities of Emergency Lane Keep Assist. It is not a system to assist inattentive driving or meant to permit driving without holding the steering wheel. Make sure to grip the steering wheel while driving. To drive safely, check the distance from the vehicle in front or from a vehicle driving in parallel with your vehicle, the surrounding conditions and the surrounding environment while driving.

If you feel that the level of control and timing by the system are different from your own driving style, the system may not support safe driving. Do not use Emergency Lane Keep Assist.

Emergency Lane Keep Assist activates only when your vehicle is likely to depart the driving lane and there is a following vehicle approaching in the neighboring lane. For this reasons, it will not operate correctly in response to the following.

- Light motor vehicles, motorcycles, vehicles with special shapes
- Bicycles
- Pedestrians
- A vehicle suddenly appears.
- A part of the vehicle is not shown.
- The system judges that there are no possibility of collisions.

Emergency Lane Keep Assist does not always operate under all situations. If you rely only on Emergency Lane Keep Assist to stay in a lane, it may cause an accident such as a collision with an obstacle beside your lane or with a vehicle driving in a neighboring lane.

- Check that there are no problems with the tires and brakes during a daily inspection before using the system.
  ⇒ Refer to “Warranty and Maintenance Booklet”.
- The system may not operate properly under the following conditions. Do not use Emergency Lane Keep Assist.
  - The air pressure of tires is not to specification.[*1]
  - Tires that are unevenly worn or tires with uneven wear patterns are installed.[*1]

- Tires that are the wrong size are installed.*1
- The wheels are out of balance (e.g., the balance weight is removed or misaligned).*1
- The wheels are out of alignment.*1
- A flat tire has been fixed temporarily with a tire repair kit.
- The suspension has been modified (including genuine SUBARU parts).
- An object that obstructs the stereo camera's view is installed on the vehicle.
- Tire chains are installed.
- There is an abnormal vibration in the steering wheel or the steering wheel is heavier than usual.
- The steering wheel has been replaced with parts other than genuine SUBARU parts.
- The headlights are dirty or they have snow, ice or dirt on them. (Objects are not adequately illuminated and are difficult to detect.)
- The headlights are not aligned correctly. (Objects are not adequately illuminated and are difficult to detect.)
- The headlights, fog lights and other lights have been modified.
- Vehicle operation has become unstable due to an accident or malfunction.
- The brake system warning light is illuminated.*2
- The vehicle is tilted at an extreme angle due to loaded cargo or other factors.
- The maximum number of occupants is exceeded.
- A trailer or another vehicle, etc. is being towed.
- The combination meter is not operating properly. For example, an indicator light or a warning light on the combination meter does not properly turn on or off, a beep does not sound, or the indication on the combination meter display is different from when it is normal.*3

*1: The wheels and tires have functions that are critically important. Be sure to use the correct ones.
For details, refer to the vehicle Owner's Manual.

*2: If the brake system warning light does not turn off, immediately pull the vehicle over in a safe place and contact a SUBARU dealer to have the system inspected. For details, refer to the vehicle Owner's Manual.

*3: For details about the functions and operations of the combination meter, refer to the vehicle Owner's Manual.

Continued on next page ⇒

⇒ Continued from previous page

- Emergency Lane Keep Assist is designed for use on expressways, freeways, toll roads, interstate highways and similar limited access roads. It is not intended to be used in city traffic. In the following conditions, do not use Emergency Lane Keep Assist. Doing so may result in an accident.
  - Ordinary roads (roads other than those mentioned above)
    Depending on the driving environment (complexity of roads and other factors), the system may not be able to perform as the traffic conditions require, and that may result in an accident.
  - Roads with sharp curves
  - Roads with lane restrictions or tentative lanes due to construction work, etc.
  - Old lane markings remain.
  - Avoiding parked vehicles
  - Snow, puddles or snow melting agents remain on the road surface.
  - Cracks or constructed traces remain on the road surface.
  - Frozen roads, snow-covered roads or other slippery road surfaces
    The tires may spin, causing loss of control of the vehicle.

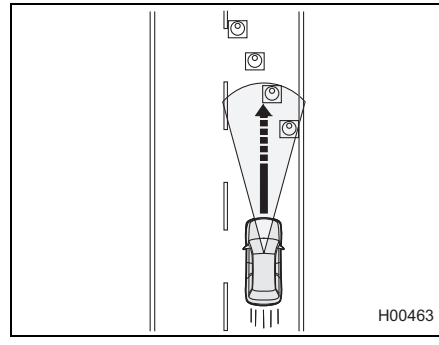

  - Entering a sharp curve into an interchange or junction, or a service area, parking area, toll booth or other facilities
  - Visibility is poor due to sand, smoke or water vapor blowing in the wind, or the front vision is obscured due to water splashes, snow, dirt or dust stir up generated by the vehicle in front or oncoming traffic.
  - The stereo camera's field of view is obstructed by fogging, snow, dirt, frost, dust, scratches, or smears on the windshield, or by light reflecting off the dirt, etc.
  - Rain or dirt has not been fully wiped off of the windshield. There is a risk of that the stereo camera may not detect the lanes.
  - The stereo camera's field of view is obstructed (for example by a canoe on the roof of the vehicle).

- The stereo camera may have difficulty detecting the lane markings under the following conditions and the system may not operate properly.
  - At night or in a tunnel without the headlights on
  - In bad weather (for example, rain, snow or thick fog)
  - The road surface is wet and shining by reflected light.
  - There are other traffic markings on the lane you are driving in (arrows, words, etc.).
  - The distance between your vehicle and the vehicle in front is short, making it difficult to detect lane markings.
  - A vehicle intruded from a neighboring lane or the vehicle in front changed lanes.
  - The shape of a curve in the road suddenly changes.
  - Shadows of guardrails or similar objects are overlapped on the lane markings.
  - Strong light is coming from the front (sunlight or headlight beams of oncoming traffic, etc.).
  - The width of a lane is either too narrow or too wide.
  - The width of a lane has changed.

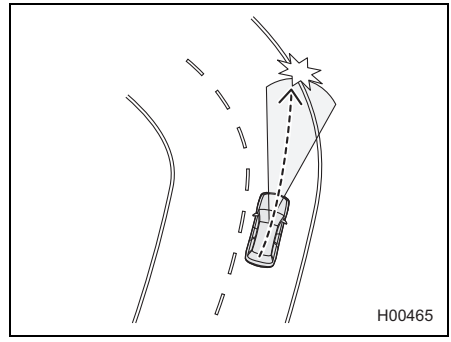

  - The stereo camera may have difficulty detecting the lane due to the performance of the camera.
    - There are no lane markings or they are very worn.
    - The lane markings are painted in yellow.
    - The lane markings are similar in color to the road surface.
    - The lane markings are drawn in double.
    - The width of lane markings is narrow.
    - Lines that are not lane markings are painted on roads.
    - The lane markings are touching the walls and poles.

Continued on next page ⇒

⇒ Continued from previous page

- The shape of lane markings suddenly changes (entrance/exit of a curve, crank and winding road, etc.).

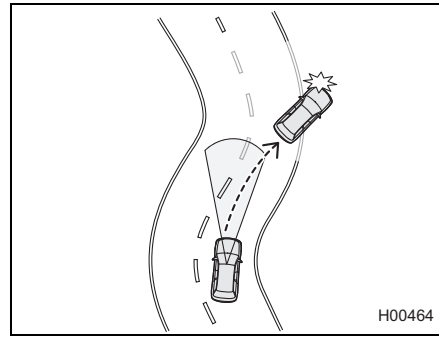

- Going into lanes that lead to interchanges, junctions, service areas or parking areas
- There is a curb or a side wall on the road shoulder.
- The brightness changes such as at a tunnel entrance or exit or when you drive under an overpass.
- Fluid has not been fully wiped off the windshield during or after washer use.

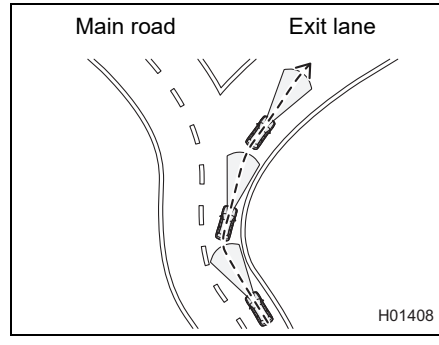

CAUTION

- The performance of Emergency Lane Keep Assist may not be optimal under the following conditions. In addition, Emergency Lane Keep Assist may not operate or the operation may be canceled.
  - Immediately after the weight of your vehicle changes radically
  - Immediately after the replacement of a tire or the adjustment of tire pressure
  - Immediately after the adjustment, repair or replacement of the camera or related components
  - Immediately after the repair or replacement of the suspension or steering system
  - A winter tire or a tire other than a genuine SUBARU tire is used.
  - The vehicle is in a crosswind.
  - The road grade abruptly changes (uphill or downhill).
  - The grade of the crossing direction in a road is large or changes abruptly.
  - Unevenness, winding and joint of a road surface
  - The acceleration/deceleration is high.
  - Immediately after starting the hybrid system when the outside temperature is low.
  - The outside temperature is high.
- When you do not use Emergency Lane Keep Assist, be sure to turn it off. If the function is left on, the function may operate unexpectedly, causing an accident.
  ⇒ Page 150
- If you turn on Emergency Lane Keep Assist, the operation power of electric power steering may change.
- There are limits to the detection performance of the radar sensors used for Emergency Lane Keep Assist.
  ⇒ Refer to the vehicle Owner's Manual for details.

NOTE

- In the following cases, Emergency Lane Keep Assist will temporarily stop operating (or may stop operating) and  (Emergency Lane Keep Assist OFF indicator) will appear. Emergency Lane Keep Assist will resume operation once these conditions are corrected, and  (Emergency Lane Keep Assist OFF indicator) will disappear. However, if  (Emergency Lane Keep Assist OFF indicator) has appeared for a prolonged time, we recommend that you contact a SUBARU dealer and have the system inspected.
  - A large amount of snow or ice sticks to the rear bumper surface around the radar sensors.

Continued on next page ⇒

⇒ Continued from previous page

- The vehicle is driven on a snow-covered road or in an environment in which there are no objects around (such as a desert) for a long time.
- The temperature around the radar sensors increased excessively due to long driving on uphill grades in summer, etc.
- The temperature around the radar sensors becomes extremely low.
- The vehicle battery voltage lowers.
- An overvoltage occurs in the vehicle battery.
- The radar sensor becomes significantly misaligned (If the orientation of the radar sensor is shifted for any reason, readjustment is required. We recommend that you have the sensor adjusted at a SUBARU dealer.).

• The detectability of the radar sensors is restricted. The Emergency Lane Keep Assist detection may be impaired and the system may not operate properly under the following conditions.
- The rear bumper around the radar sensors is distorted.
- Ice, snow or mud adheres to the rear bumper surface around the radar sensors.
- Stickers, etc. are affixed on the areas of the radar sensors on the rear bumper.
- During adverse weather conditions such as rain, snow or fog
- On wet roads such as snow-covered roads and through puddles

• The radar sensors may not detect or may have difficulty detecting the following vehicles and objects.
- Small motorcycles, bicycles, pedestrians, stationary objects on the road or road side, etc.
- Vehicles with body shapes that the radar may not reflect (vehicles with lower body height such as a trailer with no cargo and sports cars)
- Vehicles that are not approaching your vehicle even though they are in the detection area (either on a neighboring lane to the rear or beside your vehicle when reversing) (The system determines the presence of approaching vehicles based on data detected by the radar sensors.)
- Vehicles traveling at significantly different speeds
- Vehicles driving parallel to and at almost the same speed as your vehicle for a prolonged time
- Oncoming vehicles
- Vehicles in a lane beyond the neighboring lane
- Vehicles traveling at a significantly lower speed that you are trying to overtake

How to use Emergency Lane Keep Assist

Operate the center information display to turn on Emergency Lane Keep Assist.
This function is turned on by selecting “ON” on the “Emergency Lane Keeping Assist” screen of the EyeSight settings.
⇒ Page 193

When Emergency Lane Keep Assist is turned on, (Emergency Lane Keep Assist OFF indicator) turns off on the combination meter display.

The system can activate when all of the following conditions are met. However even when all of the following conditions are met, there are cases when Emergency Lane Keep Assist does not activate because the lane markings or following vehicle cannot be detected.

- Your vehicle speed is between approximately 37 mph (60 km/h) and 90 mph (145 km/h).
- The system is detecting the lane markings.
- The system is detecting the following vehicle.
- BSD/RCTA is not turned off.
- Lane Centering Function is not operating.
- The driver is operating the steering wheel.
- On a road that has a lane width that is between approximately 10 ft (3 m) and 15 ft (4.5 m)
- On a straight road or gentle curve
- Driving near the center of a lane

When the vehicle is likely to depart the lane, Emergency Lane Keep Assist starts to operate. The lane indicator on the side that the vehicle is likely to cross will blink in yellow.

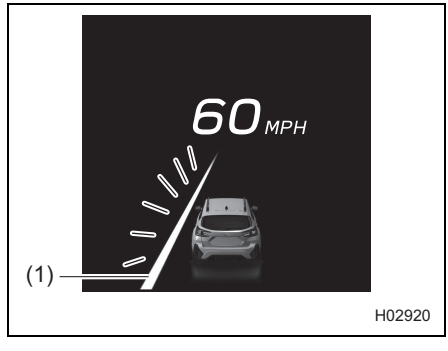

(1) Lane indicator (blinks in yellow on the side of departure)

When the vehicle departs the lane, an alert sounds repeated 3 short beeps, and an interruption screen shows which side was crossed.



H02734

*: The illustration depicts a vehicle crossing the left line.

NOTE

- Emergency Lane Keep Assist does not operate if BSD/RCTA is turned off. At this time, (Emergency Lane Keep Assist OFF indicator) illuminates on the combination meter display.
- Emergency Lane Keep Assist does not operate if the system cannot detect a following vehicle approaching in the neighboring lane.
- The on/off status of Emergency Lane Keep Assist is restored when you restart the hybrid system.
- When both Lane Departure Prevention Function and Emergency Lane Keep Assist are turned on:
  - After an activation of Emergency Lane Keep Assist and the following vehicle is no longer detected, if there is still a possibility that your vehicle will depart the lane, control will switch to Lane Departure Prevention Function.
  - If a vehicle is detected nearby while Lane Departure Prevention Function is active, control will switch to Emergency Lane Keep Assist.
- Emergency Lane Keep Assist does not operate when Lane Centering Function is active.

■Canceling Emergency Lane Keep Assist

●Canceling by driver operation

Any of the following operations temporarily cancels Emergency Lane Keep Assist.

- Depressing the brake pedal strongly
- The system determines that the driver operates the steering wheel strongly.

●Automatic cancellation by the system

Under the following conditions, Emergency Lane Keep Assist is temporarily canceled.

- The system does not detect the lane markings.
- The vehicle speed is less than approximately 37 mph (60 km/h) or is more than approximately 100 mph (160 km/h).
- Vehicle Dynamics Control or Traction Control Function is activated.
- The electronic parking brake is applied.
- Any door (except the rear gate) is opened.
- The driver's seatbelt is unfastened.
- The select lever is moved to a position other than "D" or "M".
- Entering a sharp curve
- On a sharp curve
- Due to the road conditions
- Due to another system operating
- The EyeSight system has a malfunction. (EyeSight warning indicator: Yellow)
  ⇒ Page 187
- The EyeSight system has stopped temporarily. (EyeSight temporary stop indicator: White)
  ⇒ Page 189
- Emergency Lane Keep Assist has a malfunction, or the system is temporarily stopped. (Emergency Lane Keep Assist OFF indicator)

■Emergency Lane Keep Assist malfunction and temporary stop

If Emergency Lane Keep Assist temporarily stops, (Emergency Lane Keep Assist OFF indicator) illuminates. When the cause has been resolved, operation returns to normal. This indicator will also appear in extremely hot or cold environments, and if there is an abnormality in the battery voltage.

If (Emergency Lane Keep Assist OFF indicator) stays illuminated for a long time, the EyeSight system may have a malfunction. Contact a SUBARU dealer and have the system inspected.

■Turning off Emergency Lane Keep Assist

Operate the center information display to turn off Emergency Lane Keep Assist.

This function is turned off by selecting “OFF” on the “Emergency Lane Keeping Assist” screen of the EyeSight settings.

⇒ Page 193

If Emergency Lane Keep Assist is turned off, (Emergency Lane Keep Assist OFF indicator) illuminates on the combination meter display.

●Emergency Lane Keep Assist OFF indicator

This indicator illuminates when the ignition switch is turned to the ON position, and then several seconds after the hybrid system starts, it turns off or remains illuminated depending on the current status (ON or OFF). It illuminates when Emergency Lane Keep Assist is turned off.

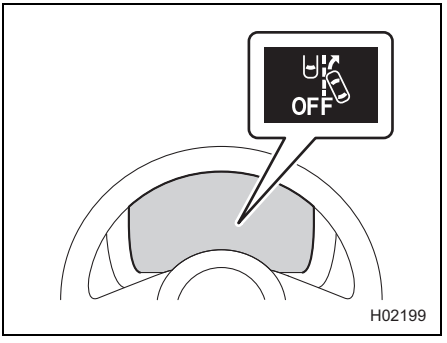

Pre-Collision Throttle Management

When an obstacle is detected in front of the vehicle, and the vehicle is stopped or traveling very slowly, if the system determines that the accelerator pedal has been depressed by more than the necessary amount (due to driver error), it greatly restricts hybrid system output and ensures that vehicle forward movement is slower than normal in order to give the driver additional time to brake or react.

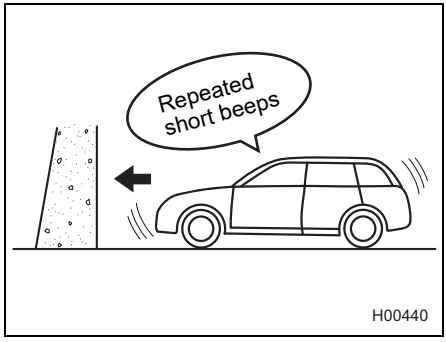

During system operation, an alert sounds repeated short beeps and an interruption screen is displayed.
This function only activates when the select lever is in the “D” or “M” position.

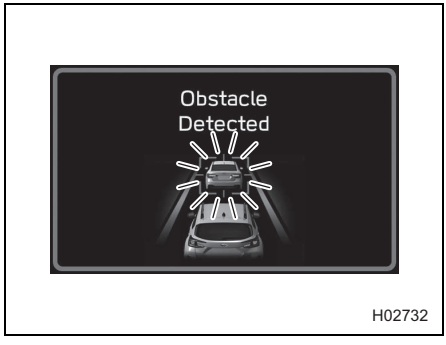

WARNING

Do not rely excessively on Pre-Collision Throttle Management. Pre-Collision Throttle Management is not designed to help you avoid collisions in all situations. Always check the select lever and pedal positions as well as the surrounding environment before starting and operating the vehicle. Relying only on Pre-Collision Throttle Management could result in an accident.

- Pre-Collision Throttle Management is not designed to maintain the vehicle in a stopped condition.
- Pre-Collision Throttle Management will not reduce acceleration under all conditions. It is also not designed to prevent collisions.
- Pre-Collision Throttle Management will operate when an obstacle is detected in front. However, this function will not reduce acceleration in cases where no obstacle is detected (for example when approaching a cliff, etc.).

Continued on next page ⇒

⇒ Continued from previous page

- Do not intentionally depress the accelerator pedal excessively when there are obstacles nearby. If the driver relies only on Pre-Collision Throttle Management to control acceleration, collisions may occur.
- If your vehicle is trapped on a railroad crossing and you are trying to escape by driving through the crossing gate, the stereo camera may recognize the crossing gate as an obstacle and Pre-Collision Throttle Management may activate. In this case, remain calm and either continue to depress the accelerator pedal or turn off Pre-Collision Throttle Management.
  ⇒ Page 157
- Pre-Collision Throttle Management may not activate depending on the following conditions:
  - The distance between your vehicle and the obstacle, speed difference, and horizontal offset
  - Recognition status of the stereo camera
    In particular, the function may not activate in the following cases:
    - Bad weather (for example heavy rain, a blizzard or thick fog)
    - Visibility is poor due to sand, smoke or water vapor blowing in the wind, or the front vision is obscured due to water splashes, snow, dirt or dust stir up generated by the vehicle in front or oncoming traffic.
    - In a dark area (indoor parking area, etc.)
    - There is an obstacle outside the area illuminated by the headlights.
    - Strong light is coming from the front (for example sunlight at sunrise or sunset headlight beams, etc.).
    - The stereo camera’s field of view is obstructed by fogging, snow, dirt, frost, dust, scratches, or smears on the windshield, or by light reflecting off the dirt, etc.
    - Fluid has not been fully wiped off the windshield during or after washer use.
    - Obstacles cannot be correctly recognized due to water droplets from rain or the washer, or the wiper blades obstructing the stereo camera’s field of view.
    - The stereo camera’s field of view is obstructed (for example by a canoe on the roof of the vehicle).
    - With low obstacles (low wall, crash barrier, low vehicle, etc.)
    - The size and height of an obstacle is smaller than the limitations of the stereo camera’s recognition capability.
      - With small animals or children
      - With pedestrians who are sitting or lying down

- The rear portion nearest your vehicle is too small or too close (such as a trailer or oncoming vehicle). The system may not recognize the part of that vehicle which is closest to you.

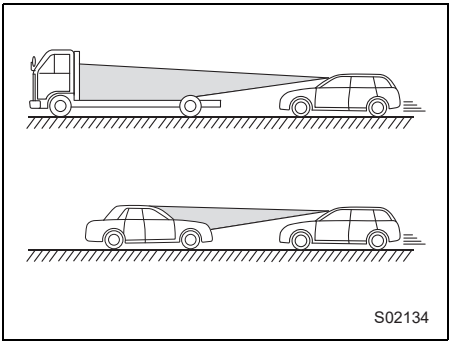

- There is a fence or wall, etc., with a uniform pattern (striped pattern, brick, etc.) or with no pattern in front.
- There is a wall or door made of glass or a mirror in front.
- An obstacle (another vehicle, motorcycle, cyclist, pedestrian, animal or child, etc.) cuts in from the side or jumps out suddenly.
- Your vehicle is immediately behind an obstacle after changing lanes.
- On sharp curves, steep uphill grades or steep downhill grades
- The vehicle is tilted at an extreme angle due to loaded cargo or other factors.
- The brightness changes such as at a tunnel entrance or exit or when you drive under an overpass.
- The lead vehicle's tail lights are not lit at night or in a tunnel.
- It is pitch black and there are no objects in the surrounding area.
- The surrounding area is mostly the same color (for example in a snowy location).

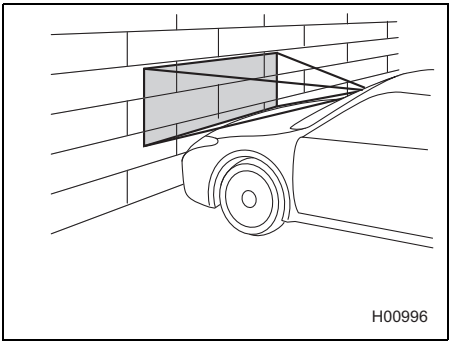

- The system determines that steering operation by the driver is intended as evasive action.

• For your safety, do not test Pre-Collision Throttle Management on its own. It may operate improperly and cause an accident.

CAUTION

- In the following situations, turn off Pre-Collision Throttle Management. Otherwise Pre-Collision Throttle Management may activate unexpectedly.
  ⇒ Page 157
  - The vehicle is being towed.
  - The vehicle is being loaded onto a carrier.
  - A chassis dynamometer, free-rollers or similar equipment is being used.
  - A mechanic lifts up the vehicle, starts the hybrid system and allows the wheels to spin freely.
  - Driving on a race track
  - Passing hanging banners, flags or branches
  - Thick/tall vegetation is touching the vehicle.
- Pre-Collision Throttle Management may activate in the following situations. Therefore concentrate on safe driving.
  - Your vehicle is close to the vehicle in front.
  - Passing through an automatic gate
  - Reflection or markings on a wall or the road surface in front of your vehicle is difficult to distinguish from an identified object.
  - Your vehicle is in a location where the grade of the road changes rapidly.

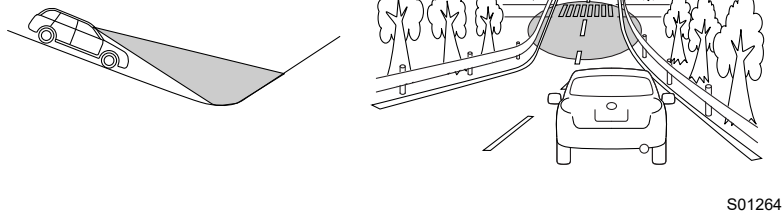

S01264

- Passing through clouds of steam or smoke
- The exhaust gas emitted by the vehicle in front is clearly visible in cold weather, etc.

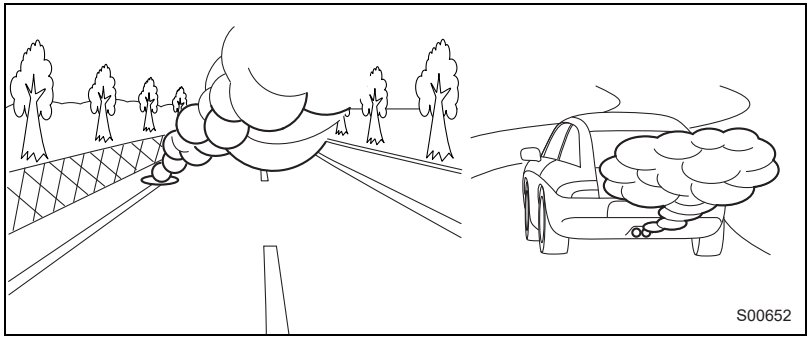

- Passing through water spray from road sprinklers or snow clearing sprinklers on the road

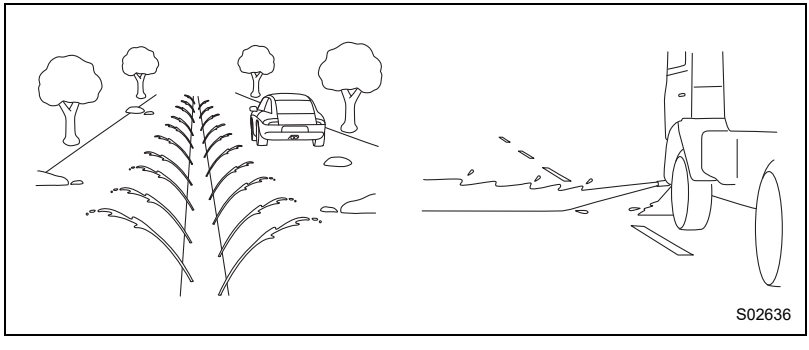

Continued on next page ⇒

⇒ Continued from previous page

- In adverse weather, such as heavy snow or snowstorms
- There is an obstacle on a curve or intersection.
- You are passing close to the side of a vehicle, an obstacle or vegetation.
- Stopping very close to a wall or a vehicle in front

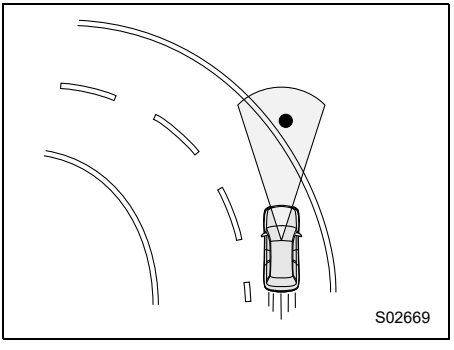

NOTE

- When the accelerator pedal is depressed for approximately 3 seconds, Pre-Collision Throttle Management will be released gradually.
- When Pre-Collision Braking System is turned off, Pre-Collision Throttle Management is also turned off.
  ⇒ Page 62

Turning on/off Pre-Collision Throttle Management

While the vehicle is stopped, operate the center information display to turn on/off Pre-Collision Throttle Management.
This function is turned on by selecting “Setting ON” on the “Pre-Collision Braking” screen of the EyeSight settings.
This function is turned off by selecting “Setting OFF” on the “Pre-Collision Braking” screen of the EyeSight settings.
⇒ Page 193

If Pre-Collision Throttle Management is turned off, (Pre-Collision Braking System OFF indicator light) illuminates on the combination meter.
If Pre-Collision Throttle Management is turned on, (Pre-Collision Braking System OFF indicator light) turns off on the combination meter.

NOTE

- The on/off setting for Pre-Collision Throttle Management operates in cooperation with Pre-Collision Braking System and Automatic Emergency Steering.
- Even when Pre-Collision Throttle Management is turned off, if the hybrid system is turned off and then restarted, Pre-Collision Throttle Management will be turned on. The system default setting when the vehicle is restarted is on.
- Pre-Collision Braking System cannot be turned off while Lane Centering Function is operating.

■Pre-Collision Braking System OFF indicator light

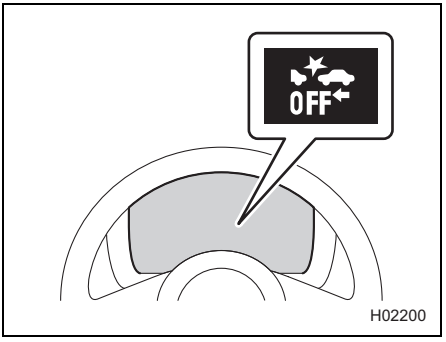

This indicator light illuminates when the ignition switch is turned to the ON position, and then turns off several seconds after the hybrid system starts. It illuminates when Pre-Collision Braking System and Pre-Collision Throttle Management are turned off.

It also illuminates under the following conditions.

- The EyeSight system has a malfunction. EyeSight (EyeSight warning indicator: Yellow)
  ⇒ Page 187
- The EyeSight system has stopped temporarily. EyeSight (EyeSight temporary stop indicator: White)
  ⇒ Page 189

NOTE

- If OFF (Pre-Collision Braking System OFF indicator light) illuminates, (Automatic Emergency Steering OFF indicator) also illuminates.
  ⇒ Page 61
- When OFF (Pre-Collision Braking System OFF indicator light) illuminates, Pre-Collision Braking System (including Pre-Collision Braking Assist), Automatic Emergency Steering and Pre-Collision Throttle Management do not operate.

Lane Departure Warning

When vehicle speed is approximately 30 mph (50 km/h) or more, this function warns the driver if the system detects that the vehicle is likely to depart the traffic lane.
When Lane Departure Warning activates, an alert sounds 3 short beeps and an interruption screen will be displayed.

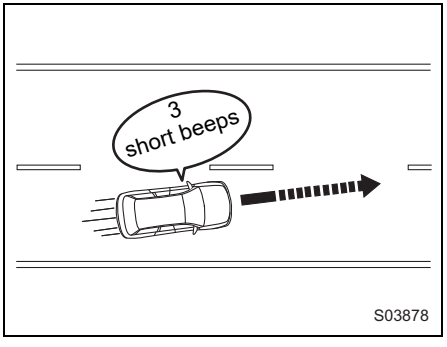

S03878

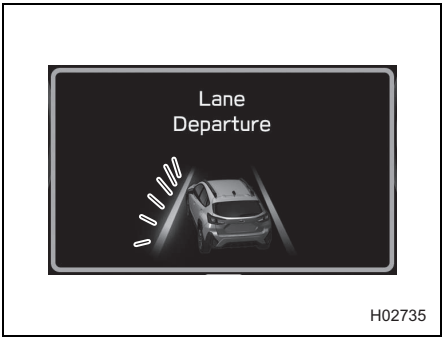

H02735

*: The illustration depicts a vehicle likely to cross the left line.

WARNING

- Lane Departure Warning will not operate in all conditions. It also will not automatically return the vehicle to the original lane. If the driver relies only on Lane Departure Warning to keep the vehicle in the lane, lane departure may occur, resulting in an accident.
  Lane Departure Warning activates when it detects lane markings. However, it is not a function which can detect the edge of a road (shoulders or side ditches, etc.) and warn the driver.

Continued on next page ⇒

⇒ Continued from previous page

- The stereo camera may have difficulty detecting the lane markings under the following conditions and the system may not operate properly.
  - At night or in a tunnel without the headlights on
  - In bad weather (for example, rain, snow or thick fog)
  - The road surface is wet and shining by reflected light.
  - There are other traffic markings on the lane you are driving in (arrows, words, etc.).
  - The distance between your vehicle and the vehicle in front is short, making it difficult to detect lane markings.
  - A vehicle intruded from a neighboring lane or the vehicle in front changed lanes.
  - The shape of a curve in the road suddenly changes.
  - Shadows of guardrails or similar objects are overlapped on the lane markings.
  - Strong light is coming from the front (sunlight or headlight beams of oncoming traffic, etc.).
  - The width of a lane is either too narrow or too wide.
  - The width of a lane has changed.

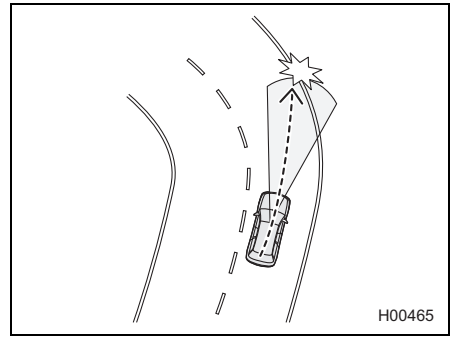

  - The stereo camera may have difficulty detecting the lane due to the performance of the camera.
    - There are no lane markings or they are very worn.
    - The lane markings are painted in yellow.
    - The lane markings are similar in color to the road surface.
    - The lane markings are drawn in double.
    - The width of lane markings is narrow.
    - Lines that are not lane markings are painted on roads.
    - The lane markings are touching the walls and poles.

- The shape of lane markings suddenly changes (entrance/exit of a curve, crank and winding road, etc.).
- There is a curb or a side wall on the road shoulder.
- The brightness changes such as at a tunnel entrance or exit or when you drive under an overpass.
- Fluid has not been fully wiped off the windshield during or after washer use.

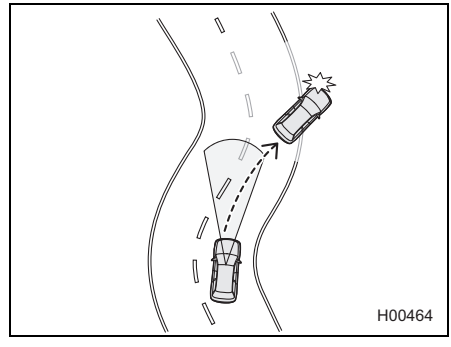

- The vehicle is tilted at an extreme angle due to loaded cargo or other factors.
- Snow, puddles or snow melting agents remain on the road surface.
- Visibility is poor due to sand, smoke or water vapor blowing in the wind, or the front vision is obscured due to water splashes, snow, dirt or dust stir up generated by the vehicle in front or oncoming traffic.
- The stereo camera’s field of view is obstructed by fogging, snow, dirt, frost, dust, scratches, or smears on the windshield, or by light reflecting off the dirt, etc.
- Rain or dirt has not been fully wiped off of the windshield. There is a risk of that the stereo camera may not detect the lanes or the oncoming vehicle.
- The stereo camera’s field of view is obstructed (for example by a canoe on the roof of the vehicle).

CAUTION

Under the following conditions, Lane Departure Warning may not operate:

- Vehicle speed is approximately 30 mph (50 km/h) or less.
- The steering wheel is turned significantly to either side.
- The road grade abruptly changes (uphill or downhill).
- On a sharp curve
- The brake pedal is depressed or immediately after it is depressed.
- The turn signal is operating.
- For approximately 3 seconds after the turn signal lever has returned to its original position
- The vehicle has not returned to the inside of the lane after Lane Departure Warning has activated.

NOTE

- The following situations may cause incorrect lane detection and a faulty Lane Departure Warning to occur.
  - There are tire tracks on a wet road or snow-covered road.
  - There are boundaries between snow and asphalt, or marks from road repair, etc.
  - There are the shadows of guardrails.
  - Lane markings are drawn in double.
  - There are some lane markings left from roadwork or markings from the previous road.
- Lane Departure Warning determines when to activate the warning from various factors, such as how fast the vehicle is approaching the lane markings. Therefore, the position at which the warning is activated may vary.
- When  (Lane Departure Warning OFF indicator light) is illuminated, Lane Departure Warning will not operate.
  ⇒ Page 163

Turning on/off Lane Departure Warning

Operate the center information display to turn on/off Lane Departure Warning.
This function is turned on by selecting “All Functions” or “Warning Buzzer Only” on the “Lane Departure” screen of the EyeSight settings.
This function is turned off by selecting “Lane Departure Prevention Function Only” or “OFF” on the “Lane Departure” screen of the EyeSight settings.
⇒ Page 193

NOTE

- The on/off setting for Lane Departure Warning operates in cooperation with Lane Sway Warning.
- The on/off status of Lane Departure Warning is restored when you restart the hybrid system.

■ Lane Departure Warning OFF indicator light

This indicator light illuminates when the ignition switch is turned to the ON position, and then turns off several seconds after the hybrid system starts.
It also illuminates under the following conditions.

- The EyeSight system has a malfunction. EyeSight (EyeSight warning indicator: Yellow)
  ⇒ Page 187
- The EyeSight system has stopped temporarily. EyeSight (EyeSight temporary stop indicator: White)
  ⇒ Page 189

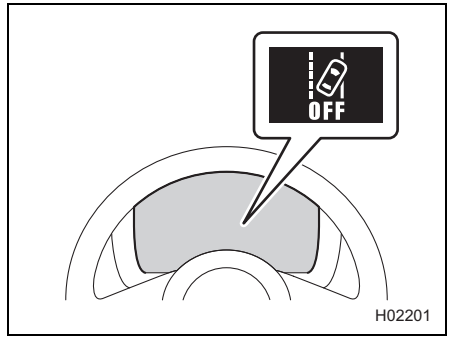

Lane Sway Warning

This function detects swaying or drifting within a lane, and warns the driver. When Lane Sway Warning activates, an alert sounds 3 short beeps and an interruption screen will be displayed.

This function activates when the vehicle speed exceeds approximately 37 mph (60 km/h) and deactivates when the vehicle speed falls below approximately 25 mph (40 km/h). The function will reactivate when the vehicle speed is increased to exceed approximately 37 mph (60 km/h).

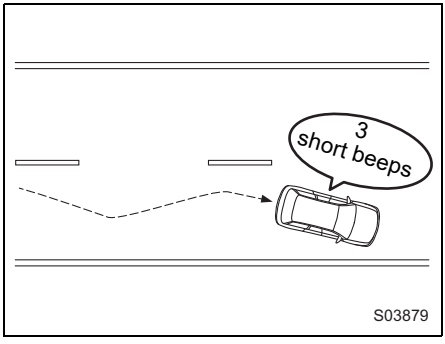



*: The lines on the right and left blink alternately.

WARNING

- Lane Sway Warning will not operate in all conditions. It also will not automatically correct swaying. If the driver relies only on Lane Sway Warning to prevent the vehicle from swaying, an accident may occur.
- The stereo camera may have difficulty detecting the lane markings under the following conditions and the system may not operate properly.
  - At night or in a tunnel without the headlights on
  - In bad weather (for example, rain, snow or thick fog)
  - The road surface is wet and shining by reflected light.
  - There are other traffic markings on the lane you are driving in (arrows, words, etc.).
  - The distance between your vehicle and the vehicle in front is short, making it difficult to detect lane markings.
  - A vehicle intruded from a neighboring lane or the vehicle in front changed lanes.

- The shape of a curve in the road suddenly changes.
- Shadows of guardrails or similar objects are overlapped on the lane markings.
- Strong light is coming from the front (sunlight or headlight beams of oncoming traffic, etc.).
- The width of a lane is either too narrow or too wide.
- The width of a lane has changed.

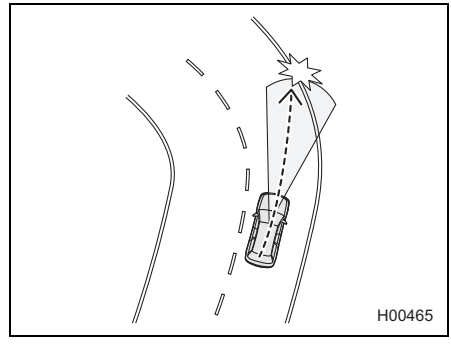

- The stereo camera may have difficulty detecting the lane due to the performance of the camera.
  - There are no lane markings or they are very worn.
  - The lane markings are painted in yellow.
  - The lane markings are similar in color to the road surface.
  - The lane markings are drawn in double.
  - The width of lane markings is narrow.
  - Lines that are not lane markings are painted on roads.
  - The lane markings are touching the walls and poles.
- The shape of lane markings suddenly changes (entrance/exit of a curve, crank and winding road, etc.).
- There is a curb or a side wall on the road shoulder.
- The brightness changes such as at a tunnel entrance or exit or when you drive under an overpass.
- Fluid has not been fully wiped off the windshield during or after washer use.

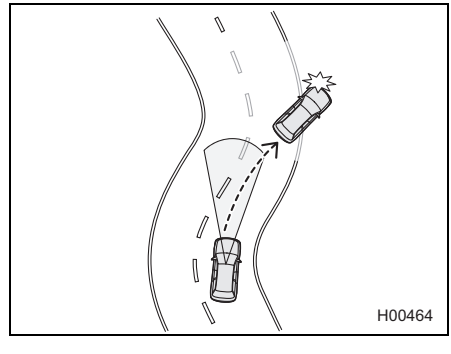

Continued on next page ⇒

⇒ Continued from previous page

- The vehicle is tilted at an extreme angle due to loaded cargo or other factors.
- Snow, puddles or snow melting agents remain on the road surface.
- Visibility is poor due to sand, smoke or water vapor blowing in the wind, or the front vision is obscured due to water splashes, snow, dirt or dust stir up generated by the vehicle in front or oncoming traffic.
- The stereo camera's field of view is obstructed by fogging, snow, dirt, frost, dust, scratches, or smears on the windshield, or by light reflecting off the dirt, etc.
- Rain or dirt has not been fully wiped off of the windshield. There is a risk of that the stereo camera may not detect the lanes or the oncoming vehicle.
- The stereo camera's field of view is obstructed (for example by a canoe on the roof of the vehicle).

⚠ CAUTION

Under the following conditions, Lane Sway Warning may not operate.

- On a winding road
- The road grade abruptly changes (uphill or downhill).
- The vehicle speed changes greatly.
- Immediately after a lane change

NOTE

- Swaying detection is based on several minutes of prior driving data. Swaying will not be detected immediately after the vehicle starts to sway. In addition, the warning may continue for some time even after swaying stops.
- Lane Sway Warning is just a function that warns the driver. When the driver is tired, not concentrating on the road or not paying adequate attention to driving, be sure to take rest breaks as often as needed.
- Under the following conditions, Lane Sway Warning will not operate.
  - Lane Centering Function is operating.
    ⇒ Page 96
  -  (Lane Departure Warning OFF indicator light) is illuminated.
    ⇒ Page 163

Turning on/off Lane Sway Warning

Operate the center information display to turn on/off Lane Sway Warning.
This function is turned on by selecting “All Functions” or “Warning Buzzer Only” on the “Lane Departure” screen of the EyeSight settings.
This function is turned off by selecting “Lane Departure Prevention Function Only” or “OFF” on the “Lane Departure” screen of the EyeSight settings.
⇒ Page 193

NOTE

- The on/off setting for Lane Sway Warning operates in cooperation with Lane Departure Warning.
- The on/off status of Lane Sway Warning is restored when you restart the hybrid system.

■ Lane Departure Warning OFF indicator light

This indicator light illuminates when the ignition switch is turned to the ON position, and then turns off several seconds after the hybrid system starts.
It also illuminates under the following conditions.

- The EyeSight system has a malfunction. EyeSight (EyeSight warning indicator: Yellow)
  ⇒ Page 187
- The EyeSight system has stopped temporarily. EyeSight (EyeSight temporary stop indicator: White)
  ⇒ Page 189

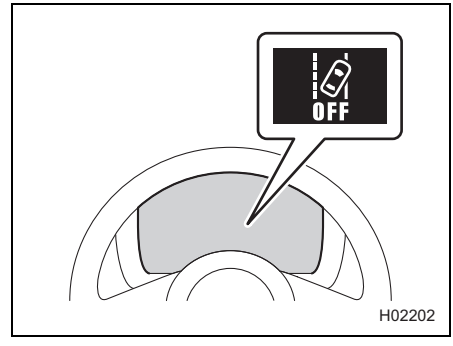

Lead Vehicle Start Alert

When the vehicle stopped in front starts to move, Lead Vehicle Start Alert notifies the driver with notification sound and an interruption screen on the combination meter display. When the vehicle in front remains stopped continuously (within a following distance of approximately 39 ft (12 m) and the driver's vehicle remains stopped for several seconds or longer), the system continues to detect the vehicle in front and this alert activates if the vehicle in front advances approximately 13 ft (4 m) or more while the driver's vehicle remains stationary.

This function only activates when the select lever is in the "D", "M" or "N" position.

When Lead Vehicle Start Alert activates, a notification sounds a two-tone beep and an interruption screen will be displayed.

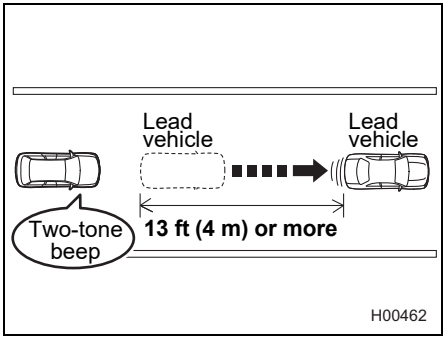

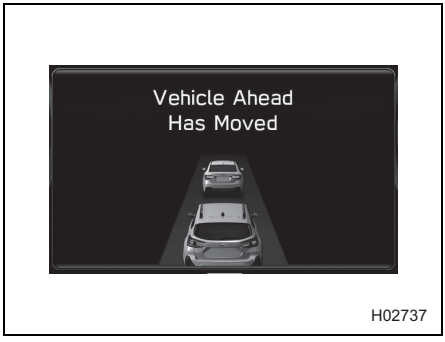

WARNING

Even after alerts are given audibly and through an interruption screen, be sure to carefully check the area surrounding the vehicle before pulling away. Relying solely on Lead Vehicle Start Alert may result in an accident.

NOTE

- The Lead Vehicle Start Alert setting can be turned on or off.
  ⇒ Page 193
- Under the following conditions, Lead Vehicle Start Alert may activate even when the vehicle in front has not started to move, or may not activate even after the vehicle in front has started to move:
  - A motorcycle or similar object cuts in between your vehicle and the stopped vehicle in front.
  - Weather or road conditions may interfere with the detection of the vehicle in front.
  - The stereo camera loses detection of the vehicle in front.
- Under the following conditions, Lead Vehicle Start Alert will not activate.
  - The EyeSight system has a malfunction. (EyeSight warning indicator: Yellow)
    ⇒ Page 187
  - The EyeSight system has stopped temporarily. (EyeSight temporary stop indicator: White)
    ⇒ Page 189

EyeSight Assist Monitor (if equipped)

The operating status of the EyeSight system is projected on the lower part of the windshield. This allows the driver to remain aware of warnings and displayed information without taking their eyes off the surrounding driving environment.

The LED indicators can be set to ON/OFF.

⇒ Page 193

For only the green indicator, the brightness can be adjusted when the illumination brightness control dial is turned. In dark surroundings, the red and yellow indicators dim according to the adjusted brightness.

⇒ Refer to the vehicle Owner's Manual for details.

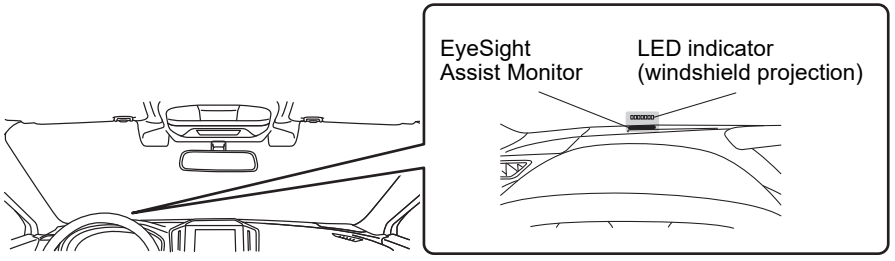

H01057

EyeSight Assist Monitor Operation

When the ignition switch is turned to the ON position, the LED indicators will illuminate in the order of Yellow → Red → Green.
When EyeSight Assist Monitor customization is turned on, they will illuminate twice.
To inform the driver of the operation condition of EyeSight while driving, the LED indicators are illuminated according to the operation condition of EyeSight and the light they emit is projected on the lower part of the windshield.

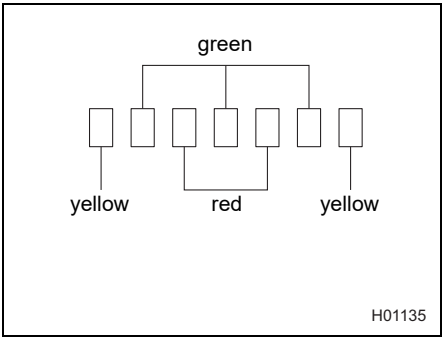

Display	Condition
Red indicators blink simultaneously (2 indicators)	• The Following Distance Warning, Pre-Collision Braking System (first braking or secondary braking), Automatic Emergency Steering, “Obstacle Detected” warning or Pre-Collision Throttle Management is operating. • Lane Centering Function was canceled when there was no operation of the steering wheel. • Emergency Stop Assist is operating.
Red indicator blinks (one side)	• Lane Centering Function is active and the vehicle is likely to depart the lane. The side where the vehicle has left its lane blinks, and the side that has not left its lane illuminates. • Emergency Lane Keep Assist activated. (When the vehicle departs the lane while detecting a nearby vehicle, the indicator blinks on the side that was crossed. The indicator on the other side illuminates.)
Yellow indicator blinks (one side)	Lane Departure Warning is operating. The side where the vehicle has left its lane blinks, and the side that has not left its lane illuminates.
Yellow indicators blink (alternately)	Lane Sway Warning is operating.

Display	Condition
Yellow indicators blink simultaneously	• Steering wheel operation is not detected for a certain period of time while Lane Centering Function or Lane Departure Prevention Function is operating. • Lane Centering Function was canceled automatically by the system (blinking rapidly). • Lane Departure Prevention Function was canceled automatically by the system (blinking rapidly). • The system detects driver inattention or that the driver has fallen asleep, or is still unable to detect the driver's state while Lane Centering Function is operating. • Driver Monitoring System has a malfunction or has stopped temporarily when Lane Centering Function is on.
Green indicator illuminates (center)	A vehicle is detected ahead while Adaptive Cruise Control is operating.
Green indicators illuminate (both sides)	Lane Centering Function is operating while keeping your eyes on the road. These two green indicators illuminate even if illumination of the green indicator is set to off in the EyeSight settings.

Conventional Cruise Control

Conventional Cruise Control is a driving support system intended to allow more comfortable driving on expressways, freeways and interstate highways. It can be used to travel at a constant speed by maintaining the vehicle speed set by the driver. Please remember that you should not exceed posted speed limits.

WARNING

- When Conventional Cruise Control is functioning, the system does not perform the following control to maintain a following distance, as when using Adaptive Cruise Control.
  Strive for safe driving and depress the brake pedal to decelerate the vehicle as necessary in order to ensure a safe following distance from the vehicle in front.
- Under the following conditions, do not use Conventional Cruise Control. Doing so may result in an accident.
  - Roads with heavy traffic or roads with sharp curves
    Maintaining an appropriate speed for such road conditions may be difficult.
  - Frozen roads, snow-covered roads or slippery road surfaces
    The tires may spin, causing your vehicle to lose control.
  - Steep downhill grades
    The set vehicle speed may be exceeded.
  - On a steep continuous downhill grade
    The brakes may overheat.
- When using Conventional Cruise Control, always set the speed according to the speed limit, traffic flow, road conditions, and other conditions.

CAUTION

When using cruise control, be sure to check the combination meter display to confirm which cruise control mode is selected: Adaptive Cruise Control or Conventional Cruise Control.

- If Adaptive Cruise Control is selected,  (Adaptive Cruise Control indicator) illuminates.
- If Conventional Cruise Control is selected,  (Conventional Cruise Control indicator) illuminates.

NOTE

- When the main cruise control is off and the (CRUISE) switch is pressed, Adaptive Cruise Control is activated.
- When the main cruise control is on, switching between Adaptive Cruise Control and Conventional Cruise Control is possible by pressing the / (Following distance setting) switch*.
  *: To switch to Conventional Cruise Control, press and hold the switch for approximately 2 seconds or longer.
- Conventional Cruise Control can be used even when EyeSight is temporarily stopped.

How to use Conventional Cruise Control

■ Setting Conventional Cruise Control

1. Setting Adaptive Cruise Control to standby status
   Press the (CRUISE) switch. At this time, (Adaptive Cruise Control indicator) (white), your vehicle indicator and the following distance setting indicator are displayed on the combination meter display.
   The set vehicle speed display will read "- - - MPH (- - - km/h)".
   When the (CRUISE) switch is pressed, the initial cruise control mode is always Adaptive Cruise Control.

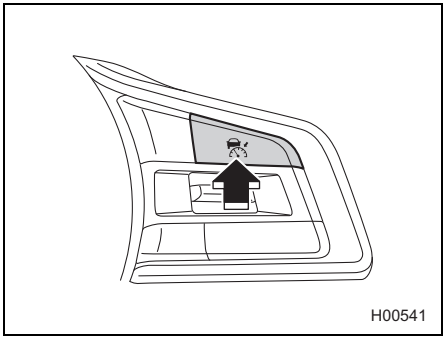
H00541

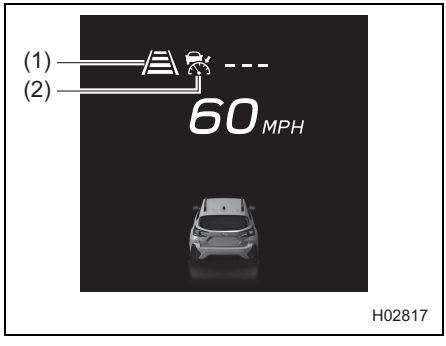

H02817

(1) Following distance setting indicator
(2) Adaptive Cruise Control indicator (white)

2. Switch to Conventional Cruise Control.
   Press and hold the / (Following distance setting) switch for approximately 2 seconds or longer to switch from Adaptive Cruise Control to Conventional Cruise Control. A notification sounds 1 short beep.
   At this time, the following distance setting indicator on the combination meter display turns off and (Conventional Cruise Control indicator) (white) is displayed.

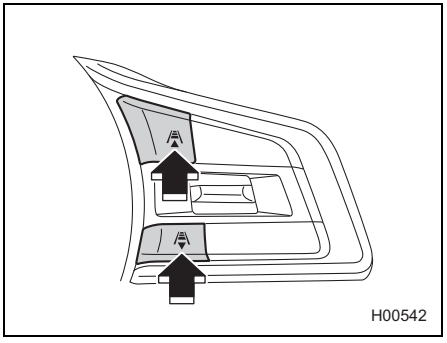

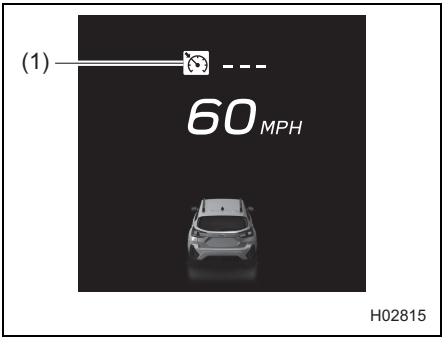

(1) Conventional Cruise Control indicator (white)

To set the ready status:
When all of the following conditions are met, READY (READY indicator) is displayed on the combination meter display, and Conventional Cruise Control can be activated.

- All doors (except the rear gate) are closed.
- The driver's seatbelt is fastened.
- The electronic parking brake is not applied. The electronic parking brake indicator light is off.
- The select lever is in the "D" or "M" position.
- Gear "1", "2" or "3" has not been selected with the shift paddles.
- The brake pedal is not depressed.
- The road is not a steep slope.
- The steering wheel has not been turned significantly in either direction.
- The X-MODE is turned off (the X-MODE indicator is off).

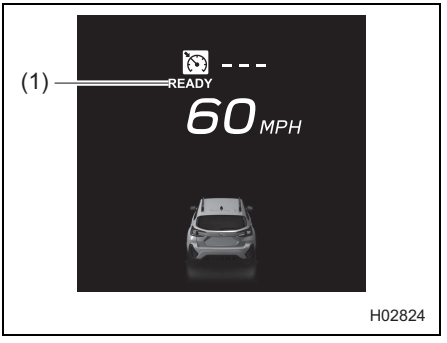

(1) READY indicator

- The vehicle speed is between approximately 20 mph (30 km/h) and 90 mph (145 km/h).
- The engine is not running at a high rpm.
- Vehicle Dynamics Control or Traction Control Function is not active.

3. Control the accelerator pedal to reach the desired speed.

4. When the vehicle reaches the desired speed, press the RES/SET switch to the “RES/+” side or the “SET/-” side.
   The vehicle speed at the time the switch is pressed becomes the set vehicle speed, and constant speed driving will initiate.

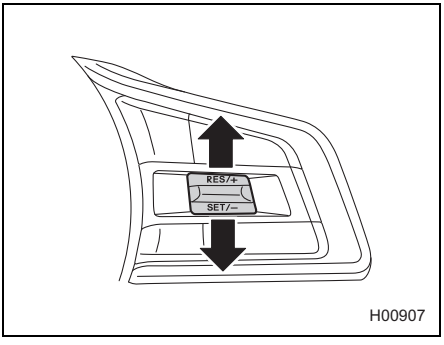

When Conventional Cruise Control is activated, READY (READY indicator) turns off, the set vehicle speed is displayed, and (Conventional Cruise Control indicator) changes from white to green.

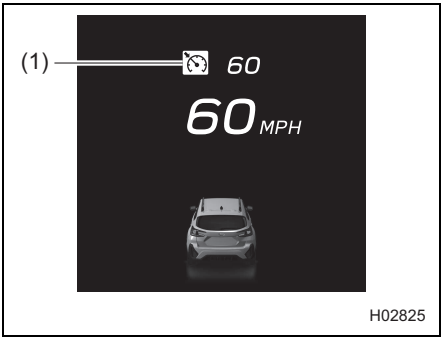

(1) Green

WARNING

- The “Obstacle Detected” warning will not activate while Conventional Cruise Control is functioning.
- When using Conventional Cruise Control, always set the speed according to the speed limit, traffic flow, road conditions, and other conditions.

CAUTION

During Conventional Cruise Control use, accelerator and brake control to follow the vehicle in front is not performed. Operate the accelerator and brake pedals as necessary.

NOTE

- On a downhill grade, automatic braking may operate in order to maintain the set vehicle speed.
- When driving on a curve, the vehicle may not accelerate, or may decelerate, even if the set vehicle speed is higher than the current vehicle speed.
- To return to Adaptive Cruise Control use, cancel Conventional Cruise Control and then briefly press the / (Following distance setting) switch. A notification sounds 1 short beep when switching to Adaptive Cruise Control.

■Increasing the set vehicle speed

●Using the RES/SET switch

- Push to the “RES/+” side briefly.
  Every time the switch is pushed, the set vehicle speed will increase in increments of 1 mph (1 km/h).
- Push to the “RES/+” side continuously.
  While the switch is being pushed, the set vehicle speed will increase in increments of 5 mph (5 km/h).

When operating the switch, the set vehicle speed changes on the combination meter display.

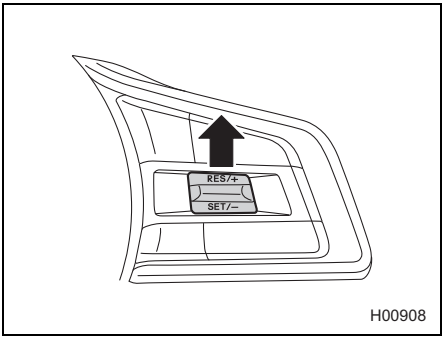

●Using the accelerator pedal

1. Depress the accelerator pedal to increase vehicle speed.
2. When the desired speed is reached, press the RES/SET switch to the “SET/-” side.
   The speed at the time of pressing the switch will be set as the new set vehicle speed, and it appears on the combination meter display.

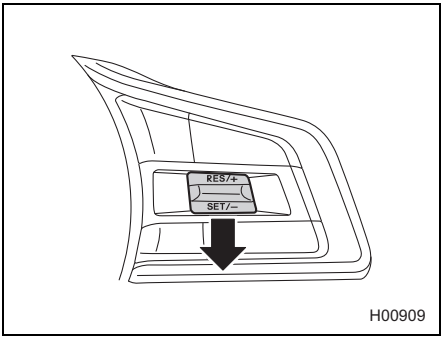

■ Decreasing the set vehicle speed

●Using the RES/SET switch

- Push to the “SET/-” side briefly.
  Every time the switch is pushed, the set vehicle speed will decrease in decrements of 1 mph (1 km/h).
- Push to the “SET/-” side continuously.
  While the switch is being pushed, the set vehicle speed will decrease in decrements of 5 mph (5 km/h).

When operating the switch, the set vehicle speed changes on the combination meter display.

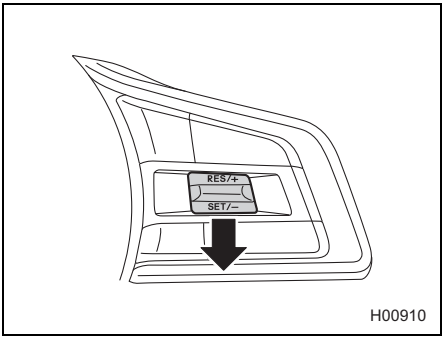

●Using the brake pedal

1. Depress the brake pedal to decrease the vehicle speed.
   Conventional Cruise Control will be canceled and (Conventional Cruise Control indicator) changes from green to white.
2. When the desired speed is reached, press the RES/SET switch to the “SET/-” side.
   The speed at the time of pressing the switch will be set as the new set vehicle speed, and it appears on the combination meter display.

■ Accelerating temporarily

Depress the accelerator pedal to accelerate temporarily.
When the accelerator pedal is released, the vehicle returns to the set vehicle speed.

■Decelerating temporarily

Depress the brake pedal to decelerate temporarily. When the brake pedal is depressed, Conventional Cruise Control will be canceled. While the set vehicle speed remains displayed on the combination meter display, (Conventional Cruise Control indicator) changes from green to white.

Release the brake pedal and press the RES/SET switch to the “RES/+” side to restore the set vehicle speed.

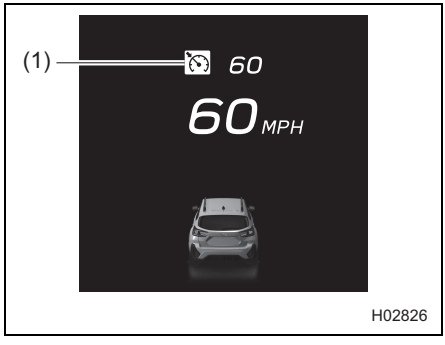

(1) White

■Canceling Conventional Cruise Control

●Canceling by driver operation

Any of the following operations will cancel Conventional Cruise Control.

(Conventional Cruise Control indicator) changes from green to white while the set vehicle speed remains displayed on the combination meter display.

- Depress the brake pedal.

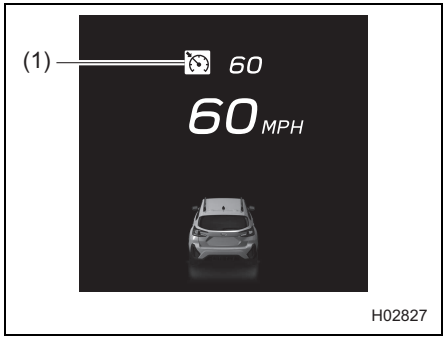

(1) White

- Press the (CRUISE) switch.

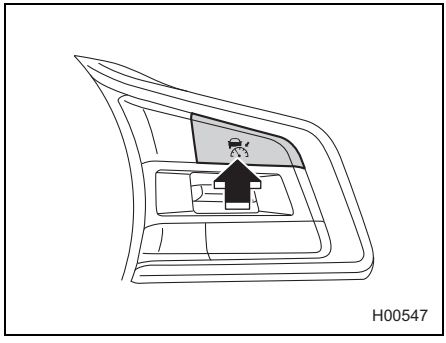

●Automatic cancellation by the system

Under the following conditions, a notification sounds 1 short beep and 1 long beep, and Conventional Cruise Control is automatically canceled. (Conventional Cruise Control indicator) changes from green to white. Also, an interruption screen is displayed on the combination meter display.

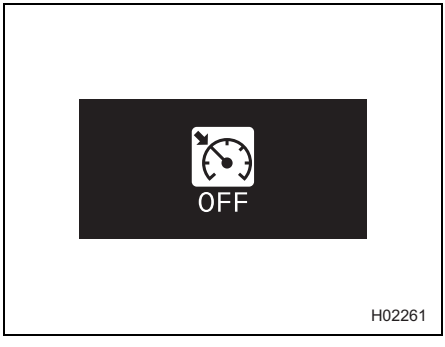

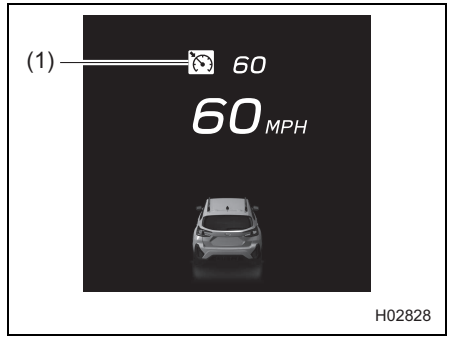

(1) White

- The select lever is moved to a position other than “D” or “M”.
- Gear “1”, “2” or “3” has been selected with the shift paddles.
- Vehicle speed drops to approximately 16 mph (25 km/h) or less (due to a steep uphill grade or some other reason).
- The X-MODE is turned on (the X-MODE indicator illuminates).
- Vehicle speed increases to approximately 100 mph (160 km/h) or more.
- Vehicle Dynamics Control or Traction Control Function is activated.
- Any door (except the rear gate) is opened.
- The driver’s seatbelt is unfastened.
- The electronic parking brake is applied.
- The EyeSight system has a malfunction. EyeSight (EyeSight warning indicator: Yellow) ⇒ Page 187
- The steering wheel is turned significantly in either direction.
- The grade of the road is very steep.
- The Pre-Collision secondary braking is activated.
- The accelerator pedal was depressed continuously for a long time.
- The engine speed increased to a high rpm.

After the conditions have been resolved, perform the Conventional Cruise Control set operation again to reactivate Conventional Cruise Control.

WARNING

Do not use Conventional Cruise Control on slippery roads. Doing so may result in an accident.

CAUTION

When the select lever is shifted to the “N” position, Conventional Cruise Control will be automatically canceled. Do not shift the select lever to the “N” position except in an emergency. Otherwise, engine braking will not be effective, which could cause an accident.

NOTE

- If EyeSight is malfunctioning, EyeSight (EyeSight warning indicator: Yellow) is displayed on the combination meter display. If this occurs, stop the vehicle in a safe location and then turn off the hybrid system and restart it. If the indicator remains illuminated after restarting the hybrid system, Conventional Cruise Control cannot be used. This will not interfere with ordinary driving. However, contact a SUBARU dealer and have the system inspected.
  ⇒ Page 187
- When operation of Conventional Cruise Control has been automatically canceled, perform the set operation again after the condition that caused the cancellation has been resolved. If Conventional Cruise Control cannot be activated even after the condition has been corrected, EyeSight may be malfunctioning. This will not interfere with ordinary driving. However, contact a SUBARU dealer and have the system inspected.

■ Restoring the previously set vehicle speed

The previously set vehicle speed is stored in memory. To restore that vehicle speed, press the RES/SET switch to the “RES/+” side. (Conventional Cruise Control indicator) changes from white to green.

You can restore the set vehicle speed when the previously set vehicle speed has been stored and the current vehicle speed is approximately 20 mph (30 km/h) or more.

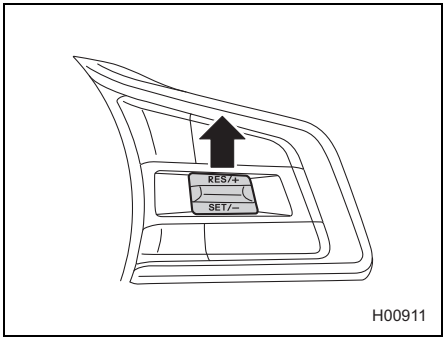

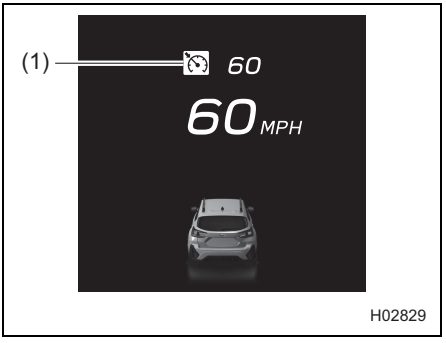

(1) Green

NOTE

- The vehicle speed stored in memory is erased in the following circumstances:
  - The cruise control is turned off by pressing the (CRUISE) switch.
  - The cruise control mode was switched from Conventional Cruise Control to Adaptive Cruise Control.
- The vehicle drives constantly and correspondingly to the set vehicle speed between 20 mph (30 km/h) and 90 mph (145 km/h).
- If there is no vehicle speed stored in the memory (previous vehicle speed), the current vehicle speed is set when the RES/SET switch is pressed to the “RES/+” side.

⇒ Page 174

■ Turning off Conventional Cruise Control

When Conventional Cruise Control is not active, press the (CRUISE) switch.
(Conventional Cruise Control indicator) and your vehicle indicator turn off on the combination meter display.

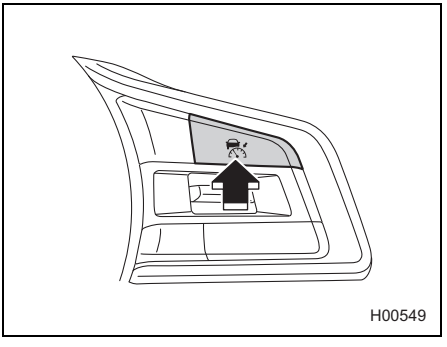

List of alert/notification sounds

Alert/notification sound	Status	Reference page
Single continuous beep	Pre-Collision Braking System: Secondary Braking is active.	⇒ Page 45
	Automatic Emergency Steering is active.	⇒ Page 50
1 short beep and 1 long beep	Adaptive Cruise Control or Conventional Cruise Control is canceled automatically.	⇒ Pages 90 and 181
	The stay-stopped function is canceled and the electronic parking brake is automatically applied.	⇒ Page 90
	Lane Centering Function or Lane Departure Prevention Function is canceled automatically.	⇒ Pages 108 and 137
1 short beep and 1 long beep (repeated)	Lane Centering Function is automatically canceled during the alert to operate the steering wheel.	⇒ Page 108
	Emergency Stop Assist (Lane centering control is not active.)	⇒ Page 115
Repeated short beeps	Pre-Collision Braking System: The following distance warning is active.	⇒ Page 45
	Pre-Collision Braking System: First Braking is active.	
	The “Obstacle Detected” warning from Adaptive Cruise Control is active.	⇒ Page 94
	Pre-Collision Throttle Management is active.	⇒ Page 151
Repeated 2 short beeps	The system does not detect steering operation by the driver for a certain period of time when Lane Centering Function is operating.	⇒ Page 108
	The system does not detect that the driver’s eyes are on the road for a certain period of time when Lane Centering Function is operating. (models with Driver Monitoring System)	⇒ Page 108

Alert/notification sound	Status	Reference page
3 short beeps	Lane Centering Function is active and the vehicle is likely to depart the lane.	⇒ Page 113
	Lane Departure Warning is active.	⇒ Page 159
	Lane Sway Warning is active.	⇒ Page 164
Repeated 3 short beeps	Emergency Lane Keep Assist is active and the vehicle has departed the lane.	⇒ Page 139
1 short beep	Either of the following occurs while Adaptive Cruise Control is activated. - A vehicle in front is detected.* - A vehicle in front is no longer detected.*	⇒ Page 75
	Adaptive Cruise Control cannot be used because Emergency Stop Assist has activated.	⇒ Page 123
	The cruise control mode (Adaptive Cruise Control ⟷ Conventional Cruise Control) is changed.	⇒ Page 174
	EyeSight is malfunctioning.	⇒ Page 187
	EyeSight operation is temporarily stopped.	⇒ Page 189
5 intermittent beeps, 1 short beep and 1 long beep	The stay-stopped function continues for approximately 10 minutes and the electronic parking brake is automatically applied.	⇒ Page 87
Two-tone beep	Lead Vehicle Start Alert is active.*	⇒ Page 168
1 beep and 1 long beep (repeated)	Emergency Stop Assist (Lane centering control is active.)	⇒ Page 115

*: The notification that indicates when a lead vehicle is detected or when it is no longer detected (Lead Vehicle Acquisition Sound), as well as Lead Vehicle Start Alert can be turned on or off.
⇒ Page 193

EyeSight malfunction and temporary stop

If a malfunction is detected in the EyeSight system, the indicators and interruption screens on the combination meter inform the driver of the malfunction. Check the displayed contents and take the appropriate action.

Malfunction (including position/angle misalignment of stereo camera)

The alert sounds 1 short beep, and Eye Sight (EyeSight warning indicator: Yellow) illuminates or blinks. An interruption screen is also displayed on the combination meter display.

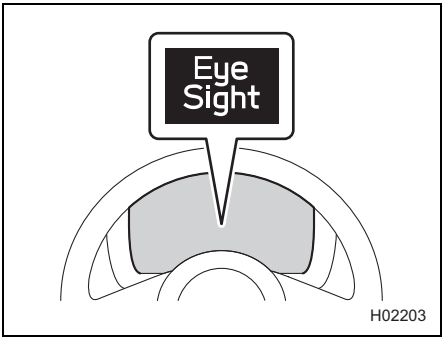

Displayed screen	Cause	Action
EyeSight Off Check Manual S03005	An EyeSight malfunction or position/angle misalignment of the stereo camera has occurred.	Inspection and adjustment is necessary. Contact a SUBARU dealer.

CAUTION

If both Eye Sight (EyeSight warning indicator: Yellow) and the CHECK ENGINE warning light/malfunction indicator light/hybrid fail lamp illuminate at the same time while driving, have your vehicle checked/repaired by a SUBARU dealer as soon as possible. EyeSight cannot be used if there is an abnormality with the hybrid system, etc.
⇒ Refer to the vehicle Owner's Manual for details.

NOTE

- If Eye Sight (EyeSight warning indicator: Yellow) is illuminating or blinking, stop the vehicle in a safe location, turn off the hybrid system and then restart it.
- If Eye Sight (EyeSight warning indicator: Yellow) continues illuminating or blinking even after the hybrid system has been restarted, the EyeSight system has a malfunction. In this case, all EyeSight functions will be stopped. Normal driving will still be possible. However, contact a SUBARU dealer for an inspection.
- If Eye Sight (EyeSight warning indicator: Yellow) illuminates or blinks, the Reverse Automatic Braking (RAB) system will not operate. (models with Reverse Automatic Braking (RAB))

Temporary stop

The alert sounds 1 short beep, and (EyeSight temporary stop indicator: White) illuminates. An interruption screen is also displayed on the combination meter display.
When the cause has been resolved, temporary stop will be canceled and the EyeSight system will automatically restart.

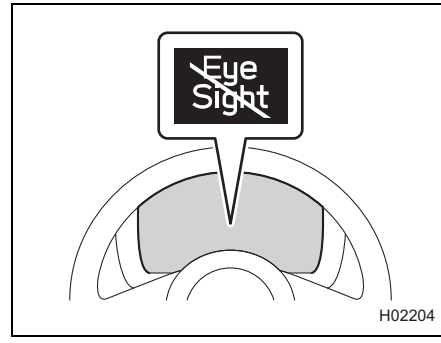

Displayed screen	Cause	Action
EyeSight Disabled No Camera View S02996	It is difficult for the stereo camera to detect objects in front. • The windshield is dirty or fogged up. • Poor weather conditions • Strong light from the front	• If the outside of the windshield in front of the stereo camera is dirty or fogged, clean the windshield. • If the inside of the windshield in front of the stereo camera is fogged, EyeSight will restart after you have driven your vehicle for a while and conditions improve. Also, the defroster may be effective in improving the conditions. ⇒ Refer to the vehicle Owner's Manual for details. • In poor weather conditions or if there is strong light from the front, EyeSight will restart after the conditions have improved and you have driven your vehicle for a while. • If the inside of the windshield in front of the stereo camera or the area around the camera lenses is dirty or constantly fogged, contact a SUBARU dealer to have the vehicle inspected.

Displayed screen	Cause	Action
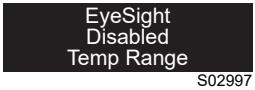 S02997	In low or high temperatures	The system will restart once the temperature is within the operational range of the EyeSight system. If the system does not restart, even when the temperature inside the vehicle is within the operational range, contact a SUBARU dealer for an inspection.
 S02998	• The EyeSight system is starting up. • The system has determined that the vehicle is extremely inclined. • The Pre-Collision secondary braking has operated 3 times after the hybrid system was started. • Hybrid READY indicator light turns off. • The electric power steering system is in the overheating prevention status because the steering wheel has been operated while the vehicle is at a standstill or driving at an extremely slow speed.	The system will restart once the cause has been resolved. At this time, it may take some time for the system to restart. If the system does not restart, even after the conditions have improved and a period of time has elapsed, contact a SUBARU dealer for an inspection.
	The Vehicle Dynamics Control warning light/Vehicle Dynamics Control operation indicator light remains illuminated if the brake pedal remains depressed after the hybrid system has been started.	The system will resume to normal operation after the brake pedal is released. If the system still does not resume, contact your SUBARU dealer for an inspection.

NOTE

- When  (EyeSight temporary stop indicator: White) is illuminated, none of the EyeSight functions can be used except for Conventional Cruise Control.
- When  (EyeSight temporary stop indicator: White) is illuminated, the Reverse Automatic Braking (RAB) system may not operate. (models with Reverse Automatic Braking (RAB))

Open Source Software information

EyeSight contains Open Source Software (OSS).
The license information and/or the source code of such OSS can be found at the following URL.

https://www.magna.com/oss

Changing settings

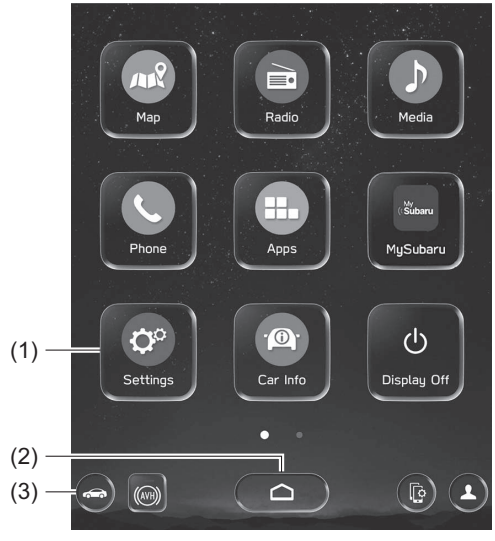

(1) Settings icon
(2) HOME icon
(3) Car settings icon

Change the EyeSight system setting as follows:
1. Touch (HOME).
2. → (Settings)
3. → “Car”
4. Select the preferred menu.

The setting adjustments to the following items can be manually changed to meet your personal requirements.

Item		Setting
EyeSight	Pre-Collision Braking	Setting ON/Setting OFF
	Forward Collision Warning	Far/ Normal/ Near
	Emergency Lane Keeping Assist	ON/OFF
	Lane Departure	All Functions/ Lane Departure Prevention Function Only/ Warning Buzzer Only/ OFF
	Cruise Control Acceleration	Eco/ Comfort/ Standard/ Dynamic
	Lead Vehicle Acquisition Sound	ON/OFF
	Lead Vehicle Moving Monitor	ON/OFF
	Select Drive on Left/Drive on Right	Right Lane/ Left Lane
EyeSight Assist Monitor*	Red Indicator	ON/OFF
	Yellow Indicator	ON/OFF
	Green Indicator	ON/OFF
Warning Volume		Min/Mid/Max

*: if equipped

Touch  (Car settings icon) to display the items that are changeable while driving.
Change the EyeSight system setting as follows:
1. Touch  (Car settings icon).
2. Select the preferred menu.

Item		Setting
Vehicle Control	Cruise Control Acceleration	Eco/ Comfort/ Standard/ Dynamic
Driving Assistance	Pre-Collision Braking	Setting ON/Setting OFF
	Forward Collision Warning	Far/ Normal/ Near
	Emergency Lane Keeping Assist	ON/OFF
	Lane Departure	All Functions/ Lane Departure Prevention Function Only/ Warning Buzzer Only/ OFF
More Settings	Warning Volume	Min/Mid/Max

Items that can be set

●Pre-Collision Braking

Pre-Collision Braking System and Pre-Collision Throttle Management can be activated (On) or deactivated (Off).

●Forward Collision Warning

The timing for when Following Distance Warning activates can be set.

- Far: Following Distance Warning activates earlier than with the Normal setting.
- Normal: This is the standard setting for Following Distance Warning.
- Near: Following Distance Warning activates later than with the Normal setting.

●Emergency Lane Keeping Assist

Emergency Lane Keep Assist can be activated (On) or deactivated (Off).

●Lane Departure

Lane Departure Prevention Function and/or the warning buzzer (Lane Departure Warning and Lane Sway Warning) can be activated (On) or deactivated (Off).

- All Functions: Activates both Lane Departure Prevention Function and the warning buzzer.
- Lane Departure Prevention Function Only: Activates Lane Departure Prevention Function only.
- Warning Buzzer Only: Activates the warning buzzer only.
- OFF: Deactivates both Lane Departure Prevention Function and the warning buzzer.

●Cruise Control Acceleration

The Cruise Control Acceleration Characteristics of Adaptive Cruise Control and Conventional Cruise Control can be set to one of four levels.

- Eco: Mode that focuses on driving with smooth movement and optimum fuel economy.
- Comfort: Mode that focuses on driving with smooth movement.
- Standard: Mode that focuses on quick response acceleration.
- Dynamic: Mode used when powerful acceleration is required.

●Lead Vehicle Acquisition Sound

The Lead Vehicle Acquisition Sound setting can be activated (On) or deactivated (Off).

●Lead Vehicle Moving Monitor

The Lead Vehicle Start Alert setting can be activated (On) or deactivated (Off).

●Select Drive on Left/Drive on Right (Driving Lane Customize)

It is possible to switch between driving on the left-hand side of the road and driving on the right-hand side.

Adaptive Cruise Control (⇒ page 66) is adapted to the set traffic lane direction.

WARNING

If the Driving Lane Customize setting does not match the flow of traffic, full EyeSight performance may not be available.

●EyeSight Assist Monitor (if equipped)

The on/off operation assigned to each EyeSight Assist Monitor LED indicator can be set for color.

⇒ Page 171

●Warning Volume

The volume can be set to Min/Mid/Max.

Message screen list

If an EyeSight warning or malfunction is detected, a message will be displayed on the combination meter display. Depending on the message, an alert/notification sounds at the same time.



H02379

If a message is displayed, refer to the message list and take the appropriate action. While the mark is illuminated, you can press the switch to display the message again.

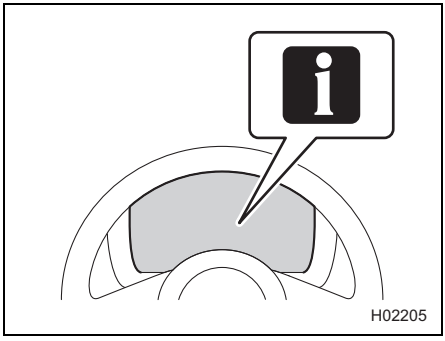
H02205

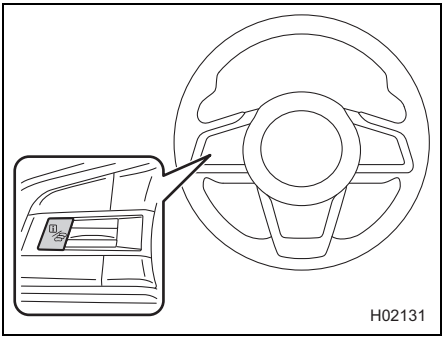
H02131

Message screen list (precautions and notices)

Displayed screen	Item	mark	Reference page
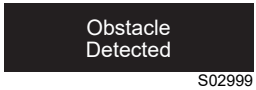 S02999	Pre-Collision Braking System	None	⇒ Page 45
	Automatic Emergency Steering	None	⇒ Page 50
	The “Obstacle Detected” warning	None	⇒ Page 94
	Pre-Collision Throttle Management	None	⇒ Page 151
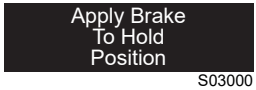 S03000	Apply Brake	None	⇒ Page 48
 S03532	Pre-Collision Braking System operation	None	⇒ Page 48
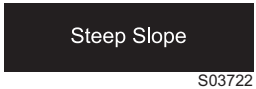 S03722	Adaptive Cruise Control/Conventional Cruise Control automatic cancellation (when the grade of the road is very steep)	None	⇒ Pages 90 and 181
 H01492	For models with Driver Monitoring System, Lane Centering Function cannot be used because Driver Monitoring System has a malfunction or has stopped temporarily.	None	⇒ Page 105

Displayed screen	Item	mark	Reference page
 H01136	For models with Driver Monitoring System, Lane Centering Function is turned on while Driver Monitoring System is off, or Driver Monitoring System is turned off while Lane Centering Function is on.	None	⇒ Page 105
 S03314	Steering operation is not detected by Lane Centering Function or Lane Departure Prevention Function.	None	⇒ Pages 108 and 137
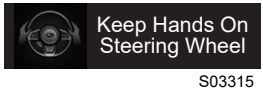 S03315	The steering wheel has not been operated for a certain period of time when Lane Centering Function is on. (The steering wheel illuminates in red.)	None	⇒ Pages 108 and 113
	Lane Centering Function is active and the vehicle is likely to depart the lane. (The steering wheel illuminates in red.)		
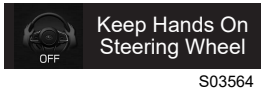 S03564	Lane Centering Function is automatically canceled during the alert to operate the steering wheel. (The steering wheel illuminates in red.)	None	⇒ Pages 108 and 113
	Lane Centering Function is canceled because the vehicle is likely to depart the lane when Lane Centering Function is active. (The steering wheel illuminates in red.)		

Displayed screen	Item	mark	Reference page
 H01491	For models with Driver Monitoring System, the steering wheel has not been operated for a certain period of time when Lane Centering Function is on. (The steering wheel illuminates in red.)	None	⇒ Page 108
	For models with Driver Monitoring System, the driver is looking away from the road when Lane Centering Function is on. (The steering wheel illuminates in red.)		
	For models with Driver Monitoring System, Driver Monitoring System does not detect the driver's state when Lane Centering Function is on. (The steering wheel illuminates in red.)		
	For models with Driver Monitoring System, Driver Monitoring System has a malfunction or has stopped temporarily when Lane Centering Function is on. (The steering wheel illuminates in red.)		
Function Unavailable Turn Engine OFF H01428	Adaptive Cruise Control cannot be used because Emergency Stop Assist has activated. (for certain models)	None	⇒ Page 123
Function Disabled Until Vehicle Restart H02863	Adaptive Cruise Control cannot be used because Emergency Stop Assist has activated. (for other models)	None	⇒ Page 123

Displayed screen	Item	mark	Reference page
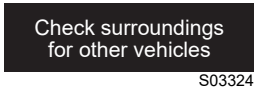 S03324	Emergency Lane Keep Assist	None	⇒ Page 147
 S03002	Lane Departure Warning	None	⇒ Page 159
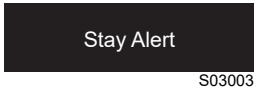 S03003	Lane Sway Warning	None	⇒ Page 164
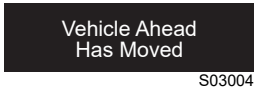 S03004	Lead Vehicle Start Alert	None	⇒ Page 168
 203196	EyeSight system automatic cancellation	None	⇒ Page 90
 S03391		None	⇒ Page 108
 H01143		None	⇒ Page 108
 S03313		None	⇒ Page 137
 203198		None	⇒ Page 181

Message screen list (malfunction, temporary stop)

Displayed screen	Item	mark	Reference page
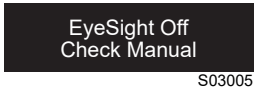 S03005	EyeSight system malfunction	Yes (yellow)	⇒ Page 187
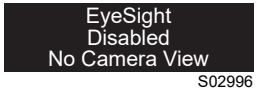 S02996	EyeSight system temporary stop	Yes (white)	⇒ Page 189
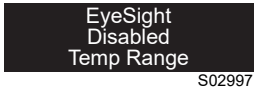 S02997		Yes (white)	
 S02998		Yes (white)	

Troubleshooting

Q	Adaptive Cruise Control cannot be activated.
A	Did you remember to press the (CRUISE) switch? If you have not pressed the (CRUISE) switch, (Adaptive Cruise Control indicator) will not be shown.
A	Is EyeSight operation temporarily stopped? When EyeSight is temporarily stopped, (EyeSight temporary stop indicator: White) is displayed on the combination meter display. Set Adaptive Cruise Control again after the cause for the temporary stop has been corrected.
A	Is READY (READY indicator) displayed? Adaptive Cruise Control cannot be activated when READY (READY indicator) is not displayed. Set Adaptive Cruise Control when READY (READY indicator) is displayed.
A	Has Emergency Stop Assist activated? Adaptive Cruise Control cannot be activated by pressing the (CRUISE) switch after Emergency Stop Assist has activated. ⇒ Page 123

Q	READY (READY indicator) is not displayed.
A	Are the requirements for setting the function met? For the conditions of READY (READY indicator) illumination, refer to the following pages. ⇒ Page 75 (Adaptive Cruise Control) ⇒ Page 174 (Conventional Cruise Control)

Q	A vehicle (in front of your vehicle) is not detected, detection is delayed or detection is lost quickly.
A	Is the vehicle in front stopped, moving slowly relative to your vehicle or moving extremely slowly? Detection of stopped vehicles, vehicle moving slowly relative to your vehicle, and vehicles moving extremely slowly may be difficult.
A	Is the windshield dirty or fogged? If the outside of the windshield in front of the stereo camera is dirty, clean the windshield. If the area around the camera lenses is dirty or if it is constantly fogged, contact a SUBARU dealer to have the vehicle inspected.
A	Is the vehicle in front far away? The maximum detection distance of the stereo camera is approximately 426 ft (130 m). Detection is not possible if the vehicle is farther away.
A	Is the vehicle on a curve? The detection range is limited in the horizontal directions when the stereo camera is properly aimed.
A	Is the vehicle on a road with repeated uphill and downhill grades (such as an overpass), or on a banked road? The detection range is limited in the vertical directions.
A	Did the vehicle detected in front change? Detection may be delayed after the vehicle in front has changed.
A	Have water, snow or other substances been kicked up by the vehicle in front as it drives? When water or snow have been kicked up, it may not be possible to detect the vehicle in front.

Q	While Adaptive Cruise Control is active, brake control is operated even though no vehicle in front has been detected.
A	Is there a vehicle in the neighboring lane? Depending on the road conditions, vehicles in neighboring lanes may be detected as well as a vehicle directly in front.
A	Are you driving on or near a curve? When driving on a curve, braking control may be activated in response to guardrails, the angle of the steering wheel, or roadside structures.

Q	Lead Vehicle Start Alert activates, even though there is no vehicle in front.
A	Depending on surrounding objects, traffic environment and weather, Lead Vehicle Start Alert may issue a warning in response to objects other than a vehicle that appears in front of your vehicle.

Q	EyeSight does not restart after a temporary stop.
A	Are you driving in the rain with poorly performing wipers or is there a smear on the windshield? Replace the wipers with new ones, or clean the smear off the windshield. Are you driving in poor weather conditions with heavy rain, snow, fog, or dust? In these cases, EyeSight may temporarily stop operating while visibility is very poor.
A	Is your vehicle subject to sunlight from the front (sunset or sunrise, etc.) or to bright headlights from oncoming vehicles at nighttime? In these cases, EyeSight may temporarily stop operating.
A	Are you parking in an extremely hot or cold condition? In either of these cases, EyeSight may temporarily stop operating until the temperature increases or decreases to a temperature at which the camera is operable.
A	Is the inside or outside of the windshield in front of the stereo camera dirty or fogged? In this case, EyeSight may temporarily stop operating. • If the outside of the windshield in front of the stereo camera is dirty or fogged, clean the windshield. • If the inside of the windshield in front of the stereo camera is fogged, EyeSight will restart after you have driven your vehicle for a while and conditions improve. Also, the defroster may be effective in improving the conditions. ⇒ Refer to the vehicle Owner's Manual for details. • If the inside of the windshield in front of the stereo camera or the area around the camera lenses is dirty or constantly fogged, contact a SUBARU dealer to have the vehicle inspected.

Q	The timing of the “Obstacle Detected” warning is sometimes earlier or sometimes later than what seems to be normal operation.
A	The “Obstacle Detected” warning sounds when the system determines that more braking is necessary, based on conditions such as the distance from the vehicle in front and the difference in speed compared to it. As a result, timing may vary depending on how the brakes are applied in relation to the vehicle in front, and your relative speed to that vehicle.

Q	When the vehicle in front has turned off the roadway or the distance from the vehicle in front has increased, acceleration is sometimes slower or faster.
A	Depending on the timing of when the detection of the vehicle in front is lost, EyeSight’s ability to react may be slower, causing the start of acceleration to feel delayed and braking time to feel longer than what seems to be normal operation.
A	What acceleration level did you select for cruise control*? Acceleration may vary because the cruise control characteristics vary depending on the selected mode. *: Adaptive Cruise Control and Conventional Cruise Control

Q	Cruise control is canceled automatically.
A	Did you perform one of the following operations? ⇒ Page 89 (Adaptive Cruise Control) ⇒ Page 180 (Conventional Cruise Control)
A	Has the EyeSight system temporarily stopped while Adaptive Cruise Control was in use?

Q	The (Lane Centering) switch was pressed however Lane Centering Function does not activate.
A	Is Adaptive Cruise Control activated? ⇒ Page 105
A	Is Pre-Collision Braking System turned on? ⇒ Page 105
A	Does the Driver Monitoring System operation indicator light (green) or Driver Monitoring System OFF indicator light illuminate? (models with Driver Monitoring System) ⇒ Page 105

Q	/ (Lane Centering indicator) does not illuminate even though the (Lane Centering) switch is pressed.
A	Is Adaptive Cruise Control turned off? / (Lane Centering indicator) does not illuminate when Adaptive Cruise Control is turned off.
A	Does the Driver Monitoring System warning light (yellow) illuminate? (models with Driver Monitoring System) ⇒ Refer to the vehicle Owner's Manual for details.

Q	Lane Centering Function and Lane Departure Prevention Function were unexpectedly canceled.
A	Did you take your hands off the steering wheel? Did you just lightly put your hands on the steering wheel while driving? If the system does not detect the steering operation of the driver, it will temporarily cancel Lane Departure Prevention Function.
A	Did you turn a tight corner? Lane Centering Function and Lane Departure Prevention Function do not operate while turning a tight corner.
A	Did you perform one of the following operations? ⇒ Page 107 (Lane Centering Function) ⇒ Page 137 (Lane Departure Prevention Function)

Q	Lane Centering Function and Lane Departure Prevention Function do not operate even though there are lane markers.
A	Is the width of the road too narrow or too wide? To operate Lane Centering Function and Lane Departure Prevention Function, the width of the road should be between approximately 10 ft (3 m) and 15 ft (4.5 m).

Q	A lead vehicle is driving ahead of my vehicle and the lead vehicle indicator is illuminated, however Lane Centering Function does not activate.
A	Is the width of the lead vehicle too narrow? Lane Centering Function does not activate when the lead vehicle is a motorcycle or another 2-wheeled vehicle, super-compact car, or other narrow vehicle.
A	Is there a speed difference between the lead vehicle and your vehicle? Or is the lead vehicle not directly in front of your vehicle? Lane Centering Function may not activate in conditions such as when there is a speed difference between the lead vehicle and your vehicle (the lead vehicle is pulling away), or when the lead vehicle is meandering or driving at the edge of the lane.

Q	When Lane Centering Function is active, the interruption screen “Keep Hands On Steering Wheel” is displayed on the combination meter display in spite of gripping the steering wheel.
A	The system may not be detecting any steering operation even though you are gripping the steering wheel. Operate the steering wheel until the interruption screen disappears. If the system continues to not detect any operation, Emergency Stop Assist activates.
A	If the vehicle is likely to depart the lane when Lane Centering Function is active, “Keep Hands On Steering Wheel” will be displayed. If Lane Centering Function is canceled in this state, “OFF” will be displayed. (⇒ page 113)

Q	When Lane Centering Function is active, the interruption screen “Keep Eyes on Road and Hands on Steering” is displayed on the combination meter display in spite of gripping the steering wheel while keeping eyes on the road. (models with Driver Monitoring System)
A	The system may not be detecting any steering operation even though you are gripping the steering wheel. Operate the steering wheel forcefully until the interruption screen disappears. If the interruption screen continues to be displayed even though you are operating the steering wheel forcefully, cancel or turn off Lane Centering Function. ⇒ Pages 107 and 113
A	Does Driver Monitoring System have a malfunction, or has it stopped temporarily? Lane Centering Function cannot be used when Driver Monitoring System has a malfunction or has stopped temporarily. For details about Driver Monitoring System, refer to the vehicle Owner’s Manual.
A	Driver Monitoring System may not detect your state even while you are keeping your eyes on the road. If the interruption screen continues to be displayed even while your eyes are on the road, cancel or turn off Lane Centering Function. ⇒ Pages 107 and 113

Q	A noise occurs when automatic braking control activates.
A	This is the sound of the automatic braking control operating - there are some mechanical components to the system, and they do occasionally make audible sounds during automatic braking control. This does not indicate a malfunction.

Q	Braking control activates frequently when driving with Adaptive Cruise Control in heavy traffic.
A	When Adaptive Cruise Control is activated, the EyeSight system performs control based on the movement of vehicles or objects in front. As a result, acceleration and deceleration may be more frequent while the system adjusts to vehicles or objects the camera system is detecting. If it is difficult to maintain a consistent following distance under certain conditions (such as in heavy traffic, poor weather or urban environments, etc.), do not use Adaptive Cruise Control.

Q	The electronic parking brake is applied automatically while the stay-stopped function is operating.
A	The electronic parking brake will be applied in the following cases. • The stay-stopped function (⇒ page 87) is continuously applied for approximately 10 minutes. • Automatic cancel conditions (⇒ page 90) have been met.

MEMO