Foreword

Congratulations on choosing a SUBARU vehicle. This Owner's Manual has all the information necessary to keep your SUBARU in excellent condition and to properly maintain the emission control system for minimizing emission pollutants. We urge you to read this manual carefully so that you may understand your vehicle and its operation. For information not found in this Owner's Manual, such as details concerning repairs or adjustments, please contact the SUBARU dealer from whom you purchased your SUBARU or the nearest SUBARU dealer.

The information, specifications and illustrations found in this manual are those in effect at the time of printing. SUBARU CORPORATION reserves the right to change specifications and designs at any time without prior notice and without incurring any obligation to make the same or similar changes on vehicles previously sold. This Owner's Manual applies to all models and covers all equipment, including factory installed options. Some explanations, therefore may be for equipment not installed in your vehicle.

Please leave this manual in the vehicle at the time of resale. The next owner will need the information found herein.

SUBARU CORPORATION, TOKYO, JAPAN

"SUBARU" and the six-star cluster design are registered trademarks of SUBARU CORPORATION.

© Copyright 2026 SUBARU CORPORATION

This manual describes the following vehicle type.

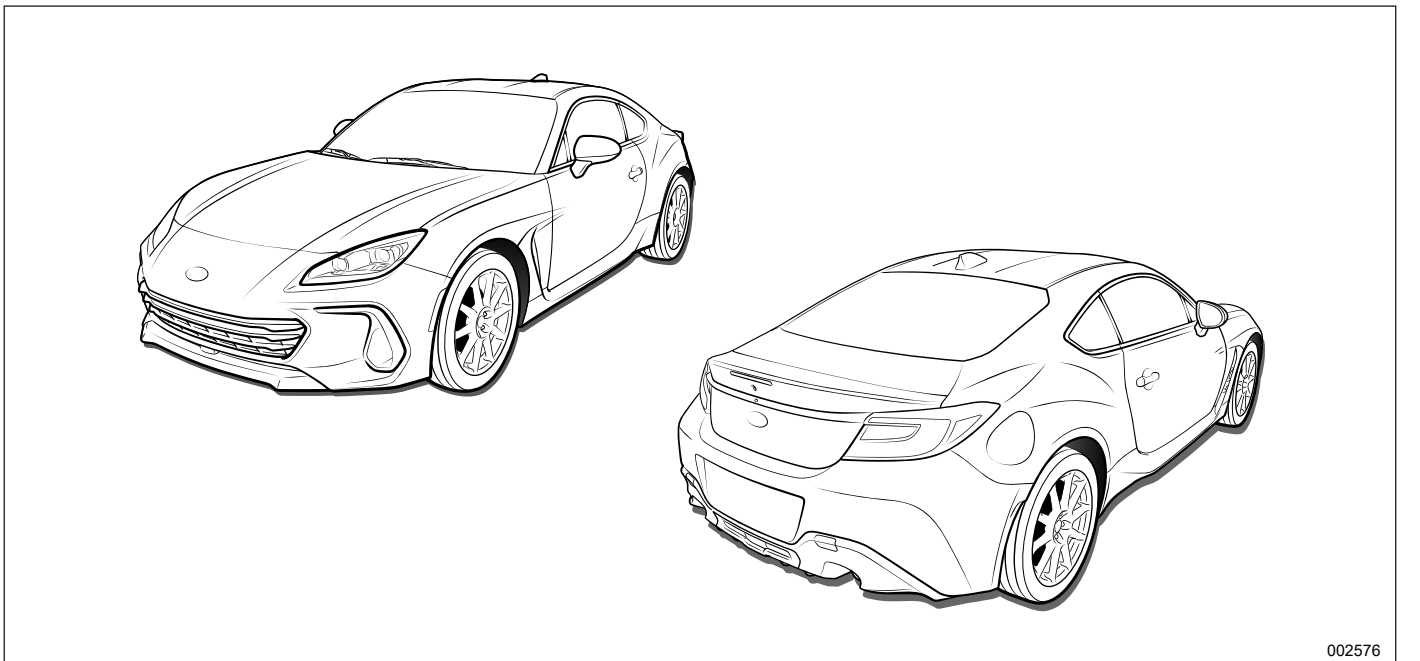

002576

Table of Contents

Introduction 1	
Illustrated Index 15	
Seat, Seatbelt and SRS Airbags 31	*Chapter 1*
Keys and Doors 95	*Chapter 2*
Instruments and Controls 127	*Chapter 3*
Climate Control 201	*Chapter 4*
Audio 213	*Chapter 5*
Interior Equipment 215	*Chapter 6*
Starting and Operating 225	*Chapter 7*
Driving Tips 297	*Chapter 8*
In Case of Emergency 309	*Chapter 9*
Appearance Care 335	*Chapter 10*
Maintenance and Service 343	*Chapter 11*
Specifications 387	*Chapter 12*
Consumer Information and Reporting Safety Defects 401	*Chapter 13*
Index 419	*Chapter 14*

- **Warranties** 2
  - Warranties for U.S.A. 2
  - Warranties for Canada 2
  - Warranties except for U.S.A. and Canada 2
- **How to Use This Owner's Manual** 2
  - Using Your Owner's Manual 2
  - Safety Warnings 3
  - Safety Symbol 4
  - Abbreviation List 4
- **Vehicle Symbols** 5
- **Safety Precautions When Driving** 5
  - Seatbelt and SRS Airbag 5
  - Child Safety 6
  - Engine Exhaust Gas (Carbon Monoxide) 7
  - Drinking and Driving 7
  - Drugs and Driving 8
  - Driving When Tired or Sleepy 8
  - Modification of Your Vehicle 8
  - Use of Cell Phones/Texting and Driving 9
  - Driving Vehicles Equipped with Audio System 9
  - Driving with Pets 9
  - Tire Pressures 9
  - Attaching Accessories 9
  - Vehicle Operation 10
- **General Information** 12
  - California Perchlorate Advisory 12
  - Noise from under the Vehicle 12
  - Vehicle Data Recording 12
  - Event Data Recorder 12

Warranties

■ Warranties for U.S.A.

SUBARU vehicles distributed by Subaru of America, Inc. and sold at retail by an authorized SUBARU dealer in the United States come with the following warranties:

- **SUBARU Limited Warranties**
- **Federal Emission Control Systems Warranties**
- **California Emissions Control Systems Warranties**

All warranty information, including applicability, details of coverage and exclusions, is in the "Warranty and Maintenance Booklet." Read these warranties carefully.

■ Warranties for Canada

SUBARU vehicles distributed by Subaru Canada, Inc. and sold at retail by an authorized SUBARU dealer in Canada come with the following warranties:

- **SUBARU Limited Warranty**
- **Emission Control System Warranty**

All warranty information, including applicability, details of coverage and exclusions, is in the "Warranty and Service Booklet." Read these warranties carefully.

■ Warranties except for U.S.A. and Canada

All warranty information, including details of coverage and exclusions, is in the "Warranty and Maintenance Booklet." Read these warranties carefully.

How to Use This Owner's Manual

■ Using Your Owner's Manual

Before you operate your vehicle, carefully read this manual. To protect yourself and extend the service life of your vehicle, follow the instructions in this manual. Failure to observe these instructions may result in serious injury and damage to your vehicle.

Each chapter in this manual begins with a brief table of contents. This will usually allow you to tell at a glance whether or not a chapter contains the information you want.

Introduction

This chapter informs you general information before driving.

Illustrated Index

This chapter informs you about the vehicle layout with illustrations.

Chapter 1: Seat, Seatbelt and SRS Airbags

This chapter informs you how to use the seat and seatbelt and contains precautions for the SRS airbags.

Chapter 2: Keys and Doors

This chapter informs you how to operate the keys, locks and windows.

Chapter 3: Instruments and Controls

This chapter informs you about the operation of instrument panel indicators and how to use the instruments and other switches.

Chapter 4: Climate Control

This chapter informs you how to operate the climate control.

Chapter 5: Audio

This chapter informs you about your audio system.

Chapter 6: Interior Equipment

This chapter informs you how to operate interior equipment.

Chapter 7: Starting and Operating

This chapter informs you how to start and operate your SUBARU.

Chapter 8: Driving Tips

This chapter informs you how to drive your SUBARU in various conditions and explains some safety tips on driving.

Chapter 9: In case of Emergency

This chapter informs you what to do if you have a problem, such as a flat tire or engine overheating.

Chapter 10: Appearance Care

This chapter informs you how to keep your SUBARU looking good.

Chapter 11: Maintenance and Service

This chapter informs you when you need to take your SUBARU to the dealer for scheduled maintenance and informs you how to keep your SUBARU running properly.

Chapter 12: Specifications

This chapter informs you about the dimensions and capacities of your SUBARU.

Chapter 13: Consumer Information and Reporting Safety Defects

This chapter informs you about Tire information, Uniform tire quality grading standards and Reporting safety defects.

Chapter 14: Index

This is an alphabetical listing of all that's in this manual. You can use it to quickly find something you want to read.

For EyeSight system:

For details about the EyeSight system, refer to the Owner's Manual supplement for the EyeSight system.

Depending on specifications, the vehicle shown in the illustrations may differ from your vehicle in terms of equipment.

■ Safety Warnings

You will find a number of WARNINGs, CAUTIONs and NOTEs in this manual.

These safety warnings alert you to potential hazards that could result in injury to you or others.

Please read these safety warnings as well as all other portions of this manual carefully in order to gain a better understanding of how to use your SUBARU vehicle safely.

⚠ WARNING

A WARNING indicates a situation in which serious injury or death could result if the warning is ignored.

⚠ CAUTION

A CAUTION indicates a situation in which injury or damage to your vehicle, or both, could result if the caution is ignored.

NOTE

A NOTE gives information or suggestions how to make better use of your vehicle.

– CONTINUED –

■ Safety Symbol

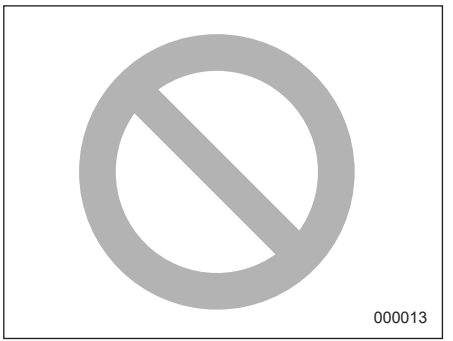

You will find a circle with a slash through it in this manual. This symbol means "Do not", "Do not do this", or "Do not let this happen", depending upon the context.

■ Abbreviation List

You may find several abbreviations in this manual. The meanings of the abbreviations are shown in the following list.

Abbreviation	Meaning
ABS	Anti-lock brake system
A/C	Air conditioner
AKI	Anti knock index
ALR	Automatic locking retractor
ALR/ELR	Automatic locking retractor/ Emergency locking retractor
AT	Automatic transmission
BSD	Blind Spot Detection
DRL	Daytime running light
EBD	Electronic brake force distribution
ELR	Emergency locking retractor
GAW	Gross axle weight
GAWR	Gross axle weight rating
GPS	Global positioning system
GVW	Gross vehicle weight
GVWR	Gross vehicle weight rating
INT	Intermittent
LATCH	Lower anchors and tethers for children
LCA	Lane Change Assist
LED	Light emitting diode
LHD	Left-hand drive
LSD	Limited Slip Differential
MIL	Malfunction indicator light
MT	Manual transmission
OBD	On-board diagnostics
RAB	Reverse Automatic Braking system
RCTA	Rear Cross Traffic Alert
RON	Research octane number
SRH	Steering Responsive Headlight
SRS	Supplemental restraint system
TFT	Thin Film Transistor
TIN	Tire identification number
TPMS	Tire pressure monitoring system
TRAC	Traction Control

Vehicle Symbols

There are some of the symbols you may see on your vehicle.

For warning and indicator lights, refer to "Table of Warning and Indicator Lights" ☞P28.

Mark	Name
	WARNING
	CAUTION
	Read these instructions carefully
	Wear eye protection
	Battery fluid contains sulfuric acid
	Keep children away
	Keep flames away
	Prevent explosions

Safety Precautions When Driving

■ Seatbelt and SRS Airbag

⚠ WARNING

- **All persons in the vehicle must fasten their seatbelts BEFORE the vehicle starts to move. Otherwise, the possibility of serious injury becomes greater in the event of a sudden stop or accident.**
- **To obtain maximum protection in the event of an accident, the driver and all passengers must always wear seatbelts when in the vehicle. The SRS (Supplemental Restraint System) airbag does not do away with the need to fasten seatbelts. Used in combination with the seatbelts, the SRS airbag offers vehicle occupants the best possible protection in the event of a serious accident.**

  Not wearing a seatbelt increases the chance of severe injury or death in a crash even when the vehicle has the SRS airbag.
- **The SRS airbags deploy with considerable speed and force. Occupants who are out of the proper position when the SRS airbag deploys could suffer very serious injuries. Because the SRS airbag needs enough space for deployment, the driver should always sit upright and well back in the seat as far from the steering wheel as practical while still maintaining full vehicle control, and the front passenger should move the seat as far back as possible and sit upright and well back in the seat.**

For instructions and precautions, carefully read the following sections.

- For the seatbelt system, refer to "Seatbelts" ☞P41.
- For the SRS airbag system, refer to "SRS Airbag (Supplemental Restraint System Airbag)" ☞P62.

– CONTINUED –

■ Child Safety

⚠ WARNING

- **Never hold a child on your lap or in your arms while the vehicle is moving. The passenger cannot protect the child from injury in a collision, because the child will be caught between the passenger and objects inside the vehicle.**
- **While riding in the vehicle, infants and small children should always be seated in the REAR seat in an infant or child restraint system which is appropriate for the child's age, height and weight. If a child is too big for a child restraint system, the child should sit in the REAR seat and be restrained using the seatbelts. According to accident statistics, children are safer when properly restrained in the rear seating positions than in the front seating positions. Never allow a child to stand up or kneel on the seat.**
- **Place children in the REAR seat properly restrained at all times in a child restraint system or in a seatbelt. The SRS airbag deploys with considerable speed and force and can injure or even kill children, especially if they are not restrained or improperly restrained. Because children are lighter and weaker than adults, their risk of being injured from deployment is greater.**
- **NEVER INSTALL A CHILD RESTRAINT SYSTEM IN THE FRONT PASSENGER'S SEAT. DOING SO RISKS SERIOUS INJURY OR DEATH TO THE CHILD BY PLACING THE CHILD'S HEAD TOO CLOSE TO THE SRS AIRBAG.**
- **Always lock the passengers' windows using the lock switch when children are riding in the vehicle. Failure to follow this procedure could result in injury to a child operating the power window. Refer to "Windows" ☞P119.**
- **Never leave unattended children, adults or animals in the vehicle. They could accidentally injure themselves or others through inadvertent operation of the vehicle. Also, on hot or sunny days, temperature in a closed vehicle could quickly become high enough to cause severe or possibly fatal injuries to them.**
- **Help prevent children, adults or animals from locking themselves in the trunk. On hot or sunny days, the temperature in the trunk could quickly become high enough to cause death or serious heat-related injuries including brain damage to anyone locked inside, particularly for small children.**
- **When leaving the vehicle, close all windows and lock all doors. Also make certain that the trunk is closed.**

- **Put children aged 12 and under or 1.5 m (4 feet 11 inches) tall or less in the REAR seat properly restrained at all times in a child restraint system or in a seatbelt. The SRS airbag deploys with considerable speed and force and can injure or even kill children, especially if they are 12 years of age and under or 1.5 m (4 feet 11 inches) tall or less and are not restrained or improperly restrained. Because children are lighter and weaker than adults, their risk of being injured from deployment is greater.**

For instructions and precautions, carefully read the following sections.

- For the seatbelt system, refer to "Seatbelts" ☞P41.
- For the child restraint system, refer to "Child Restraint Systems" ☞P48.
- For the SRS airbag system, refer to "SRS Airbag (Supplemental Restraint System Airbag)" ☞P62.

■ Engine Exhaust Gas (Carbon Monoxide)

⚠ WARNING

- **Never inhale engine exhaust gas. Engine exhaust gas contains carbon monoxide, a colorless and odorless gas which is dangerous, or even lethal, if inhaled.**
- **Always properly maintain the engine exhaust system to prevent engine exhaust gas from entering the vehicle.**
- **Never run the engine in a closed space, such as a garage, except for the brief time needed to drive the vehicle in or out of it.**
- **Avoid remaining in a parked vehicle for a long time while the engine is running. If that is unavoidable, then use the ventilation fan to force fresh air into the vehicle.**
- **Always keep the front ventilator inlet grille free from snow, leaves or other obstructions to ensure that the ventilation system always works properly.**
- **If at any time you suspect that exhaust fumes are entering the vehicle, have the problem checked and corrected as soon as possible. If you must drive under these conditions, drive only with all windows fully open.**
- **Keep the trunk lid closed while driving to prevent exhaust gas from entering the vehicle.**

■ Drinking and Driving

⚠ WARNING

Drinking and then driving is very dangerous. Alcohol in the bloodstream delays your reaction and impairs your perception, judgment and attentiveness. If you drive after drinking even if you drink just a little it will increase the risk of being involved in a serious or fatal accident, injuring or killing yourself, your passengers and others. In addition, if you are injured in the accident, alcohol may increase the severity of that injury.

Please don't drink and drive.

– CONTINUED –

Drunken driving is one of the most frequent causes of accidents. Since alcohol affects all people differently, you may have consumed too much alcohol to drive safely even if the level of alcohol in your blood is below the legal limit. The safest thing you can do is never drink and drive. However if you have no choice but to drive, stop drinking and sober up completely before getting behind the wheel.

■ Drugs and Driving

⚠ WARNING

There are some drugs (over the counter and prescription) that can delay your reaction time and impair your perception, judgment and attentiveness. If you drive after taking them, it may increase your, your passengers' and other persons' risk of being involved in a serious or fatal accident.

If you are taking any drugs, check with your doctor or pharmacist or read the literature that accompanies the medication to determine if the drug you are taking can impair your driving ability. Do not drive after taking any medications that can make you drowsy or otherwise affect your ability to safely operate a motor vehicle. If you have a medical condition that requires you to take drugs, please consult with your doctor.

Never drive if you are under the influence of any illicit mind-altering drugs. For your own health and well-being, we urge you not to take illegal drugs in the first place and to seek treatment if you are addicted to those drugs.

■ Driving When Tired or Sleepy

⚠ WARNING

When you are tired or sleepy, your reaction will be delayed and your perception, judgment and attentiveness will be impaired. If you drive when tired or sleepy, your, your passengers' and other persons' chances of being involved in a serious accident may increase.

Please do not continue to drive but instead find a safe place to rest if you are tired or sleepy. On long trips, you should make periodic rest stops to refresh yourself before continuing on your journey. When possible, you should share the driving with others.

■ Modification of Your Vehicle

⚠ WARNING

Do not remove the genuine SUBARU audio system. Doing so could cause the following functions to be inoperable.

- **Combination meter display (color TFT)**
- **Rear view image and help lines**
- **Vehicle settings**
- **Clock**

⚠ CAUTION

Your vehicle should not be modified other than with genuine SUBARU parts and accessories. Other types of modifications could affect its performance, safety or durability, and may even violate governmental regulations. In addition, damage or performance problems resulting from modification may not be covered under warranties.

■ Use of Cell Phones/Texting and Driving

⚠ CAUTION

Do not talk on a cell phone or text while driving; it may distract your attention from driving and lead to an accident. If you use a cell phone to talk or text, first pull off the road and park in a safe place. In some States/Provinces, it may be lawful to talk on a phone while driving, but only if the phone is hands-free.

■ Driving Vehicles Equipped with Audio System

⚠ WARNING

Do not allow the monitor to distract your attention from driving. Also, do not operate the controls of the audio system while driving. The loss of attention to driving could lead to an accident. If you wish to operate the controls of the audio system, first take the vehicle off the road and stop it in a safe location.

■ Driving with Pets

Unrestrained pets can interfere with your driving and distract your attention from driving. In a collision or sudden stop, unrestrained pets or cages can be thrown around inside the vehicle and hurt you or your passengers. Besides, the pets can be hurt under these situations. It is also for their own safety that pets should be properly restrained in your vehicle. Restrain a pet with a special traveling harness which can be secured to the rear seat with a seatbelt or use a pet carrier which can be secured to the rear seat by routing a seatbelt through the carrier's handle. Never restrain pets or pet carriers in the front passenger's seat. For further information, consult your veterinarian, local animal protection society or pet shop.

■ Tire Pressures

Check and, if necessary, adjust the pressure of each tire at least once a month and before any long journey.

Check the tire pressure when the tires are cold. Use a pressure gauge to adjust the tire pressures to the values shown on the tire inflation pressure label. For detailed information, refer to "Tires and Wheels" ☞P364.

⚠ WARNING

Driving at high speeds with excessively low tire pressures can cause the tires to deform severely and to rapidly become hot. A sharp increase in temperature could cause tread separation, and destruction of the tires. The resulting loss of vehicle control could lead to an accident.

■ Attaching Accessories

⚠ WARNING

- **Do not attach any accessories, labels or stickers (other than properly placed inspection stickers) to the windshield. Such items may obstruct your view.**
- **If it is necessary to attach an accessory (such as an electronic toll collection (ETC) device or security pass) to the windshield, consult your SUBARU dealer for details on the proper location.**

– CONTINUED –

- Do not connect any unauthorized accessories or devices to the data link connector (OBDII port). This connector should be used only with compatible diagnostic devices for inspection and maintenance by an authorized service technician using authorized service tools. Connecting unauthorized devices, such as a driver-behavior tracking device, may adversely affect vehicle systems, including safety systems, or allow others to access information stored in your vehicle. The use of unauthorized devices may also cause unexpected malfunctions, such as a drained battery, or may damage vehicle systems. The manufacturer's warranty will not cover any part that malfunctions, fails, or is damaged due to the use of an unauthorized device with the data link connector.

■ Vehicle Operation

▼ Before leaving vehicle unattended

⚠ CAUTION

Always lock your vehicle and carry your access key fob with you.
There is a risk for vehicle theft or unauthorized persons tampering with the vehicle or installing malicious electronic devices.

▼ Key number plate storage

NOTE

- The key number is required when repairing the vehicle or making a spare access key fob. If you lose the plate with these numbers stamped on it, you will not be able to make a spare access key fob. To prevent it from being stolen, do not leave it in the vehicle and store it in a safe place. Refer to "Keyless Access with Push-Button Start System" ☞P96.
- If you lose your key, we recommend that you delete the lost access key fob registration to prevent theft. Only a SUBARU dealer can delete key fob registration. We recommend that you consult your SUBARU dealer. Refer to "Key Replacement" ☞P110.

▼ Vehicle modifications

⚠ WARNING

- Do not install parts, make custom adjustments or perform wiring or other operations that are not suitable for the vehicle.
- Do not connect accessories to the vehicle wiring or connectors unless they are genuine SUBARU products. SUBARU's vehicle warranty does not cover any malfunctions resulting from connecting the vehicle to products other than those specified.
- It may be illegal to modify the vehicle by installing parts other than genuine SUBARU parts. Consult your SUBARU dealer about the kinds of parts (tires, wheels, mufflers, etc.) you can legally install on your vehicle.

▼ Device installation

⚠ WARNING

Connecting devices that are not intended to be used in the vehicle or in a particular connector can adversely affect the vehicle system or cause the battery to discharge. It may also cause personal information leaks or unauthorized remote operation of vehicle features, resulting in unforeseen complications. Any complication caused by connecting a device other than one intended to be used in the vehicle is not covered by the manufacturer's warranty. SUBARU also bears no responsibility for any such complication.

- **The vehicle trouble diagnosis connector should only be used to connect the vehicle data link connector (OBDII) for inspection and maintenance purposes.**
- **Use the USB port only for data communication with your vehicle and for device charging.**

▼ Suspicious device handling

⚠ WARNING

If you find an unrecognized device on your vehicle, consult your SUBARU dealer immediately.

Any problem or safety risk due to the connection of an unauthorized device is not covered by the manufacturer's warranty. SUBARU also bears no responsibility for any such cause.

▼ Deleting personal information from vehicle

⚠ CAUTION

When transferring ownership of your vehicle, delete the personal information registered in the vehicle by performing a Factory Data Reset. For details about the Factory Data Reset, refer to the Owner's Manual supplement for the audio and navigation system.

Note that certain personal information inputted in the Head Unit and the phone number of any paired device will remain in vehicle data logs even after the Factory Data Reset. These data logs are strictly for quality assurance purposes and not viewable by any subsequent purchaser. To have those logs deleted permanently from the vehicle, please contact your SUBARU dealer.

General Information

■ California Perchlorate Advisory

Certain vehicle components, such as airbag modules, seatbelt pretensioners and keyless entry transmitter batteries, may contain perchlorate material. Special handling may apply for service or vehicle end of life disposal. See www.dtsc.ca.gov/hazardouswaste/perchlorate.

■ Noise from under the Vehicle

NOTE

You may hear a noise from under the vehicle approximately 5 to 10 hours after the ignition switch is turned to the "OFF" position. However, this does not indicate a malfunction. This noise is caused by the operation of the fuel evaporation leakage checking system and the operation is normal. The noise will stop after approximately 15 minutes.

■ Vehicle Data Recording

The vehicle is equipped with sophisticated computers that will record certain data, such as:

- Vehicle speed
- Engine speed
- Engine control information
- Shift state information
- Driving information, etc.

▼ Data usage

SUBARU may use the data recorded in this computer to diagnose malfunctions, conduct research and development, and improve quality.

SUBARU will not disclose the recorded data to a third party except:

- With the consent of the vehicle owner or with the consent of the lessee if the vehicle is leased
- In response to an official request by the police, a court of law or a government agency
- For use by SUBARU in a lawsuit
- For research purposes where the data is not tied to a specific vehicle or vehicle owner

■ Event Data Recorder

This vehicle is equipped with an event data recorder (EDR). The main purpose of an EDR is to record, in certain crash or near crash-like situations, such as an air bag deployment or hitting a road obstacle, data that will assist in understanding how a vehicle's systems performed. The EDR is designed to record data related to vehicle dynamics and safety systems for a short period of time, typically 30 seconds or less. The EDR in this vehicle is designed to record such data as:

- How various systems in your vehicle were operating;
- Whether or not the driver and passenger safety belts were buckled/fastened;
- How far (if at all) the driver was depressing the accelerator and/or brake pedal; and,
- How fast the vehicle was traveling.

These data can help provide a better understanding of the circumstances in which crashes and injuries occur. NOTE: EDR data are recorded by your vehicle only if a non-trivial crash situation occurs; no data are recorded by the EDR under normal driving conditions and no personal data (e.g., name, gender, age, and crash location) are recorded. However, other parties, such as law enforcement, could

combine the EDR data with the type of personally identifying data routinely acquired during a crash investigation.

To read data recorded by an EDR, special equipment is required, and access to the vehicle or the EDR is needed. In addition to the vehicle manufacturer, other parties, such as law enforcement, that have the special equipment, can read the information if they have access to the vehicle or the EDR.

- Exterior 16
- Interior.....18
- Instrument Panel.....21
- Steering Wheel 22
- Light Control and Wiper Control Levers/ Switches 23
- Combination Meter.....24
  - U.S. Spec. Models (Normal mode) 24
  - U.S. Spec. Models (TRACK mode) 25
  - Except U.S. Spec. Models (Normal mode)..... 26
  - Except U.S. Spec. Models (TRACK mode) 27
- Table of Warning and Indicator Lights.....28

Exterior

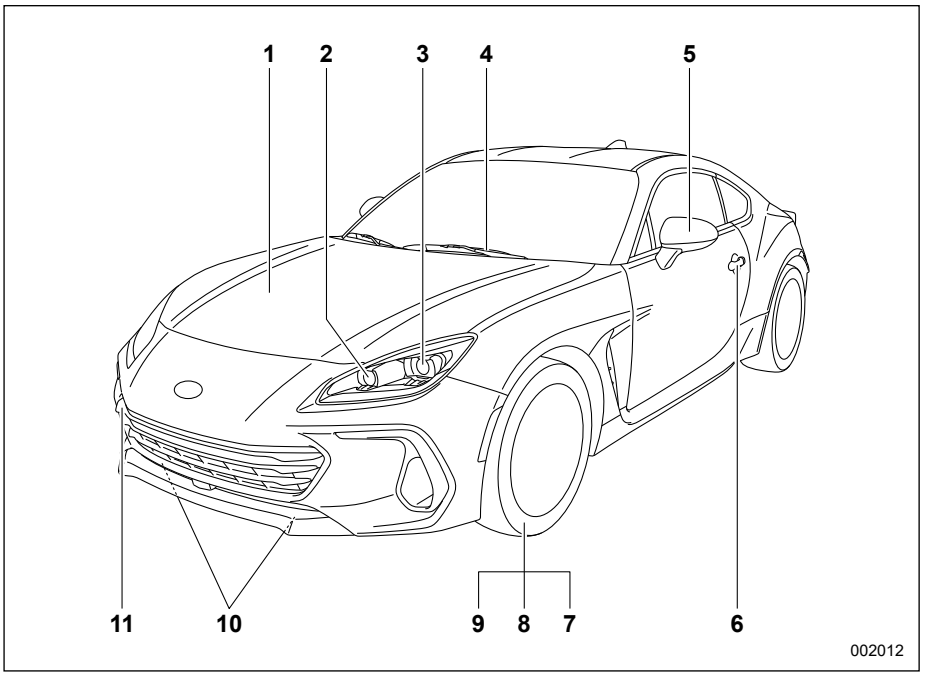

1) Engine hood (page 349)
2) Turn signal lights (page 186, 382)
3) Lights (page 178, 382)
4) Wipers (page 188)
5) Outside mirrors (page 198)
6) Door locks (page 113)
7) Tire pressure (page 367)
8) Flat tires (page 311)
9) Tire chains (page 305)
10) Tie-down hooks (page 324)
11) Towing hook (page 324)

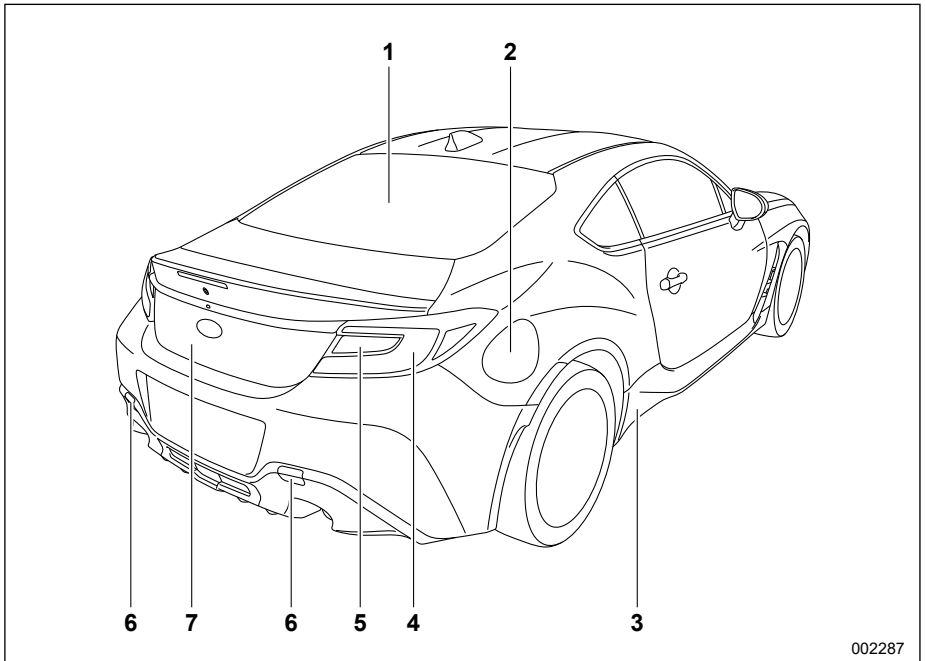

1) Rear window defogger (page 189)
2) Fuel filler lid and cap (page 228)
3) Tie-down holes (page 324)
4) Lights (page 178, 382)
5) Turn signal lights (page 186, 382)
6) Towing hooks (page 324)
7) Trunk lid (page 122)

Interior

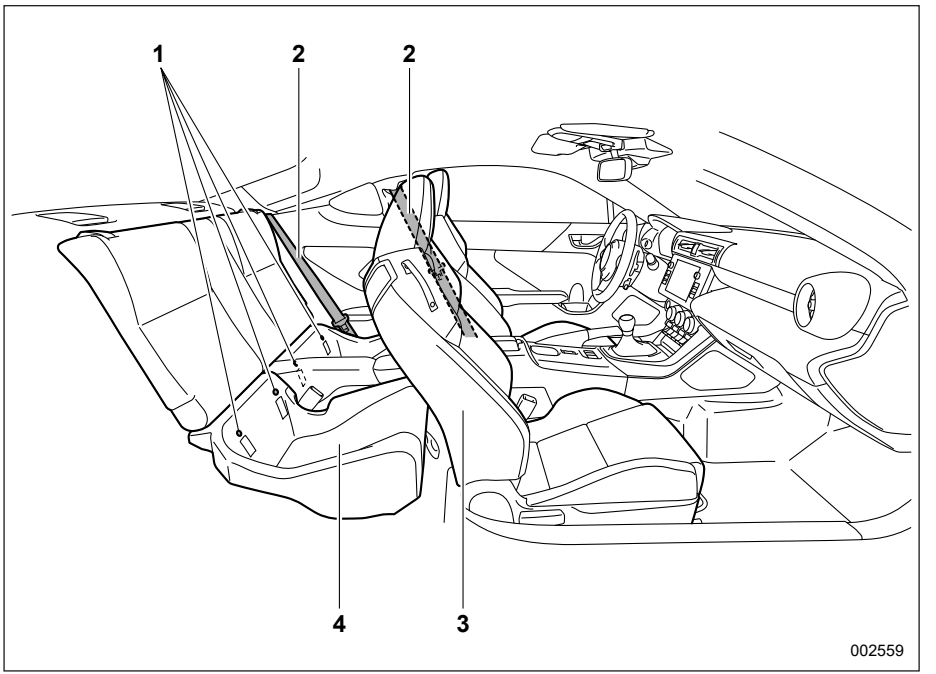

1) Lower anchorages for child restraint system (page 57)
2) Seatbelts (page 41)
3) Front seats (page 32)
4) Rear seats (page 39)

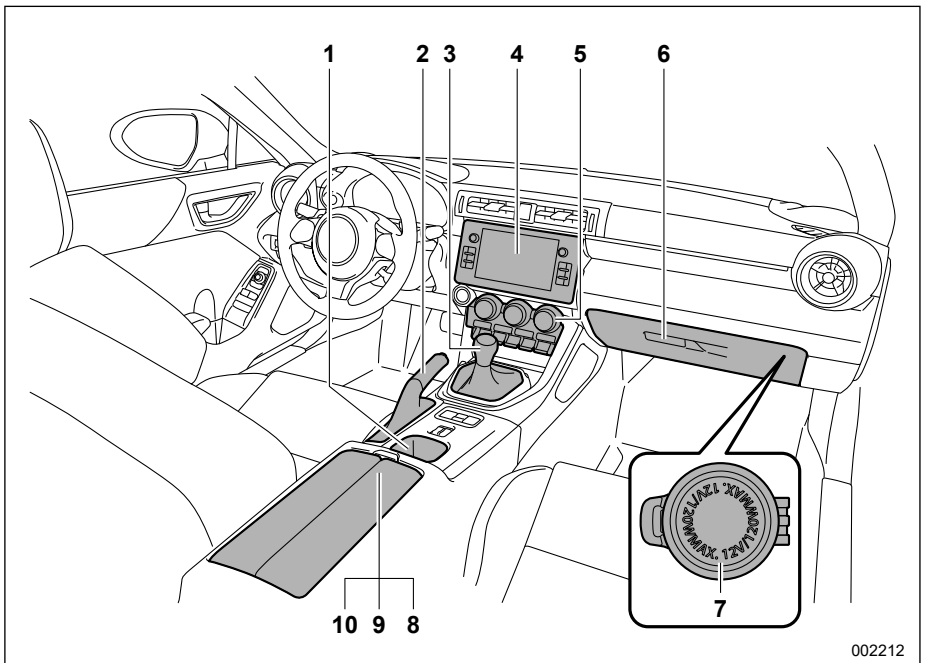

1) Cup holder and console tray (AT models) (page 218)
2) Parking brake lever (page 261)
3) Shift lever (MT models)/Select lever (AT models) (page 238, 241)
4) Center information display (page164)/ Audio system*
5) Climate control (page 202)
6) Glove box (page 218)
7) Accessory power outlet (page 219)
8) Center console (page 218)
9) Cup holder and console tray (page 218)
10) USB power supply (page 220)

*: For details about how to use the audio system, refer to the separate audio Owner's Manual.

– CONTINUED –

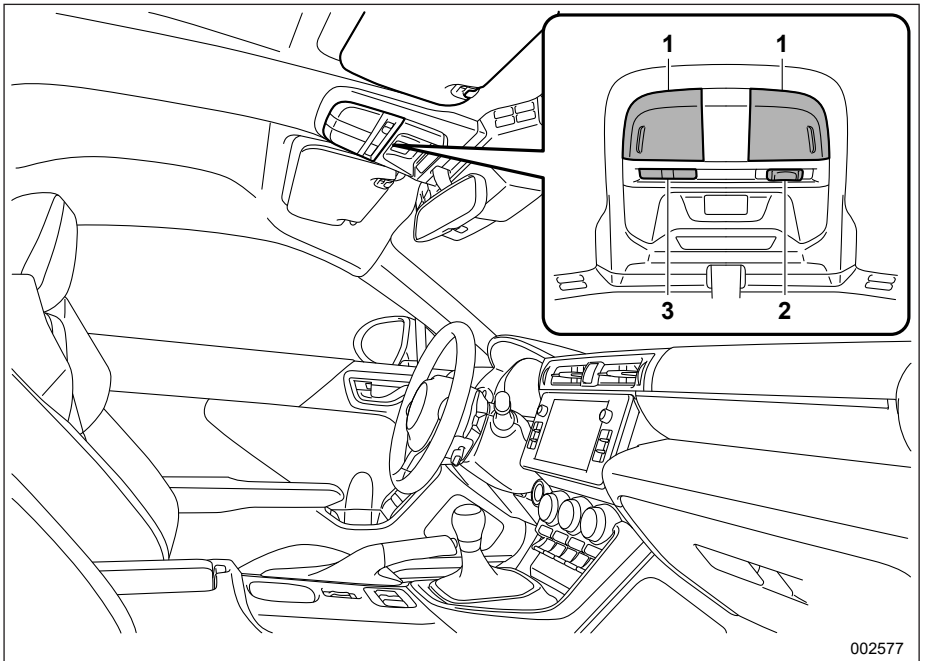

1) Map light switches (page 216)
2) Door interlock switch (page 216)
3) Buttons for SUBARU STARLINK

NOTE

For models with SUBARU STARLINK: Refer to the Owner's Manual supplement for SUBARU STARLINK.

Instrument Panel

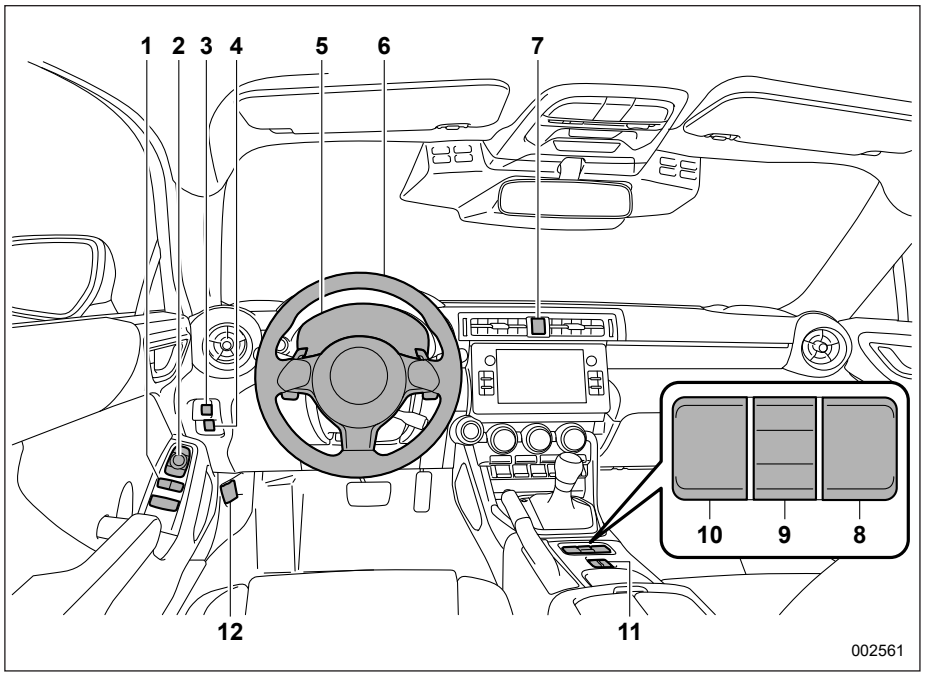

1) Power window switches (page 119)
2) Remote control mirror switch (page 198)
3) Illumination brightness control dial (page 134)
4) Trunk lid opener button (page 123)
5) Combination meter (page 131)
6) Tilt/Telescopic steering (page 199)
7) Hazard warning flasher switch (page 131)
8) “TRACK” button (page 256)
9) Driving mode select switch (page 246)
10) Vehicle Stability Control (VSC) OFF switch (page 254)
11) Seat heater switches (page 37)
12) Hood release knob (page 349)

Steering Wheel

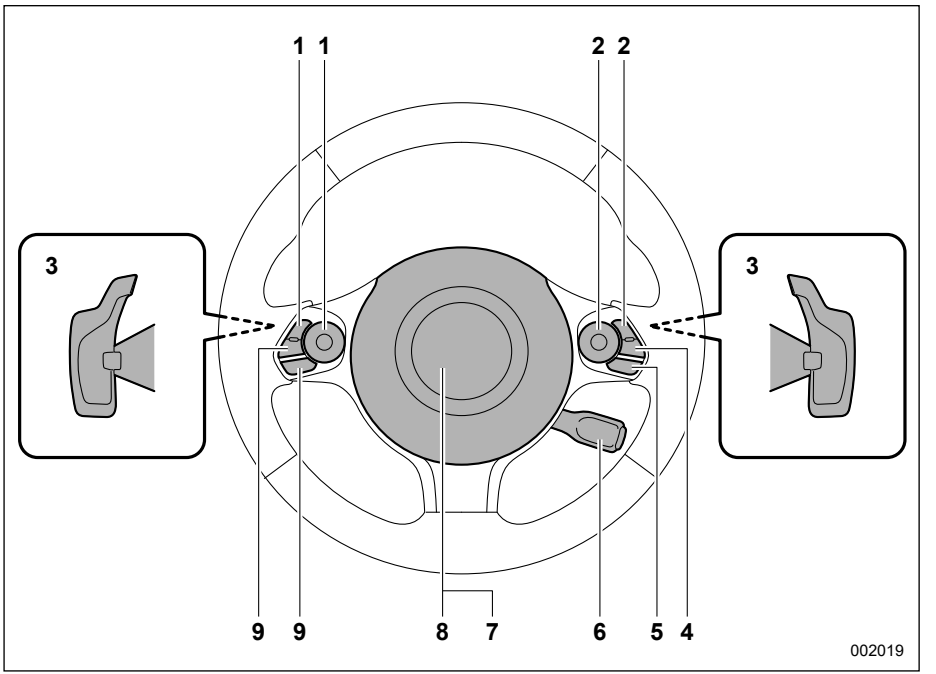

1) Audio control switches*1
2) Control switches for combination meter display (color TFT) (page 156)
3) Shift paddles (AT models) (page 244)
4) Following distance setting switch*2
5) Talk switch for voice command system*1
6) Cruise control switch*2
7) SRS airbag (page 62)
8) Horn (page 199)
9) Hands-free phone switches*1

*1: For details about how to use the switches, refer to the separate audio Owner's Manual.
*2: For details about how to use the switches, refer to the Owner's Manual supplement for the EyeSight system.

Light Control and Wiper Control Levers/Switches

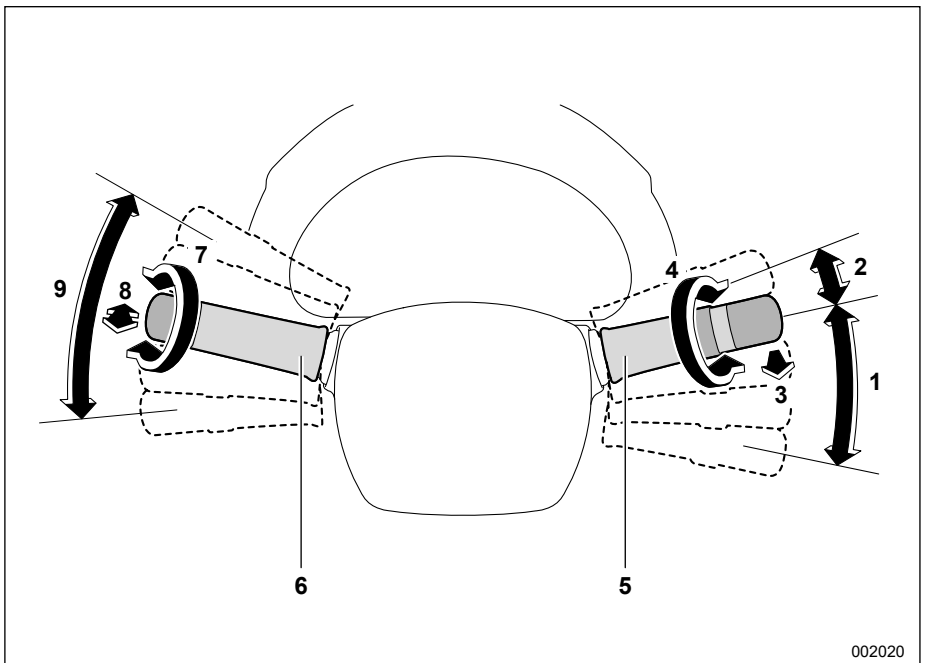

1) Windshield wiper (page 187)
2) Mist (page 188)
3) Windshield washer (page 189)
4) Wiper intermittent time control switch (page 188)
5) Wiper control lever (page 188)
6) Light control switch (page 178)
7) Headlight ON/OFF/AUTO (page 178)
8) Headlight flasher High/Low beam change (page 180)
9) Turn signal lever (page 186)

Combination Meter

■ U.S. Spec. Models (Normal mode)

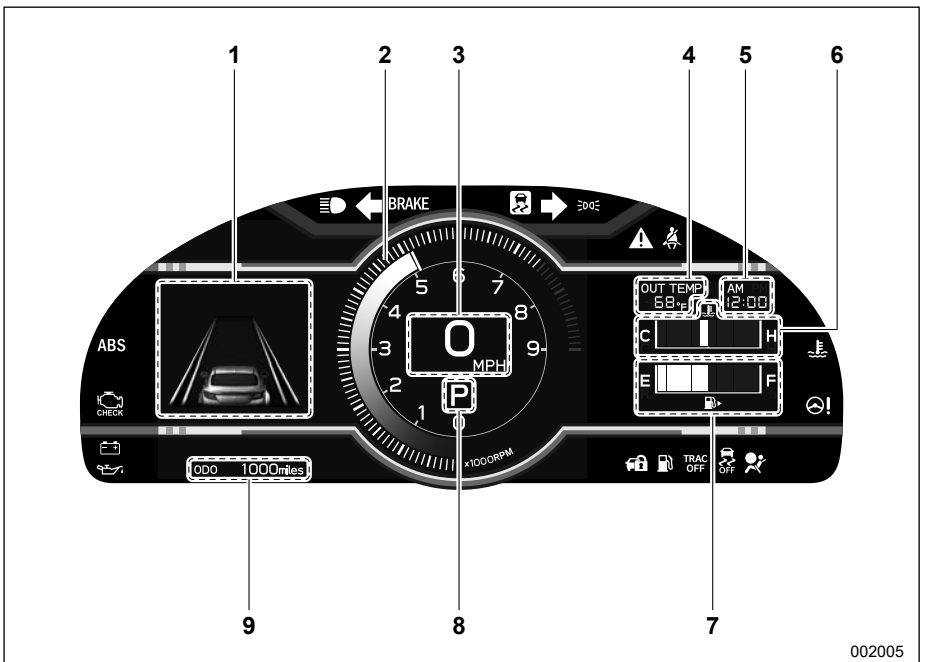

1) Combination meter display (color TFT) (page 155)
2) Tachometer (page 131)
3) Speedometer (page 131)
4) Outside temperature (page 133)
5) Clock (page 176)
6) Engine coolant temperature gauge (page 133)
7) Fuel gauge (page 133)
8) Select lever/gear position indicator (page 153)
9) Trip meter and odometer (page 132)

■ U.S. Spec. Models (TRACK mode)

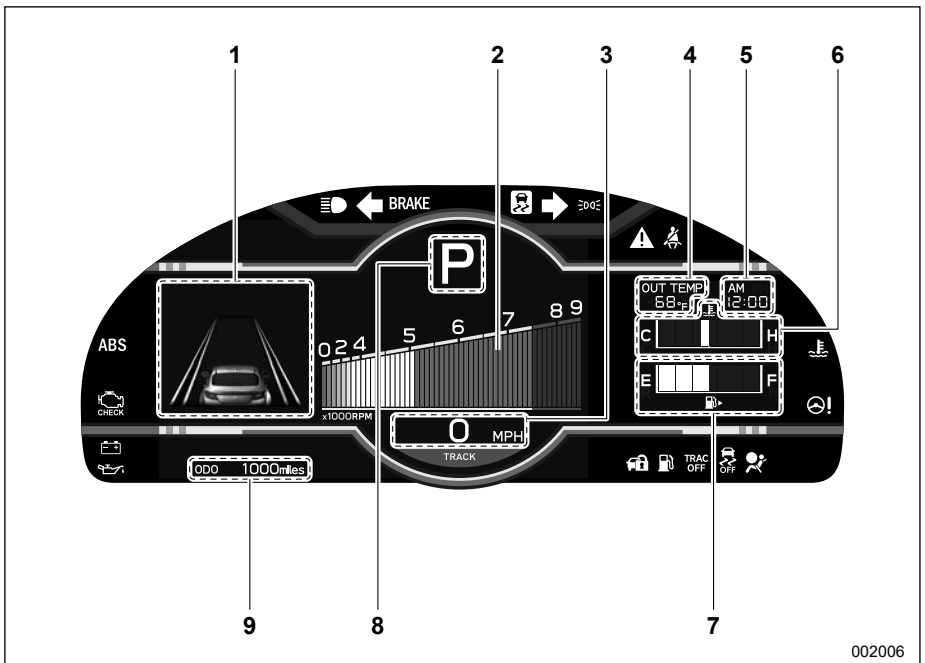

1) Combination meter display (color TFT) (page 155)
2) Tachometer (page 131)
3) Speedometer (page 131)
4) Outside temperature (page 133)
5) Clock (page 176)
6) Engine coolant temperature gauge (page 133)
7) Fuel gauge (page 133)
8) Select lever/gear position indicator (page 153)
9) Trip meter and odometer (page 132)

■ Except U.S. Spec. Models (Normal mode)

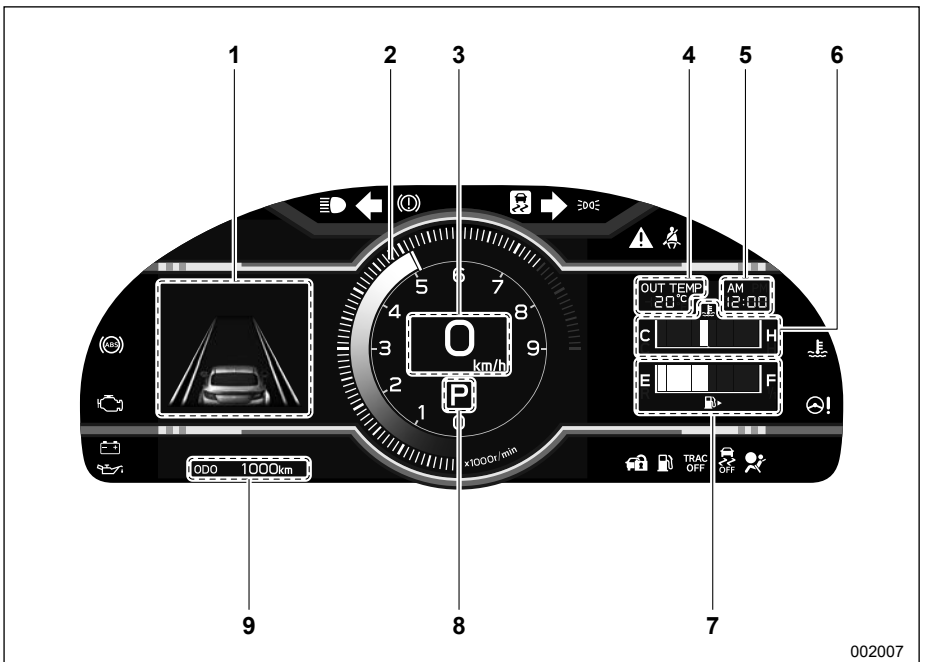

1) Combination meter display (color TFT) (page 155)
2) Tachometer (page 131)
3) Speedometer (page 131)
4) Outside temperature (page 133)
5) Clock (page 176)
6) Engine coolant temperature gauge (page 133)
7) Fuel gauge (page 133)
8) Select lever/gear position indicator (page 153)
9) Trip meter and odometer (page 132)

■ Except U.S. Spec. Models (TRACK mode)

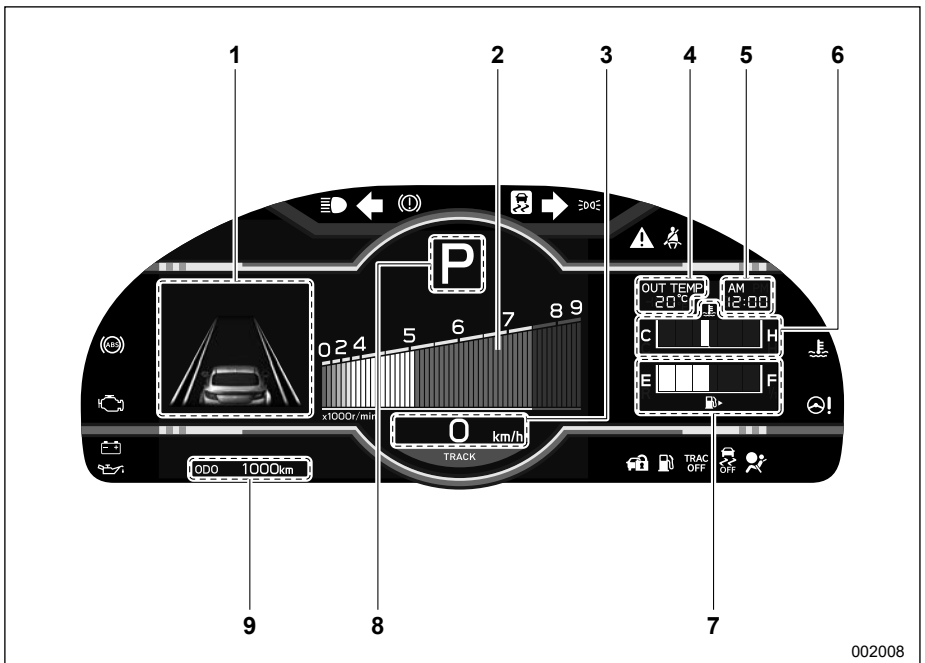

1) Combination meter display (color TFT) (page 155)
2) Tachometer (page 131)
3) Speedometer (page 131)
4) Outside temperature (page 133)
5) Clock (page 176)
6) Engine coolant temperature gauge (page 133)
7) Fuel gauge (page 133)
8) Select lever/gear position indicator (page 153)
9) Trip meter and odometer (page 132)

Table of Warning and Indicator Lights

Mark	Name	Page
	Seatbelt warning light	135
	Front passenger's seatbelt warning light	135
	Rear passenger's seatbelt warning light	135
	SRS airbag system warning light	139
	CHECK ENGINE warning light/Malfunction indicator light	140
	Coolant temperature low indicator light (blue)/Coolant temperature high warning light (red)	140
	Charge warning light	141
	Oil pressure warning light	141
A/T OIL TEMP	AT OIL TEMP warning light (AT models)	142
ABS/	ABS warning light	144
BRAKE/	Brake system warning light	144
	Door open indicator	145

Mark	Name	Page
	Low fuel warning light	145
	Power steering warning light	145
	Vehicle Stability Control (VSC) warning light/ Vehicle Stability Control (VSC) operation indicator light	146
	Vehicle Stability Control (VSC) OFF indicator light	147
TRAC OFF	TRAC OFF indicator light	146
	Access key warning indicator	147
	Security indicator light	152
	Turn signal indicator lights	153
	High beam indicator light	153
	High beam assist indicator light	153
	Automatic headlight beam leveler warning light	153
	LED headlight warning light	153

Mark	Name	Page
SRH OFF	Steering Responsive Headlight OFF indicator light (if equipped)	154
SRH	Steering Responsive Headlight warning light (if equipped)	154
	Hill start assist indicator light	154
	Headlight indicator light	154
	Upshift indicator/ Downshift indicator	153
	Low tire pressure warning light (if equipped)	142
ON 	Front passenger's frontal airbag ON indicator light	139
OFF 	Front passenger's frontal airbag OFF indicator light	139
	BSD/RCTA warning indicator (if equipped)	154
OFF 	BSD/RCTA OFF indicator (if equipped)	154
SNOW	Snow mode indicator light (if equipped)	152
SPORT	Sport mode indicator light	152

Mark	Name	Page
	TRACK mode indicator light	256
	Icy road surface warning indicator	154
	RAB/Sonar Audible Alarm warning indicator (if equipped)	155
	RAB OFF indicator (if equipped)	155
	Sonar Audible Alarm OFF indicator (if equipped)	155
	Master warning light	155

1-1. Front Seats 32
Manual Seat.....35
Head Restraint Adjustment 36
1-2. Seat Heater (If Equipped) 37
Front Seat Heater.....38
1-3. Rear Seats 39
Folding Down the Rear Seatback.....39
1-4. Seatbelts 41
Seatbelt Safety Tips 41
Emergency Locking Retractor (ELR).....42
Automatic Locking Retractor/Emergency Locking Retractor (ALR/ELR) 42
Seatbelt Warning Light and Chime 43
Fastening the Seatbelt 43
Seatbelt Maintenance.....45
1-5. Seatbelt Pretensioners 46
Front seatbelt with Shoulder Belt Pretensioner 47
System Monitors.....47
System Servicing.....47
Precautions against Vehicle Modification.....48
1-6. Child Restraint Systems.....48
Safety precautions 48
Safety Tips for Installing Child Restraint Systems 50
Where to Place a Child Restraint System 50
Choosing a Child Restraint System..... 52
Installing Child Restraint Systems with ALR/ELR Seatbelt 53
Installing a Booster Seat or Booster Cushion 56
Installation of Child Restraint Systems by Use of Lower and Tether Anchorages (LATCH) 57
Top Tether Anchorages 61
1-7. SRS Airbag (Supplemental Restraint System Airbag).....62
General Precautions regarding SRS Airbag System..... 62
General Precautions regarding SRS Airbag System for Accessories and Any Objects 65
General Precautions regarding SRS Airbag System and Children..... 67
Components..... 70
SUBARU Advanced Frontal Airbag System..... 72
SRS Side Airbag and SRS Curtain Airbag..... 82
SRS Airbag System Monitors..... 89
SRS Airbag System Servicing..... 90
Precautions against Vehicle Modification..... 91
How to Contact the Vehicle Manufacturer concerning Modifications for Persons with Disabilities That May Affect the Advanced Airbag System 92

1-1. Front Seats

⚠ WARNING

- **Never adjust the seat while driving, as personal injury or loss of vehicle control may occur.**
- **Before adjusting the seat, ensure nothing is blocking the adjusting mechanism.**
- **After adjusting the seat, move it back and forth to ensure the seat is securely locked. If it is not, it may move suddenly or the seatbelt may not operate properly.**
- **Do not put objects under the front seats. They may interfere with front seat locking mechanism and cause an accident.**

- **Seatbelts provide maximum restraint when the occupant sits back and upright in the seat. To reduce the risk of sliding under the seatbelt in a collision, the front seatbacks should always be used in the upright position while the vehicle is running. If the front seatbacks are not in the upright position and a collision occurs, the risk of sliding under the lap belt and of the lap belt sliding up over the abdomen will increase, and both can result in serious injury or death.**
- **The SRS airbags deploy with considerable speed and force. Occupants who are not sitting back and upright when the SRS airbag deploys could suffer serious injury. Because the SRS airbag needs enough space for deployment, the driver should always sit upright and well back in the seat as far from the steering wheel as practical while still maintaining full vehicle control, and the front passenger should move the seat as far back as possible and sit upright and well back in the seat.**

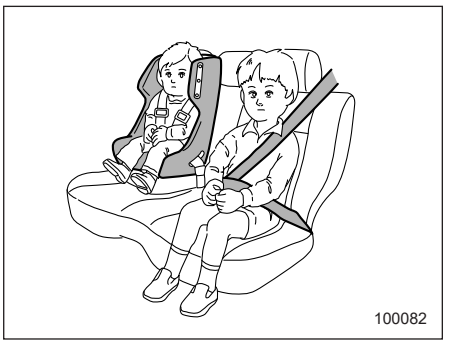
100082

⚠ WARNING

Seat children in the rear seat properly restrained at all times. The SRS airbag deploys with considerable speed and force and can injure or even kill children, especially if they are not restrained or improperly restrained. Because children are lighter and weaker than adults, their risk of being injured from deployment is greater. For that reason, we strongly recommend that ALL children (including those in child restraint systems) sit in the REAR seat properly restrained at all times in a child restraint system or in a seatbelt, whichever is appropriate for the child's age, height and weight. Secure ALL types of child systems in the REAR seats at all times.

NEVER INSTALL A CHILD RESTRAINT SYSTEM IN THE FRONT SEAT. DOING SO RISKS SERIOUS INJURY OR DEATH TO THE CHILD BY PLACING THE CHILD'S HEAD TOO CLOSE TO THE SRS AIRBAG.

According to accident statistics, children are safer when properly restrained in the rear seating positions than in the front seating positions. For instructions and precautions concerning child restraint systems, refer to "Child Restraint Systems" ☞P48.

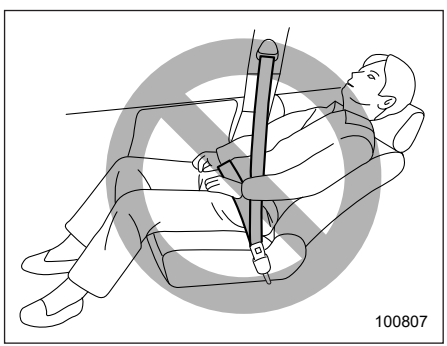

⚠ WARNING

To prevent the passenger from sliding under the seatbelt in the event of a collision, always put the seatback in the upright position while the vehicle is in motion. Also, do not place objects such as cushions between the passenger and the seatback. If you do so, the risk of sliding under the lap belt and of the lap belt sliding up over the abdomen will increase, and both can result in serious internal injury or death.

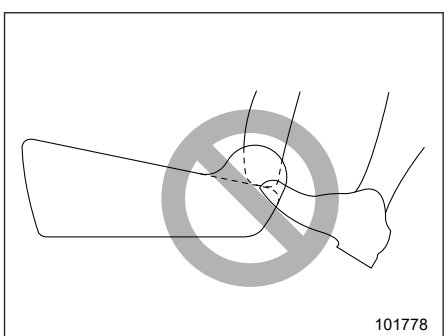

– CONTINUED –

⚠ WARNING

Do not let rear passengers rest their feet between the front seatback and seat cushion. Doing so may interfere with the proper operation of the following systems and could result in serious injury.

- **Occupant detection system**
- **SRS side airbag**
- **Front seat heater (if equipped)**

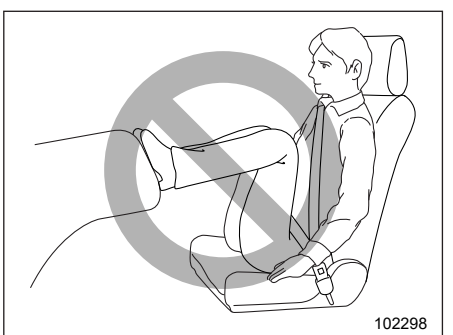

⚠ WARNING

Do not press your feet onto the instrument panel. Doing so may prevent the occupant detection function of the SRS airbag system from functioning correctly, and may result in serious injury or death in the event of an accident.

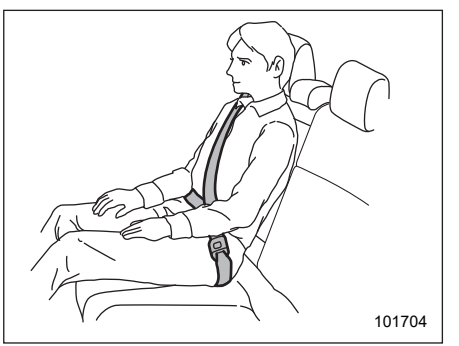

⚠ WARNING

Seatbelts provide maximum restraint when the occupant sits well back and upright in the seat. Do not put cushions or any other materials between occupants and seatbacks or seat cushions. If you do so, the risk of sliding under the lap belt and of the lap belt sliding up over the abdomen will increase, and both can result in serious internal injury or death.

■ Manual Seat

▼ Forward and backward adjustment

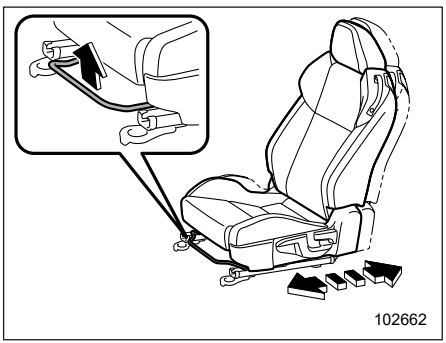

1. Sit in the seat to adjust.
2. Pull the lever upward, slide the seat to the desired position, and then release the lever.
3. Try to move the seat back and forth to make sure that it is securely locked into place.

▼ Reclining the seatback

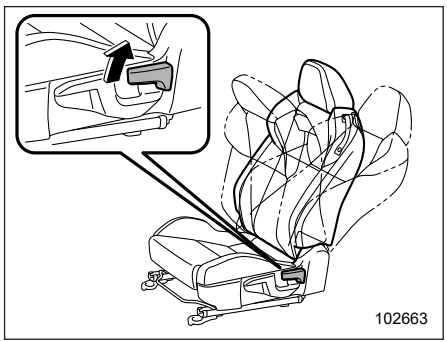

1. Pull up the reclining lever, adjust the seatback to the desired position, and then release the lever.
2. Make sure the seatback is securely locked into place.

The seatback placed in a reclined position can spring back upward with force when pulling up the lever. While operating the lever to return the seatback, hold the seatback lightly so that it may be raised back gradually.

▼ Seat cushion height adjustment (driver's seat)

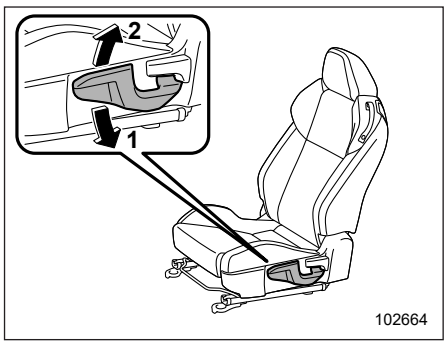

1) Push the lever down to lower the seat.
2) Pull the lever up to raise the seat.

You can adjust the height of the seat by moving the seat cushion adjustment lever up or down.

▼ Getting in and out of the rear seats

To get in and out of the rear seats, use the reclining lever or seatback fold lever.

– CONTINUED –

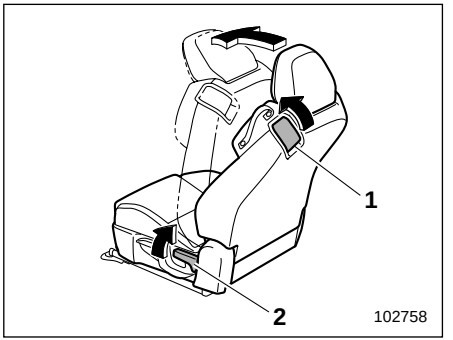

Driver's seat
1) Seatback fold lever
2) Reclining lever

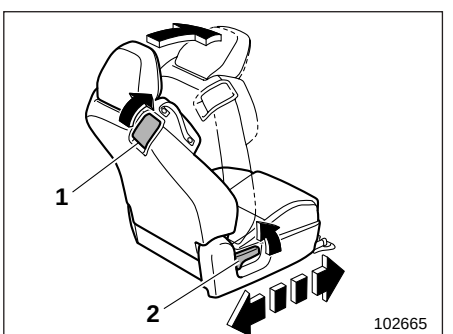

Front passenger's seat
1) Seatback fold lever
2) Reclining lever

▽ **Before getting in or out of the rear seats**

Release the seatbelt from the seatbelt guide.

▽ **Getting in the rear seats**

Lift the reclining lever or seatback fold lever.

The seatback will fold forward.

Front passenger's seat only: The seat can be slid forward and backward.

▽ **Getting out of the rear seats**

Lift the reclining lever or seatback fold lever.

The seatback will fold forward.

Front passenger's seat only: The seat can be slid forward and backward.

▽ **After getting in or out of the rear seats**

Return the seatback to the upright position until the seat locks.

Front passenger seat only: The seat will lock in position at the point where the seatback reaches the upright position.

■ Head Restraint Adjustment

⚠ WARNING

- **Never drive the vehicle with the head restraints removed because they are designed to reduce the risk of serious neck injury in the event that the vehicle is struck from the rear. Also, never install the head restraints backwards. Doing so will prevent the head restraints from functioning as intended. Therefore, when the head restraints are removed, all head restraints must be reinstalled properly to protect vehicle occupants.**
- **All occupants, including the driver, should not operate a vehicle or sit in a vehicle's seat until the head restraints are placed in their proper positions in order to minimize the risk of neck injury in the event of a crash.**

Both the driver's seat and front passenger's seat are equipped with head restraints. Both head restraints are adjustable in the following ways.

▼ **Head restraint height adjustment**

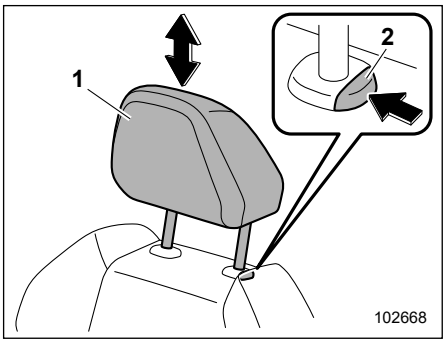

1) Head restraint
2) Release button

To raise:

Pull the head restraint up.

To lower:

Push the head restraint down while pressing the release button on the top of the seatback.

To remove:

While pressing the release button, pull out the head restraint.

To install:

Install the head restraint into the holes that are located on the top of the seatback until the head restraint locks. Press and hold the release button to lower the head restraint.

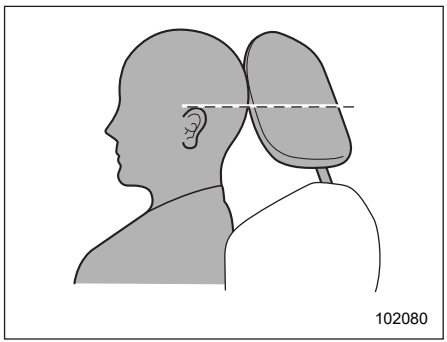

Each head restraint should be adjusted so that the center of the head restraint is closest to the top of the occupant's ears.

NOTE

It is not possible to remove or install the head restraint without reclining the front seatback. Reclining the front seatback and then remove or install the head restraint.

1-2. Seat Heater (If Equipped)

The seat heater operates when the ignition switch is in the "ON" position.

⚠ CAUTION

- **Do not put hard or heavy objects or ones with protrusions on the seat, and do not stab the seat with sharp objects, such as pins or needles.**
- **People with delicate skin may suffer slight burns even at low temperatures if they use the seat heater for a long period of time. When using the heater, always be sure to warn the persons concerned.**
- **Do not put anything on the seat which insulates against heat, such as a blanket, cushion, or similar items. This may cause the seat heater to overheat.**
- **When the seat is warmed enough or before you leave the vehicle, be sure to turn off the seat heater.**

NOTE

• Use of the seat heater for a long period of time while the engine is not running can cause battery discharge.

– CONTINUED –

• When using for a long period of time, we recommend setting the heater to the LOW position. Use the HIGH position for only quick heating at the start of the function usage.

■ Front Seat Heater

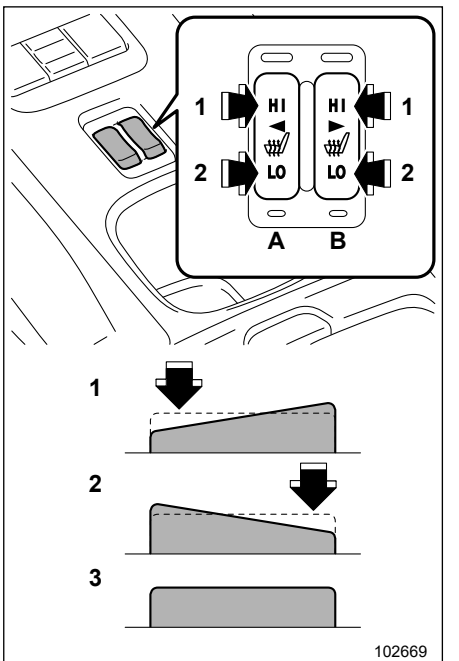

1) **HIGH** – Rapid heating
2) **LOW** – Normal heating
3) Off

A) Left-hand side
B) Right-hand side

To turn on the seat heater, push the "LOW" or "HIGH" position on the switch, as desired, depending on the temperature. Selecting the "HIGH" position will cause the seat to heat up quicker.

To turn off the seat heater, lightly press the opposite side of the current position.

The indicator located on the switch illuminates when the seat heater is in operation. When the vehicle's interior is warmed enough or before you leave the vehicle, be sure to turn the switch off.

1-3. Rear Seats

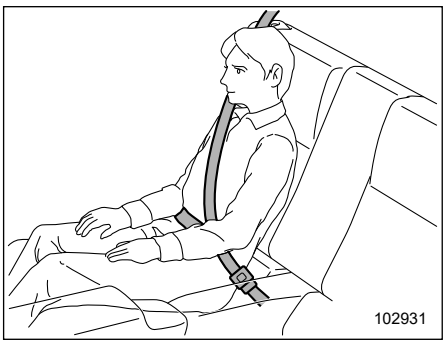

WARNING

Seatbelts provide maximum restraint when the occupant sits back and upright in the seat. Do not place cushions or any other materials between occupants and seatbacks or seat cushions. By doing so, the risk of sliding under the lap belt and of the lap belt sliding up over the abdomen will increase, and both can result in serious internal injury or death.

■ Folding Down the Rear Seatback

WARNING

- **When folding down the seatback, check that there are no passengers or objects on the rear seat. Not doing so creates a risk of injury or property damage.**
- **Never allow passengers to ride on the folded rear seatback or in the trunk. Doing so may result in serious injury or death.**
- **Secure all objects and especially long items properly to prevent them from being thrown around inside the vehicle and causing serious injury during a sudden steering maneuver or acceleration.**
- **When you return the seatback to its original position, shake it slightly to confirm that it is securely in place. If it is not securely fixed in place, it may suddenly fold down in the event of sudden braking, or objects may move out from the trunk, both could cause serious injury or death.**

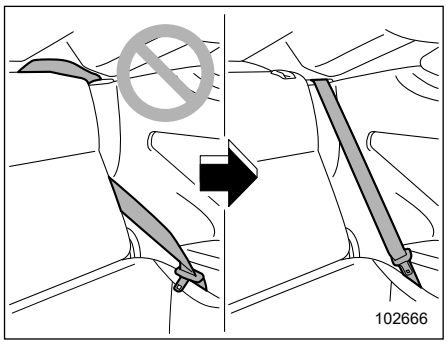

WARNING

When the seatback is returned to its original position, observe the following precautions. Failure to do so may lead to serious injury or an accident because the proper seatbelt operation will be affected.

- **The seatbelt should not be caught in the seatback and it should be fully visible.**

– CONTINUED –

▼ Folding down the rear seatback

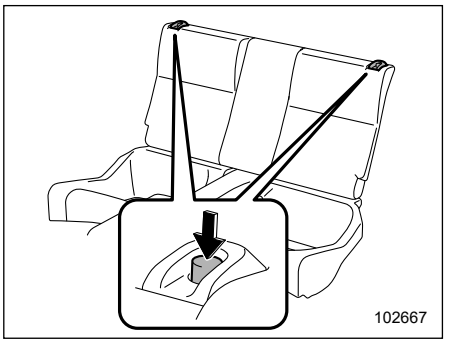

Lock release button

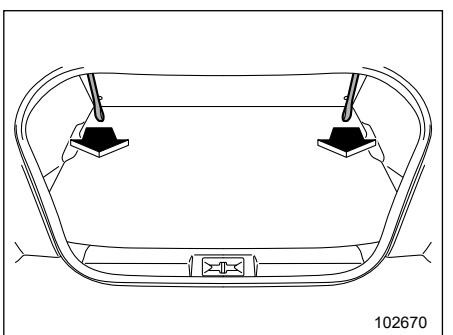

Lock release strap

Unlock the seatback by performing either of the following procedures and then fold the seatback down.

- Push the right and left lock release buttons.
- Pull the right and left lock release straps.

▼ Return the rear seatback

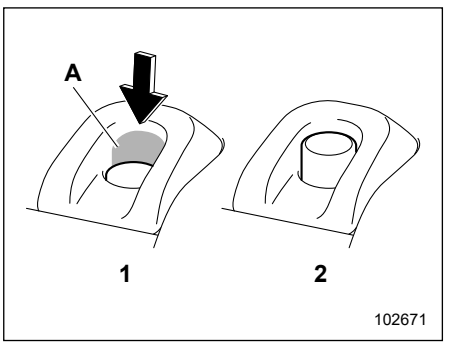

Lock release button

1) Unlocked
2) Locked

A) Unlocking marker in red

To return the seatback to its original position, raise the seatback until it locks into place and ensure that the unlocking marker on the lock release button is no longer visible.

⚠ WARNING

When you return the seatback to its original position, check that the unlocking marker is not visible. Also, push the rear seatback and then check that it is securely locked in position by lightly pushing it back and forth. If the seatback is not securely fixed in place, the seatback may suddenly fold down in the event of sudden braking, or objects may move out from the trunk, which could cause serious injury or death.

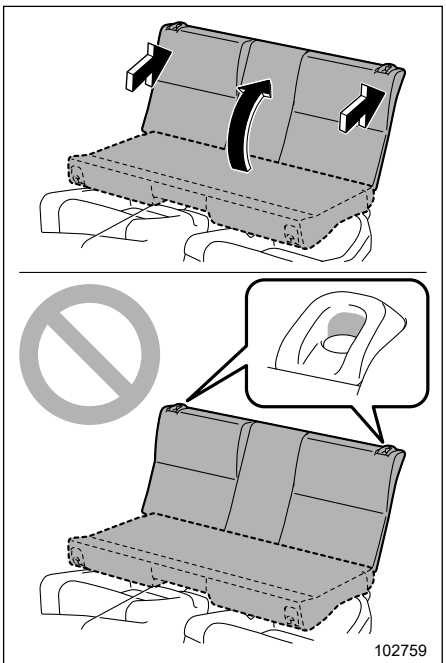

1-4. Seatbelts

■ Seatbelt Safety Tips

⚠ WARNING

- **All persons in the vehicle should fasten their seatbelts BEFORE the vehicle starts to move. Otherwise, the possibility of serious injury becomes greater in the event of a sudden stop or accident.**
- **All belts should fit snugly in order to provide full restraint. Loose fitting belts are not as effective in preventing or reducing injury.**
- **Each seatbelt is designed to support only one person. Never use a single belt for two or more persons – even children. Otherwise, in an accident, serious injury or death could result.**
- **Replace all seatbelt assemblies including retractors and attaching hardware worn by occupants of a vehicle that has been in a serious accident. Also, be sure to replace seatbelt assemblies that show signs of severe fraying or having been cut. The entire assembly should be replaced even if damage is not obvious.**
- **Seat children in the rear seat properly restrained at all times. The SRS airbag deploys with considerable speed and force and can injure or even kill children, especially if they are not restrained or improperly restrained. Because children are lighter and weaker than adults, their risk of being injured from deployment is greater. For that reason, we strongly recommend that ALL children (including those in child restraint systems) sit in the REAR seat properly restrained at all times in a child restraint system or in a seatbelt, whichever is appropriate for the child's height and weight. Secure ALL types of child restraint systems in the REAR seats at all times.**

– CONTINUED –

NEVER INSTALL A CHILD RESTRAINT SYSTEM IN THE FRONT SEAT. DOING SO RISKS SERIOUS INJURY OR DEATH TO THE CHILD BY PLACING THE CHILD'S HEAD TOO CLOSE TO THE SRS AIRBAG.

According to accident statistics, children are safer when properly restrained in the rear seating positions than in the front seating positions. For instructions and precautions concerning child restraint system, refer to "Child Restraint Systems" ☞P48.

This vehicle is equipped with a crash sensing and diagnostic module, which will record the use of the seatbelt by the front passenger when any of the SRS frontal, side and curtain airbags deploys.

▼ Infants or small children

Use a child restraint system that is suitable for this vehicle. Refer to "Child Restraint Systems" ☞P48.

▼ Children

If a child is too big for a child restraint system, the child should sit in the rear seat and be restrained using the seatbelts. According to accident statistics, children are safer when properly restrained in the rear seating positions than in the front seating positions. Never allow a child to stand up or kneel on the seat.

If the shoulder portion of the belt crosses the face or neck, move the child closer to the belt buckle to help provide a good shoulder belt fit. Care must be taken to securely place the lap belt as low as possible on the hips and not on the child's waist. If the shoulder portion of the belt cannot be properly positioned, a child restraint system should be used. Never place the shoulder belt under the child's arm or behind the child's back.

▼ Expectant mothers

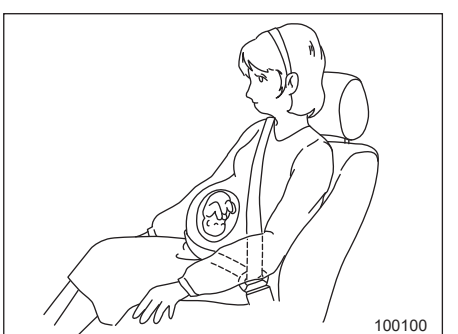

Expectant mothers also need to use the seatbelts. They should consult their doctor for specific recommendations. The lap belt should be worn securely and as low as possible over the hips, not over the waist.

■ Emergency Locking Retractor (ELR)

The driver's seatbelt has an Emergency Locking Retractor (ELR).

The emergency locking retractor allows normal body movement but the retractor locks automatically during a sudden stop, impact or if you pull the belt very quickly out of the retractor.

■ Automatic Locking Retractor/Emergency Locking Retractor (ALR/ELR)

Each passenger's seatbelt has an Automatic Locking Retractor/Emergency Locking Retractor (ALR/ELR). The Automatic Locking Retractor/Emergency Locking Retractor normally functions as an Emergency Locking Retractor (ELR). The ALR/ELR has an additional locking mode, "Automatic Locking Retractor (ALR) mode", intended to secure a child restraint system.

The ALR mode functions as follows.

When the seatbelt is once drawn out completely and is then retracted even

slightly, the retractor locks the seatbelt in that position and the seatbelt cannot be extended. As the belt is rewinding, clicks will be heard which indicate the retractor functions as an ALR. When the seatbelt is retracted fully, the ALR mode is canceled and the ELR mode is restored.

When securing a child restraint system on the rear seats by using a seatbelt, the seatbelt must be changed over to the Automatic Locking Retractor (ALR) mode. For instructions on how to install the child restraint system using a seatbelt, refer to "Installing Child Restraint Systems with ALR/ELR Seatbelt" ☞P53.

When the child restraint system is removed, make sure that the retractor is restored to the Emergency Locking Retractor (ELR) mode by allowing the seatbelt to retract fully.

■ Seatbelt Warning Light and Chime

Refer to "Seatbelt Warning Light and Chime" ☞P135.

■ Fastening the Seatbelt

⚠ WARNING

- **Never use a belt that is twisted or reversed. In an accident, this can increase the risk or severity of injury.**
- **Keep the lap belt as low as possible on your hips. In a collision, this spreads the force of the lap belt over stronger hip bones instead of across the weaker abdomen.**
- **Seatbelts provide maximum restraint when the occupant sits well back and upright in the seat. To reduce the risk of sliding under the seatbelt in a collision, the front seatbacks should be always used in the upright position while the vehicle is running. If the front seatbacks are not used in the upright position in a collision, the risk of sliding under the lap belt and of the lap belt sliding up over the abdomen will increase, and both can result in serious internal injury or death.**
- **Do not put cushions or any other materials between occupants and seatbacks or seat cushions. If you do so, the risk of sliding under the lap belt and of the lap belt sliding up over the abdomen will increase, and both can result in serious internal injury or death.**

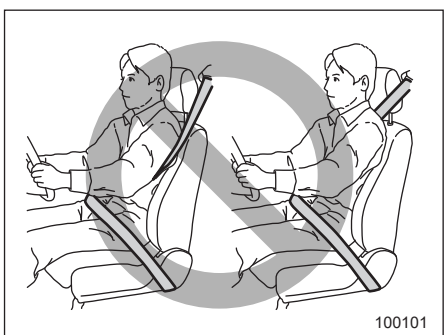

⚠ WARNING

Never place the shoulder belt under the arm or behind the back. If an accident occurs, this can increase the risk or severity of injury.

– CONTINUED –

⚠ CAUTION

Metallic parts of the seatbelt can become very hot in a vehicle that has been closed up in sunny weather; they could burn an occupant. Do not touch such hot parts until they cool.

▼ Front seatbelt guide

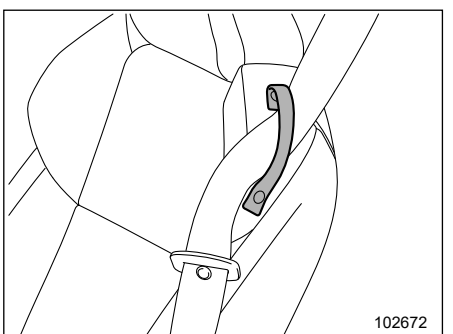

To enable the seatbelt to be easily extended, pass the seatbelt through the guide. When getting in or out of the rear seats, release the seatbelt from the guide.

▼ Front seatbelts

1. Adjust the seat position:

Driver's seat: Adjust the seatback to the upright position. Move the seat as far from the steering wheel as practical while still maintaining full vehicle control.

Front passenger's seat: Adjust the seatback to the upright position. Move the seat as far back as possible.

2. Sit well back in the seat.
3. Pick up the tongue plate and pull the belt out slowly. Do not let it get twisted.
   - If the belt stops before reaching the buckle, return the belt slightly and pull it out more slowly.
   - If the belt still cannot be unlocked, let the belt retract slightly after giving it a strong pull, then pull it out slowly again.

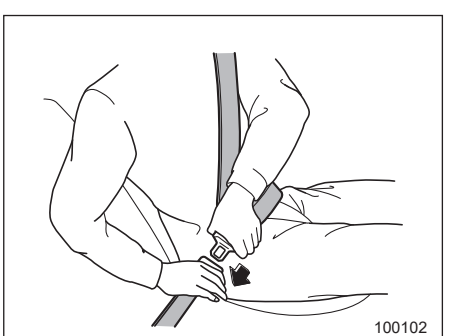

4. Insert the tongue plate into the buckle until you hear a click.

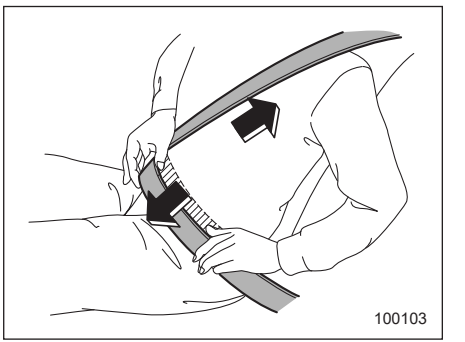

5. To tighten the lap part, pull up on the shoulder belt.
6. Place the lap belt as low as possible on the hips, not on the waist.

▽ **Unfastening the seatbelt**

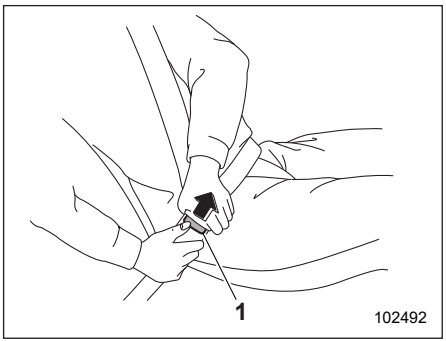

1) Button

1. Push the button on the buckle.
2. Retract the seatbelt slowly to prevent it from getting tangled or twisted.

Before closing the door, make sure that the belts are retracted properly to avoid catching the belt webbing in the door.

▼ **Rear seatbelts**

1. Sit well back in the seat.
2. Pick up the tongue plate and pull the belt out slowly. Do not let it get twisted.
   - If the belt stops before reaching the buckle, return the belt slightly and pull it out more slowly.
   - If the belt still cannot be unlocked, let the belt retract slightly after giving a strong pull on it, then pull it out slowly again.

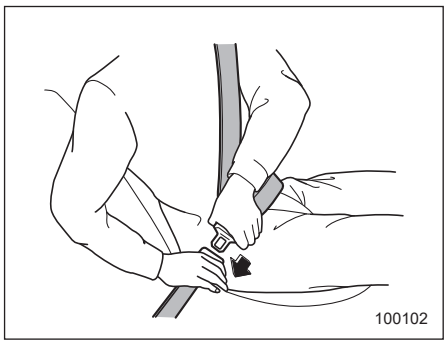

3. Insert the tongue plate into the buckle until you hear a click.

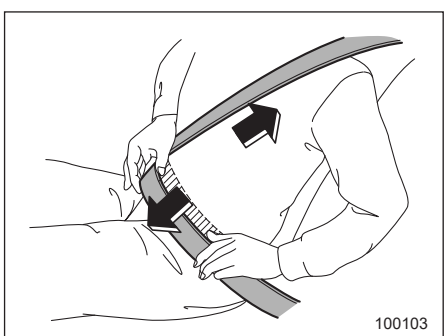

4. To tighten the lap part, pull up on the shoulder belt.
5. Place the lap belt as low as possible on the hips, not on the waist.

▽ **Unfastening the seatbelt**

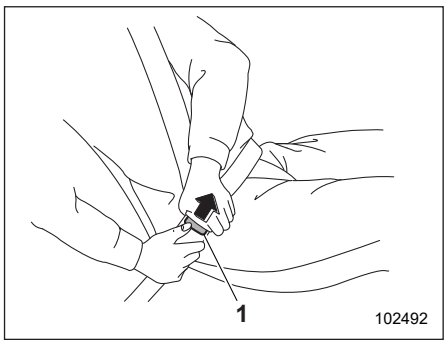

1) Button

1. Push the button on the buckle.
2. Retract the seatbelt slowly to prevent it from getting tangled or twisted.

Before closing the door, make sure that the belts are retracted properly to avoid catching the belt webbing in the door.

■ Seatbelt Maintenance

To clean the seatbelts, use a mild soap and lukewarm water. Never bleach or dye the belts because this could seriously affect their strength.

– CONTINUED –

Inspect the seatbelts and attachments including the webbing and all hardware periodically for cracks, cuts, gashes, tears, damage, loose bolts or worn areas. Replace the seatbelts even if only minor damage is found.

⚠ CAUTION

- **Keep the belts free of polishes, oils, chemicals and particularly battery acid.**
- **Never attempt to make modifications or changes that will prevent the seatbelt from operating properly.**

1-5. Seatbelt Pretensioners

The following seatbelts have a seatbelt pretensioner.

- Driver's seatbelt
- Front passenger's seatbelt

The seatbelt pretensioners are designed to be activated in the event of an accident involving a moderate to severe frontal and side collision and rollover accident.

⚠ WARNING

- **To obtain maximum protection, the occupants should sit in an upright position with their seatbelts properly fastened. Refer to "Seatbelts" ☞P41.**
- **Do not modify, remove or strike the seatbelt retractor assemblies equipped with seatbelt pretensioners or surrounding area. This could result in accidental activation of the seatbelt pretensioners or could make the system inoperative, possibly resulting in serious injury. Seatbelt pretensioners have no user-serviceable parts. For required servicing of seatbelt retractors equipped with seatbelt pretensioners, consult your SUBARU dealer.**
- **When discarding seatbelt retractor assemblies equipped with seatbelt pretensioners or scrapping the entire vehicle due to collision damage or for other reasons, consult your SUBARU dealer.**

NOTE

- **Seatbelt pretensioners are not designed to activate in minor impacts or in rear impacts.**
- **Pretensioners are designed to function on a one-time-only basis. In the event that a pretensioner is activated, both the driver's and front passenger's seatbelt retractor assemblies should be replaced only by an authorized SUBARU dealer. When replacing seatbelt retractor assemblies, use only genuine SUBARU parts.**
- **If a seatbelt that has a seatbelt pretensioner does not retract or cannot be pulled out due to a malfunction or activation of the pretensioner, contact your SUBARU dealer as soon as possible.**
- **If the seatbelt retractor assembly or surrounding area has been damaged, contact your SUBARU dealer as soon as possible.**

- **When you sell your vehicle, we urge you to inform the buyer that the vehicle is equipped with seatbelt pretensioners. Also, notify the buyer of the contents in this section.**

■ Front seatbelt with Shoulder Belt Pretensioner

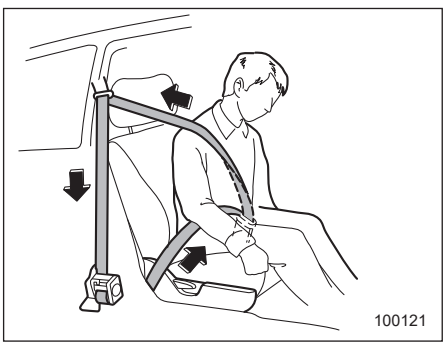

The pretensioner sensor also serves as follows.

- Front impact sensors
- Side impact sensors
- Rollover sensor

If the sensor detects a certain predetermined amount of force during frontal or side collisions or rollover accidents, any seatbelt that has a seatbelt pretensioner is quickly drawn back in by the retractor to take up the slack so that the belt more effectively restrains the seat occupant.

The front seatbelt pretensioner includes a tension reducing device which limits the peak forces exerted by the seatbelt on the occupant in the event of a collision. The front passenger's side adaptive force limiter will select a reducing load to suit the body size of the occupant as detected by the occupant detection sensor.

When a seatbelt pretensioner is activated, an operating noise will be heard and a small amount of smoke will be released. These occurrences are normal and not harmful. This smoke does not indicate a fire in the vehicle.

Once the seatbelt pretensioner has been activated, the seatbelt retractor remains locked. Consequently, the seatbelt cannot be pulled out and retracted and therefore must be replaced.

■ System Monitors

A diagnostic system continually monitors the readiness of the seatbelt pretensioner with the ignition switch in the “ON” position. The seatbelt pretensioners share the control module with the SRS airbag system. Therefore, if any malfunction occurs in a seatbelt pretensioner, the SRS airbag system warning light will illuminate. For details, refer to "SRS Airbag System Monitors" ☞P89.

■ System Servicing

⚠ WARNING

- **When discarding a seatbelt retractor assembly or scrapping the entire vehicle damaged by a collision, consult your SUBARU dealer.**
- **Tampering with or disconnecting the system’s wiring could result in accidental activation of the seatbelt pretensioner and/or SRS airbag or could make the system inoperative, which may result in serious injury. Do not use electrical test equipment on any circuit related to the seatbelt pretensioner and SRS airbag systems. For required servicing of the seatbelt pretensioner, consult your nearest SUBARU dealer.**

⚠ CAUTION

For the locations of the sensors and control modules, refer to "Components" ☞P70.

– CONTINUED –

If you need service or repair in those areas or near the front seatbelt retractors, have the work performed by your authorized SUBARU dealer.

NOTE

If the front or side part of the vehicle is damaged in an accident to the extent that the seatbelt pretensioner does not operate, contact your SUBARU dealer as soon as possible.

■ Precautions against Vehicle Modification

Always consult your SUBARU dealer if you want to install any accessory parts to your vehicle.

⚠ CAUTION

Do not perform any of the following modifications. Such modifications can interfere with proper operation of the seatbelt pretensioners.

- **Attachment of any equipment (bush bar, winches, snow plow, skid plate, etc.) other than genuine SUBARU accessory parts to the front end.**
- **Modification of the suspension system or front end structure.**
- **Installation of a tire of different size and construction from the tires specified on the vehicle placard attached to the driver's center pillar or specified for individual vehicle models in this Owner's Manual.**

1-6. Child Restraint Systems

■ Safety precautions

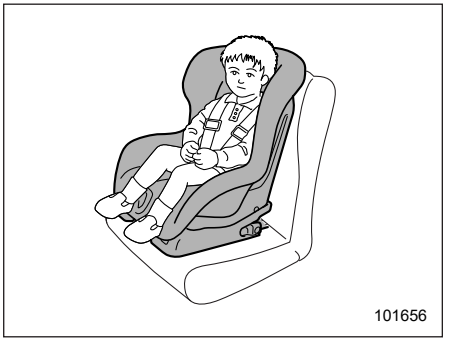

Infants and small children should always be placed in an infant or child restraint system in the rear seat while riding in the vehicle.

You should use an infant or child restraint system that meets Federal Motor Vehicle Safety Standards or Canada Motor Vehicle Safety Standards, is compatible with your vehicle and is appropriate for the child's age and size.

All child restraint systems are designed to be secured in vehicle seats by lap belts or the lap belt portion of a lap/shoulder belt (except those described in "Installation of Child Restraint Systems by Use of Lower and Tether Anchorages (LATCH)" ☞P57).

Children could be endangered in an accident if their child restraint systems are not properly secured in the vehicle. When installing the child restraint system, carefully follow the manufacturer's instructions.

According to accident statistics, children are safer when properly restrained in the rear seating positions than in the front seating positions.

All U.S. states and Canadian provinces require that infants and small children be restrained in an approved child restraint system at all times while the vehicle is moving.

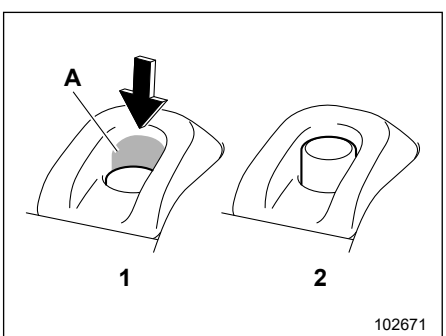

Lock release button

1) Unlocked
2) Locked

A) Unlocking marker in red

⚠ WARNING

- **Before installing a child restraint system, be sure to confirm that the seatback is securely locked into place. Otherwise, in an accident, serious injury or death could result.**
- **Do not leave children in the car unattended. High interior temperatures may cause heat stroke and dehydration that result in serious injury or death.**

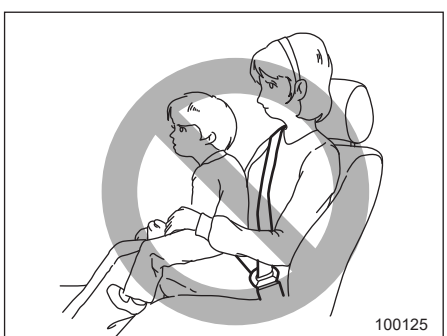

⚠ WARNING

Never let a passenger hold a child on his or her lap or in his or her arms while the vehicle is moving. The passenger cannot protect the child (or infant) from injury in a collision, because the child will be caught between the passenger and objects inside the vehicle. Additionally, holding a child in your lap or arms in the front seat exposes that child to another serious danger. Since the SRS airbag deploys with considerable speed and force, the child could be injured or even killed.

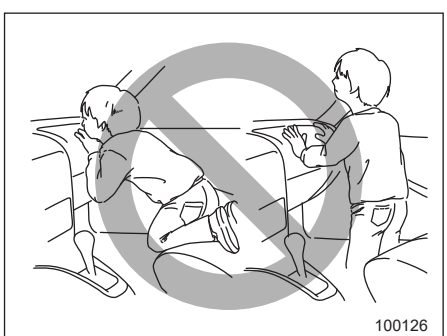

– CONTINUED –

⚠ WARNING

Children should be properly restrained at all times. Never allow a child to stand up, or to kneel on any seat. Unrestrained children will be thrown forward during sudden stop or in an accident and can be injured seriously.

Additionally, children standing up or kneeling on or in front of the front seat are exposed another serious danger. Since the SRS airbag deploys with considerable speed and force, the child could be injured or even killed.

■ Safety Tips for Installing Child Restraint Systems

⚠ WARNING

- **Child restraint systems and seatbelts can become hot in a vehicle that has been closed up in sunny weather; they could burn a small child. Check the child restraint system before you place a child in it.**
- **Do not use a seatbelt extender. If a seatbelt extender is used when installing a child restraint system, the seatbelt will not securely hold the child restraint system. Use of a seatbelt extender could cause death or serious injury to children or other passengers in sudden braking, swerving, or accidents.**
- **Attach the child restraint system to the anchors properly. When using the LATCH anchors, be sure that there are no foreign objects around the anchors. Make sure the child restraint system is securely attached. Otherwise it may cause death or serious injury to children or other passengers in sudden braking, swerving, or accidents.**
- **Do not leave an unsecured child restraint system in your vehicle. Unsecured child restraint systems can be thrown around inside of the vehicle in a sudden stop, turn or accident; they can strike and injure vehicle occupants as well as result in serious injuries or death to the child.**

⚠ CAUTION

When you install a child restraint system, follow the manufacturer's instructions supplied with it. After installing the child restraint system, check to ensure that it is held securely in position. If it is not held tight and secure, the danger of your child suffering personal injury in the event of an accident may be increased.

■ Where to Place a Child Restraint System

The following descriptions are SUBARU's recommendations on where to place a child restraint system in your vehicle.

⚠ WARNING

- **Several types of child restraint systems may conceal the buckle of the neighboring seat. If the occupant of the neighboring seat cannot correctly fasten the seatbelt, that person must move to a different seat. If the seatbelt cannot be correctly fastened, there is the risk of serious injury or death in the event of sudden braking or a collision.**

- **If the child restraint system cannot be correctly installed because it contacts the driver's seat, move the child restraint system to a different seat. If it cannot be installed in a different seat (other than the driver's seat), adjust the front seat so that contact does not occur.**

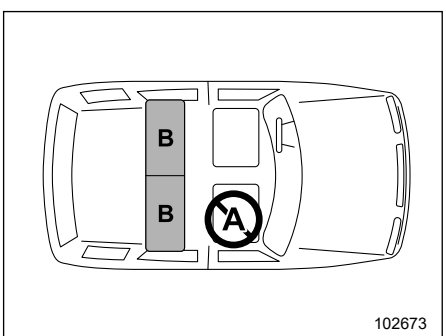

A: Front passenger's seat

You should not install a child restraint system (including a booster seat) due to the hazard to children posed by the passenger's airbag.

B: Rear seat

Recommended positions for all types of child restraint systems.

In these positions, the following equipment is provided for installing a child restraint system.

- Automatic Locking Retractor/Emergency Locking Retractor (ALR/ELR) seatbelts
- Lower anchorages (bars)
- Upper anchorages (tether anchorages)

Some types of child restraint systems might not be able to be secured firmly due to projection of the seat cushion.

In this seating position, you should use only a child restraint system that has a bottom base that fits snugly against the contours of the seat cushion and can be securely retained using the seatbelt.

⚠ WARNING

- **Even with advanced airbags, children can be seriously injured by the airbag. Seat children in the rear seat properly restrained at all times. The SRS airbag deploys with considerable speed and force and can injure or even kill children, especially if they are not restrained or improperly restrained. Because children are lighter and weaker than adults, their risk of being injured from deployment is greater.**

For that reason, be sure to secure ALL types of child restraint systems in the REAR seats at all times. You should choose a restraint system which is appropriate for the child's age, height and weight. According to accident statistics, children are safer when properly restrained in the rear seating positions than in the front seating positions.

- **Do not connect two or more lower hooks onto the same anchorage (bar).**

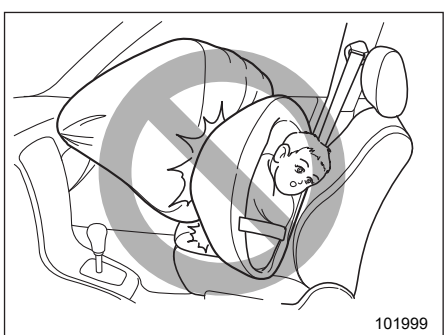

– CONTINUED –

⚠ WARNING

- **SINCE YOUR VEHICLE IS EQUIPPED WITH A PASSENGER'S SRS AIRBAG, NEVER INSTALL A CHILD RESTRAINT SYSTEM IN THE FRONT PASSENGER'S SEAT. DOING SO RISKS SERIOUS INJURY OR DEATH TO THE CHILD BY PLACING THE CHILD'S HEAD TOO CLOSE TO THE SRS AIRBAG.**
- **Do not allow children to lean their heads or any other parts of their bodies against the door or the area of the seat, front and rear pillars or roof side rails. The SRS side airbags and SRS curtain airbags deploy even if children are seated in the child restraint system, and the impact could cause death or serious injury to the child.**
- **To secure the child restraint system, be sure to comply with all installation instructions provided by the child restraint system manufacturer. Not doing so could result in death or serious injury to children in a sudden stop or accident.**

■ Choosing a Child Restraint System

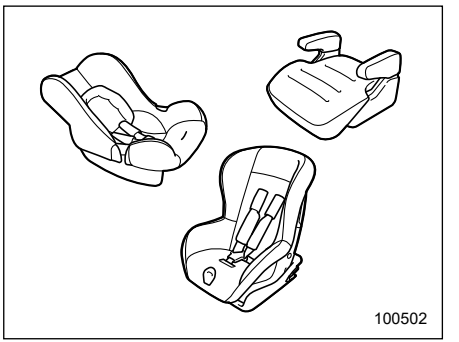

Choose a child restraint system that is appropriate for the child's age and size (weight and height) in order to provide the child with proper protection. The child restraint system should meet all applicable requirements of Federal Motor Vehicle Safety Standards for the United States or of Canada Motor Vehicle Safety Standards for Canada. It can be identified by looking for the label on the child restraint system or the manufacturer's statement of compliance in the document attached to the system. Also it is important for you to make sure that the child restraint system is compatible with the vehicle in which it will be used.

NOTE

Some sizes of child restraint systems may not fit the vehicle seat. Before purchasing a child restraint system, check whether it fits on the vehicle seat.

■ Installing Child Restraint Systems with ALR/ELR Seatbelt

⚠ CAUTION

When you install a child restraint system, follow the manufacturer's instructions supplied with it. After installing the child restraint system, check to ensure that it is held securely in position. If it is not held tight and secure, the danger of your child suffering personal injury in the event of an accident may be increased.

▼ Installing a rearward facing child restraint system

⚠ WARNING

- **NEVER INSTALL A CHILD RESTRAINT SYSTEM IN THE FRONT PASSENGER'S SEAT. DOING SO RISKS SERIOUS INJURY OR DEATH TO THE CHILD BY PLACING THE CHILD'S HEAD TOO CLOSE TO THE SRS AIRBAG.**
- **Before installing a child restraint system, be sure to confirm that the seatback is securely locked into place. Otherwise, in an accident, serious injury or death could result.**

1. Place the child restraint system in the rear seating position.

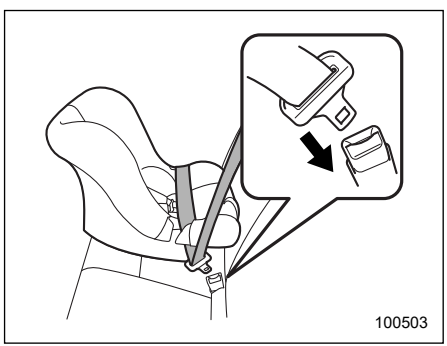

2. Run the lap and shoulder belt through or around the child restraint system following the instructions provided by its manufacturer.
3. Insert the tongue plate into the buckle until you hear a click.

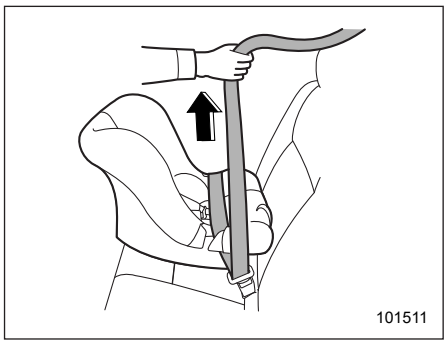

4. Take up the slack in the lap belt.
5. If using the seatbelt in the ALR mode is recommended by the manufacturer's instructions supplied with the child restraint system, perform the following procedure.

(1) Pull out the seatbelt fully from the retractor to change the retractor over from the Emergency Locking Retractor (ELR) to the Automatic Locking Retractor (ALR) mode.
(2) Allow the belt to rewind into the retractor. As the belt is rewinding, clicks will be heard which indicate the retractor functions as ALR.

– CONTINUED –

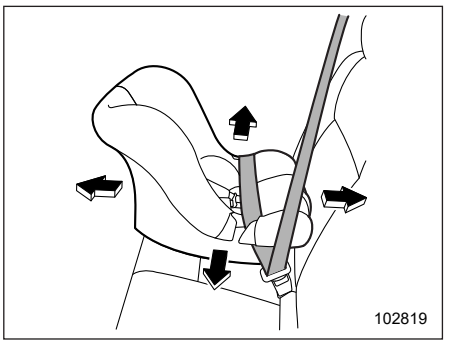

6. Before having a child sit in the child restraint system, try to move it back and forth and right and left to check if it is firmly secured. Sometimes a child restraint system can be more firmly secured by pushing it down into the seat cushion and then tightening the seatbelt. It should not be possible to move the child restraint system more than 1 in (2.5 cm) in any direction along the seatbelt path.

7. If the seatbelt has been set to the ALR mode, pull at the shoulder portion of the belt to confirm that it cannot be pulled out (ALR properly functioning).

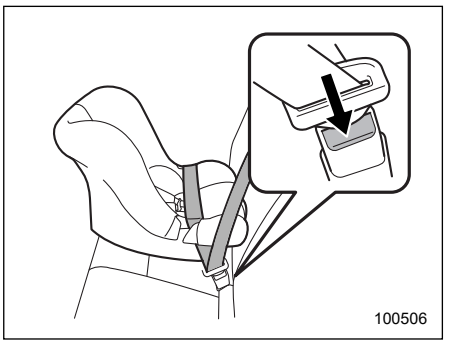

8. To remove the child restraint system, press the release button on the seatbelt buckle and allow the belt to retract completely. The belt will return to the ELR mode.

NOTE

When the child restraint system is no longer in use, remove it and restore the ELR function of the retractor. That function is restored by allowing the seatbelt to retract fully.

▼ Installing a forward facing child restraint system

⚠ WARNING

- **NEVER INSTALL A CHILD RESTRAINT SYSTEM IN THE FRONT PASSENGER'S SEAT. DOING SO RISKS SERIOUS INJURY OR DEATH TO THE CHILD BY PLACING THE CHILD'S HEAD TOO CLOSE TO THE SRS AIRBAG.**
- **Before installing a child restraint system, be sure to confirm that the seatback is securely locked into place. Otherwise, in an accident, serious injury or death could result.**

1. Place the child restraint system in the rear seating position.

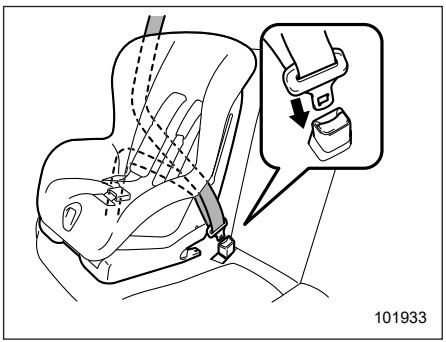

2. Run the lap and shoulder belt through the child restraint system following the instructions provided by its manufacturer.

3. Insert the tongue plate into the buckle until you hear a click.

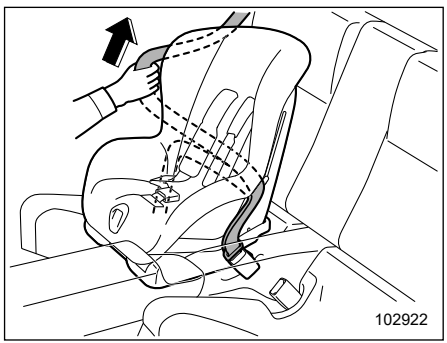

4. Take up the slack in the lap belt.

5. Pull out the seatbelt fully from the retractor to change the retractor over from the Emergency Locking Retractor (ELR) to the Automatic Locking Retractor (ALR) function. Then, allow the belt to rewind into the retractor. As the belt is rewinding, clicks will be heard which indicate the retractor functions as ALR.

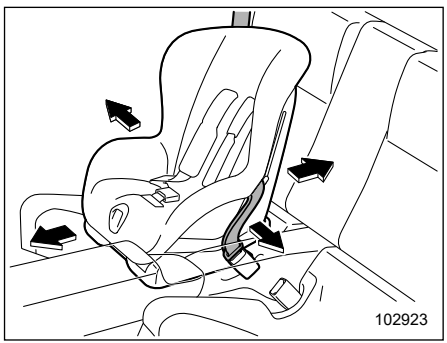

6. Before having a child sit in the child restraint system, try to move it back and forth and right and left to check if it is firmly secured. Sometimes a child restraint system can be more firmly secured by pushing it down into the seat cushion and then tightening the seatbelt. It should not be possible to move the child restraint system more than 1 in (2.5 cm) in any direction along the seatbelt path.

7. Pull at the shoulder portion of the belt to confirm that it cannot be pulled out (ALR properly functioning).

– CONTINUED –

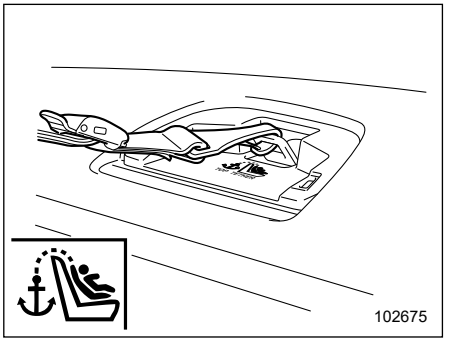

8. Latch the top tether hook onto the tether anchorage that is located behind the rear seat and tighten the top tether firmly. For additional instructions, refer to "Top Tether Anchorages" ☞P61.

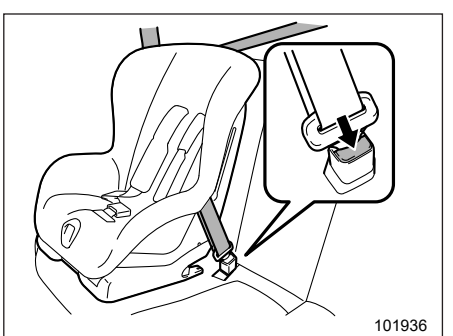

9. To remove the child restraint system, press the release button on the seatbelt buckle and allow the belt to retract completely. The belt will return to the ELR mode.

NOTE

When the child restraint system is no longer in use, remove it and restore the ELR function of the retractor. That function is restored by allowing the seatbelt to retract fully.

■ Installing a Booster Seat or Booster Cushion



1. Place the booster seat/cushion in the rear seating position and sit the child on it. The child should sit well back on the booster seat/cushion.

2. Run the lap and shoulder belt following the instructions provided by its manufacturer. For booster seat/cushion with a belt guide, use the seatbelt through the belt guide.

3. Insert the tongue plate into the buckle until you hear a click. Take care not to twist the seatbelt.

Make sure the shoulder belt is positioned across the center of child's shoulder and that the lap belt is positioned as low as possible on the child's hips.

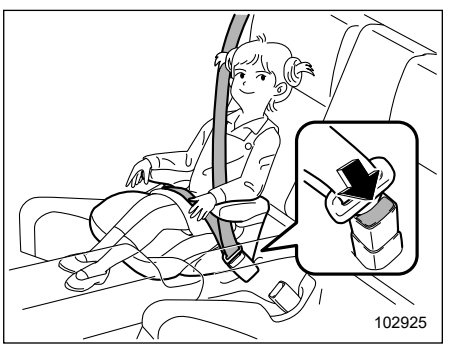

4. To unfasten the seatbelt, press the release button on the seatbelt buckle and allow the belt to retract.

⚠ WARNING

- **Never use a belt that is twisted or reversed. In an accident, this can increase the risk or severity of injury to the child.**
- **Never place the shoulder belt under the child's arm or behind the child's back. If an accident occurs, this can increase the risk or severity of injury to the child.**
- **The seatbelt should fit snugly in order to provide full restraint. Loose fitting belts are not as effective in preventing or reducing injury.**
- **Place the lap belt as low as possible on the child's hips. A high-positioned lap belt will increase the risk of sliding under the lap belt and of the lap belt sliding up over the abdomen, and both can result in serious injury or death.**
- **Make sure the shoulder belt is positioned across the center of child's shoulder. Placing the shoulder belt over the neck may result in neck injury during sudden braking or in a collision.**

■ Installation of Child Restraint Systems by Use of Lower and Tether Anchorages (LATCH)

▼ Lower and tether anchorages

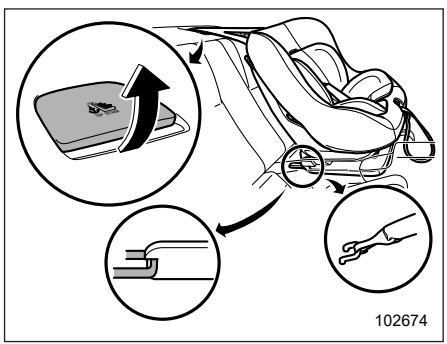

⚠ WARNING

- **Attach the child restraint system to the anchors properly. When using the LATCH anchors, be sure that there are no foreign objects around the anchors. Make sure the child restraint system is securely attached. Otherwise it may cause death or serious injury to children or other passengers in sudden braking, swerving, or accidents.**
- **When installing a child restraint system using LATCH anchors with the rear seatbelt fastened, ensure that the rear seatbelt does not become caught in the child restraint system or the lower LATCH anchorages.**

NOTE

The seatbelt warning system of the rear seats detects if any of the seats are occupied by a passenger. Installing a child restraint system in the rear seating area, using the LATCH anchors, may result in the activation of the passenger seatbelt warning light and chime. Fastening the rear seatbelt prior to installing the child restraint system will avoid activating the passenger seatbelt warning light and chime. For details, refer to "Rear passenger's seats" ☞P137

Some types of child restraint systems can be installed on the rear seat of your vehicle without use of the seatbelts. Such child restraint systems are secured to the dedicated anchorages provided on the vehicle body.

The lower and tether anchorages are sometimes referred to as the LATCH system (**L**ower **A**nchors and **T**ethers for **CH**ildren).

– CONTINUED –



Your vehicle is equipped with four lower anchorages (bars) and two upper anchorages (tether anchorages) for accommodating such child restraint systems.

▽ Lower anchorages

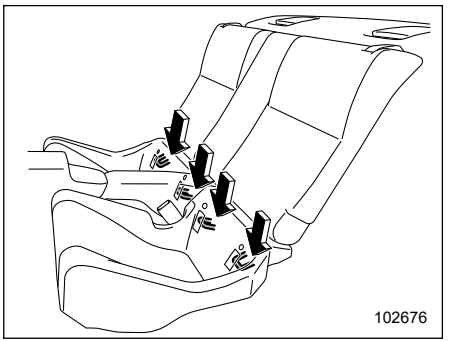

The lower anchorages (bars) are used for installing a child restraint system. For each seating position, two lower anchorages are provided. Each lower anchorage is located where the seat cushion meets the seatback.

▽ Tether anchorages

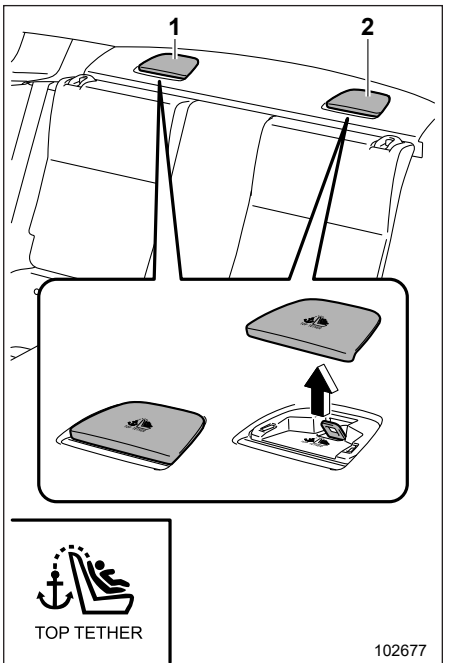

1) For right seat
2) For left seat

The tether anchorages (upper anchorages) are provided at the locations shown

in the above illustration. For details, refer to "Top Tether Anchorages" ☞P61.

▽ **To install a child restraint system using lower and tether anchorages**

⚠ WARNING

Before installing a child restraint system, be sure to confirm that the seatback is securely locked into place. Otherwise, in an accident, serious injury or death could result.

1. Move the seatback back and forth to confirm that it is securely locked into place.

– Check that the red colored unlocking marker on the lock release button is not visible. For details, refer to "Folding Down the Rear Seatback" ☞P39.

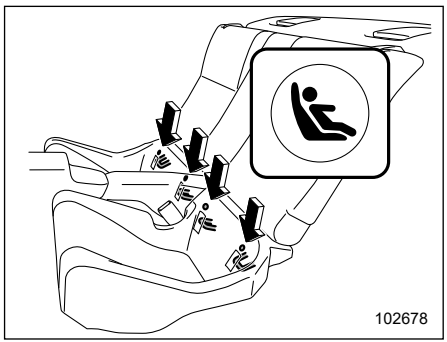

2. You will find "⚓" marks at the bottoms of the rear seatback. These marks indicate the positions of the lower anchorages (bars).

Each lower anchorage is located behind the cover of seatback bottom.

⚠ CAUTION

When you install a child restraint system, follow the manufacturer's instructions supplied with it. After installing the child restraint system, check to ensure that it is held securely in position. If it is not held tight and secure, the danger of your child suffering personal injury in the event of an accident may be increased.

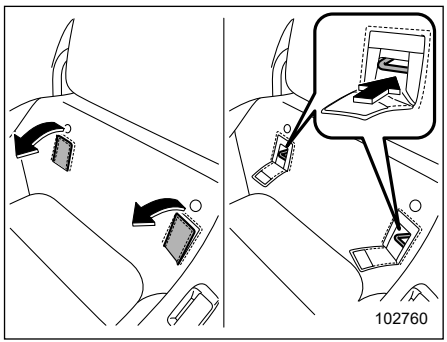

Peel off the anchorage cover completely from the selected side of the rear seatback to expose the anchorages (bars) to be used for installation of the child restraint system.

If it is hard to install the child restraint system because the anchorage cover returns to the original position, press the anchorage cover to the seat cushion until it is flat.

– CONTINUED –

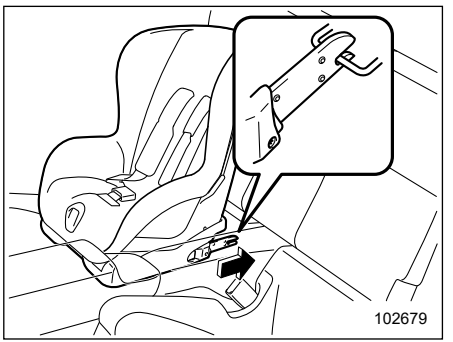

3. While following the instructions supplied by the child restraint system manufacturer, connect the lower hooks onto the lower anchorages located at "" marks on the bottom of the rear seatback. When the hooks are connected, make sure the adjacent seatbelts are not caught.

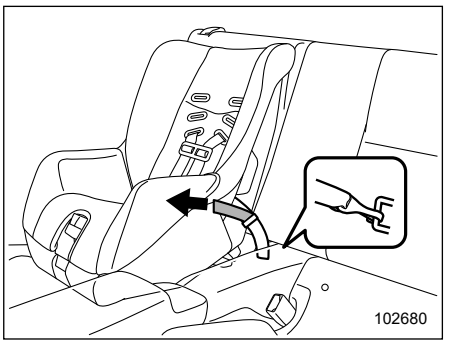

4. If your child restraint system is a flexible attachment type (which uses tether belts), push the child restraint system into the seat cushion and pull both left and right lower tether belts up to secure the child restraint system by taking up the slack in the belt.

5. Latch the top tether hook onto the tether anchorage that is located on the rear shelf and tighten the top tether firmly. For additional instructions, refer to "Top Tether Anchorages" ☞P61.

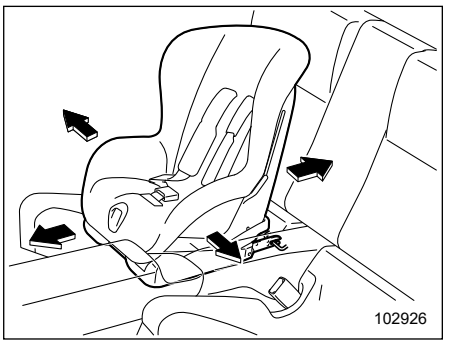

6. Before having a child sit in the child restraint system, try to move it back and forth and right and left to check if it is firmly secured. Sometimes a child restraint system can be more firmly secured by pushing it down into the seat cushion. It should not be possible to move the child restraint system more than 1 in (2.5 cm).

7. To remove the child restraint system, follow the reverse procedures of installation.

SUBARU recommends that you check with a certified Child Passenger Safety Technician to ensure the proper installation of your child restraint system. For more information, and to locate the closest inspection location in the U.S., refer to the National Highway Traffic Safety Administration (NHTSA) website. In Canada, check with Transport Canada.

■ Top Tether Anchorages

Your vehicle is equipped with two top tether anchorages so that a child restraint system having a top tether can be installed in the rear seat. When installing a child restraint system using top tether, proceed as follows, while observing the instructions by the child restraint system manufacturer.

Since a top tether can provide additional stability by offering another connection between a child restraint system and the vehicle, we recommend that you use a top tether whenever one is required or available.

▼ Tether anchorage location

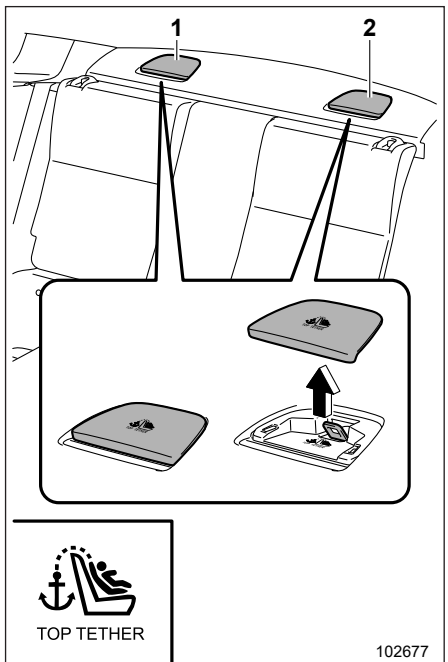

1) For right seat
2) For left seat

Two tether anchorages are installed on the rear shelf. Remove the cover flap to use each anchorage.

▼ To hook the top tether

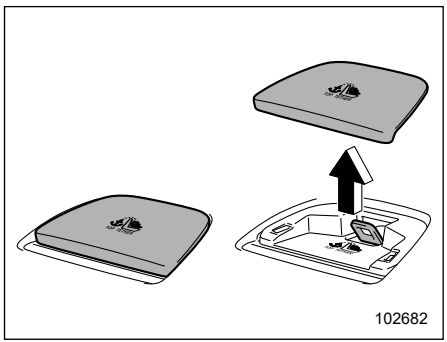

1. Remove the cover flaps to use the anchorages.

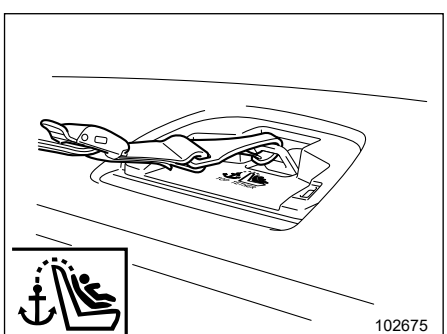

2. Fasten the top tether hook of the child restraint system to the appropriate upper anchorage.

– CONTINUED –

3. Tighten the top tether securely. SUBARU recommends that you check with a certified Child Passenger Safety Technician to ensure the proper installation of your child restraint system. For more information, and to locate the closest inspection location in the U.S., refer to the National Highway Traffic Safety Administration (NHTSA) website. In Canada, check with Transport Canada.

After removing a child restraint system, make sure to install the top tether cover to its original position.

1-7. SRS Airbag (Supplemental Restraint System Airbag)

Supplemental Restraint System (SRS) name is used because the airbag system supplements the vehicle's seatbelts.

This vehicle is equipped with a supplemental restraint system which consists of seven airbags.

The configurations are as follows.

- Driver's and front passenger's **frontal** airbags
- Driver's and front passenger's **side** airbags
- **Curtain** airbags (for driver, front passenger and rear passengers)
- **Knee airbag** for driver

These SRS airbags are designed only to be a supplement to the primary protection provided by the seatbelt.

The system also controls front seatbelt pretensioners. For operation instructions and precautions concerning the seatbelt pretensioner, refer to "Seatbelt Pretensioners" ☞P46.

■ General Precautions regarding SRS Airbag System

⚠ WARNING

To obtain maximum protection in the event of an accident, the driver and all passengers must always wear seatbelts when in the vehicle. The SRS airbag is designed only to be a supplement to the primary protection provided by the seatbelt. It does not eliminate the need to fasten seatbelts. In combination with the seatbelts, it offers the best protection in case of a serious accident.

Not wearing a seatbelt increases the chance of severe injury or death in a crash even when the vehicle has the SRS airbag.

For instructions and precautions concerning the seatbelt system, refer to "Seatbelts" ☞P41.

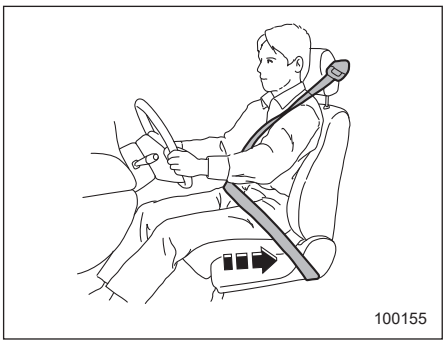
100155

⚠ WARNING

The SRS airbags deploy with considerable speed and force. Occupants who are not seated in proper upright position when the SRS airbag deploys could suffer serious injury. Because the SRS airbag needs enough space for deployment, the driver should always sit upright and well back in the seat as far from the steering wheel as practical while still maintaining full vehicle control, and the front passenger should move the seat as far back as possible and sit upright and well back in the seat.

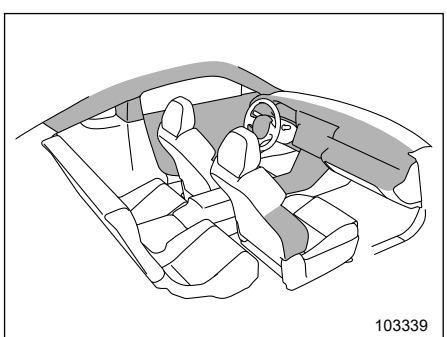
103339

⚠ WARNING

- **If you notice any damage or cracks where an SRS airbag is stored, have it replaced by an authorized SUBARU dealer.**
- **Do not strike the area around SRS airbag System component parts or subject the area to impact.**


102008

– CONTINUED –

⚠ WARNING

- **Do not sit or lean close to either door. The SRS side airbags are stored in both front seat seatbacks next to the door, and they provide protection by deploying rapidly in the event of a side impact collision. However, the force of SRS side airbag deployment can injure an occupant whose body is too close to an SRS airbag.**
- **Since this vehicle is equipped with SRS curtain airbags, do not sit or lean close to the door on either side. Do not put body parts out of the window. The SRS curtain airbags on both sides of the cabin are stored in the roof side (between the front pillar and a point behind the rear quarter glass), and they provide protection by deploying rapidly in the event of a side impact, rollover or an offset frontal collision. However, the force of its deployment can injure an occupant whose body is too close to an SRS airbag.**
- **Do not sit or lean close to the SRS airbag. Because the SRS airbag deploys with considerable speed and force to protect in high speed collisions, the force of an airbag can injure an occupant whose body is too close to SRS airbag.**

  It is also important to wear seatbelts to help avoid injuries that can result when the SRS airbag contacts an occupant not in their proper position.

  Even when properly positioned, there remains a possibility that an occupant may suffer minor injury, such as abrasions and bruises to the face or arms, because of the SRS airbag deployment force.

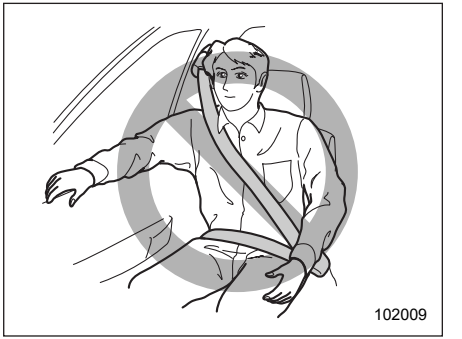

⚠ WARNING

- **Keep arms away from either door or its internal trim. They could be injured in the event of SRS side airbag deployment.**
- **Do not place any objects over or near the SRS airbag cover or between you and the SRS airbag. If the SRS airbag deploys, these objects could interfere with its proper operation and could be propelled inside the vehicle, causing injury.**

⚠ CAUTION

- When the SRS airbag deploys, some smoke will be released. This smoke could cause breathing problems for people with a history of asthma or other breathing trouble. If you or your passengers have breathing problems after SRS airbag deploys, get fresh air promptly.
- A deploying SRS airbag releases hot gas. Occupants could get burned if they come into direct contact with the hot gas.

NOTE

- When you sell your vehicle, we urge you to inform the buyer that the vehicle is equipped with SRS airbags. Also, notify the buyer of the applicable section in this Owner's Manual.
- If the SRS airbag deploys, fuel supply will be cut off to reduce the risk of fire caused by leaking fuel. For details about restarting of the engine, refer to "If Your Vehicle Is Involved in an Accident" ☞P333.

■ General Precautions regarding SRS Airbag System for Accessories and Any Objects

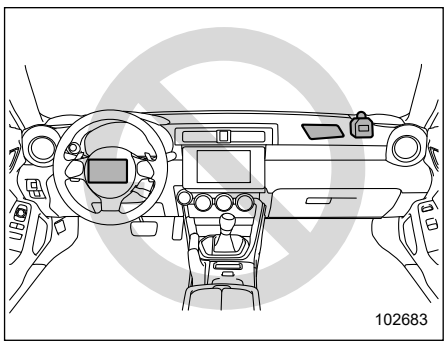

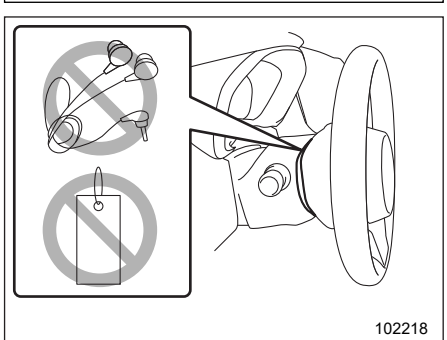

⚠ WARNING

- Do not put any objects (including straps or cords) over the steering wheel pad, column cover, or dashboard.
  - These objects could be entangled with the steering wheel, preventing the SRS frontal airbag, etc. from operating properly.
  - If the SRS frontal airbag deploys, these objects could be propelled inside the vehicle, causing injury.
- Do not put any objects under the driver's side of the instrument panel. If the SRS knee airbag deploys, the objects could interfere with its proper operation and could be propelled inside the vehicle, causing injury.

– CONTINUED –

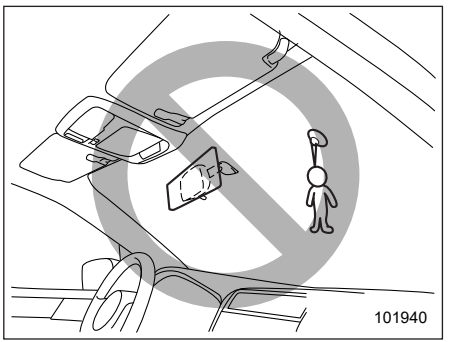

⚠ WARNING

Do not attach accessories to the windshield, or fit an extra-wide mirror over the inside rear view mirror. If the SRS airbag deploys, those objects could become projectiles that could seriously injure vehicle occupants.

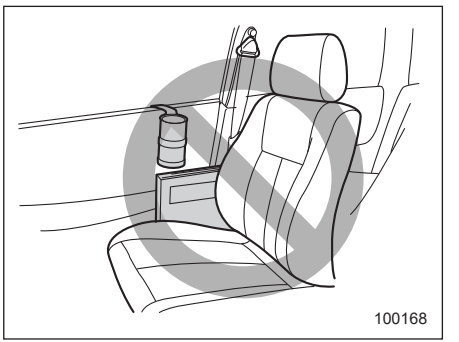

⚠ WARNING

- **Do not attach accessories to the door trim or near either SRS side airbags and do not place objects near the SRS side airbags. In the event of SRS side airbag deployment, they could be propelled dangerously toward the vehicle's occupants and cause injuries.**
- **Do not attach a hands-free microphone or any other accessory to a front pillar, a center pillar, a rear pillar, the windshield, a side window, or any other cabin surface that would be near a deploying SRS curtain airbag. A hands-free microphone or other accessory in such a location could be propelled through the cabin with great force by the curtain airbag, or it could prevent correct deployment of the curtain airbag. In either case, the result could be serious injuries.**
- **Never hang or place coat hangers or other hard or pointed objects near the side windows. If such items are present when the SRS curtain airbags deploy, they could be thrown through the passenger compartment and cause serious injuries. They could also prevent proper operation of the SRS curtain airbags.**

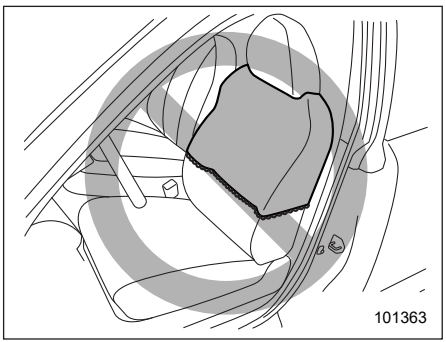

⚠ WARNING

- **Do not put any kind of clothes or other objects over the front seatback and do not attach labels or stickers to the front seat surface on or near the SRS side airbag. They could prevent proper deployment of the SRS side airbag, reducing protection available to the front seat's occupant.**
- **Do not install a seat cover unless it is a genuine SUBARU seat cover exclusively designed for use with the SRS airbag. Even when using a genuine SUBARU seat cover, the SRS side airbag may not function normally if the seat cover is not installed correctly.**

■ General Precautions regarding SRS Airbag System and Children



⚠ WARNING

Seat children in the rear seat properly restrained at all times. The SRS airbag deploys with considerable speed and force and can injure or even kill children, especially if they are not restrained or improperly restrained. Because children are lighter and weaker than adults, their risk of being injured from deployment is greater.

– CONTINUED –

For that reason, we strongly recommend that ALL children (including those in child restraint systems) sit in the REAR seat properly restrained at all times in a child restraint system or in a seatbelt, whichever is appropriate for the child's age, height and weight.

Secure ALL types of child restraint systems (including forward facing child restraint system) in the REAR seats at all times.

According to accident statistics, children are safer when properly restrained in the rear seating positions than in the front seating positions.

For instructions and precautions concerning the child restraint system, refer to "Child Restraint Systems" ☞P48.

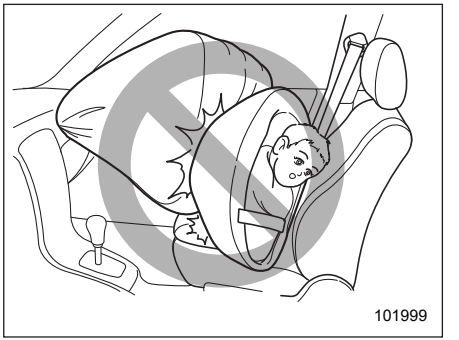

⚠ WARNING

NEVER INSTALL A CHILD RESTRAINT SYSTEM IN THE FRONT SEAT. DOING SO RISKS SERIOUS INJURY OR DEATH TO THE CHILD BY PLACING THE CHILD'S HEAD TOO CLOSE TO THE SRS AIRBAG.

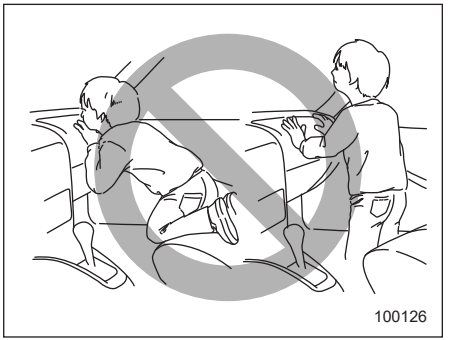

⚠ WARNING

Never allow a child to stand up or kneel on the front passenger's seat. The SRS airbag deploys with considerable force and can injure or even kill the child.

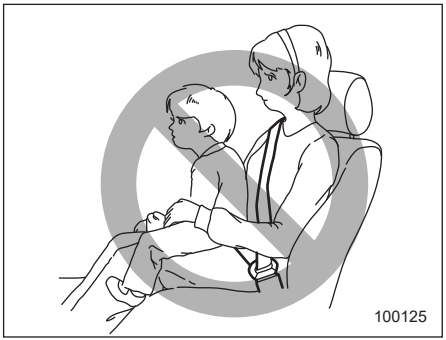

WARNING

Never hold a child on your lap or in your arms. The SRS airbag deploys with considerable force and can injure or even kill the child.

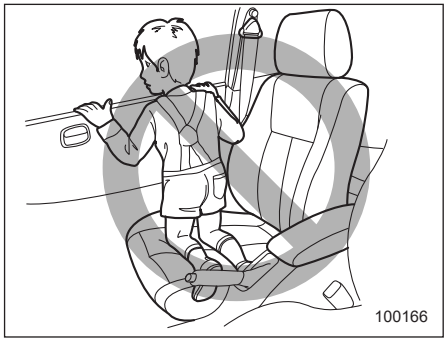

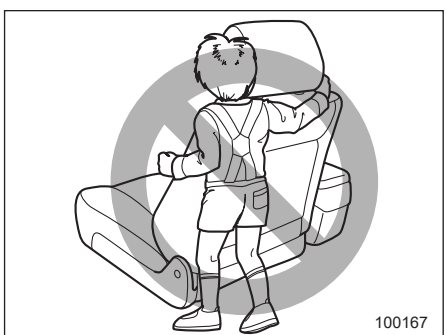

WARNING

- **Never allow a child to do the following.**
  - **Kneel on any passenger's seat facing the side window.**
  - **Wrap his/her arms around the front seat seatback.**
  - **Put his/her head, arms or other parts of the body out of the window.**

  In the event of an accident, the force of SRS side airbag and/or SRS curtain airbag deployment could injure the child seriously because his/her head, arms or other parts of the body are too close to the SRS side airbag and/or SRS curtain airbag.
- **Since your vehicle is also equipped with a front passenger's SRS frontal airbag, children should be placed in the rear seat anyway and should be properly restrained at all times.**

– CONTINUED –

■ Components

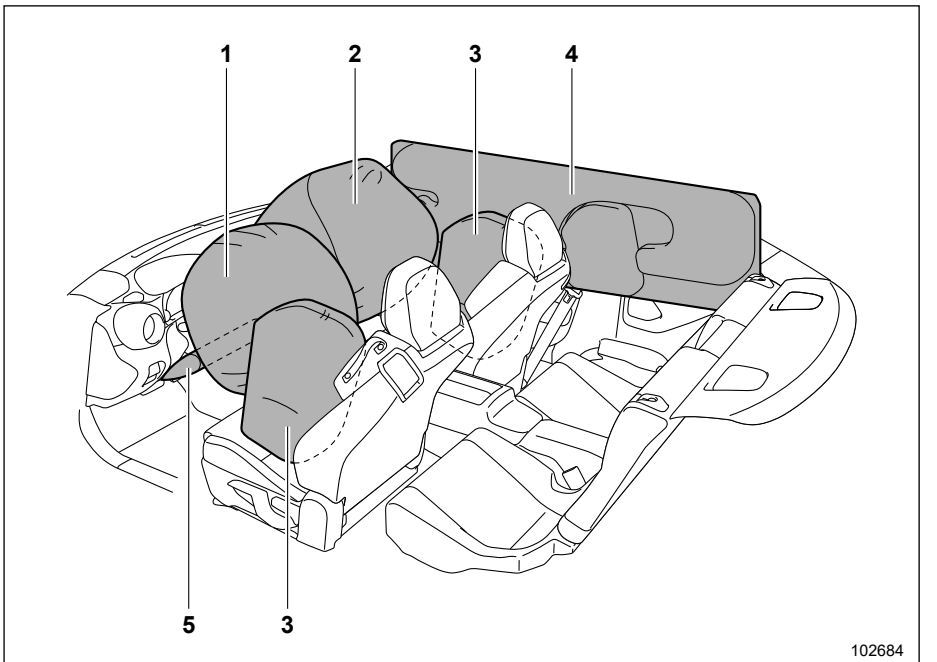

The SRS airbags are stowed in the following locations.

1) **Driver's SRS frontal airbag:** in the center portion of the steering wheel
2) **Front passenger's SRS frontal airbag:** near the top of the right side of dashboard
3) **SRS side airbag:** in the door side of each front seat seatback
4) **SRS curtain airbag:** in the roof side (between the front pillar and a point over the rear seat)
5) **SRS knee airbag:** under the steering column

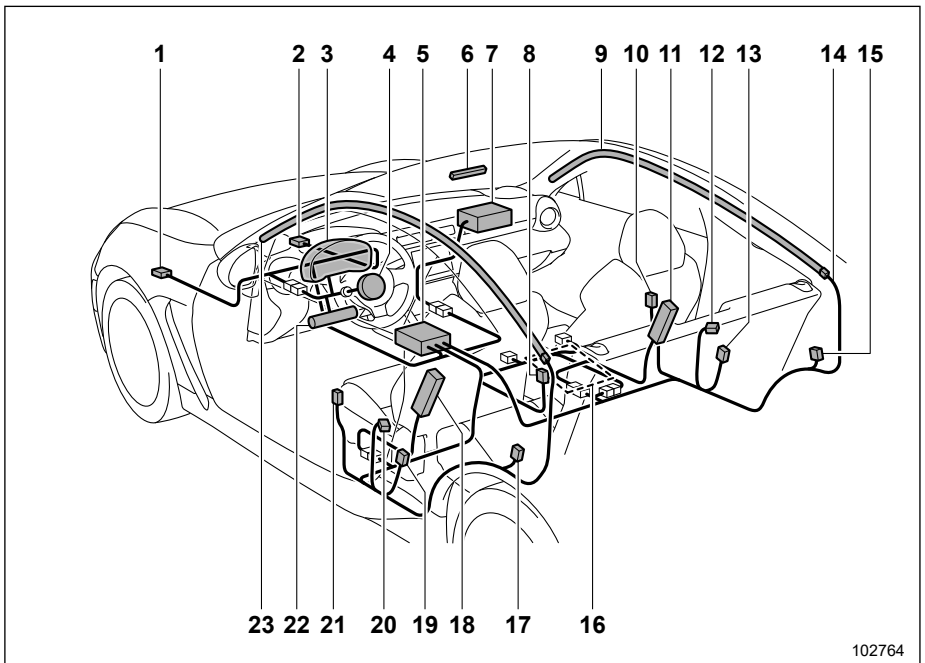

1) Front impact sensor (left-hand side)
2) Front impact sensor (right-hand side)
3) SRS airbag system warning light
4) Frontal airbag module (driver's side)
5) Airbag control module (including impact sensor and rollover sensor)
6) Front passenger's frontal airbag ON and OFF indicator lights
7) Frontal airbag module (front passenger's side)
8) Seatbelt buckle switch (front passenger's side)
9) Curtain airbag module (right-hand side)
10) Side impact sensor (door right-hand side)
11) Side airbag module (front passenger's side)
12) Seatbelt pretensioner and adaptive force limiter (front passenger's side)
13) Side impact sensor (center pillar right-hand side)
14) Airbag wiring
15) Side impact sensor (rear wheel house right-hand side)
16) Front passenger's occupant detection sensors
17) Side impact sensor (rear wheel house left-hand side)
18) Side airbag module (driver's side)
19) Side impact sensor (center pillar left-hand side)
20) Seatbelt pretensioner (driver's side)
21) Side impact sensor (door left-hand side)
22) Knee airbag module (driver's side)
23) Curtain airbag module (left-hand side)

– CONTINUED –

■ SUBARU Advanced Frontal Airbag System

This vehicle is equipped with a SUBARU advanced frontal airbag system that complies with the new advanced frontal airbag requirements in the amended Federal Motor Vehicle Safety Standard (FMVSS) No. 208.

The SUBARU advanced frontal airbag system automatically determines the deployment force of the driver's SRS frontal airbag at the time of deployment as well as whether or not to activate the front passenger's SRS frontal airbag and, if activated, the deployment force of the SRS frontal airbag at the time of deployment.

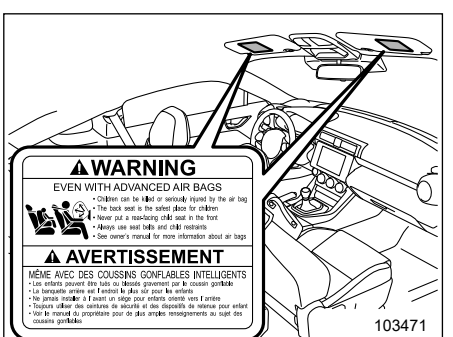

This vehicle has warning labels on the driver's and front passenger's sun visors beginning with the phrase "EVEN WITH ADVANCED AIR BAGS" and a tag attached to the glove box lid beginning with the phrase "Even with Advanced Air Bags". Make sure that you carefully read the instructions on the warning labels and tag.

Always wear your seatbelt. The SUBARU advanced frontal airbag system is a supplemental restraint system and must be used in combination with a seatbelt. All occupants should wear a seatbelt or be seated in an appropriate child restraint system.

For the locations of the SRS airbags, refer to "Components" ☞P70.

In a moderate to severe frontal collision, the following components deploy.

- SRS frontal airbag for driver
- SRS frontal airbag for front passenger
- SRS curtain airbag*
- SRS knee airbag for driver

*: When an offset frontal collision that is severe enough to deploy the front airbag occurs.

These components supplement the seatbelts by reducing the impact to the occupant's head, chest and knees.

NOTE

Only driver's SRS frontal airbag and front passenger's SRS frontal airbag are controlled by the SUBARU advanced frontal airbag system.

▼ Driver's SRS frontal airbag

The driver's SRS frontal airbag uses a dual stage inflator. The inflator operates in different ways depending on the severity of impact.

▼ Front passenger's SRS frontal airbag

The front passenger's SRS frontal airbag uses a dual stage inflator. The inflator operates in different ways depending on the severity of impact.

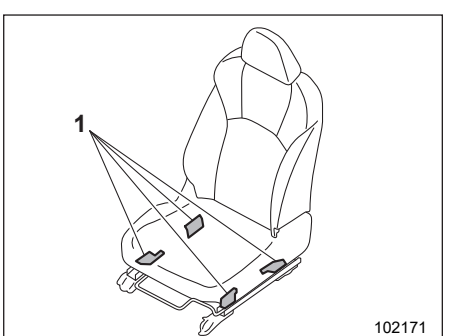

1) Occupant detection sensors

The occupant detection sensors are installed between the seat and seat rails, and monitor the physique and posture of the front passenger. Using this information, the occupant detection system determines whether the front passenger's SRS frontal airbag should be deployed or not.

The occupant detection system may not inflate the front passenger's SRS frontal airbag even when the driver's SRS frontal airbag deploys. This is normal. In this case, although the front passenger's SRS frontal airbag does not operate, the front passenger's seatbelt pretensioner operates with the driver's seatbelt pretensioner. For details about the seatbelt pretensioner, refer to "Seatbelt Pretensioners" ☞P46.

⚠ CAUTION

Observe the following precautions. Failure to do so may prevent the SUBARU advanced frontal airbag system from functioning correctly or cause the system to fail.

- **Do not apply any strong impact to the front passenger's seat such as by kicking.**
- **Do not let rear passengers rest their feet between the front seatback and seat cushion.**
- **Do not remove or disassemble the front passenger's seat.**
- **Do not install any accessory (such as an audio amplifier) other than a genuine SUBARU accessory under the front passenger's seat.**
- **Do not place anything (shoes, umbrella, etc.) under the front passenger's seat.**
- **Do not place any objects (books, etc.) around the front passenger's seat.**
- **Do not use the front passenger's seat with the head restraint removed.**
- **Do not leave any articles on the front passenger's seat or the seatbelt tongue and buckle engaged when you leave your vehicle.**
- **Do not put sharp object(s) on the seat or pierce the seat upholstery.**
- **Do not place a magnet near the seatbelt buckle and the seatbelt retractor.**
- **Do not use front seats with their backward-forward position and seatback not being locked into place securely. If any of them are not locked securely, adjust them again. For adjusting procedure, refer to "Manual Seat" ☞P35 (models equipped with manual seats only).**

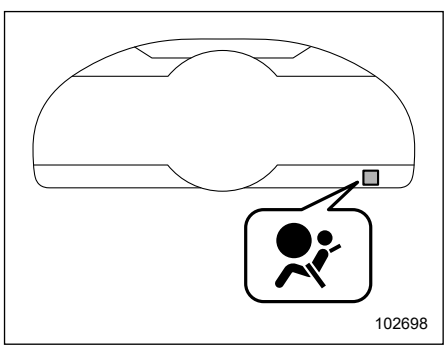

SRS airbag system warning light

If the seatbelt buckle switch and/or front passenger's occupant detection system have failed, the SRS airbag system warning light will illuminate. If the SRS airbag system warning light illuminates, immediately stop the vehicle in a safe place, and consult a SUBARU dealer.

– CONTINUED –

If your vehicle has sustained impact, this may affect the proper function of the SUBARU advanced frontal airbag system. Have your vehicle inspected at your SUBARU dealer. Do not use the front passenger's seat while driving the vehicle to your SUBARU dealer.

▼ Passenger's frontal airbag ON and OFF indicator lights

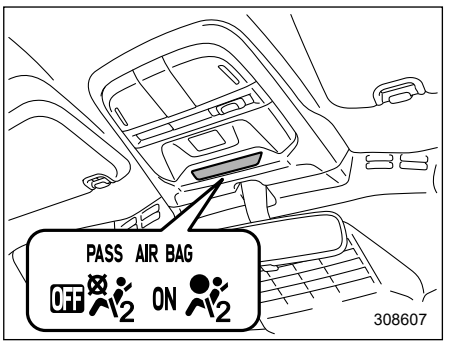

ON : Front passenger's frontal airbag ON indicator light

OFF : Front passenger's frontal airbag OFF indicator light

Refer to "Front Passenger's Frontal Airbag ON and OFF indicator lights" ☞P139.

▼ Occupant detection system

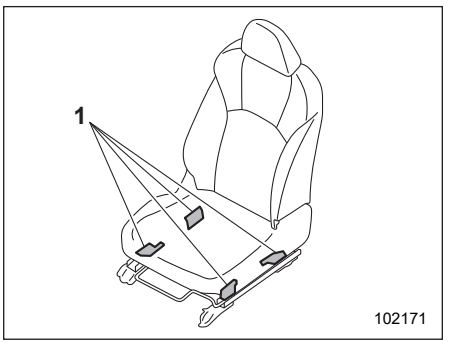

1) Occupant detection sensors

The occupant detection sensors are installed between the seat and seat rails, and monitor the physique and posture of the front passenger. Using this information, the occupant detection system determines whether the front passenger's SRS frontal airbag should be deployed or not.

⚠ WARNING

Do not kick the front passenger seat or subject it to severe impact. Otherwise, the SRS airbag system warning light may illuminate to indicate a malfunction of the front passenger occupant detection system. In this case, immediately stop the vehicle in a safe place, and consult a SUBARU dealer.

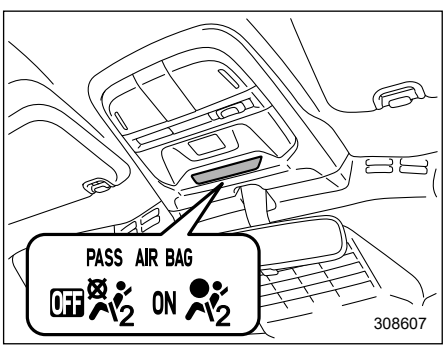

ON: Front passenger's frontal airbag ON indicator light

OFF: Front passenger's frontal airbag OFF indicator light

If the front passenger's frontal airbag ON and OFF indicator lights do not work properly, do not allow anyone to sit on the front passenger's seat and have the occupant detection system checked by your SUBARU dealer.

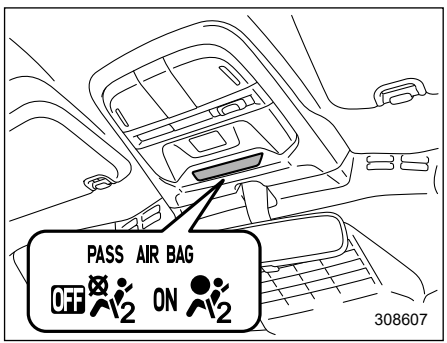

ON: Front passenger's frontal airbag ON indicator light

OFF: Front passenger's frontal airbag OFF indicator light

Also, if luggage is placed on the front passenger's seat, this may adversely affect the ability of the system to determine deployment. This may prevent the front passenger's frontal airbag ON and OFF indicator lights from working properly. Check that the indicator lights work properly.

When the OFF indicator light turns off and the ON indicator light illuminates, the front passenger's frontal airbag may deploy during a collision. Remove luggage from the front passenger's seat.

▼ Conditions in which front passenger's SRS frontal airbag is not activated

The front passenger's SRS frontal airbag will not be activated when any of the following conditions are met regarding the front passenger's seat:

- The seat is empty.
- The seat is equipped with an appropriate child restraint system and an infant or a child is restrained in it. (See WARNING that follows.)
- The front passenger's occupant detection system is malfunctioning.

– CONTINUED –

⚠ WARNING

NEVER INSTALL A CHILD RESTRAINT SYSTEM IN THE FRONT PASSENGER'S SEAT EVEN IF THE FRONT PASSENGER'S SRS FRONTAL AIRBAG IS DEACTIVATED. Be sure to install it in the REAR seat in a correct manner. Also, it is strongly recommended that any child restraint system (including any booster seat) be installed in the REAR seat, and that even children who have outgrown a child restraint system be also seated in the REAR seat. This is because children sitting in the front passenger's seat may be killed or severely injured should the front passenger's SRS frontal airbag deploy. REAR seats are the safest place for children.

⚠ CAUTION

Observe the following precautions as it increase the load on the front passenger's seat and not work properly.

- **Do not install any accessory such as a table or TV onto the seatback.**
- **Do not allow the rear seat occupant to place his/her hands or legs on the front passenger's seatback, or allow him/her to pull the seatback.**

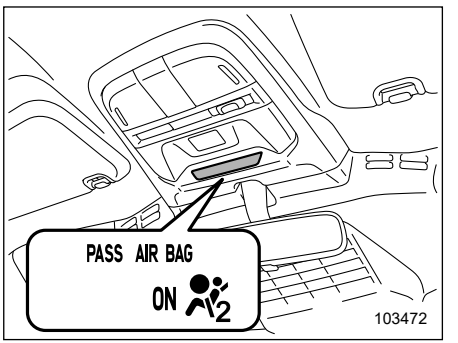

ON : Front passenger's frontal airbag ON indicator light

If you think that the Front passenger's frontal airbag ON/OFF indicator light is incorrect, take the following actions.

- Ensure that no article is placed on the seat other than the occupant.
- Ensure that the backward-forward position and seatback of front passenger's seat are locked into place securely by moving the seat back and forth. (Models equipped with manual seats only)

If the ON indicator light still remains illuminated while the OFF indicator light turns off after taking relevant corrective actions described above, immediately contact your SUBARU dealer for an inspection.

Even if the system has passed the dealer inspection, it is recommended that on subsequent trips the small adult always take the rear seat.

NOTE

When a small adult is seated in the front passenger's seat, the SUBARU advanced frontal airbag system may or may not activate the front passenger's SRS frontal airbag depending on the occupant's seating posture. If the OFF indicator light remains illuminated while the ON indicator light turns off when a small adult is seated in the front passenger's seat, see next section "Conditions in which front passenger's SRS frontal airbag is activated."

▼ Conditions in which front passenger's SRS frontal airbag is activated

The front passenger's SRS frontal airbag will be activated for deployment upon impact when any of the following conditions are met regarding the front passenger's seat.

- When the seat is occupied by an adult.
- When certain items (e.g. jug of water) are placed on the seat.

⚠ CAUTION

When the front passenger's seat is occupied by an adult, observe the following precautions.

Failure to do so may lessen the load on the front passenger's seat, deactivating the front passenger's SRS frontal airbag despite the fact that the seat is occupied by an adult.

This may result in personal injury.

- **Do not allow the rear seat occupant to lift the front passenger's seat cushion using his/her feet.**
- **Do not place any article under the front passenger's seat, or squeeze any article from behind and under the seat. This may lift the seat cushion.**
- **Do not squeeze any article between the front passenger's seat and side trim/pillar, door or center console box. This may lift the seat cushion.**

▽ **If the passenger's frontal airbag OFF indicator light illuminates and the ON indicator light turns off even when the front passenger's seat is occupied by an adult**

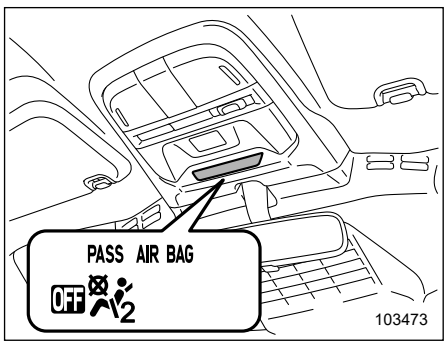

OFF: Front passenger's frontal airbag OFF indicator light

This can be caused by the adult incorrectly sitting in the front passenger's seat.

1. Turn the ignition switch to the "OFF" position.
2. Ask the front passenger to set the seatback to the upright position, sit up straight in the center of the seat cushion, correctly fasten the seatbelt, position his/her legs out forward, and adjust the seat to the rearmost position.
3. Turn the ignition switch to the "ON" position.

If the OFF indicator light remains illuminated while the ON indicator light remains off, take the following actions.

1. Turn the ignition switch to the "OFF" position.
2. Make sure that the front passenger does not use a blanket, extra seat cushion, seat cover, seat heater or massager, etc.
3. If wearing excessive layers of clothing, the front passenger should remove any unnecessary items before sitting in the front passenger's seat, or should sit in a rear seat.
4. Turn the ignition switch to the "ON" position and wait 6 seconds to allow the system to complete self-checking. Following the system check, both indicator lights turn off for 2 seconds. Now, the ON indicator light should illuminate while the OFF indicator light remains off.

If the OFF indicator light still remains illuminated while the ON indicator light remains off, ask the occupant to move to the rear seat and immediately contact your SUBARU dealer for an inspection.

– CONTINUED –

▼ Operation

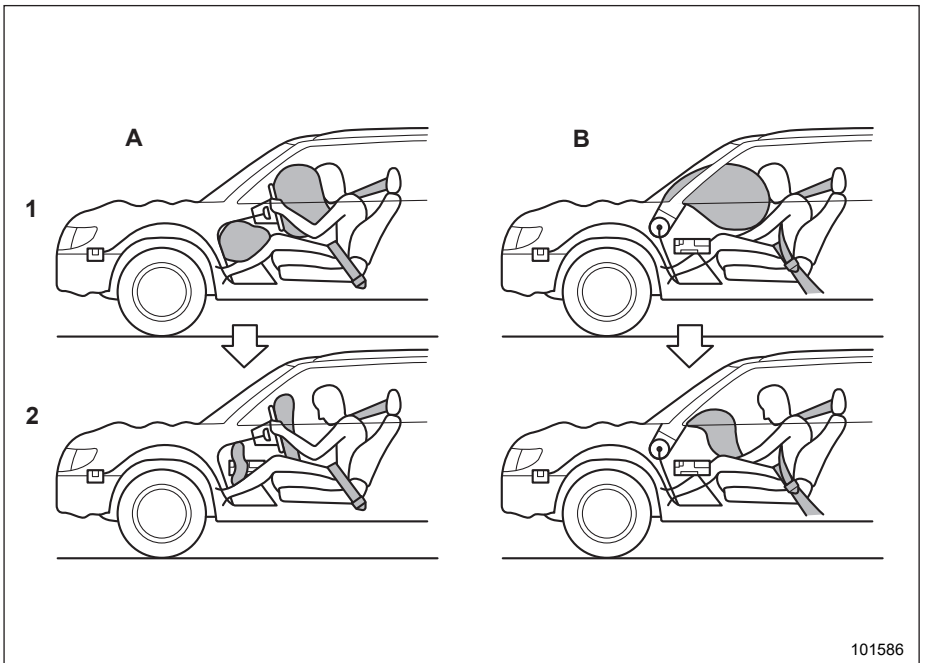

A) Driver's side
B) Passenger's side

1) SRS AIRBAGs deploy as soon as a collision occurs.
2) After deployment, SRS AIRBAGs start to deflate immediately so that the driver's vision is not obstructed.

The SRS airbags can function only when the ignition switch is in the "ON" position.

The SUBARU advanced frontal airbag system is designed to determine the activation or deactivation condition of the front passenger's SRS frontal airbag depending on the characteristic of item(s) or person on the front passenger's seat monitored by the front passenger's occupant detection sensors. For this reason, only the driver's SRS frontal airbag may deploy in the event of a collision, but this does not mean failure of the system.

If the following sensors detect a predetermined amount of force during a frontal collision, the control module sends signals to the airbag module(s) (only driver's module or both driver's and front passenger's modules) instructing the module(s) to inflate the SRS frontal airbag(s).

- The front impact sensors
- The impact sensors in the airbag control module

On the driver's side, the SRS knee airbag also inflates with the SRS frontal airbag.

The driver's and front passenger's SRS frontal airbags use dual stage inflators.

▼ After deployment

After deployment, the SRS airbag immediately starts to deflate so that the driver's vision is not obstructed and the driver's ability to maintain control of the vehicle is not impaired.

Both when only the driver's SRS frontal airbag deploys and the driver's and front passenger's SRS frontal airbags deploy, the driver's and front passenger's seatbelt pretensioners operate at the same time.

When the SRS airbag deploys, a sudden, fairly loud inflation noise will be heard and some smoke will be released. These occurrences are a normal result of the deployment. This smoke does not indicate a fire in the vehicle.

⚠ CAUTION

Do not touch the SRS airbag system components around the steering wheel and dashboard with bare hands right after deployment. Doing so can cause burns because the components can be very hot as a result of deployment.

▼ Example of the type of accident

The driver's SRS frontal airbag and front passenger's SRS frontal airbag are designed as follows.

- To deploy in the event of an accident involving a moderate to severe frontal collision
- To function on a one-time-only basis

The driver's SRS frontal airbag and front passenger's SRS frontal airbag are not designed as follows.

- To deploy in most lesser frontal impacts*1
- To deploy in most side or rear impacts or in most rollover accidents*2

*1: Because the necessary protection can be achieved by the seatbelt alone.

*2: Because deployment of only the driver's SRS frontal airbag or both the driver's and front passenger's SRS frontal airbags would not protect the occupant in those situations.

SRS airbag deployment depends on the level of force experienced in the passenger compartment during a collision. That level differs from one type of collision to another, and it may have no bearing on the visible damage done to the vehicle itself.

– CONTINUED –

▽ **Example of accident in which the driver's/driver's and front passenger's SRS frontal airbag(s) will most likely deploy**

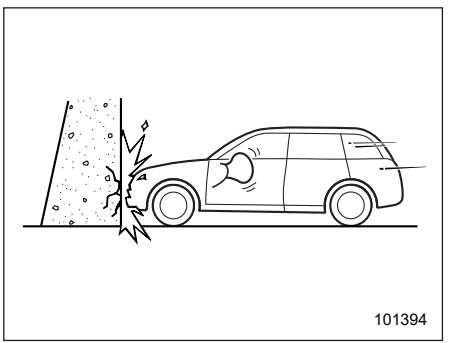

A head-on collision against a thick concrete wall at a vehicle speed of 12 to 19 mph (20 to 30 km/h) or higher activates only the driver's SRS frontal airbag or both driver's and front passenger's SRS frontal airbags. The airbag(s) will also be activated when the vehicle is exposed to a frontal impact similar in fashion and magnitude to the collision described above.

▽ **Examples of the types of accidents in which it is possible that the driver's/driver's and front passenger's SRS frontal airbag(s) will deploy**

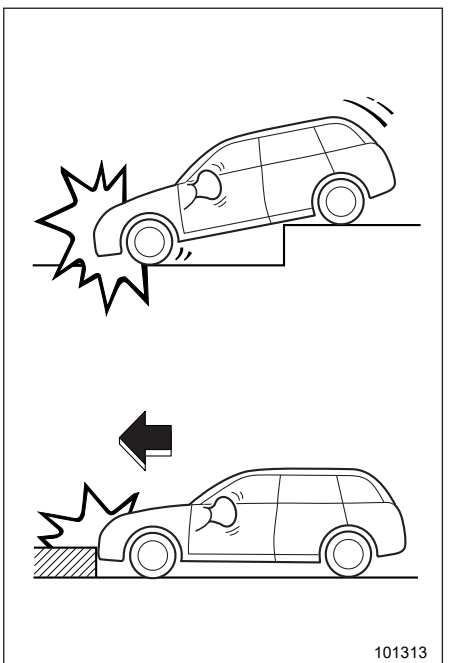

Only the driver's SRS frontal airbag or both driver's and front passenger's SRS frontal airbags may be activated when the vehicle sustains a hard impact in the undercarriage area from the road surface (such as when the vehicle plunges into a deep ditch, is severely impacted or knocked hard against an obstacle on the road such as a curb).

▽ **Examples of the types of accidents in which deployment of the driver's/driver's and front passenger's SRS frontal airbag(s) is unlikely to occur**

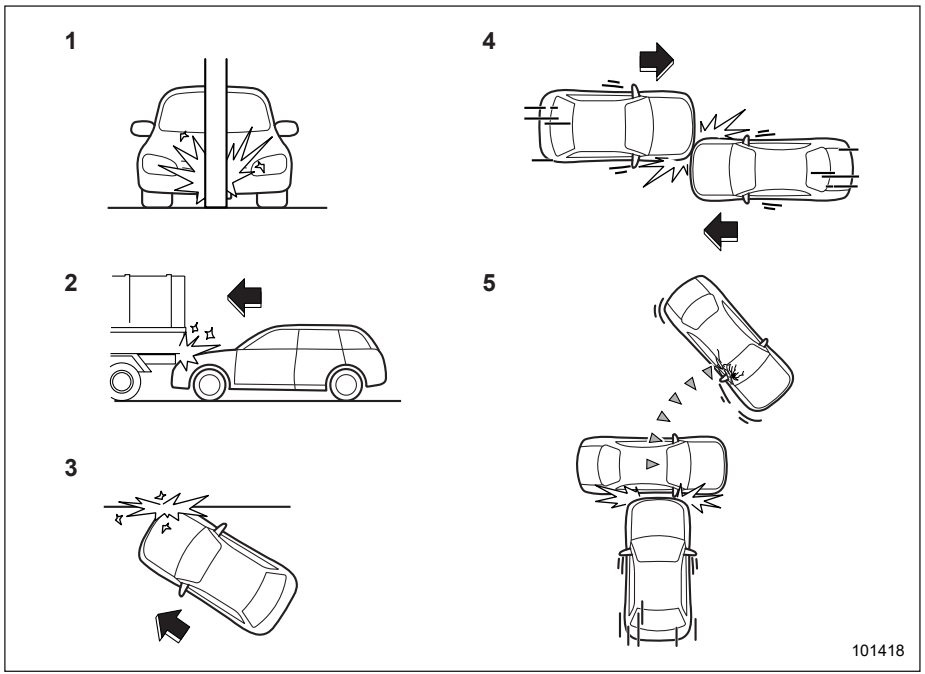

1) The vehicle strikes an object, such as a telephone pole or sign pole.
2) The vehicle slides under the load bed of a truck.
3) The vehicle sustains an oblique offset frontal impact.
4) The vehicle sustains an offset frontal collision.
5) The vehicle strikes an object that can move or deform, such as a parked vehicle.

There are many types of collisions which might not necessarily require deployment of driver's/driver's and front passenger's SRS frontal airbag(s). In the event of accidents like those illustrated, the driver's/driver's and front passenger's SRS frontal airbag(s) may not deploy depending on the level of accident forces involved.

– CONTINUED –

▽ **Examples of the types of accidents in which the driver's/ driver's and front passenger's SRS frontal airbag(s) are not designed to deploy in most cases**

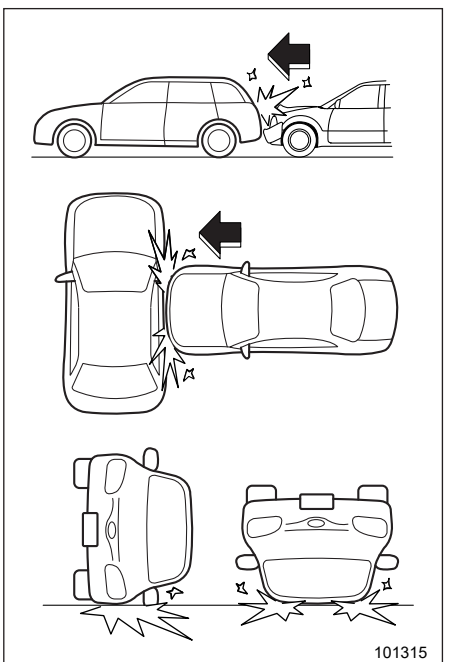

The driver's and front passenger's SRS frontal airbags are not designed to deploy in most of the following cases.

- If the vehicle is struck from the side or from behind
- If the vehicle rolls onto its side or roof
- If the vehicle is involved in a low-speed frontal collision

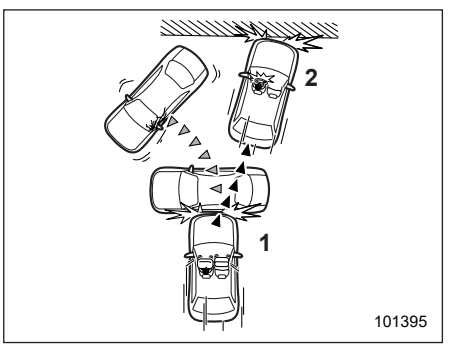

1) First impact
2) Second impact

In an accident where the vehicle is impacted more than once, the driver's and/or front passenger's SRS frontal airbag(s) will deploy only once.

Example: In the case of a double collision, first with another vehicle, then against a concrete wall in immediate succession, once either or both of the driver's and front passenger's SRS frontal airbags is/are activated on the first impact, it/they will not be activated on the second impact.

■ SRS Side Airbag and SRS Curtain Airbag

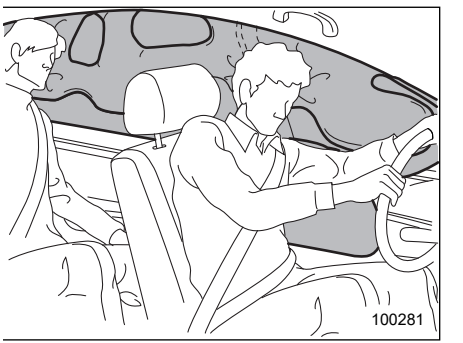

▼ SRS side airbag

The SRS side airbag is stored in the door side of each front seat seatback, which bears an "SRS AIRBAG" mark.

In a moderate to severe side impact collision, the SRS side airbag on the impacted side of the vehicle deploys between the occupant and the door panel and supplements the seatbelt by reducing the impact on the occupant's chest and waist. The SRS side airbag operates only for front seat occupants.

▼ SRS curtain airbag

Your vehicle is equipped with a SUBARU SRS curtain airbag system that complies with the Federal Motor Vehicle Safety Standard (FMVSS) No. 226.

The SRS curtain airbag on each side of the cabin is stored in the roof side (between the front pillar and a point over the rear seat). An “SRS AIRBAG” mark is located at the top of each center pillar.

In a moderate to severe side impact collision, the SRS curtain airbag on the impacted side of the vehicle deploys between the occupant and the side window and supplements the seatbelt by reducing the impact on the occupant’s head.

In a rollover, SRS curtain airbags on both sides of the vehicle deploy between the occupant and the side window and supplement the seatbelt by reducing the impact to the occupant’s head.

In an offset frontal collision, SRS curtain airbags on both sides of the vehicle deploy between the occupant and the side window and supplement the seatbelt by reducing the impact to the occupant’s head and chest.

▼ Operation

The SRS side airbag and SRS curtain airbag can function only when the ignition switch is in the “ON” position.

The following airbags deploy independently of each other since each has its own impact sensor.

- Driver’s SRS side airbag
- Front passenger’s SRS side airbag
- SRS curtain airbag (right-hand side)
- SRS curtain airbag (left-hand side)

Therefore, they may not both deploy in the same accident. Also, the SRS side airbag and SRS curtain airbag deploys independently of the driver’s and front passenger’s SRS frontal airbags in the steering wheel and instrument panel.

For the locations of the sensors and control modules, refer to "Components" ☞P70.

▼ After deployment

After the deployment, the SRS side airbag immediately starts to deflate.

The SRS curtain airbag remains inflated for a while following deployment then slowly deflates.

The SRS side airbag and SRS curtain airbag deploy even when no one occupies the seat on the side on which an impact is applied.

When the SRS side airbag and SRS curtain airbag deploy, a sudden, fairly loud inflation noise will be heard and some smoke will be released. These occurrences are a normal result of the deployment. This smoke does not indicate a fire in the vehicle.

⚠ CAUTION

Do not touch the SRS side airbag system components around the front seat seatback with bare hands right after deployment. Doing so can cause burns because the components can be very hot as a result of deployment.

After deployment, do not touch any part of the SRS curtain airbag system (from the front pillar to the part of the roof side over the rear seat). Doing so can cause burns because the components can be very hot as a result of deployment.

▼ Example of the type of accident

The SRS side airbag and SRS curtain airbag are designed as follows:

- To deploy in the event of an accident involving a moderate to severe side impact collision
- To function on a one-time-only basis

– CONTINUED –

The SRS side airbag and SRS curtain airbag are not designed to deploy in the following cases:

- In most lesser side impacts
- In most frontal or most rear impacts (because the SRS side airbag and SRS curtain airbag deployment would not protect the occupant in those situations)

The SRS curtain airbags are also designed to deploy when the vehicle is in an extremely inclined state such as during a rollover. They are not designed to deploy in most lesser inclined state.

SRS side airbag and SRS curtain airbag deployment depend on the level of force experienced in the passenger compartment during a side impact collision. That level differs from one type of collision to another, and it may have no bearing on the visible damage done to the vehicle itself.

▽ Example of the type of accident in which the SRS side airbag will most likely deploy

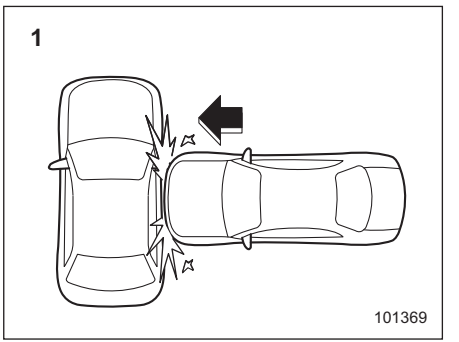

1) A severe side impact near the front seat.

▽ **Examples of the types of accidents in which the SRS curtain airbag will most likely deploy**

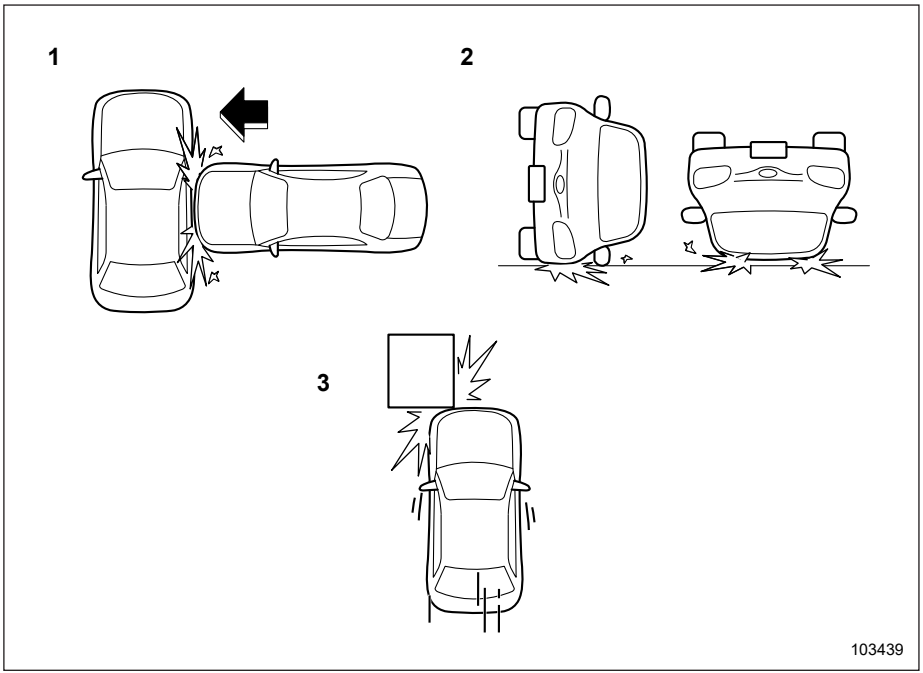

1) The vehicle is involved in a severe side impact near the front seat or the rear seat.
2) The vehicle rolls onto its side or the roof.
3) An offset frontal collision that is severe enough to deploy the front airbag.

– CONTINUED –

▽ **Examples of the types of accidents in which it is possible that the SRS side airbag and the SRS curtain airbag will deploy**

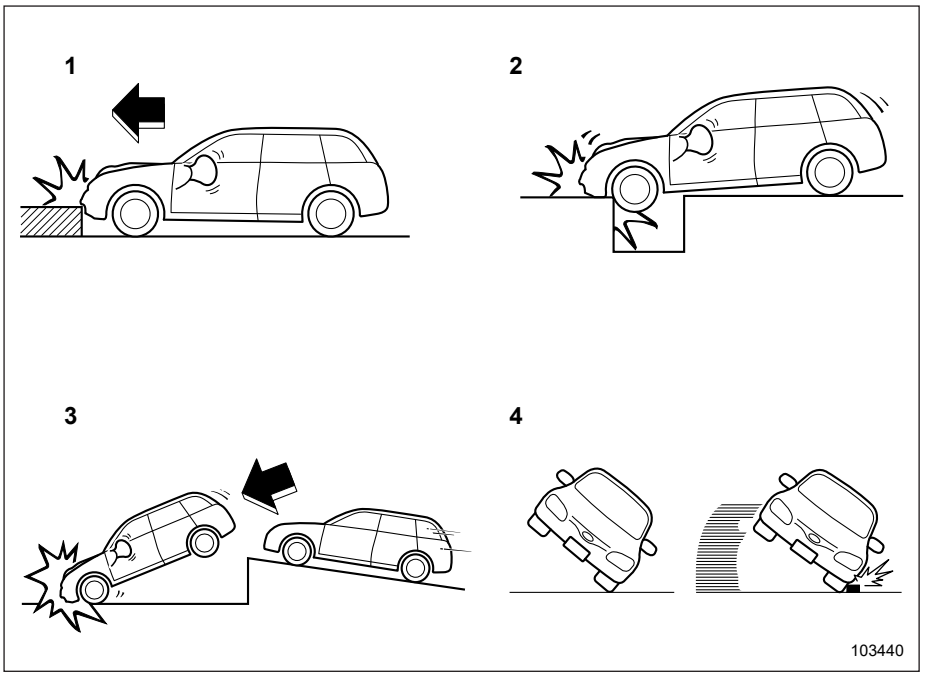

1) Hitting a curb, edge of pavement or hard surface
2) Falling into or jumping over a deep hole
3) Landing hard or vehicle falling
4) The angle of vehicle tip-up is marginal or the skidding vehicle's tires hit a curb-stone laterally.

It is possible that the SRS side and curtain airbags will deploy if a serious impact occurs to the underside of your vehicle. Some examples are shown in the illustration.

▽ Examples of the types of accidents in which the SRS side airbag is unlikely to deploy

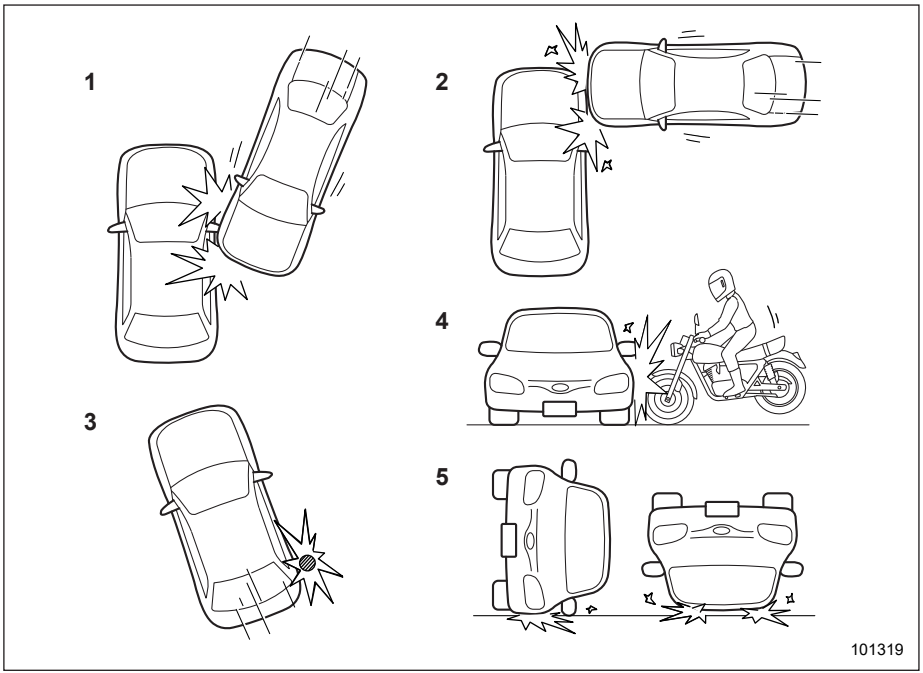

1) The vehicle is involved in an oblique side-on impact.
2) The vehicle is involved in a side-on impact in an area outside the vicinity of the passenger compartment.
3) The vehicle strikes a telephone pole or similar object.
4) The vehicle is involved in a side-on impact from a motorcycle.
5) The vehicle rolls onto its side or the roof.

There are many types of collisions which might not necessarily require SRS side airbag deployment. In the event of accidents like those illustrated, the SRS side airbag may not deploy depending on the level of accident forces involved.

– CONTINUED –

▽ Examples of the types of accidents in which the SRS curtain airbag is unlikely to deploy

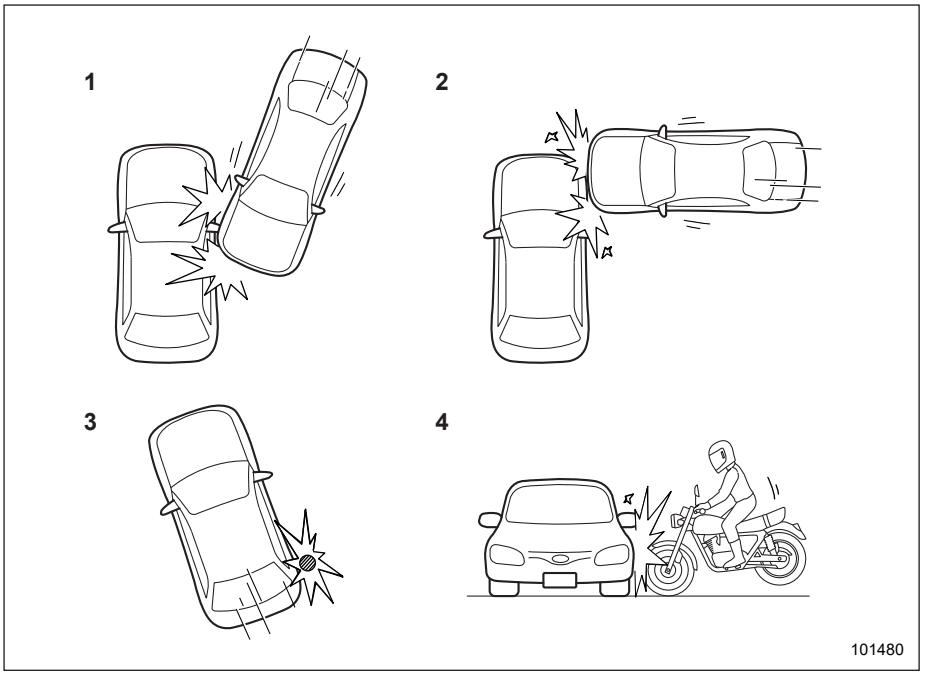

1) The vehicle is involved in an oblique side-on impact.
2) The vehicle is involved in a side-on impact in an area outside the vicinity of the passenger compartment.
3) The vehicle strikes a telephone pole or similar object.
4) The vehicle is involved in a side-on impact from a motorcycle.

There are many types of collisions which might not necessarily require SRS curtain airbag deployment. In the event of accidents like those illustrated, the SRS curtain airbag may not deploy depending on the level of accident forces involved.

▽ **Examples of the types of accidents in which the SRS side airbag and SRS curtain airbag are not designed to deploy in most cases**

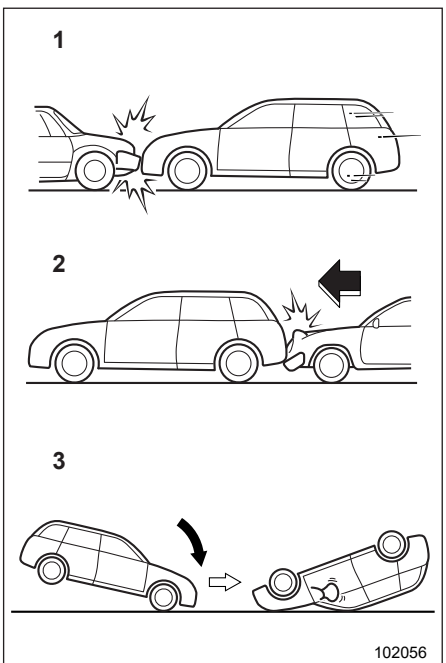

1) The vehicle is involved in frontal collision with another vehicle (moving or stationary).
2) The vehicle is struck from behind.
3) The vehicle pitches end over end.

In the event of accidents like those illustrated, the SRS side airbag and SRS curtain airbag are not designed to deploy in most cases.

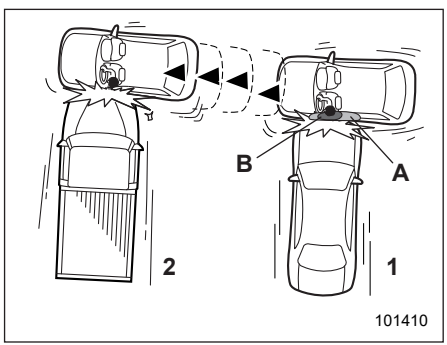

1) First impact
2) Second impact

A) SRS curtain airbag
B) SRS side airbag

In an accident where the vehicle is struck from the side more than once, the SRS side airbag and SRS curtain airbag deploy only once.

Example: In the case of a double side impact collision, first with one vehicle and immediately followed by another from the same direction, once the SRS side airbag and SRS curtain airbag are activated on the first impact, they will not be activated on the second.

■ SRS Airbag System Monitors

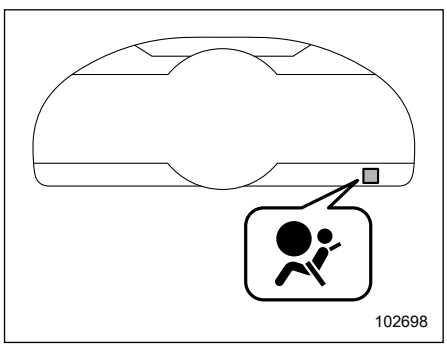

SRS airbag system warning light

A diagnostic system continually monitors the readiness of the SRS airbag system (including seatbelt pretensioners) with the ignition switch in the “ON” position. The SRS airbag system warning light will show normal system operation by illuminating for approximately 6 seconds when the ignition switch is turned to the “ON” position.

The following components are monitored by the indicator lights:

- Front impact sensor

– CONTINUED –

- Right-hand side
- Left-hand side

• Airbag control module (including impact sensor and rollover sensor)
• Frontal airbag module
- Driver's side
- Front passenger's side

• Knee airbag module
- Driver's side

• Side impact sensor
- Center pillar left-hand side
- Center pillar right-hand side
- Forward of rear wheel house left-hand side
- Forward of rear wheel house right-hand side
- Door left-hand side
- Door right-hand side

• Side airbag module
- Driver's side
- Front passenger's side

• Curtain airbag module
- Right-hand side
- Left-hand side

• Front seatbelt pretensioner and adaptive force limiter
- Front passenger's side

• Front seatbelt pretensioner
- Driver's side

• Seatbelt buckle switch
- Front passenger's side

• Front passenger's occupant detection sensor
• Front passenger's frontal airbag ON and OFF indicator lights
• All related wiring

⚠ WARNING

If the warning light exhibits any of the following conditions, immediately stop the vehicle in a safe place, and consult a SUBARU dealer. Unless a technician checks and repairs the system as needed, the seatbelt pretensioners and/or the SRS airbag will not operate properly in the event of a collision, which may result in injury.

- **Flashing or flickering of the warning light**
- **No illumination of the warning light when the ignition switch is first turned to the "ON" position**
- **Continuous illumination of the warning light**
- **Illumination of the warning light while driving**

■ SRS Airbag System Servicing

⚠ WARNING

- **When discarding an airbag module or scrapping the entire vehicle damaged by a collision, consult your SUBARU dealer.**
- **The SRS airbag has no user-serviceable parts. Do not use electrical test equipment on any circuit related to the SRS airbag system. For required servicing of the SRS airbag, consult your nearest SUBARU dealer. Tampering with or disconnecting the system's wiring could result in accidental inflation of the SRS airbag or could make the system inoperative, which may result in serious injury.**

⚠ CAUTION

If you need service or repair in areas indicated in the following list, have the work performed by an authorized SUBARU dealer. The SRS airbag control module, impact sensors and airbag modules are stored in these areas.

- Under the center of the instrument panel
- On both the right and left sides at the front of the vehicle
- Steering wheel and column and nearby areas
- Bottom of the steering column and nearby areas
- Top of the dashboard on front passenger's side and nearby areas
- Each front seat and nearby area
- Inside each center pillar
- Inside each door
- In each roof side (from the front pillar to a point over the rear seat)
- Between the rear seat cushion and rear wheel house on each side

In the event that the SRS airbag is deployed, replacement of the system should be performed only by an authorized SUBARU dealer. When the components of the SRS airbag system are replaced, use only genuine SUBARU parts.

NOTE

In the following cases, contact your SUBARU dealer as soon as possible.

- The front part of the vehicle was involved in an accident in which only the driver's SRS frontal airbag or both driver's and front passenger's SRS frontal airbags did not deploy.
- The pad of the steering wheel, the cover over the front passenger's SRS frontal airbag, or either roof side (from the front pillar to a point over the rear seat) is scratched, cracked, or otherwise damaged.
- The center pillar, door, rear wheel house or rear sub frame, or an area near these parts, was involved in an accident in which the SRS side airbag and SRS curtain airbag did not deploy.
- The fabric or leather of either front seatback is cut, frayed, or otherwise damaged.
- The rear part of the vehicle was involved in an accident in which no SRS airbag was deployed.

■ Precautions against Vehicle Modification

⚠ WARNING

- To avoid accidental activation of the system or rendering the system inoperative, which may result in serious injury, no modifications should be made to any components or wiring of the SRS airbag system.
  This includes following modifications.
  - Installation of custom steering wheels
  - Attachment of additional trim materials to the dashboard
  - Installation of custom seats
  - Replacement of seat fabric or leather
  - Installation of additional fabric or leather on the front seat
  - Attachment of a hands-free microphone or any other accessory to a front pillar, a center pillar, a rear pillar, the windshield, a side window or any other cabin surface that would be near a deploying SRS curtain airbag.

– CONTINUED –

- **Installation of additional electrical/electronic equipment such as a mobile two-way radio on or near the SRS airbag system components and/or wiring is not advisable. This could interfere with proper operation of the SRS airbag system.**
- **Modifications on or inside the front door panels for the purpose of a speaker replacement or sound insulation.**

- **The impact sensors, which detect the pressure of an impact, are located in the doors. Do not modify any components of the doors or door trims, such as the addition of door speakers for example. Any modifications to the doors will create a risk of the airbag system becoming inoperative or unintended airbag deployment.**
- **Installation of a tire of different size and construction from the tires specified on the vehicle placard attached to the driver's door pillar or specified for individual vehicle models in this Owner's Manual.**

⚠ CAUTION

Do not perform any of the following modifications. Such modifications can interfere with proper operation of the SRS airbag system.

- **Attachment of any equipment (bush bar, winches, snow plow, skid plate, etc.) other than genuine SUBARU accessory parts to the front end.**
- **Modification of the suspension system or front end structure.**
- **Attachment of any equipment (side steps or side sill protectors, etc.) other than genuine SUBARU accessory parts to the side body.**

Always consult your SUBARU dealer if you want to install any accessory parts on your vehicle.

■ How to Contact the Vehicle Manufacturer concerning Modifications for Persons with Disabilities That May Affect the Advanced Airbag System

Changing or moving any parts of the front seats, rear seat, seatbelts, front bumper, front side frame, radiator panel, instrument panel, combination meter, steering wheel, steering column, tire, suspension or floor panel can affect the operation of the SUBARU advanced airbag system. If you have any questions, you may contact the following SUBARU distributors.

<Continental U.S., Alaska and the District of Columbia>

Subaru of America, Inc.

Headquarters:

Customer Advocacy Department

One Subaru Drive

P.O. Box 9103

Camden, NJ 08101-9877

Texas office:

360 North Freeport Parkway,
Coppell TX 75019

1-800-SUBARU3 (1-800-782-2783)

<Hawaii>

Subaru Hawaii

2850-A Pukoloa St.,
Honolulu, HI 96819

877-215-0338

<Guam>

Shen's Corporation dba Prestige Automobiles

491 East Marine Corps Drive,
Dededo, Guam 96929

671-633-2698

<Canada>

Subaru Canada, Inc.

Customer Care
560 Suffolk Court, Mississauga, Ontario L5R 4J7

1-800-894-4212

There are currently no SUBARU distributors in any other U.S. territories. If you are in such an area, please contact the SUBARU distributor or dealer from which you bought your vehicle.

2-1. Keyless Access with Push-Button Start System 96
Safety Precautions 96
Locking and Unlocking with "Keyless Access" Entry Function 99
Unlock Using PIN Code Access 102
Power Saving Function 104
Power Saving Function of Access Key Fob 105
Disabling Keyless Access Function 105
Selecting Audible Signal Operation (If Equipped) 107
Selecting Hazard Warning Flasher Operation 108
Warning Chimes and Warning Indicator 108
When Access Key Fob Does Not Operate Properly 108
Replacing Battery of Access Key Fob 108
Replacing Access Key Fob 108
Certification for Keyless Access with Push-Button Start System 108
2-2. Immobilizer 110
Security Indicator Light 110
Key Replacement 110
Certification for Immobilizer System 110
2-3. Remote Keyless Entry System 111
Locking the Doors 112
Unlocking the Doors 112
Opening the Trunk Lid 112
Setting Audible Signal Operation (If Equipped) 112
Selecting Hazard Warning Flasher Operation 112
Vehicle Finder Function 112
Sounding a Panic Alarm 112
Replacing the Battery 113
Replacing Lost Transmitters 113
2-4. Door Locks 113
Locking and Unlocking from the Outside 113
Locking and Unlocking from the Inside 114
Key Lock-In Prevention Function 115
Battery Drainage Reduction Function 115
2-5. Alarm System 117
Alarm System Operation 117
Arming the System 117
Disarming the System 118
Alarm System Setting 118
If You Have Accidentally Triggered the Alarm System 118
2-6. Windows 119
Power Window Operation 119
Initialization of Power Window 121
2-7. Trunk Lid 122
To Open and Close the Trunk Lid from Outside 123
To Open the Trunk Lid from Inside 123
Internal Trunk Lid Release Handle 123

2-1. Keyless Access with Push-Button Start System

The following access key fobs are provided with the vehicle.

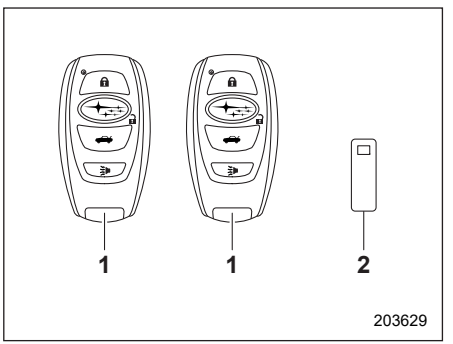

1) Access key fob
2) Key number plate

The keyless access with push-button start system allows you to perform the following functions when you are carrying the access key fob.

- Locking and unlocking of the doors, fuel filler lid
- Opening the trunk
- Starting and stopping the engine. For detailed information, refer to "Starting and Stopping Engine" ☞P233.
- Arming and disarming the alarm system. For detailed information, refer to "Alarm System" ☞P117.

NOTE

- **Locking and unlocking by the remote keyless entry system can also be controlled with the buttons on the access key fob. For detailed information, refer to "Remote Keyless Entry System" ☞P111.**
- **Carefully store the key number plate supplied with the access key fob. It is necessary for vehicle repair and additional registration of access key fobs. For details, refer to "Key Replacement" ☞P110.**

An emergency key is attached to each access key fob.

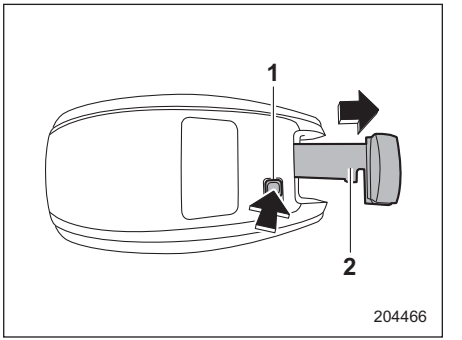

1) Release button
2) Emergency key

While pressing the release button of the access key fob, take out the emergency key.

The emergency key is used for locking and unlocking the driver's door.

■ Safety Precautions

⚠ WARNING

If you wear an implanted pacemaker or an implanted defibrillator, stay at least 8.7 in (22 cm) away from the transmitting antennas installed on the vehicle.

The radio waves from the transmitting antennas on the vehicle could adversely affect the operation of implanted pacemakers and implanted defibrillators.

If you wear electronic medical equipment other than an implanted pacemaker or an implanted defibrillator, before using the keyless access with push-button start system, refer to "Radio waves used for the keyless access with push-button start system" mentioned later, and contact the electronic medical equipment manufacturer for more information. The radio waves from the transmitting antennas on the vehicle could adversely affect the operation of the electronic medical equipment.

"Radio waves used for the keyless access with push-button start system"

- **The keyless access with push-button start system uses radio waves of the following frequency* in addition to the radio waves used for the remote keyless entry system. The radio waves are periodically output from the antennas installed on the vehicle as shown in the following illustrations.**

  ***: Radio frequency: 134 kHz**

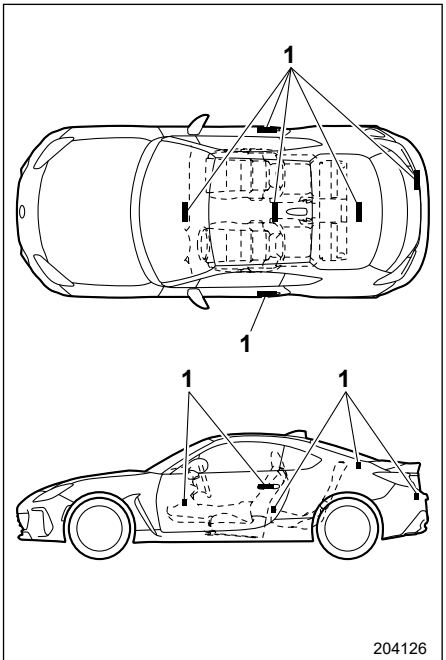

1) Antenna

– CONTINUED –

⚠ CAUTION

- **Never leave or store the access key fob inside the vehicle or within 6.6 ft (2 m) around the vehicle (e.g., in the garage). The access key fob may be locked inside the vehicle, or the battery may discharge rapidly. Note that the push-button ignition switch may not turn on in some cases depending on the location of the access key fob.**
- **The access key fob contains electronic components. Observe the following precautions to prevent malfunctions.**
  - **It is recommended to have the access key fob battery replaced at an authorized SUBARU dealer to avoid the risk of damage.**
  - **Do not get the access key fob wet. If the access key fob gets wet, wipe it off immediately and let it dry completely.**
  - **Do not apply strong impacts to the access key fob.**
  - **Never leave the access key fob in direct sunlight or anywhere that may become hot, such as on the dashboard. It may damage the battery or cause circuit malfunctions.**
  - **Do not wash the access key fob in an ultrasonic washer.**
  - **Do not leave the access key fob in humid or dusty locations. Doing so may cause malfunctions.**
  - **Keep the access key fob away from magnetic sources.**
  - **Do not leave the access key fob near a personal computer or home electrical appliance.**
  - **Do not leave the access key fob near a battery charger or any electrical accessories.**
  - **Do not apply metallic window tint or attach metallic objects to the windows.**
  - **Do not fit non genuine accessories or parts.**
- **If the access key fob is dropped, the integrated emergency key inside may become loose. Be careful not to lose the emergency key.**
- **When traveling in an airplane, do not press the button of the access key fob. If any button of the access key fob is pressed, radio waves are emitted and may affect the operation of the airplane. In a bag, take measures to prevent the buttons from being pressed accidentally.**

NOTE

- **The operational/non-operational setting for the keyless access function can be changed. For the setting procedure, refer to "Disabling Keyless Access Function" ☞P105.**
- **For detailed information about the operation method for the push-button ignition switch while the keyless access function is switched to the non-operational mode, refer to "Access Key Fob – If Access Key Fob Does Not Operate Properly" ☞P329.**
- **The keyless access with push-button start system uses weak radio waves. The status of the access key fob and environmental conditions may interfere with the communication between the access key fob and the vehicle under the following conditions, and it may not be possible to lock or unlock the doors or start the engine.**

- When operating near a facility where strong radio waves are transmitted, such as a broadcast station and power transmission lines.
- When products that transmit radio waves are used, such as an access key fob or a remote transmitter key of another vehicle.
- When carrying the access key fob of your vehicle together with the access key fob or the remote transmitter of another vehicle.
- When the access key fob is placed near wireless communication equipment such as a cell phone.
- When the access key fob is placed near a metallic object.
- When metallic accessories are attached to the access key fob.
- When carrying the access key fob with an electronic appliance such as a laptop computer.
- When the battery of the access key fob is discharged.

• The access key fob is always communicating with the vehicle and is continuously using the battery. Although the life of the battery varies depending on the operating conditions, it is approximately 1 to 2 years. If the battery becomes fully discharged, replace it with a new one.

• If an access key fob is lost, it is recommended that all of the remaining access key fobs be reregistered. For reregistration of an access key fob, contact a SUBARU dealer.

• For a spare access key fob, contact a SUBARU dealer.

• Up to 7 access key fobs can be registered for one vehicle.

• Do not leave the access key fob in the storage spaces inside the vehicle, such as the door pocket, dashboard or inside the corner of the trunk. Vibrations may damage the access key fob or turn on the switch, possibly resulting in a lockout.

• After the vehicle battery is discharged or replaced, initialization of the steering lock system may be required to start the engine. In this case, perform the following procedure to initialize the steering lock.

(1) Turn the push-button ignition switch to the “OFF” position. For details, refer to "Switching Power Status" ☞P129.
(2) Open and close the driver’s door.
(3) Wait for approximately 10 seconds.

When the steering is locked, the initialization is completed.

• Do not leave the access key fob in the following places.

- On the instrument panel
- On the floor
- Inside the glove box
- Inside the door trim pocket
- On the rear seat
- On the rear shelf
- Inside the trunk

• If you do, the following situations may occur.

- The access key fob is mistakenly locked inside the vehicle.
- A false warning issues although no malfunction actually occurs.
- No warning issues even when a malfunction occurs.

■ Locking and Unlocking with “Keyless Access” Entry Function

When the access key fob is carried within the operating range, the doors, the fuel filler lid can be locked/unlocked just by touching the door handle.

NOTE

The vehicle can also be locked/unlocked with the remote keyless entry system. For details, refer to "Remote Keyless Entry System" ☞P111.

– CONTINUED –

▼ Operating ranges

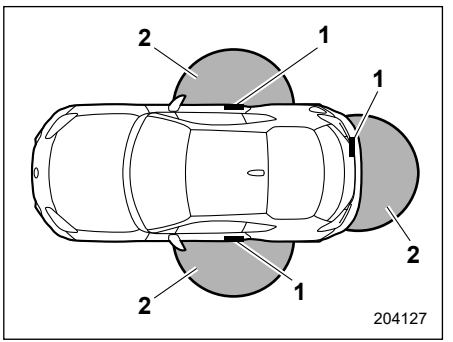

1) Antenna
2) Operating range (approximately 16 to 32 in (40 to 80 cm))

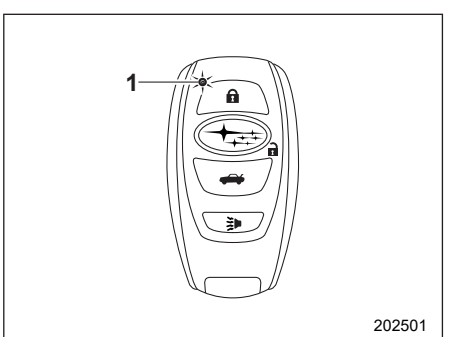

1) LED indicator

When the access key fob is within either of the operating ranges of the doors, the LED indicator on the access key fob flashes. When the keyless access functions are disabled, the LED indicator does not flash unless a button on the access key fob is pressed.

NOTE

• If the access key fob is placed too close to the vehicle body, the keyless access functions may not operate properly. If it does not operate properly, repeat the operation from farther away.

• If the access key fob is placed near the ground or in an elevated location from the ground, even if it is in the indicated operating range, the keyless access function may not operate properly.

• When the access key fob is within the operating range, it is possible for anyone, even someone who is not carrying the access key fob, to operate the keyless access function. Note that the keyless access function can be operated only by the door handle, door lock sensor or trunk opener button in the operating range in which the access key fob is detected.

• It is not possible to lock the doors, trunk lid and fuel filler lid using the keyless access function when the access key fob is inside the vehicle. However, depending on the status of the access key fob and the environmental conditions, the access key fob may be locked inside the vehicle. Before locking the vehicle, make sure that you have the access key fob.

• When the battery of the access key fob is discharged, or when operating it in a location with strong radio waves or noise (e.g., near a radio tower, power plant, broadcast station or an area where wireless equipment is used), or while talking on a cell phone, the operating ranges may be reduced, or the keyless access function may not operate.
In such a case, perform the procedure described in "Locking and Unlocking" ☞P330.

• The doors may lock or unlock when the car is being washed or exposed to a significant amount of water that touches the door handle while the key fob is still in the operating range.

▼ How to lock and unlock

It is possible to perform the following operations when you are carrying the access key fob.

• Lock and unlock the doors and the fuel filler lid

- Unlock the trunk lid

NOTE

• It is not possible to lock the doors and fuel filler lid using the keyless access function when the push-button ignition switch is in the “ACC” or “ON” position. Refer to "Switching Power Status" ☞P129.
• If the door handle is gripped with a gloved hand, the door lock may not be released.
• If the door lock sensor is touched four times or more repeatedly, the system will ignore the sensor operation.
• When performing the locking procedure too quickly, locking may not complete.
• If any of the doors are not fully closed, an electronic chirp sounds 5 seconds to alert you that the doors are not properly closed.
• It is possible to lock a closed door even if the other door is open. After performing the locking procedure, close the opened door to lock it.
• Within 3 seconds after locking the doors using the keyless access function, it is not possible to unlock doors using the keyless access function.
• When locking, be sure to carry the access key fob to prevent locking the access key fob in the vehicle.
• The setting of the hazard warning flasher operation and the volume of the audible signal can be changed by your SUBARU dealer. Contact your SUBARU dealer for details. The setting of the hazard warning flasher operation can be changed by operating the center information display. For details, refer to "Car settings" ☞P169.

▽ Locking with the door lock sensor

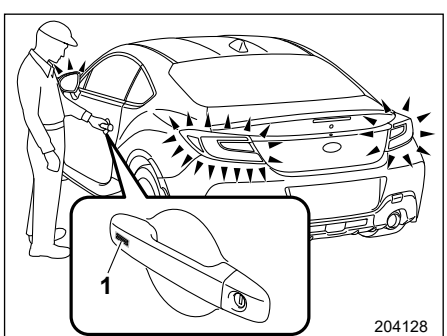

1) Door lock sensor

Carry the access key fob, close all doors and touch the door lock sensor on the door handle. All doors including the fuel filler lid will be locked. Also, an electronic chirp will sound once and the hazard warning flashers will flash once.

NOTE

After touching the door lock sensor to lock all of the doors, if you touch the door lock sensor twice more to attempt the lock operation without first unlocking the doors, nothing will happen, even if the door lock sensor is touched. In this case, perform the unlocking operation once first. You can then touch the door lock sensor to lock the doors.

▽ Unlocking

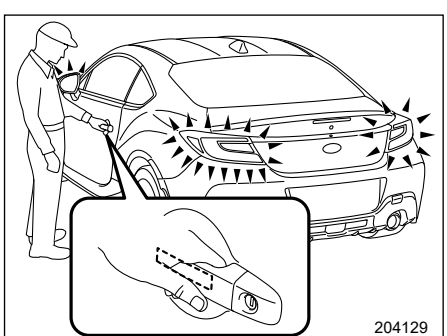

Carry the access key fob, and touch the sensor behind the door handle.

– CONTINUED –

• When the driver's door handle is gripped, only the driver's door and the fuel filler lid will be unlocked.

• When the passenger's door handle is gripped, all doors (including the trunk lid) and the fuel filler lid will be unlocked.

Also, an electronic chirp will sound twice and the hazard warning flashers will flash twice.

▽ **Opening trunk**

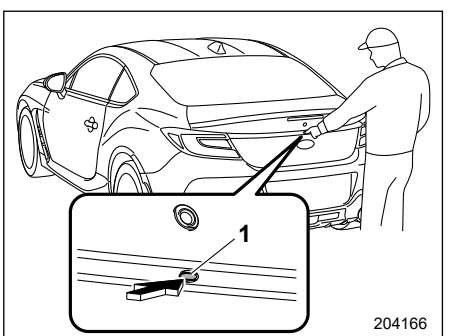

1) Trunk opener button

Carry the access key fob, and press the trunk opener button. The trunk will open.

NOTE

Under the following conditions, the trunk can be opened without the key fob.

- **The trunk lock/unlock setting is on.**
- **All doors are unlocked.**

The trunk lock/unlock setting can be changed by a SUBARU dealer. Contact your SUBARU dealer to change the setting.

▼ **Door unlock selection function**

When the door is unlocked using the keyless access function, only the doors that were set and the fuel filler lid can be unlocked.

The settings can be changed with the following methods.

• The setting can be changed by operating the center information display.

For details, refer to "Car settings" ☞P169.

• The setting can be changed by a SUBARU dealer.

■ Unlock Using PIN Code Access

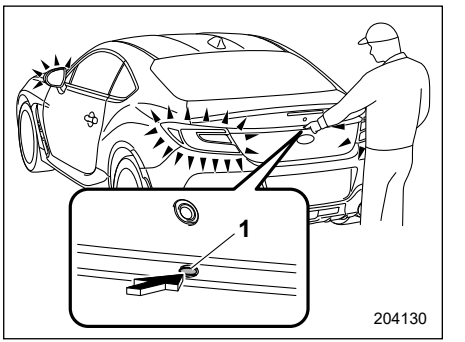

1) Trunk opener button

While all doors are locked, you can unlock the doors without a key by operating the trunk opener button.

NOTE

PIN Code Access will be helpful if the key is accidentally left in the vehicle. It is recommended that a 5-digit security code (PIN code) is registered.

▼ Registration for a PIN code

Steps		Operation	Time from the previous step
1		Turn off the ignition switch.	—
2		Close all doors (including trunk).	—
3		Press and hold the "🔒" button on the access key fob, then press and hold the trunk opener button until a chirp sounds intermittently.	—
4		Press the "🔓" button on the access key fob.	Within 30 seconds
5		Input the PIN code using the trunk opener button within 30 seconds after the chirp sound of step 4. For example, to register "32468" as the PIN code, perform the following procedure.	Within 30 seconds
	(1)	Press the button three times.	
	(2)	After a chirp sounds once, press the button twice.	
	(3)	After a chirp sounds once, press the button four times.	
	(4)	After a chirp sounds once, press the button six times.	
	(5)	After a chirp sounds once, press the button eight times.	
6		Perform step 5 again within approximately 30 seconds after the chirp starts sounding intermittently.	—
7		All doors will be unlocked and locked. Then the PIN code will be registered.	—

– CONTINUED –

NOTE

- **Press the trunk opener button ten times to enter "0".**
- **Change the PIN code frequently to protect your vehicle from theft.**
- **If you have lent your vehicle to another person, confirm that the PIN code has not been changed or deleted. If the PIN code has been changed or deleted, reregister a new PIN code.**
- **If you make an error during the registration procedure, press the "🔓" or "🚗" button on the access key fob. Then, start over from the procedure described in "Registration for a PIN code".**
- **To protect your vehicle from theft, you cannot register "00000" to "99999" or "12345" as a PIN code.**
- **Do not register your vehicle license plate number or simple numbers such as "11122" or "12121" as a PIN code. Doing so will increase the risk of vehicle theft.**
- **When you try to register "22222", the registered PIN code will be deleted. You cannot unlock the doors by PIN Code Access until a new code is registered.**
- **After registering a new PIN code, make sure that you can unlock the doors using the PIN code.**
- **The PIN code cannot be deleted while the keyless access function is disabled by operating the access key fob.**
- **Reregister the PIN code in the following case.**
  - **When you forget the PIN code**
  - **When you want to change the PIN code**

▼ Unlocking

Perform steps (1) to (5) of step 5 described in "Registration".

NOTE

- **You cannot unlock by PIN Code Access in the following cases.**
  - **When the access key fob is within the operating ranges**
  - **When the ignition switch is in the "ACC" or "ON" position**
- **If you make an operation error during the unlocking procedure, start over with the unlocking procedure after waiting for 5 seconds or longer.**
- **To protect your vehicle from theft, a buzzer will sound if incorrect PIN codes are entered five times continuously. If this occurs, you cannot unlock the doors by PIN Code Access for 5 minutes.**

■ Power Saving Function

To protect the access key fob battery and the vehicle battery, the keyless access function will be disabled as follows.

- When the keyless access function and the remote keyless entry system have not been used:

  (1) 5 days after the push-button ignition switch has been turned off, communication between the antennas and the access key fob will be stopped.
  (2) 9 days after step (1), the sensors (both lock sensor and unlock sensor) on the passenger's door will be disabled.
- When the access key fob has been left in the operating range for 10 minutes or longer while all doors are locked, the keyless access function will be disabled.

▼ Recovery from power saving mode

When one of the following operations is performed, the keyless access function will be recovered.

- Unlock by gripping the door handle (only when the sensors on the passenger's door are not disabled) or pressing the trunk opener button on the trunk lid
- Lock or unlock by the remote keyless entry system

- Open a door and then close it
- Turn the push-button ignition switch to the “ON” position

■ Power Saving Function of Access Key Fob

This function stops the access key fob from receiving signals and helps minimize the battery consumption of the access key fob.

1. Press the “” button twice while holding the “” button.

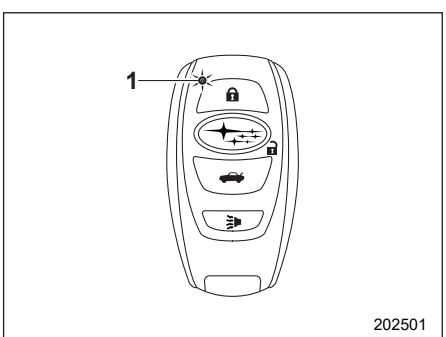

1) LED indicator

2. Confirm that the LED indicator blinks 4 times to notify that the setting is complete.

When the access key fob is in the power save mode, the keyless access function and push-button start system will not be available.

To cancel the power save mode, press one of the buttons on the access key fob.

■ Disabling Keyless Access Function

WARNING

If you have an implanted pacemaker or an implanted defibrillator, perform the procedure "By operating the driver’s door" ☞P106 to disable the keyless access function. If you perform the procedure "By operating the access key fob" ☞P105, the operation of an implanted pacemaker or implanted defibrillator may be affected by the radio waves from the transmitter antenna.

When the vehicle is not going to be used for a long time, or when you choose not to use the keyless access function, the keyless access function can be disabled.

NOTE

- **If the access key is kept in or comes near the vehicle, the system becomes active and both the vehicle and access key batteries’ energy will be consumed. If this occurs frequently or continuously, both the vehicle and access key batteries can become fully drained.**
- **The locking and unlocking function by the remote keyless entry system is not disabled.**
- **To start the engine while the functions are disabled, perform the procedure described in "Starting Engine" ☞P330.**
- **When the keyless access functions are disabled, the remote engine start system cannot be used via SUBARU STARLINK Safety and Security.**

▼ Disabling functions

▽ By operating the access key fob

To disable the keyless access function by operating the access key fob, register a PIN code for PIN Code Access. For details about registering a PIN code, refer to "Unlock Using PIN Code Access" ☞P102.

– CONTINUED –

1. Open the driver's door.

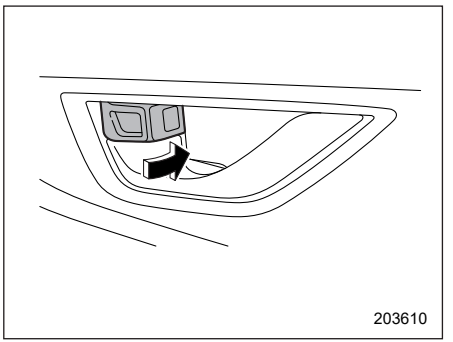

2. Rotate the lock lever forward.

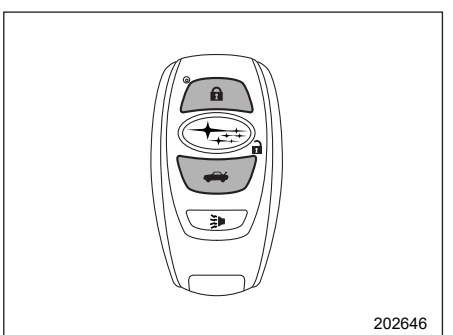

3. Press and hold the "🔒" button and "🚗" button on the access key fob simultaneously for more than 5 seconds.

A chirp sound will be heard, and the function will be disabled.

▽ **By operating the driver's door**

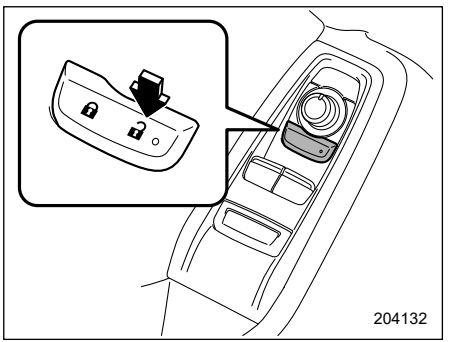

To disable the keyless access function by operating the driver's door, perform the following procedures.

Steps	Operation	Time	Status
1	Sit in the driver's seat, and close the door.	—	Close
2	Push "🔓" on the power door locking switch.	—	Close
3	Open the driver's door.	Within 5 sec.	Close→Open
4	Push "🔓" on the power door locking switch twice.	Within 5 sec.	Open
5	Close and open the driver's door twice.	Within 10 sec.	Open→Close→Open→Close→Open
6	Push "🔓" on the power door locking switch twice while the door is open.	Within 10 sec.	Open
7	Close and open the driver's door once.	Within 10 sec.	Open→Close→Open
8	Close the door.	Within 5 sec.	Open→Close

A chirp will sound and the functions will be disabled.

NOTE

In steps 4 and 6, press the power door locking switch firmly. If the switch is not pressed firmly, the functions may not be disabled.

▼ Enabling functions

When the procedure to disable the functions is performed again, a chirp sound will be heard, and the functions are enabled.

NOTE

• The keyless access function will be enabled only if you perform the procedure in the same manner you disabled the function (for example, when disabling by operating the driver's door, the function will not be enabled even if you operate the access key fob).

• Press the push-button ignition switch if you do not know the procedure in which the keyless access function was disabled.

- When disabling by operating the driver's door: a chirp will not be heard

- When disabling by operating the access key fob: a chirp will be heard

■ Selecting Audible Signal Operation (If Equipped)

Using an electronic chirp, the system will give you an audible signal when the doors are locked or unlocked. If desired, you can turn the audible signal off by operating the

– CONTINUED –

center information display. For details, refer to "Car settings" ☞P169.

Furthermore, the volume setting of the audible signal can also be changed by a SUBARU dealer. Consult your SUBARU dealer for details.

■ Selecting Hazard Warning Flasher Operation

Using the hazard warning flasher, the system will give you a visible signal when the doors are locked or unlocked. If desired, you can turn the hazard warning flashers off by operating the center information display. For details, refer to "Car settings" ☞P169. The setting can also be changed by a SUBARU dealer. Consult your SUBARU dealer for details.

■ Warning Chimes and Warning Indicator

The keyless access with push-button start system is equipped with a warning chime and the access key warning indicator in order to minimize improper operations and help protect your vehicle from theft.

For details, refer to "Warning Chimes and Warning Indicator of the Keyless Access with Push-Button Start System" ☞P147.

■ When Access Key Fob Does Not Operate Properly

Refer to "Access Key Fob – If Access Key Fob Does Not Operate Properly" ☞P329.

■ Replacing Battery of Access Key Fob

Refer to "Replacing Battery of Access Key Fob" ☞P385.

■ Replacing Access Key Fob

Access key fobs can be replaced at SUBARU dealers. For more details, contact a SUBARU dealer.

■ Certification for Keyless Access with Push-Button Start System

- **U.S.-spec. models**

FCC ID: HYQ14AKB

FCC ID: Y8PSU19S-3

FCC ID: Y8PSSPIMB03

⚠ CAUTION

FCC WARNING

Changes or modifications not expressly approved by the party responsible for compliance could void the user's authority to operate the equipment.

This device complies with part 15 of the FCC Rules. Operation is subject to the following two conditions: (1) This device may not cause harmful interference, and (2) this device must accept any interference received, including interference that may cause undesired operation.

- **Canada-spec. models**

NOTE

This device contains licence-exempt transmitter(s)/receiver(s) that comply with Innovation, Science and Economic Development Canada's licence-exempt RSS(s). Operation is subject to the following two conditions:
(1) This device may not cause interference.
(2) This device must accept any interference, including interference that may cause undesired operation of the device.

NOTE

L'émetteur/récepteur exempt de licence contenu dans le présent appareil est conforme aux CNR d'Innovation, Sciences et Développement économique Canada applicables aux appareils radio exempts de licence. L'exploitation est autorisée aux deux conditions suivantes:
(1) L'appareil ne doit pas produire de brouillage;
(2) L'appareil doit accepter tout brouillage radioélectrique subi, même si le brouillage est susceptible d'en compromettre le fonctionnement.

204232

This device complies with Industry Canada's licence-exempt RSSs. Operation is subject to the following two conditions:
(1)This device may not cause interference; and
(2)This device must accept any interference, including interference that may cause undesired operation of the device.

Le présent appareil est conforme aux CNR d'Industrie Canada applicables aux appareils radio exempts de licence. L'exploitation est autorisée aux deux conditions suivantes:
(1) l'appareil ne doit pas produire de brouillage;
(2) l'utilisateur de l'appareil doit accepter tout brouillage radioélectrique subi, même si le brouillage est susceptible d'en compromettre le fonctionnement.

204234

- **Mexico-spec. models**

Este equipo opera a título secundario, consecuentemente, debe aceptar interferencias perjudiciales incluyendo equipos de la misma clase y puede no causar interferencias a sistemas operando a título primario.

204233

IFT

RCPDE1421-4665

14AKB

DENSO

2-2. Immobilizer

The immobilizer system is designed to prevent an unauthorized person from starting the engine. Only keys registered with your vehicle's immobilizer system can be used to operate your vehicle. If engine start is attempted with an unregistered access key fob or key, the engine will not start. Even if the engine does start, it will stop after a few seconds. This system, however, is not a 100% anti-theft guarantee.

⚠ CAUTION

- **Do not place the key under direct sunlight or anywhere it may become hot.**
- **Do not get the key wet. If the key gets wet, wipe it dry with a cloth immediately.**
- **Do not modify or remove the system. If modified or removed, the proper operation of the system cannot be guaranteed.**

NOTE

• To protect your vehicle from theft, please pay close attention to the following security precautions:

- Never leave your vehicle unattended with its keys inside.

- Before leaving your vehicle, close all windows and lock the doors.

- Do not leave spare keys or any record of your key number in the vehicle.

• The vehicle has a maintenance-free type immobilizer system.

■ Security Indicator Light

Refer to "Security Indicator Light" ☞P152.

■ Key Replacement

Your key number plate will be required if you ever need a replacement key made. Any new key must be registered for use with your vehicle's immobilizer system before it can be used. The maximum number of keys that can be registered for use with one vehicle is seven.

One key that has already been registered is required in order to register a new key.

NOTE

If you lose a key, the lost key's ID code still remains in the memory of the vehicle's immobilizer system. For security reasons, the lost key's ID code should be erased from the memory. To erase the lost key's ID code, all keys that will be used are required.

For details about new key registration and erasing the lost key's ID code, contact your SUBARU dealer.

■ Certification for Immobilizer System

Refer to "Certification for Keyless Access with Push-Button Start System" ☞P108.

2-3. Remote Keyless Entry System

CAUTION

- **Do not expose the remote transmitter to severe shocks, such as those experienced as a result of dropping or throwing.**
- **Do not take the remote transmitter apart except when replacing the battery.**
- **Do not get the remote transmitter wet. If it gets wet, wipe it dry with a cloth immediately.**
- **When you carry the remote transmitter on an airplane, do not press the button of the remote transmitter while in the airplane. When any button of the remote transmitter is pressed, radio waves are sent and may affect the operation of the airplane. When you carry the remote transmitter in a bag on an airplane, take measures to prevent the buttons of the remote transmitter from being pressed.**

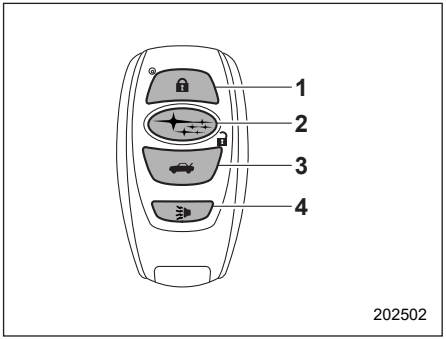

Access key fob
1) Lock/arm button
2) Unlock/disarm button
3) Trunk lid opener button
4) PANIC button

The remote keyless entry system has the following functions.

- Locking and unlocking the doors and fuel filler lid
- Opening the trunk lid
- Sounding a panic alarm
- Arming and disarming the alarm system. For details, refer to "Alarm System" ☞P117.

The operable distance of the remote keyless entry system is approximately 30 feet (10 meters). However, this distance will vary depending on environmental conditions. The system's operable distance will be shorter in areas near a facility or electronic equipment emitting strong radio waves such as a power plant, broadcast station, TV tower, or remote controller of home electronic appliances.

NOTE

- **The remote keyless entry system will not be activated when the push-button ignition switch is in any position other than the "OFF" position.**
- **The hazard warning flashers will flash once or twice when the access key fob button is pressed in the following cases.**
  - **When locking the doors**
  - **When unlocking the doors**

If desired, you can turn the hazard warning flashers off by operating the center information display. For details, refer to "Car settings" ☞P169. The setting can also be changed by a SUBARU dealer. Consult your SUBARU dealer for details.

The setting of the Remote Keyless Entry System operation can be changed by your SUBARU dealer. Consult your SUBARU dealer for details. For details, refer to "Function Settings and Adjustments Performed by a Dealer" ☞P399.

– CONTINUED –

■ Locking the Doors

Press the “” button to lock all doors and fuel filler lid. An electronic chirp will sound once and the hazard warning flashers will flash once.

If any of the doors are not fully closed, an electronic chirp sounds 5 seconds to alert you that the doors are not properly closed.

When you close the door, it will automatically lock and then the following will occur.

- An electronic chirp sounds once.
- The hazard warning flashers flash once.

■ Unlocking the Doors

Press the “” button to unlock the driver’s door and the fuel filler lid. An electronic chirp will sound twice and the hazard warning flashers will flash twice. To unlock all doors, briefly press the “” button again within 3 seconds.

NOTE

If the interval between the first and second presses of the “” button (for unlocking of all of the doors) is extremely short, the system may not respond.

■ Opening the Trunk Lid

Press and hold the “” button to open the trunk lid. An electronic chirp will sound once.

This operation setting can be changed by a SUBARU dealer. Consult your SUBARU dealer for details.

■ Setting Audible Signal Operation (If Equipped)

Using an electronic chirp, the system will give you an audible signal when the doors lock and unlock.

If desired, you can turn the audible signal off by operating the center information display. For details, refer to "Car settings" ☞P169. Furthermore, the volume setting of the audible signal can also be changed by a SUBARU dealer. Consult your SUBARU dealer for details.

■ Selecting Hazard Warning Flasher Operation

Using the hazard warning flasher, the system will give you a visible signal when the doors are locked or unlocked. If desired, you can turn the hazard warning flashers off by operating the center information display. For details, refer to "Car settings" ☞P169. The setting can also be changed by a SUBARU dealer. Consult your SUBARU dealer for details.

■ Vehicle Finder Function

Use this function to find your vehicle parked among many vehicles in a large parking lot. Provided you are within 30 feet (10 meters) of the vehicle, pressing the “” button three times in a 5-second period will cause your vehicle’s horn to sound once and its hazard warning flashers to flash three times.

NOTE

If the interval between presses is too short when you press the “” button three times, the system may not respond to the signals from the remote transmitter.

■ Sounding a Panic Alarm

To activate the alarm, press the “PANIC” button once.

The horn will sound and the hazard warning flashers, headlights, side marker lights, tail lights and map lights will flash.

To deactivate the panic alarm, press any button on the remote transmitter. If a button on the remote transmitter is not pressed, the alarm will be deactivated after approximately 60 seconds.

■ Replacing the Battery

Refer to "Replacing Battery" ☞P384.

■ Replacing Lost Transmitters

If you lose a transmitter or want to purchase additional transmitters (up to seven can be programmed), you should re-program all of your transmitters for security reasons. For details, contact your SUBARU dealer and have the transmitters programmed into the remote keyless entry system.

2-4. Door Locks

■ Locking and Unlocking from the Outside

NOTE

If you unlock the driver's door with an emergency key and open the door while the alarm system is armed, the alarm system is triggered and the vehicle's horn sounds. In this case, perform any of the following operations:

- **Press unlock button on the access key fob.**
- **Turn the push-button ignition switch to the "ACC" position.**
- **Carry the access key fob and perform either of the following procedures.**
  - **Grip the door handle.**
  - **Press the trunk opener button.**

For details about the alarm system, refer to "Alarm System" ☞P117.

▼ How to lock and unlock the vehicle using the emergency key

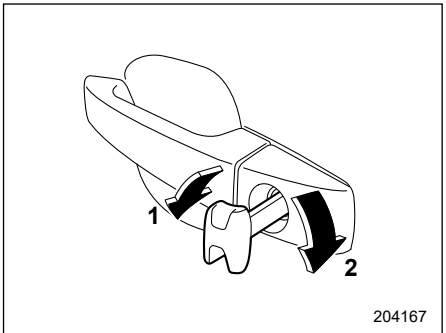

1) Rotate the key toward the front to lock.
2) Rotate the key toward the rear to unlock.

In this case, only the driver's side door is locked or unlocked.

NOTE

The emergency key is directional. If the key cannot be inserted, change the direction that the grooved side is facing and insert it again.

▼ How to lock the vehicle without using the key

To lock the door from outside without the key, the following methods are available.

– CONTINUED –

▽ **Locking using lock lever**

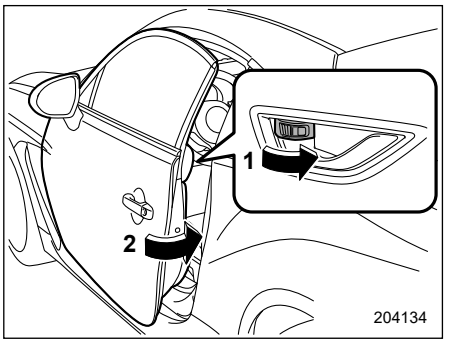

1) Rotate the lock lever forward.
2) Close the door.

In this way, only the door that was operated will be locked.

▽ **Locking using power door locking switch**

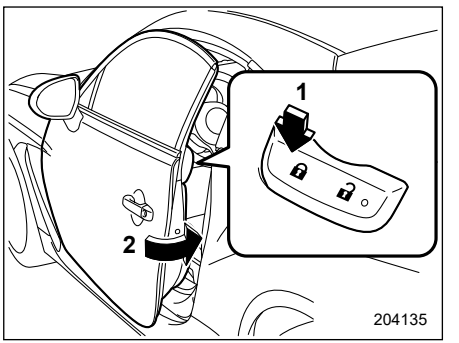

1) Press the 🔒 side of the power door locking switch*.
2) Close the door.

*: For details about the power door locking switch, refer to "How to operate the power door locking switches" ☞P115.

In this case, all closed doors, the fuel filler lid are locked at the same time.

NOTE

Make sure that you do not leave the key inside the vehicle before locking the doors from the outside without the key.

■ Locking and Unlocking from the Inside

▼ **How to use the lock lever**

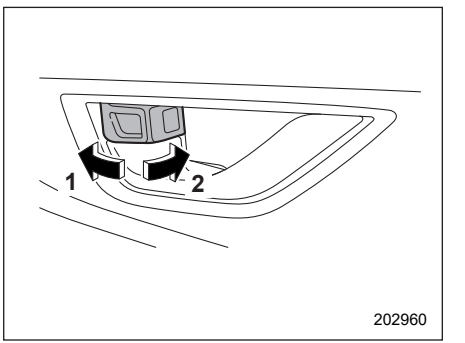

1) Rotate the lock lever rearward to unlock.
2) Rotate the lock lever forward to lock.

To lock the door from the inside, rotate the lock lever forward. To unlock the door from the inside, rotate the lock lever rearward.

The red mark on the lock lever appears when the door is unlocked.

Pull the inside door handle to open an unlocked door.

Always make sure that all doors and the trunk lid are closed before starting to drive.

⚠ WARNING

Keep all doors locked when you drive, especially when small children are in your vehicle.

Along with the proper use of seatbelts, locking the doors reduces the chance of being thrown out of the vehicle in an accident.

It also helps prevent passengers from falling out by preventing a door from being accidentally opened, and intruders from unexpectedly opening doors and entering your vehicle.

▼ How to operate the power door locking switches

All doors and the fuel filler lid can be locked and unlocked by pressing either side of the power door locking switches located on the driver's side and the passenger's side doors.

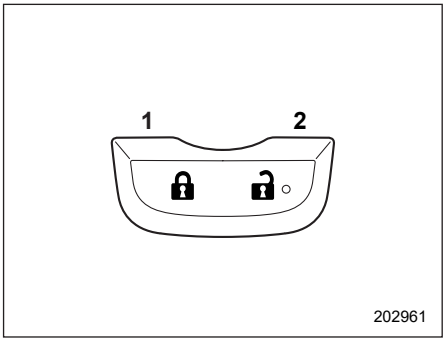

1) Lock
2) Unlock

NOTE

Make sure that you do not leave the key inside the vehicle before locking the doors from the outside using the power door locking switches.

■ Key Lock-In Prevention Function

All the doors will not lock when the power door locking switch is pushed with the door open while the ignition switch is in the "ACC" or "ON" position.

NOTE

- **When leaving the vehicle, make sure you are holding the key before locking the doors.**
- **The factory setting (default setting) for this function is set as "operational". This function's operational/non-operational setting can be changed by a SUBARU dealer. Contact a SUBARU dealer for details.**

▼ Non-operation of key lock-in prevention function

When the system is set so that it does not operate, the doors are locked by the following operation.

- If the lock lever is turned to the front ("LOCK") position with the driver's door open and the driver's door is then closed with the lock lever in that position, the driver's door is locked.
- If the spare key is used to lock the driver's door from the outside of the vehicle, the door is locked.

■ Battery Drainage Reduction Function

Under various conditions, lights inside the vehicle will automatically turn off to reduce the risk of discharging the battery.

– CONTINUED –

▼ **Battery drainage reduction function for various conditions**

This function will enter standby mode when the ignition switch is turned to the “OFF” position.

If the following actions are not performed within 20 minutes, while the function is in standby mode, any room lights that are on will automatically turn off.

Turning off lights	– Map light – Door step light – Trunk light – Vanity mirror light
Actions	– Turn the ignition switch to the “ACC” or “ON” position. – Open or close the doors, including the trunk lid. – Push the unlock button on the access key fob or transmitter. – Hold the front door handle and unlock it while holding the access key fob. – Come close to the vehicle that the front door was locked while holding the access key fob (if OFF delay timer setting for period of time is not off). – Push the panic button on the access key fob or transmitter.

Perform the action in the above table to illuminate the lights again when the battery drainage reduction function is active.

NOTE

- **The battery drainage reduction function cannot be turned off.**
- **If the battery drainage reduction function is in operation when a door is open, the target room light will not be illuminated.**
- **To protect the battery from battery drainage, make sure that all doors, including the trunk, are completely closed when leaving the vehicle.**

2-5. Alarm System

The alarm system helps to protect your vehicle and valuables from theft. The horn sounds and the hazard warning flashers flash if someone attempts to break into your vehicle.

The system can be armed or disarmed with the keyless access function or access key fob.

The system will not be activated when the push-button ignition switch is in the “ACC” or “ON” position.

Your vehicle’s alarm system has been set for deactivation at the time of shipment from the factory. You can set the system for activation yourself or have it done by your SUBARU dealer. Refer to "Alarm System Setting" ☞P118.

■ Alarm System Operation

When the alarm system is armed, it is triggered by the opening any of the doors, the trunk lid or engine hood.

The alarm system will activate the following alarms when triggered.

- The vehicle’s horn will sound for 60 seconds.
- The hazard warning flashers, headlights, side marker lights, tail lights and map lights will flash for 60 seconds.

NOTE

The alarm system can be set to trigger the illumination of the map lights (illuminates only when the door interlock switch is in the “DOOR” position).

■ Arming the System

The alarm system becomes armed when the following operation is performed.

1. Close all windows and turn the ignition switch to the “OFF” position.
2. Carry the key and get out of the vehicle.
3. Make sure that the engine hood is locked.
4. Lock the doors using any of the following methods.
   - Locking using the remote keyless entry system. For details, refer to "Remote Keyless Entry System" ☞P111.
   - Locking using the keyless access function. For details, refer to "Locking with the door lock sensor" ☞P101.
   - Locking using the power door locking switch. For details, refer to "Locking using power door locking switch" ☞P114.

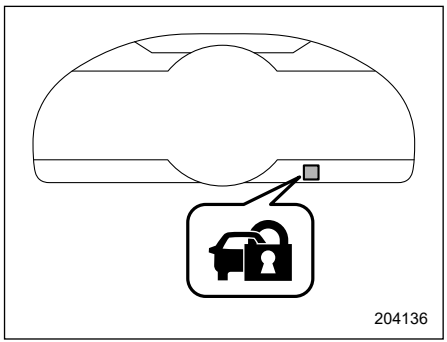

Security indicator light

NOTE

- **All doors, the trunk lid and fuel filler lid will lock, an electronic chirp will sound once, the hazard warning flashers will flash once, and the security indicator light will turn on.**
- **If any of the doors are not fully closed, an electronic chirp sounds 5 seconds to alert you that the doors are not properly closed. When you close the door, doors will automatically lock and the system will automatically arm in 30 seconds.**

5. Approximately 30 seconds later, the system will enter surveillance state.

When the system is in surveillance state, the security indicator light will then flash slowly (once approximately every 3

– CONTINUED –

seconds), indicating that the system has been armed for surveillance.

NOTE

• The system can be armed even if the windows are open. Always make sure that they are fully closed before arming the system.

• If any of the following actions is done during the standby period, the system will not switch to the surveillance state.

- Doors (including the trunk lid) are unlocked.

- Any door (including the engine hood) is opened.

- Push-button ignition switch is turned to the "ACC" position

■ Disarming the System

Perform either of the following procedures.

• Briefly press unlock button (for less than 2 seconds) on the access key fob.

• Carry the access key fob and perform either of the following procedures.

- Grip the door handle.
- Press the trunk opener button
- Unlock using the PIN code access.

The flashing of the security indicator light will blinks slowly (once approximately every 3 seconds), indicating that the alarm system has been disarmed.

▼ Emergency disarming

If you cannot disarm the system using the access key fob, you can disarm the system without using the access key fob.

The system can be disarmed if you turn the ignition switch from the "OFF" position to the "ON" position.

NOTE

If the access key fob battery is discharged, perform the procedure described in "Switching Power Status" ☞P330. In such a case, replace the battery immediately. Refer to "Replacing Battery of Access Key Fob" ☞P385.

■ Alarm System Setting

To change the setting of your vehicle's alarm system for activation or deactivation, do the following.

1. Disarm the alarm system. Refer to "Disarming the System" ☞P118.
2. Sit in the driver's seat and shut all doors.
3. Turn the ignition switch to the "ON" position.
4. Hold down "🔒" of the driver's power door locking switch, open the driver's door within the following 1 second, and wait 10 seconds without releasing the switch. The setting will then be changed as follows.

Setting status	Combination meter display (color TFT)	Horn
Activate	AL ON	Once
Deactivate	AL OFF	Twice

NOTE

You may have the above setting change done by your SUBARU dealer.

■ If You Have Accidentally Triggered the Alarm System

▼ To stop the alarm

Do any of the following operations:

• Press unlock button on the access key fob.

• Turn the push-button ignition switch to the "ACC" position.

NOTE

Only registered keys will stop the alarm. If the immobilizer transponder is not registered, the alarm will not stop.

2-6. Windows

⚠ WARNING

To avoid serious personal injury caused by entrapment, always conform to the following instructions without exception.

- **When operating the power windows, be extremely careful to prevent anyone's fingers, arms, neck, head or other objects from being caught in the window.**
- **Always lock the passengers' windows using the lock switch when children are riding in the vehicle.**
- **Always carry the key when you leave the vehicle for safety reasons and never allow an unattended child to remain in the vehicle. Failure to follow this procedure could result in injury to a child operating the power window.**

NOTE

• In order to make opening and closing the doors easier, completely closed windows are linked to door operations. Therefore, when a door is opened, its window opens slightly. When a door is closed, its window closes completely. However, if the battery has discharged or is disconnected, this function will not operate.

• If the power window system detects resistance, an impact or abnormality, the window operation may be automatically stopped to prevent further jamming, entrapment or malfunction.
- The closing window slides down slightly and stops.
- The opening window stops sliding down.

• The power window system may detect resistance, an impact or an abnormality in the following cases.
- A substantial sized object is caught between the window and the roof side (between the front pillar and a point over the rear seat).
- A foreign object is caught between the window and the roof side (between the front pillar and a point over the rear seat).
- The vehicle drives over a deep pothole.

• The window cannot be closed for a few seconds after the window is automatically stopped by the system.

■ Power Window Operation

▼ Power window switches

- Driver's side power window switches:

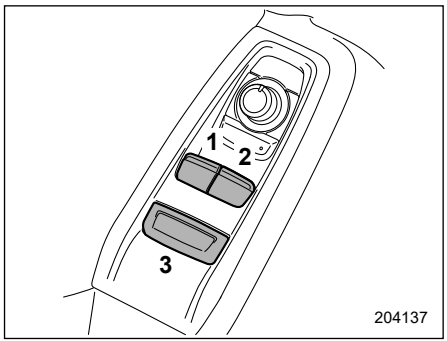

1) For left window
2) For right window
3) Lock switch

All door windows can be controlled by the power window switch cluster on the driver side door.

– CONTINUED –

• Passenger's side power window switches:

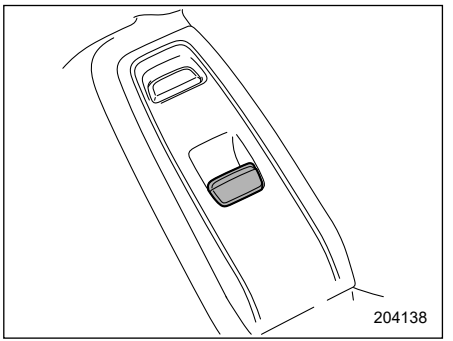

Passenger's window can be controlled by the power window switch located on the door.

▼ Operating the window

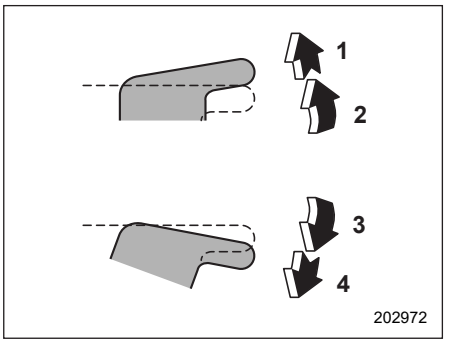

With one-touch auto up and down feature

1) Automatically close*
2) Close
3) Open
4) Automatically open*

*: To stop the window halfway, operate the switch to the opposite side.

NOTE

Avoid the following.

• Continuously operating a switch in the same direction after the window is fully closed or fully opened.

• After the windows are fully opened or closed, if both switches of the power window switch on the driver's side are operated continuously, a fuse may blow and the windows will not be able to be opened or closed. If the windows cannot be opened or closed, check the fuses and replace them as necessary. Refer to "Fuses" ☞P380.

Also, after replacing a fuse, make sure to initialize the power windows. Refer to "Initialization of Power Window" ☞P121.

▼ Anti-entrapment function

While closing the window automatically, if the window senses a substantial enough object trapped between the window and the roof side (between the front pillar and a point over the rear seat), it automatically moves down slightly and stops.

If a foreign object is caught while window is opening automatically, the window will stop.

⚠ CAUTION

- **Never attempt to test the power window operation using body parts fingers, hands or other parts of your body.**
- **If an object is caught just before the window fully closes, the system may not operate properly.**

NOTE

• Certain environments or driving conditions may cause the anti-entrapment function to activate. If the window does not close, refer to "If the Power Window Does Not Close" ☞P332.

• You cannot close the window for a few seconds after the anti-entrapment function operates.

▼ Off delay function

The windows can be operated for approximately 40 seconds even after the ignition switch is turned to the “ACC” or “OFF” position. If a door is opened within 40 seconds, the off delay function is canceled.

▼ Locking the passenger’s window

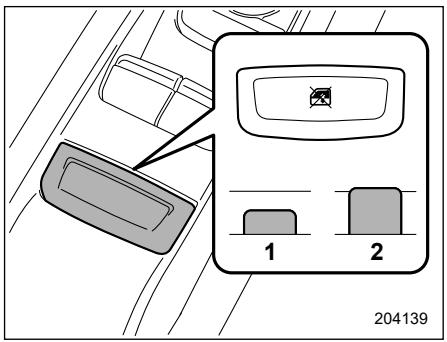

1) Lock
2) Unlock

When the lock switch is in the lock position, the passenger’s window cannot be opened or closed.

■ Initialization of Power Window

If the one-touch auto up and down function or off delay function does not operate properly, operate each window according to the following procedure in order to initialize the power window system.

1. Close the door.
2. Turn the ignition switch to the “ON” position.
3. Open the window completely and then press and hold down the power window switch for approximately 1 second.
4. Close the window completely and then pull and hold the power window switch for approximately 1 second.

2-7. Trunk Lid

⚠ WARNING

- To prevent dangerous exhaust gas from entering the vehicle, always keep the trunk lid closed while the engine is running.
- Check that the trunk is completely closed before driving. If it is not, it may suddenly open, which could lead to an accident.
- Help prevent children, adults or animals from locking themselves in the trunk. On hot or sunny days, the temperature in the trunk could quickly become high enough to cause death or serious heat-related injuries including brain damage to anyone locked inside, particularly for small children.
- When leaving the vehicle, close all windows and lock all doors. Also make certain that the trunk is closed.

⚠ CAUTION

- Be extremely careful not to catch fingers or other objects when closing the trunk lid.
- Before opening and closing the trunk, carefully check your surroundings to make sure it will not strike any people or objects.
- When loading and unloading cargo, be careful not to come in contact with the hot engine exhaust gas or the exhaust pipe, because they could burn you.
- Be careful opening the trunk when the wind is strong. The trunk lid could close or open suddenly, possibly causing injuries.
- Make sure that the trunk is completely open when using it. If it is not, the trunk lid may suddenly drop and cause serious injury.
- Remove snow and ice from the trunk lid before opening it. Not doing so could cause the trunk lid to fall after it is opened.
- Under the following conditions, the trunk lid may close unexpectedly, striking people or objects in its path:
  - Parking on a slope, with the rear of the vehicle lower than its front. In this case, make sure the trunk lid is fully open and secure before loading or unloading cargo.
  - Installing parts or accessories that place excess weight on the trunk lid. Install only genuine SUBARU parts and accessories.
  - Loading baggage or other heavy items by throwing or otherwise forcefully loading them into the trunk. Always load cargo with care.
- Do not push the trunk lid forcibly to close it. It could deform the metal.
- The trunk lid is equipped with damper stays that hold the trunk lid in place. Observe the following precautions.
  Failure to do so may cause damage to trunk lid damper stays, resulting in a malfunction.
  - Do not attach any foreign objects such as stickers, plastic sheets and adhesives to damper stay rods.

- **Do not touch damper stay rods with gloves or other fabric items.**
- **Do not attach any accessories other than genuine parts to the trunk lid.**
- **Do not apply lateral force to damper stays or place your hand on it.**

- **Do not pull on or disassemble the trunk lid damper stays, or dispose of them in a fire. Illustrations on the trunk lid damper stays indicate the following:**
  - **: Do not pull**
  - **: Do not disassemble**
  - **: Do not dispose of in fire**

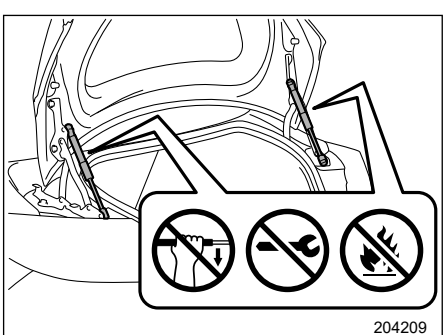
204209

NOTE

Avoid keeping the trunk lid open for more than a few hours. Doing so may drain the vehicle battery.

■ To Open and Close the Trunk Lid from Outside

The trunk lid can be opened using the keyless access function or remote keyless entry system. For details, refer to the following section.

Refer to "Opening trunk" ☞P102.

To close the trunk lid, lightly press the trunk lid down until the latch engages.

NOTE

- **Do not leave your valuables in the trunk when you leave your vehicle.**
- **Under the following conditions, the trunk can be opened without the access key fob.**
  - **The trunk lock/unlock setting is set to on.**
  - **All doors are unlocked.**

The trunk lock/unlock setting can be changed by a SUBARU dealer. Contact your SUBARU dealer to change the setting.

■ To Open the Trunk Lid from Inside

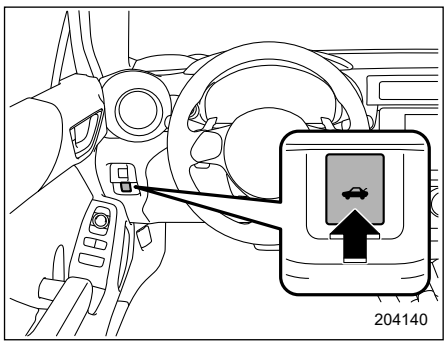
204140

Press and hold the trunk lid opener button for more than 1 second.

■ Internal Trunk Lid Release Handle

The internal trunk lid release handle is a device designed to open the trunk lid from inside the trunk. In the event children or adults become locked inside the trunk, the handle allows them to open the lid. The handle is located on the inside of the trunk lid.

– CONTINUED –

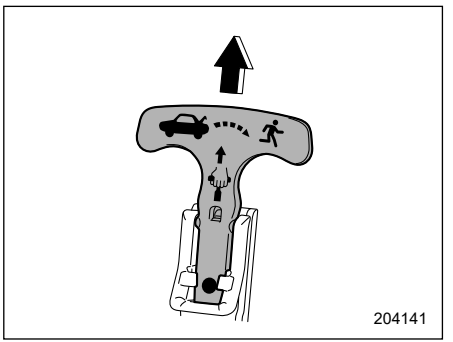

To open the trunk lid from inside the trunk, pull the yellow handle as indicated by the arrow on the handle. This operation unlocks the trunk lid. Then, push up the lid.

The handle is made of material that remains luminescent for approximately an hour in the dark trunk space after it is exposed to ambient light even for a short time.

⚠ WARNING

Never allow any child to get in the trunk and play with the release handle. If the driver starts the vehicle without knowing that a child is inside the trunk and the child opens the lid using the release handle, the child could fall out and be killed or seriously injured.

⚠ CAUTION

- **Do not close the lid while gripping the release handle. The handle may be damaged.**
- **Do not use the handle as a hook to fasten straps or ropes to secure your cargo in the trunk. Such use may result in damage of the handle.**
- **Load the trunk so that cargo cannot strike the release handle. If the cargo hits the handle while the vehicle is being driven, the handle may be pulled and the trunk lid may open. That may cause cargo to fall out of the trunk, which could create a traffic safety hazard.**

▼ Inspection

Perform the following steps at least twice a year to check the release handle for correct operation.

1. Open the trunk lid.

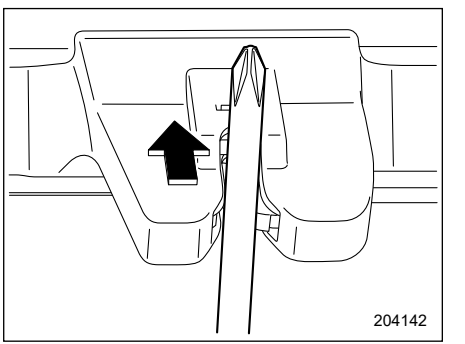

2. To lock it, press the latch with the screwdriver shaft until it clicks.

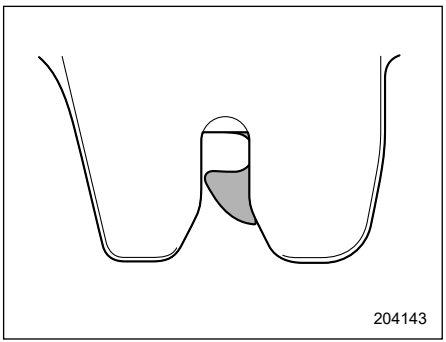

This places the latch in the locked position.

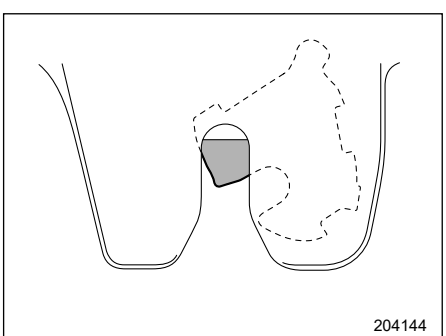

3. Move the release handle, from outside the vehicle, in the direction of the arrow to check if the latch is released.

If the latch is not released, contact your SUBARU dealer.

In that case, use the key to release the latch, then close the trunk lid.

Also, if the movement of the release handle feels restricted or not entirely smooth during operation, or the handle and/or handle base is cracked, contact your SUBARU dealer.

3-1. Push-Button Ignition Switch 129
Safety Precautions 129
Operating Range for Push-Button Start System 129
Switching Power Status 129
When Access Key Fob Does Not Operate Properly 130
3-2. Hazard Warning Flasher 131
3-3. Meters and Gauges 131
Speedometer 131
Tachometer 131
Odometer and Double Trip Meter 132
Fuel Gauge 133
Engine Coolant Temperature Gauge 133
Outside Temperature 133
Combination Meter Settings 134
3-4. REV indicator light and buzzer 134
3-5. Illumination Brightness Control 134
Auto Dimmer Cancel Function 135
3-6. Warning and Indicator Lights 135
Seatbelt Warning Light and Chime 135
SRS Airbag System Warning Light 139
Front Passenger's Frontal Airbag ON and OFF indicator lights 139
CHECK ENGINE Warning Light/Malfunction Indicator Light 140
Coolant Temperature Low Indicator Light/Coolant Temperature High Warning Light 140
Charge Warning Light 141
Oil Pressure Warning Light 141
AT OIL TEMP Warning Light (AT Models) 142
Low Tire Pressure Warning Light (If Equipped) 142
ABS Warning Light 144
Brake System Warning Light 144
Low Fuel Warning Light 145
Door Open Indicator 145
Power Steering Warning Light 145
TRAC OFF Indicator Light 146
Vehicle Stability Control (VSC) Warning Light/ Vehicle Stability Control (VSC) Operation Indicator Light 146
Vehicle Stability Control (VSC) OFF Indicator Light 147
Warning Chimes and Warning Indicator of the Keyless Access with Push-Button Start System 147
Security Indicator Light 152
Drive Mode Indicator Light 152
Select Lever (AT Models Only)/Gear Position Indicator 153
Turn Signal Indicator Lights 153
High Beam Indicator Light 153
High Beam Assist Indicator 153
Automatic Headlight Beam Leveler Warning Light 153
LED Headlight Warning Light 153
Steering Responsive Headlight OFF Indicator Light (If Equipped) 154
Steering Responsive Headlight Warning Light (If Equipped) 154
Headlight Indicator Light 154
Hill Start Assist Indicator Light 154
BSD/RCTA Warning Indicator (If Equipped) 154
BSD/RCTA OFF Indicator (If Equipped) 154
Icy Road Surface Warning Indicator 154
RAB/Sonar Audible Alarm Warning Indicator (If Equipped) 155
RAB OFF Indicator (If Equipped) 155

Sonar Audible Alarm OFF Indicator (If Equipped) 155
Master Warning Light 155
3-7. Combination Meter Display (Color TFT) 155
Basic Operation....156
Meter Information Screen....156
Drive Information 157
Exclusive Content for SUBARU BRZ 158
Navigation System-Linked Display 160
Audio System-Linked Display....160
Driving Support System Settings Display 161
Settings Display 161
Warning Message Display....163
Telltale Screen....163
3-8. Center Information Display (CID)....164
Features 164
Touch Screen Operations 164
Main Screen....165
3-9. Clock 176
Setting the Clock Manually 176
Setting the Clock Automatically 177
3-10.Location Services (If Equipped) 178
3-11.Light Control Switch 178
Headlights....178
High/Low Beam Change (Dimmer) 180
Headlight Flasher 181
High Beam Assist Function....181
Daytime Running Light System 184
3-12.Steering Responsive Headlight (SRH) (If Equipped) 184
3-13.Headlight Beam Leveler 186
3-14.Turn Signal Lever.... 186
One-Touch Lane Changer 186
3-15.Wiper and Washer.... 187
Windshield Wiper and Washer Switches 188
3-16.Defogger 189
3-17.Mirrors.... 190
Inside Mirror....190
Auto-Dimming Mirror/Compass with HomeLink® (Dealer Option) 190
Outside Mirrors....198
3-18.Tilt/Telescopic Steering Wheel 199
3-19.Horn.... 199

3-1. Push-Button Ignition Switch

■ Safety Precautions

Refer to "Safety Precautions" ☞P96.

■ Operating Range for Push-Button Start System

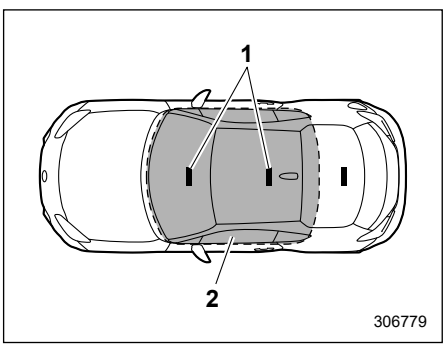

1) Antenna
2) Operating range

NOTE

• If the access key fob is not detected within the operating range of the antennas inside the vehicle, the push-button ignition switch and the engine start cannot be operated.

• Even when the access key fob is outside the vehicle, if it is placed too close to the glass, it may be possible to switch the power or to start the engine.

• Do not leave the access key fob in the following places. It may become impossible to operate the push-button ignition switch and the engine start.

- **On the instrument panel**
- **On the floor**
- **Inside the glove box**
- **Inside the door trim pocket**
- **On the rear seat**
- **On the rear shelf**

• When operating the push-button ignition switch or starting the engine, if the access key fob battery is discharged, perform the procedure described in "Access Key Fob – If Access Key Fob Does Not Operate Properly" ☞P329. In such a case, replace the battery immediately. Refer to "Replacing Battery of Access Key Fob" ☞P385.

■ Switching Power Status

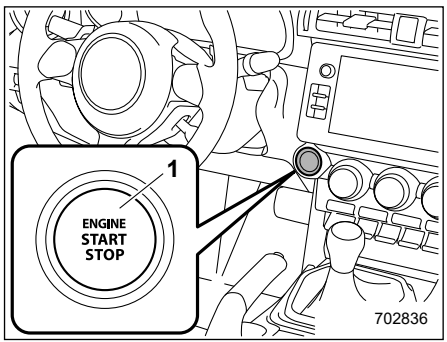

1) Push-button ignition switch

The power status is switched every time the push-button ignition switch is pressed.

1. Carry the access key fob, and sit in the driver's seat.
2. Shift the shift lever in neutral (MT models) or the select lever in the "P" position (AT models).
3. Press the push-button ignition switch without depressing the clutch pedal (MT models) or the brake pedal (AT models). Every time the button is pressed, the power is switched in the sequence of "OFF", "ACC", "ON" and "OFF".

– CONTINUED –

Power status	Combination meter display	Operation
OFF	—	Power is turned off.
ACC	“ACCESSORY”	The following systems can be used: audio and accessory power outlet.
ON	“IGNITION ON”	All electrical systems can be used.

⚠ CAUTION

- **To prevent the vehicle battery from discharging, do not leave the push-button ignition switch in the “ON” or “ACC” position for a long time.**
- **If the vehicle was left in the hot sun for a long time, the surface of the push-button ignition switch may get hot. Be careful not to burn yourself.**
- **To avoid a malfunction, observe the following precautions.**
  - **Do not spill drinks or other liquids on the push-button ignition switch.**
  - **Do not touch the push-button ignition switch with a hand that is soiled with oil or other contaminants.**
- **If the push-button ignition switch does not operate smoothly, stop the operation. Contact a SUBARU dealer immediately.**
- **If the vehicle was left in the hot sun for a long time, the surface of the push-button ignition switch may get hot. Be careful not to burn yourself.**

NOTE

• When operating the push-button ignition switch, firmly press it all the way.
• If the push-button ignition switch is pressed quickly, the power may not turn on or off.
• When the steering lock cannot be released, the message appears on the combination meter. When this occurs, press the push-button ignition switch while turning the steering wheel left and right.

▼ Battery drainage reduction function

When the push-button ignition switch is left in the “ACC” position for approximately 20 minutes or the “ON” position (the engine is not running) for approximately 30 minutes, the push-button ignition switch will be automatically switched to “OFF” to reduce the possibility of the battery going dead. (in AT models, this function is activated when the select lever is in the “P” position.)

■ When Access Key Fob Does Not Operate Properly

Refer to "Access Key Fob – If Access Key Fob Does Not Operate Properly" ☞P329.

3-2. Hazard Warning Flasher

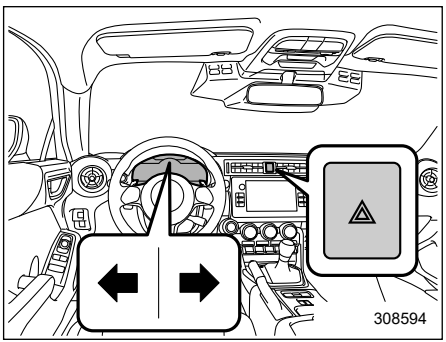

The hazard warning flasher is used to warn other drivers when you have to park your vehicle under emergency conditions. The hazard warning flasher works with the ignition switch in any position.

To turn on the hazard warning flasher, press the hazard warning button on the instrument panel. All the turn signal lights and the turn signal indicator lights will flash. To turn off the flasher, press the button again.

NOTE

When the hazard warning flasher is on, the turn signals do not work.

3-3. Meters and Gauges

NOTE

Liquid crystal displays are used in some of the meters and gauges in the combination meter. You will find their indications hard to see if you wear polarized glasses.

■ Speedometer

The speedometer shows the vehicle speed.

■ Tachometer

The tachometer shows the engine speed in thousands of revolutions per minute.

⚠ CAUTION

- **Do not operate the engine with the pointer of the tachometer in the red zone. In this range, fuel injection will be cut by the engine control module to protect the engine from overrevving. The engine will resume running normally after the engine speed is reduced below the red zone.**
- **Pay extra attention to the engine speed when the engine is cold, as the red zone will be lower than normal.**

NOTE

The initial movement of the bar display that occurs when the ignition switch is turned to the "ON" position can be activated or deactivated.

For details, refer to "General settings" ☞P165.

– CONTINUED –

■ Odometer and Double Trip Meter

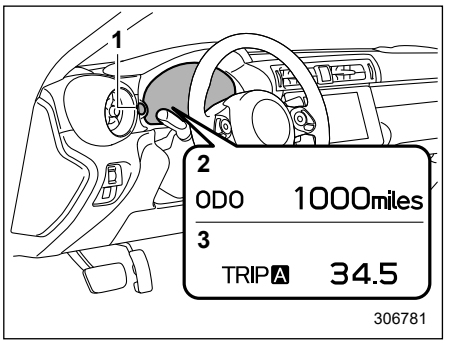

1) TRIP RESET switch
2) Odometer
3) Trip meter

This meter displays the odometer/trip meter when the ignition switch is in the "ON" position.

The display can be switched as shown in the following sequence by pressing the TRIP RESET switch.

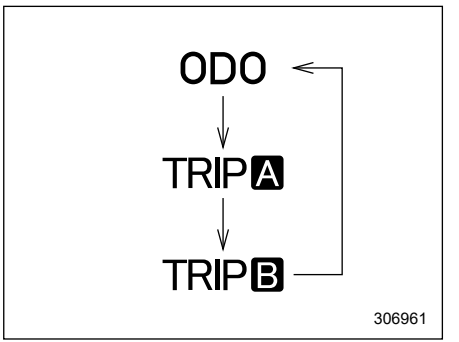

To reset the trip meter, select either the A trip or B trip meter, then press and hold the TRIP RESET switch.

▼ Odometer

The odometer shows the total distance that the vehicle has been driven.

NOTE

If you press the TRIP RESET switch when the ignition switch is in the "OFF" or "ACC" position, the odometer/trip meter will light up. The indicators will turn off when the TRIP RESET switch is not operated for approximately 10 seconds.

▼ Double trip meter

The trip meter shows the distance that the vehicle has been driven since you last set it to zero.

⚠ CAUTION

To ensure safety, do not attempt to change the function of the indicator during driving, as an accident could result.

NOTE

If you press the TRIP RESET switch when the ignition switch is in the "OFF" or "ACC" position, the odometer/trip meter will light up. It is possible to switch between the A trip meter and B trip meter indications while the odometer/trip meter is lit up.

■ Fuel Gauge

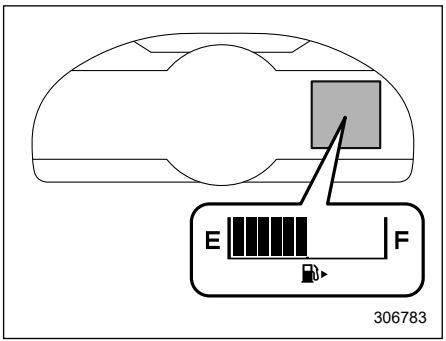

The fuel gauge shows the approximate amount of fuel remaining in the tank.

When the ignition switch is in the “OFF” or “ACC” position, the fuel gauge shows “E” even if the fuel tank contains fuel.

The gauge may move slightly due to fuel level movement in the tank (e.g., during braking, turning or acceleration).

NOTE

You will see the “⛽▶” sign in the fuel gauge. This indicates that the fuel filler lid is located on the right side of the vehicle.

■ Engine Coolant Temperature Gauge

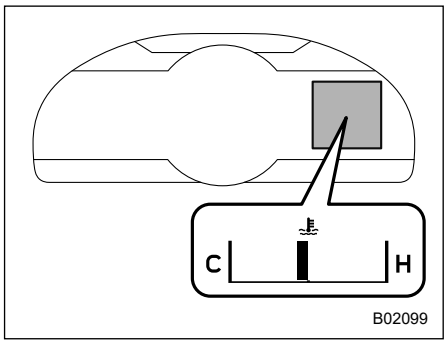

The temperature gauge shows engine coolant temperature when the ignition switch is in the “ON” position.

The coolant temperature will vary in accordance with the outside temperature and driving conditions.

We recommend that you drive moderately until the pointer of the temperature gauge reaches near the middle of the range. Engine operation is optimum with the engine coolant at this temperature range and high revving operation when the engine is not warmed up enough should be avoided.

⚠ CAUTION

If the pointer exceeds the normal operating range, safely stop the vehicle as soon as possible.

Refer to "Engine Overheating" ☞P323.

■ Outside Temperature

Displays the outside temperature within the range of -40°F (-40°C) to 122°F (50°C). Low outside temperature indicator comes on when the ambient temperature is approximately 37°F (3°C) or lower.

NOTE

The outside temperature indicator shows the temperature in the area around the sensor. However, the temperature may not be indicated correctly or the update may be delayed in the following conditions.

– While parking or driving at low speeds

– When the outside temperature changes suddenly (example: when going in and out of an underground parking area or when passing through a tunnel)

– When starting the engine after being parked for a certain period of time

– CONTINUED –

■ Combination Meter Settings

Some meter settings can be set on the center information display. For details, perform the procedures described in "General settings" ☞P165.

3-4. REV indicator light and buzzer

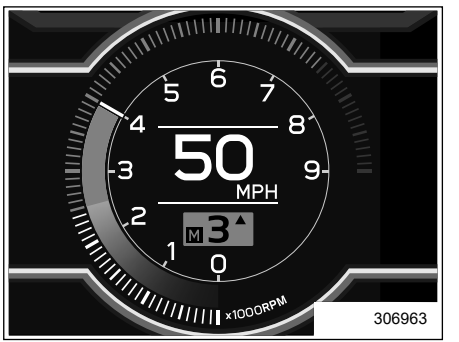

The REV alarm system has the following functions.

- When the engine speed reaches a set speed, the select lever/gear position indicator will illuminate in orange and a buzzer will sound.
- If the engine speed enters the red zone, the select lever/gear position indicator will illuminate in red.

The factory setting (default setting) for this function is set as “OFF”.

To change the REV indicator light and buzzer settings, perform the procedures described in "Settings Display" ☞P161

3-5. Illumination Brightness Control

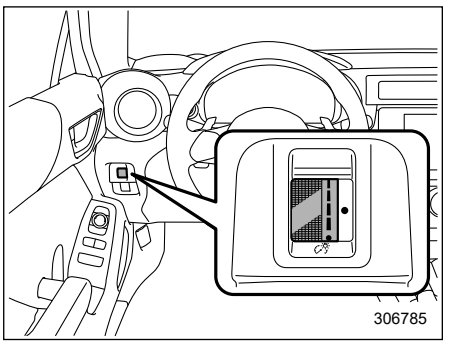

The illumination brightness of the combination meter and center information display dims under the following conditions.

- The light switch is in the “” or “” position when the ambient light is dark.
- The light switch is in the “AUTO” position and the headlights illuminate automatically.

You can adjust the illumination brightness for better visibility.

To brighten, turn the control dial upward.

To darken, turn the control dial downward.

NOTE

- **When the control dial is turned fully upward, the illumination brightness becomes the maximum and the automatic dimming function does not work at all.**
- **The brightness setting is not canceled even when the ignition switch is turned to the "OFF" position.**

■ Auto Dimmer Cancel Function

When the ambient light is bright, the illumination brightness is set to the maximum regardless of the position of the control dial. In this case, you cannot adjust the illumination brightness by using the control dial. When the ambient light is dark, you can dim the illumination brightness as described above.

The operational/non-operational setting and sensitivity of the auto dimmer cancel function can be changed by your SUBARU dealer. Contact your SUBARU dealer for details.

3-6. Warning and Indicator Lights

Several of the warning and indicator lights illuminate momentarily and then go out when the ignition switch is initially turned to the "ON" position. This permits checking the operation of the bulbs.

Apply the parking brake and turn the ignition switch to the "ON" position. For the system check, the following lights illuminate and turn off after several seconds or after the engine has started:

:Seatbelt warning light (The seatbelt warning light turns off only when the driver fastens the seatbelt.)

:Front passenger's seatbelt warning light (The seatbelt warning light turns off only when the front seat passenger fastens the seatbelt.)

:Rear passenger's seatbelt warning light (The seatbelt warning light turns off only when the rear seat passenger fastens the seatbelt.)

:SRS airbag system warning light

:Front passenger's frontal airbag ON indicator light

:Front passenger's frontal airbag OFF indicator light

CHECK / :CHECK ENGINE warning light/ Malfunction indicator light

:Coolant temperature high warning light (red)

:Charge warning light

:Oil pressure warning light

ABS / (ABS):ABS warning light

:Vehicle Stability Control (VSC) warning light/Vehicle Stability Control (VSC) operation indicator light

OFF :Vehicle Stability Control (VSC) OFF indicator light

TRAC OFF :TRAC OFF indicator light

BRAKE / (!):Brake system warning light (red)

:Power steering warning light

(!):Low tire pressure warning light (if equipped)

:Low fuel warning light

:Master warning light

If any lights fail to illuminate, it indicates a burned-out bulb or a malfunction of the corresponding system.

Consult your authorized SUBARU dealer for repair.

■ Seatbelt Warning Light and Chime

Your vehicle is equipped with a seatbelt warning device at the driver's and passenger's seat, as required by current safety standards.

– CONTINUED –

▼ Driver's and front passenger's seats

This device reminds the driver and front passenger to fasten their seatbelts by illuminating the warning lights in the locations indicated in the following illustration and sounding a chime.

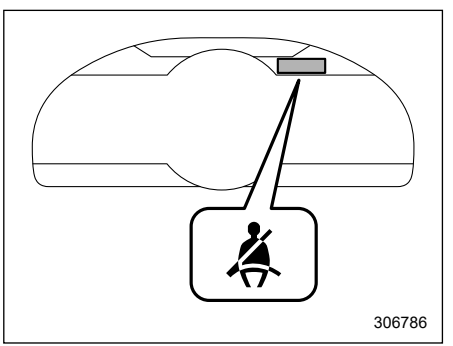

Driver's warning light

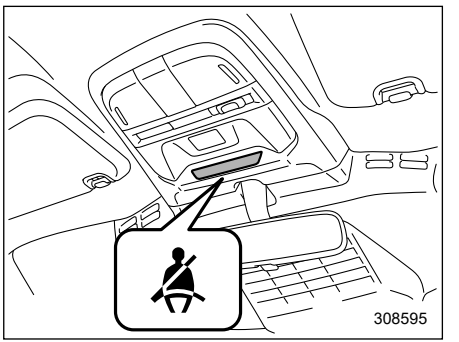

Front passenger's warning light

When the ignition switch is turned to the "ON" position, the driver's and/ or front passenger's warning light will illuminate, then it will blink . If the seatbelt(s) is/are not fastened, the warning light(s) continue(s) to blink and the warning chime(s) may make a beep sound.

NOTE

• If the driver's and/or front passenger's seatbelt(s) are/is not fastened while driving, the seatbelt warning system operates as follows according to the vehicle speed.

- The warning light will illuminate when the vehicle speed is approximately 4 mph (6 km/h) or less.

- The warning light will blink, and the warning chime will make a beep sound when the vehicle speed is between approximately 4 mph (6 km/h) and 13 mph (20 km/h). The warning chime will stop when the vehicle stops.

- The warning light will blink, and the warning chime will sound loudly when a certain number of seconds have elapsed when the vehicle speed is between approximately 4 mph (6 km/h) and 13 mph (20 km/h).

- The warning light will blink, and the warning chime will sound loudly when the vehicle speed is approximately more than 13 mph (20 km/h).

• The warning light will turn off and the warning chime will stop when the seatbelt is fastened.

If there is no passenger on the front passenger's seat, the seatbelt warning system for the front passenger's seat will be deactivated. The front passenger's seatbelt warning system monitors whether or not there is a passenger on the front passenger's seat.

⚠ CAUTION

Observe the following precautions. Failure to do so may prevent the device from functioning correctly or cause the device to fail.

- **Do not install any accessory such as a table or TV onto the seatback.**
- **Do not allow the rear seat occupant to place his/her hands or legs on the front passenger's seatback, or allow him/her to pull the seatback.**
- **Do not use front seats with their backward-forward position and seatback not being locked into place securely. If any of them are not locked securely, adjust them again. For adjusting procedure, refer to"Front Seats" ☞P32.**

If the seatbelt warning system for the front passenger's seat does not function correctly (e.g., it is activated even when the front passenger's seat is empty or it is deactivated even when the front passenger has not fastened his/her seatbelt), take the following actions.

- Ensure that no article is placed on the seat other than a child restraint system and its child occupant, although we strongly recommend that all children sit in the rear seat properly restrained.
- Ensure that the backward-forward position and seatback of front passenger's seat are locked into place securely by moving the seat back and forth.

If still the seatbelt warning system for front passenger's seat does not function correctly after taking relevant corrective actions described above, immediately contact your SUBARU dealer for an inspection.

▼ Rear passenger's seats

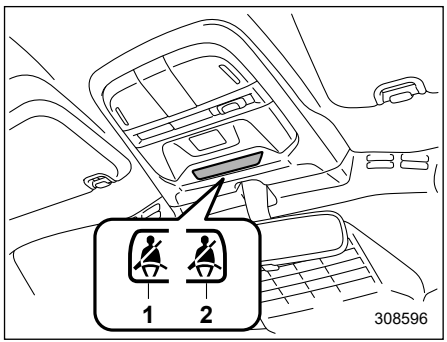

1) Rear seat (left position)
2) Rear seat (right position)

This device reminds the rear passengers to fasten their seatbelts by illuminating the warning lights in the locations indicated in the above illustration and sounding a chime.

⚠ WARNING

- **The driver must check that the all passengers have fastened their seatbelts properly since the seatbelt warning system may not detect passengers under the following circumstances.**

– CONTINUED –

- **When cushions or child restraint systems, etc., are used.**
- **When a child or small adult is sitting in the seat.**

• **Observe the following precautions**
- **Do not apply any strong impact to the rear seat.**
- **Do not fold the seatback forward when objects are on the seat.**
- **Do not spill liquid on the rear seat. If liquid is spilled, wipe it off immediately.**
- **Do not remove or disassemble the rear seat.**

NOTE

• The seatbelt warning system of the rear seat detects if the seat is occupied by a passenger. Heavy cargo or large pets on the rear seat may result in the activation of the passenger seatbelt warning light and chime. Fastening the rear seatbelt prior to loading cargo or large pets will avoid activating the passenger seatbelt warning light and chime.

• When folding the rear seat, ensure that the seat is empty prior to folding. Items caught between the seat bottom and seatback, when folded, may damage the seat surface or activate the passenger seatbelt warning light and chime.

If passengers in the rear seats do not fasten their seatbelts when the ignition switch is in the “ON” position, the seatbelt warning lights will illuminate or blink to indicate that their seatbelts are not fastened.

NOTE

• If the rear passenger’s seatbelt(s) are/is still not fastened while driving, the seatbelt warning system operates as follows according to the vehicle speed.
- **The warning light will illuminate when the vehicle speed is approximately 4 mph (6 km/h) or less.**
- **The warning lights will blink, and the warning chime will make a beep sound when the vehicle speed is between approximately 4 mph (6 km/h) and 13 mph (20 km/h). The warning chime will stop when the vehicle stops.**
- **The warning light will blink, and the warning chime will sound loudly when a certain number of seconds have elapsed when the vehicle speed is between approximately 4 mph (6 km/h) and 13 mph (20 km/h).**
- **The warning light will blink, and the warning chime will sound loudly when the vehicle speed is approximately more than 13 mph (20 km/h).**
- **The loud chime will continue for 35 seconds. After the chime stops, the blinking warning light will illuminate steadily. The warning light will continue to illuminate until their seatbelts are fastened.**

• The warning light will turn off and the warning chime will stop when the seatbelt is fastened.

■ SRS Airbag System Warning Light

⚠ WARNING

If the warning light exhibits any of the following conditions, immediately stop the vehicle in a safe place, and consult a SUBARU dealer. Unless a technician checks and repairs the system as needed, the seatbelt pretensioners and/or the SRS airbag will not operate properly in the event of a collision, which may result in injury.

- **Flashing or flickering of the warning light**
- **No illumination of the warning light when the ignition switch is first turned to the "ON" position**
- **Continuous illumination of the warning light**
- **Illumination of the warning light while driving**

For details about the components monitored by the warning light, refer to "SRS Airbag System Monitors" ☞P89.

■ Front Passenger's Frontal Airbag ON and OFF indicator lights

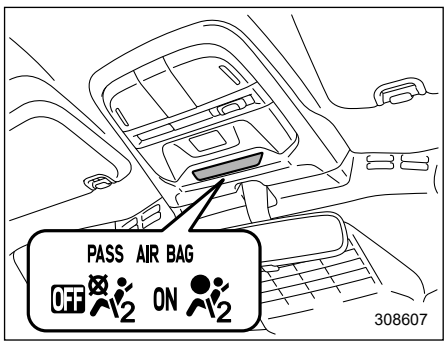

: Front passenger's frontal airbag ON indicator light

: Front passenger's frontal airbag OFF indicator light

The front passenger's frontal airbag ON and OFF indicator lights show you the status of the front passenger's SRS frontal airbag.

The indicator lights are located as shown in the illustration.

When the ignition switch is turned to the "ON" position, both the ON and OFF indicator lights illuminate for 6 seconds during which time the system is checked. Following the system check, both indicator lights turn off for 2 seconds. After that, one of the indicator lights illuminates depending on the status of the front passenger's SRS frontal airbag determined by the SUBARU advanced frontal airbag system monitoring.

If the front passenger's SRS frontal airbag is activated, the passenger's frontal airbag ON indicator light will illuminate while the OFF indicator light will remain off.

If the front passenger's SRS frontal airbag is deactivated, the passenger's frontal airbag ON indicator light will remain off while the OFF indicator light will illuminate.

With the ignition switch turned to the "ON" position, if both the ON and OFF indicator lights remain illuminated or off simultaneously even after the system check period, the system is malfunctioning. Contact your SUBARU dealer immediately for an inspection.

– CONTINUED –

■ CHECK ENGINE Warning Light/ Malfunction Indicator Light

⚠ CAUTION

If the CHECK ENGINE warning light/ malfunction indicator light illuminates while you are driving, have your vehicle checked/repaired by your SUBARU dealer as soon as possible. Continued vehicle operation without having the emission control system checked and repaired as necessary could cause serious damage, which may not be covered by your vehicle's warranty.

If this light illuminates steadily or blinks while the engine is running, it may indicate that there is at least one problem or potential problem somewhere in the emission control system.

▼ If the light illuminates constantly

If the light illuminates constantly while driving or does not turn off after the engine starts, an emission control system malfunction has been detected.

We recommend that you have your vehicle checked by an authorized SUBARU dealer immediately.

NOTE

This light also illuminates when the fuel filler cap is not tightened until it clicks.

If you have recently refueled your vehicle, the cause of the CHECK ENGINE warning light/malfunction indicator light coming on could be a loose or missing fuel filler cap. Remove the cap and retighten it until it clicks. Make sure nothing is interfering with the sealing of the cap. Tightening the cap will not make the CHECK ENGINE warning light/malfunction indicator light turn off immediately. It may take several driving trips. If the light does not turn off, take your vehicle to your authorized SUBARU dealer immediately.

▼ If the light is blinking

If the light is blinking while driving, an engine misfire condition has been detected which may damage the emission control system.

To prevent serious damage to the emission control system, you should conform to the following instructions.

- Reduce vehicle speed.
- Avoid hard acceleration.
- Avoid steep uphill grades.
- Reduce the amount of cargo, if possible.

The CHECK ENGINE warning light/ malfunction indicator light may stop blinking and illuminate steadily after several driving trips. You should have your vehicle checked by an authorized SUBARU dealer immediately.

■ Coolant Temperature Low Indicator Light/ Coolant Temperature High Warning Light

⚠ CAUTION

- **After turning the ignition switch to the "ON" position, if this indicator light/warning light behaves under any of the following conditions, the electrical system may be malfunctioning. Contact your SUBARU dealer immediately for an inspection.**
  - **It remains blinking in RED.**
  - **It remains illuminated in RED for more than 2 seconds.**
- **While driving, if this indicator light/warning light behaves under any of the following conditions, take the specified appropriate measure listed below.**

- **Blinking or illuminated in RED (with the engine coolant temperature gauge in the overheated zone):**
  Safely stop the vehicle as soon as possible, and refer to the emergency steps for the engine overheating. After that, have the system checked by your nearest SUBARU dealer. Refer to "Engine Overheating" ☞P323
- **Illuminated in RED (with the engine coolant temperature gauge below the overheated zone):**
  The electrical system may be malfunctioning. Contact your SUBARU dealer for an inspection.

This coolant temperature low indicator light/coolant temperature high warning light has the following three functions.

- Illumination in **BLUE** indicates insufficient warming up of the engine
- Blinking in **RED** indicates that the engine is close to overheating
- Illumination in **RED** indicates overheating condition of the engine

For the system check, this indicator light/warning light illuminates in **RED** for approximately 2 seconds when the ignition switch is turned to the “ON” position. After that, this indicator light/warning light changes to **BLUE** and maintains illumination in **BLUE**. This **BLUE** illuminated light turns off when the engine is warmed up sufficiently.

If the engine coolant temperature increases over the specified range, the indicator light/warning light blinks in **RED**. At this time, the engine is close to overheating.

If the engine coolant temperature increases further, the indicator light/warning light illuminates in **RED** continuously. At this time, the engine may be overheating.

When the indicator light/warning light blinks in **RED** or illuminates in **RED**, safely stop the vehicle as soon as possible, and refer to the emergency steps for the engine overheating. Refer to "Engine Overheating" ☞P323. After that, have the system checked by your nearest SUBARU dealer.

Also, if the indicator light/warning light often blinks in **RED**, the electrical system may be malfunctioning. Contact your SUBARU dealer for an inspection.

NOTE

If the engine is restarted after a certain driving condition, this indicator light/warning light may illuminate in RED. However, this is not a malfunction if the indicator light/warning light turns off after a short time.

■ Charge Warning Light



If this light illuminates when the engine is running, it may indicate that the charging system is not working properly.

If the light illuminates while driving or does not turn off after the engine starts, stop the engine at the first safe opportunity and check the drive belt. If the belt is loose, broken or if the belt is in good condition but the light remains illuminated, contact your nearest SUBARU dealer immediately.

■ Oil Pressure Warning Light



⚠ CAUTION

Do not operate the engine with the oil pressure warning light on. This may cause serious engine damage.

– CONTINUED –

If this light illuminates when the engine is running, it may indicate that the engine oil pressure is low and the lubricating system is not working properly.

If the light illuminates while driving or does not turn off after the engine starts, stop the engine at the first safe opportunity and contact your nearest SUBARU dealer immediately.

■ AT OIL TEMP Warning Light (AT Models)



If this light illuminates when the engine is running, it may indicate that the transmission fluid temperature is too hot.

If the light illuminates while driving, immediately stop the vehicle in a safe place and let the engine idle until the warning light turns off.

■ Low Tire Pressure Warning Light (If Equipped)



When the ignition switch is turned to the “ON” position, the low tire pressure warning light will illuminate for approximately 2 seconds to check that the tire pressure monitoring system (TPMS) is functioning properly. If there is no problem and all tires are properly inflated, the light will go out.

Each tire, including the spare (if provided), should be checked monthly when cold and inflated to the inflation pressure recommended by the vehicle manufacturer on the vehicle placard or tire inflation pressure label. (If your vehicle has tires of a different size than the size indicated on the vehicle placard or tire inflation pressure label, you should determine the proper tire inflation pressure for those tires.)

As an added safety feature, your vehicle has been equipped with a tire pressure monitoring system (TPMS) that illuminates a low tire pressure telltale when one or more of your tires is significantly underinflated. Accordingly, when the low tire pressure telltale illuminates, you should stop and check your tires as soon as possible, and inflate them to the proper pressure. Driving on a significantly underinflated tire causes the tire to overheat and can lead to tire failure. Under-inflation also reduces fuel efficiency and tire tread life, and may affect the vehicle’s handling and stopping ability.

Please note that the TPMS is not a substitute for proper tire maintenance, and it is the driver’s responsibility to maintain correct tire pressure, even if under-inflation has not reached the level to trigger illumination of the TPMS low tire pressure telltale.

Your vehicle has also been equipped with a TPMS malfunction indicator to indicate when the system is not operating properly. The TPMS malfunction indicator is combined with the low tire pressure telltale. When the system detects a malfunction, the telltale will flash for approximately one minute and then remain continuously illuminated. This sequence will continue upon subsequent vehicle start-ups as long as the malfunction exists. When the malfunction indicator is illuminated, the system may not be able to detect or signal low tire pressure as intended. TPMS malfunctions may occur for a variety of reasons, including the installation of replacement or alternate tires or wheels on the vehicle that prevent the TPMS from functioning properly. Always check the TPMS malfunction telltale after replacing one or more tires or wheels on your vehicle to ensure that the replacement or alternate tires and wheels allow the TPMS to continue to function properly.

Should the warning light illuminate steadily after blinking for approximately one minute, have the system inspected by your nearest SUBARU dealer as soon as possible.

⚠ WARNING

If this light does not illuminate briefly after the ignition switch is turned on or the light illuminates steadily after blinking for approximately one minute, you should have your Tire Pressure Monitoring System checked at a SUBARU dealer as soon as possible.

If this light illuminates while driving, never brake suddenly. Instead, perform the following procedure. Otherwise an accident involving serious vehicle damage and serious personal injury could occur.

1) **Keep driving straight ahead while gradually reducing speed.**
2) **Slowly pull off the road to a safe place.**
3) **Check the pressure for all four tires and adjust the pressure to the COLD tire pressure shown on the tire inflation pressure label on the door pillar on the driver's side.**

If this light still illuminates while driving after adjusting the tire pressure, a tire may have significant damage and a fast leak that causes the tire to lose air rapidly. If you have a flat tire, refer to "Flat Tires" ☞P311.

When a replacement tire is mounted or a wheel rim is replaced without the original pressure sensor/transmitter being transferred, the Low tire pressure warning light will illuminate steadily after blinking for approximately one minute. This indicates the TPMS is unable to monitor all four road wheels. Contact your SUBARU dealer as soon as possible for tire and sensor replacement and/or system resetting. If the light illuminates steadily after blinking for approximately one minute, promptly contact a SUBARU dealer to have the system inspected.

⚠ CAUTION

The tire pressure monitoring system is NOT a substitute for manually checking tire pressure. The tire pressure should be checked periodically (at least monthly) using a tire gauge. After any change to tire pressure(s), the tire pressure monitoring system will not re-check tire inflation pressures until the vehicle is first driven more than 25 mph (40 km/h). After adjusting the tire pressures, increase the vehicle speed to at least 25 mph (40 km/h) to start the TPMS re-checking of the tire inflation pressures. If the tire pressures are now above the severe low pressure threshold, the low tire pressure warning light should turn off a few minutes later. Therefore, be sure to install the specified size for the front and rear tires.

– CONTINUED –

■ ABS Warning Light

ABS/

⚠ CAUTION

- **If any of the following conditions occur, we recommend that you have the ABS (Anti-Lock Brake System) repaired at the first available opportunity by your SUBARU dealer.**
  - **The warning light does not illuminate when the ignition switch is turned to the "ON" position.**
  - **The warning light illuminates when the ignition switch is turned to the "ON" position, but it does not turn off even after starting the vehicle.**
  - **The warning light illuminates during driving.**
- **When the warning light is on (and brake system warning light is off), the ABS function shuts down; however, the conventional brake system continues to operate normally.**

The ABS warning light illuminates together with the brake system warning light if the EBD system malfunctions. For further details of the EBD system malfunction warning, refer to "Brake System Warning Light" ☞P144.

NOTE

If the warning light behavior is as described in the following conditions, the ABS may be considered normal.

- **The warning light illuminates right after the engine is started but turns off immediately, remaining off.**
- **The warning light remains illuminated after the engine has been started, but it turns off while driving.**
- **The warning light illuminates during driving, but it turns off immediately and remains off.**

When driving with an insufficient battery voltage such as when the engine is jump started, the ABS warning light may illuminate. This is due to the low battery voltage and does not indicate a malfunction. When the battery becomes fully charged, the light will turn off.

■ Brake System Warning Light

BRAKE/

⚠ WARNING

- **Driving with the brake system warning light on is dangerous. This indicates your brake system may not be working properly. If the light remains illuminated, have the brakes inspected by a SUBARU dealer immediately.**
- **If at all in doubt about whether the brakes are operating properly, do not drive the vehicle. Have your vehicle towed to the nearest SUBARU dealer for repair.**

This light has the following functions.

▼ Parking brake warning

The light illuminates with the parking brake applied while the ignition switch is in the "ACC" or "ON" position. It turns off when the parking brake is fully released.

▼ Brake fluid level warning

This light illuminates when the brake fluid level has dropped to near the "MIN" level of the brake fluid reservoir with the ignition switch in the "ON" position and with the parking brake fully released.

If the brake system warning light should illuminate while driving (with the parking brake fully released and with the ignition switch positioned in “ON”), it could be an indication of leaking of brake fluid or worn brake pads. If this occurs, immediately stop the vehicle at the nearest safe place and check the brake fluid level. If the fluid level is below the “MIN” mark in the reservoir, do not drive the vehicle. Have the vehicle towed to the nearest SUBARU dealer for repair.

▼ Electronic Brake Force Distribution (EBD) system warning

If the warning light remains on even though the parking brake is released, the brake fluid level may be low or there could be a problem with the EBD system. Park the vehicle in a safe place immediately and contact a SUBARU dealer.

▼ Vacuum pressure system warning

The brake system warning light will illuminate when the vacuum pressure sensor is malfunctioning or brake booster pressure is decreasing. If the light continues to illuminate for several minutes after starting the engine, there may be a malfunction in the vacuum system. In this case, drive the vehicle carefully and have the system inspected by a SUBARU dealer.

■ Low Fuel Warning Light

The low fuel warning light illuminates when the tank is nearly empty approximately 1.8 US gal (7.0 liters, or 1.5 Imp gal). It only operates when the ignition switch is in the “ON” position.

⚠ CAUTION

Promptly put fuel in the tank whenever the low fuel warning light illuminates. Engine misfires as a result of an empty tank could cause damage to the engine.

■ Door Open Indicator

When any of the doors or the trunk lid is not fully closed, the door open indicator appears. This function is effective even if the ignition switch is in the “OFF” or “ACC” position.

The open door is indicated by the corresponding part of the door open indicator.

Always make sure this indicator does not appear before you start to drive.

■ Power Steering Warning Light

When the engine is running, a warning light illuminates and a buzzer sounds if a malfunction is detected in the electric power steering system.

⚠ CAUTION

- **When the power steering warning light is illuminated, there may be more resistance when the steering wheel is operated.**
- **When the power steering warning light remains on or an interrupt screen was displayed, drive carefully to the nearest SUBARU dealer and have the vehicle inspected immediately.**

NOTE

If the steering wheel is operated in the following ways, the power steering control system may temporarily limit the power assist in order to prevent the system components, such as the control computer and drive motor, from overheating.

- **The steering wheel is operated frequently and turned sharply while the vehicle is maneuvered at extremely low speeds, such as while frequently turning the steering wheel during parallel parking.**
- **The steering wheel remains in the fully turned position for a long period of time.**

– CONTINUED –

At this time, there will be more resistance when steering. However this is not a malfunction. Normal steering force will be restored after the steering wheel is not operated for a while and the power steering control system has an opportunity to cool down. However, if the power steering is operated in a non-standard way which causes power assist limitation to occur too frequently, that may result in a malfunction of the power steering control system.

■ TRAC OFF Indicator Light

TRAC OFF

This light illuminates when the TRAC system is off. For details, refer to "Vehicle Stability Control (VSC)/TRAC System" ☞P253.

■ Vehicle Stability Control (VSC) Warning Light/Vehicle Stability Control (VSC) Operation Indicator Light

▼ **Vehicle Stability Control (VSC) warning light**

⚠ CAUTION

The Vehicle Stability Control (VSC) system provides its ABS control through the electrical circuit of the ABS. Accordingly, if the ABS is inoperative, the Vehicle Stability Control (VSC) system becomes unable to provide ABS control. As a result, the Vehicle Stability Control (VSC) system becomes inoperative, causing the warning light to illuminate. Although both the Vehicle Stability Control (VSC) and ABS are inoperative in this case, the ordinary functions of the brake system are still available. You will be safe while driving in this condition, but drive carefully and have your vehicle checked at a SUBARU dealer as soon as possible.

NOTE

- **If the electrical circuit of the Vehicle Stability Control (VSC) system itself malfunctions, the warning light only illuminates. At this time, the ABS (Anti-lock Brake System) remains fully operational.**
- **The warning light illuminates when the electronic control system of the ABS/Vehicle Stability Control (VSC) system malfunctions.**

The Vehicle Stability Control (VSC) system is probably inoperative under any of the following conditions. Have your vehicle checked at a SUBARU dealer immediately.

- The warning light does not illuminate when the ignition switch is turned to the “ON” position.
- The warning light illuminates while the vehicle is running.

NOTE

If the warning light behavior is as described in the following examples, the Vehicle Stability Control (VSC) system may be considered normal.

- **The warning light illuminates right after the engine is started but turns off immediately and remains off.**
- **The warning light illuminates after the engine has started and turns off**

while the vehicle is subsequently being driven.

- **The warning light illuminates during driving, but turns off immediately and remains off.**

▼ Vehicle Stability Control (VSC) operation indicator light

The indicator light flashes during activation of the skid suppression function and during activation of the TRAC system.

NOTE

- **The light may remain illuminated for a short period of time after the engine has been started, especially in cold weather. This does not indicate the existence of a problem. The light should turn off as soon as the engine has warmed up.**
- **The indicator light illuminates when the engine has developed a problem and the CHECK ENGINE warning light/ malfunction indicator light is on.**

The Vehicle Stability Control (VSC) system is probably malfunctioning under the following condition. Have your vehicle checked at a SUBARU dealer as soon as possible.

- The light does not turn off even after the lapse of several minutes (the engine has warmed up) after the engine has started.

■ Vehicle Stability Control (VSC) OFF Indicator Light

The light illuminates when “Vehicle Stability Control (VSC)” is selected to deactivate the Vehicle Stability Control (VSC) system.

The Vehicle Stability Control (VSC) system is probably malfunctioning under any of the following conditions. Have your vehicle checked at a SUBARU dealer immediately.

- The light does not illuminate while the system check.
- The light does not turn off even after a period of approximately 2 seconds after the ignition switch has been turned to the “ON” position.

■ Warning Chimes and Warning Indicator of the Keyless Access with Push-Button Start System

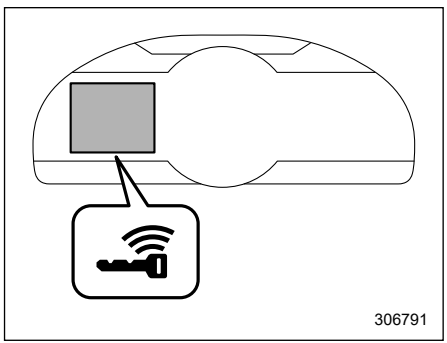

Access key warning indicator

The keyless access with push-button start system is equipped with a warning chime and the access key warning indicator in order to minimize improper operations and help protect your vehicle from theft.

When the warning chime sounds and/or the warning indicator appears, take the appropriate action.

You cannot turn the warning chimes off. However, the volume setting of the outside warning chime can be changed by a SUBARU dealer. Consult your SUBARU dealer for details.

– CONTINUED –

⚠ WARNING

Never drive the vehicle if a steering lock warning message is displayed on the combination meter when starting the engine. This indicates the status that the steering lock is not released and could result in an accident involving serious injury or death.

⚠ CAUTION

- **If a steering lock system malfunction warning message is displayed on the combination meter, there could be a steering lock malfunction. Contact your SUBARU dealer as soon as possible.**
- **When the keyless access system warning message is displayed on the combination meter, contact a SUBARU dealer immediately.**

NOTE

• Even when the access key fob is within the operating ranges inside the vehicle, the access key warning for engine start may be provided depending on the status of the access key fob and the environmental conditions.

• When the access key fob is taken out of the vehicle through an open window, the access key takeout warning or passenger access key takeout warning will not be provided.

▼ List of warnings

⚠ CAUTION

When any of the following warnings occurs even if the access key warning indicator does not appear, take the appropriate action.

Inside warning chime	Outside warning chime	Status	Action
Ding, ding ... (intermittent)	—	The driver's door is opened while the push-button ignition switch is "ACC". (in AT models, when the select lever is in the "P" position.)	Switch the push-button ignition switch to "OFF", or close the driver's door. When exiting the vehicle, be sure to switch the push-button ignition switch to "OFF".
		The push-button ignition switch is switched to "OFF" while the driver's door is open.	Close the driver's door.
Ding	Short beep (2 seconds)	**Lockout warning:** The doors are locked by following methods when an access key fob is left in the car. • The door is closed when the lock lever of the door is in the lock position. • The door is closed when the power door locking switch is in the lock position.	Take out the access key fob from the vehicle, and lock the doors. The doors cannot be locked while the access key fob is inside the vehicle. A chirp sound will be heard, and all doors will be unlocked.
—	Short beep (2 seconds)	**Access key lock-in warning:** The door lock sensor is touched while the push-button ignition switch is "OFF" and the access key fob is inside the vehicle.	Take out the access key fob from the vehicle, and lock the doors. If the access key fob is inside the vehicle, the doors cannot be locked.
—	Short beep (5 seconds)	**Door ajar warning:** The door lock sensor is touched while the ignition switch is in the "OFF" position and one of the doors is opened.	Close the doors securely and lock them. If one of the doors is opened, the doors cannot be locked.
Ding	Long beep (60 seconds max.)	**Power warning:** For AT models, the door lock sensor is touched while you are carrying the access key fob, the push-button ignition switch is in a position other than "OFF" and the select lever is in the "P" position.	Return the access key fob inside the vehicle, or switch the push-button ignition switch to "OFF". If the push-button ignition switch is not switched to "OFF", the doors cannot be locked.
Ding, ding ... (7 seconds)	—	**Access key warning:** The vehicle is driven while the access key fob is not inside the vehicle.	Carry the access key fob, and drive the vehicle.

– CONTINUED –

Inside warning chime	Outside warning chime	Status	Action
Ding	—	**Access key warning for engine start:** The push-button ignition switch is pressed while the access key fob is not inside the vehicle.	Carry the access key fob, and press the push-button ignition switch.
Ding	Beep, beep, beep (3 times)	**Access key takeout warning:** The driver exits the vehicle with the access key fob and closes the driver's door while the push-button ignition switch is in a position other than "OFF" and the select lever is in the "P" position.	Switch the push-button ignition switch to "OFF", and get out of the vehicle.
Ding	Beep, beep, beep (3 times)	**Passenger access key takeout warning:** A fellow passenger exits the vehicle with the access key fob and closes a door other than the driver's door while the push-button ignition switch is in a position other than "OFF".	Return the access key fob to inside the vehicle, or switch the push-button ignition switch to "OFF".
Long beep (continuous)	Long beep (continuous)	**Access key takeout without "P" position warning (AT models):** The driver exits the vehicle with the access key fob and closes the driver's door while the push-button ignition switch is in a position other than "OFF" and the select lever is in a position other than the "P" position.	Shift the select lever to the "P" position, switch the push-button ignition switch to "OFF" and exit the vehicle.
Long beep (continuous)	—	**Select lever position warning (AT models):** • Case 1: The engine is turned off by pressing the push-button ignition switch while the select lever is in a position other than the "P" position. • Case 2: The driver's door is opened while the push-button ignition switch is in a position other than "OFF" and the select lever is in a position other than the "P" position.	• Case 1: Start the engine, shift the select lever to the "P" position, switch the push-button ignition switch to "OFF" and exit the vehicle. • Case 2: Shift the select lever to the "P" position, switch the push-button ignition switch to "OFF" and exit the vehicle.
Ding	—	The battery of the access key fob is low.	Replace the battery of the access key fob. For details, refer to "Replacing Battery" ☞P384.

Inside warning chime	Outside warning chime	Status	Action
Ding	—	**Steering lock warning:** The engine start procedure is performed, but the steering is still locked.	While turning the steering wheel right and left lightly, depress the brake pedal and press the push-button ignition switch.
Ding	—	**System malfunction warning:** A malfunction is detected in the power system or steering lock.	Contact a SUBARU dealer immediately and have the vehicle inspected.

– CONTINUED –

■ Security Indicator Light

This indicator light shows the status of the alarm system. It also indicates operation of the immobilizer system.

In the event that an unauthorized key is used (for example, the key is unregistered or the ID code does not match), the power is not switched to “ON” and the security indicator light continues blinking.

If the indicator light does not blink in the above conditions, it may indicate that immobilizer system may be malfunctioning. Contact your nearest SUBARU dealer immediately.

▼ Alarm system

It blinks to show the driver the operational status of the alarm system. For detailed information, refer to "Alarm System" ☞P117.

▼ Immobilizer system

The security indicator light starts blinking in the following conditions.

- Immediately after the push-button ignition switch is turned to the “OFF” position.
- Immediately after the driver’s door is opened or closed when all of the following conditions are met.
  - The push-button ignition switch is in the “ON” or “ACC” position.
  - The engine is not running.

In the event that an unauthorized key is used (for example, the key is unregistered or the ID code does not match), the power is not switched to “ON” and the security indicator light continues blinking.

If the indicator light does not blink in the above conditions, it may indicate that immobilizer system may be malfunctioning. Contact your nearest SUBARU dealer immediately.

In the event that an unauthorized key (for example, an unauthorized duplicate) is used, the security indicator light illuminates. For details about the immobilizer system, refer to "Immobilizer" ☞P110.

NOTE

- **The security indicator light remains off in the following conditions. It means that the matching of the ID code is completed and the immobilizer system is deactivated, and it does not indicate a malfunction.**
  - **While the engine is running**
  - **The push-button ignition switch has been turned to the “ON” or “ACC” position and the driver’s door has not been opened or closed**
- **Even if a malfunction occurs, such as the security indicator light flashes irregularly, it will not affect the functionality of the immobilizer system.**

■ Drive Mode Indicator Light

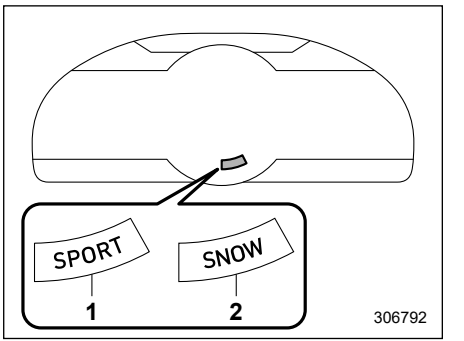

Drive mode indicator light

1) Sport mode
2) Snow mode (AT models)

This light indicates the current drive mode.

For details of drive mode, refer to "Driving Mode Select Switch" ☞P246.

■ Select Lever (AT Models Only)/Gear Position Indicator

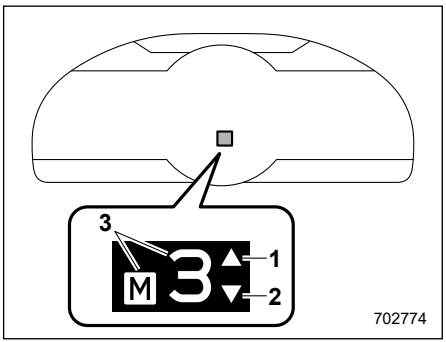

1) Upshift indicator
2) Downshift indicator (AT models only)
3) Select lever (AT models only)/gear position indicator

This indicator shows the position of the shift lever (MT models)/select lever (AT models).

▼ Gear shift indicator (MT models)

When shifting up is recommended for good fuel economy, the upshift indicator blinks. Refer to "Gear shift indicator" ☞P239.

▼ Upshift/downshift indicator (AT models)

When the manual mode is selected, the gear position indicator (which shows the current gear selection) and the available upshift/downshift indicator light up. Refer to "Selection of Manual Mode" ☞P244

■ Turn Signal Indicator Lights

These lights show the operation of the turn signal or lane change signal.

If the indicator lights do not blink or blink rapidly, the turn signal bulb may be burned out. Have your vehicle inspected by your SUBARU dealer as soon as possible.

■ High Beam Indicator Light

This light shows that the headlights are in the high beam mode.

This indicator light also illuminates when operating the headlight flasher.

■ High Beam Assist Indicator

This indicator appears when the high beam assist function is activated. For details about the high beam assist function, refer to "High Beam Assist Function" ☞P181.

■ Automatic Headlight Beam Leveler Warning Light

This light illuminates when the automatic headlight beam leveler does not operate normally.

If this light illuminates while driving or does not turn off approximately 3 seconds after turning the ignition switch to the “ON” position, have your vehicle inspected at your SUBARU dealer.

■ LED Headlight Warning Light

This light illuminates if the LED headlights malfunction. Have your vehicle inspected at a SUBARU dealer as soon as possible.

– CONTINUED –

■ Steering Responsive Headlight OFF Indicator Light (If Equipped)

This light illuminates when the Steering Responsive Headlight function is off. For details, refer to"Driving Support System Settings Display" ☞P161.

■ Steering Responsive Headlight Warning Light (If Equipped)

The light illuminates when a malfunction occurs in the Steering Responsive Headlight. Refer to "Steering Responsive Headlight (SRH) (If Equipped)" ☞P184.

■ Headlight Indicator Light

This indicator light illuminates under the following conditions.

- When the light switch is turned to the "≡D◇≡" or "≡D" position
- When the light switch is in the "AUTO" position and the headlights illuminate automatically

■ Hill Start Assist Indicator Light

When the hill start assist function is enabled, this indicator light will be illuminated. It will disappear when the hill start assist function is deactivated.

■ BSD/RCTA Warning Indicator (If Equipped)

This warning indicator appears on the combination meter display (color TFT) when the BSD (Blind Spot Detection) or RCTA (Rear Cross Traffic Alert) is malfunctioning for any reason. For further details, refer to "BSD/RCTA Warning Indicator" ☞P277. If this indicator remains displayed, have your vehicle inspected by your SUBARU dealer as soon as possible.

■ BSD/RCTA OFF Indicator (If Equipped)

This indicator appears on the combination meter display (color TFT) when "BSD/RCTA" is selected to deactivate the BSD (Blind Spot Detection) and RCTA (Rear Cross Traffic Alert), or when the BSD/RCTA is suspended temporarily. For details, refer to "BSD/RCTA OFF Indicator" ☞P276.

■ Icy Road Surface Warning Indicator

When the outside temperature is approximately 37°F (3°C) or less, the icy road surface warning indicator will illuminate to inform the driver that the road surface may be frozen.

NOTE

• The outside temperature indicator shows the temperature in the area around the sensor. However, the temperature may not be indicated correctly or the update may be delayed in the following conditions.

- While parking or driving at low speeds

- When the outside temperature changes suddenly (example: when going in and out of an underground parking area or when passing through a tunnel)

- When starting the engine after being parked for a certain period of time

• The icy road surface warning indicator should be treated only as a guide. Be sure to check the condition of the road surface before driving.

• Once the icy road surface warning indicator appears, it will not disappear unless the outside temperature has increased to approximately 41°F (5°C) or higher.

■ RAB/Sonar Audible Alarm Warning Indicator (If Equipped)



▼ **AT models**

This indicator illuminates if the Reverse Automatic Braking (RAB) System malfunctions. Refer to "Reverse Automatic Braking (RAB) System (If Equipped)" ☞P280.

▼ **MT models**

This indicator illuminates if the Sonar Audible Alarm System malfunctions. Refer to "Sonar Audible Alarm System (If Equipped)" ☞P289

■ RAB OFF Indicator (If Equipped)



This indicator illuminates when the Reverse Automatic Braking (RAB) System is turned OFF, or when the Reverse Automatic Braking (RAB) System is suspended temporarily. Refer to "Reverse Automatic Braking (RAB) System (If Equipped)" ☞P280.

■ Sonar Audible Alarm OFF Indicator (If Equipped)



▼ **AT models**

This indicator illuminates when the Sonar Audible Alarm function is turned OFF, or when the Sonar Audible Alarm function is suspended temporarily. Refer to "Reverse Automatic Braking (RAB) System (If Equipped)" ☞P280.

▼ **MT models**

This indicator illuminates when the Sonar Audible Alarm System is turned OFF, or when the Sonar Audible Alarm System is suspended teporarily. Refer to "Sonar Audible Alarm System (If Equipped)" ☞P289

■ Master Warning Light



A buzzer sounds and the warning light comes on and flashes to indicate that the master warning system has detected a malfunction.

3-7. Combination Meter Display (Color TFT)

⚠ WARNING

Always pay adequate attention to safe driving when operating the combination meter display (color TFT) while the vehicle is in motion. When operation of the combination meter display (color TFT) interferes with your ability to concentrate on driving, stop the vehicle before performing operations on the screen. Also, do not concentrate on the display while driving. Doing so may cause you to look away from the road and could result in an accident.

Various information will be shown on the combination meter display (color TFT). Also, a warning message will appear on the display if a malfunction is detected. In addition, several settings for the displayed content can be performed.

– CONTINUED –

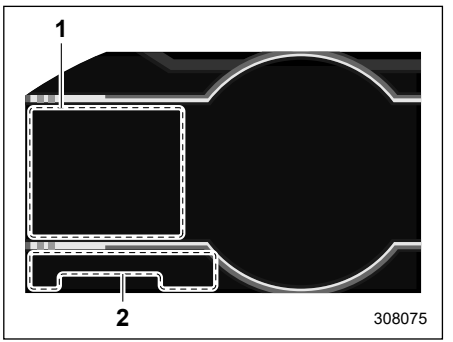

Combination meter display (color TFT)

1) Meter information screen (Refer to "Meter Information Screen" ☞P156.)
2) Telltale screen (Refer to "Telltale Screen" ☞P163.)

■ Basic Operation

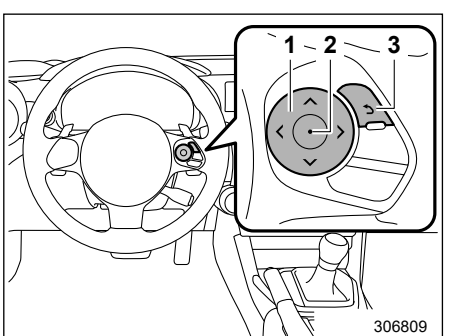

Control switches

1) ‹ / › : Select menu icons
   ^ / v : Change displayed content, scroll up/down the screen and move the cursor up/down
2) Press: Enter
   Press and hold: Reset
3) Return to the previous screen

For information pertaining to the content of each menu icon, refer to the explanation of each item under the heading of the relevant menu icon.

■ Meter Information Screen

The meter information screen can be changed.

▼ Menu icons

Select a menu icon to display its content.

Icons	Page
Drive information	157
Exclusive content for SUBARU BRZ	158
Navigation system-linked display*1	160and refer to the separate audio Owner's Manual.
Audio system-linked display	160
EyeSight screen	Refer to the Owner's Manual supplement for the EyeSight system.
Driving support system settings display	161
Settings display	161
Warning message display	163

*1: Displayed when the Apple CarPlay or Android Auto is operating. For details, refer to the separate audio Owner's Manual.

■ Drive Information

▼ Drive information (page 1)

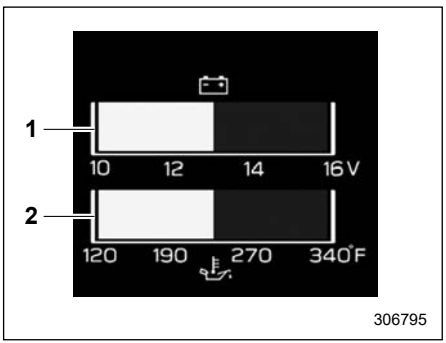

1) Voltmeter
2) Engine oil temperature gauge

This screen displays the charging voltage and engine temperature.

As voltage displayed may be different from the actual battery voltage, use the voltmeter as a guideline.

▼ Drive information (page 2)

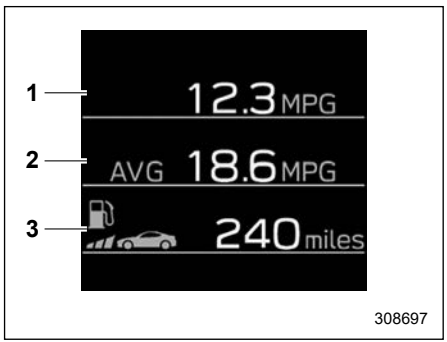

1) Current fuel consumption
2) Average fuel consumption
3) Driving range

This screen displays the current rate of fuel consumption, average fuel consumption since the function was reset and estimated maximum distance that can be driven with the quantity of fuel remaining.

- Pressing and holding ⊙ will reset the average fuel consumption.
- Use the displayed fuel consumption as a reference.
- This distance is computed based on your average fuel consumption. As a result, the actual distance that can be driven may differ from that displayed.
- When only a small amount of fuel is added to the tank, the display may not be updated. When refueling, turn the push-button ignition switch off. If the vehicle is refueled without turning the push-button ignition switch off, the display may not be updated.

▼ Drive information (page 3)

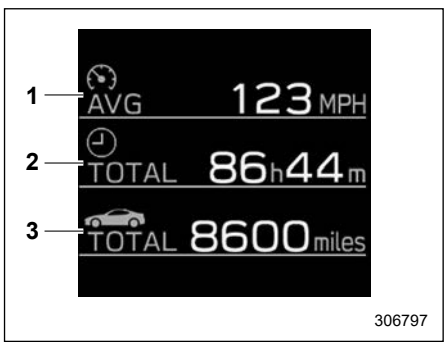

1) Average vehicle speed
2) Driving time
3) Driving distance

This screen displays the average vehicle speed since display was reset, cumulative time the vehicle has been driven since display was reset and the cumulative distance the vehicle has been driven since display was reset.

– CONTINUED –

Pressing and holding ⊙ will reset the average vehicle speed/driving time/ driving distance.

▼ **Drive information (page 4) (if equipped)**

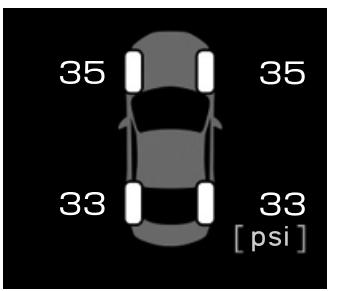

702781

This screen displays each tire pressure.

When a tire is deflated, the deflated tire and the tire pressure will be displayed on the screen in yellow.

NOTE

• The tire pressure values are displayed several minutes after driving.

• Once the tire pressure monitoring system detects the low tire pressure, the tire pressure values will display in yellow until the system detects the normal tire pressure.

• Immediately adjust the tire pressure when the warning light illuminates. When the tire pressure monitoring system detects the adjusted tire pressure, the warning light will turn off and the tire pressure values will turn to white.

• For information about the specified value of the air pressure, refer to "Tires" ☞P393

■ Exclusive Content for SUBARU BRZ

▼ **G-force**

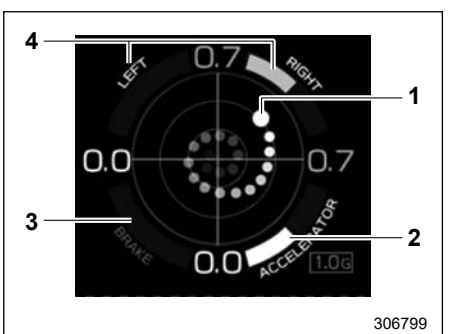

306799

1) Acceleration G-force on the vehicle
2) Accelerator pedal input
3) Brake fluid pressure
4) Steering amount

This screen displays lateral G-forces on the vehicle.

Also displays, around the periphery of the G-force display, the left and right steering amount, accelerator pedal input, and brake fluid pressure.

This display is intended for use as a guideline. Depending on factors such as the road surface condition, temperature and vehicle speed, the display may not show the actual condition of the vehicle.

Press and hold ⊙ to change the range of the acceleration G-force display between 1.0 G and 0.5 G.

▼ **G-force (peak hold function)**

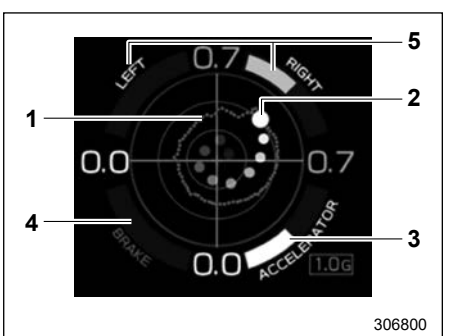

306800

1) Record of the maximum G-forces
2) Acceleration G-force on the vehicle
3) Accelerator pedal input

4) Brake fluid pressure
5) Steering amount

This screen displays lateral G-forces on the vehicle

Also displays, around the periphery of the G-force display, the left and right steering amount, accelerator pedal input, and brake fluid pressure

This display is intended for use as a guide-line. Depending on factors such as the road surface condition, temperature and vehicle speed, the display may not show the actual condition of the vehicle.

Press and hold ⊙ to reset the record of maximum G-forces.

▼ Power and torque curve

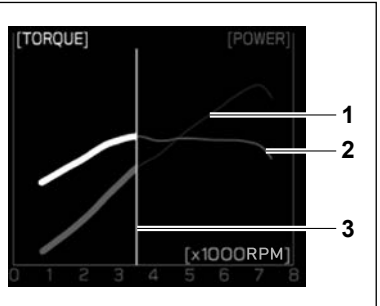

1) Power output
2) Torque
3) Current engine speed

The vertical bar will slide laterally according to the current engine speed.

This chart is intended for reference only and does not show the actual engine torque or output.

▼ Stopwatch



Top screen

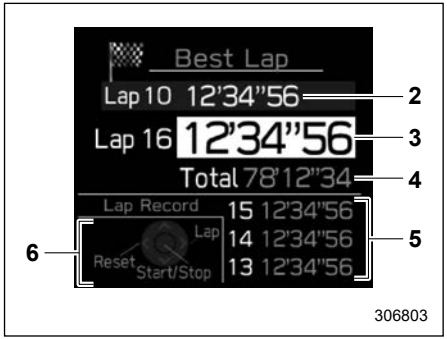

Measurement screen

1) Fastest lap time (top screen)
2) Fastest lap time (measurement screen)
3) Current lap time
4) Total lap time
5) Past lap times
6) Meter control switch operation guide

When the timer is reset, "– –'– –"– –" will be displayed.

A maximum of 50 lap times can be recorded.

- Changing between the stopwatch screens

To change to the measurement screen: Press ⊙.

To change to the top screen: Press ⮌.

- Operating the measurement screen

⊙ : Start/stop measurement

› : Mark off one lap

– CONTINUED –

〈 : Reset measured lap times
∧ / ∨ : Scroll through the lap times

- Resetting measured lap times

After stopping the measurement, press 〈 .

- To display other content while the stopwatch is operating

If the measurement screen is displayed, press ↩ to display the top screen. Then operate the meter control switches to display other content. While other items are displayed, the measurement will continue but the stopwatch cannot be operated.

■ Navigation System-Linked Display

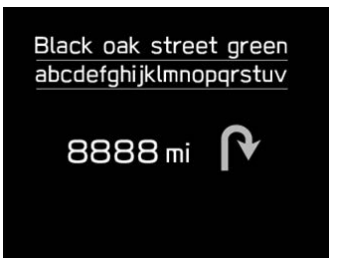

306798

When the route guidance is set in the navigation system, this item shows the navigation route information. For details about the audio system, refer to the separate audio Owner's Manual.

■ Audio System-Linked Display

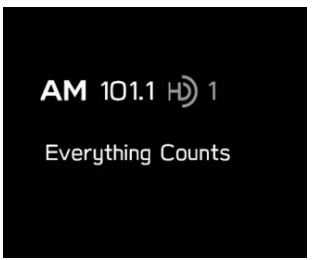

306879

This screen displays the status of audio information. For details about the audio system, refer to the separate audio Owner's Manual.

■ Driving Support System Settings Display

The setting adjustments to the following systems can be changed to meet your personal requirements.

- LDW (Lane Departure Warning)*1
- PCB (Pre-Collision Braking)*1
- FCW(Forward Collision Warning)*1
- BSD/RCTA*2
- RAB (Reverse Automatic Braking system)*2
- (Sonar Audible Alarm)*2
- SRH (Steering Responsive Headlight)*2

*1: For details about EyeSight system, refer to the Owner's Manual supplement for the EyeSight system.
*2: If equipped

■ Settings Display

Use the meter control switches on the steering wheel to change settings.

1. Press ‹ or › to select .
2. Operate the switches to select a desired item.
3. Press ^ / v or ‹ / › to change the setting and then press ⊙ to confirm the change.

– CONTINUED –

Item			Settings	Page reference for the vehicle system operation
EyeSight	Acquisition Sound		ON/OFF	*2
	Start Alert		ON/OFF	
	Accel Lv.		Lv.1 (Eco)/Lv.2 (Comfort)/Lv.3 (Standard)/Lv.4 (Dynamic)	
	Select Drive Lane		Right Lane/Left Lane	
Units			km, km/h, l/100km / miles, MPH, MPG	131, 155 and *2
Warning Volume *1			Max/Mid/Min	280 and *2
Screen Settings	Startup Scrn		ON/OFF	-
	GSI (MT models)		ON/OFF	239
	REV.	Indicator	ON/OFF	134
		RPM	**00rpm	
		Buzzer	ON/OFF	
Car Settings	Keyless Entry	Audible Signal *1	ON/OFF	107 and 112
		Hazard Flasher	ON/OFF	108 and 112
		Driver Door Unlock	Driver Door Only/All	102
	Defogger		15 minutes/Continuous	189
	Interior Light		7.5 seconds/15 seconds/30 seconds	216
	Auto Light Sensor	Light Sensitivity	Min/Low/Mid/High/Max	178
		Wiper Link	ON/OFF	179
	Welcome Lighting	Approaching Time Set	30 seconds/60 seconds/90 seconds/OFF	179
		Leaving Time Set	30 seconds/60 seconds/90 seconds/OFF	
	1-Touch LN CHGR		ON/OFF	186

*1: If equipped
*2: For details about EyeSight system, refer to the Owner's Manual supplement for the EyeSight system.

■ Warning Message Display

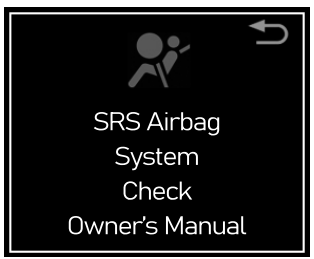

Example of warning

If there is a warning message or a maintenance notification, it will appear on combination meter display (color TFT). Take the appropriate actions based on the messages indicated.

■ Telltale Screen

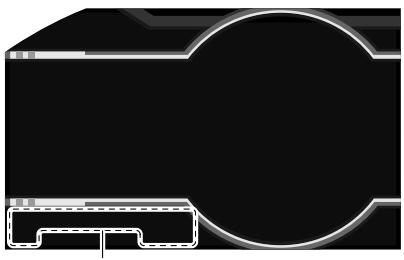

1) Telltale screen

When the corresponding situation occurs, the following telltales will be displayed on the telltale screen.

Mark	Name	Page
	Door open indicator	145
	Low tire pressure warning light (if equipped)	142
A/T OIL TEMP	AT OIL TEMP warning light (AT models)	142
	LED headlight warning light	153
A	High beam assist indicator light	153
SRH OFF	Steering Responsive Headlight OFF indicator light (if equipped)	154
SRH	Steering Responsive Headlight warning light (if equipped)	154
P	RAB/Sonar Audible Alarm warning indicator (if equipped)	155
RAB OFF	RAB OFF indicator (if equipped)	155
P OFF	Sonar Audible Alarm OFF indicator (if equipped)	155
	BSD/RCTA warning indicator (if equipped)	154
OFF	BSD/RCTA OFF indicator light (if equipped)	154
	Automatic headlight beam leveler warning light	153
	Hill start assist indicator light	154
	Icy road surface warning indicator	154

3-8. Center Information Display (CID)

⚠ WARNING

Always pay attention to safe driving when operating the center information display while the vehicle is in motion. When operation of the center information display is disturbing your awareness and ability to concentrate on driving, stop the vehicle in a safe place before performing operations on the display. Also, do not concentrate on the display while driving. Doing so could result in an accident.

■ Features

All information is displayed on the center information display, including vehicle settings, vehicle status, and audio operation.

Items	Page
Maintenance information	175
Vehicle settings	165
Rear view camera	266
Audio/telephone	Refer to the separate audio Owner's Manual.
EyeSight	Refer to the Owner's Manual supplement for the EyeSight system.

The center information display can also be used to set and initialize the center information display itself.

NOTE

- **When the vehicle is in motion, certain functions and selections may not be available.**
- **The language and units for both the center information display and the combination meter display (color TFT) can be changed. For details, refer to "Car settings" ☞P169.**
- **The images displayed in this Owner's Manual are sample images. The actual image may vary depending on the region and vehicle specifications.**

■ Touch Screen Operations

The center information display has a touch screen. Operations are performed by touching the touch screen directly.

▼ Touch

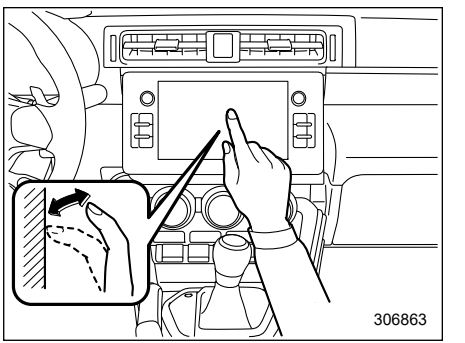

Quickly touch and release once.

▼ **Drag**

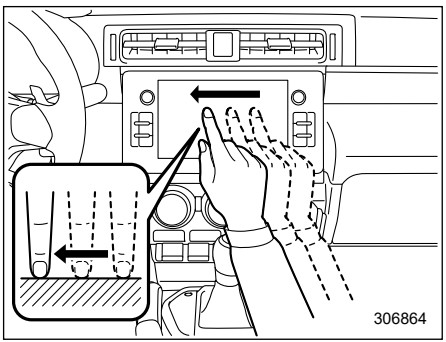

Touch the screen and move the screen to the desired position.

▼ **Swipe**

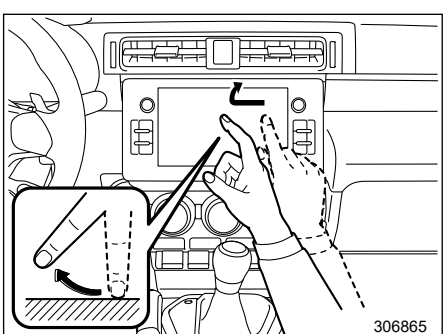

Quickly move the screen by swiping with your finger.

NOTE

Swipe operations may not be performed smoothly in high altitudes.

■ Main Screen

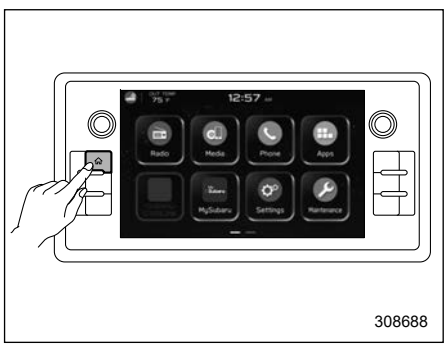

To display the main screen, press ⌂ (HOME).

In this Owner's Manual, the following settings will be explained. For details about other items, refer to the separate audio Owner's Manual.

– "Settings"→"General"
– "Settings"→"Car"
– (Car settings icon)

▼ **General settings**

Set the time and display general items.

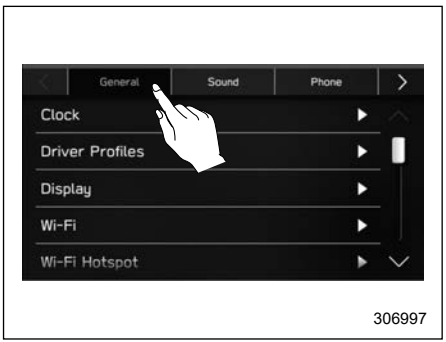

1. Press ⌂ (HOME).
2. →⚙ (Settings)
3. →"General"
4. Select the preferred menu.

– CONTINUED –

The setting adjustments to the following items can be manually changed to meet your personal requirements.

Item			Available settings	Page reference for the vehicle system operation	Page reference for the setting procedure
1st menu	**2nd menu**	**3rd menu**			
General	Clock	Time Setting *1	Auto/Manual	176	176
		Time Setting *2	Sync With Phone/Manual		176
		Clock Format	12H/24H		174
	Driver Profiles	—	Default/4 users	*3	—
	Display	Display Off	Turn the screen off.	—	174
		Brightness Dial	ON/OFF	134	174
		Brightness/Contrast	Set and adjust the brightness and contrast of the display.	174	174
	Wi-Fi	Wi-Fi	ON/OFF	*3	—
		Connected to:	Select the registered devise.		
		Available Wi-Fi Networks	Add		
		Wi-Fi Protected Setup	PIN Setup/Push Button Setup		
		Registered Wi-Fi Networks	—		
	Wi-Fi Hotspot	Wi-Fi Hotspot	ON/OFF	*4	—
		Wi-Fi name (SSID):	—		
		Security Type:	—		
		Password:	—		
		Broadcast Frequency:	2.4 GHz/5 GHz		
		SSID Broadcast	ON/OFF		
		Connected Devices:	—		

Item			Available settings	Page reference for the vehicle system operation	Page reference for the setting procedure
1st menu	2nd menu	3rd menu			
General	Reminder Screen	Maintenance	ON/OFF	—	174
		Birthday	ON/OFF		174
		Anniversary	ON/OFF		174
	Meter Screen	Startup Screen	ON/OFF	131	174
		Gear Shift Indicator (MT models)	ON/OFF	239	174
		Meter Rev. Indicator	Indicator/RPM/Buzzer	134	161
	Camera	Rear Camera Delay Control	ON/OFF	267	174
		Steering Angle Lines	ON/OFF	268	174
	Language	—	English/Français/Español	155 and 164	174
	Home Screen Shortcuts	—	ON/OFF	*3	174
	Birthday List	—	Set a birthday.	—	174
	Anniversary List	—	Set an anniversary day.	—	175
	Software Update	Update	Check if a new software update	—	—
		Automatically Check for Updates	ON/OFF		
		Automatically Download Updates	ON/OFF		
	Factory Data Reset	—	Reset/Cancel		
	System Information	—	—		
	Free/Open Source Software Information	—	—		
	Location Services*5*6	Location Services	ON/OFF	178	174

– CONTINUED –

*1: Models with SUBARU STARLINK Safety and Security
*2: Models without SUBARU STARLINK Safety and Security
*3: For details about the audio system, refer to the Owner's Manual supplement for the audio system.
*4: For details, refer to the Owner's Manual supplement for SUBARU STARLINK Safety and Security.
*5: If equipped
*6: Displayed when you are subscribed to SUBARU STARLINK Safety and Security. For subscription information, refer to the Owner's Manual supplement for SUBARU STARLINK Safety and Security.

NOTE

Touch ⓘ to display the explanation of the items.

▼ Car settings

Perform the EyeSight system setting and vehicle setting.

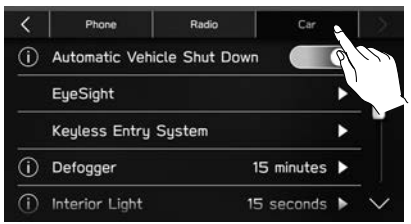

1. Press ⌂ (HOME).
2. →⚙ (Settings)
3. →“Car”
4. Select the preferred menu.

– CONTINUED –

The setting adjustments to the following items can be manually changed to meet your personal requirements.

Item			Available settings	Page reference for the vehicle system operation	Page reference for the setting procedure
1st menu	2nd menu	3rd menu			
Car	Automatic Vehicle Shut Down	—	ON/OFF	236	174
	EyeSight	Pre-Collision Braking	Setting ON/Setting OFF	*2	—
		Forward Collision Warning	Far/Normal/Near		
		Lane Departure Warning	ON/OFF		
		Cruise Control Acceleration Characteristics	Lv.1 (Eco)/Lv.2 (Comfort)/Lv.3 (Standard)/Lv.4 (Dynamic)		
		Lead Vehicle Acquisition Sound	ON/OFF		
		Lead Vehicle Moving Monitor	ON/OFF		
		Select Drive on Left/Drive on Right	Right Lane/Left Lane		
	Sonar Audible Alarm *1	—	ON/OFF	289	174
	Reverse Automatic Braking *1	—	ON/OFF	280	174
	Keyless Entry System	Audible Signal *1	ON/OFF	107 and 112	174
		Hazard Warning Flasher	ON/OFF	108 and 112	174
		Driver Door Unlock *1	Driver Door Only/All	102	174
	Defogger	—	15 minutes/Continuous	189	174
	Interior Light	—	7.5 seconds/15 seconds/30 seconds	216	174

Item			Available settings	Page reference for the vehicle system operation	Page reference for the setting procedure
1st menu	2nd menu	3rd menu			
Car	Auto Light Sensor	Light Sensitivity	Min/Low/Mid/High/Max	178	174
		Wiper Link	ON/OFF	179	174
	Welcome Lighting	Approaching Time Set	30 seconds/60 seconds/90 seconds/OFF	179	174
		Leaving Time Set	30 seconds/60 seconds/90 seconds/OFF		174
	One-Touch Lane Changer	—	ON/OFF	186	174
	BSD/RCTA *1	—	ON/OFF	277	174
	Steering Responsive Headlights (SRH) *1	—	ON/OFF	184	174
	Warning Volume *1	—	Min/Mid/Max	275, 287 and *2	174
	Units	—	km, km/h, Liter/ Miles, MPH, Gallon	131 and 155	174

*1: If equipped
*2: For details about EyeSight system, refer to the Owner's Manual supplement for the EyeSight system.

NOTE

Touch ⓘ to display the explanation of the items.

– CONTINUED –

▼ Car settings icon

Touch to display the items that are changeable while driving.



308690

Item		Available settings	Page reference for the vehicle system operation	Page reference for the setting procedure
1st menu	2nd menu			
Vehicle Control	Cruise Control Acceleration Characteristics	Lv.1 (Eco)/Lv.2 (Comfort)/Lv.3 (Standard)/Lv.4 (Dynamic)	*2	—
	Steering Responsive Headlights (SRH) *1	ON/OFF	184	174
Driving Assistance	Pre-Collision Braking	Setting ON/Setting OFF	*2	—
	Forward Collision Warning	Far/Normal/Near		
	Lane Departure Warning	ON/OFF		
	BSD/RCTA *1	ON/OFF	270	174
Others	Warning Volume *1	Min/Mid/Max	280 and *2	—
	Units	km, km/h, Liter/Miles, MPH, Gallon	131 and 155	174

*1: If equipped
*2: For details about EyeSight system, refer to the Owner's Manual supplement for the EyeSight system.

– CONTINUED –

▼ How to select items on the screen

▽ ON/OFF setting

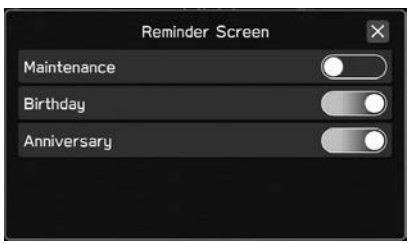

Example

Touch the changing menu and select ON or OFF .

▽ Selecting



Example

Touch the preferred item.

▼ How to set items on the screen

▽ Brightness/Contrast

Set and adjust the brightness and contrast of the center information display.

NOTE

"Brightness" can only be adjusted when "Brightness Dial" is off. Refer to "General settings" ☞P165.

1. Press ⌂ (HOME).
2. →⚙ (Settings)
3. →"General"
4. →"Display"
5. →"Brightness/Contrast"

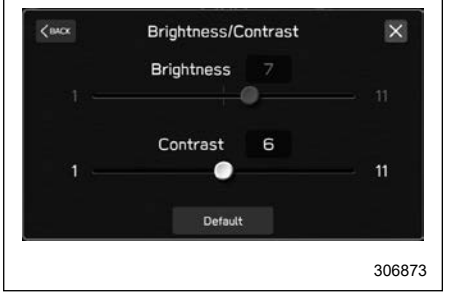

6. Drag ● to adjust the brightness and contrast.

Touch "Default" to revert to the factory setting.

▽ Birthday List

If a birthday or anniversary is approaching, a message will be shown when the ignition switch is turned to the "ON" position. This function can be set to on or off by "Reminder screen". For details, refer to "General settings" ☞P165

1. Press ⌂ (HOME).
2. →⚙ (Settings)
3. →"General"
4. →"Birthday List"



306999

5. →“Add”



307000

6. Enter the name.
7. →“Next”



307001

8. Enter the date.
9. →“OK”

NOTE

A maximum of 5 birthdays can be stored.

▽ Anniversary List

The procedure for setting an anniversary is the same as "Birthday List" ☞P174, except that in step 4 “Anniversary List” is selected.

▼ Maintenance

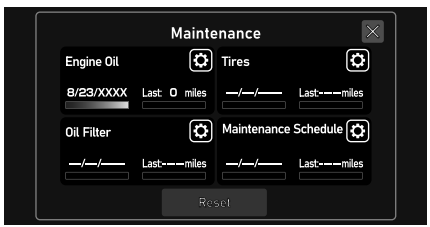

307784

Maintenance reminders can be set.

Engine oil setting:

1. Touch (Maintenance).
2. →(Engine Oil)
3. Select “Notification Date” or “Notification Distance” of the reminder.
4. →“Set”
5. →

Oil Filter setting:

The setting procedure is the same as “Engine Oil” setting, but touch the “Oil Filter” item in step 2.

Tires setting:

The setting procedure is the same as “Engine Oil” setting, but touch the “Tires” item in step 2.

– CONTINUED –

Maintenance Schedule setting:

The setting procedure is the same as “Engine Oil” setting, but touch the “Maintenance Schedule” item in step 2.

NOTE

- **Touch “Reset” to reset each setting.**
- **Touch “Update” to revert to the default value.**

3-9. Clock

For models with a genuine SUBARU audio system, the clock can be adjusted using either auto mode or manual mode.

■ Setting the Clock Manually

1. Turn the ignition switch to the “ON” position.



308689

2. Press ⌂ (HOME).
3. Touch ⚙ (Settings).
4. →“General”
5. →“Time Setting”



306875

7. →“Manual”
8. →∧ or ∨
9. →“OK”

NOTE

The clock setting screen can also be displayed by touching the clock on the status bar.

■ Setting the Clock Automatically

1. Turn the ignition switch to the “ON” position.

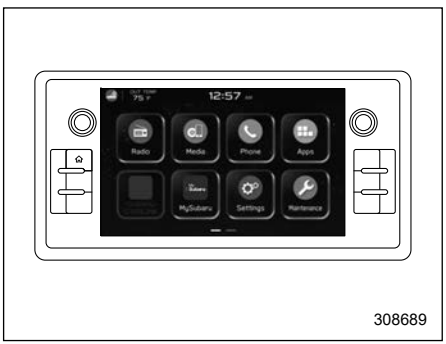

308689

2. Press ⌂ (HOME).
3. Touch ⚙ (Settings).
4. →“General”
5. →“Clock”
6. →“Time Setting”

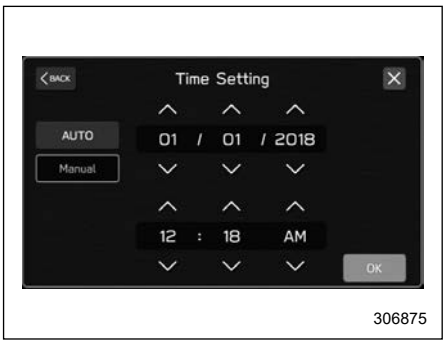

306875

7. Models with SUBARU STARLINK Safety and Security:
→“AUTO”
Models without SUBARU STARLINK Safety and Security:
→“Sync With Phone”

▼ Models without SUBARU STARLINK Safety and Security

The clock will be set and adjusted automatically when a smartphone is connected via Bluetooth® for transferring phonebook data.

1. Register the smartphone to the audio system. For details, refer to “Bluetooth SETTINGS” in the supplemental Owner’s Manual for the audio system.
2. Transfer phonebook data to the system. For details, refer to “Bluetooth SETTINGS” in the supplemental Owner’s Manual for the audio system. The clock will be adjusted automatically.

NOTE

For models without SUBARU STARLINK Safety and Security: Depending on the model of smartphone, the settings of the connected smartphone may need to be changed. (ex: For iOS or other models, notification settings may need to be activated.) For details, check the instructions on connecting smartphones.

▼ Models with SUBARU STARLINK Safety and Security

The clock will be set automatically where a DCM (Data Communication Module in vehicle cellular connection) signal is available.

3-10. Location Services (If Equipped)

You can turn “Location Services” on or off. For details, refer to “General settings”.

To learn more about this feature, select “Location Services” on the center information display, and then touch <i> to display the details. For additional information, visit the Subaru web page for your region.

U.S.

https://www.subaru.com/support/privacy-policies/vehicle-privacy-notice.html

Canada

English:

https://www.subaru.ca/privacy#connectedservices

French:

https://www.subaru.ca/confidentialité#servicesconnectés

NOTE

You can change the settings if you are subscribed to SUBARU STARLINK Safety and Security. For subscription information, refer to the Owner's Manual supplement for SUBARU STARLINK Safety and Security.

3-11. Light Control Switch

⚠ CAUTION

- **Use of any lights for a long period of time while the engine is not running can cause the battery to discharge.**
- **Before leaving the vehicle, make sure that the light control switch is turned to the off position. If the vehicle is left unattended for a long time with the light control switch set to a position other than the off position, even though the lights will turn off after 20 minutes, the battery may be discharged.**

The light control switch operates when the push-button ignition switch is in the “ACC” or “ON” position.

Regardless of the position of the light control switch, the illuminated lights are turned off when the push-button ignition switch is turned off.

NOTE

The light control switch can be operated (except AUTO position), even the push-button ignition switch is turned off.

If the driver’s door is opened while the headlights are illuminated under such conditions, a chirp sound will inform the driver that the lights are illuminated.

■ Headlights

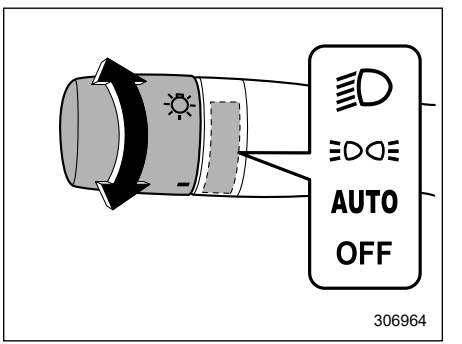

To turn on the headlights, turn the knob on the end of the light control switch.

“OFF” position:

The headlights are all off.*1,*2

*1: For Canada models, when the light switch is switched to the “OFF” position while the vehicle is stopped, the lights turn off. Then the light switch will automatically return to the “AUTO” position.

*2: For Canada models, the headlights will automatically change to the AUTO mode when the following conditions are met:

- The engine is running.

- The parking brake is fully released.
- For AT models, the select lever is in a position other than “P” position.

“” **position:**

Instrument panel illumination, headlights, parking lights, side marker lights, tail lights and license plate lights are on.

“” **position:**

Instrument panel illumination, parking lights, side marker lights, tail lights and license plate lights are on.

“AUTO” position: auto on/off headlights

When the ignition switch is in the “ON” position, the instrument panel illumination, headlights, parking lights, side marker lights, tail lights and license plate lights are **automatically on or off** depending on the level of the ambient light.

The light sensitivity of the auto on/off headlights can be changed by operating the combination meter display (color TFT) or the center information display. For details, refer to "Settings Display" ☞P161 or "Car settings" ☞P169. Also, the setting can be changed by a SUBARU dealer. Consult your SUBARU dealer for details.

▼ Battery-saving function

If the headlights or tail lights are illuminated when the push-button ignition switch is off, in order to prevent the battery from becoming discharged, the lights will automatically be turned off after approximately 20 minutes.

If a door is opened or closed, the battery saving function will temporarily be canceled and the lights will automatically be turned off after approximately 20 minutes.

▼ Auto-on/off wiper-linked headlights

While the light control switch is in the “AUTO” position, the headlights will automatically turn on when the windshield wipers operate several times. The headlights will automatically turn off approximately 1 minute after the wiper stops.

The ON/OFF setting of this function can be changed by operating the combination meter display (color TFT) or the center information display. For details, refer to "Settings Display" ☞P161 or "Car settings" ☞P169. Also, the setting can be changed by a SUBARU dealer. Consult your SUBARU dealer for details.

▼ Welcome lighting function

The welcome lighting function turns on the low beam headlight for smooth approaching to or exiting from the vehicle at night or in a dark place.

The function is activated while all of the following conditions are met.

- The light control switch is in the “AUTO” position
- It is dark enough to turn on the auto on/off headlights

NOTE

If the engine is turned off after turning off the light switch, the welcome lighting function may not operate (for Canada models).

▽ When approaching

While the welcome lighting function is activated, the low beam headlights will automatically illuminate when unlocking the doors by using the remote keyless entry system.

The low beam headlights will remain illuminated for 30 seconds[*1] and then turn off. However, if any of the following operations is done, the low beam headlights will turn off.

- The ignition switch is turned to the “ON” position.
- The doors are locked.
- The light control switch is turned to a position other than “AUTO”.

– CONTINUED –

▽ **When exiting**

While the welcome lighting function is activated, the low beam headlights will remain illuminated even when the push-button ignition switch is turned to the “OFF” status.

The low beam headlights will turn off under any of the following conditions.

- 30 seconds have passed since the door is opened and closed.*1
- The light control switch is turned to a position other than “AUTO”.
- The locking procedure is performed twice. When performing the unlocking procedure after performing the locking procedure, perform the locking procedure twice again.

*1: The setting for the period of time in which the low beam headlights remain on by the welcome lighting function can be changed by a SUBARU dealer. Contact your SUBARU dealer for details. Also, you can change the setting by operating the combination meter display (color TFT) or the center information display. For details, refer to "Settings Display" ☞P161 or "Car settings" ☞P169.

▼ **Sensor for the auto on/off headlights**

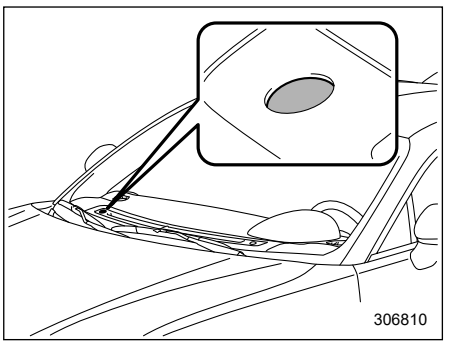

The sensor is on the instrument panel as shown in the illustration.

⚠ CAUTION

If any object is placed on or near the sensor, the sensor may not detect the level of the ambient light correctly and the auto on/off headlights may not operate properly.

NOTE

• If the light control switch is in the “AUTO” position and the headlights do not turn on when it becomes dark outside, turn the light switch to “” position. If this happens, have your vehicle inspected by your SUBARU dealer as soon as possible.

• The light sensor may not operate correctly for light other than sunlight.

■ High/Low Beam Change (Dimmer)

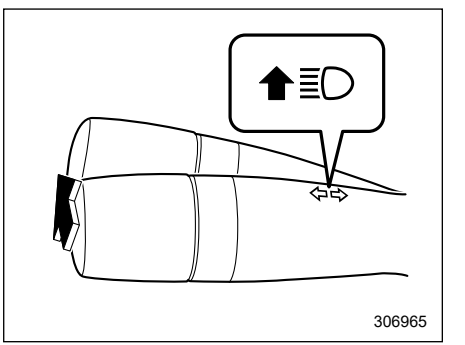

While the light control switch is in the “” or “AUTO” position in a dark place, the headlights will turn on.

Pushing the lever forward and releasing it will activate the high beam. Pulling the lever rearward and releasing it will switch the headlights to low beam.

For a vehicle with High Beam Assist operational, when the light control switch is in the “AUTO” position, pushing the lever forward turns the High Beam Assist is on.

Refer to "High Beam Assist Function" ☞P181.

When the headlights are on high beam, the high beam indicator light "≣D" on the combination meter is also on.

■ Headlight Flasher

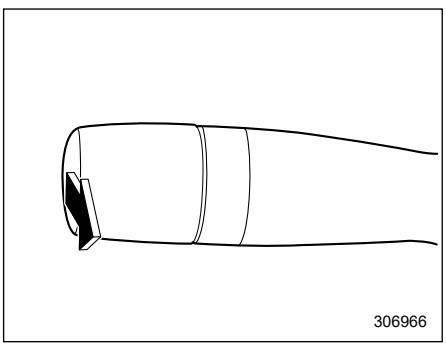

⚠ CAUTION

Do not hold the lever in the flashing position for more than just a few seconds.

To flash the headlights, pull the lever toward you and then release it. The high beam will stay on for as long as you hold the lever. The headlight flasher works even though the lighting switch is in the off position.

When the headlights are on high beam, the high beam indicator light "≣D" on the combination meter also illuminates.

■ High Beam Assist Function

NOTE

- **The high beam assist function utilizes the stereo camera installed at the position of the upper side of windshield.**
- **For details on how to handle the stereo camera, refer to the Owner's Manual supplement for the EyeSight system.**

The high beam assist function automatically changes the headlight from high beam to low beam (or vice versa).

When all of the following conditions are met, the headlight will change to high beam.

- When the vehicle speed increases to or above 20 mph (32 km/h).
- There is no preceding or oncoming vehicle.
- The forward area of the vehicle is dark.
- The road does not have a sharp curve.

When any of the following conditions are met, the headlight will change to low beam.

- When the vehicle speed decreases to or below 10 mph (16 km/h).
- When the forward area of the vehicle is bright.
- When there is a preceding or oncoming vehicle.
- When the EyeSight system is malfunctioning or is temporarily stopped.

NOTE

- **Do not overestimate the capacity of the high beam assist function. The driver always has the responsibility to understand the surrounding situation, to drive safely, and to change the headlight mode manually if necessary.**
- **The factory setting (default setting) for this function is set as "operational". This setting can be changed to OFF (non-operation) at SUBARU dealers. For more details, contact a SUBARU dealer.**

▼ How to use the high beam assist function

The high beam assist function will be activated when all the following conditions are met.

- The light control switch is in the "AUTO" position and the low beam headlights are on automatically.
- The turn signal lever is pushed forward.

– CONTINUED –

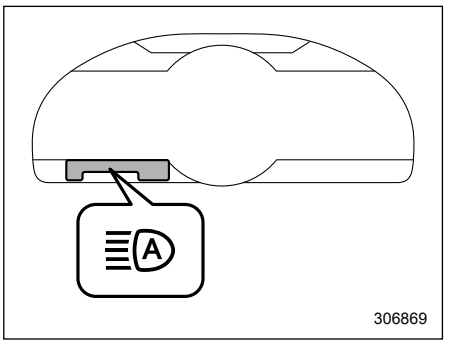

High beam assist indicator

When the high beam assist function is activated, the high beam assist indicator on the combination meter will illuminate.

NOTE

If the high beam assist function is malfunctioning or is temporarily stopped, the headlight will be fixed at low beam.

▼ How to temporarily lower the sensitivity of the high beam assist function

The sensitivity of the high beam assist function can be lowered by using the following operations.

1. After turning the ignition switch to the "ON" position, set the light control switch to the "AUTO" position and push the signal lever forward (high beam position).
2. After the high beam assist indicator on the combination meter will illuminate, turn the ignition switch to the "OFF" position.
3. Turn the ignition switch to the "ON" position and within approximately 15 seconds, press the "" (following distance setting) switch more than 10 times consecutively.

When the sensitivity of the high beam assist function is lowered, the high beam assist indicator light "" on the combination meter display (color TFT) will flash.

NOTE

• The sensitivity of the high beam assist function cannot be lowered in the following conditions.

- Cruise control indicator is illuminated.

- The EyeSight warning indicator (yellow) is illuminated

• The sensitivity of the high beam assist function returns to normal level the next time the ignition switch is turned to the "OFF" position and the engine is restarted.

▼ How to change the headlight mode manually

Change to the low beam:

- Set the light control switch to "".
- Pull the lever while the high beam is turning on and release it.

Change to the high beam:

Push the lever forward and release it.

At this time, the high beam assist function will turn off, the high beam assist indicator will turn off and the high beam indicator light will turn on.

NOTE

• After manually changing the headlight mode to the high beam, if you turn on the high beam assist function, push the lever forward and release it.

• When manually changing the headlight mode to the high beam, if you turn the light control switch to the "" position, the parking lights, side marker lights, tail lights and license plate lights will turn on.

▼ Tips for the high beam assist system

• The high beam assist function recognizes the condition surrounding the vehicle based on the brightness of illumination ahead of your vehicle, etc. There-

fore, the headlight mode may switch in some situations that do not match to the driver's sense.

- A bicycle or cargo cycle may not be detected.
- Under the following situations, the brightness of ambient illumination may not be detected correctly and the high beam assist function may not work properly. As a result, the glare of the high beam may disturb the oncoming vehicle or vehicle ahead. Also, the low beam mode may continue although there are no oncoming vehicles and vehicles ahead. In the such cases, change the headlight mode manually.
  - In bad weather (fog, snow, sand storm, heavy rain, etc.).
  - When the windshield glass is dirty or fogged.
  - When the windshield is cracked or damaged.
  - If there are lights similar to the headlights or the tail lights in the surrounding area.
  - When an oncoming vehicle or vehicle ahead is driven without its headlights and tail lights on.
  - If the headlights of an oncoming vehicle or the tail lights of a vehicle ahead are dirty or discolored, or if the light beams are not aimed correctly.
  - When a rapid change of brightness continues while driving.
  - When driving on a road with many ups and downs or uneven surfaces.
  - When driving on a road with many curves.
  - When there are some objects that reflect light strongly, such as a road sign or a mirror in vehicle ahead.
  - When the rear part of the vehicle ahead, such as a container, reflects light strongly.
  - When the headlights of your vehicle are damaged or dirty.
  - When your vehicle is tilted, such as in case the vehicle has a flat tire or is being towed.
  - When the stereo camera is deformed or the stereo camera lenses are dirty.
  - Immediately after the engine has started.
- In the following conditions, the headlight mode will not be automatically changed from the high beam to the low beam.
  - When your vehicle passes an oncoming vehicle suddenly in a blind curve.
  - When another vehicle passes in front of your vehicle.
  - When an oncoming vehicle or vehicle ahead comes in and out of view because of continuous curves, median strips, roadside trees, etc.
- If the stereo camera detects the light of the front fog lights of an oncoming vehicle, the headlight mode may change from the high beam to the low beam automatically.
- The headlight mode may change from the high beam to the low beam, or the low beam mode may continue, when affected by a street light, traffic signal, illumination of an advertisement board, or a reflective object such as a road sign and signboard.
- The timing of the change of headlight mode may differ due to the following factors.
  - Color or brightness of the headlights of an oncoming vehicle or the tail lights of a vehicle ahead.
  - The headlights of the oncoming vehicle or the tail lights of the vehicle ahead are covered with mud, snow, etc.
  - Movement and direction of an oncoming vehicle or a vehicle ahead.
  - When the headlights of an oncoming vehicle or the tail lights of a vehicle ahead illuminate on only one side.
  - When the oncoming vehicle or vehicle ahead is a motorcycle.
  - Conditions of a road (slope, curve, road surface, etc.).

– CONTINUED –

- Number of passengers and weight of loaded cargo.
- Limitation of the detection ability of the stereo camera.

■ Daytime Running Light System

⚠ WARNING

When the daytime running lights are illuminated, the tail lights do not illuminate. When it becomes dark outside, turn the light switch to the "≡D" position to illuminate the headlights and tail lights. This will improve visibility and allow other drivers to see your vehicle more easily.

The daytime running lights will automatically illuminate when the following conditions are fulfilled.

- The engine is running.
- The parking brake is fully released.
- The light control switch is in the "AUTO", "≡DC≡" or "OFF" position.
- For AT models, the select lever is in a position other than the "P" position.

NOTE

- **When the light switch is in the "≡DC≡" position, the instrument panel illumination, side marker lights, tail lights and license plate lights are also illuminated.**
- **While the headlight switch is in the "AUTO" position and the headlights turn on automatically, the daytime running light is deactivated.**
- **When the turn signal indicators are flashing, the daytime running light on the side that the turn signals are flashing will turn off.**

3-12. Steering Responsive Headlight (SRH) (If Equipped)

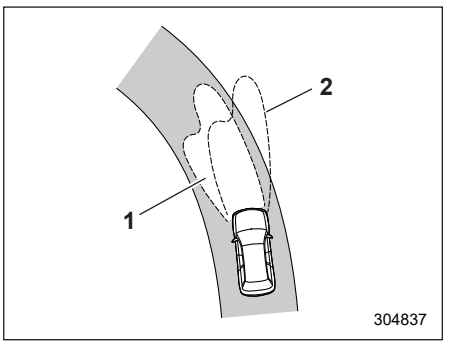

1) The target area of illumination when SRH is activated
2) The target area of illumination when SRH is not activated

SRH is a function that automatically moves the headlight beam to the left or right in accordance with the steering angle. This function helps to improve the visibility at night by illuminating the road ahead at corners and intersections.

You can turn the SRH function on or off. The settings can be changed by using the combination meter display (color TFT) or center information display. For details,

refer to "Driving Support System Settings Display" ☞P161, "Car settings" ☞P169

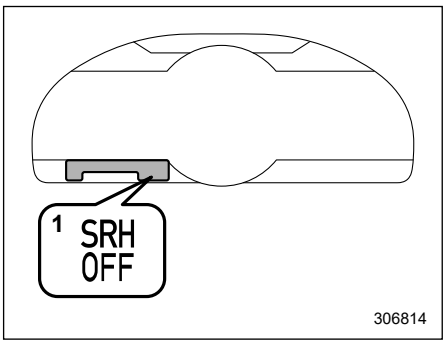

1) SRH OFF indicator

The SRH OFF indicator on the combination meter display (color TFT) turns off when SRH is turned on.

The SRH OFF indicator on the combination meter display (color TFT) illuminates when SRH is turned off.

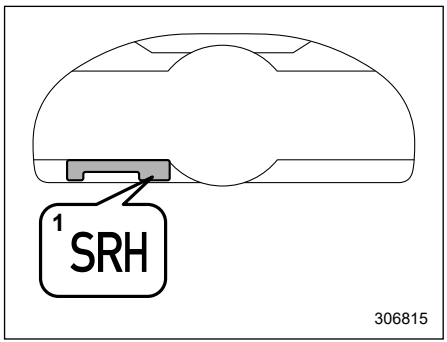

1) SRH warning indicator

If SRH is malfunctioning, the SRH warning indicator on the combination meter display (color TFT) illuminates and a message appears on the warning screen when the ignition switch is in the “ON” position. It indicates that SRH has been deactivated. Contact a SUBARU dealer for an inspection.

NOTE

- **The SRH function operative/non-operative status is kept when the engine is turned off, even if the engine is restarted.**
- **When you turn the ignition switch to the “ON” position, the SRH OFF indicator will illuminate and turn off after several seconds.**
- **SRH only activates when the vehicle is traveling forward at the speed of approximately 5 mph (8 km/h) or more.**

3-13. Headlight Beam Leveler

The LED headlights produce more light than conventional halogen headlights.

When the vehicle is carrying a heavy load and the headlight beams are angled upwards, the driver of an oncoming vehicle may experience glare.

To prevent this, the automatic headlight beam leveler adjusts the headlights to the optimum height automatically depending on the load the vehicle is carrying.

⚠ CAUTION

In certain circumstances, the headlights may become misaligned, and the headlight beam leveler will not reset them to the proper angle. This may occur after transporting your vehicle on a flat-bed truck, or if the vehicle is parked and restarted on different angles. In such cases, have the headlight alignment checked by a SUBARU dealer.

3-14. Turn Signal Lever

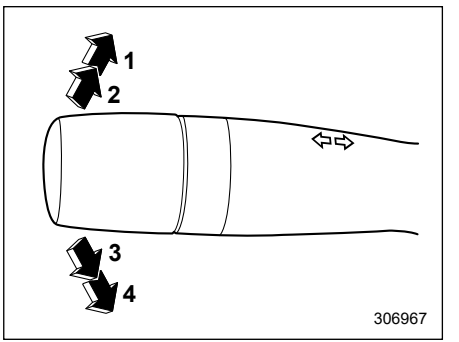

1) Right turn
2) Lane change right signal
3) Lane change left signal
4) Left turn

If the lever does not return after cornering, return the lever to the neutral position by hand.

To signal a lane change, push the turn signal lever up or down slightly and hold it during the lane change. The lever will return automatically to the neutral position when you release it.

■ One-Touch Lane Changer

To flash the turn signal and turn signal indicator light three times, push the turn signal lever up or down slightly and immediately release it.

NOTE

The operational/non-operational setting of the one-touch lane changer can be changed by a SUBARU dealer. Contact the nearest SUBARU dealer for details. The setting can also be changed by operating the center information display. For details, refer to "Car settings" ☞P169

3-15. Wiper and Washer

⚠ WARNING

In freezing weather, do not use the windshield washer until the windshield is sufficiently warmed by the defroster.

Otherwise the washer fluid can freeze on the windshield, blocking your view.

⚠ CAUTION

- **Do not operate the washer continuously for more than 10 seconds, or when the washer fluid tank is empty. This may cause overheating of the washer motor. Check the washer fluid level frequently, such as at fuel stops.**
- **Do not operate the wipers when the windshield is dry. This may scratch the glass, damage the blade rubbers and cause the wiper motor to burn out. Before operating the wiper on a dry windshield always use the windshield washer.**
- **In freezing weather, be sure that the blade rubbers are not frozen to the windshield before switching on the wipers. Attempting to operate the wiper with the blade rubbers frozen to the window glass could cause not only the blade rubbers to be damaged but also might cause the wiper motor to fail. If the blade rubbers are frozen to the window glass, be sure to operate the defroster before turning on the wiper.**
- **If the wipers stop during operation because of ice or some other obstruction on the window, this might cause the wiper motor to fail even if the wiper switch is turned off. If this occurs, promptly stop the vehicle in a safe location, turn the ignition switch to the "OFF" position and clean the window glass to allow proper wiper operation.**
- **Use clean water if windshield washer fluid is unavailable. In areas where water freezes in winter, use SUBARU Windshield Washer Fluid or the equivalent. Refer to "Windshield Washer Fluid" ☞P375.**
  Also, when driving the vehicle when there are freezing temperatures, use non-freezing type wiper blades.
- **Do not clean the wiper blades with gasoline or a solvent, such as paint thinner or benzine. This will cause deterioration of the wiper blades.**

NOTE

• The windshield wiper motor is protected against overloads by a circuit breaker. If the motor operates continuously under an unusually heavy load, the circuit breaker may trip to stop the motor temporarily. If this happens, park your vehicle in a safe location, turn off the wiper switch, and wait for approximately 10 minutes. The circuit breaker will reset itself, and the wipers will again operate normally.
• Clean your blade rubbers and window glass periodically with a washer solution to prevent streaking,

– CONTINUED –

and to remove accumulations of road salt or road film. Operate the windshield washer for at least 1 second so that washer solution will be sprinkled all over the windshield.

• Grease, wax, insects, or other material on the windshield or the wiper blade results in jerky wiper operation and streaking on the glass. If you cannot remove the streaks after operating the windshield washer or if the wiper operation is jerky, clean the outer surface of the windshield using a sponge or soft cloth with a neutral detergent or mild-abrasive cleaner. Do not, however, use detergent to clean the blade rubbers. Use only a sponge or soft cloth (and no neutral detergent or mild abrasive cleaner) when you clean the blade rubbers. If you wipe the rubber of the blade strongly, the black coating component will peel off, which will cause the wiper to judder. Also, after wiping it off, check that the rubber has not come loose. After cleaning the window glass and wiper blade rubbers, be sure to rinse them with clean water. Rinse the window until the water does not form beads on the glass. This indicates that the glass is clean.

• If you cannot eliminate the streaking even after following this procedure, replace the wiper blades (or blade rubbers) with new ones. For replacement instructions, refer to "Replacement of Wiper Blades" ☞P376.

• If the wipers do not operate in the following conditions, turn the wiper switch to the "▼▼" position.

- The wiper switch is in the "▽" position, however, it does not work.

- The wiper switch is in the "▼" position, however, it does not work.

In these cases, contact your SUBARU dealer.

■ Windshield Wiper and Washer Switches

The wiper operates only when the ignition switch is in the "ON" position.

▼ Windshield wipers

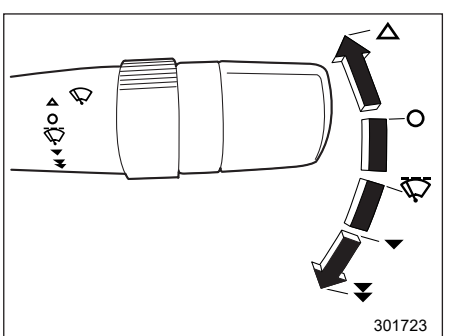

△ : Mist (for a single wipe)
○ : Off
▽ : Intermittent
▼ : Low speed
▼▼ : High speed

To turn the wipers on, push the wiper control lever down.

To turn the wipers off, return the lever to the "○" position.

For a single wipe of the wipers, push the lever up. The wipers operate until you release the lever.

▼ Wiper intermittent time control

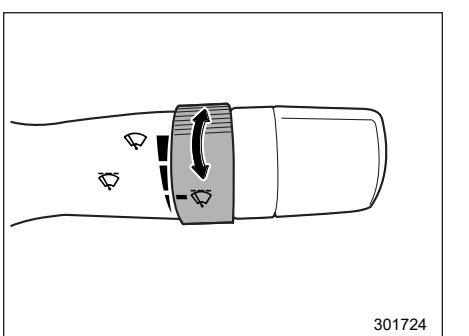

When the wiper switch is in the "▽" position, turn the dial to adjust the operating interval of the wiper. The operating

interval can be adjusted in several steps from the shortest interval to the longest.

▼ **Windshield washer**

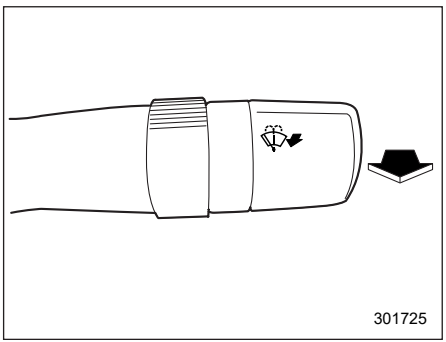

To wash the windshield, pull the wiper control lever toward you. The washer fluid sprays until you release the lever. The wipers operate while you pull the lever.

3-16. Defogger

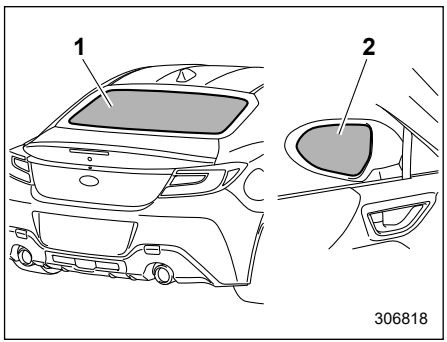

1) Rear window defogger
2) Outside mirror defogger

The defogger system is activated only when the ignition switch is in the “ON” position.

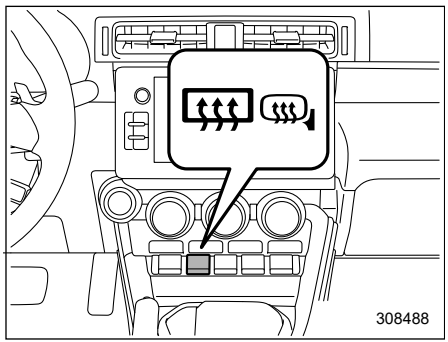

Rear window and outside mirror defogger button

To activate the defogger system, press the rear window and outside mirror defogger button. The rear window defogger and outside mirror defogger are activated simultaneously. The indicator light on the button illuminates while the defogger system is activated.

To turn them off, press the button again. They also turn off when the ignition switch is turned to the “ACC” or “OFF” position.

The defogger system will automatically shut off after approximately 15 minutes. If the rear window and outside mirrors have been cleared before that time, press the button to turn them off. If defrosting or defogging is not complete, you have to press the button to turn them on again.

– CONTINUED –

It is possible to set the defogger system for the continuous operation mode by operating the center information display. For details, refer to "Car settings" ☞P169.

⚠ CAUTION

- **To prevent the battery from being discharged, do not operate the defogger system continuously for any longer than necessary.**
- **Do not use sharp instruments or window cleaner containing abrasives to clean the inner surface of the rear window. They may damage the conductors printed on the window.**

NOTE

While the defogger system is in the continuous operation mode, if the battery voltage drops below the permissible level, continuous operation of the defogger system is canceled and the system stops operating.

3-17. Mirrors

Always check that the inside and outside mirrors are properly adjusted before you start driving.

■ Inside Mirror

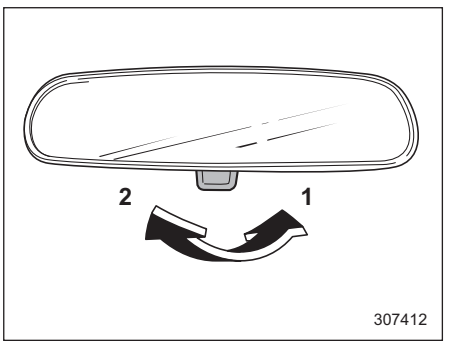

1) Normal position
2) Anti-glare position

Push the tab on the mirror for normal use. To reduce glare from the headlights of the vehicle behind you, pull the tab to the anti-glare position.

■ Auto-Dimming Mirror/ Compass with HomeLink® (Dealer Option)

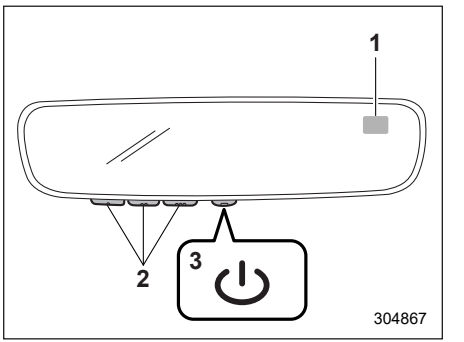

1) Display
2) HomeLink® buttons
3) Switch

During nighttime driving, the auto-dimming feature senses distracting glare from vehicle headlights behind you and automatically dims to eliminate the glare and help preserve your vision.

▼ To Operate the Auto-Dimming Feature

Press the "⏻" switch to turn the auto-dimming feature on/off. The auto-dimming feature is enabled when the switch's green LED indicator is on. The auto-

dimming feature will default to on with each ignition cycle.

▼ To Operate the Compass Feature

1. To turn the compass feature on/off, press and hold the "⏻" switch for more than 3 seconds or until the display turns on/off. The compass feature will default to on with each ignition cycle.
2. If the display reads "C", slowly drive the vehicle in circles until compass is calibrated.

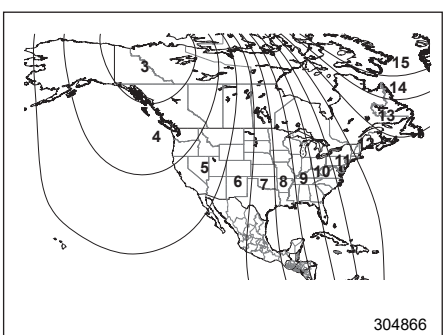

Compass calibration zones

3. To adjust for compass zone variance:
   - Find your current location and zone number on the map.
   - Press and hold the "⏻" switch for more than 6 seconds or until a zone number appears in the display.
   - Once the zone number appears in the display, toggle the "⏻" switch again until your current location zone number appears. After you stop pressing the switch, your new zone number will be saved. Within a few seconds, the display will show a compass direction.
4. If the vehicle's magnetics have changed or if the compass appears inaccurate, recalibrate the compass. Press and hold the "⏻" switch for more than 9 seconds or until a "C" appears in the display. Once a "C" appears in the display, slowly drive the vehicle in circles until compass is calibrated.

▼ HomeLink® Wireless Control System

The HomeLink® Wireless Control System provides a convenient way to replace up to three hand-held radio frequency remotes used to activate devices such as gate operators, garage door openers, entry door locks, security systems, even home lighting. The below steps are generic programming instructions; for Genie and Sommer garage door openers please go directly to the HomeLink® website. Additional information and programming videos can be found at www.HomeLink.com and www.youtube.com/HomeLinkGentex.

⚠ CAUTION

- **Before programming HomeLink® to a garage door opener or gate operator, make sure that people and objects are out of the way of the device to prevent potential harm or damage.**
- **When programming a garage door opener, it is advised to park outside of the garage.**
- **Do not use HomeLink® with any garage door opener that lacks safety stop and reverse features as required by U.S. federal safety standards (this includes any garage door opener model manufactured before April 1, 1982). A garage door that cannot detect an object signaling the door to stop and reverse does not meet current U.S. federal safety standards.**
- **It is also recommended that a new battery be placed in the hand-held remote (garage door opener remote) of the device for quicker and more accurate training.**

– CONTINUED –

- **Turn the ignition switch to the "ON" or "ACC" position before programming and/or operating HomeLink®.**
- **Keep the hand-held remote (garage door opener remote) of the device you are programming for use in other vehicles as well as for future HomeLink® programming. It is also suggested that upon the sale of the vehicle, the programmed HomeLink® buttons be erased for security purposes. Refer to "Erasing HomeLink® buttons" ☞P195.**

▽ **Programming a New HomeLink® button**

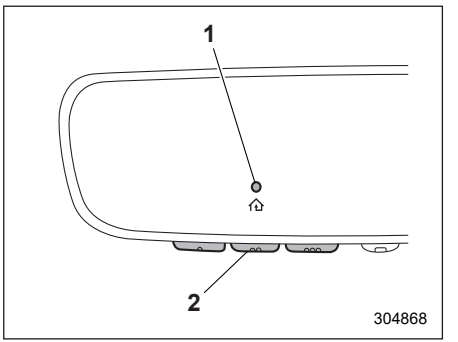

1) Indicator Light
2) HomeLink® buttons

1. Press and release the HomeLink® button that you would like to program. The HomeLink® indicator light will flash orange slowly (if not, refer to "Erasing HomeLink® buttons" ☞P195).

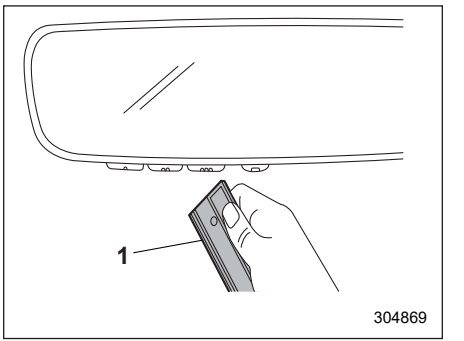

1) Garage door opener remote

2. Position the hand-held remote (garage door opener remote) 1 to 3 inches (2 to 8 cm) away from the HomeLink® button that you would like to program.

NOTE

Some hand-held remotes (garage door opener remotes) may actually train better at a distance of 6 to 12 inches (15 to 30 cm). Keep this in mind if you have difficulty with the programming process.

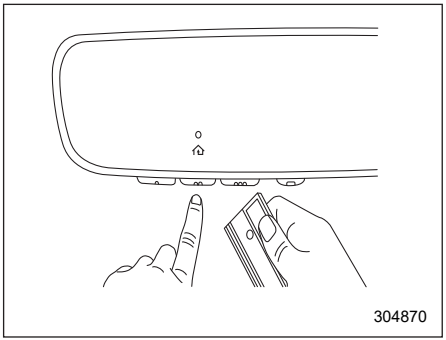

3. While the HomeLink® indicator light is flashing orange, press and hold the hand-held remote button. Continue pressing the hand-held remote button until the HomeLink® indicator light changes from orange to green. You may now release the hand-held remote button.

NOTE

Some devices may require you to replace this "Programming a New HomeLink® button" step 3 with procedures noted in the "Gate Operator / Canadian Programming" section. Refer to "Gate Operator/Canadian Programming" ☞P194.

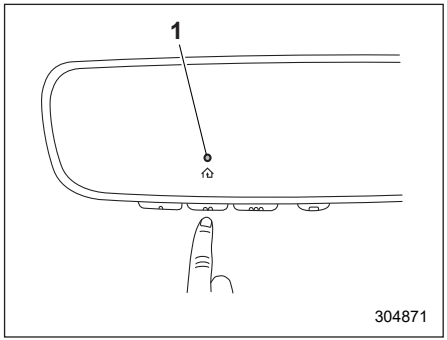

1) Indicator Light

4. Press the HomeLink® button that you would like to program and observe the indicator light.

- If the indicator light remains constant green, your device should operate when the HomeLink® button is pressed. At this point, if your device operates, programming is complete.
- If the indicator light rapidly flashes green, firmly press, hold for two seconds and release the HomeLink® button up to three times to complete the programming process. At this point if your device operates, programming is complete. If the device does not operate, continue with the next step of the programming instructions.

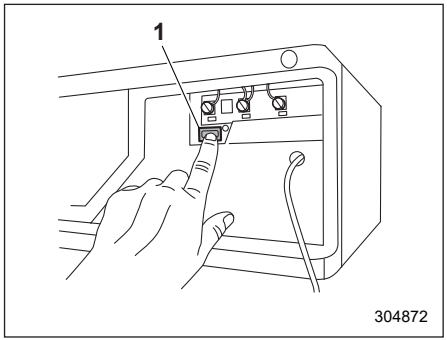

1) "Learn" button

5. At the garage door opener motor, (security gate motor, etc.) locate the "Learn", "Smart", or "Program" button. This can usually be found where the hanging antenna wire is attached to the motor-head unit (see the device's manual to identify this button). The name and color of the button may vary by manufacturer.

NOTE

A ladder and/or second person may simplify the following steps.

6. Firmly press and release the "Learn", "Smart", or "Program" button. You now have 30 seconds in which to complete step 7.

– CONTINUED –

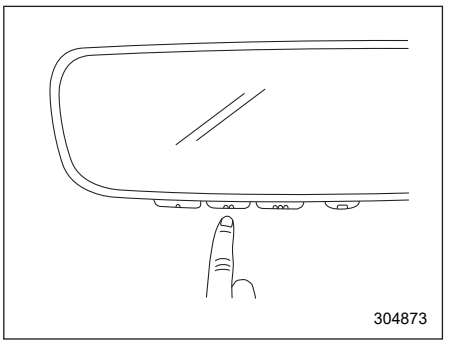

7. Return to the vehicle and firmly press, hold for 2 seconds and release the HomeLink® button up to three times. At this point programming is complete and your device should operate when the HomeLink® button is pressed and released.

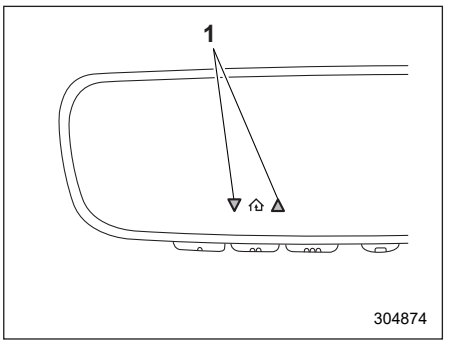

1) Status Indicators

8. If status indicator arrows appear next to the indicator light, please refer to "Garage Door Two-Way Communication" ☞P195.

In the event that there are still programming difficulties or questions, additional HomeLink® information and programming videos can be found at www.HomeLink.com and www.youtube.com/HomeLinkGentex. For Genie and Sommer garage door openers please go directly to the HomeLink® website.

▽ Gate Operator/Canadian Programming

Canadian radio-frequency laws require transmitter remote signals to “time-out” (or quit) after several seconds of transmission, which may not be long enough for HomeLink® to pick up the signal during programming. Similar to this Canadian law, some U.S. gate operators are designed to “time-out” in the same manner. The indicator LED on the hand-held remote will go off when the device times out, indicating that it has finished transmitting.

If you live in Canada or you are having difficulties programming a gate operator or garage door opener by using the programming procedures, replace “Programming a New HomeLink® button” step 3 with the following:

While the HomeLink® indicator light is flashing orange, press and release (“cycle”) your device’s hand-held remote every two seconds until the HomeLink® indicator light changes from orange to green. You may now release the hand-held remote button.

NOTE

If programming a garage door opener or gate operator, it is advised to unplug the device during the “cycling” process to prevent possible overheating.

Proceed with “Programming a New HomeLink® button” step 4 to complete.

▽ Using HomeLink®

To operate, simply press and release the programmed HomeLink® button. Activation will now occur for the trained device (i.e. garage door opener, gate operator, security system, entry door lock, home/office lighting, etc.). For convenience, the hand-held remote of the device may also be used at any time.

▽ Erasing HomeLink® buttons

To erase programming from the three buttons (individual buttons cannot be erased but can be “reprogrammed” as outlined below), follow the step noted:

Press and hold the two outer HomeLink® buttons for at least 10 seconds. The LED indicator will change from continuously lit to rapidly flashing. Release both buttons. Do not hold for longer than 20 seconds. HomeLink® is now ready to be programmed at any time beginning with “Programming a New HomeLink® button”- step 1.

▽ Reprogramming a Single HomeLink® button

To program a previously trained button, follow these steps:

1. Press and hold the desired HomeLink® button. DO NOT release the button.
2. The indicator light will begin to slowly flash orange after 20 seconds. The HomeLink® button can be released at this point. Proceed with “Programming a New HomeLink® button”- step 3.
3. If you do not complete the programming of a new device to the button, it will revert to the previously stored programming.

▽ Garage Door Two-Way Communication

HomeLink® has the capability of communicating with your garage door opener. HomeLink® can receive and display “closing” or “opening” status messages from compatible garage door opener systems. At any time, HomeLink® can also recall and display the last recorded status communicated by the garage door opener to indicate your garage door being “closed” or “opened”.

HomeLink® has the capability of receiving this communication from the garage door opener at a range up to 820 feet (250 m). Range may be reduced by obstacles such as houses or trees. You may have to slow your vehicle speed to successfully receive the garage door opener communication.

▽ Programming Two-Way Communication

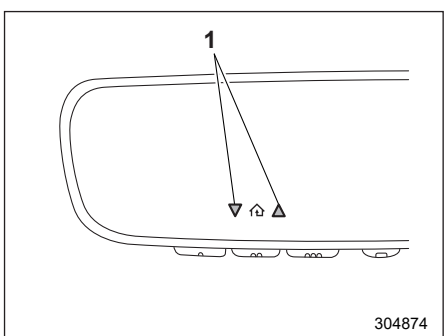

1) Status Indicators

Within 5 seconds after programming a new HomeLink® button, both of HomeLink’s garage door status indicators will flash rapidly green indicating that the garage door two-way communication has been enabled. If your garage door status indicators flashed, two-way communication programming is complete.

– CONTINUED –

If the garage door status indicators do not flash, additional HomeLink® information and programming videos can be found online at www.HomeLink.com and www.youtube.com/HomeLinkGentex.

▽ Using Two-Way Communication

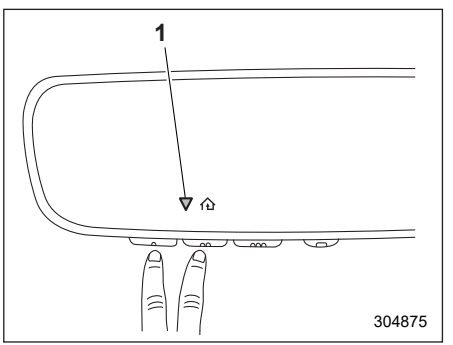

1) Status Indicator

Recall and display (at any time) the last recorded garage door status message communicated to HomeLink® by simultaneously pressing HomeLink® buttons 1 and 2 for 2 seconds. HomeLink® will display the last recorded status for 3 seconds.

If two-way communication programming is successful, HomeLink® will display the status of your garage door opener with arrow indicators (see below).

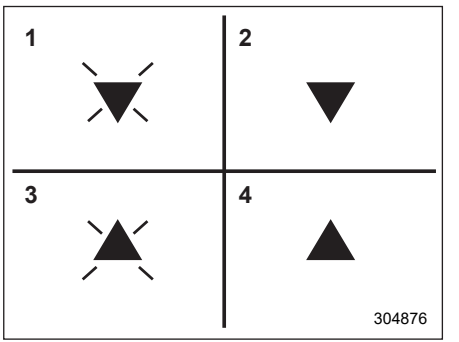

1) Garage Door Opener CLOSING (Blinking Orange)
2) Garage Door Opener CLOSED (Solid Green)
3) Garage Door Opener OPENING (Blinking Orange)
4) Garage Door Opener OPENED (Solid Green)

▽ Certification

In the event that there are still programming difficulties or questions, additional HomeLink® information and programming videos can be found at www.HomeLink.com, www.youtube.com/HomeLinkGentex, or by calling the toll-free HomeLink-hotline at 1-800-355-3515.

- **U.S.-spec. models**

⚠ CAUTION

FCC WARNING

Changes or modifications not expressly approved by the party responsible for compliance could void the user's authority to operate the equipment.

This device complies with FCC rules part 15 and Innovation, Science, and Economic Development Canada RSS-210. Operation is subject to the following two conditions: (1) This device may not cause harmful interference, and (2) This device must accept any interference that may be received including interference that may cause undesired operation. WARNING: The transmitter has been tested and complies with FCC and ISED rules.

Changes or modifications not expressly approved by the party responsible for compliance could void the user's authority to operate the device.

This equipment complies with FCC and ISED radiation exposure limits set forth for an uncontrolled environment. End Users must follow the specific operating instructions for satisfying RF exposure compliance. This transmitter must be at least 20 cm from the user and must not be co-located or operating in conjunction with any other antenna or transmitter.

306210

- **Canada-spec. models**

This device complies with FCC rules part 15 and Innovation, Science, and Economic Development Canada RSS-210. Operation is subject to the following two conditions: (1) This device may not cause harmful interference, and (2) This device must accept any interference that may be received including interference that may cause undesired operation. WARNING: The transmitter has been tested and complies with FCC and ISED rules.

Changes or modifications not expressly approved by the party responsible for compliance could void the user's authority to operate the device.

This equipment complies with FCC and ISED radiation exposure limits set forth for an uncontrolled environment. End Users must follow the specific operating instructions for satisfying RF exposure compliance. This transmitter must be at least 20 cm from the user and must not be co-located or operating in conjunction with any other antenna or transmitter.

306210

Cet appareil est conforme aux règlements de la FCC, section 15, et au CNR-210 d'Innovation, Sciences et Développement économique Canada. Le fonctionnement est assujetti aux deux conditions suivantes : (1) cet appareil ne doit pas causer d'interférences nuisibles et (2) cet appareil doit accepter toute interférence reçue, y compris celle qui pourrait entraîner un dysfonctionnement. MISE EN GARDE : L'émetteur a subi des tests et est conforme aux règlements de la FCC et d'ISDE. Les changements ou modifications non approuvés explicitement par la partie responsable de la conformité pourraient rendre caduque l'autorisation de l'utilisateur de se servir du dispositif.

Cet appareil est conforme aux limites d'exposition aux radiations de la FCC et d'ISDE établies pour un environnement non contrôlé. Les utilisateurs finaux doivent respecter les instructions d'utilisation spécifiques pour satisfaire aux exigences de conformité aux expositions de RF. L'émetteur doit se trouver à 20 cm au minimum de l'utilisateur et ne doit pas être situé au même endroit que tout autre émetteur ou antenne ni fonctionner avec un autre émetteur ou antenne.

306211

HomeLink® and the HomeLink® house are registered trademarks of Gentex Corporation.

– CONTINUED –

⚠ WARNING

- **When programming the HomeLink® Wireless Control System, you may be operating a garage door opener or other device. Make sure that people and objects are out of the way of the garage door or other device to prevent potential harm or damage.**
- **Do not use the HomeLink® Wireless Control System with a garage door opener that lacks the safety stop and reverse feature as required by applicable safety standards. A garage door opener which cannot detect an object, signaling the door to stop and reverse, does not meet these safety standards. Using a garage door opener without these features increases risk of serious injury or death. For more information, consult the HomeLink® website at www.HomeLink.com or call 1-800-355-3515.**

■ Outside Mirrors

▼ Remote control mirror switch

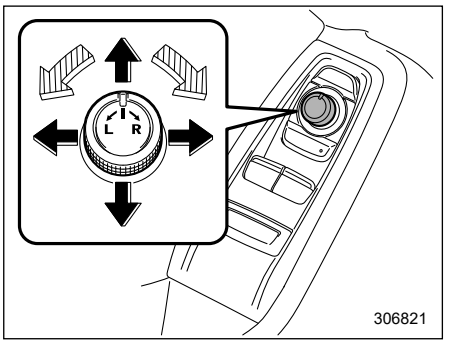

: Select side to adjust

: Direction control

The remote control mirrors operate when the ignition switch is in the “ON” or “ACC” position.

1. Turn the control switch to the side that you want to adjust. “L” is for the left mirror, “R” is for the right mirror.
2. Move the control switch in the direction you want to move the mirror.
3. Return the control switch to the neutral position to prevent unintentional operation.

NOTE

The mirrors can also be adjusted manually.

3-18. Tilt/Telescopic Steering Wheel

⚠ WARNING

- **Do not adjust the steering wheel tilt/telescopic position while driving. This may cause loss of vehicle control and result in personal injury.**
- **If the lever cannot be raised to the fixed position, adjust the steering wheel again. It is dangerous to drive without locking the steering wheel. This may cause loss of vehicle control and result in personal injury.**

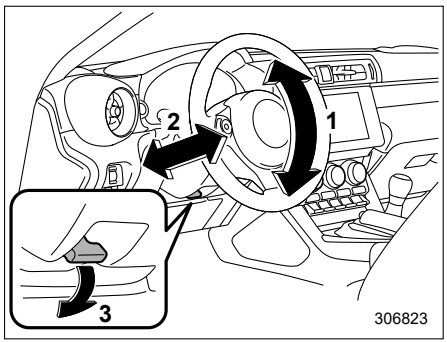

1) Tilt adjustment
2) Telescopic adjustment
3) Tilt/telescopic lock lever

1. Adjust the seat position. Refer to "Front Seats" ☞P32.
2. Pull the tilt/telescopic lock lever down.
3. Move the steering wheel to the desired level.
4. Pull the lever up to lock the steering wheel in place.
5. Make sure that the steering wheel is securely locked by moving it up and down, and forward and backward.

3-19. Horn

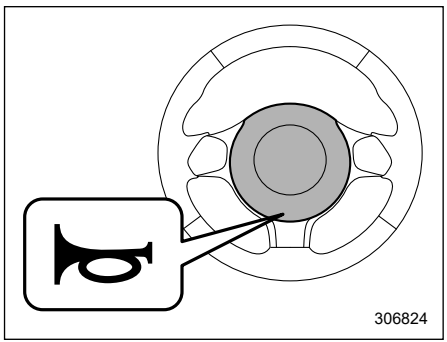

To sound the horn, push the horn pad.

4-1. Ventilator Control.....202
Center Ventilators.....202
Side Ventilators.....202
4-2. Climate Control Panel.....202
4-3. Automatic Climate Control Operation.....204
Sensors.....204
4-4. Manual Climate Control.....205
Airflow Mode Selection.....205
Temperature Control.....206
Fan Speed Control.....206
Air Conditioner Control.....206
Air Inlet Selection.....207
To Turn Off the Climate Control System.....207
4-5. Defrosting.....207
4-6. Operating Tips for Heater and Air Conditioner.....208
Cleaning Ventilator Grille.....208
Efficient Cooling after Parking in Direct Sunlight.....208
Lubrication Oil Circulation in the Refrigerant Circuit.....208
Checking Air Conditioning System before Summer Season.....208
Cooling and Dehumidifying in High Humidity and Low Temperature Weather Condition.....209
Air Conditioner Compressor Shut-Off When Engine Is Heavily Loaded.....209
Refrigerant for Your Climate Control System.....209
4-7. Air Filtration System.....209
Replacing the Cabin Air Filter.....210

4-1. Ventilator Control

■ Center Ventilators

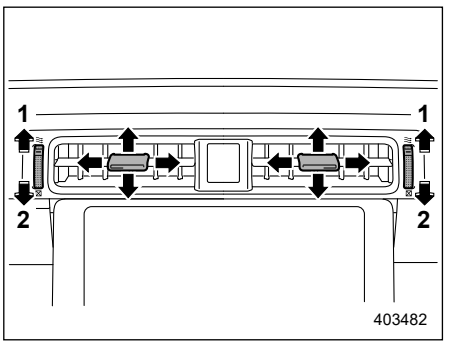

1) Open
2) Close

Move the tab to adjust the flow direction.

To open the ventilator, turn the center grille open/close wheel upward to the "≋" position.

To close it, turn the wheel downward to the "⊠" position.

■ Side Ventilators

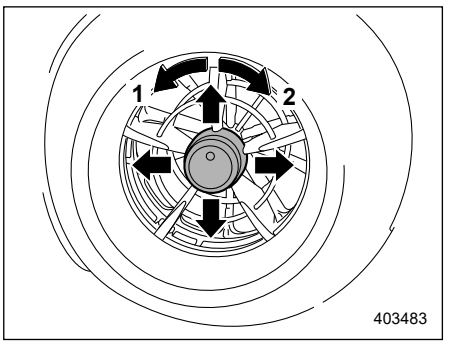

1) Open
2) Close

To adjust the flow direction, move the tab.

4-2. Climate Control Panel

⚠ WARNING

- **The cooling function operates only when the engine is running.**
- **Do not leave children or adults who would normally require the support of others alone in your vehicle. Pets should not be left alone either. On hot, sunny days, temperatures in a closed vehicle could quickly become high enough to cause severe or possibly fatal injuries to people or animals.**

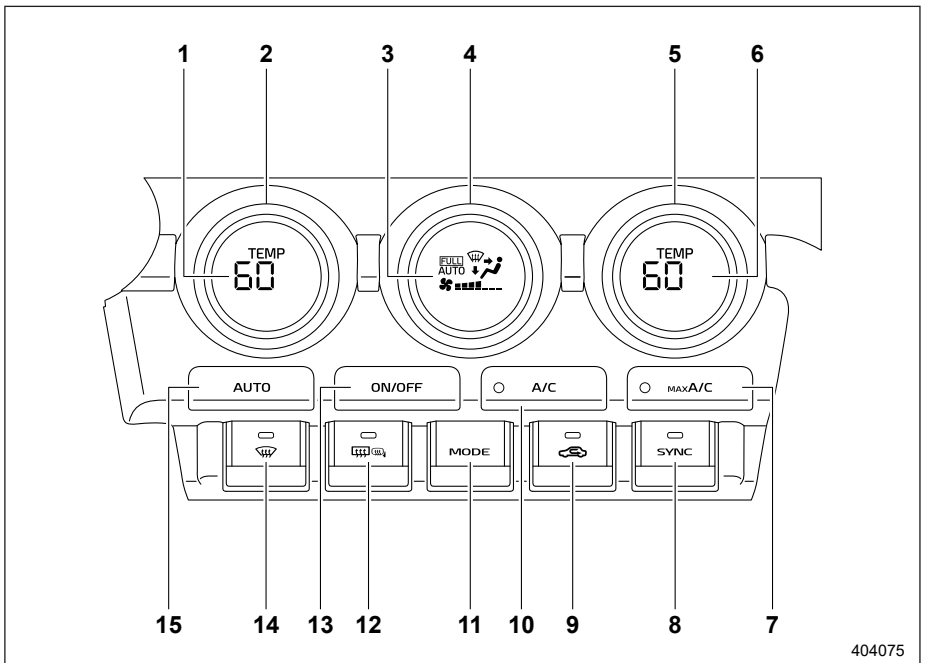

1) Set temperature indicator (driver's side)
2) Temperature control dial (driver's side) (Refer to "Temperature Control" ☞P206.)
3) Climate control mode indicator
4) Fan speed control dial (Refer to "Fan Speed Control" ☞P206.)
5) Temperature control dial (front passenger's side) (Refer to "Temperature Control" ☞P206.)
6) Set temperature indicator (front passenger's side)
7) MAX A/C button (Refer to "MAX A/C mode" ☞P206.)
8) SYNC button (Refer to "SYNC mode" ☞P206.)
9) Air inlet selection button (Refer to "Air Inlet Selection" ☞P207.)
10) Air conditioner button (Refer to "Air Conditioner Control" ☞P206.)
11) Airflow mode selection button (Refer to "Airflow Mode Selection" ☞P205.)
12) Rear window defogger button and outside mirror defogger button (Refer to "Defogger" ☞P189.)
13) ON/OFF button (Refer to "To Turn Off the Climate Control System" ☞P207.)
14) Defroster button (Refer to "Defrosting" ☞P207.)
15) AUTO button (Refer to "Automatic Climate Control Operation" ☞P204.)

4-3. Automatic Climate Control Operation

When this mode is selected, the fan speed, airflow mode, air-inlet control, and air conditioner operation are automatically controlled. To activate this mode, perform the following.

1. Press the AUTO button. The FULL AUTO mode is selected and the “FULL AUTO” indicator light on the display illuminates.
2. Set the preferred temperature using the temperature control dial.

NOTE

• Operate the automatic climate control system when the engine is running.

• Even when cooling is not necessary, the air conditioner will automatically turn on if the temperature is set much lower than the current outlet air temperature. Even in this case, the “A/C” indicator light on the control panel illuminates

• The air conditioner may not operate in the following cases:

- When the cabin temperature is low

- When the ambient temperature decreases close to 32°F (0°C)

• The controllable temperature range may vary depending on the regional specifications of the vehicle.

• If you operate any of the buttons on the control panel other than the ON/OFF button, rear window defogger button, SYNC button and temperature control dial(s) during FULL AUTO mode operation, the “FULL” indicator light on the control panel will turn off and the “AUTO” indicator light will remain illuminated. You can then manually control the system as desired using the button you operated. To change the system back to the FULL AUTO mode, press the AUTO button.

To turn off the climate control system, press the ON/OFF button. Then the air inlet selection will be set to the following.

• When the air inlet selection is set to auto mode: Outside air circulation

• When the air inlet selection is set to manual mode: No change

When the ignition switch is changed to the “OFF” or “ACC” position from “ON”, the air inlet mode will automatically change to the outside air mode regardless of whether it is the auto mode or manual mode.

■ Sensors

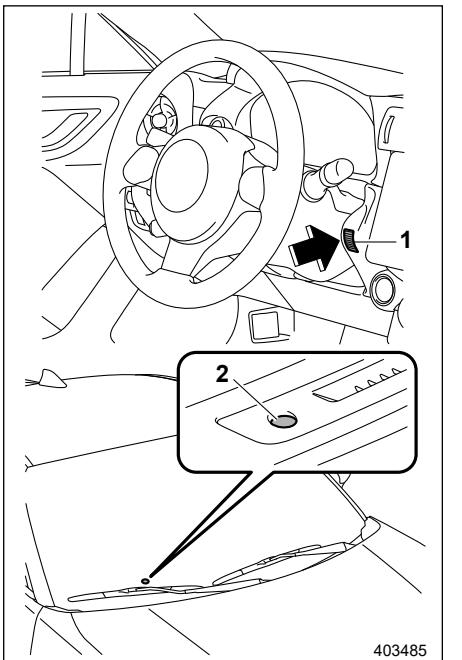

1) Interior air temperature sensor
2) Solar sensor

The automatic climate control system employs several sensors. These sensors are delicate. If they are treated incorrectly

and become damaged, the system may not be able to control the interior temperature correctly. To avoid damaging the sensors, observe the following precautions:

– Do not subject the sensors to impact.
– Keep water away from the sensors.
– Do not cover the sensors.

4-4. Manual Climate Control

■ Airflow Mode Selection

Select the airflow mode using the airflow mode selection button.

Airflow modes are as follows.

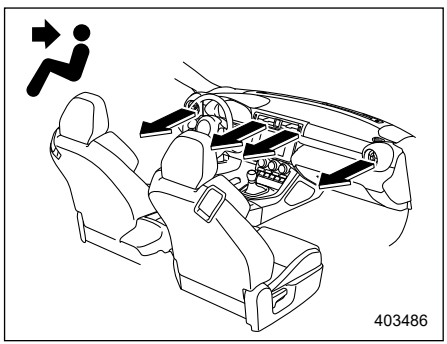

Ventilation: Instrument panel outlets

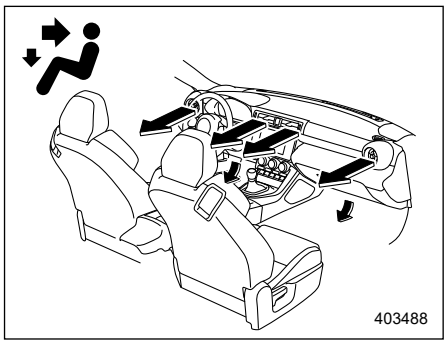

Ventilation 2: Instrument panel outlets and foot outlets

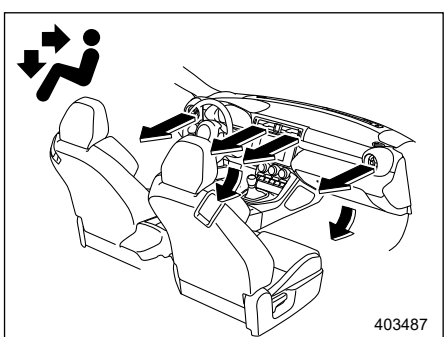

Bi-level: Instrument panel outlets and the foot outlets

– CONTINUED –

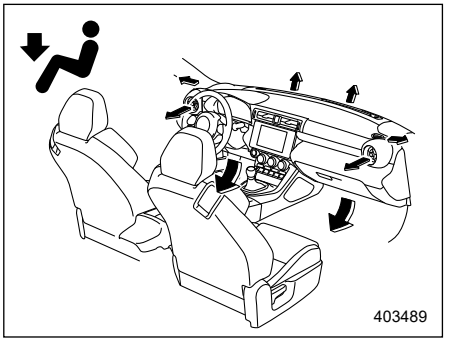

Heat: Foot outlets, both side outlets of the instrument panel and some through windshield defroster outlets (A small amount of air flows to the windshield and both side windows to prevent fogging.)

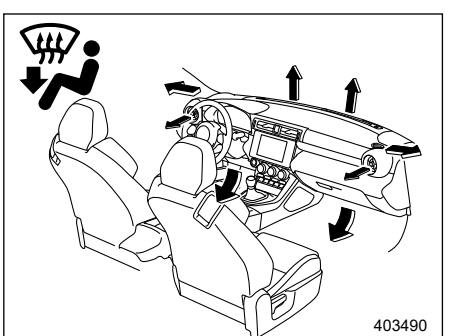

Heat-def: Windshield defroster outlets, foot outlets and both side outlets of the instrument panel

■ Temperature Control

Turn the temperature control dial to set the preferred interior temperature.

NOTE

The controllable temperature range may vary depending on the regional specifications of the vehicle.

▼ MAX A/C mode

For quicker cooling, press the MAX A/C button.

When the MAX A/C mode is on, the following settings will be changed automatically.

- The air conditioner will turn on.
- The temperature will be set on the lowest.
- The fan speed will be set on the maximum speed.
- The air inlet will be set to the recirculation mode.
- The airflow mode setting will be set to the ventilation mode.

To turn off MAX A/C mode and return the previous setting, press the MAX A/C button again.

▼ SYNC mode

When the SYNC mode is turned on, both the driver's and front passenger's side temperatures are synchronized using the driver's side temperature control dial.

Press the SYNC button to turn on the SYNC mode. The SYNC button indicator will illuminate.

Press the SYNC button again or turn the front passenger's side temperature control dial to cancel the SYNC mode. The SYNC button indicator will not illuminate. In this case, temperature control on the driver's side and front passenger's side is separated.

The temperature will be controlled individually using the driver's and front passenger's temperature control dials.

■ Fan Speed Control

Select the preferred fan speed by turning the fan speed control dial.

■ Air Conditioner Control

The air conditioner operates only when the engine is running.

Press the air conditioner button while the fan is in operation to turn on the air conditioner. When the air conditioner is on, the "A/C" indicator light illuminates.

To turn off the air conditioner, press the button again. The indicator light will turn off.

NOTE

For efficient defogging or dehumidifying in cold weather, turn on the air conditioner. However, if the ambient temperature decreases to approximately 32°F (0°C), the air conditioner and dehumidification system may not work properly.

■ Air Inlet Selection

Select the air inlet by pressing the air inlet selection button.

- Recirculation:

When the indicator light on the air inlet selection button illuminates, interior air is recirculated inside the vehicle. Press the air inlet selection button to the ON position in the following cases.

- When driving on a dusty road
- When you want cooling performance to increase (for example, in particularly hot weather)

- Outside air circulation:

When the indicator light on the air inlet selection button does not illuminate, outside air is drawn into the passenger compartment. Press the air inlet selection button to the OFF position in the following cases.

- When the road is no longer dusty
- When the interior has cooled to a comfortable temperature

⚠ WARNING

Continued operation in the recirculation mode may fog up the windows. Switch to the outside air circulation mode as soon as the outside dusty condition clears.

NOTE

When outside air circulation is selected, the system may automatically adjust the air inlet setting depending on such factors as the temperature setting, the temperature inside the vehicle, or conditions outside the vehicle.

■ To Turn Off the Climate Control System

To turn off the climate control system, press the ON/OFF button.

4-5. Defrosting

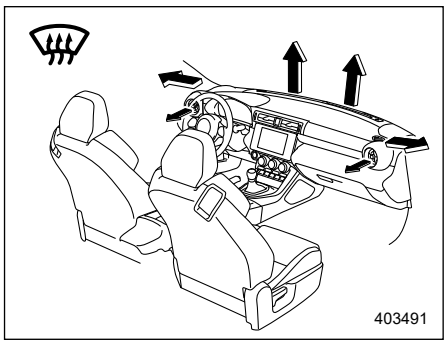

Select the “ ” or “ ” mode to defrost or dehumidify the windshield and the side door windows.

NOTE

• When the “ ” or “ ” mode is selected, the air conditioner operates automatically regardless of the position of the air conditioner button to defrost the windshield more quickly. However, the indicator on the air conditioner button may not illuminate. At the same time, the air inlet selection is automatically set to the outside air circulation mode.

• After defrosting the windshield by pressing the defroster button “ ”, pressing the button again returns the

– CONTINUED –

system to the setting that had been selected before the defroster was activated.

4-6. Operating Tips for Heater and Air Conditioner

■ Cleaning Ventilator Grille

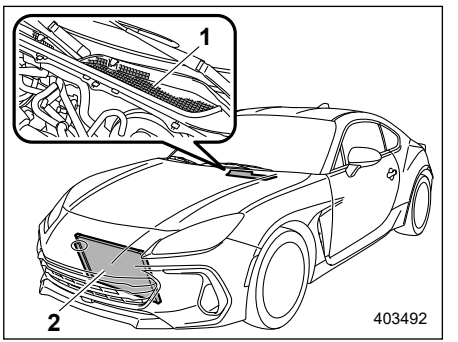

1) Front ventilator inlet grille
2) Condenser

Always keep the front ventilator inlet grille free of snow, leaves, or other obstructions to ensure efficient heating and defrosting. Since the condenser is located in front of the radiator, this area should be kept clean because cooling performance is impaired by any accumulation of insects and leaves on the condenser.

■ Efficient Cooling after Parking in Direct Sunlight

After parking in direct sunlight, drive with the windows open for a few minutes to allow outside air to circulate into the heated interior. This results in quicker cooling by the air conditioner. Keep the windows closed during the operation of the air conditioner for maximum cooling efficiency.

■ Lubrication Oil Circulation in the Refrigerant Circuit

Operate the air conditioner compressor at a low engine speed (at idle or low driving speeds) a few minutes each month during the off-season to circulate its oil.

■ Checking Air Conditioning System before Summer Season

Check the air conditioner unit for refrigerant leaks, hose conditions, and proper operation each spring. Have the air conditioning system checked by your SUBARU dealer.

■ Cooling and Dehumidifying in High Humidity and Low Temperature Weather Condition

Under certain weather conditions (high relative humidity, low temperatures, etc.) a small amount of water vapor emission from the air outlets may be noticed. This condition is normal and does not indicate any problem with the air conditioning system.

■ Air Conditioner Compressor Shut-Off When Engine Is Heavily Loaded

To improve acceleration and gas mileage, the air conditioner compressor is designed to temporarily shut off during air conditioner operation whenever the accelerator is fully depressed such as during rapid acceleration or when driving on a steep upgrade.

■ Refrigerant for Your Climate Control System

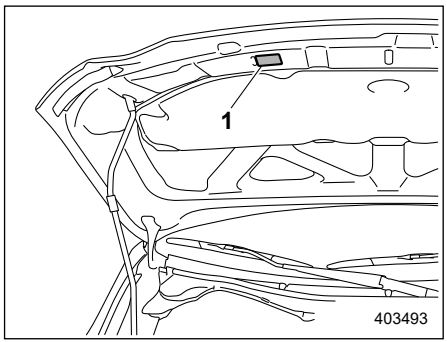

1) Air conditioner label

Your air conditioner uses ozone friendly refrigerant R-1234yf (HFO-1234yf).

Before adding, changing or checking the refrigerant, check the air conditioner label in the location shown in the illustration to confirm the type of refrigerant is used in your vehicle.

Consult your SUBARU dealer for service.

Repairs needed as a result of using the wrong refrigerant are not covered under warranty.

4-7. Air Filtration System

Your vehicle's air conditioning system is equipped with an air filtration system. Replace the cabin air filter according to the replacement schedule found in the "Warranty and Maintenance Booklet". This schedule should be followed to maintain the filter's dust collection ability. Under extremely dusty conditions, the filter should be replaced more frequently. Have your filter checked or replaced by your SUBARU dealer. For replacement, use only a genuine SUBARU air filter kit.

⚠ CAUTION

Contact your SUBARU dealer if the following occurs, even if it is not yet time to change the filter.

- **Reduction of the airflow through the vents.**
- **Windshield gets easily fogged or misted.**

NOTE

The filter can influence the air conditioning, heating and defroster performance if not properly maintained.

– CONTINUED –

■ Replacing the Cabin Air Filter

1. Remove the glove box.
   (1) Open the glove box.

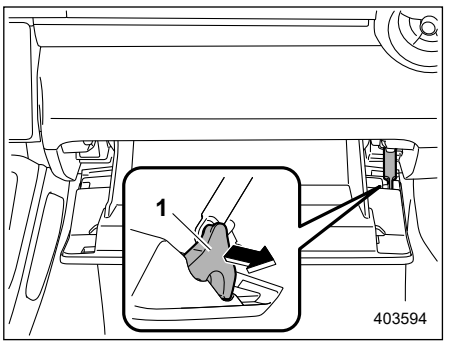

1) Link pocket

(2) Remove the link pocket from the glove box.

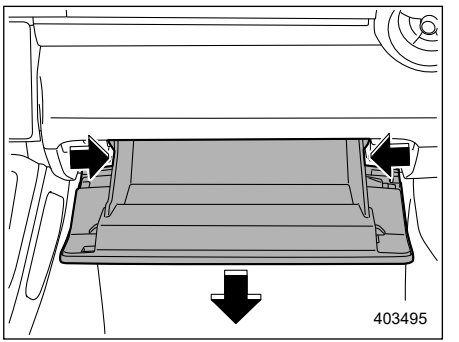

(3) Push both sides of the glove box inward to unlock the stoppers and then pull down the glove box as far as it will go.

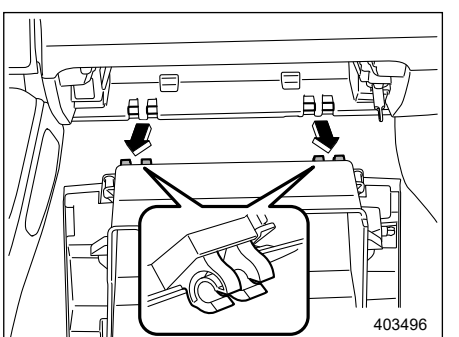

(4) Pull out the glove box horizontally and remove the hinge portion. When doing this, be careful not to damage the hinge.

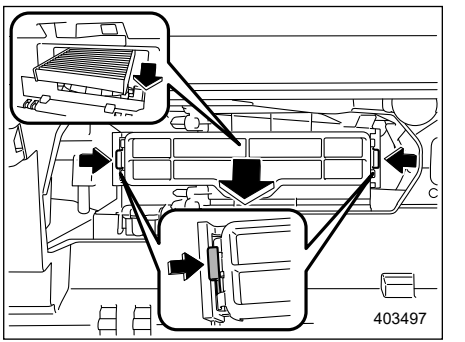

2. Remove the cabin air filter according to the following procedure in order to prevent dust on the air cleaner from falling to the inside of its housing.
   (1) Pinch both tabs and remove the filter cover.
   (2) Gently tilt down the end of the filter and slowly pull it out 0.4 in (1 cm).
   (3) Slowly pull out the rest of the filter.

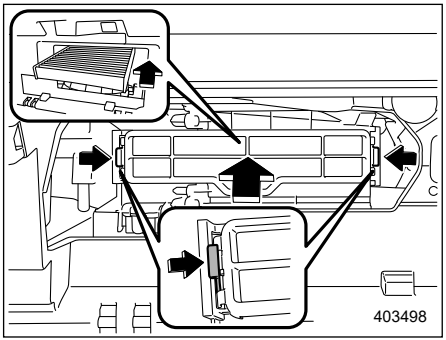

3. Replace the cabin air filter with a new one and then reinstall the cover.

⚠ CAUTION

The arrow mark on the filter must point UP.

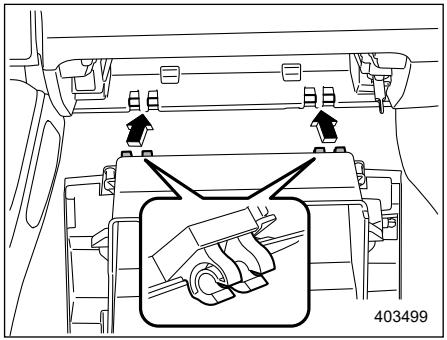

4. Reinstall the glove box in the reverse order of removal.
5. Close the glove box.

5-1. Antenna.....214
Roof Antenna.....214
5-2. Audio Set.....214

5-1. Antenna

■ Roof Antenna

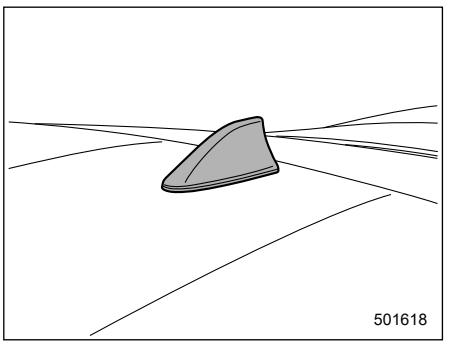

The roof antenna is installed on the roof.

5-2. Audio Set

If your vehicle is equipped with a genuine SUBARU audio system, refer to the separate audio Owner's Manual for details.

6-1. Interior Light 216
Map Lights 216
OFF Delay Timer 216
6-2. Sun Visors 217
Vanity Mirror with Light (If Equipped) 217
6-3. Storage Compartment 217
Glove Box 218
Center Console 218
6-4. Bottle Holders 219
6-5. Accessory Power Outlets 219
6-6. USB Power Supply 220
How to Use the USB Power Supply 221
6-7. Ashtray (Dealer Option) 221
6-8. Floor Mat 222
6-9. Under-Floor Storage Compartment 223

6-1. Interior Light

⚠ CAUTION

When leaving your vehicle, make sure the lights are turned off to avoid battery discharge.

■ Map Lights

▼ Map light switches

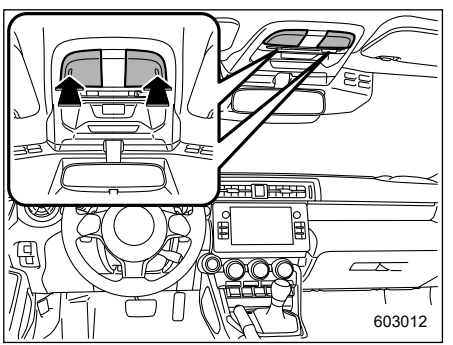

To turn on the map light, press the lens.

To turn it off, press the lens again.

▼ Door interlock switch

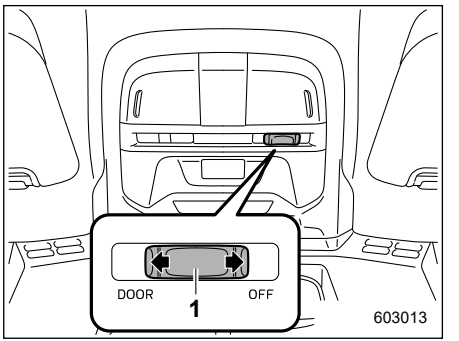

1) Door interlock switch

The door interlock switch has the following positions.

OFF: The map lights do not illuminate automatically in conjunction with a door opening. However, the lights can be turned on manually by pressing the map light lens.

DOOR: The map lights illuminate automatically when any of the doors (other than the trunk lid) is opened even while the map light is off. Several seconds after all of the doors (other than the trunk lid) are closed, the map lights gradually turn off. For details, refer to "OFF Delay Timer" ☞P216.

■ OFF Delay Timer

Map lights have an automatic illumination function.

When the interior light switch is set to the “DOOR” position, the light will automatically turn on and off depending on the locking and unlocking of the doors, the opening and closing of the doors, as well as the position of the ignition switch.

NOTE

The setting for the period of time in which the lights remain on (OFF delay timer) can be changed by a SUBARU dealer. Contact your SUBARU dealer for details. Also, the setting can be changed by operating the center information display. For details, refer to "Car settings" ☞P169.

6-2. Sun Visors

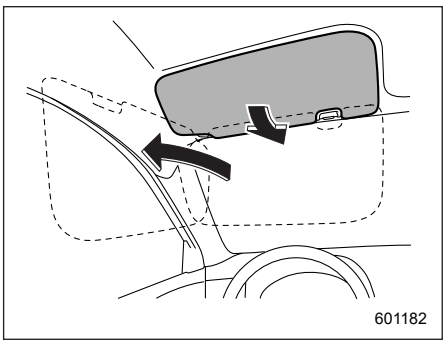

To block out glare, swing down the visors.

To use the sun visor at a side window, swing it down and move it sideways.

■ Vanity Mirror with Light (If Equipped)

⚠ CAUTION

Keep the vanity mirror cover closed while the car is being driven to avoid being blinded by glare.

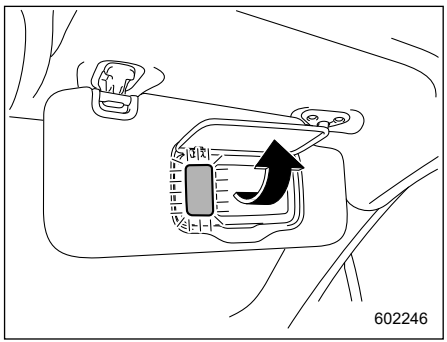

To use the vanity mirror, swing down the sun visor and open the vanity mirror cover.

The lights beside the vanity mirror illuminate when the mirror cover is opened.

NOTE

Use of the vanity mirror light for a long period of time while the engine is not running can cause battery discharge.

6-3. Storage Compartment

⚠ CAUTION

- **Keep the storage compartment closed when it is not being used. If left open, in the event of sudden braking, etc., stowed items may fly out, possibly leading to an accident.**
- **Do not store the following items in the storage compartment. Otherwise, it may cause a fire or accident.**
  - **Spray cans, containers with flammable or corrosive liquids or any other dangerous items.**
  - **Plastic or other heat-vulnerable or flammable articles such as a lighter.**

– CONTINUED –

■ Glove Box

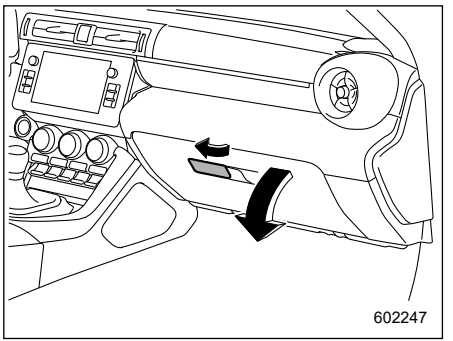

To open the glove box, pull the handle. To close it, push the lid firmly upward.

■ Center Console

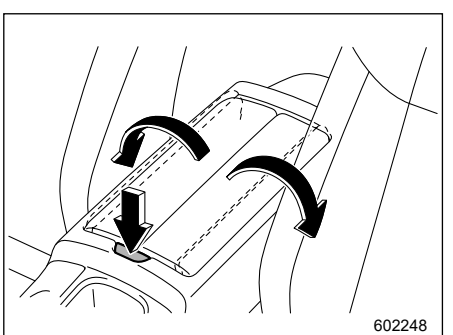

To open the center console, push on the button lightly and it will automatically open.

▼ Cup Holder and Console Tray

⚠ CAUTION

- **Take care to avoid spills. Beverages, if hot, might burn you and/or your passengers. Spilled beverages may also damage upholstery, carpets or audio equipment.**
- **Do not pick up a cup from the cup holder or put a cup in the holder while you are driving, as this may distract you and lead to an accident.**
- **Take care not to spill a beverage on the select lever/shift lever or any switch(es) in the adjacent area. If the beverage is spilled, it may cause a malfunction of the select lever/shift lever and/or switch(es).**

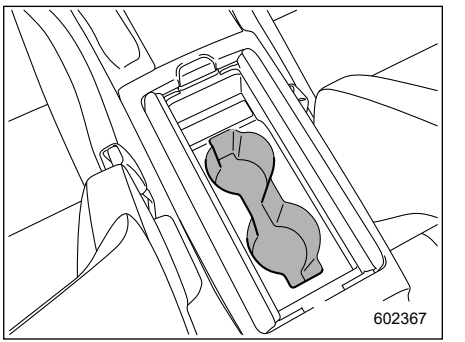

MT models

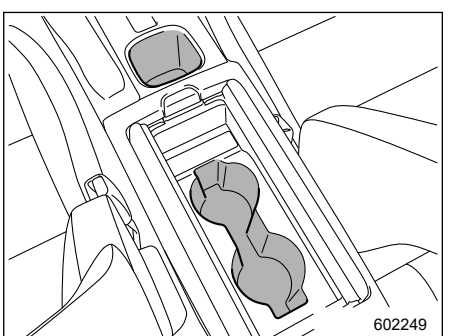

AT models

The cup holder and console tray is built into the center console.

6-4. Bottle Holders

CAUTION

- **Do not pick up a bottle from the bottle holder or put a bottle in the holder while you are driving, as this may distract you and lead to an accident.**
- **When placing a beverage in a bottle holder, make sure it is capped. Otherwise, the beverage could spill when opening/closing the door or while driving and, if the beverage is hot, it could burn you and/or your passengers.**

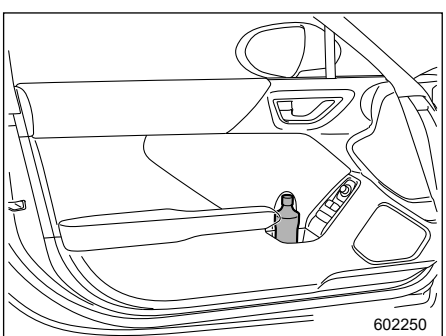

The bottle holder equipped on each door trim can be used to hold beverage bottles and other items.

6-5. Accessory Power Outlets

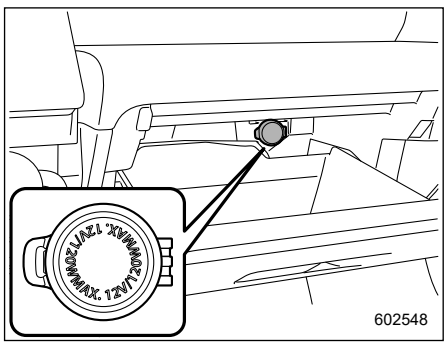

Power outlet in the glove box

Accessory power outlets are provided in the glove box. Electrical power (12 V DC) from the battery is available at any of the outlets when the ignition switch is in either the “ACC” or “ON” position.

You can use an in-vehicle electrical appliance by connecting it to an outlet.

The maximum power rating of an appliance that can be connected is **120 W**. Do not use an appliance which exceeds the indicated wattage for each outlet.

When using appliances connected to two or more outlets simultaneously, the total power consumed by them must not exceed 120 W.

CAUTION

- **Do not attempt to use a cigarette lighter in the accessory power outlet.**
- **Do not place any foreign objects, especially metal ones such as coins or aluminum foil, into the accessory power outlet. That could cause a short circuit. Always put the cap on the accessory power outlet when it is not in use.**
- **Use only electrical appliances which are designed for 12 V DC.**

  The maximum power rating of an appliance that can be connected is 120 W. Do not use an appliance which exceeds the indicated wattage for each outlet.

  When using appliances connected to two or more outlets simultaneously, the total power consumed by them must not exceed 120 W. Overloading the accessory power outlet can cause a short circuit. Do not use double adapters or more than one electrical appliance.

– CONTINUED –

- If the plug on your electric appliance is either too loose or too tight for the accessory power outlet, this can result in a poor contact or cause the plug to get stuck. Only use plugs that fit properly.
- Use of an electric appliance in the accessory power outlet for a long period of time while the engine is not running can cause battery discharge.
- Before driving your vehicle, make sure that the plug and the cord on your electrical appliance will not interfere with your shifting gears and operating the accelerator and brake pedals. If they do, do not use the electrical appliance while driving.

6-6. USB Power Supply

⚠ CAUTION

- The specification of a USB terminal that can be used is the A-type. If a different specification of terminal is connected, power supply or charging may not be possible, or the device may malfunction.
- There is a risk that a connected device may malfunction or data may be damaged. The connection of a device shall be performed at your responsibility.
- To avoid an electric shock or a malfunction, observe the following precautions.
  - Do not connect a USB hub.
  - Do not insert any metal or other foreign object into the USB terminal.
  - Do not spill water or other liquid on the USB terminal.
- Be careful not to pull the connected cable. Doing so could break the USB terminal and the connected device.
- If a device is connected for a long time when the engine is not running, doing so may cause the risk of a discharged battery. Even when the engine is running, we recommend that you do not connect a device for an unnecessarily long time.
- Do not connect a malfunctioning device. Doing so may cause the risk of smoke and fire.

NOTE

- The rated voltage of each USB terminal is 5 V/2.1 A (total 4.2 A). For details about the maximum rated power, refer to "How to Use the USB Power Supply" ☞P221. Before connecting a device, be sure to read the instruction manual of the device and check whether or not this specification of the output is supported by the device. If a device that requires power exceeding the maximum rating is connected, power supply or charging may not be possible. Even if charging could be completed, the time required for charging may be longer than when the genuine charger for that device is used.
- Depending on the device, charging may be possible only when a special

cable is used. In this case, be sure to connect the device using the special cable.

- **When a device that communicates with a PC is connected, power supply or charging may not be possible.**
- **When connect a device for charging, disconnect the device promptly after charging is completed.**

■ How to Use the USB Power Supply

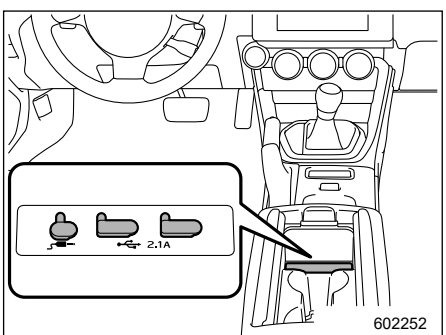

Console USB power supply (an audio device can be connected and used)

Use the USB terminal to use or charge an electronic device.

When using the USB, open the USB power supply cover. After use, close it.

When the ignition switch is in the “ACC” or “ON” position, the power can be supplied to the electronic device. Up to 5 V/2.1 A can be supplied from each terminal (total of 4.2 A).

6-7. Ashtray (Dealer Option)

⚠ CAUTION

- **Do not use ashtrays as waste receptacles or leave a lighted cigarette in an ashtray. This could cause a fire.**
- **Always extinguish matches and cigarettes before putting them into the ashtray, and then close the ashtray securely. If you keep the ashtray open, the fire of the cigarette may spread to another cigarette butt and start a fire.**
- **Do not put flammable material in the ashtray.**
- **Do not leave a lot of cigarette butts in the ashtray.**

NOTE

Particles of ash and tobacco will accumulate around the hinges of the ashtray’s inner lid. Clean them off using a toothbrush or a similar narrow-ended implement.

– CONTINUED –

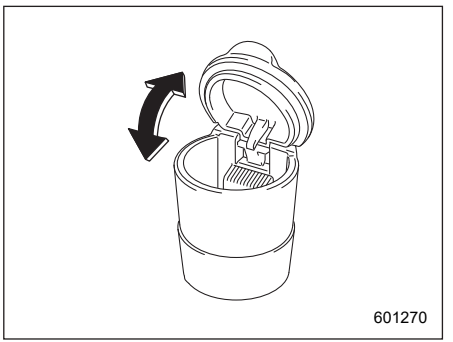

The portable ashtray can be installed in each cup holder or bottle holder. For the locations of the cup holders, refer to "Cup Holder and Console Tray" ☞P218. For the locations of the bottle holders, refer to "Bottle Holders" ☞P219.

When using the ashtray, open the lid of the ashtray. Fully close the lid after using the ashtray to help reduce residual smoke.

6-8. Floor Mat

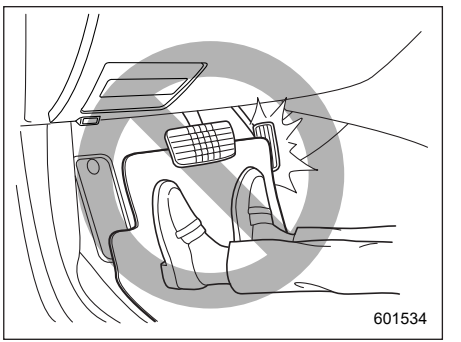

⚠ CAUTION

If the floor mat slips forward and interferes with the movement of the pedals during driving, it could cause an accident. Observe the following precautions to prevent the floor mat from slipping forward.

- **Be sure to use a genuine SUBARU floor mat designed with grommets in the correct locations.**
- **Make sure that the driver's floor mat is placed back in its proper location and is correctly secured on its retaining pins.**
- **Do not use more than one floor mat.**

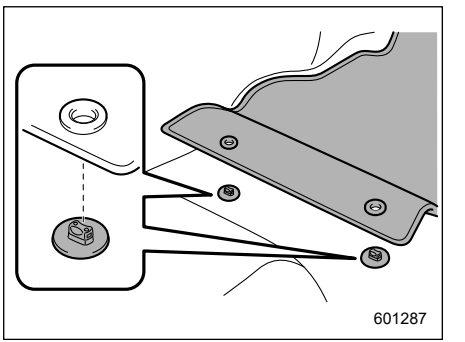

1. Insert the retaining hooks (clips) into the floor mat eyelets.

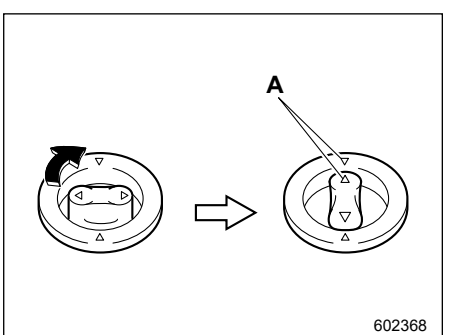

2. Turn the upper knob of each retaining hook (clip) to secure the floor mats in place.

A: Always align the "△" marks.

6-9. Under-Floor Storage Compartment

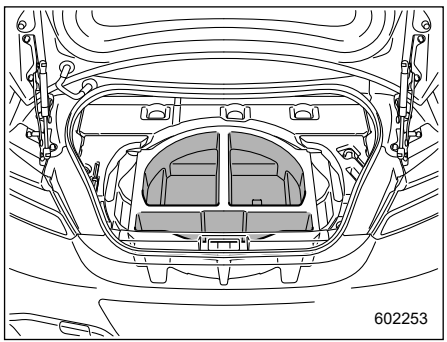

The subfloor storage compartment is located under the floor of the trunk and can be used to store small items. To open the lid, pull the tab or handle up.

NOTE

When storing a flat tire, put the subfloor storage in the trunk.

⚠ CAUTION

- **Always keep the lid of the subfloor storage compartment closed while driving to reduce the risk of injury in the event of sudden stop or an accident.**
- **Do not store spray cans, containers with flammable or corrosive liquids or any other dangerous items in the subfloor storage compartment.**

7-1. Fuel 227
Fuel Requirements 227
Fuel Filler Lid and Cap 228
7-2. State Emission Testing (U.S. Only) 231
7-3. Preparing to Drive 232
7-4. Starting and Stopping Engine 233
Safety Precautions 233
Operating Range for Push-Button Start System 233
General Precautions When Starting Engine 233
Starting Engine 234
Automatic Vehicle Shut Down Function 236
Stopping Engine 237
When Access Key Fob Does Not Operate Properly 237
Steering Lock 237
7-5. Manual Transmission 238
Shifting Speeds 239
Driving Tips 240
7-6. Automatic Transmission 240
Select Lever 241
Adaptive Control 242
Shift Lock Function 243
Selection of Manual Mode 244
Driving Tips 245
7-7. Driving Mode Select Switch 246
Normal Mode 246
Sport Mode 246
Snow Mode (AT models) 246
Driving Mode Select Switch 247
7-8. Active Sound Control 247
7-9. Power Steering 248
7-10. Braking 249
Braking Tips 249
Brake System 249
Disc Brake Pad Wear Warning Indicators 250
High performance brake system (Brembo equipped models) 250
7-11. ABS (Anti-Lock Brake System) 251
ABS Self-Check 251
ABS Warning Light 251
7-12. Electronic Brake Force Distribution (EBD) System 252
EBD System Malfunctions 252
7-13. Vehicle Stability Control (VSC)/ TRAC System 253
Vehicle Stability Control (VSC) System 253
TRAC System 253
Vehicle Stability Control (VSC) System Monitor 254
Vehicle Stability Control (VSC) OFF Switch 254
7-14. TRACK Mode 256
TRACK Mode 256
Selecting TRAC Mode and Vehicle Stability Control (VSC) Mode 257
7-15. Tire Pressure Monitoring System (TPMS) (If Equipped) 257
Certification for the Receiver 259
Certification for the Transmitter 259
TPMS Screen 260
Initializing the Tire Pressure Monitoring System 260
How to Initialize the Tire Pressure Monitoring System (If Equipped) 260
If You Press the Tire Pressure Monitoring Reset Switch Accidentally 260
Initialization Procedure 260

When Initialization of the Tire Pressure Monitoring System has Failed....261
Registering ID Codes....261
Changing the ID code set....261
7-16.Parking Your Vehicle....261
Parking Brake....261
Parking Tips....262
7-17.Hill Start Assist System....263
To Activate/Deactivate the Hill Start Assist System....264
Hill Start Assist Indicator Light....265
7-18.Rear View Camera....266
How to Use the Rear View Camera....267
Viewing Range on the Screen....267
Help Lines....268
7-19.BSD/RCTA (If Equipped)....270
System Features....271
System Operation....273
BSD/RCTA Approach Indicator Light/ Warning Buzzer....275
BSD/RCTA OFF Indicator....276
BSD/RCTA Warning Indicator....277
To Turn On/Off the BSD/RCTA....277
Certification for the BSD/RCTA....278
Handling of Radar Sensors....279
7-20.Reverse Automatic Braking (RAB) System (If Equipped)....280
Reverse Automatic Braking (RAB) System Overview....281
Operating Conditions....282
Reverse Automatic Braking (RAB) system Operation....286
Canceling the Reverse Automatic Braking (RAB) System Operation....287
Reverse Automatic Braking (RAB) System ON/OFF Setting....287
RAB Warning Indicator....288
Handling of the Sonar Sensors....288
7-21.Sonar Audible Alarm System (If Equipped)....289
Operating Conditions....289
Sonar Audible Alarm operation....292
Suspension of the Sonar Audible Alarm....293
Sonar audible alarm warning indicator and warning display....294
When the Sonar Audible Alarm is enabled/ disabled....294
Handling of the Sonar Sensors....295

7-1. Fuel

⚠ CAUTION

- **Use of a fuel which is low in quality or use of an inappropriate fuel additive may cause damage to the engine and/or fuel system.**
- **Some gas stations, particularly those in high altitude areas, offer fuels posted as regular octane gasoline with an octane rating below 93 AKI (98 RON). Use of those fuels are not recommended.**

■ Fuel Requirements

The engine is designed to operate using **unleaded gasoline** with an octane rating of **93 AKI (98 RON) or higher**.

If **unleaded gasoline** with an octane rating of **93 AKI (98 RON)** is not available, unleaded gasoline with an octane rating of **91 AKI (95 RON)** may be used with no detriment to engine durability or driveability.

However, you may notice a slight decrease in maximum engine performance and you may hear some knocking (pinging) from the engine while using **91 AKI (95 RON)** fuel. Use of **91 AKI (95 RON)** fuel will not affect your warranty coverage.

▼ Fuel octane rating

Using a gasoline with a lower octane rating can cause persistent and heavy knocking, which can damage the engine. Do not be concerned if your vehicle sometimes knocks lightly when you drive up a hill or when you accelerate. See your dealer or a qualified service technician if you use a fuel with the specified octane rating and your vehicle knocks heavily or persistently.

▽ RON

This octane rating is the Research Octane Number.

▽ AKI

This octane rating is the average of the Research Octane and Motor Octane numbers and is commonly referred to as the Anti Knock Index (AKI).

▼ Unleaded gasoline

The neck of the fuel filler pipe is designed to accept only an unleaded gasoline filler nozzle. Under no circumstances should leaded gasoline be used because it will damage the emission control system and may impair driveability and fuel economy.

▼ Reformulated gasoline

SUBARU supports the use of reformulated gasoline when available. Reformulated gasoline has been blended to burn more cleanly and reduce vehicle emissions.

▼ MMT

Some gasoline contains an octane-enhancing additive called MMT (Methylcyclopentadienyl Manganese Tricarbonyl). If you use such fuels, your emission control system performance may deteriorate and the CHECK ENGINE warning light/malfunction indicator light may turn on. If this happens, return to your authorized SUBARU Dealer for service. If it is determined that the condition is caused by the type of fuel used, repairs may not be covered by your warranty.

▼ Gasoline for cleaner air

Your use of gasoline with detergent additives will help prevent deposits from forming in your engine and fuel system. This helps keep your engine in tune and your emission control system working properly, and is a way of doing your part for cleaner air. If you continuously use a high quality fuel with the proper detergent and other additives, you should never

– CONTINUED –

need to add any fuel system cleaning agents to your fuel tank.

Many gasolines are now blended with materials called oxygenates. Use of these fuels can also help keep the air cleaner. Oxygenated blend fuels, such as ethanol (ethyl or grain alcohol) may be used in your vehicle, but should contain no more than 15% ethanol for the proper operation of your SUBARU.

Do not use any gasoline that contains more than 15% ethanol, including from any pump labeled E30, E50 or E85 (which are only some examples of fuel containing more than 15% ethanol).

In addition, some gasoline suppliers are now producing reformulated gasolines, which are designed to reduce vehicle emissions. SUBARU approves the use of reformulated gasoline.

If you are not sure what the fuel contains, you should ask your service station operators if their gasolines contain detergents and oxygenates and if they have been reformulated to reduce vehicle emissions.

As additional guidance, only use fuels suited for your vehicle as explained in the following description.

- Fuel should be unleaded and have an octane rating no lower than that specified in this manual.
- Methanol (methyl or wood alcohol) is sometimes mixed with unleaded gasoline. Methanol can be used in your vehicle **ONLY** if it does not exceed 5% of the fuel mixture **AND** if it is accompanied by sufficient quantities of the proper cosolvent and corrosion inhibitors required to prevent damage to the fuel system. Do not use fuel containing methanol **EXCEPT** under these conditions.
- If undesirable driveability problems are experienced and you suspect they may be fuel related, try a different brand of gasoline before seeking service at your SUBARU dealer.
- Fuel system damage or driveability problems which result from the use of improper fuel are not covered under the SUBARU Limited Warranty.

▼ TOP TIER™ fuel

SUBARU recommends the use of TOP TIER™ Approved Gasoline. For more information on TOP TIER™ Approved Gasoline and a list of marketers, see the official website www.toptiergas.com.



■ Fuel Filler Lid and Cap

▼ Locations of the fuel filler lid

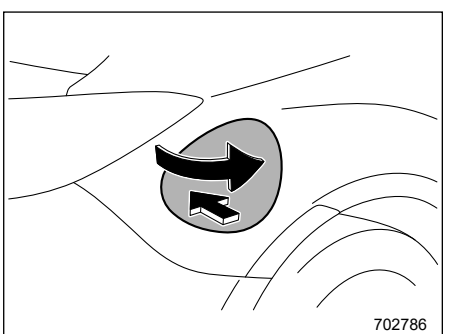

▼ Refueling

Only one person should be involved in refueling. Do not allow others to approach the area of the vehicle near the fuel filler pipe while refueling is in progress.

Be sure to observe any other precautions that are posted at the service station.

1. Stop the vehicle, turn the ignition switch to the “OFF” position and turn off all the other electrical components.
2. To unlock the fuel filler lid, perform one of the operations below.
   – Press the “” button on the key fob.
   – Press the unlock side of the power door locking switch.
3. Push the rear side of the fuel filler lid.
4. The fuel filler lid opens automatically. Open it further by hand.

⚠ WARNING

Before opening the fuel filler cap, first touch the vehicle body or a metal portion of the fuel pump or similar object to discharge any static electricity that may be present on your body. If your body is carrying an electrostatic charge, there is a possibility that an electric spark could ignite the fuel, which could burn you. To avoid acquiring a new static electric charge, do not get back into the vehicle while refueling is in progress.

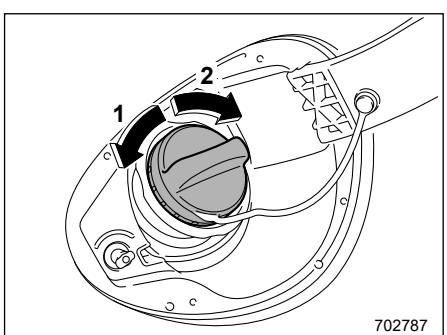

1) Open
2) Close

5. Remove the fuel filler cap by turning it slowly counterclockwise.

⚠ WARNING

- **Gasoline vapor is highly flammable. Before refueling, always turn the ignition switch to the “OFF” position first and then close all vehicle doors and windows. Make sure that there are no lighted cigarettes, open flames or electrical sparks in the adjacent area. Only handle fuel outdoors. Quickly wipe up any spilled fuel.**
- **When opening the cap, grasp it firmly and turn it slowly to the left. Do not remove the cap quickly. Fuel may be under pressure and spray out of the fuel filler neck, especially in hot weather. If you hear a hissing sound while you are removing the cap, wait for the sound to stop and then slowly open the cap to prevent fuel from spraying out and creating a fire hazard.**

– CONTINUED –

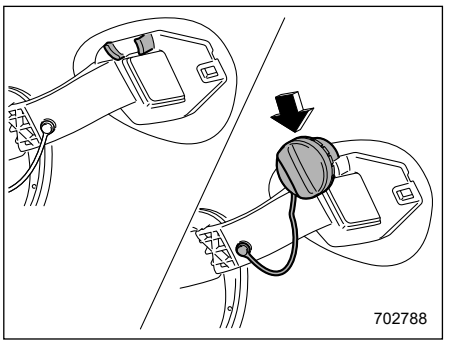

6. Set the fuel filler cap on the cap holder inside the fuel filler lid.

⚠ WARNING

- **When refueling, insert the fuel nozzle securely into the fuel filler pipe. If the nozzle is lifted or not fully inserted, its automatic stopping mechanism may not function, causing fuel to overflow the tank and creating a fire hazard.**
- **Stop refueling when the automatic stop mechanism on the fuel nozzle activates. If you continue to add fuel, temperature changes or other conditions may cause fuel to overflow from the tank and create a fire hazard.**

7. Stop filling the tank after the fuel filler pump automatically stops. Do not add any more fuel.

8. Put the cap back on and turn it clockwise until you hear a clicking noise. Be certain not to catch the tether under the cap while tightening.

⚠ CAUTION

Make sure that the cap is tightened until it clicks to prevent fuel spillage in the event of an accident.

9. Close the fuel filler lid completely.

⚠ CAUTION

Do not let fuel spill on the exterior surfaces of the vehicle. Because fuel may damage the paint, be sure to wipe off any spilled fuel quickly. Paint damage caused by spilled fuel is not covered under the SUBARU Limited Warranty.

NOTE

- **You will see the "⛽▶" sign in the fuel gauge. This indicates that the fuel filler lid is located on the right side of the vehicle.**
- **If the fuel filler cap is not tightened until it clicks or if the tether is caught under the cap, the CHECK ENGINE warning light/malfunction indicator light may illuminate. Refer to "CHECK ENGINE Warning Light/Malfunction Indicator Light" ☞P140.**
- **To lock the fuel filler lid, perform one of the operations below. However if these operations are performed when the fuel filler lid is open, the fuel filler lid will not lock when it is subsequently closed.**
  - **Press the "🔒" button on the key fob.**
  - **Press the lock side of the power door locking switch.**

⚠ CAUTION

- **Never add any cleaning agents to the fuel tank. The addition of a cleaning agent may cause damage to the fuel system.**
- **After refueling, turn the cap to the right until it clicks to ensure that it is fully tightened. If the cap is not securely tightened, fuel may leak out while the vehicle is being driven or fuel spillage could occur in the event of an accident, creating a fire hazard.**

- **Do not let fuel spill on the exterior surfaces of the vehicle. Because fuel may damage the paint, be sure to wipe off any spilled fuel quickly. Paint damage caused by spilled fuel is not covered under the SUBARU Limited Warranty.**
- **Always use a genuine SUBARU fuel filler cap. If you use the wrong cap, it may not fit or have proper venting and your fuel tank and emission control system may be damaged. It could also lead to fuel spillage and a fire.**
- **Immediately put fuel in the tank whenever the low fuel warning light illuminates. Engine misfires as a result of an empty tank could cause damage to the engine. Continuing to operate your vehicle at an extremely low fuel level may result in a reduction of engine performance.**

▼ If the fuel filler lid cannot be opened

If the fuel filler lid cannot be opened due to a malfunction or a dead battery, it can be opened from the trunk.

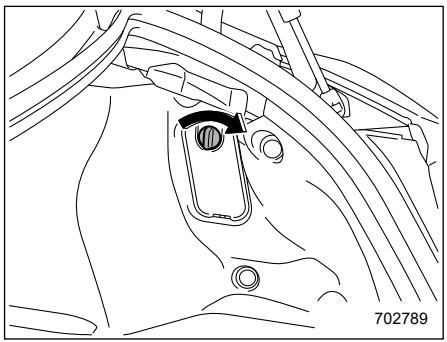

1. Remove the access cover at the right-side of the trunk trim.

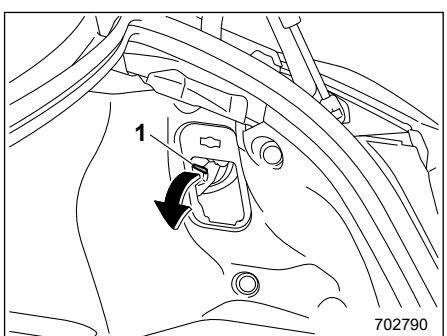

1) Lever

2. Push the yellow lever to unlock the fuel filler lid.

7-2. State Emission Testing (U.S. Only)

⚠ CAUTION

Resultant vehicle damage due to improper testing is not covered under the SUBARU Limited Warranty and is the responsibility of the state inspection program or its contractors or licensees.

California and a number of federal states have Inspection/Maintenance programs to inspect your vehicle's emission control system. If your vehicle does not pass this test, some states may deny renewal of your vehicle's registration.

Your vehicle is equipped with a computer that monitors the performance of the engine's emission control system. Certified emission inspectors will inspect the On-Board Diagnostic (OBDII) system as part of the state emission inspection process. The OBDII system is designed to detect engine and transmission problems that might cause the vehicle emissions to exceed allowable limits. OBDII inspections apply to all 1996 model year and newer passenger cars and trucks. Over 30 states plus the District of Columbia

– CONTINUED –

have implemented emission inspection of the OBDII system.

- The inspection of the OBDII system consists of a visual operational check of the "**CHECK ENGINE**" warning light/ malfunction indicator light (MIL) and an examination of the OBDII system with an electronic scan tool.
- A vehicle passes the OBDII system inspection if proper operation of the "**CHECK ENGINE**" warning light is observed, there are no stored diagnostic trouble codes, and the OBDII readiness monitors are all complete.
- A vehicle fails the OBDII inspection if the "**CHECK ENGINE**" warning light is not properly operating (light is illuminated or is not working due to a burned out bulb) or there is one or more diagnostic trouble codes stored in the vehicle's computer.
- A state emission inspection may reject (not pass or fail) a vehicle if the number of OBDII system readiness monitors "**NOT READY**" is greater than one. If the vehicle's battery has been recently replaced or disconnected, the OBDII system inspection may indicate that the vehicle is not ready for the emission test. Under this condition, the vehicle driver should be instructed to drive his/her vehicle for a few days to reset the readiness monitors and return for an emission re-inspection.
- Owners of rejected or failing vehicles should contact their SUBARU Dealer for service.

7-3. Preparing to Drive

You should perform the following checks and adjustments every day before you start driving.

1. Check that all windows, mirrors, and lights are clean and unobstructed.
2. Check the appearance and condition of the tires. Also check tires for proper inflation.
3. Look under the vehicle for any sign of leaks.
4. Check that no small animals enter the engine compartment.
5. Check that the hood and trunk are fully closed.
6. Check the adjustment of the seat.
7. Check the adjustment of the inside and outside mirrors.
8. Fasten your seatbelt. Check that your passengers have fastened their seatbelts.
9. Check the operation of the warning and indicator lights when the ignition switch is turned to the "ON" position.
10. Check the gauges, indicator and warning lights after starting the engine.

⚠ CAUTION

Small animals trapped in the cooling fan and belt of the engine may result in a malfunction. Check that no small animal enters the engine compartment and under the vehicle before starting the engine.

NOTE

Engine oil, engine coolant, brake fluid, washer fluid and other fluid levels should be checked daily, weekly or at fuel stops.

7-4. Starting and Stopping Engine

■ Safety Precautions

Refer to "Safety Precautions" ☞P96.

■ Operating Range for Push-Button Start System

Refer to "Operating Range for Push-Button Start System" ☞P129.

■ General Precautions When Starting Engine

⚠ WARNING

- **Never start the engine from outside the vehicle. It may result in an accident.**
- **Do not leave the engine running in locations with poor ventilation, such as a garage and indoors. The exhaust gas may enter the vehicle or indoors, and it may result in carbon monoxide poisoning.**
- **Do not start the engine near dry foliage, paper, or other flammable substances. The exhaust pipe and exhaust emissions can create a fire hazard at high temperatures.**

⚠ CAUTION

- **If the engine is stopped during driving, the catalyst may overheat and burn.**
- **When starting the engine, be sure to sit in the driver's seat.**

NOTE

- **It may be difficult to start the engine when the battery has been disconnected and reconnected (for maintenance or other purposes). This difficulty is caused by the electronically controlled throttle's self-diagnosis function. To overcome it, keep the ignition switch in the "ON" position for approximately 10 seconds before starting the engine.**
- **Avoid rapid racing and rapid acceleration immediately after the engine has started.**
- **After the engine starts, the engine speed will be kept high.**

– CONTINUED –

• On rare occasions, it may be difficult to start the engine depending on the fuel and the usage condition (repeated driving of a distance in which the engine has not warmed up sufficiently). In such a case, it is recommended that you change to a different brand of fuel.
• On rare occasions, transient knocking may be heard from the engine when the accelerator is operated rapidly such as a rapid start-up and a rapid acceleration. This is not a malfunction.
• The engine starts more easily when the headlights, air conditioner and rear window defogger are turned off.

■ Starting Engine

⚠ WARNING

- There are some general precautions when starting the engine. Carefully read the precautions described in "General Precautions When Starting Engine" ☞P233.
- If the steering lock cannot be released after the engine has started, never drive the vehicle. The steering is still locked, and it may result in an accident.

⚠ CAUTION

- If a system malfunction warning message is displayed on the combination meter, there may be a malfunction with the vehicle. Contact a SUBARU dealer immediately.
- If a steering lock warning message is displayed on the combination meter after the engine has started, it means that the steering is still locked. While moving the steering wheel right and left, depress the brake pedal, and press the push-button ignition switch.
- Do not continue pressing the push-button ignition switch for more than 10 seconds. Doing so could cause a malfunction. If the engine does not start, stop pressing the push-button ignition switch. Instead, press the push-button ignition switch without depressing the clutch pedal (MT models) or the brake pedal (AT models) to switch the power status to “OFF”. Wait 10 seconds, and then press the push-button ignition switch to start the engine.

NOTE

• When pressing the push-button ignition switch while depressing the clutch pedal (MT models) or the brake pedal (AT models):
  - The engine starter operates for a maximum of 10 seconds and after starting the engine, the starter stops automatically.
  - The engine can be started regardless of the power status.
• If the engine does not start, check the security indicator light. Then press the push-button ignition switch without depressing the clutch pedal (MT models) or the brake pedal (AT models) to switch the power to “OFF”.
  - If the light had illuminated, try to start the engine again.
  - If the light had been off, press the push-button ignition switch while depressing the clutch pedal (MT models) or the brake pedal (AT models) more forcefully.
• The engine start procedures may not function depending on the radio wave conditions around the vehicle. In such a case, refer to "Starting Engine" ☞P330.
• If the vehicle battery is discharged, the steering cannot be unlocked. Charge the battery.

• After the engine starts, the engine speed will be kept high.
• Do not shift the select lever (AT models) while the starter is cranking.

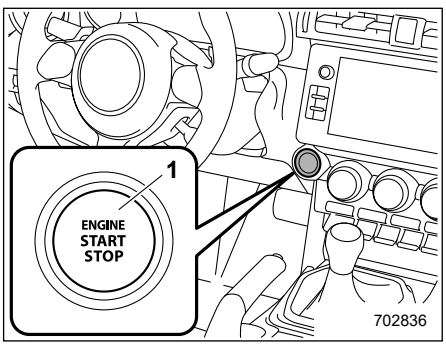

1) Push-button ignition switch

When the push-button ignition switch is pressed while depressing the clutch pedal (MT models) or the brake pedal (AT models), the engine will start. The starting procedure for the engine is as follows.

▼ MT models

1. Carry the access key fob, and sit in the driver's seat.
2. Apply the parking brake.
3. Shift the shift lever to neutral.
4. Depress the brake pedal and clutch pedal.
5. While depressing the clutch pedal, press the push-button ignition switch.

NOTE

In case the engine does not start by the normal engine start procedure, move the shift lever to the neutral position, and switch the power to "ACC". Depress the clutch pedal, and press the push-button ignition switch for at least 15 seconds. The engine may start. Only use this engine start procedure in case of emergency.

▼ AT models

1. Carry the access key fob, and sit in the driver's seat.
2. Apply the parking brake.
3. Make sure the select lever is in the "P" position. The engine can also start when the select lever is in the "N" position, however, for safety reasons, start in the "P" position.
4. Depress the brake pedal.
5. While depressing the brake pedal, press the push-button ignition switch.

NOTE

• In case the engine does not start by the normal engine start procedure, move the select lever to the "P" position, and switch the power to "ACC". Depress the brake pedal, and press the push-button ignition switch for at least 15 seconds. The engine may start. Only use this engine start procedure in case of emergency.
• When the engine is not started, the brake pedal may feel stiff. In such a case, depress the brake pedal more forcefully than usual. Press the push-button ignition switch to start the engine.

– CONTINUED –

■ Automatic Vehicle Shut Down Function

⚠ WARNING

- **The cooling function operates only when the engine is running.**
- **Do not leave children or adults who would normally require the support of others alone in your vehicle. Pets should not be left alone either. On hot, sunny days, temperatures in a closed vehicle could quickly become high enough to cause severe or possibly fatal injuries to people or animals.**

This vehicle has a function to automatically stop the engine if it is left in the following state for about 30 minutes while the engine is running.

- The select lever is in the “P” position (AT models).
- The vehicle is stopped.

If the engine stops automatically, the ignition switch turns to the “OFF” position.

▼ How to reset the timer of the Automatic Vehicle Shut Down function

If you want to continue running the engine, you can reset the timer of the Automatic Vehicle Shut Down function by doing any of the following operations.

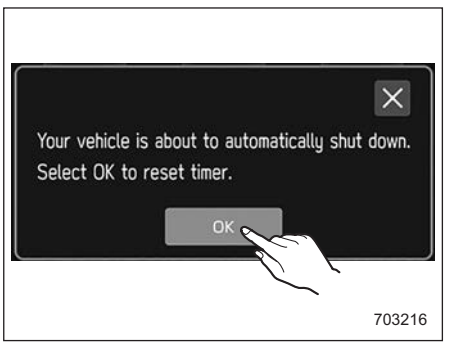

- Touch “OK” according to the message displayed in the center information display before the engine is automatically stopped.
- Depress the brake pedal.
- Depress the clutch pedal (MT models).
- Shift the select lever into a position other than the “P” position (AT models).

If you reset the Automatic Vehicle Shut Down Function, it will reactivate after approximately 30 minutes have passed.

▼ How to deactivate the Automatic Vehicle Shut Down function

The Automatic Vehicle Shut Down function can be temporarily disabled using the center information display settings. For details, refer to "Car settings" ☞P169. If you disable the Automatic Vehicle Shut Down function, it will not work and the engine will continue to run.

The Automatic Vehicle Shut Down function will be enabled the next time you turn the ignition switch to the “OFF” position and restart the engine.

■ Stopping Engine

1. Stop the vehicle completely.
2. Move the shift lever to neutral (MT models) or select lever to the “P” position (AT models).
3. Press the push-button ignition switch. The engine will stop, and the power will be switched off.

⚠ WARNING

- **Do not touch the push-button ignition switch during driving.**

  When the push-button ignition switch is operated as follows, the engine will stop.

  –The switch is pressed and held for 2 seconds or longer.

  –The switch is pressed briefly 3 times or more in succession.

  When the engine stops, the brake booster will not function. A greater foot pressure will be required on the brake pedal.

  The power steering system will not operate either. A greater force will be required to steer, and it may result in an accident.

- **If the engine stops during driving, do not operate the push-button ignition switch or open any of the doors until the vehicle is stopped in a safe location. It is dangerous because the steering lock may be activated. Stop the vehicle in a safe place, and contact a SUBARU dealer immediately.**

⚠ CAUTION

For AT models:

- **Do not stop the engine while the select lever is in a position other than the “P” position.**
- **If the engine is stopped while the select lever is in a position other than the “P” position, the power will be in “ACC”. If the vehicle is left in this condition, the battery may be discharged.**

NOTE

Although you can stop the engine by operating the push-button ignition switch, do not stop the engine during driving except in an emergency.

■ When Access Key Fob Does Not Operate Properly

Refer to "Access Key Fob – If Access Key Fob Does Not Operate Properly" ☞P329.

■ Steering Lock

After stopping the engine and any door is opened, the steering wheel will be locked due to the steering lock function.

When the engine is restarted, the steering lock will be automatically released.

– CONTINUED –

▼ **When the steering lock cannot be released**

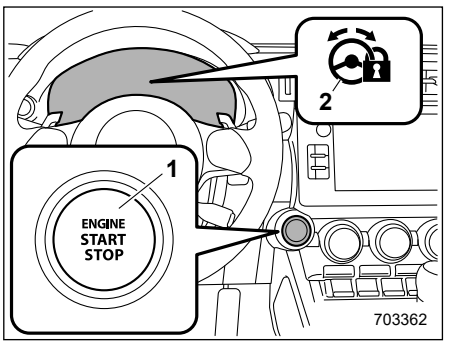

1) Push-button ignition switch
2) Steering lock warning indicator

When you cannot restart the engine due to the steering lock, the steering lock warning indicator will illuminate. Perform the following steps.

▽ **How to released steering lock**

1. Check that the shift lever is set in neutral (MT models) or select lever is set in the “P” position (AT models).
2. Depress the brake pedal and keep it.
3. Press the push-button ignition switch while turning the steering wheel left and right.

▽ **When the display of warning messages**

There may be a malfunction in the steering lock function. Immediately contact your nearest SUBARU dealer.

7-5. Manual Transmission

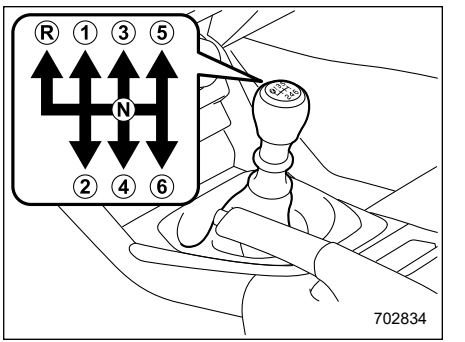

This manual transmission is a completely synchromesh, 6-forward-speed and 1-reverse-speed transmission.

The shift pattern is shown on the shift lever knob.

To change the shift lever position:

1. Depress the clutch pedal.
2. To shift into all positions other than “R”, move the shift lever accordingly.

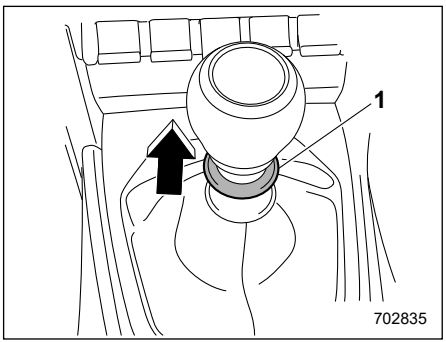

1) Slider

3. To shift into the “R” position, hold up the slider, move the lever to the “R” position, then release the slider.

4. Gradually release the clutch pedal.

If it is difficult to shift into gear, put the transmission in neutral, release the clutch pedal momentarily, and then try again.

⚠ WARNING

- **Do not drive the vehicle with the clutch disengaged (i.e., when the clutch pedal is depressed) or with the shift lever in the neutral position. Engine braking has no effect in either of these conditions and the risk of an accident is consequently increased.**
- **Do not engage the clutch (i.e., release the clutch pedal) suddenly when starting the vehicle. By doing so the vehicle might unexpectedly accelerate or the transmission could malfunction.**

⚠ CAUTION

- **Shift into reverse ONLY when the vehicle has completely stopped. It may cause damage to the transmission to try shifting into reverse when the vehicle is moving.**
- **Do not shift the shift lever without depressing the clutch pedal.**

■ Shifting Speeds

▼ Recommended shifting speeds

The best compromise between fuel economy and vehicle performance during normal driving is ensured by shifting up at the speeds listed in the following table.

Shift up	mph (km/h)
1st to 2nd	15 (24)
2nd to 3rd	25 (40)
3rd to 4th	40 (64)
4th to 5th	45 (72)
5th to 6th	50 (80)

▼ Gear shift indicator

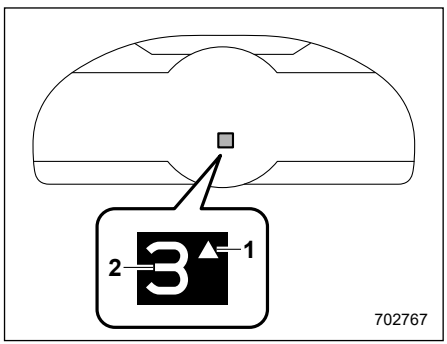

1) Upshift indicator
2) Gear position indicator

The gear position indicator shows the position of the shift lever.

When shifting up is recommended for good fuel economy, the upshift indicator blinks.

The gear shift indicator can be activated or deactivated. The default setting is deactivated. For details, refer to "Settings Display" ☞P161.

– CONTINUED –

■ Driving Tips

⚠ WARNING

When shifting down a gear, ensure that the engine speed does not enter the red zone. Failure to observe this precaution can lead to engine over-revving and this in turn can result in engine damage.

In addition, sudden application of engine brakes when the vehicle is travelling on a slippery surface can lead to wheel locking; as a consequence, control of the vehicle may be lost and the risk of an accident increased.

NOTE

If the accelerator and brake pedals are depressed at the same time, driving torque may be restrained. This is not a malfunction.

Do not drive with your foot resting on the clutch pedal and do not use the clutch to hold your vehicle at a standstill on an upgrade. Either of those actions may cause clutch damage.

Do not drive with your hand resting on the shift lever. This may cause wear on the transmission components.

When it is necessary to reduce vehicle speed due to slow traffic, turning corners, or driving up steep hills, downshift to a lower gear before the engine starts to labor.

On steep downgrades, downshift the transmission to 5th, 4th, 3rd or 2nd gear as necessary; this helps to maintain a safe speed and to extend brake pad life.

In this way, the engine provides a braking effect. Remember, if you “ride” (over use) the brakes while descending a hill, they may overheat and not work properly.

The engine may, on rare occasions, knock when the vehicle rapidly accelerates or rapidly pulls away from a standstill. This phenomenon is not an indication of a problem in your vehicle.

With the exception of cases where sudden acceleration is required, do not drive the vehicle with the pointer of the tachometer inside the red area. Failure to observe this precaution can lead to excessive engine wear and poor fuel economy.

7-6. Automatic Transmission

The automatic transmission is electronically controlled and provides 6 forward speeds and 1 reverse speed. It also has a manual mode.

⚠ WARNING

Do not shift from the “P” or “N” position into the “D” or “R” position while depressing the accelerator pedal. This may cause the vehicle to lurch forward or backward.

⚠ CAUTION

- **Observe the following precautions. Failure to observe these precautions could cause damage to the transmission.**
  - **Shift into the “P” or “R” position only after the vehicle has completely stopped.**
  - **Do not shift from the “D” position into the “R” position or vice versa until the vehicle has completely stopped.**

- **Do not race the engine for more than 5 seconds in any position except the “N” or “P” position when the brake is applied or when chocks are used in the wheels. This may cause the transmission fluid to overheat.**
- **Never move the vehicle rearward by inertia with the select lever set in a forward driving position or move the vehicle forward by inertia with the select lever set in the “R” position. Doing so may result in an unexpected accident or malfunction.**
- **When parking the vehicle, first securely apply the parking brake and then place the select lever in the “P” position. Do not park for a long time with the select lever in any other position as doing so could result in a dead battery.**

NOTE

• When the engine coolant temperature is still low, the transmission will shift at higher engine speeds than when the coolant temperature is sufficiently high in order to shorten the warm-up time and improve driveability. The gearshift timing will automatically shift to the normal timing after the engine has warmed up.

• Immediately after transmission fluid is replaced, you may feel that the transmission operation is somewhat unusual. This results from invalidation of data which the on-board computer has collected and stored in memory to allow the transmission to shift at the most appropriate times for the current condition of your vehicle. Optimized shifting will be restored as the vehicle continues to be driven for a while.

• Place the shift boot to the original position after it is lifted. If the shift lever is operated with the shift boot in the rolled up position, the shift boot may have tension and it may disturb the shift lever operation.

• When the vehicle is idling at high rpm in order to warm up, and the vehicle is on a slippery road, the transmission may automatically shift to 2nd gear for stopping and starting off.

■ Select Lever

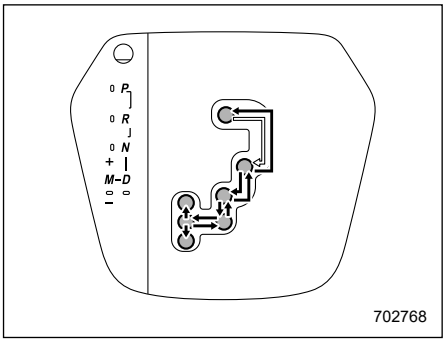

⇨: Shift with the brake pedal depressed and push-button ignition switch in the “ON” position. When shifting between “P” and “D”, depress the brake pedal and securely stop the vehicle before shifting.

The select lever has four positions, “P”, “R”, “N”, “D” and also has a manual gate for using the manual mode.

NOTE

To protect the engine while the select lever is in the “P” or “N” position, the engine is controlled so that the engine speed may not become too high even if the accelerator pedal is depressed hard.

– CONTINUED –

▼ P (Park)

This position is for parking the vehicle and starting the engine. In this position, the transmission is mechanically locked to prevent the vehicle from rolling freely.

When you park the vehicle, first apply the parking brake, then shift into the “P” position. Do not hold the vehicle with only the mechanical friction of the transmission.

To shift the select lever from the “P” to any other position, you should depress the brake pedal fully then move the select lever. This prevents the vehicle from lurching when it is started.

▼ R (Reverse)

This position is for backing the vehicle. To shift from the “N” to “R” position, stop the vehicle completely then move the lever to the “R” position.

▼ N (Neutral)

This position is for restarting a stalled engine. In this position, the transmission is neutral, meaning that the wheels and transmission are not locked. Therefore, the vehicle will roll freely, even on the slightest incline unless the parking brake or foot brake is applied.

⚠ WARNING

Do not drive the vehicle with the select lever in the “N” (neutral) position. Engine braking has no effect in this condition and the risk of an accident is consequently increased.

▼ D (Drive)

This position is for normal driving. The transmission shifts automatically into a suitable gear according to the vehicle speed and the acceleration you require. Also, while driving up and down a hill, the transmission assists and controls the driving performance and engine braking while corresponding to the road grade.

When more acceleration is required in “D” position, depress the accelerator pedal fully to the floor and hold that position. The transmission will automatically downshift. When you release the pedal, the transmission will return to the original gear position.

To use the manual mode, move the lever from this position into the manual gate.

If one of the shift paddles behind the steering wheel is operated while driving in the “D” position, the transmission will temporarily switch to the manual mode. In this mode, you can shift into any gear position using the shift paddles. For details about the manual mode, refer to "Selection of Manual Mode" ☞P244. Once the vehicle speed stabilizes, the transmission will switch from the manual mode back to the “D” position for normal driving.

▽ While climbing a grade

When driving up a hill, undesired upshift is prevented from taking place when the accelerator is released. This minimizes the chance of subsequent downshifting to a lower gear when accelerating again. This prevents repeated upshifting and downshifting resulting in a smoother operation of the vehicle.

NOTE

The transmission may downshift, depending on the way the accelerator pedal is depressed to accelerate the vehicle again.

■ Adaptive Control

In order to realize smoother driving while driving in “D” position, an appropriate gear is automatically selected by limiting upshifting and performing downshifting operations according to driver operations and driving conditions.

- When driving uphill, prevents unnecessary upshifting and downshifting.
- When driving downhill, downshifting is performed at engine speeds higher than usual.
- When driving on curves, prevents upshifting even when accelerating.
- When the brake pedal is depressed firmly, downshifting is automatically performed, fully utilizing engine braking.
- When the accelerator pedal is suddenly released, prevents upshifting.

NOTE

Adaptive control operates automatically when the select lever is in the “D” position. The function is canceled when the paddle shift levers are operated or the select lever is shifted to the “M” position.

■ Shift Lock Function

The shift lock function helps prevent the improper operation of the select lever.

- The select lever cannot be operated unless the ignition switch is turned to the “ON” position and the brake pedal is depressed.
- The select lever cannot be moved from the “P” position to any other position before the brake pedal is depressed. Depress the brake pedal first, and then operate the select lever.
- Only the “P” position allows you to turn the push-button ignition switch to the “OFF” position.

▼ Shift lock release

If the select lever cannot be operated, turn the ignition switch back to the “ON” position then move the select lever to the “P” position with the brake pedal depressed.

If the select lever does not move after performing the above procedure, refer to "Shift lock release using the shift lock release portion" ☞P243.

▼ Shift lock release using the shift lock release portion

Perform the following procedure to release the shift lock.

1. Apply the parking brake and stop the engine.

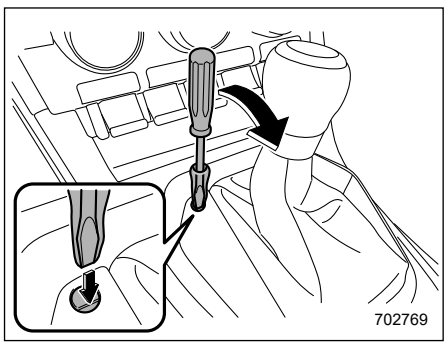

2. Using a flathead screwdriver, remove the cover. To prevent damage to the vehicle, wrap the tip of the flathead screwdriver with a rag, etc.

– CONTINUED –

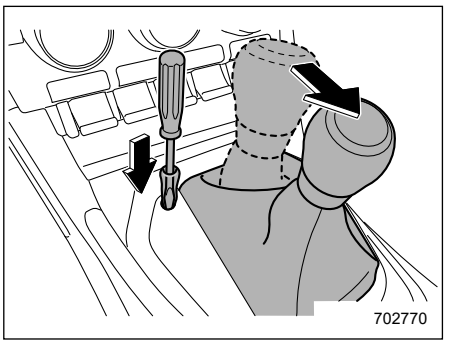

3. While depressing the brake pedal, insert the screwdriver into the hole, press the shift lock release portion using the screwdriver, and then move the select lever.

If the select lever does not move after performing the above procedure, the shift lock system may be malfunctioning. Contact a SUBARU dealer for an inspection as soon as possible.

■ Selection of Manual Mode

▼ Selecting gears in manual mode

Shift the select lever to the “M” position to change to manual mode.

When the upshift/downshift indicators are illuminated, the vehicle can be driven in a selected gear by shifting the select lever toward “-” or “+” or operating the “-” or “+” shift paddle.

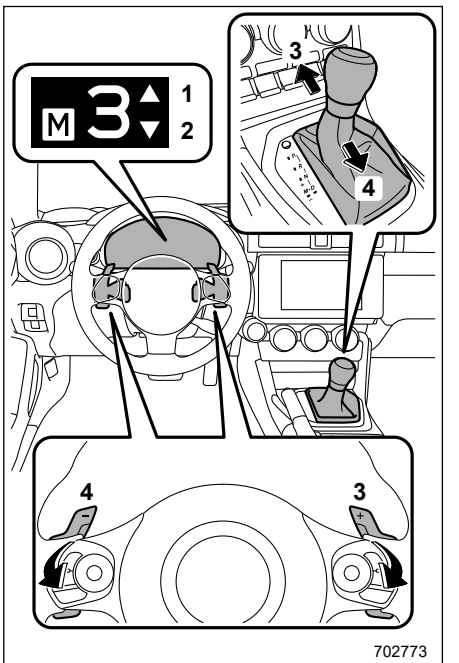

1) Upshift indicator
2) Downshift indicator
3) Upshift
4) Downshift

The gear changes once each time the select lever or a shift paddle is operated. The selected gear, from “M1” to “M6”, will be displayed on the combination meter.

When in manual mode, the gear will not change unless the select lever or a shift paddle is operated, except in the following situations.

- When the vehicle speed drops (downshift only)
- When the engine oil temperature is high and the engine speed approaches close to the red zone

If an upshift is attempted while the vehicle speed is low, the gear will not be changed.

⚠ CAUTION

Do not place or hang anything on the shift paddles. Doing so may result in accidental gear shifting.

NOTE

- If a downshift is attempted at a vehicle speed where a downshift is not possible (when the engine speed would enter the red zone if a downshift is performed), the downshift warning buzzer will sound to inform the driver that a downshift cannot be performed.

- You can perform a skip-shift (for example, from 4th to 2nd) by operating

the shift paddle twice in rapid succession.

• If the temperature of the transmission fluid becomes too high, the "AT OIL TEMP" warning light will illuminate. Immediately stop the vehicle in a safe place and let the engine idle until the warning light turns off.

▼ Temporary manual mode driving

While driving with the select lever in "D", if a shift paddle is operated, the gear can temporarily be selected. In this case, "M" and the selected gear number will be displayed on the combination meter. (If the engine speed approaches close to the red zone, an upshift will automatically be performed.)

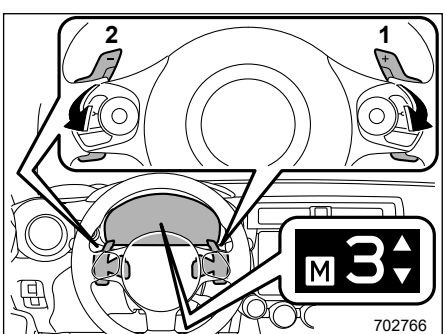

1) Upshift
2) Downshift

The selected gear, from "M1" to "M6", will be displayed on the combination meter.

NOTE

• In the following situations, temporary manual mode will be cancelled.
- When the vehicle speed is low
- When the accelerator pedal is depressed continuously for a certain amount of time or more
- When the accelerator pedal is depressed heavily
- When the select lever is shifted to a position other than "D"
- When the "+" shift paddle switch is held down for a period of time

When a downshift is attempted at a vehicle speed where a downshift is not possible (when the engine speed would enter the red zone if a downshift is performed), the downshift warning buzzer will sound to inform the driver that a downshift cannot be performed.

■ Driving Tips

NOTE

If the accelerator and brake pedals are depressed at the same time, driving torque may be restrained. This is not a malfunction.

• On a road surface where there is a risk of wheelspin (for example, a snow- or gravel covered road), you can start off from a standstill safely and easily by first selecting Snow mode.

• Always apply the foot or parking brake when the vehicle is stopped in the "D" or "R" position.

• Make sure to apply the parking brake when parking your vehicle. Do not hold the vehicle with only the transmission.

• Do not keep the vehicle in a stationary position on an uphill grade by using the "D" position. Use the brake instead.

• The engine may, on rare occasions, knock when the vehicle rapidly accelerates or rapidly pulls away from a standstill. This phenomenon does not indicate a malfunction.

7-7. Driving Mode Select Switch

By pressing the driving mode select switch the following modes can be selected to suit driving and usage conditions:

■ Normal Mode

Provides an optimal balance of fuel economy, quietness, and dynamic performance. Suitable for normal driving.

■ Sport Mode

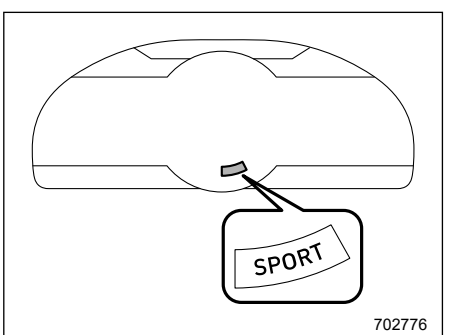

The Sport mode indicator light comes on.

Use Sport mode for sporty driving or when driving in mountainous regions with lots of curves.

For AT models, if the mode is changed to Sport mode while driving with the select lever in the “D” position, the selected gear, from “D1” to “D6”, will be displayed on the meter.

NOTE

- **In Sport mode, lower gears are used and gears change at a higher engine speed. (AT models)**
- **Selecting Sport mode should only be performed when the vehicle is stationary or when the accelerator pedal is released. Changing to Sport mode while accelerating may cause the vehicle to vibrate because of the enhanced responsiveness and acceleration performance of the sport mode. (MT models)**
- **Sport mode cannot be changed to when driving with cruise control activated.**
- **While the engine is cool, you cannot change to Sport mode.**
- **If tire slip is detected on a slippery road surface while in Sport mode, Sport mode may be cancelled. (AT models)**

■ Snow Mode (AT models)

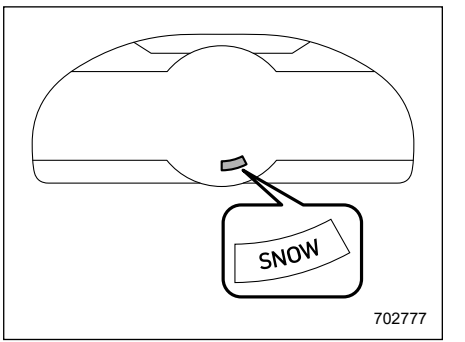

The Snow mode indicator light comes on.

Use Snow mode for accelerating and driving on slippery road surfaces such as snow.

NOTE

To prevent slipping, 1st gear cannot be selected when in Snow mode.

■ Driving Mode Select Switch

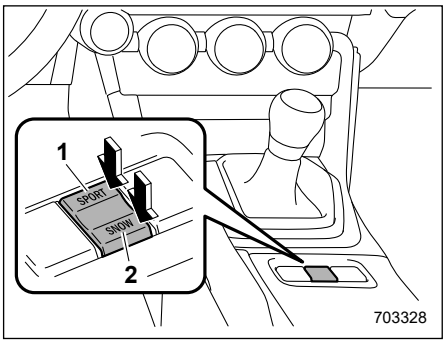

1) SPORT switch
2) SNOW switch (AT models)

- To select the Sport mode, press the SPORT switch.
- To select the Snow mode, press the SNOW switch. (AT models)

To cancel Sport mode or Snow mode, press the same side of the switch again.

NOTE

In the following situations, the driving mode will automatically change to normal mode:

- **When the engine is turned off after driving in Sport mode or Snow mode (AT models).**
- **When cruise control is activated while driving in Sport mode.**
- **If a malfunction occurs in the engine or automatic transmission electrical control system (AT models) while Sport mode or Snow mode (AT models) is selected.**
- **When in Sport mode and the idling speed is high during warm-up or when the road surface is slippery and stopping/starting off is automatically performed in second gear. (AT models)**

7-8. Active Sound Control

The active sound control provides dynamic engine sounds. When driving with Sport mode selected, the engine sounds will be particularly loud.

NOTE

The operational/non-operational setting of the Active Sound Control can be changed by a SUBARU dealer. Contact your SUBARU dealer for details.

When the driving mode is changed, the sound of the active sound control will be stopped for approximately 1 second, this is not a malfunction.

7-9. Power Steering

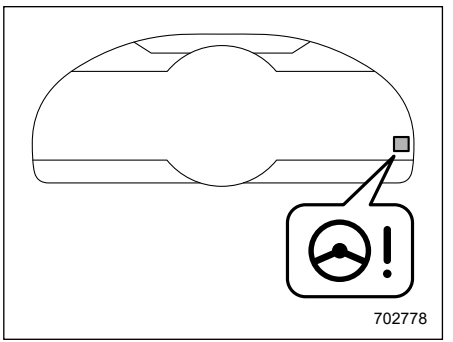

Power steering warning light

The vehicle is equipped with an electric power steering system. When the ignition switch is turned to the “ON” position, the power steering warning light on the combination meter illuminates to inform the driver that the warning system is functioning properly. Then, if the engine started, the warning light turns off to inform the driver that the steering power assist is operational.

⚠ CAUTION

- **When the power steering warning light is illuminated, there may be more resistance when the steering wheel is operated.**
- **When the power steering warning light remains on or an interrupt screen was displayed, drive carefully to the nearest SUBARU dealer and have the vehicle inspected immediately.**

NOTE

If the steering wheel is operated in the following ways, the power steering control system may temporarily limit the power assist in order to prevent the system components, such as the control computer and drive motor, from overheating.

- **The steering wheel is operated frequently and turned sharply while the vehicle is maneuvered at extremely low speeds, such as while frequently turning the steering wheel during parallel parking.**
- **The steering wheel remains in the fully turned position for a long period of time.**

At this time, there will be more resistance when steering. However this is not a malfunction. Normal steering force will be restored after the steering wheel is not operated for a while and the power steering control system has an opportunity to cool down. However, if the power steering is operated in a non-standard way which causes power assist limitation to occur too frequently, this may result in a malfunction of the power steering control system.

7-10. Braking

■ Braking Tips

⚠ WARNING

Never rest your foot on the brake pedal while driving. This can cause dangerous overheating of the brakes and needless wear on the brake pads.

▼ When the brakes get wet

When driving in rain or after washing the vehicle, the brakes may get wet. As a result, brake stopping distance will be longer. To dry the brakes, drive the vehicle at a safe speed while lightly depressing the brake pedal to heat up the brakes.

▼ Use of engine braking

Remember to make use of engine braking in addition to foot braking. When descending a grade, if only the foot brake is used, the brakes may start working improperly because of brake fluid overheating, caused by overheated brake pads. To help prevent this, shift into a lower gear to get stronger engine braking.

▼ Braking when a tire is punctured

Do not depress the brake pedal suddenly when a tire is punctured. This could cause a loss of control of the vehicle. Keep driving straight ahead while gradually reducing speed. Then slowly pull off the road to a safe place.

■ Brake System

▼ Two separate circuits

Your vehicle has a dual circuit brake system. Each circuit works diagonally across the vehicle. If one circuit of the brake system should fail, the other half of the system still works. If one circuit fails, the brake pedal will go down much closer to the floor than usual and you will need to press it down much harder. And a much longer distance will be needed to stop the vehicle.

▼ Brake booster

The brake booster uses vacuum pump system to assist braking force. Do not turn off the engine while driving because that will turn off the brake booster, resulting in poor braking power.

The brakes will continue to work even when the brake booster completely stops functioning. If this happens, however, you will have to depress the pedal much harder than normal and the braking distance will increase.

▼ Supplemental booster function when vacuum pressure fails

While the ignition switch is turned “ON” and the engine is running, the supplemental booster function operates when the brake booster performance is decreased due to insufficient vacuum boost.

When the brake pedal is depressed while the supplemental booster function is operating, an operation sound and brake pedal vibration may be generated. This is not a malfunction.

▼ Brake assist system

⚠ WARNING

Do not be overconfident about the brake assist. It is not a system that brings more braking ability to the vehicle beyond its braking capability. Always use the utmost care when driving regarding vehicle speed and safe distance.

– CONTINUED –

⚠ CAUTION

When you need to brake suddenly, continue depressing the brake pedal strongly to bring the effect of the brake assist.

Brake assist is a driver assistance system. It assists the brake power when the driver cannot depress the brake pedal strongly and the brake power is insufficient.

Brake assist generates the brake power according to the speed at which the driver depresses the brake pedal.

NOTE

When you depress the brake pedal strongly or suddenly, the following phenomena occur. However, even though these occur, they do not indicate any malfunctions, and the brake assist system is operating properly.

- **You might feel that the brake pedal is applied by lighter force and generates a greater braking force.**
- **You might hear the sound of ABS operating from the engine compartment.**

■ Disc Brake Pad Wear Warning Indicators

⚠ WARNING

It is dangerous to drive the vehicle when the wear limits of the brake pads and/or those of the brake discs are exceeded. Doing so could result in an accident.

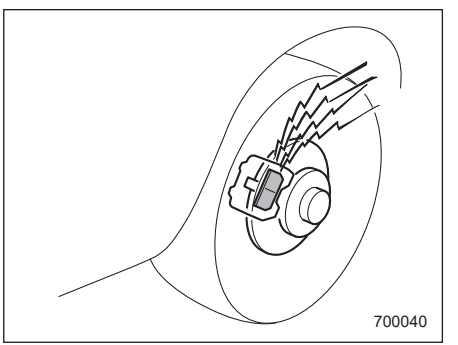

The disc brake pad wear warning indicators on the disc brakes give a warning noise when the brake pads are worn.

If you hear a squealing or scraping noise, we recommend that you have the brake pads checked and replaced by your SUBARU dealer as soon as possible. Brake disc damage may result if the pads are not replaced when needed.

■ High performance brake system (Brembo equipped models)

Your vehicle is equipped with a high performance brake system that provides optimum braking force under various driving conditions. The brake system has the following characteristics.

Brake noises

The brake pads are made of iron-based material. Therefore, unusual noise may be heard when depressing the brake pedal slightly before stopping completely. However, this does not indicate a malfunction.

Discoloration

Frequent severe driving, such as repeated driving on sharp uphill or downhill grades, can cause discoloration of the paint on the brake calipers. The discoloration will not affect the braking performance.

Stuck brake pads

- If the vehicle is left parked for an extended period of time with the brake system wet, the iron in the brake pads may form rust and cause the brake pads and disc rotors to stick together. This may

result in noise or vibration while driving. If this occurs, fully depress the brake pedal several times to free the brake pads.

- If the vehicle is left parked for an extended period of time in a cold temperature, the brake pads and disc rotors may be frozen and stuck together. In this case, it may be difficult to start the vehicle.

Brake dust

Due to the material used for the brake pads, the wheels may become covered in brake dust. This is not a malfunction, and will not affect the brake performance.

7-11. ABS (Anti-Lock Brake System)

⚠ WARNING

Always use the utmost care in driving – overconfidence because you are driving with an ABS equipped vehicle could easily lead to a serious accident.

⚠ CAUTION

- **The ABS does not always decrease stopping distance. You should always maintain a safe following distance from other vehicles.**
- **When driving on badly surfaced roads, gravel roads, icy road, or over newly fallen snow, stopping distances may be longer for a vehicle with the ABS than one without. When driving under these conditions, therefore, reduce your speed and leave ample distance from other vehicles.**
- **When you feel the ABS operating, you should maintain constant brake pedal pressure. Do not pump the brake pedal since doing so may defeat the operation of the ABS.**

The ABS prevents the lock-up of wheels which may occur during sudden braking or braking on slippery road surfaces. This helps prevent the loss of steering control and directional stability caused by wheel lock-up.

When the ABS is operating, you may hear a chattering noise or feel a slight vibration in the brake pedal. This is normal when the ABS operates.

■ ABS Self-Check

You may feel a slight shock in the brake pedal and hear the operating noise of the ABS from the engine compartment just after the vehicle is started. This is caused by an automatic functional test of the ABS being carried out and does not indicate any abnormal condition.

■ ABS Warning Light

Refer to "ABS Warning Light" ☞P144.

7-12. Electronic Brake Force Distribution (EBD) System

The EBD system maximizes the effectiveness of the brakes by allowing the rear brakes to supply a greater proportion of the braking force. It functions by adjusting the distribution of braking force to the rear wheels in accordance with the vehicle's loading condition and speed.

The EBD system is an integral part of the ABS and uses some of the ABS components to perform its function of optimizing the distribution of braking force. If any of the ABS components used by the EBD function fails, the EBD system also stops working.

When the EBD system is operating, you may hear a chattering noise or feel a slight vibration in the brake pedal. This is normal and does not indicate a malfunction.

■ EBD System Malfunctions

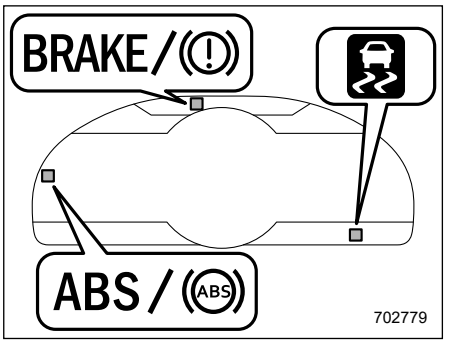

If a malfunction occurs in the EBD system, the system stops working and the following warning lights illuminate simultaneously.

- Brake system warning light
- ABS warning light
- Vehicle Stability Control (VSC) warning light

If all the warning lights remain on even though the parking brake is released, the brake fluid level may be low or there could be a problem with the EBD system. Park the vehicle in a safe place immediately and contact an SUBARU dealer.

⚠ WARNING

- **Driving with the brake system warning light on is dangerous. This indicates your brake system may not be working properly. If the light remains on, have the brakes inspected by a SUBARU dealer immediately.**
- **If at all in doubt about whether the brakes are operating properly, do not drive the vehicle. Have your vehicle towed to the nearest SUBARU dealer for repair.**

7-13. Vehicle Stability Control (VSC)/TRAC System

■ Vehicle Stability Control (VSC) System

In the event of wheelspin and/or skidding on a slippery road surface and/or during cornering and/or an evasive maneuver, the Vehicle Stability Control (VSC) system adjusts the engine's output and the wheels' respective braking forces to help maintain traction and directional control. The skid suppression function is designed to help maintain directional stability by suppressing the wheels' tendency to slide sideways during steering operations. Activation of this function is indicated by flashing of the Vehicle Stability Control (VSC) operation indicator light.

NOTE

• In the following circumstances, the vehicle may be less stable than it feels to the driver. The Vehicle Stability Control (VSC) system may therefore operate. Such operation does not indicate a system malfunction.

- On gravel-covered or rutted roads
- On unfinished roads
- When the vehicle is fitted with snow tires or winter tires

• Activation of the Vehicle Stability Control (VSC) system will cause operation of the steering wheel to feel slightly different compared to that for normal conditions.

• It is always important to reduce speed when approaching a corner, even if the vehicle is equipped with Vehicle Stability Control (VSC) system.

• Always turn off the engine before replacing a tire as failure to do so may render the Vehicle Stability Control (VSC) system unable to operate correctly.

■ TRAC System

The TRAC system is designed to prevent spinning of the driving wheels on slippery road surfaces, thereby helping to maintain traction and directional control. Activation of this function is indicated by flashing of the Vehicle Stability Control (VSC) operation indicator light. The TRAC system is also equipped with the brake LSD function.

⚠ WARNING

- **Directional control and power may not be achievable while driving on slippery road surfaces, even if the TRAC system is operating. Do not drive the vehicle in conditions where stability and power may be lost.**
- **Always use the utmost care in driving – overconfidence because you are driving with a Vehicle Stability Control (VSC) system and TRAC system equipped vehicle could easily lead to a serious accident.**

⚠ CAUTION

- **Even if your vehicle is equipped with Vehicle Stability Control (VSC) system and TRAC system, winter tires should be used when driving on snow-covered or icy roads; in addition, vehicle speed should be reduced considerably. Simply having a Vehicle Stability Control (VSC) system and TRAC system does not guarantee that the vehicle will be able to avoid accidents in any situation.**

– CONTINUED –

- **Activation of the Vehicle Stability Control (VSC) system and TRAC system is an indication that the road being travelled on has a slippery surface; since having Vehicle Stability Control (VSC) and TRAC is no guarantee that full vehicle control will be maintained at all times and under all conditions, its activation should be seen as a sign that the speed of the vehicle should be reduced considerably.**
- **Whenever suspension components, steering components, or an axle are removed from a vehicle equipped with the Vehicle Stability Control (VSC) system and TRAC system, have an inspection of that system performed by an authorized SUBARU dealer.**
- **The following precautions should be observed in order to ensure that the Vehicle Stability Control (VSC) system and TRAC system is operating properly.**
  - **All four wheels should be fitted with tires of the same size, type, and brand. Furthermore, the amount of wear should be the same for all four tires.**
  - **Keep the tire pressure at the proper level as shown on the label attached to the driver's side center pillar.**
- **If non-matching tires are used, the Vehicle Stability Control (VSC) system and TRAC system may not operate correctly.**

NOTE

The Vehicle Stability Control (VSC) system and TRAC system may be considered normal when the following conditions occur.

- **Slight twitching of the brake pedal is felt.**
- **The vehicle or steering wheel shakes to a small degree.**
- **An operating noise from the engine compartment is heard briefly when starting the engine and when driving off after starting the engine.**
- **The brake pedal seems to jolt when driving off after starting the engine.**

■ Vehicle Stability Control (VSC) System Monitor

Refer to "Vehicle Stability Control (VSC) Warning Light/Vehicle Stability Control (VSC) Operation Indicator Light" ☞P146 and "Vehicle Stability Control (VSC) OFF Indicator Light" ☞P147.

■ Vehicle Stability Control (VSC) OFF Switch

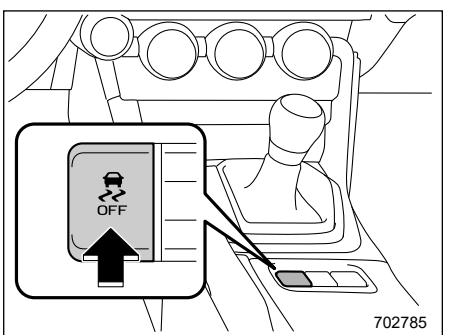

▼ Disabling the TRAC System

If the vehicle gets stuck in mud, dirt or snow, the TRAC system may reduce power from the engine to the wheels. Pressing the Vehicle Stability Control (VSC) OFF switch to turn the system off may make it easier for you to rock the

vehicle in order to free it. In this case, the brake LSD function remains on. To turn the TRAC system off, quickly press and release the button. The TRAC OFF indicator light will come on. Press the button again to turn the system back on.

Creating adequate driving wheel slip by deactivating the TRAC system may help to recover from the loss of traction. Use the Vehicle Stability Control (VSC) OFF switch as necessary.

- A standing start on a steeply sloping road with a snowy, gravel-covered, or otherwise slippery surface
- Extrication of the vehicle when its wheels are stuck in mud or deep snow

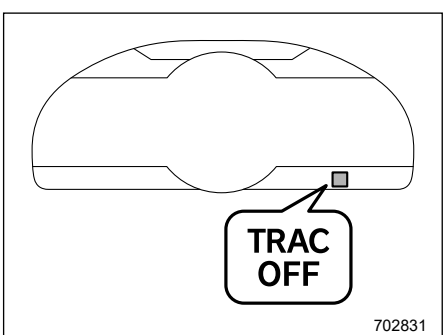

▼ Turning Off both Vehicle Stability Control (VSC) and TRAC Systems

To turn the Vehicle Stability Control (VSC) systems and TRAC system off, with the vehicle stationary, deactivate the TRAC system or select TRACK mode, and then press and hold the Vehicle Stability Control (VSC) OFF switch for more than 3 seconds. The TRAC OFF indicator light and the Vehicle Stability Control (VSC) OFF indicator light will come on. However, on vehicles with an automatic transmission, the brake LSD function will remain on. Press the button again to turn the systems back on. With the Vehicle Stability Control (VSC) system and TRAC system deactivated, traction and stability enhancement offered by Vehicle Stability Control (VSC) system and TRAC system is unavailable. Therefore you should not deactivate the Vehicle Stability Control (VSC) system and TRAC system except under above-mentioned situations.

NOTE

- When the switch has been pressed to deactivate the Vehicle Stability Control (VSC) system and TRAC system, the Vehicle Stability Control (VSC) system and TRAC system automatically reactivates itself the next time the ignition switch is turned to the "OFF" position and the engine is restarted.

- If the Vehicle Stability Control (VSC) OFF switch or TRACK switch is held down for 30 seconds or longer, the TRAC OFF indicator light and Vehicle Stability Control (VSC) OFF indicator light will turn off and any further operation of the Vehicle Stability Control (VSC) OFF switch and TRACK switch will be disabled.
In this case, the Vehicle Stability Control (VSC) system and TRAC system will operate in normal mode.
When the ignition switch is turned to "ACC" or "OFF" and then the engine is started again, the operation of the Vehicle Stability Control (VSC) OFF switch will be re-enabled.

- When the switch is pressed to deactivate the Vehicle Stability Control (VSC) system and TRAC system, the vehicle's running performance is comparable with that of a vehicle that does not have a Vehicle Stability Control (VSC) system and TRAC system. Do not deactivate the Vehicle Stability Control (VSC) system and TRAC system except when absolutely necessary.

- Even when the TRAC system is deactivated, components of the brake control system may still activate. When

– CONTINUED –

the brake control system is activated, the Vehicle Stability Control (VSC) operation indicator light flashes.

- **When in TRACK mode, pressing the Vehicle Stability Control (VSC) OFF switch to turn the Vehicle Stability Control (VSC) system and TRAC system off will temporarily change the meter to normal mode display. Keep pressing the switch and the meter will return to TRACK mode display.**

7-14. TRACK Mode

■ TRACK Mode

Your vehicle is equipped with two types of control modes to accommodate various driving preferences. The control modes can be selected with the TRACK switch. Normal mode allows secure and smooth normal driving. When the switch is pressed and held for 1 second or more, TRACK mode is activated. Control characteristics such as the Vehicle Stability Control (VSC) and TRAC are adjusted to afford maneuverability closer to what a driver may desire, while a sense of security is retained.

▼ TRACK mode/Normal mode

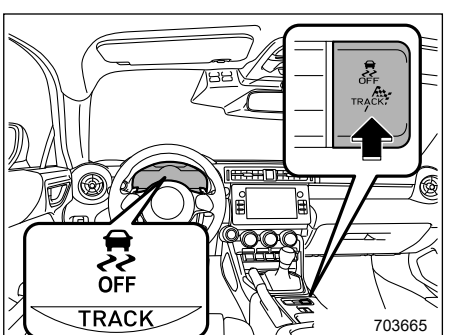

The TRACK indicator and Vehicle Stability Control (VSC) OFF indicator come on when in TRACK mode.

To change back to normal mode while in TRACK mode, press Vehicle Stability Control (VSC) OFF switch or the TRACK switch.

NOTE

For details about disabling the TRACK switch, refer to "Vehicle Stability Control (VSC) OFF Switch" ☞P255.

■ Selecting TRAC Mode and Vehicle Stability Control (VSC) Mode

Modes can be selected to suit your driving conditions as follows:

Driving conditions	TRAC modes	Vehicle Stability Control (VSC) modes	Brake LSD function	Indicator lights
Normal roads	Normal mode	Normal mode	Normal mode	—
Rough roads	Off	Normal mode	Normal mode	TRAC OFF
Sport driving	TRACK mode	TRACK mode	TRACK mode	OFF TRACK
	Off	Off	TRACK mode (AT models)	TRAC OFF OFF
			Off (MT models)	

NOTE

When the ignition switch is turned "OFF" position after driving in TRACK mode, the mode is automatically deactivated.

7-15. Tire Pressure Monitoring System (TPMS) (If Equipped)

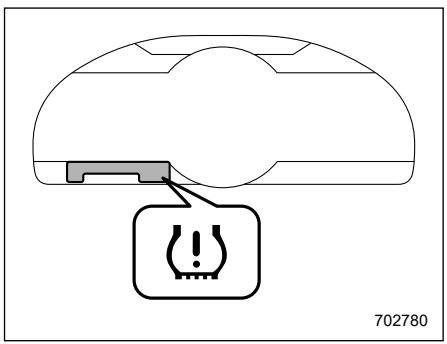

Low tire pressure warning light

The tire pressure monitoring system provides the driver with a warning message by sending a signal from a sensor that is installed in each wheel when tire pressure is severely low.

The tire pressure monitoring system will activate only when the vehicle is driven at speeds above 25 mph (40 km/h). Also, this system may not react immediately to a sudden drop in tire pressure (for example, a blow-out caused by running over a sharp object).

– CONTINUED –

⚠ WARNING

- **If the low tire pressure warning light illuminates while driving, never brake suddenly. Instead, perform the following procedure. Otherwise an accident involving serious vehicle damage and serious personal injury could occur.**
  - **(1) Keep driving straight ahead while gradually reducing speed.**
  - **(2) Slowly pull off the road to a safe place.**
  - **(3) Check the pressure for all four tires and adjust the pressure to the COLD tire pressure shown on the tire inflation pressure label on the center pillar on the driver's side.**
- **Even when the vehicle is driven a very short distance, the tires get warm and their pressures increase accordingly. Be sure to let the tires cool thoroughly before adjusting their pressures to the standard values shown on the tire inflation pressure label. Refer to "Tires and Wheels" ☞P364. The tire pressure monitoring system does not function when the vehicle is stationary. After adjusting the tire pressures, increase the vehicle speed to at least 25 mph (40 km/h) to start the TPMS rechecking of the tire inflation pressures. If the tire pressures are now above the severe low pressure threshold, the low tire pressure warning light should turn off a few minutes later.**

  If this light still illuminates while driving after adjusting the tire pressure, a tire may have significant damage and a fast leak that causes the tire to lose air rapidly. For details, refer to "Flat Tires" ☞P311.
- **When a replacement tire is mounted or a wheel rim is replaced without the original pressure sensor/transmitter being transferred, the low tire pressure warning light will illuminate steadily after blinking for approximately one minute. This indicates the TPMS is unable to monitor all four road wheels. Contact your SUBARU dealer as soon as possible for tire and sensor replacement and/or system resetting.**

- **When a tire is repaired with liquid sealant, the tire pressure warning valve and transmitter may not operate properly. If a liquid sealant is used, contact your nearest SUBARU dealer or other qualified service shop as soon as possible. Make sure to replace the tire pressure warning valve and transmitter when replacing the tire. You may reuse the wheel if there is no damage to it and if the sealant residue is properly cleaned off. Do not inject any tire liquid or aerosol tire sealant into the tires, as this may cause a malfunction of the tire pressure sensors. If the light illuminates steadily after blinking for approximately one minute, promptly contact a SUBARU dealer to have the system inspected.**

⚠ CAUTION

Do not place metal film or any metal parts under the driver's seat. This may cause poor reception of the signals from the tire pressure sensors, and the tire pressure monitoring system will not function properly.

■ Certification for the Receiver

FCC ID: HYQ23ABG

NOTE

This device complies with part 15 of the FCC Rules. Operation is subject to the following two conditions: (1) This device may not cause harmful interference, and (2) this device must accept any interference received, including interference that may cause undesired operation.

FCC WARNING

Changes or modifications not expressly approved by the party responsible for compliance could void the user's authority to operate the equipment.

■ Certification for the Transmitter

- **U.S.-spec. models**

FCC ID: PAXPMVE000

NOTE

This device complies with part 15 of the FCC Rules. Operation is subject to the following two conditions: (1) This device may not cause harmful interference, and (2) this device must accept any interference received, including interference that may cause undesired operation.

FCC WARNING

Changes or modifications not expressly approved by the party responsible for compliance could void the user's authority to operate the equipment.

- **Mexico-spec. models**

MEX: RLVPAPM17-1337

■ TPMS Screen

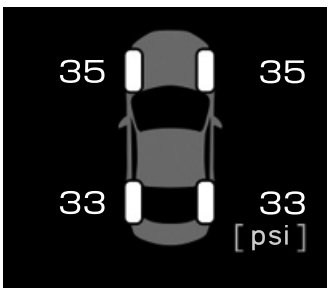

This screen displays each tire pressure. Refer to "Drive Information" ☞P157.

■ Initializing the Tire Pressure Monitoring System

When setting the tire inflation pressure above the specified level, initialize the tire pressure monitoring system.

When the tire pressure monitoring system is initialized, the current tire inflation pressure is set as the standard pressure.

■ How to Initialize the Tire Pressure Monitoring System (If Equipped)

1. Park the vehicle in a safe place and turn the ignition switch to the “OFF” position.

Initialization cannot be performed while the vehicle is moving.

2. Adjust the tire inflation pressure to the specified cold tire inflation pressure level. Refer to "Tires" ☞P393.

Make sure to adjust the tire pressure to the specified cold tire inflation pressure level. The tire pressure monitoring system will operate based on this pressure level.

3. Turn the ignition switch to the “ON” position.

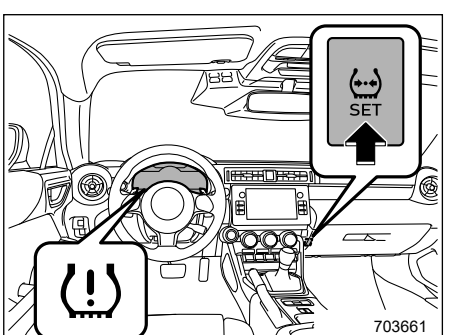

4. Press and hold the TPMS set switch until the low tire pressure warning light blinks slowly 3 times.

■ If You Press the Tire Pressure Monitoring Reset Switch Accidentally

If initialization is performed, adjust the tire inflation pressure to the specified level and initialize the tire pressure monitoring system again.

■ Initialization Procedure

- Make sure to carry out initialization after adjusting the tire inflation pressure. Also, make sure the tires are cold before carrying out initialization or tire inflation pressure adjustment.
- If you have accidentally turned the ignition switch to the “OFF” position during initialization, it is not necessary to press the TPMS set switch again as initialization will restart automatically when the engine is restarted.
- If you accidentally press the TPMS set switch when initialization is not necessary, adjust the tire inflation pressure to the specified level when the tires are cold, and conduct initialization again.

■ When Initialization of the Tire Pressure Monitoring System has Failed

Initialization can be completed in a few minutes. However, in the following case, the settings have not been recorded and the system will not operate properly. If repeated attempts to record tire inflation pressure settings are unsuccessful, have the vehicle checked at your SUBARU dealer.

- When operating the TPMS set switch, low tire pressure warning light does not blink 3 times.
- After carrying out the initialization procedure, the low tire pressure warning light blinks for 1 minute then stays on after driving for 20 minutes.

⚠ WARNING

Do not operate the TPMS set switch without first adjusting the tire inflation pressure to the specified level. Otherwise, the low tire pressure warning light may not come on even if the tire inflation pressure is low, or it may come on when the tire inflation pressure is actually normal.

■ Registering ID Codes

Every tire pressure warning valve and transmitter has a unique ID code. In addition to the set of tire pressure monitoring system sensor ID codes initially registered to the vehicle, a second set of ID codes can be registered.

A second set of tire pressure monitoring system sensor ID codes can be registered at your SUBARU dealer. When 2 sets of ID codes have been registered, either ID code set can be selected.

■ Changing the ID code set

1. Park the vehicle in a safe place and turn the ignition switch to the “ON” position.
2. Press the TPMS set switch 3 times within 3 seconds.
3. The low tire pressure warning light will illuminate for 3 seconds and then blink 3 times.
4. The low tire pressure warning light will blink for 1 minute and then illuminate.
5. When the ID code change has completed, the tire pressure monitoring light will turn off.

Check that tire pressures are displayed on the TPMS screen.

7-16. Parking Your Vehicle

⚠ WARNING

- **Never leave unattended children or pets in the vehicle. They could accidentally injure themselves or others through inadvertent operation of the vehicle. Also, on hot or sunny days, the temperature in a closed vehicle could quickly become high enough to cause severe or possibly fatal injuries to people.**
- **Do not park the vehicle over flammable materials such as dry grass, waste paper or rags, as they may burn easily if they come near hot engine or exhaust system parts.**
- **Be sure to stop the engine if you take a nap in the vehicle. If engine exhaust gas enters the passenger compartment, occupants in the vehicle could die from carbon monoxide (CO) contained in the exhaust gas.**

■ Parking Brake

To set the parking brake, depress the brake pedal firmly and hold it down until the parking brake lever is fully pulled up.

– CONTINUED –

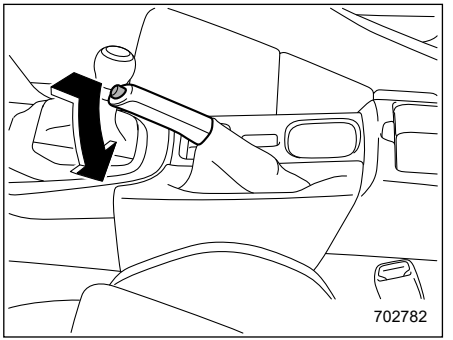

To release the parking brake, pull the lever up slightly, press the release button, then lower the lever while keeping the button pressed.

When the parking brake is set while the engine is running, the parking brake warning light illuminates. After starting the vehicle, be sure that the warning light has turned off before the vehicle is driven. Refer to "Brake System Warning Light" ☞P144.

⚠ CAUTION

- **Never drive while the parking brake is set because this will cause unnecessary wear on the brake linings. Before starting to drive, always make sure that the parking brake has been fully released.**
- **The braking power of the parking brake may not be sufficient when stronger braking power is needed.**

■ Parking Tips

When parking your vehicle, always perform the following items.

- Apply the parking brake firmly.
- For MT models, put the shift lever in the "1" (1st) for upgrade or "R" (Reverse) for a downgrade.
- For AT models, put the select lever in the "P" (Park) position.

Never rely on the mechanical friction of the transmission alone to hold the vehicle.

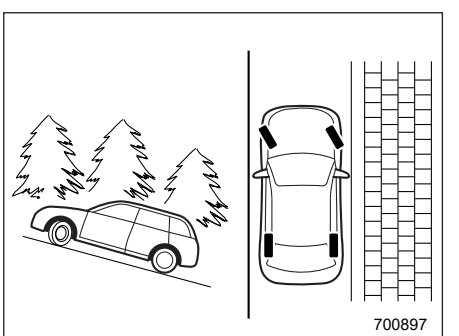

When parking on a hill, always turn the steering wheel. When the vehicle is headed up the hill, the front wheels should be turned away from the curb.

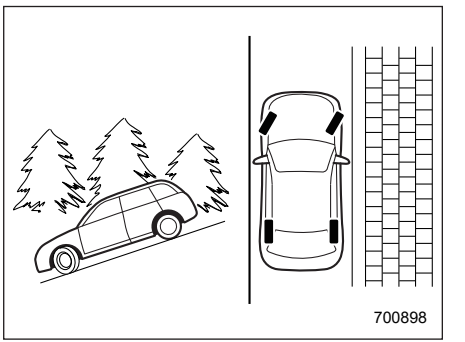

When facing downhill, the front wheels should be turned into the curb.

⚠ CAUTION

If your vehicle has a front underspoiler and rear underspoiler (both optional), pay attention to blocks and other obstructions on the ground when parking. The underspoilers could be damaged by contact with them.

7-17. Hill Start Assist System

⚠ WARNING

- **The Hill start assist system is a device only for helping the driver to START the vehicle on an uphill grade. To prevent accidents when the vehicle is parked on a slope, be sure to firmly set the parking brake. When setting the parking brake, make sure that the vehicle remains stationary when the clutch pedal (MT models) and brake pedal (both MT and AT models) are released.**
- **Do not turn the ignition switch to the "OFF" position while the Hill start assist system is operating. The Hill start assist system will be deactivated and may lead to an accident.**

The Hill start assist system is a device to make the following vehicle operations easier.

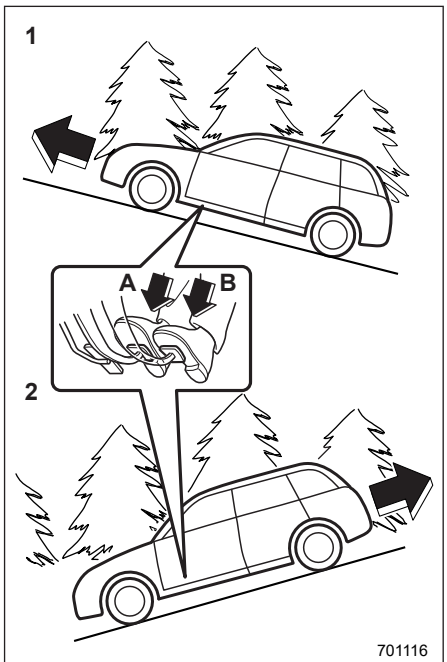

1) Starting forward facing uphill
2) Starting backward facing downhill

A) Brake pedal (both MT models and AT models)
B) Clutch pedal (MT models only)

In both these cases, the Hill start assist system operates under the following conditions.

- The clutch pedal is depressed while the brake pedal is also depressed (MT models).
- The vehicle has stopped with the brake pedal depressed (AT models).

Braking power is maintained temporarily (for approximately 2 seconds) by the Hill start assist system after the brake pedal is released. The driver is therefore able to start the vehicle in the same way as on a level grade, just using the clutch pedal (MT models only) and accelerator pedal (all models).

If the braking power of the Hill start assist system is insufficient after the brake pedal is released, apply more braking power by depressing the brake pedal again.

The Hill start assist system may not operate on slight grades. Also, the Hill start assist system does not operate in the following cases.

– CONTINUED –

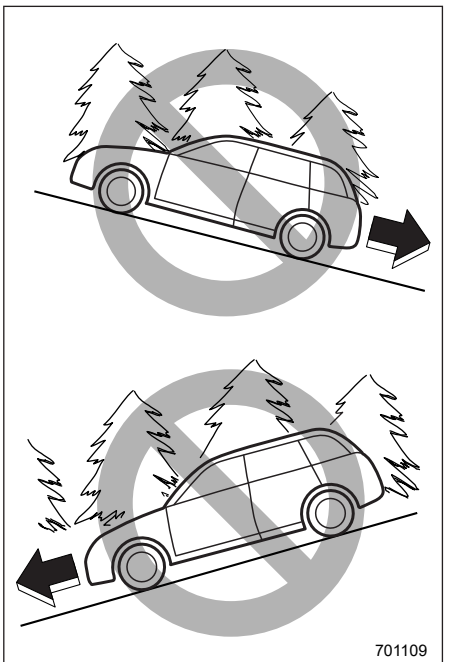

- When starting backward facing uphill
- When starting forward facing downhill
- While the parking brake is applied
- While the ignition switch is in the “ACC” or “OFF” position
- While the Hill start assist indicator light is illuminated. Refer to "Hill Start Assist Indicator Light" ☞P154.

When using the Hill start assist system, a braking effect may be felt even after the brake pedal has been released. However, for MT models, this braking effect should disappear once the clutch pedal is released.

⚠ CAUTION

The braking power of the Hill start assist system may not be sufficient when strong braking power is needed.

NOTE

A slight jolt may be felt when the vehicle begins to move forward after being reversed.

■ To Activate/Deactivate the Hill Start Assist System

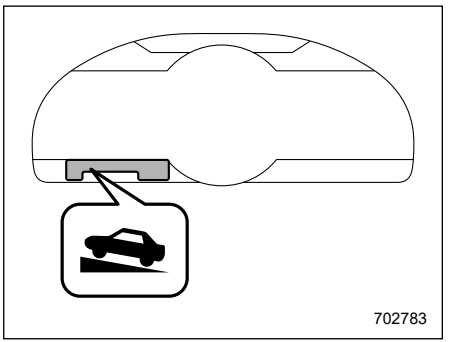

Hill start assist indicator light

⚠ CAUTION

When starting on an uphill grade, make sure the Hill start assist indicator light is on.

If the Hill start assist indicator light is off, make sure the parking brake is applied.

To activate or deactivate the Hill start assist system, perform the following steps.

NOTE

If you make an error when performing any steps in the following procedure, place the ignition switch in the "OFF" position once and then start over again.

▼ To deactivate

1. Park your vehicle in a flat and safe location and apply the parking brake.
2. Turn the ignition switch to the "OFF" position.
3. Restart the engine.

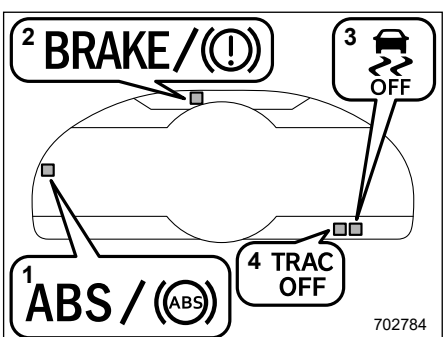

4. Confirm the following items.
   (1) The ABS warning light turns off.
   (2) The brake system warning light illuminates.
   (3) The Vehicle Stability Control (VSC) OFF indicator light turns off.
   (4) TRAC OFF indicator light turns off.

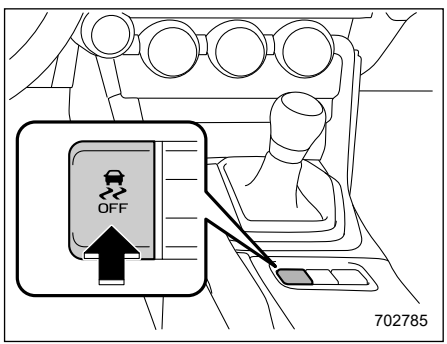

5. Press and hold the Vehicle Stability Control (VSC) OFF switch for 30 seconds until the TRAC OFF indicator on the combination meter turns on and off.
6. Within 5 seconds, release the Vehicle Stability Control (VSC) OFF switch.
7. Within 2 seconds, press back the Vehicle Stability Control (VSC) OFF switch.
   The Hill start assist indicator light turns on and off.
8. Turn the ignition switch to the "OFF" position. Hill start assist is deactivated.

NOTE

- **When the Hill start assist system is deactivated, the Hill start assist indicator light turns off.**
- **If the Vehicle Stability Control (VSC) OFF switch is held down for 30 seconds or longer, any further operation of the Vehicle Stability Control (VSC) OFF switch and TRACK switch will be disabled. For details, refer to "Vehicle Stability Control (VSC) OFF Switch" ☞P255.**

▼ To reactivate

To reactivate Hill start assist system, repeat steps 1 to 8. When the Hill start assist system is activated, the Hill start assist indicator light illuminates.

■ Hill Start Assist Indicator Light

Refer to "Hill Start Assist Indicator Light" ☞P154.

7-18. Rear View Camera

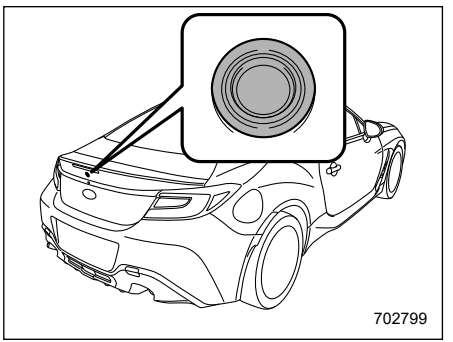

A rear view camera is attached to the trunk lid. When the ignition switch is in the “ON” position and the shift lever (MT models) or select lever (AT models) is set to “R”, the rear view camera automatically displays the rear view image behind the vehicle on the center information display.

⚠ WARNING

- **Since the rear view camera uses a wide-angle lens, the image on the monitor is different from the actual view in terms of distance.**
- **Since the range of the image on the monitor is limited, always check the rear view and the surrounding area with your eyes and mirrors, and move backward at a slow speed. Moving backward only by checking the rear view image from the camera could cause an accident.**
- **Do not disassemble or modify the camera, switch or wiring. If smoke comes out or you smell a strange odor, stop using the rear view camera immediately. Contact your SUBARU dealer for an inspection. Continued use may result in accident, fire or electric shock.**

⚠ CAUTION

- **When washing your vehicle with a high-pressure washer, do not allow water to touch the camera directly. Entry of water in the camera lens may result in condensation, malfunction, fire or electric shock.**
- **Since the camera is a precision device, do not subject it to strong impacts. Otherwise, malfunction, fire or electric shock may occur.**
- **If mud or snow sticks to or is frozen on the camera, you must be very careful when removing it. Otherwise, damage to the camera may cause a fire or electric shock. Pour water or lukewarm water over the camera to remove mud and ice, and wipe it with a soft, dry cloth.**
- **Do not put a flame close to the camera or wiring. Otherwise, damage or fire may occur.**
- **When replacing the fuse, be sure to use a fuse with the specified rating. Use of a fuse with a different rating may result in a malfunction.**
- **If you use the rear view camera for a long time while the engine is not operated, the battery may become completely discharged.**

NOTE

• Do not wipe the camera with alcohol, benzine or paint thinner. Otherwise, discoloration may occur. To remove contamination, wipe the camera with a cloth moistened with a diluted neutral detergent. Then wipe it with a soft, dry cloth.

• When waxing the vehicle, be careful not to apply the wax to the camera. If it comes in contact with the camera, moisten a clean cloth with a diluted neutral detergent to remove the wax.
• The camera lens has a hard coating to help prevent scratches. However, when washing the vehicle or cleaning the camera lens, be careful not to scratch the camera lens. Do not use a washing brush directly on the camera lens. The image quality of the rear view camera may deteriorate.
• Strong light shined on the camera lens may develop vertical lines around the light source. This is not a malfunction.
• Under the fluorescent light, the display may flicker. However, this is not a malfunction.
• The image of the rear view camera may be slightly different from the actual color of the objects.
• If there is a malfunction on the center information display, refer to "Malfunctions of the Center Information Display" ☞P331.

■ How to Use the Rear View Camera

When the shift lever/select lever is set to "R", the rear view camera automatically displays the rear view image from the vehicle. When the lever is set to other positions, the image before setting to "R" is displayed.

1. Set the ignition switch to "ON".
2. Set the shift lever/select lever to "R".

NOTE

• The image of the rear view camera is horizontally reversed as is the case with the vehicle inside mirror or the outside mirror.
• When "Rear Camera Delay Control" is on, the rear view image from the rear view camera will be displayed on the center information display for a certain amount of time after the shift lever (MT models) or select lever (AT models) is shifted from "R" to another position.
When any of the following conditions are met, the rear view image will be canceled:
- The select lever is shifted to "P" (AT models)
- The vehicle speed becomes approximately 5 mph (8 km/h) or more
- The parking brake is engaged
- 9 seconds have elapsed since the shift lever (MT models) or select lever (AT models) was shifted from "R" to another position
To turn the function on and off, refer to "General settings" ☞P165.
• It may be difficult to see the image of the rear view camera in the following cases. This is not a malfunction of the camera.
- The vehicle is in a dark place (at night, in a tunnel, etc.).
- The vehicle is in an extremely hot or cold place.
- An object (such as raindrops, snow, dirt, etc.) that disturbs the view of the rear view camera sticks to the lens of the camera.
- Strong light is shining directly on the camera lens (occasionally, there are vertical lines on the screen).

■ Viewing Range on the Screen

⚠ CAUTION

The range that can be viewed with the rear view camera is limited. Always be sure to check with your eyes when moving backward and proceed slowly. Otherwise, it may cause an accident or injury.

– CONTINUED –

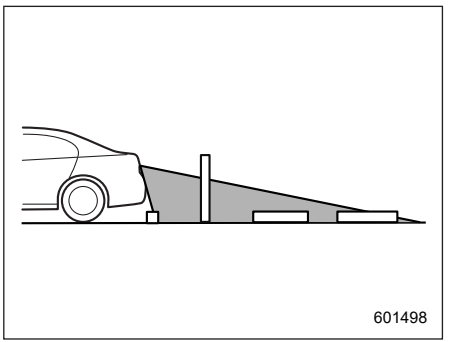

Range of view

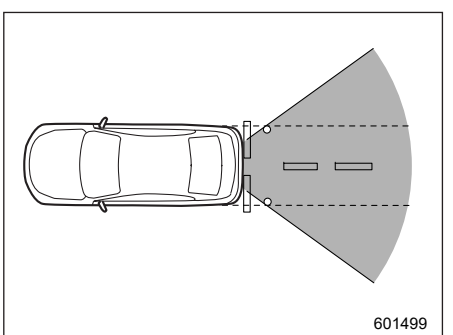

Range of view

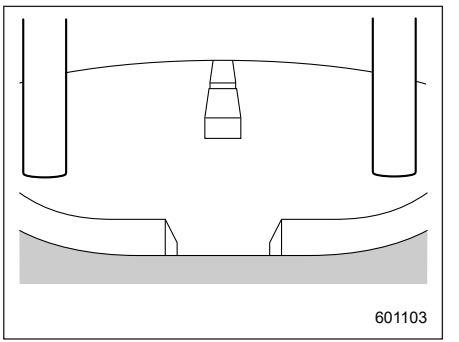

Image from camera

The area from the rear end of the bumper can be viewed. Areas at both ends of the bumper and areas just under the bumper cannot be viewed.

Also, the image from the rear view camera looks shorter than the actual distance.

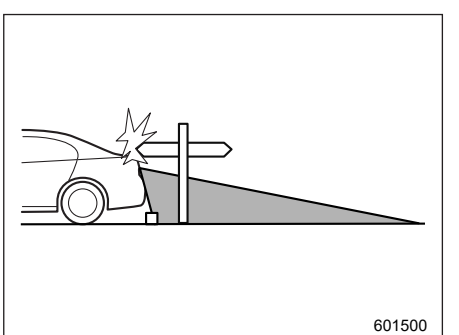

Range of view

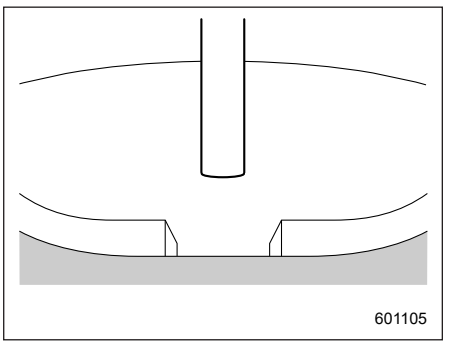

Image from camera

The area above the camera cannot be viewed. If there is an object that has a wide projection on its upper part such as a sign pole behind the vehicle, the projection cannot be seen on the screen.

■ Help Lines

The help lines are a guide to help you realize the actual distance from the screen image.

NOTE

If you shift to the "R" range within several seconds after turning on the ignition switch, the warning message may not be displayed. Wait for several seconds after turning on the ignition

switch before shifting to the "R" range. Then, the warning message will be displayed.

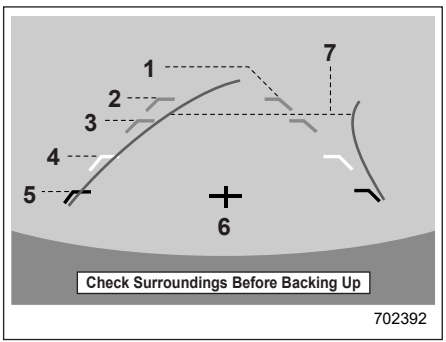

Help lines
1) Vehicle width line (oblique vertical line)
2) Approx. 10 ft (3 m) from the bumper (green horizontal line)
3) Approx. 6 ft (2 m) from the bumper (green horizontal line)
4) Approx. 3 ft (1 m) from the bumper (yellow horizontal line)
5) Approx. 1.5 ft (0.5 m) from the bumper (red horizontal line)
6) Vehicle centerline
7) Dynamic guidelines

When the shift lever/select lever is set to "R", the monitor screen displays the help lines together with the rear view image.

CAUTION

- **When moving backward, always check the back with your eyes without relying on the help lines. Otherwise, it may cause an accident or injury.**
- **The actual position may be different from the indication of the help lines.**
- **Differences may occur due to the number of passengers or the loaded cargo.**
- **When the vehicle is on a slope or inclined against the road, the indication is different from the actual position.**

NOTE

When "Steering Angle Lines" is off, the dynamic guidelines will be disappear on the center information display. To turn the dynamic guidelines on and off, refer to "General settings" ☞P165.

▼ Difference between screen image and actual road

The distance markers show the distance for a level road when the vehicle is not loaded. It may be different from the actual distance depending on the loading conditions or road conditions.

▽ When there is an upward slope at the back

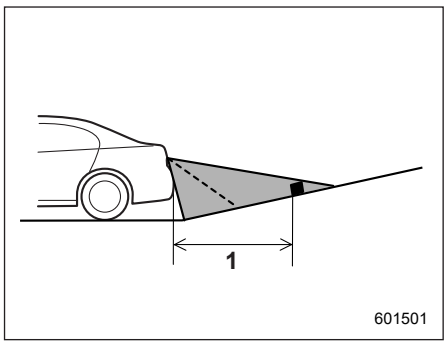

1) 3 ft (1 m)

The distance on the screen looks farther than the actual distance.

– CONTINUED –

▽ **When there is a downward slope at the back**

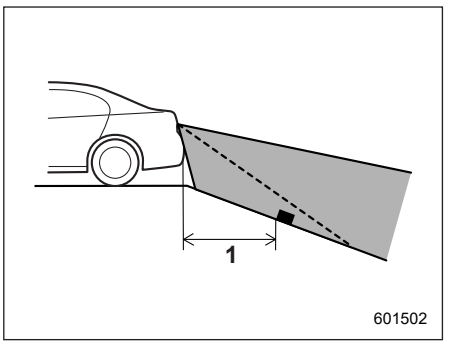

1) 3 ft (1 m)

The distance on the screen looks nearer than the actual distance.

NOTE

When cargo is loaded, the rear view distance on the screen looks farther than the actual distance as in an upward slope.

▼ **Feature of distance marker**

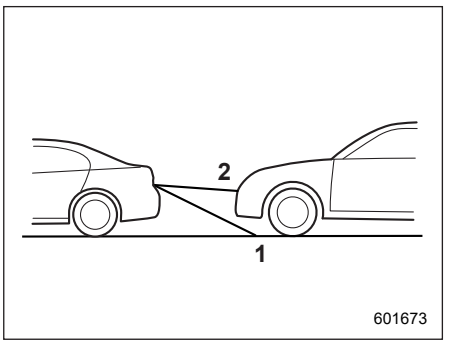

1) 3 ft (1 m) line
2) 10 ft (3 m) line

The distance marker shows the distance on the road. If there is a car or another object close behind, distance cannot be correctly displayed.

7-19. BSD/RCTA (If Equipped)

The BSD/RCTA consists of rear corner radars with Blind Spot Detection and Rear Cross Traffic Alert.

These functions of BSD/RCTA are the systems that detect objects and vehicles to the rear and draw attention to the driver when changing a lane or when driving in reverse.

⚠ WARNING

The driver is responsible for driving safely. Always be sure to check the surroundings with your eyes when changing lanes or reversing the vehicle.

The system is designed to assist the driver in changing lanes or reversing safely by monitoring the rear and side areas of the vehicle. However, you cannot rely on this system alone in assuring the safety during a lane change or reversing. Overconfidence in this system could result in an accident and lead to serious injury or death. Since the system operation has various limitations, the flashing or illumination of the BSD/RCTA approach indicator light may be delayed or the warning buzzer may be delayed or inoperative, even if there is a vehicle traveling in a neighboring lane or approaching your vehicle from either side.

The driver is responsible for paying attention to the rear and side areas of the vehicle.

⚠ CAUTION

In the following cases, turn off the BSD/RCTA system. The system may not operate properly due to blocked radar waves.

- **When towing a load**
- **When a bicycle carrier or other item is fitted to the rear of the vehicle**
- **When using a chassis dynamometer or free roller device, etc.**
- **When running the engine and making the wheels rotate while lifting up the vehicle**

■ System Features

BSD/RCTA consists of the following functions.

- To detect a vehicle in a blind spot on an adjacent lane or a vehicle approaching at high speed while driving the vehicle (Blind Spot Detection)
- To detect a vehicle approaching from the right or left while reversing the vehicle (Rear Cross Traffic Alert)

The system uses radar sensors for the following features.

NOTE

The BSD/RCTA radar sensor is approved under the radio wave related laws of each country. For details, refer to "Certification for the BSD/RCTA" ☞P278.

– CONTINUED –

▼ Blind Spot Detection (BSD)

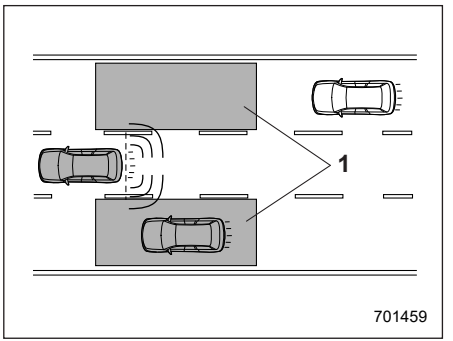

1) Operating range

The system notifies the driver of the presence of vehicles in its blind spot.

- If the system detects a vehicle in its blind spot, it warns the driver by illuminating the BSD/RCTA approach indicator light(s) on the outside mirror(s).
- If the driver operates the turn signal lever in the direction where the BSD/RCTA approach indicator light is illuminating, the system warns the driver of dangers by flashing the BSD/RCTA approach indicator light.

▽ Lane Change Assist (LCA)

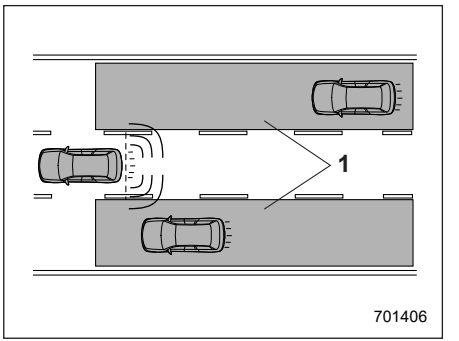

1) Operating range

The system notifies the driver of vehicles approaching at a high speed in the neighboring lanes.

- If the system detects a vehicle approaching at a high speed in the neighboring lanes, it warns the driver of dangers by illuminating the BSD/RCTA approach indicator light(s) on the outside mirror(s).
- If the driver operates the turn signal lever in the direction where the BSD/RCTA approach indicator light is illuminating, the system warns the driver of dangers by flashing the BSD/RCTA approach indicator light.

▼ Rear Cross Traffic Alert (RCTA)

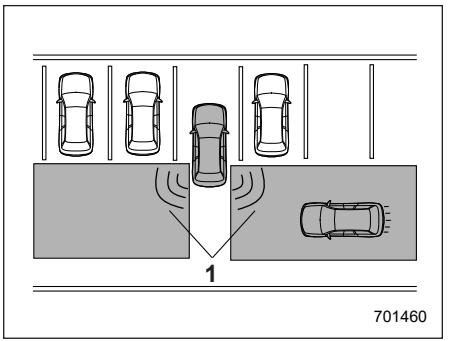

1) Operating range

The system notifies the driver of another vehicle approaching from either side when driving in reverse. This feature helps the driver check the rear and side areas of the vehicle when moving backward.

If the system detects a vehicle approaching from either side while moving backward, it warns the driver of dangers in the following way.

- The BSD/RCTA approach indicator light(s) on the outside mirror(s) flashes.
- A warning buzzer sounds.
- An icon appears on the center information display.

▽ Limitations of the detectability of RCTA

Since the detectability of RCTA is limited, the RCTA may not operate properly in angled parking.

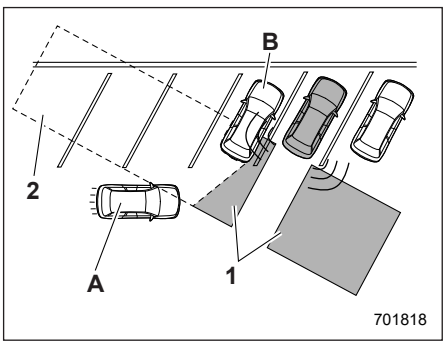

Example 1

1) The detection range of the radar sensors
2) Area out of detection range of the radar sensors

A) Vehicle that may not be detected
B) Parked vehicle

⚠ WARNING

An approaching vehicle (A) may not be detected because the detection range is limited by the parked vehicle (B). Always be sure to check the surroundings with your eyes when reversing the vehicle.

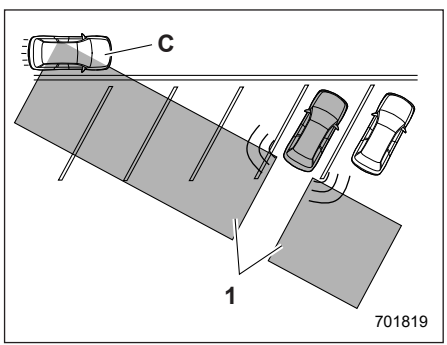

Example 2

1) The detection range of the radar sensors

C) Vehicle that may be detected

NOTE

The system may detect that a vehicle (C) is passing in front of your vehicle. Always be sure to check the surroundings with your eyes when reversing the vehicle.

■ System Operation

▼ Operating conditions

The BSD/RCTA will operate when all of the following conditions are met.

- The ignition switch is in the “ON” position.
- The BSD/RCTA warning indicator and BSD/RCTA OFF indicator are turned off.
- The vehicle is driven at speeds above 7 mph (12 km/h) (except when reversing).
- The shift lever/select lever is in the “R” position (RCTA only).

The BSD/RCTA will not operate in the following situations.

- The BSD/RCTA OFF indicator appears.
- The vehicle speed is below 6 mph (10 km/h) even when the BSD/RCTA OFF indicator does not appear (except when reversing).

NOTE

• In the following cases, the BSD/RCTA will stop operating and the BSD/RCTA warning indicator will appear.

- When a malfunction occurs in the system, including the BSD/RCTA approach indicator light

– CONTINUED –

• If the BSD/RCTA warning indicator appears, exercise proper caution. For details, refer to "BSD/RCTA Warning Indicator" ☞P277.
• In the following cases, the BSD/RCTA will temporarily stop operating (or may stop operating) and the BSD/RCTA OFF indicator will appear.
- When the radar sensor becomes significantly misaligned (If the orientation of the radar sensor is shifted for any reason, readjustment is required. Have the sensor adjusted at a SUBARU dealer.)
- When a large amount of snow or ice sticks to the rear bumper surface around the radar sensors
- When the vehicle is driven on a snow-covered road or in an environment in which there are no objects around (such as in a desert) for a prolonged period of time
- When the temperature around the radar sensors increases excessively due to long driving on uphill grades in the summer, etc.
- When the temperature around the radar sensors becomes extremely low
- When the vehicle battery voltage lowers
- When the vehicle voltage exceeds the battery voltage rating

The BSD/RCTA will resume operation once these conditions are corrected, and the BSD/RCTA OFF indicator will disappear. However, if the BSD/RCTA OFF indicator appears for a prolonged period of time, have the system inspected at a SUBARU dealer as soon as possible.
• The detectability of the radar sensors is restricted. The BSD/RCTA detection may be impaired and the system may not operate properly under the following conditions.
- When the rear bumper around the radar sensors is distorted
- When ice, snow or mud adheres to the rear bumper surface around the radar sensors
- When stickers, etc. are affixed on the areas of the radar sensors on the rear bumper
- During adverse weather conditions such as rain, snow or fog
- When driving on wet roads such as snow-covered roads and through puddles
• The radar sensors may not detect or may have difficulty detecting the following vehicles and objects.
- Small motorcycles, bicycles, pedestrians, stationary objects on the road or road side, etc.
- Vehicles with body shapes that the radar may not reflect (vehicles with lower body height such as a trailer with no cargo and sports cars)
- Vehicles that are not approaching your vehicle even though they are in the detection area (either on a neighboring lane to the rear or beside your vehicle when reversing) (The system determines the presence of approaching vehicles based on data detected by the radar sensors.)
- Vehicles traveling at significantly different speeds
- Vehicles driving in parallel at almost the same speed as your vehicle for a prolonged time
- Oncoming vehicles
- Vehicles in a lane beyond the neighboring lane
- Vehicles travelling at a significantly lower speed that you are trying to overtake
• On a road with extremely narrow lanes, the system may detect vehicles driving in a lane next to the neighboring lane.

■ BSD/RCTA Approach Indicator Light/Warning Buzzer

While the BSD/RCTA is active, the following item(s) will operate to alert the driver:

• The BSD/RCTA approach indicator light (when there are vehicles in the neighboring lanes).

• The BSD/RCTA approach indicator light and warning buzzer (when a vehicle is approaching from the left or right side while your vehicle is reversing)

▼ BSD/RCTA approach indicator light

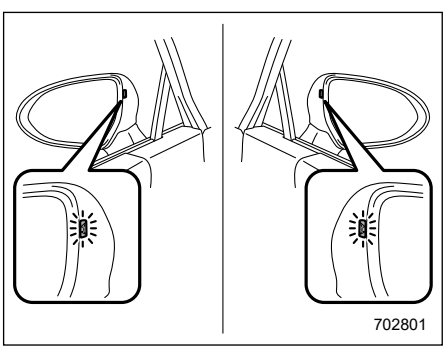

BSD/RCTA approach indicator light

It is mounted on each side of the outside mirrors.

The indicator light will illuminate when a vehicle approaching from behind is detected.

The indicator light will flash to warn the driver of dangers under the following conditions.

• While the indicator light is illuminating, if the turn signal lever is operated toward the side in which this light turned on

• When reversing the vehicle while the system detects a vehicle approaching from either side

▽ BSD/RCTA approach indicator light dimming function

When the headlights are turned on, the brightness of the BSD/RCTA approach indicator light will be reduced.

NOTE

• You may have difficulty seeing the BSD/RCTA approach indicator light under the following conditions.

- When sunlight shines directly on it

- When the headlight beams from a vehicle traveling behind shines directly on it

• While the illumination brightness control dial is in the fully upward position, even if the headlights are turned on, the brightness of the BSD/RCTA approach indicator light will not be reduced. For details about the illumination brightness control dial, refer to "Illumination Brightness Control" ☞P134.

▼ BSD/RCTA approach warning buzzer (only when reversing)

A warning buzzer sounds along with flashing of the BSD/RCTA approach indicator light to warn the driver of dangers.

The setting of the warning buzzer volume can be changed by operating the center information display. For details, refer to "Car settings" ☞P169.

▼ Safety tips regarding the BSD/RCTA approach indicator light/warning buzzer

• In the following cases, operation of the BSD/RCTA approach indicator light and the warning buzzer may be delayed or the system may fail to issue these warnings.

- When a vehicle moves to the neighboring lane from a lane next to the neighboring lane
- When driving on a steep incline or on repeated sharp uphill and downhill grades
- When going beyond a pass

– CONTINUED –

- When both your vehicle and a vehicle driving on a neighboring lane are driving on the far side of each lane.
- When several narrowly-spaced vehicles are approaching in a row
- In low radius bends (tight bends or when making turns at an intersection)
- When there is a difference in height between your lane and the neighboring lane
- Immediately after the BSD/RCTA is activated by touching “BSD/RCTA”
- Immediately after the shift lever/ select lever is shifted to the “R” position
- When extremely heavy cargo is loaded in the trunk

• During reversing, operation of the BSD/RCTA approach indicator light and the warning buzzer may be delayed or the system may fail to issue these warnings under the following conditions.

- When backing out of an angled parking space
- When a large-sized vehicle is parked next to your vehicle (That vehicle prevents the propagation of radar waves.)
- When reversing on sloped roads
- When reversing at a high speed

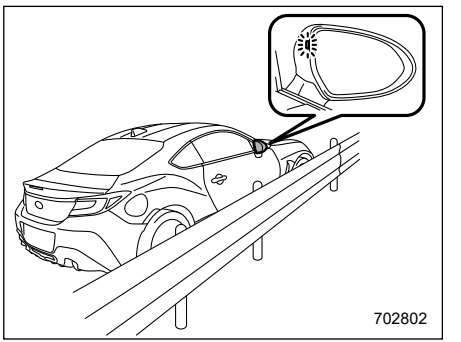

• The BSD/RCTA approach indicator light may illuminate when driving close to solid objects on the road or road side (such as guardrails, tunnels and sidewalls).

• When turning at an intersection in urban areas, or a multilane intersection, the BSD/RCTA approach indicator light may flash.

• If a building or a wall exists in the reversing direction, the BSD/RCTA approach indicator light may flash and the warning buzzer may sound.

• In the following cases, the system may detect a vehicle driving two lanes away from your vehicle.

- When your vehicle drives on the near side of its lane from the corresponding vehicle
- When the vehicle driving two lanes away drives on the near side of its lane from your vehicle

■ BSD/RCTA OFF Indicator

▼ System temporary stops

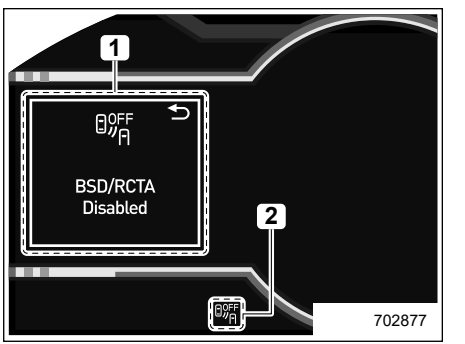

1) BSD/RCTA temporary stop message
2) BSD/RCTA OFF indicator

This display appears when the system is used at extremely high or low temperatures or when abnormal voltage exists. Once these conditions are corrected, the system will recover from the temporary stop condition and the indicator will disappear.

If the indicator remains displayed for a prolonged time, have the system inspected at a SUBARU dealer.

▼ **System temporary stops due to reduced radar sensitivity**

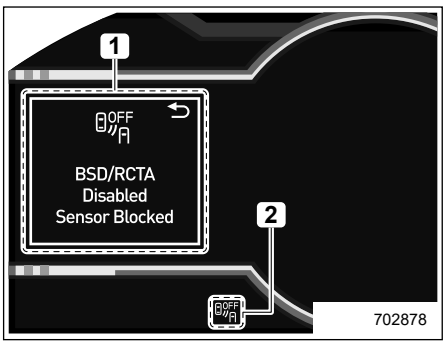

1) BSD/RCTA temporary stop message due to reduced radar sensitivity
2) BSD/RCTA OFF indicator

This display appears when the detectability of the radar sensors is reduced. Once the condition is corrected, the system will recover from the temporary stop condition and the indicator will disappear.

If the indicator remains displayed for a prolonged time, have the system inspected at a SUBARU dealer.

■ BSD/RCTA Warning Indicator

▼ **System malfunction**

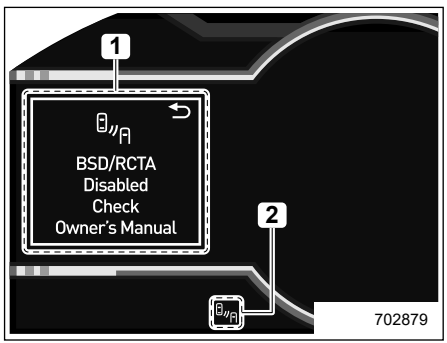

1) BSD/RCTA malfunction message
2) BSD/RCTA warning indicator

This display appears when a malfunction occurs in the system. Contact a SUBARU dealer and have the system inspected.

■ To Turn On/Off the BSD/RCTA

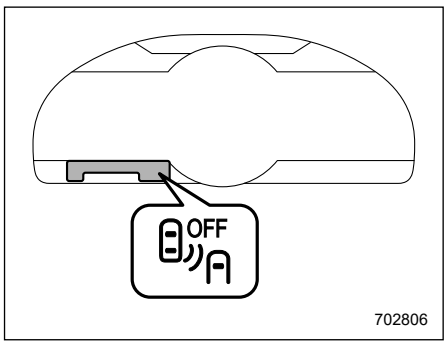

BSD/RCTA OFF indicator

To turn the BSD/RCTA system on and off, operate the center information display. Refer to "Car settings" ☞P169.

When the BSD/RCTA system is turned OFF, the BSD/RCTA OFF indicator on the combination meter display (color TFT) will illuminate.

NOTE

If the ignition switch is turned to the "OFF" position, the last known status of the system is maintained. For example, if the ignition switch is turned to the "OFF" position with the BSD/RCTA deactivated, the BSD/RCTA remains deactivated the next time the

– CONTINUED –

ignition switch is turned to the "ON" position.

■ Certification for the BSD/ RCTA

- **The U.S. and other FCC compliant countries**

FCC ID: OAYSRR3A

⚠ CAUTION

FCC WARNING

Changes or modifications not expressly approved by the party responsible for compliance could void the user's authority to operate the equipment.

This device complies with part 15 of the FCC Rules. Operation is subject to the following two conditions: (1) This device may not cause harmful interference, and (2) this device must accept any interference received, including interference that may cause undesired operation.

- **Canada-spec. models**

NOTE

This device contains licence-exempt transmitter(s)/receiver(s) that comply with Innovation, Science and Economic Development Canada's licence-exempt RSS(s). Operation is subject to the following two conditions:

1.This device may not cause interference.
2.This device must accept any interference,including interference that may cause undesired operation of the device.

Radiofrequency radiation exposure information:
This equipment complies with radiation exposure limits set forthfor an uncontrolled environment.
This equipment should be installed and operated with minimum distance of 20 cm between the radiator and your body.

702883

REMARQUE

L'émetteur/récepteur exempt de licence contenu dans le présent appareil est conforme aux CNR d'Innovation, Sciences et Développement économique Canada applicables aux appareils radio exempts de licence. L'exploitation est autorisée aux deux conditions suivantes:

1. L'appareil ne doit pas produire de brouillage;
2. L'appareil doit accepter tout brouillage radioélectrique subi, même si le brouillage est susceptible d'en compromettre le fonctionnement.

Informations sur l'exposition aux rayonnements radiofréquences:
Cet équipement est conforme aux limites d'exposition aux rayonnements définies pour un environnement non contrôlé. Cet équipement doit être installé et utilisé avec un minimum de 20 cm de distance entre la source de rayonnement et votre corps.

702884

- **Mexico-spec. models**

Certificado de homologacion:
RLVCOSR15-0442

Continental SRR3-A

Este equipo opera a titulo secundario, consecuentemente, debe aceptar interferencias perjudiciales incluyendo equipos de la misma clase y puede no causar interferencias a sistemas operando a titulo primario.

702185

■ Handling of Radar Sensors

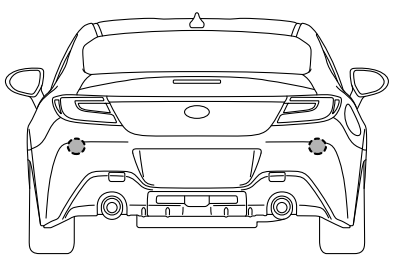

702807

Radar sensors

The radar sensors, one on each side of the vehicle, are mounted inside the rear bumper.

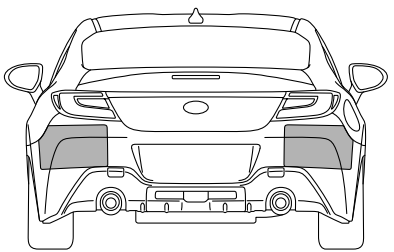

702808

⚠ CAUTION

To ensure correct operation of the BSD/RCTA, observe the following precautions.

- **Always keep the bumper surface near the radar sensors clean.**
- **Do not affix any stickers or other items on the bumper surface near the radar sensors. For details, consult your SUBARU dealer.**
- **Do not modify the bumper near the radar sensors.**
- **Do not paint the bumper near the radar sensors.**
- **Do not expose the bumper near the radar sensors to strong impacts. If a sensor becomes misaligned, a system malfunction may occur, including the inability to detect vehicles entering the detection areas. If any strong shock is applied to the bumper, be sure to contact your SUBARU dealer for inspection.**
- **Do not disassemble the radar sensors.**

NOTE

If the radar sensors require repair or replacement, or the bumper area around the radar sensors requires repair, paintwork or replacement, contact your SUBARU dealer for assistance.

7-20. Reverse Automatic Braking (RAB) System (If Equipped)

Reverse Automatic Braking (RAB) is a system designed to help avoid collisions or reduce collision damage when reversing the vehicle. If a wall or an obstacle is detected in the reversing direction, the system will notify the driver with a warning sound and may activate the vehicle's brakes automatically.

⚠ WARNING

- **Reverse Automatic Braking (RAB) is not a system intended to replace the driver's responsibility to check their surroundings for vehicles or obstacles to avoid a collision.**
- **The driver is responsible for driving safely. Before reversing, be sure to first depress the brake pedal and visually check the surroundings.**
- **There are some cases in which the vehicle cannot avoid collision, because the system operation has limitations. The warning sound or automatic braking may be delayed or may not operate at all even when an obstacle is present.**
- **Make sure to set the Reverse Automatic Braking (RAB) system to OFF when the vehicle is on the free roller or on the chassis dynamometer. Otherwise, the vehicle may move and it may cause an accident.**
- **Make sure to set the Reverse Automatic Braking (RAB) system to OFF when towing the vehicle. Otherwise, the vehicle may move and it may cause an accident.**
- **The system is not designed to detect people (including children), animals or other moving objects.**
- **Depending on the vehicle condition or the surrounding environment, the sonar sensor's ability to detect objects may become unstable.**
- **When an attachment part (trailer hitch, bicycle carrier, bumper guard) is installed on the rear of the vehicle, turn off the Reverse Automatic Braking (RAB). If this function is on when an attachment or a similar part is installed, it may result in a system malfunction that causes an accident resulting in serious damage, injury or death.**

NOTE

The Reverse Automatic Braking (RAB) system records and stores the following data when automatic braking operates. It does not record conversations, personal information or other audio data.

- **Distance from the object**
- **Vehicle speed**
- **Accelerator pedal operation status**
- **Brake pedal operation status**
- **Select lever position**
- **Outside temperature**
- **The sensitivity setting of the sonar sensors**

SUBARU and third parties contracted by SUBARU may acquire and use the recorded data for the purpose of vehicle research and development. SUBARU and third parties contracted

by SUBARU will not disclose or provide the acquired data to any other third party except under the following conditions.

- **The vehicle owner has given his/her consent.**
- **The disclosure/provision is based on a court order or other legally enforceable request.**
- **Data that has been modified so that the user and vehicle cannot be identified is provided to a research institution for statistical processing or similar purposes.**

■ Reverse Automatic Braking (RAB) System Overview

The Reverse Automatic Braking (RAB) system will operate the following function using 4 sonar sensors.

The Reverse Automatic Braking (RAB) system detects objects rearward and if there is a high risk of a collision, the system decelerates the vehicle and controls the braking to reduce damage.

– CONTINUED –

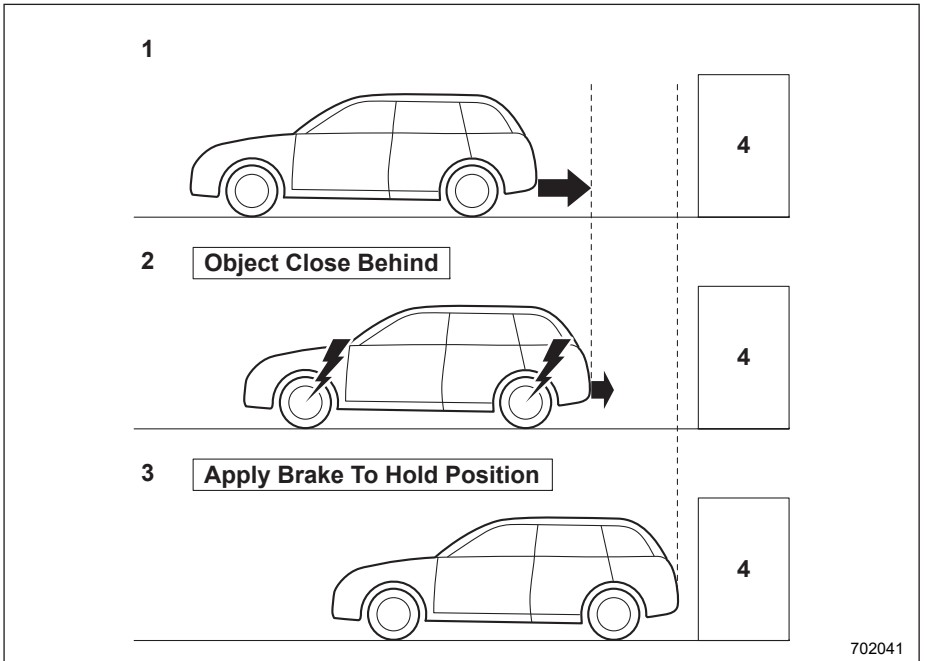

1) When reversing
2) When either strong automatic braking or torque control is applied to prevent collision (in this case, short warning beeps or continuous warning beeps will sound)
3) When the vehicle is stopped by the system (in this case, the continuous beep will remain sounding)
4) Object (e.g., a wall)

⚠ WARNING

If your vehicle is trapped on a railroad crossing and you are trying to escape by reversing through the crossing gate, the system may recognize the crossing gate as an obstacle and brake may activate. In this case, remain calm and either continue to depress the accelerator pedal or cancel the system. To cancel the system, refer to "Canceling the Reverse Automatic Braking (RAB) System Operation" ☞P287.

■ Operating Conditions

The Reverse Automatic Braking (RAB) system will operate when all of the following conditions are met.

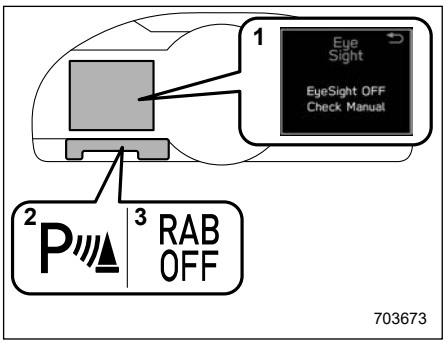

1) EyeSight warning indicator
2) RAB/Sonar Audible Alarm Warning Indicator
3) RAB OFF indicator

- The ignition switch is in the “ON” position.
- The EyeSight warning indicator is off.
- The RAB/Sonar Audible Alarm Warning Indicator is off.
- The RAB OFF indicator is off.
- The select lever is in the “R” position.
- The Reverse Automatic Braking (RAB) system is set to “ON”.
- The vehicle speed is from 1 to 9 mph (1.5 to 15 km/h).

NOTE

- **In the following cases, the Reverse Automatic Braking (RAB) system will not operate. Promptly contact a SUBARU dealer to have the system inspected.**
  - **The EyeSight warning indicator is illuminated.**
  - **The RAB/Sonar Audible Alarm Warning Indicator is illuminated.**
- **In the following cases, the Reverse Automatic Braking (RAB) system cannot be operated.**
  - **The RAB OFF indicator is illuminated.**
- **In the following cases, the functions may not be able to properly work. Promptly contact a SUBARU dealer to have the system inspected.**
  - **A sticker, paint, or a chemical is applied to the sonar sensors or the rear bumper.**
  - **The rear bumper is modified.**
  - **The rear bumper has been removed and attached.**
  - **The ground clearance is changed due to the vehicle’s loading condition or modification.**
  - **There is damage to the sonar sensors or the rear bumper.**
  - **The rear bumper is exposed to strong impact, or the rear bumper is deformed.**
- **On a steep hill, the system’s automatic braking ability will be reduced.**
- **The system is designed to avoid collisions by automatic hard braking when the vehicle’s reversing speed is less than approximately 3 mph (5 km/h). However, the system does not guarantee that the vehicle will be able to avoid collisions in any situation.**
- **If the vehicle is reversed at an extremely slow speed, the driver’s operation may be prioritized. In this case, automatic braking will not operate.**
- **In the following situations, the system may not be able to detect an object correctly:**
  - **When the vehicle is approaching diagonally to an object**
  - **When the steering wheel is turned greatly**

– CONTINUED –

• The system may not be able to detect and apply the brake with the following objects.
- Sharp or thin objects such as poles, fences and ropes which may not reflect the sound wave emitted from the sonar sensor.
- Objects that are too close to the rear bumper when the select lever is set to the "R" position.
- Objects with a surface which may not reflect the sound wave emitted from the sonar sensor such as a chain link fence or bicycle.

• Objects the system is not designed to detect and apply brake.
- Pedestrians.
- Moving objects including moving vehicles.
- Objects which absorbs sound waves such as cloth or snow.
- Objects whose surface has a diagonal angle.
- Objects that are low to the ground such as parking blocks.
- Objects that are high above the ground such as objects hanging from above.
- Objects that are out of range of the center of the vehicle in the horizontal direction.
- Objects that are not perpendicular to the ground.
- The surface of the object is uneven or wavy.

• When reversing the vehicle, the functions may not be able to work properly or may cause a system malfunction if the following conditions exist.

High frequency sound from other sources are nearby:
- Horn sound from another vehicle.
- Engine sound from other vehicles.
- Sound of an air brake.
- Vehicle detection equipment or a sonar from another vehicle.
- A sound wave with a frequency similar to the vehicle's system is transmitted near by.
- A vehicle equipped with the same system is reversing toward your reversing direction.

Weather conditions:
- Extremely high or extremely low temperatures in which the area near the sonar sensor becomes too hot or too cold to operate.
- The sonar sensors or the rear bumper near the sonar sensors are exposed to heavy rain or a significant amount of water.
- Fog, snow or sandstorm, etc.
- Air is moving rapidly such as when a strong wind is blowing.

Parts attached to the rear bumper near the sonar sensor:
- Commercial electronic parts (fog light, fender pole, radio antenna) are attached.
- Parts that emit high frequency sound, such as a horn or speaker, are attached.

Vehicle conditions:
- Ice, snow or mud is adhered to the sonar sensors or the rear bumper near the sonar sensor.
- The vehicle is significantly inclined.
- The ground clearance is significantly reduced due to the vehicle's loading condition, etc.
- When the sonar sensor is misaligned due to a collision or an accident.

Surrounding environment:
- A cloth banner, flag, hanging branch or railroad crossing bars are present in the reversing direction.
- When reversing on a gravel or grassy area.
- When reversing in an area where objects or walls are adjacent to the vehicle such as narrow tunnels, narrow bridges, narrow roads or narrow garages.

- Wheel track or hole is present in the ground of the reversing direction.
- When reversing over a drainage cover (grating cover).

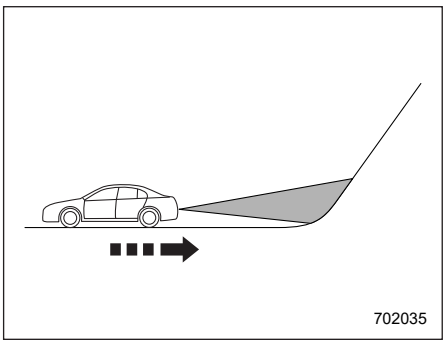

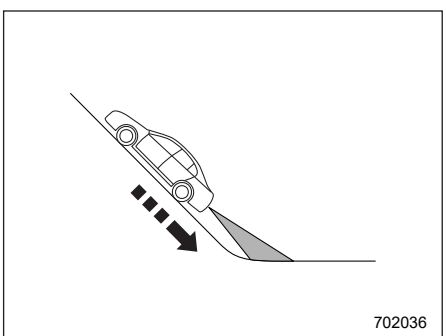

- The path of the reversing direction is inclined such as on a steep uphill.
- When reversing downhill.

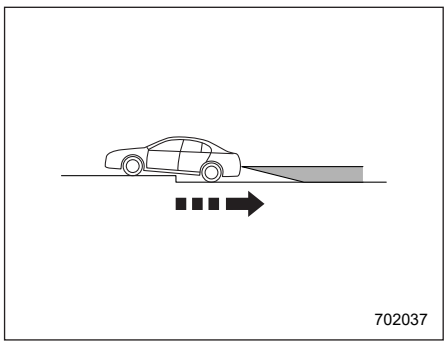

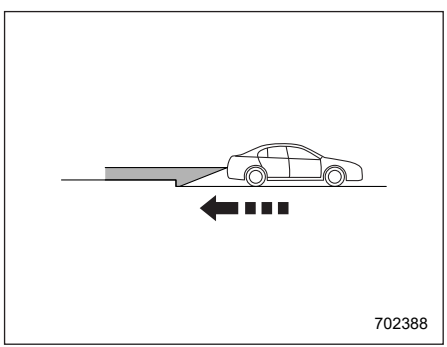

- Reversing in a garage with a low ceiling or a tunnel.
- A curb or step is present in the reversing direction.
- There is a patch of snow rearward.
- There is a puddle of water.
- There is an obstacle that is next to an object.
- Going back along a wall.
- The area where the road starts touching dirt and snow
- When reversing on an uneven road.

• In circumstances such as the following, it may not be possible to avoid a collision even when the system operates normally.

- Roads are slippery.
- The tire air pressure is not correct.
- The tires have become worn.
- Tire chains are installed.
- Tires which are not the designated size are installed.
- Emergency repairs were performed using a puncture repair kit.
- The suspension was modified.
- Vehicle driving is unstable due to accident or malfunction.
- The brake warning light is illuminated.

– CONTINUED –

■ Reverse Automatic Braking (RAB) system Operation

▼ Object close behind warning

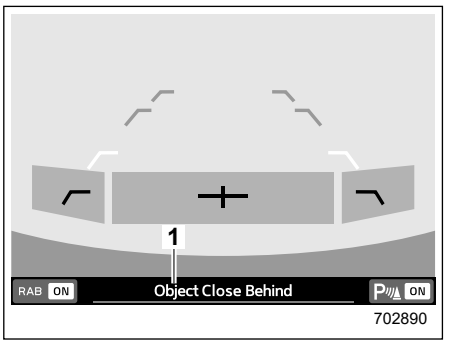

Automatic braking warning
1) Warning message

If the system determine the risk of collision with the object. Short warning beeps or continuous warning beeps will sound and either strong automatic braking or torque control will be applied to prevent collision.

At this time, a warning message is also displayed on the combination meter display (color TFT).

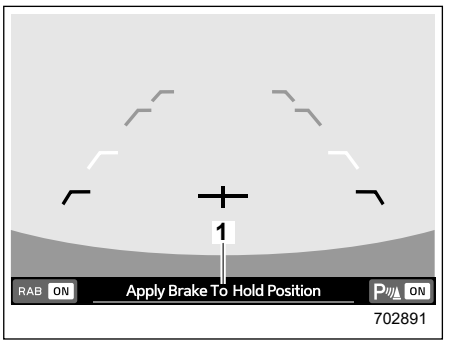

Depress brake pedal warning
1) Warning message

Make sure to depress the brake pedal once the vehicle has been stopped by automatic braking. Until the brake pedal is depressed, a message will be displayed on the center information display and the continuous beep will remain sounding.

At this time, a warning message is also displayed on the combination meter display (color TFT).

⚠ WARNING

Depress the brake pedal immediately after the system stops the vehicle by automatic braking. Depending on the conditions of the road surface and tires, the vehicle may not remain stopped, possibly leading to an accident.

▼ After the vehicle is stopped by the system

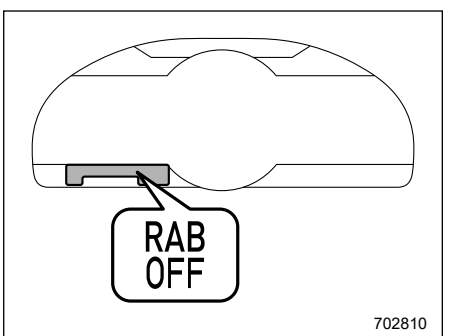

After the brake pedal is depressed, the RAB OFF indicator will illuminate and the system will temporarily stop operating. The RAB OFF indicator will turn off when the select lever is shifted to a position other than the “R” position.

The system will operate again the next time the select lever is shifted to the “R” position.

NOTE

• The Reverse Automatic Braking (RAB) system will be disabled in the following situations.

- When 3 seconds pass after the vehicle is stopped

- When any door is opened

- When the RAB/Sonar Audible Alarm Warning Indicator is illuminated

- When the RAB OFF indicator is illuminated

• The Reverse Automatic Braking (RAB) system may stop operating temporarily in the following cases and the RAB OFF indicator will illuminate.

- Ice, snow or mud is adhered to the sonar sensors or the rear bumper near the sonar sensor

- Objects are too close to the rear bumper when the select lever is set to the “R” position

- The system detects sounds of a similar frequency to the RAB sonar

- When the TRC mode and Vehicle Stability Control (VSC) mode are turned off

- When in TRACK mode and the Pre-Collision Braking System has been turned off

■ Canceling the Reverse Automatic Braking (RAB) System Operation

The Reverse Automatic Braking (RAB) system can be temporarily canceled by any of the following operation.

• While the vehicle is stopped by the operation of automatic braking, the brake pedal is depressed.

• While the vehicle is stopped by the operation of automatic braking, the accelerator pedal is depressed.

• The accelerator pedal is depressed continuously (In this case, limited acceleration will be canceled and the vehicle will continue reversing.)

• The select lever is shifted to a position other than the “R” position.

NOTE

The system will be canceled if the object is no longer detected.

■ Reverse Automatic Braking (RAB) System ON/OFF Setting

While the select lever is shifted to the “R” position, the below functions of the Reverse Automatic Braking (RAB) system can be set by operating the center information display.

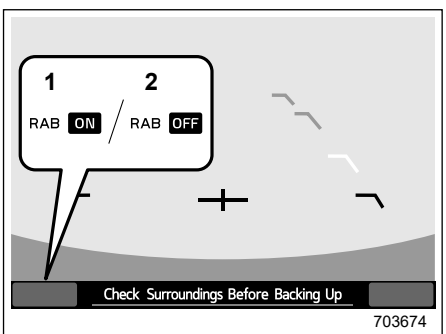

1) ON setting key of Reverse Automatic Braking (RAB) system
2) OFF setting key of Reverse Automatic Braking (RAB) system

When the ON setting key is shown, the corresponding setting is ON.

Touch the ON setting key to turn the setting OFF.

When the OFF setting is shown, the corresponding setting is OFF.

– CONTINUED –

Touch the OFF setting key to turn the setting ON.

When the Reverse Automatic Braking (RAB) system is turned OFF, the following indicator(s) will illuminate.

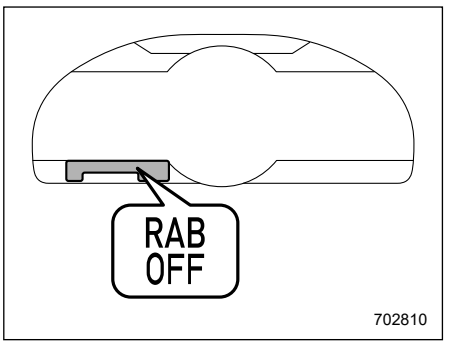

RAB OFF indicator

The RAB OFF indicator will turn off when the corresponding function is turned ON.

NOTE

• When the settings cannot be changed, the ON/OFF setting key will be grayed out.

• The ON/OFF setting key may be grayed out if the Reverse Automatic Braking (RAB) system malfunctions, etc. In this case, turn the ignition switch to the "OFF" position and then turn it to the "ON" position again. If the setting cannot be changed even after turning the ignition switch to the "ON" position again, consult your SUBARU dealer.

• As soon as you turn off the ignition switch, the Reverse Automatic Braking (RAB) ON/OFF setting is stored in the system. Therefore, when you turn the ignition switch from the "OFF" state to the "ON" position, the Reverse Automatic Braking (RAB) setting will revert to the state that was set before the ignition switch was turned off.

Also, the following settings can be changed by operating the center information display.

- Warning volume
- Reverse Automatic Braking (RAB)

For details, refer to "Car settings" ☞P169.

■ RAB Warning Indicator

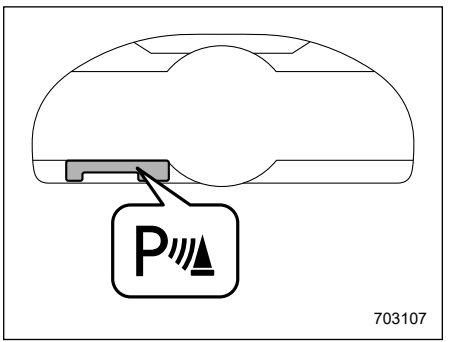

If the Reverse Automatic Braking (RAB) system malfunctions, the above indicator illuminates on the combination meter. Contact the nearest SUBARU dealer for details.

■ Handling of the Sonar Sensors

For details, refer to "Handling of the Sonar Sensors" ☞P295

7-21. Sonar Audible Alarm System (If Equipped)

The Sonar Audible Alarm system detects objects rearward and warns the driver by warning message on the center information display and warning beeps.

⚠ WARNING

- **The driver is responsible for driving safely. Before reversing, be sure to first depress the brake pedal and visually check the surroundings.**
- **The system is not designed to detect people (including children), animals or other moving objects.**
- **Depending on the vehicle condition or the surrounding environment, the sonar sensor's ability to detect objects may become unstable.**

■ Operating Conditions

The Sonar Audible Alarm System will operate when all of the following conditions are met.

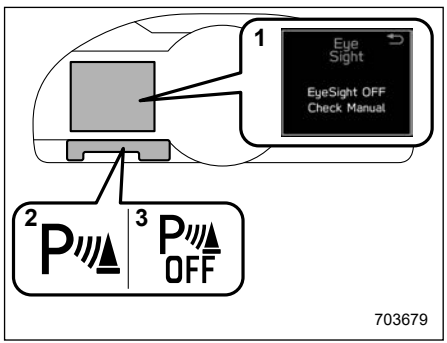

1) EyeSight warning indicator
2) RAB/Sonar Audible Alarm Warning Indicator
3) Sonar audible alarm OFF indicator

- The ignition switch is in the "ON" position.
- The EyeSight warning indicator is off.
- The RAB/Sonar Audible Alarm Warning Indicator is off.
- Sonar audible alarm OFF indicator is off.
- The select lever is in the "R" position.
- The Sonar Audible Alarm function is set to "ON".
- The vehicle speed is from 0 to 9 mph (0 to 15 km/h).

NOTE

• In the following cases, the Sonar Audible Alarm System will not operate. Promptly contact a SUBARU dealer to have the system inspected.
- The EyeSight warning indicator is illuminated.
- The RAB/Sonar Audible Alarm Warning Indicator is illuminated.
• In the following cases, the Sonar Audible Alarm System cannot be operated.
- The Sonar audible alarm OFF indicator is illuminated.
• In the following cases, the functions may not be able to properly work. Promptly contact a SUBARU dealer to have the system inspected.
- A sticker, paint, or a chemical is applied to the sonar sensors or the rear bumper.
- The rear bumper is modified.
- The rear bumper has been removed and attached.
- The ground clearance is changed due to the vehicle's loading condition or modification.
- There is damage to the sonar sensors or the rear bumper.

– CONTINUED –

- The rear bumper is exposed to strong impact, or the rear bumper is deformed.

• In the following situations, the system may not be able to detect an object correctly:
- When the vehicle is approaching diagonally to an object
- When the steering wheel is turned greatly

• The system may not be able to detect with the following objects.
- Sharp or thin objects such as poles, fences and ropes which may not reflect the sound wave emitted from the sonar sensor.
- Objects that are too close to the rear bumper when the select lever is set to the "R" position.
- Objects with a surface which may not reflect the sound wave emitted from the sonar sensor such as a chain link fence or bicycle.

• Objects the system is not designed to detect.
- Pedestrians.
- Moving objects including moving vehicles.
- Objects which absorbs sound waves such as cloth or snow.
- Objects whose surface has a diagonal angle.
- Objects that are low to the ground such as parking blocks.
- Objects that are high above the ground such as objects hanging from above.
- Objects that are out of range of the center of the vehicle in the horizontal direction.
- Objects that are not perpendicular to the ground.
- The surface of the object is uneven or wavy.

• When reversing the vehicle, the functions may not be able to work properly or may cause a system malfunction if the following conditions exist.

High frequency sound from other sources are nearby:
- Horn sound from another vehicle.
- Engine sound from other vehicles.
- Sound of an air brake.
- Vehicle detection equipment or a sonar from another vehicle.
- A sound wave with a frequency similar to the vehicle's system is transmitted near by.
- A vehicle equipped with the same system is reversing toward your reversing direction.

Weather conditions:
- Extremely high or extremely low temperatures in which the area near the sonar sensor becomes too hot or too cold to operate.
- The sonar sensors or the rear bumper near the sonar sensors are exposed to heavy rain or a significant amount of water.
- Fog, snow or sandstorm, etc.
- Air is moving rapidly such as when a strong wind is blowing.

Parts attached to the rear bumper near the sonar sensor:
- Commercial electronic parts (fog light, fender pole, radio antenna) are attached.
- Parts that emit high frequency sound, such as a horn or speaker, are attached.

Vehicle conditions:
- Ice, snow or mud is adhered to the sonar sensors or the rear bumper near the sonar sensor.
- The vehicle is significantly inclined.
- The ground clearance is significantly reduced due to the vehicle's loading condition, etc.
- When the sonar sensor is misaligned due to a collision or an accident.

Surrounding environment:

- A cloth banner, flag, hanging branch or railroad crossing bars are present in the reversing direction.
- When reversing on a gravel or grassy area.
- When reversing in an area where objects or walls are adjacent to the vehicle such as narrow tunnels, narrow bridges, narrow roads or narrow garages.
- Wheel track or hole is present in the ground of the reversing direction.
- When reversing over a drainage cover (grating cover).

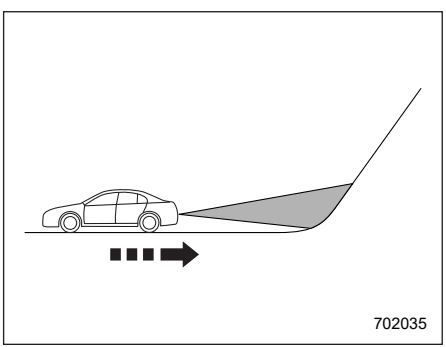

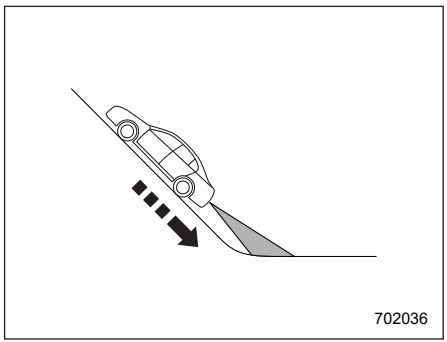

- The path of the reversing direction is inclined such as on a steep uphill.
- When reversing downhill.

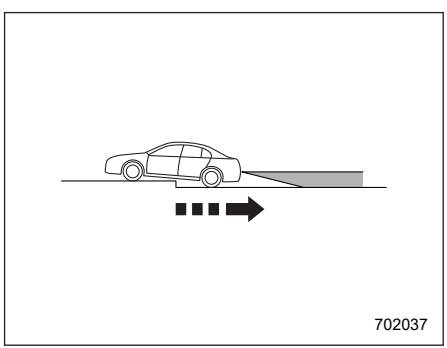

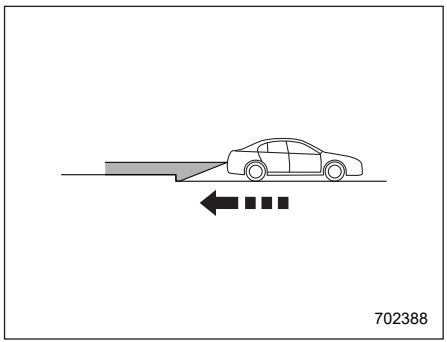

- Reversing in a garage with a low ceiling or a tunnel.
- A curb or step is present in the reversing direction.
- There is a patch of snow rearward.
- There is a puddle of water.
- There is an obstacle that is next to an object.
- Going back along a wall.
- The area where the road starts touching dirt and snow
- When reversing on an uneven road.

– CONTINUED –

■ Sonar Audible Alarm operation

When the shift lever is shifted to “R” (the shift position indicator on the meter changes to “R”) and the system detects an object, the distance range to the object is displayed on the center information display and a warning sound is made.

The warning sound changes depending on the distance range to the object (intermediate/closer/the closest). As the vehicle is closer to the object, the sound interval becomes shorter.

NOTE

It may take time to display the wall and sound warning beeps after the object was recognized by the Sonar Audible Alarm function.

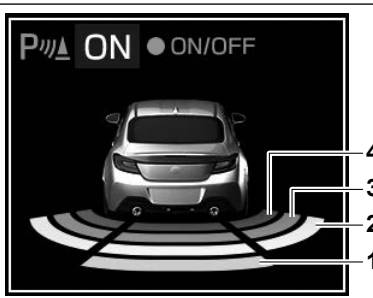

Warning sound pattern	**Distance range to detected object***	Distance to object display	Alarm pattern
1) Long distance warning	Approx. 43 to 59 in (110 to 150 cm)	Green	No warning sound
2) Medium distance warning	Approx. 28 to 43 in (70 to 110 cm)	Yellow	Short beeps
3) Approaching warning	Approx. 20 to 28 in (50 to 70 cm)	Orange	Rapid short beeps
4) Most approaching warning	Approx. 20 in (50 cm) or less	Red	Continuous beep

*: Range of detection may vary depending on the environmental condition.

▼ **Obstacle detected and alert level**

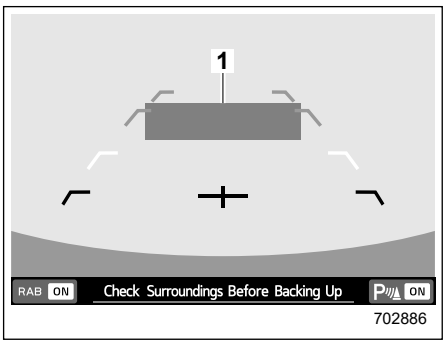

Long proximity alert (object detected)
1) Green: 43 to 59 in (110 to 150 cm)

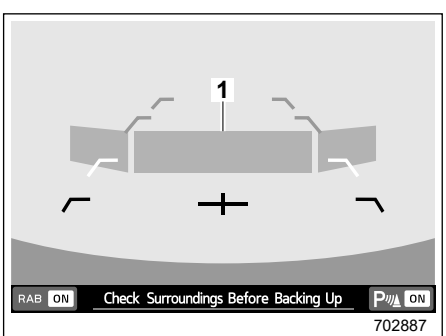

Medium proximity alert (approaching the object)
1) Yellow: 28 to 43 in (70 to 110 cm)

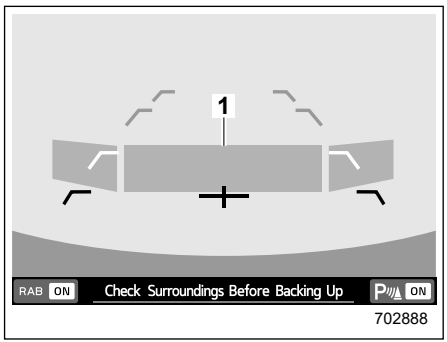

Short proximity alert (approaching the object closer)
1) Orange: 20 to 28 in (50 to 70 cm)

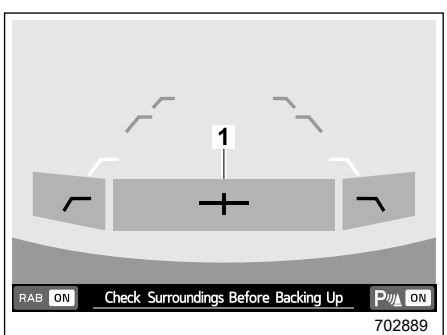

Closest proximity alert (too close to the object)
1) Red: 20 in (50 cm) or less

■ Suspension of the Sonar Audible Alarm

In a situation such as the following, the Sonar Audible Alarm may be suspended:

- When a sonar sensor is dirty or covered with ice, snow, etc.
- When a sound whose frequency is close to that of the Sonar Audible Alarm is detected

The sonar audible alarm OFF indicator will illuminated and a pop up screen will be displayed.

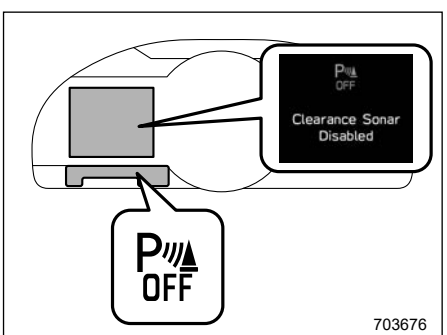

– CONTINUED –

■ Sonar audible alarm warning indicator and warning display

When a malfunction is detected in the system, the warning indicator will illuminate and a warning message will be displayed. Contact your SUBARU dealer for assistance.

▼ MT models

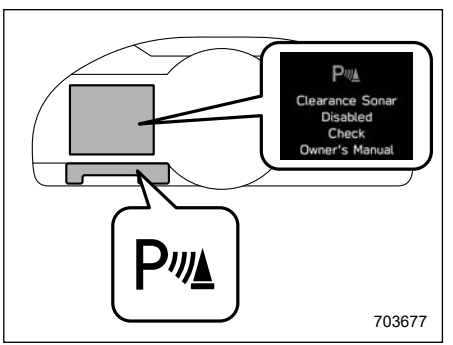

▼ AT models

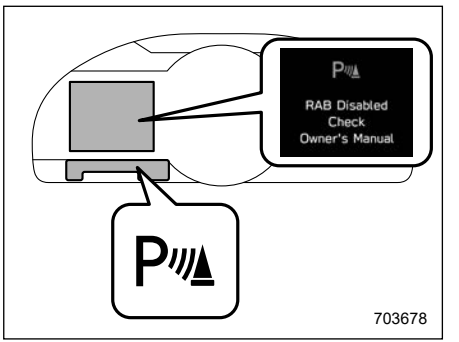

■ When the Sonar Audible Alarm is enabled/disabled

While the shift lever is shifted to the "R" position, the Sonar Audible Alarm can also be enabled/disabled by pressing ⊙ of the meter operation switch or operating the center information display.

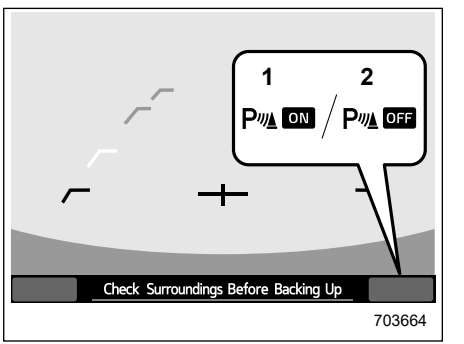

1) ON setting key of the Sonar Audible Alarm
2) OFF setting key of the Sonar Audible Alarm

When the ON setting key is shown, the corresponding setting is ON.

Touch the ON setting key to turn the setting OFF.

When the OFF setting is shown, the corresponding setting is OFF.

Touch the OFF setting key to turn the setting ON.

When the Sonar Audible Alarm function are turned OFF, the following indicator(s) will illuminate.

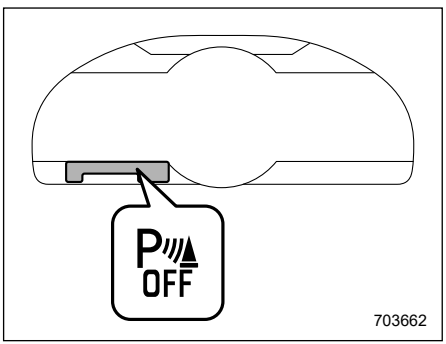

Sonar Audible Alarm OFF indicator

NOTE

• When the settings cannot be changed, the ON/OFF setting key will be grayed out.

• The ON/OFF setting key may be grayed out if the Reverse Automatic Braking (RAB) system malfunctions, etc. In this case, turn the ignition switch to the "OFF" position and then turn it to the "ON" position again. If the setting cannot be changed even after turning the ignition switch to the "ON" position again, contact your SUBARU dealer.

• When you turn the ignition switch off, the Sonar Audible Alarm ON/OFF settings will always reset, and the system will not store the settings of the function. Therefore, every time you turn the ignition switch to the "ON" position, the Sonar Audible Alarm will turn on automatically.

Settings of the following items can be changed on the center information display:

- **Warning volume**
- **Sonar Audible Alarm**

For details, refer to "Car settings" ☞P169.

■ Handling of the Sonar Sensors

The 4 sonar sensors are located in the rear bumper. To ensure the proper operation of the Sonar Audible Alarm system and the Reverse Automatic Braking (RAB) System (if equipped), observe the following precautions.

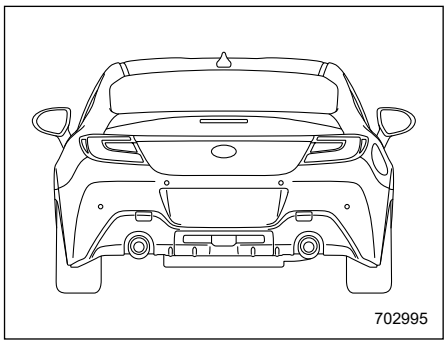

- Do not affix any stickers or other items on the sonar sensor or the rear bumper surface.
- Always keep the sonar sensor and the rear bumper surface clean.
- Do not modify rear bumper.
- Do not paint the rear bumper.
- Do not apply high pressure water to the sonar sensors with a high pressure car-washing machine.
- Do not apply strong impacts to the rear bumper. If a sensor becomes misaligned, a system malfunction may occur, including inability to detect objects in the reversing direction. If any strong impact is applied to the rear bumper, contact a SUBARU dealer to have the system inspected.
- Do not disassemble the sonar sensors.

– CONTINUED –

NOTE

If the sonar sensors require repair or replacement, or if the area of the rear bumper near the sonar sensors requires repair, paintwork or replacement, we recommend that you contact your SUBARU dealer for assistance.

8-1. New Vehicle Break-In Driving – the First 1,000 miles (1,600 km) 298
8-2. Fuel Economy Hints 298
8-3. Engine Exhaust Gas (Carbon Monoxide) 298
8-4. Catalytic Converter 299
8-5. Periodic Inspections 300
8-6. Driving in Foreign Countries 300
8-7. Frequent Driving Prevents Vehicle Battery from Discharging 300
8-8. Driving Tips 301
8-9. Winter Driving 302
Operation during Cold Weather 302
Driving on Snowy and Icy Roads 303
Corrosion Protection 304
Snow Tires 304
Tire Chains 305
Rocking the Vehicle 305
8-10.Loading Your Vehicle 306
Vehicle Capacity Weight 307
GVWR and GAWR (Gross Vehicle Weight Rating and Gross Axle Weight Rating) 307
8-11.Trailer Towing 308

8-1. New Vehicle Break-In Driving – the First 1,000 miles (1,600 km)

The performance and long life of your vehicle are dependent on how you handle and care for your vehicle while it is new. Follow these instructions during the first 1,000 miles (1,600 km):

- Do not race the engine. And do not allow engine speed to exceed 4,000 rpm except in an emergency.
- Do not drive at one constant engine or vehicle speed for a long time, either fast or slow.
- Avoid starting suddenly and rapid acceleration, except in an emergency.
- Avoid hard braking, except in an emergency.

The same break-in procedures should be applied to a newly installed or overhauled engine or when brake pads are replaced with new ones.

8-2. Fuel Economy Hints

The following suggestions will help to save your fuel.

- Select the proper gear position for the speed and road conditions.
- Avoid sudden acceleration or deceleration. Always accelerate gently until you reach the desired speed. Then try to maintain that speed for as long as possible.
- Do not pump the accelerator and avoid racing the engine.
- Avoid unnecessary engine idling.
- Keep the engine properly tuned.
- Keep the tires inflated to the correct pressure shown on the tire inflation pressure label, which is located on the driver's center pillar. Low pressure will increase tire wear and fuel consumption.
- Use the air conditioner only when necessary.
- Keep the front and rear wheels in proper alignment.
- Avoid carrying unnecessary luggage or cargo.

8-3. Engine Exhaust Gas (Carbon Monoxide)

⚠ WARNING

- **Never inhale engine exhaust gas. Engine exhaust gas contains carbon monoxide, a colorless and odorless gas which is dangerous, or even lethal, if inhaled.**
- **Always properly maintain the engine exhaust system to prevent engine exhaust gas from entering the vehicle.**
- **Never run the engine in a closed space, such as a garage, except for the brief time needed to drive the vehicle in or out of it.**
- **Avoid remaining in a parked vehicle for a long time while the engine is running. If that is unavoidable, then use the ventilation fan to force fresh air into the vehicle.**
- **Always keep the front ventilator inlet grille free from snow, leaves or other obstructions to ensure that the ventilation system always works properly.**

- **If at any time you suspect that exhaust fumes are entering the vehicle, have the problem checked and corrected as soon as possible. If you must drive under these conditions, drive only with all windows fully open.**
- **Keep the trunk lid closed while driving to prevent exhaust gas from entering the vehicle.**

NOTE

Due to the expansion and contraction of the metals used in the manufacture of the exhaust system, you may hear a crackling sound coming from the exhaust system for a short time after the engine has been shut off. This sound is normal.

8-4. Catalytic Converter

⚠ WARNING

- **Avoid fire hazards. Do not drive or park the vehicle anywhere near flammable materials (e.g. grass, paper, rags or leaves), because the catalytic converter operates at very high temperatures.**
- **Keep everyone and flammable materials away from the exhaust pipe while the engine is running. The exhaust gas is very hot.**

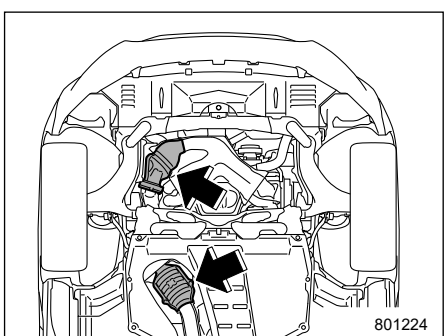

The catalytic converter is installed in the exhaust system. It serves as catalyst to reduce HC, CO and NOx in exhaust gases, thus providing cleaner exhaust.

To avoid damage to the catalytic converter:

- Use only unleaded gasoline. Even a small amount of leaded gasoline will damage the catalytic converter.
- Never start the engine by pushing or pulling the vehicle.
- Avoid racing the engine.
- Never turn off the ignition switch while the vehicle is moving.
- Keep your engine tuned-up. If you feel the engine running rough (misfiring, back-firing or incomplete combustion), have your vehicle checked and repaired by an authorized SUBARU dealer.
- Do not apply undercoating or rust prevention treatment to the exhaust system.
- Do not drive with an extremely low fuel level.

8-5. Periodic Inspections

To keep your vehicle in the best condition at all times, always have the recommended maintenance services listed in the maintenance schedule in the “Warranty and Maintenance Booklet” performed at the specified time or mileage intervals.

8-6. Driving in Foreign Countries

When planning to use your vehicle in another country:

- Confirm the availability of the correct fuel. Refer to "Fuel Requirements" ☞P227.
- Comply with all regulations and requirements of each country.

8-7. Frequent Driving Prevents Vehicle Battery from Discharging

Vehicle batteries are a consumable item. If the battery charge is not maintained regularly, the battery will deteriorate and may require replacement sooner than expected.

The battery is charged by running the engine.

It is recommended to drive the car for a longer time occasionally to prevent the vehicle battery from becoming drained, especially if it is regularly driven only a short time daily (e.g. only 10 minutes) or if it is parked for 10 days or more. It may be possible to recover the state of charge and maintain the battery performance by driving for a longer time (e.g. more than 30 minutes).

If you cannot drive enough, we recommend to charge the battery as needed. If no action is taken, the battery will become discharged.

This is a normal characteristic of any battery.

8-8. Driving Tips

⚠ WARNING

- Always maintain a safe driving speed according to the road and weather conditions in order to avoid having an accident on a sharp turn, during sudden braking or under other similar conditions.
- When replacing or installing tire(s), all four tires must be the same for the following items.

  (a) Size

  (b) Speed symbol

  (c) Load index

  (d) Circumference

  (e) Construction

  (f) Manufacturer

  (g) Brand (tread pattern)

  (h) Degrees of wear

  For items (a) to (c), you must obey the specification that is printed on the tire inflation pressure label. The tire inflation pressure label is located on the driver's center pillar.

  If all four tires are not the same in items (a) to (h), serious mechanical damage could be caused to the drivetrain of the car, and affect the followings.

  - Ride
  - Handling
  - Braking
  - Speedometer/Odometer calibration
  - Clearance between the body and the tires

  It also may be dangerous and lead to loss of vehicle control, and it can lead to an accident.
- In a rollover crash, an unbelted person is significantly more likely to die than a person wearing a seat belt. The driver and all your passengers should fasten their seatbelts before starting to drive in order to minimize the chance of serious injury or death.
- Do not make sharp turns or quick maneuvers unless absolutely unavoidable. Such actions are dangerous as you may lose control, possibly resulting in a rollover which could cause death or serious injury.
- Whenever strong crosswinds are present, slow down sufficiently to maintain control of your vehicle.
- Never attempt to drive through pools and puddles, or roads flooded with water. Water entering the engine air intake or the exhaust pipe or water splashing onto electrical parts may damage your vehicle and may cause it to stall. In this case, contact your SUBARU dealer immediately. Regardless of its depth, it can wash away the ground from under your tires, resulting in possible loss of traction and even vehicle rollover.

⚠ CAUTION

After driving on gravel roads or rough roads, check the undercarriage of the vehicle body for any damage, deformation, or paint removal. If you notice any irregularities, contact a SUBARU dealer for an inspection as soon as possible.

8-9. Winter Driving

■ Operation during Cold Weather

Carry some emergency equipment, such as a window scraper, a bag of sand, flares, a small shovel and jumper cables.

Check the battery and cables. Cold temperatures reduce battery capacity. The battery must be in good condition to provide enough power for cold winter starts.

It normally takes longer to start the engine in very cold weather conditions. Use an engine oil of a proper grade and viscosity for cold weather. Using heavy summer oil will make it harder to start the engine.

Keep the door locks from freezing by squirting them with deicer or glycerin.

Forcing a frozen door open may damage or separate the rubber weather strips around the door. If the door is frozen, use hot water to melt the ice, and afterwards thoroughly wipe the water away.

Use a windshield washer fluid that contains an antifreeze solution. Do not use engine antifreeze or other substitutes because they may damage the paint of the vehicle.

If you fill the windshield washer fluid tank with a fluid with a different concentration from the one used previously, purge the old fluid from the piping between the windshield washer fluid tank and washer nozzles by operating the washer for a certain period of time. Otherwise, if the concentration of the fluid remaining in the piping is too low for the outside temperature, it may freeze and block the nozzles.

⚠ CAUTION

- **Adjust the washer fluid concentration appropriately for the outside temperature. If the concentration is inappropriate, sprayed washer fluid may freeze on the windshield and obstruct your view, and the fluid may freeze in the windshield washer fluid tank.**
- **State or local regulations on volatile organic compounds may restrict the use of methanol, a common windshield washer antifreeze additive. Washer fluids containing non-methanol antifreeze agents should be used only if they provide cold weather protection without damaging your vehicle's paint, wiper blades or washer system.**

▼ Before driving your vehicle

Before entering the vehicle, remove any snow or ice from your shoes because that could make the pedals slippery and driving dangerous.

While warming up the vehicle before driving, check that the accelerator pedal, brake pedal, and all other controls operate smoothly.

Clear away ice and snow that has accumulated under the fenders to avoid making steering difficult. During severe winter driving, stop when and where it is safe to do so and check under the fenders periodically.

▼ Parking in cold weather

⚠ WARNING

Snow can trap dangerous exhaust gases under your vehicle. Keep snow clear of the exhaust pipe and from around your vehicle if you park the vehicle in snow with the engine running.

⚠ CAUTION

- **Do not use the parking brake when parking for long periods in cold weather since it could freeze in that position.**
- **When the vehicle is parked in snow or when it snows, raise the wiper blades off the glass to prevent damage to them.**
- **Under either of the following conditions, icing may develop on the brake system, which could cause poor braking action.**
  - **When the vehicle has been left parked after use on roads heavily covered with snow**
  - **When the vehicle has been left parked during a snowstorm**

  Check for snow or ice buildup on the suspension, disc brakes and brake hoses underneath the vehicle. If there is caked snow or ice, remove it, being careful not to damage the disc brakes and brake hoses and ABS harness.

When parking for long periods in cold weather, you should observe the following tips.

1. For MT models, place the shift lever in the “1” or “R” position. For AT models, place the select lever in the “P” position.
2. Use tire stops under the tires to prevent the vehicle from moving.

▼ Refueling in cold weather

To help prevent moisture from forming in the fuel system and the risk of its freezing, use of an antifreeze additive in the fuel tank is recommended during cold weather.

Use only additives that are specifically designed for this purpose. When an antifreeze additive is used, its effect lasts longer if the tank is refilled whenever the fuel level reaches half empty.

If your SUBARU is not going to be used for an extended period, it is best to have the fuel tank filled to capacity.

■ Driving on Snowy and Icy Roads

⚠ WARNING

Do not use the cruise control on slippery roads such as snowy or icy roads. This may cause loss of vehicle control.

⚠ CAUTION

Avoid prolonged continuous driving in snowstorms. Snow will enter the engine’s intake system and may hinder the airflow, which could result in engine shutdown or even breakdown.

To prevent skidding and slipping, avoid sudden braking, abrupt acceleration, high-speed driving, and sharp turning when driving on snowy or icy roads.

Always maintain ample distance between your vehicle and the vehicle ahead of you to avoid the need for sudden braking.

To supplement the foot brake, use the engine brake effectively to control the vehicle speed. (Shift into a lower gear when necessary.)

– CONTINUED –

Avoid shifting down abruptly. Such behavior can cause the wheels to lock, possibly leading to loss of vehicle control.

An anti-lock brake system (ABS) enhances your vehicle's braking performance on snowy and icy roads. For information about braking on slippery surfaces, refer to "ABS (Anti-Lock Brake System)" ☞P251 and "Vehicle Stability Control (VSC)/TRAC System" ☞P253.

For AT models, use the Snow mode when driving on snowy or icy roads. For details about how to use the mode, refer to "Driving Mode Select Switch" ☞P246.

▼ Wiper operation when snowing

Before driving in cold weather, make sure the wiper blade rubbers are not frozen to the windshield.

If the wiper blade rubbers are frozen to the windshield, use the defroster with the airflow selection in "" and the temperature set for maximum warmth until the wiper blade rubbers are completely thawed. Refer to "Climate Control Panel" ☞P202.

Snow stuck on the wiper arm prevents the wiper from working effectively. If snow is stuck on the wiper arm, pull off the road to a safe place, then remove it. If you stop the vehicle at road side, use the hazard warning flasher to alert other drivers. Refer to "Hazard Warning Flasher" ☞P131.

We recommend use of non-freezing type wiper blades (winter blades) during the seasons you could have snow and freezing temperatures. Blades of this type give superior wiping performance in snowy conditions. Be sure to use blades that are suitable for your vehicle.

⚠ CAUTION

During high-speed driving, non-freezing type wiper blades may not perform as well as standard wiper blades. If this happens, reduce the vehicle speed.

NOTE

When the season requiring non-freezing type wiper blades is over, replace them with standard wiper blades.

■ Corrosion Protection

Refer to "Corrosion Protection" ☞P338.

■ Snow Tires

⚠ WARNING

- **When replacing or installing winter tire(s), all four tires must be the same for the following items.**

  (a) Size

  (b) Speed symbol

  (c) Load index

  (d) Circumference

  (e) Construction

  (f) Manufacturer

  (g) Brand (tread pattern)

  (h) Degrees of wear

  For items (a) to (c), you must obey the specification that is printed on the tire inflation pressure label. The tire inflation pressure label is located on the driver's center pillar.

  If all four tires are not the same in items (a) to (h), serious mechanical damage could be caused to the drivetrain of the car, and affect the followings.

- **Ride**
- **Handling**
- **Braking**
- **Speedometer/Odometer calibration**
- **Clearance between the body and the tires**

It also may be dangerous and lead to loss of vehicle control, and it can lead to an accident.

- **Do not use a combination of radial, belted bias or bias tires since it may cause dangerous handling characteristics and lead to an accident.**

In winter, it may be possible to enhance performance through use of tires designed specifically for winter driving conditions.

If you choose to install winter tires on your vehicle, be sure to use the correct tire size and type.

You must install four winter tires that are of the same size, construction, brand and load range and you should never mix radial, belted bias or bias tires since this may result in dangerous handling characteristics. When you choose a tire, make sure that there is enough clearance between the tire and vehicle body.

Remember to drive with care at all times regardless of the type of tires on your vehicle.

■ Tire Chains

⚠ CAUTION

Tire chains cannot be used on your vehicle because of the lack of clearance between the tires and vehicle body.

NOTE

When tire chains cannot be used, use of another type of traction device (such as spring chains) may be acceptable if use on your vehicle is recommended by the device manufacturer, taking into account tire size and road conditions. Follow the device manufacturer's instructions, especially regarding maximum vehicle speed.

To help avoid damage to your vehicle, drive slowly, readjust or remove the device if it is contacting your vehicle, and do not spin your wheels. Damage caused to your vehicle by use of a traction device is not covered under warranty.

Make certain that any traction device you use is an SAE class S device, and use it on the rear wheels only. Always use the utmost care when driving with a traction device. Overconfidence because you are using a traction device could easily lead to a serious accident.

■ Rocking the Vehicle

If you must rock the vehicle to free it from snow, sand, or mud, depress the accelerator pedal slightly and move the shift lever/select lever back and forth between "1" (MT model)/"D" (AT model) and "R" repeatedly. Do not race the engine. For the best possible traction, avoid spinning the wheels when trying to free the vehicle.

When the road surface is extremely slippery, you can obtain better traction by starting the vehicle with the transmission in 2nd than in 1st (MT models).

If your vehicle is a AT model, Snow mode can be used. For details about how to use the mode, refer to "Driving Mode Select Switch" ☞P246.

8-10. Loading Your Vehicle

⚠ WARNING

Never allow passengers to ride on a folded rear seatback or in the trunk. Doing so may result in serious injury.

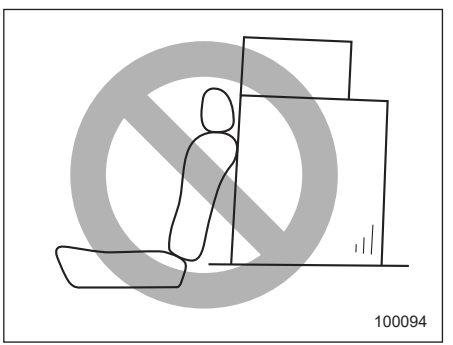

⚠ WARNING

- **Never stack luggage or other cargo higher than the top of the seatback because it could tumble forward and injure passengers in the event of a sudden stop or accident. Keep luggage or cargo low, as close to the floor as possible.**
- **Stow cargo and luggage in the trunk whenever possible.**
- **To prevent cargo and luggage from sliding forward during braking, do not stack anything in the enlarged trunk. Keep cargo and luggage low, as close to the floor as possible.**
- **When you carry something inside the vehicle, secure it whenever you can to prevent it from being thrown around inside the vehicle during sudden stops, sharp turns or in an accident.**
- **Secure long items properly to prevent them from shooting forward and causing serious injury during a sudden stop.**
- **Never exceed the maximum load limit. If you do, some parts on your vehicle can break, or it can change the way your vehicle handles. This could result in loss of control and cause personal injury. Also, overloading can shorten the life of your vehicle.**
- **Do not place cargo or luggage in or on the following locations as the item may get under the clutch, brake, or accelerator pedal and prevent the pedals from being depressed properly, block the driver's vision, or hit the driver or passengers, causing an accident:**
  - **At the feet of the driver**
  - **On the front passenger or rear seats (when stacking items)**
  - **On the rear shelf**
  - **On the instrument panel**
  - **On the dashboard**

⚠ CAUTION

Do not carry spray cans, containers with flammable or corrosive liquids or any other dangerous items inside the vehicle.

NOTE

For better fuel economy, do not carry unneeded cargo.

■ Vehicle Capacity Weight

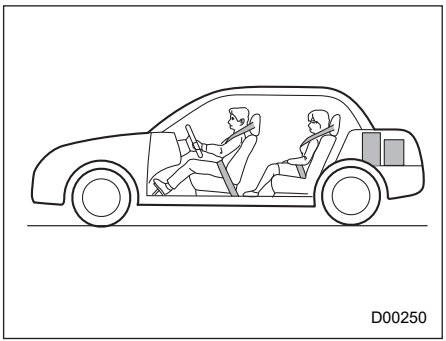

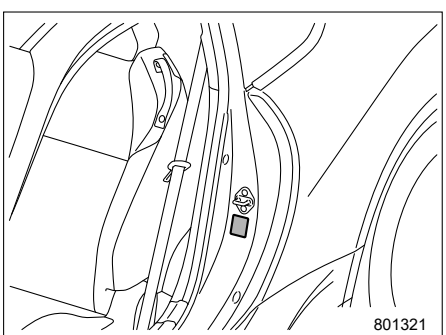

The load capacity of your vehicle is determined by weight, not by available cargo space. The maximum load you can carry in your vehicle is shown on the tire inflation pressure label attached to the driver's side center pillar. It includes the total weight of the driver and all passengers, their belongings, and any optional equipment.

■ GVWR and GAWR (Gross Vehicle Weight Rating and Gross Axle Weight Rating)

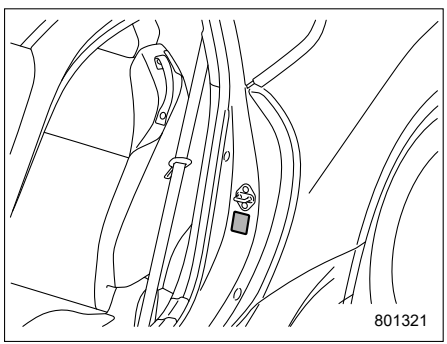

Certification label

The certification label attached to the driver's side center pillar shows GVWR (Gross Vehicle Weight Rating) and GAWR (Gross Axle Weight Rating).

The GVW (Gross Vehicle Weight) must never exceed the GVWR. GVW is the combined total of weight of the vehicle, fuel, driver, all passengers, luggage, and any optional equipment. Therefore, the GVW changes depending on the situation.

In addition, the total weight applied to each axle (GAW) must never exceed the GAWR. The front and rear GAWs can be adjusted by relocating luggage inside the vehicle.

Even if the total weight of your luggage is lower than the vehicle capacity weight, improper distribution may cause the front or rear GAW to exceed GAWR, which must not be exceeded under any circumstances.

When possible, the load should be evenly distributed throughout the vehicle.

If you carry heavy loads in the vehicle, you should confirm that GVW and front and rear GAWs are within the GVWR and GAWR by putting your vehicle on a vehicle scale, found at a commercial weighing station.

Do not use replacement tires with a lower load range than the originals because they may lower the GVWR and GAWR limitations. Replacement tires with a higher load range than the originals do not increase the GVWR and GAWR limitations.

8-11. Trailer Towing

⚠ CAUTION

Your vehicle is neither designed nor intended to be used for trailer towing. Therefore, never tow a trailer with your vehicle.

SUBARU assumes no responsibility for injuries or vehicle damage that may result from trailer towing, from any trailer towing equipment or from any errors or omissions in the instructions accompanying such equipment. SUBARU warranties do not apply to vehicle damage or malfunction caused by trailer towing.

9-1. If You Park Your Vehicle in an Emergency.....310
9-2. Maintenance Tools.....310
9-3. Flat Tires.....311
Sealing a Flat Tire.....311
Tire Pressure Monitoring System (TPMS) (If Equipped).....319
TPMS Screen (If Equipped).....320
9-4. Jump Starting.....320
Battery Precautions.....320
How to Jump Start.....321
9-5. Engine Overheating.....323
If Steam Is Coming from the Engine Compartment.....323
If No Steam Is Coming from the Engine Compartment.....323
9-6. Towing.....324
Towing Hook and Tie-Down Hooks/Holes.....324
Using a Flat-Bed Truck.....328
Towing with All Wheels on the Ground.....328
9-7. Access Key Fob – If Access Key Fob Does Not Operate Properly.....329
Locking and Unlocking.....330
Switching Power Status.....330
Starting Engine.....330
9-8. Malfunctions of the Center Information Display.....331
9-9. If the Power Window Does Not Close.....332
9-10.If Your Vehicle Is Involved in an Accident.....333
To Restart the Engine When Involved in an Accident.....333

9-1. If You Park Your Vehicle in an Emergency

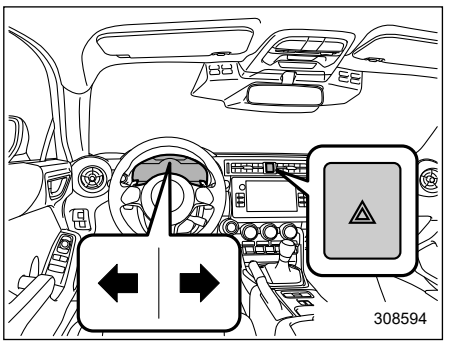

The hazard warning flasher should be used in day or night to warn other drivers when you have to park your vehicle under emergency conditions.

Avoid stopping on the road. It is best to safely pull off the road if a problem occurs.

The hazard warning flasher can be activated regardless of the ignition switch position.

Turn on the hazard warning by pressing the hazard warning flasher switch. Turn it off by pressing the switch again.

When the hazard warning flasher are flashing, the corresponding turn signal indicator will also flash.

NOTE

When the hazard warning flasher is on, the turn signals do not work.

9-2. Maintenance Tools

Your vehicle is equipped with the following maintenance tools.

- Jack
- Jack handle
- Screwdriver
- Towing hook (eye bolt)
- Wheel nut wrench

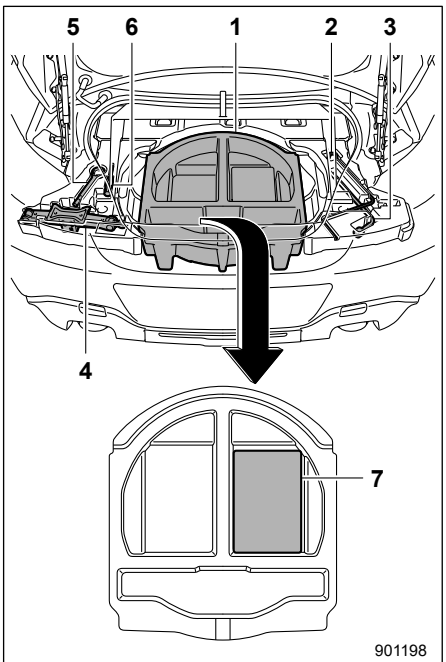

1) Under-floor storage compartment
2) Jack handle
3) Wheel nut wrench
4) Jack
5) Towing hook (eye bolt)
6) Screwdriver
7) Flat tire repair kit

9-3. Flat Tires

If you have a flat tire while driving, never brake suddenly; keep driving straight ahead while gradually reducing speed. Then slowly pull off the road to a safe place.

■ Sealing a Flat Tire

⚠ WARNING

Read these instructions and warnings carefully before sealing a flat tire.

Compliance with these instructions is vital to ensuring vehicle safety. Noncompliance with these instructions means risking tire damage, which can affect vehicle handling and lead to loss of vehicle control. This may result in serious injury or death.

If the tire is punctured, you can seal the flat tire temporarily by using the flat tire repair kit. You can seal a flat tire caused, for example, by nails or similar objects with less than 0.2 in (4 mm). However, depending on the type and extent of tire damage, some tires can only be partially sealed or not sealed at all, and this condition may cause a loss of tire pressure. A loss of tire pressure can affect vehicle handling, leading to the loss of vehicle control.

After sealing the flat tire temporarily, change the tires with new ones as soon as possible. We recommend that you have the sealed tire changed by your nearest SUBARU dealer. You may reuse the wheel if the attached sealant is wiped off, but the valve of the wheel must be replaced with a new one. If you reuse the wheel without replacing the valve, air may leak from the valve.

For tire replacement, refer to "Tire Replacement" ☞P370.

– CONTINUED –

▼ Safety precautions when sealing a flat tire

Observe the following rules when sealing a flat tire.

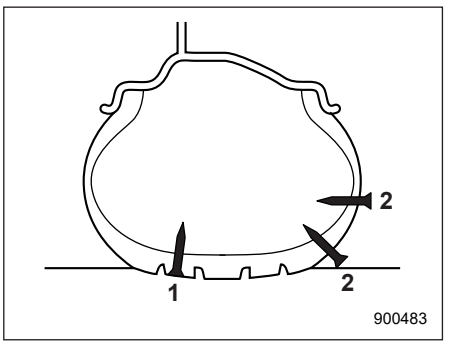

1) Sealing is possible
2) Sealing is not possible

⚠ WARNING

- **Do not use the flat tire repair kit in the following cases.**
  - **The tire has already been damaged as a result of being driven in the under inflated condition.**
  - **The tire damage is not located within the visible tread of the tire.**
  - **The tire damage is on the sidewall of the tire.**
  - **When the tire has been taken off of the wheel.**
  - **The wheel or the tire valve of the flat tire is damaged.**
  - **Two or more tires have been punctured.**
  - **The expiration date of the sealant has passed.**
  - **The tire is punctured by pointed items such as nails of 0.2 in (4 mm) or larger.**
- **When inflating the flat tire, if the tire inflation pressure does not reach the green zone of the pressure gauge within 10 minutes, do not continue to seal the tire. We recommend that you contact your SUBARU dealer.**
- **Drive with caution and avoid making sudden steering or driving maneuvers.**
- **Do not exceed a maximum speed of 50 mph (80 km/h).**
- **Do not exceed a maximum driving distance of 620 miles (1,000 km).**
- **Do not use tire chains on a sealed tire.**
- **Do not tow a trailer.**
- **If used for a purpose other than sealing a flat tire, the flat tire repair kit may cause a severe accident or injury due to the fact that compressed air can act as an explosive or propellant.**
- **Safely park your vehicle on the roadside so that you do not obstruct the flow of traffic and so that you are able to seal the flat tire without being in danger.**
- **Apply the parking brake, even if the vehicle is parked on a level road, to make sure that the vehicle will not move.**
- **Stop the engine before sealing the flat tire.**
- **Turn on the hazard warning flasher while sealing the flat tire.**
- **Do not attempt to remove foreign objects like nails or screws that have penetrated the tire. Leave them as they are.**
- **Never leave the flat tire repair kit unattended while in use.**
- **Only one tire can be repaired with one bottle of sealant.**
- **The tires can be repaired when the ambient temperature is −22 °F (−30 °C) or higher.**

⚠ CAUTION

- **Remember that the flat tire repair kit only provides temporary mobility. Regulations concerning tire repair after usage of flat tire repair kit may differ from country to country. We recommend that you consult your SUBARU dealer or tire dealer for advice.**
- **Store the flat tire repair kit safely and secure it under the floor of the trunk. Storing it anywhere in the passenger compartment is not advisable because it could strike an occupant in the event of a sudden stop or collision and cause injury.**
- **Use the flat tire repair kit with original vehicle tires only.**
- **Do not keep the air compressor operating for more than 15 minutes, otherwise there is a risk of overheating.**
- **The temperature of the air compressor may become high. Be careful not to burn yourself.**
- **When raining, take measures to prevent the air compressor from being exposed directly to the rain. Exposing to rain may cause a malfunction.**
- **Do not use air compressors other than the one in the repair kit. Using an air compressor other than the one in the repair kit may damage the tires.**
- **Do not disassemble or modify the air compressor to enable the use of a power supply or a battery other than DC 12 V.**
- **If a temporary puncture repair is performed with the repair kit, the Tire Pressure Monitoring System (TPMS) (if equipped) may not operate normally.**

▼ Location of the flat tire repair kit

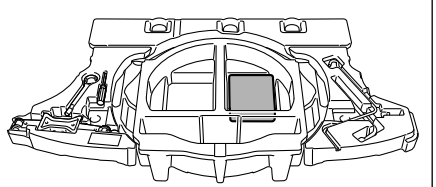

Flat tire repair kit

The flat tire repair kit is stored in the portion shown in the illustration.

▼ Contents of the flat tire repair kit

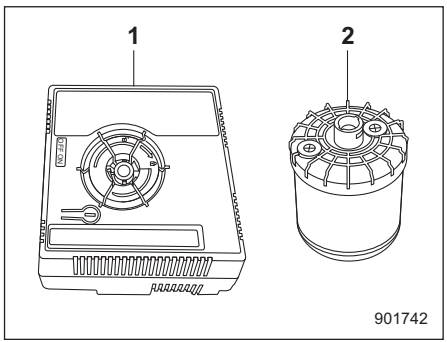

1) Air compressor
2) Sealant bottle

The above repair kits are packed in a bag. Return them to the bag after use.

– CONTINUED –

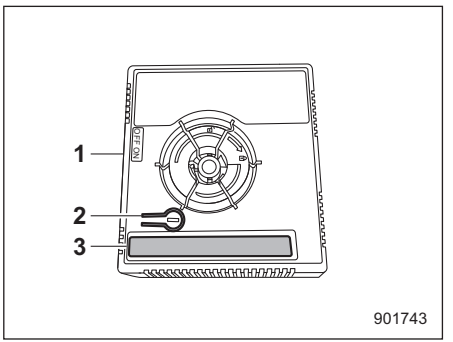

Air compressor (front side)
1) Compressor switch
2) Air release button
3) Air gauge

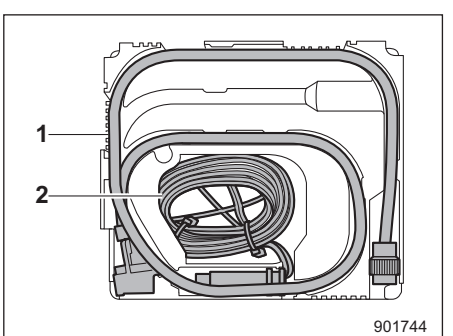

Air compressor (rear side)
1) Hose
2) Power plug

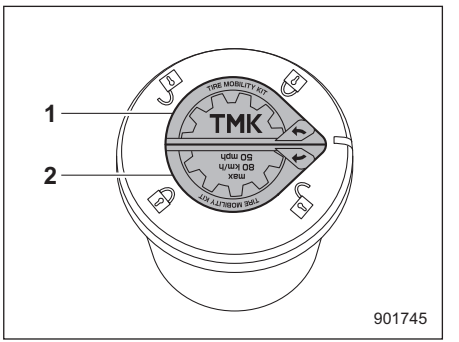

Sealant bottle
1) Tire Mobility Kit label
2) Speed limit label

⚠ WARNING

- **Do not drink the sealant. If the sealant is accidentally swallowed, seek medical attention immediately.**
- **If the sealant splashes onto your skin or eyes, wash it away immediately with plenty of water. If necessary, seek medical attention immediately.**
- **Keep the flat tire repair kit out of the reach of children.**
- **If a person who is allergic to natural rubber comes in contact the sealant, allergy symptoms may occur.**

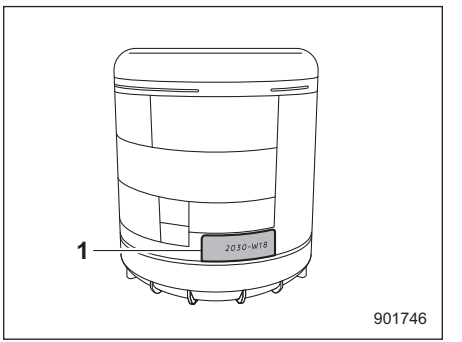

1) Expiration date

⚠ CAUTION

Replace the sealant bottle with a new one before the expiration date passes.

▼ How to seal the flat tire

To seal the flat tire, perform the following steps.

- First, pump in the sealant and air. Drive the vehicle for approximately 15 minutes or 6 miles (10 km) so that the sealant can seal the damaged area.
- Stop the vehicle again, check and, if necessary, adjust the pressure of the damaged tire.
- After that, you can continue to drive carefully no faster than 50 mph (80 km/h) and within the maximum distance of 620 miles (1,000 km).

Inform all other users of the vehicle that the tire has been temporarily sealed with the flat tire repair kit and make them aware of the special driving conditions to be observed.

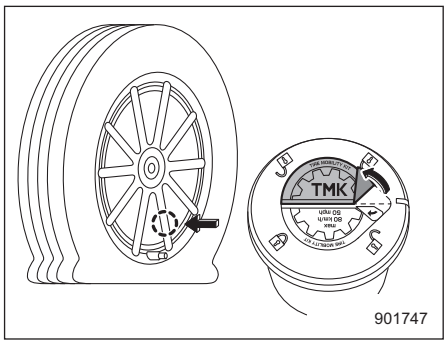

1. Before starting the tire puncture repair, attach the Tire Mobility Kit label to the wheel that you are going to repair.

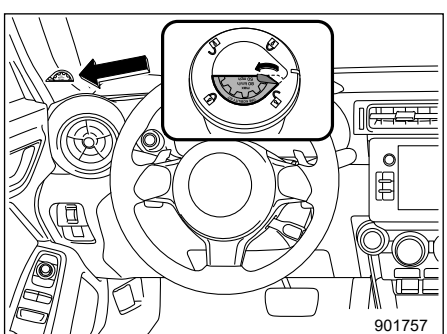

2. Attach the speed limit label in the position shown in the illustration.

⚠ WARNING

Do not attach the speed limit label in a position where the label hides the warning lamp or on the steering wheel. It may interfere with the normal operation of the airbag and lead to a critical failure.

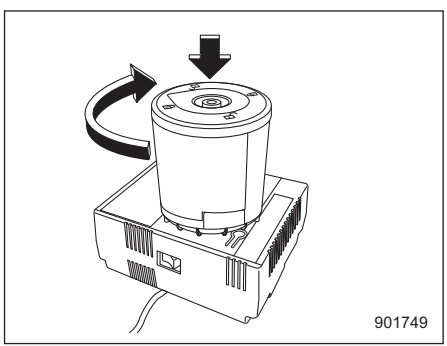

3. Attach the sealant bottle to the air compressor as shown in the figure and then turn the bottle clockwise 90 degrees to secure it.

– CONTINUED –

⚠ CAUTION

- **Make sure that the air compressor switch is OFF.**
- **The sealant may leak if the fitting is not tight enough.**

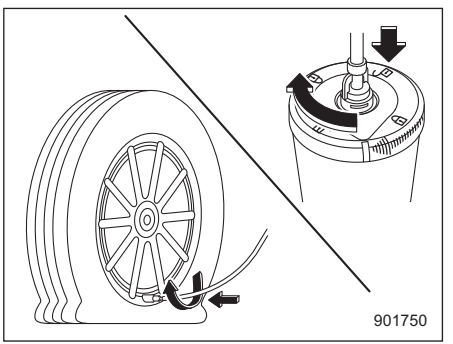

4. Insert the hose into the insertion point at the bottom exterior of the sealant bottle, and then turn the hose clockwise 90 degrees to secure it. Next, securely attach the other end of the hose to the tire valve.

⚠ CAUTION

The sealant may leak if the fitting is not tight enough.

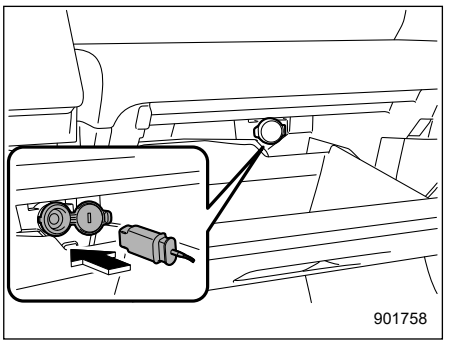

5. Connect the power plug of the air compressor into the accessory power outlet.

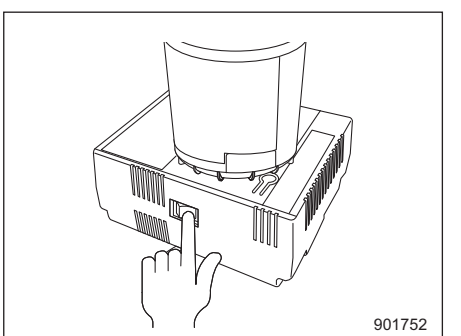

Compressor switch

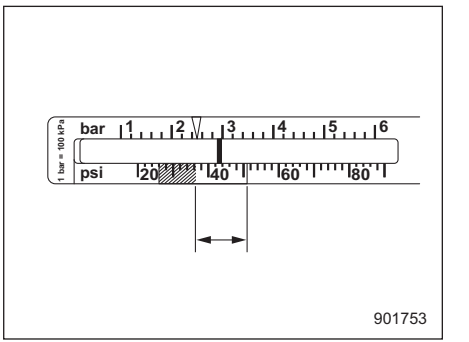

Air gauge

Apply the parking brake and turn on the ignition switch to the “ACC” position. Turn the air compressor switch on and adjust the air pressure to the appropriate level (green zone of the air gauge).

⚠ CAUTION

- **Do not run the air compressor for more than 10 minutes as it can get hot. Be careful not to get burned.**
- **If tire pressure doesn't reach the green zone for 10 minutes, this kit will be unable to seal the tire. Please contact your SUBARU dealer for help.**

NOTE

• After the compressor starts to operate, the air pressure will temporarily rise to 45 psi (300 kPa, 3.0 kgf/cm^2) or higher. After about 30 seconds when all of the sealant is inside the tire, the air pressure will lower, representing the air pressure in the tire.

• In extremely low temperatures −22°F to −4°F (−30°C to −20°C), the viscosity of the sealant increases and the sealant will flow more slowly. In such temperatures, bring the sealant into the vehicle to warm it up before use.

• When mending the tire, if the air pressure gauge is hard to read, turn the compressor switch off once to get an accurate reading.

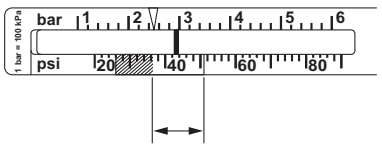

901753

6. Turn the air compressor power switch off when the air pressure reaches the green zone of the air gauge.

Remove the power plug from the accessory power socket.

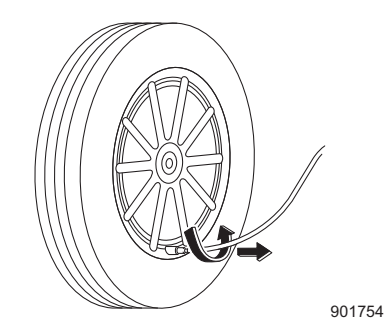
901754

Remove the hose after filling the tire with air and fasten the valve cap.

⚠ CAUTION

The sealant may stain clothing.

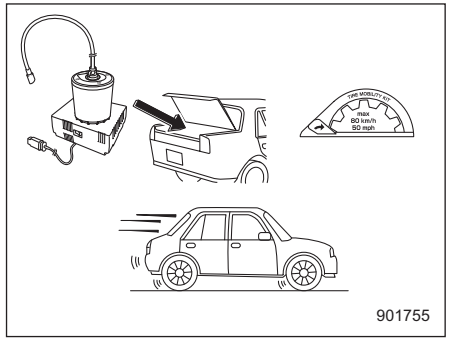

901755

7. Stow the kit back in the vehicle and drive your vehicle immediately for 15 minutes or 6 miles (10 km).

⚠ WARNING

- **Drive carefully. Do not exceed 50 mph (80 km/h). Driving faster than that can result in the vehicle shaking.**
- **Do not use tire chains on a sealed tire.**
- **Do not tow a trailer.**

– CONTINUED –

- **If heavy vibrations, unsteady steering behavior or noises occur while driving, reduce your speed and drive with caution to a location where it is safe for you to stop the vehicle. Recheck the tire and its pressure. If the tire pressure is in the red zone of the air gauge or if there are any cracks, bumps or similar tire damage visible, temporary repairs cannot be performed with the repair kit. We recommend that you consult with your SUBARU dealer or road service provider.**

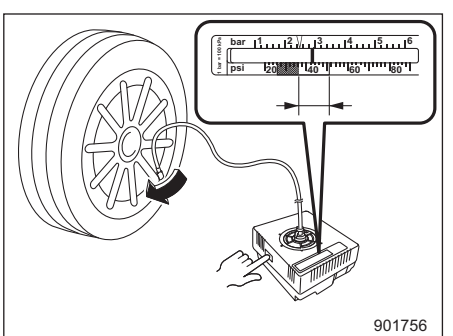

8. After driving either for 15 minutes or a distance of 6 miles (10 km), whichever occurs first, stop the vehicle in a safe place and check the tire pressure again (refer to step 5). When checking the tire pressure, turn the hose and sealant bottle counter-clockwise to disconnect them from the air compressor. Then attach the hose directly to the air compressor.

If necessary, fill the tire with air to the appropriate air pressure again and drive carefully to the nearest SUBARU dealer for tire, valve stem and sealant bottle replacement.

NOTE

• Connect the air compressor only to the tire valve.

• When checking the tire pressure by connecting the hose to the air compressor, you can decrease the tire pressure by pressing the air release button.

⚠ CAUTION

- **If the air pressure is in red zone of the air gauge, the kit did not successfully seal the puncture. In this case, please stop driving and contact your SUBARU dealer for help.**

- **Do not drive your vehicle with the sealed tire for more than 620 miles (1,000 km). Failure to replace the valve stem may result in air leakage at the valve stem.**

Before the tire is removed from the rim, inform your SUBARU dealer or other tire dealer that the tire contains sealant.

⚠ CAUTION

The sealant bottle, speed limit label and Tire Mobility Kit label need to be replaced after using the flat tire repair kit.

NOTE

New sealant and replacement parts can be purchased from your authorized repair shop or SUBARU dealer, and they should also be installed into the kit by a specialist. Empty sealant bottles and replacement parts must be returned to your SUBARU dealer or disposed of in compliance with local waste disposal regulations.

▼ **Technical data of air compressor**

Line voltage	DC 12 V
Operating voltage	DC 10 – 15 V
Amperage	Max. 10 A

■ Tire Pressure Monitoring System (TPMS) (If Equipped)

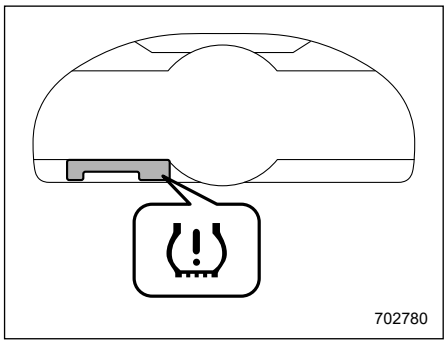

Low tire pressure warning light

The tire pressure monitoring system provides the driver with the warning message indicated by sending a signal from a sensor that is installed in each wheel when tire pressure is severely low.

The tire pressure monitoring system will activate only when the vehicle is driven. Also, this system may not react immediately to a sudden drop in tire pressure (for example, a blow-out caused by running over a sharp object).

⚠ WARNING

- **If the low tire pressure warning light illuminates while driving, never brake suddenly. Instead, perform the following procedure. Otherwise an accident involving serious vehicle damage and serious personal injury could occur.**

  (1) Keep driving straight ahead while gradually reducing speed.

  (2) Slowly pull off the road to a safe place.

  (3) Check the pressure for all four tires and adjust the pressure to the COLD tire pressure shown on the vehicle placard on the center pillar on the driver's side.

  If this light still illuminates while driving after adjusting the tire pressure, a tire may have significant damage and a fast leak that causes the tire to lose air rapidly. If you have a flat tire, refer to "Flat Tires" ☞P311.

– CONTINUED –

- **When a replacement tire is mounted or a wheel rim is replaced without the original pressure sensor/transmitter being transferred, the low tire pressure warning light will illuminate steadily after blinking for approximately one minute. This indicates the TPMS is unable to monitor all four road wheels. Contact your SUBARU dealer as soon as possible for tire and sensor replacement and/or system resetting.**
- **When a tire is repaired with liquid sealant, the tire pressure warning valve and transmitter may not operate properly. If a liquid sealant is used, contact your nearest SUBARU dealer or other qualified service shop as soon as possible. Make sure to replace the tire pressure warning valve and transmitter when replacing the tire. You may reuse the wheel if there is no damage to it and if the sealant residue is properly cleaned off.**

If the light illuminates steadily after blinking for approximately one minute, promptly contact a SUBARU dealer to have the system inspected.

■ TPMS Screen (If Equipped)

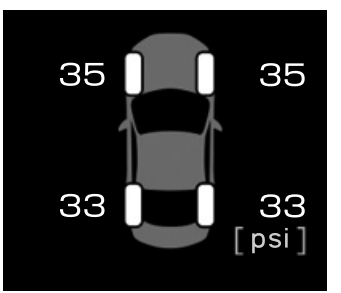

702781

This screen displays each tire pressure. Refer to "Combination Meter Display (Color TFT)" ☞P155.

9-4. Jump Starting

■ Battery Precautions

⚠ WARNING

- **Battery fluid is SULFURIC ACID. Do not let it come in contact with the eyes, skin, clothing or the vehicle.**

  If battery fluid gets on you, thoroughly flush the exposed area with water immediately. Get medical help if the fluid has entered your eyes.

  If battery fluid is accidentally swallowed, immediately drink a large amount of milk or water, and obtain immediate medical help.

  Keep everyone including children away from the battery.
- **The gas generated by a battery explodes if a flame or spark is brought near it. Do not smoke or light a match while jump starting.**
- **Never attempt jump starting if the discharged battery is frozen. It could cause the battery to burst or explode.**

- **Whenever working on or around a battery, always wear suitable eye protectors, and remove metal objects such as rings, bands or other metal jewelry.**
- **Be sure the jumper cables and clamps on them do not have loose or missing insulation.**
- **Do not jump start unless cables in suitable condition are available.**
- **A running engine can be dangerous. Keep your fingers, hands, clothing, hair and tools away from the cooling fan, belts and any other moving engine parts. Removing rings, watches and ties is advisable.**
- **Jump starting is dangerous if it is done incorrectly. If you are unsure about the proper procedure for jump starting, consult a competent mechanic.**

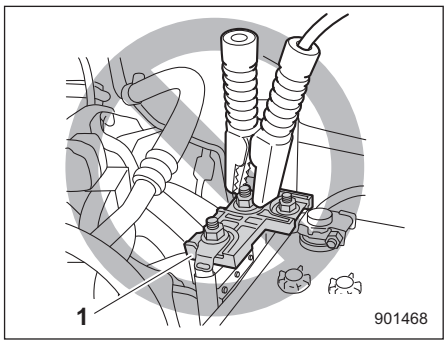

1) Fuse

⚠ WARNING

Never connect the jumper cables to a fuse near the terminal of the vehicle battery. Doing so may ignite gases generated by the battery and result in an explosion, which could damage the electronic devices and the engine.

⚠ CAUTION

The battery used for boosting must be 12 V. Do not jump start unless you are sure that the booster battery is correct.

When your vehicle does not start due to a run down (discharged) battery, the vehicle may be jump started by connecting your battery to another battery (called the booster battery) with jumper cables.

■ How to Jump Start

1. Make sure the booster battery is 12 volts and the negative terminal is grounded.
2. If the booster battery is in another vehicle, do not let the two vehicles touch.
3. Turn off all unnecessary lights and accessories.
4. Connect the jumper cables exactly in the sequence illustrated.

– CONTINUED –

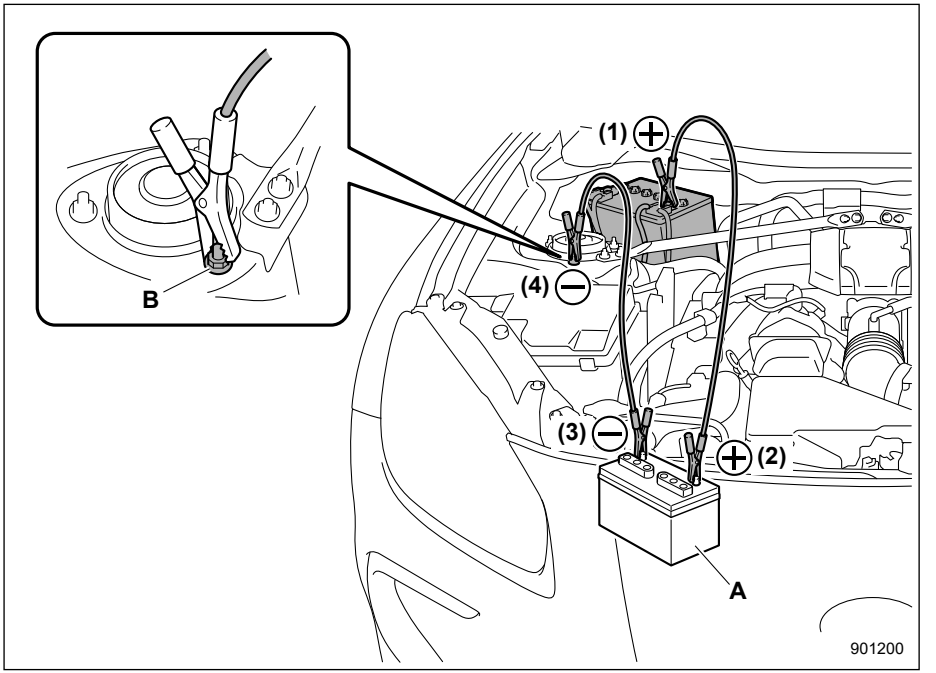

A) Booster battery
B) Strut mounting nut

1) Connect one jumper cable to the positive (+) terminal on the discharged battery.
2) Connect the other end of the jumper cable to the positive (+) terminal of the booster battery.
3) Connect one end of the other cable to the negative (−) terminal of the booster battery.
4) Connect the other end of the cable to the strut mounting nut.

Make sure that the cables are not near any moving parts and that the cable clamps are not in contact with any other metal.

5. Start the engine of the vehicle with the booster battery and run it at moderate speed. Then start the engine of the vehicle that has the discharged battery.

6. When finished, carefully disconnect the cables in exactly the reverse order.

9-5. Engine Overheating

⚠ WARNING

Never remove the radiator cap until the engine has been shut off and has fully cooled down. When the engine is hot, the coolant is under pressure. Removing the cap while the engine is still hot could release a spray of boiling hot coolant, which could burn you very seriously.

⚠ CAUTION

If the engine overheats, the engine speed or the vehicle speed may be reduced. Stop the vehicle in a safe place immediately.

■ If Steam Is Coming from the Engine Compartment

Turn off the engine and get everyone away from the vehicle until it cools down.

■ If No Steam Is Coming from the Engine Compartment

1. Keep the engine running at idling speed.
2. Open the hood to ventilate the engine compartment. Refer to "Engine Hood" ☞P349.

Confirm that the cooling fan is turning. If the fan is not turning, immediately turn off the engine and contact your authorized dealer for repair.

3. After the engine coolant temperature has dropped, turn off the engine.

If the temperature gauge stays in the overheated zone, turn off the engine.

4. After the engine has fully cooled down, check the coolant level in the reserve tank.

If the coolant level is below the “LOW” mark, add coolant up to the “FULL” mark.

NOTE

For details about how to check the coolant level or how to add coolant, refer to "Engine Coolant" ☞P355.

5. If there is no coolant in the reserve tank, add coolant to the reserve tank. Then remove the radiator cap and fill the radiator with coolant.

If you remove the radiator cap from a hot radiator, first wrap a thick cloth around the radiator cap, then turn the cap counterclockwise slowly without pressing down until it stops. Release the pressure from the radiator. After the pressure has been fully released, remove the cap by pressing down and turning it.

9-6. Towing

⚠ WARNING

Never tow vehicles with the front wheels raised off the ground while the rear wheels are on the ground, or with the rear wheels raised off the ground while the front wheels are on the ground.

This will cause the vehicle to damage or cause an accident.

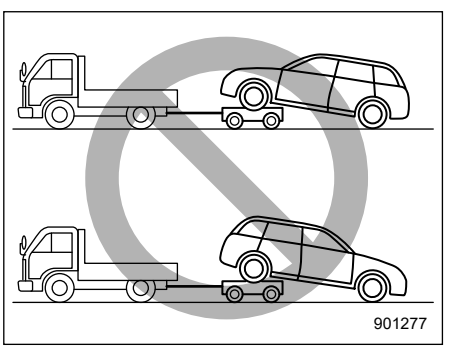

If towing is necessary, it is best done by your SUBARU dealer or a commercial towing service.

■ Towing Hook and Tie-Down Hooks/Holes

The towing hooks should be used only in an emergency.

SUBARU recommends towing be done by your SUBARU dealer or a commercial towing service.

⚠ CAUTION

- **Use only the specified towing hook and tie-down hooks/holes. Never use suspension parts or other parts of the body for towing or tie-down purposes.**
- **Never use the tie-down hole closest to the muffler under the vehicle for towing purposes.**

Front towing hook:

1. Take out the screwdriver, towing hook and wheel nut wrench from the under-floor storage compartment.

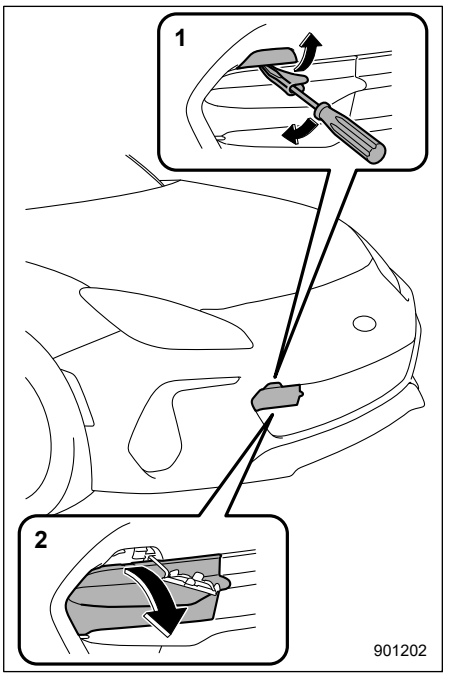

1) Upper cover
2) Lower cover

2. Insert a screwdriver, with its tip covered with tape or a cloth to prevent damage to the bumper, into the cutout of the cover and pry up to separate the upper

cover. Then, pull the lower cover to separate it.

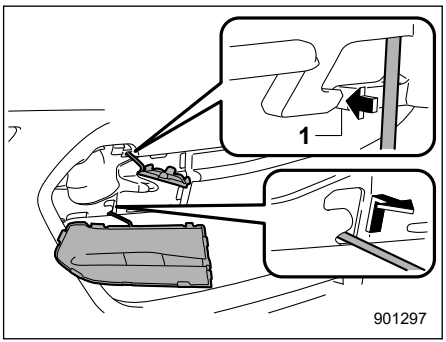

1) Slit

3. Remove the covers from the bumper.

When removing the upper side cover, align the hook portion of the cover with the slit and push it through the slit to remove the cover.

⚠ CAUTION

Do not apply excessive force when removing the covers. Otherwise, they may be deformed or damaged.

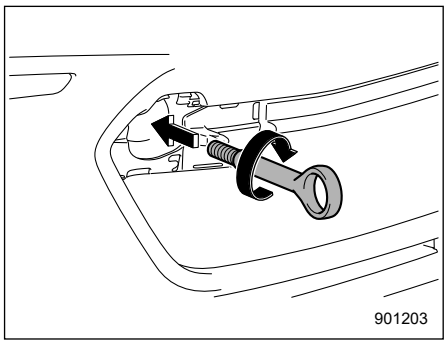

4. Screw the towing hook into the threaded hole until the threads can no longer be seen.

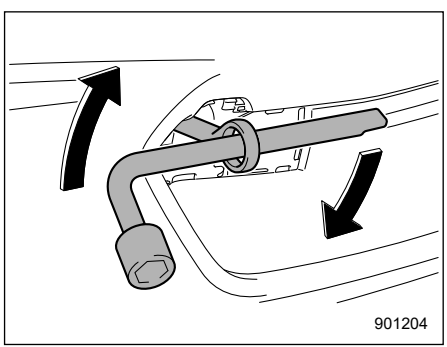

5. Tighten the towing hook securely using the wheel nut wrench.

After towing, remove the towing hook from the vehicle and stow it in the under-floor storage compartment.

Fit the towing hook cover on the bumper.

⚠ WARNING

- **Do not use the towing hook for purposes other than towing your vehicle.**
- **Be sure to remove the towing hook after towing. Leaving the towing hook mounted on the vehicle could interfere with proper operation of the SRS airbag system in a frontal collision.**

⚠ CAUTION

To prevent deformation to the bumper and the towing hook, do not apply an excessive load to the towing hook.

Rear towing hook:

1. Take out the screwdriver, towing hook, wheel nut wrench from the under-floor storage compartment.

– CONTINUED –

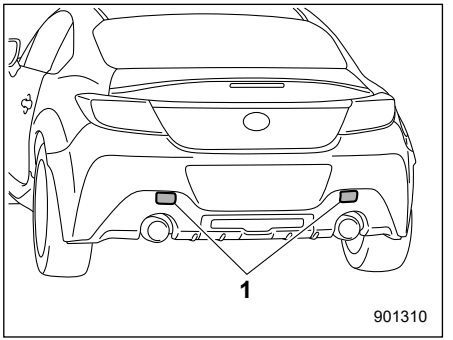

1) Towing hook covers

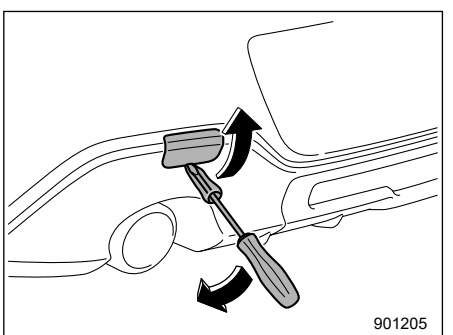

2. Insert a screwdriver, with its tip covered with tape or a cloth to prevent damage to the bumper, into the cutout of the cover on the rear bumper, pry off the cover, and you will find a threaded hole for attaching the towing hook.

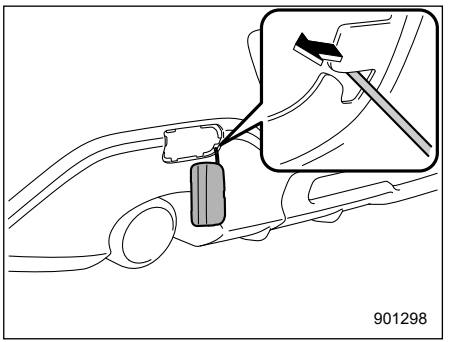

3. Remove the covers from the bumper.

⚠ CAUTION

Do not apply excessive force when removing the covers. Otherwise, they may be deformed or damaged.

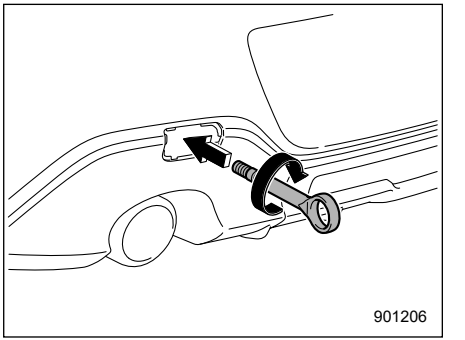

4. Screw the towing hook into the threaded hole until its thread can no longer be seen.

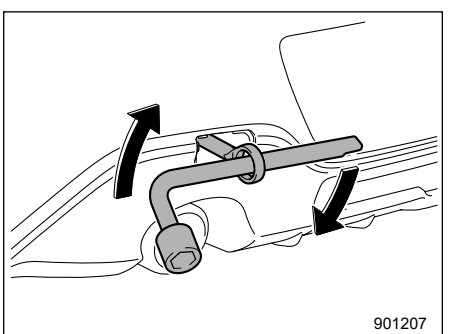

5.Tighten the towing hook securely using the wheel nut wrench.

After towing, remove the towing hook from the vehicle and stow it in the under-floor storage compartment.

Fit the towing hook cover on the bumper.

⚠ WARNING

- **Do not use the towing hook for purposes other than towing your vehicle.**
- **Be sure to remove the towing hook after towing. Leaving the towing hook mounted on the vehicle could interfere with proper operation of the fuel pump shut off function when the vehicle is struck from behind.**

⚠ CAUTION

- **To prevent deformation to the bumper and the towing hook, do not apply an excessive load to the towing hook.**

- **For models equipped with the BSD (Blind Spot Detection) and RCTA (Rear Cross Traffic Alert) driving support systems, when towing another vehicle, touch "BSD/RCTA" to deactivate the system. The system may not operate properly due to the blocked radar waves. For details about how to turn on/off the BSD/RCTA, refer to "Car settings" ☞P169**

Front tie-down hooks:

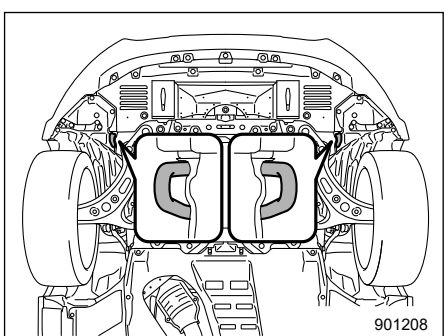

The front tie-down hooks are located between each of the front tires and the front bumper.

Front Tie-down Hooks are for tying down the vehicle. They are not for towing.

Rear tie-down holes:

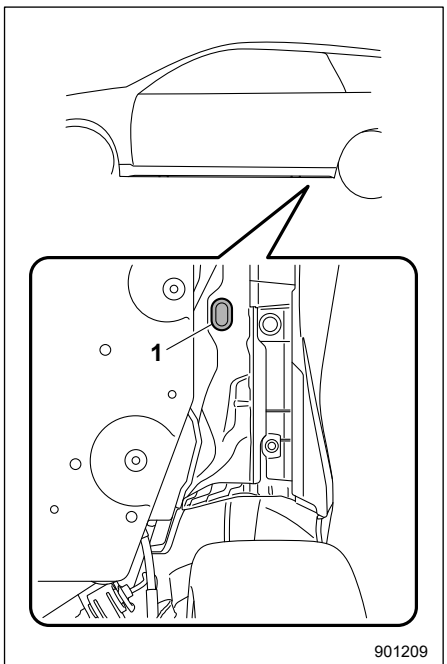

1) Rear tie-down hole

The rear tie-down holes are located near each of the jack-up reinforcements.

There is a plug in each rear tie-down hole. To use the rear tie-down holes, remove the plugs. After using the rear tie-down

– CONTINUED –

holes, return the plugs to their original places.

⚠ WARNING

Use the rear tie-down holes only for downward anchoring. If they are used to anchor the vehicle in any other direction, cables may slip out of the holes, possibly causing a dangerous situation.

■ Using a Flat-Bed Truck

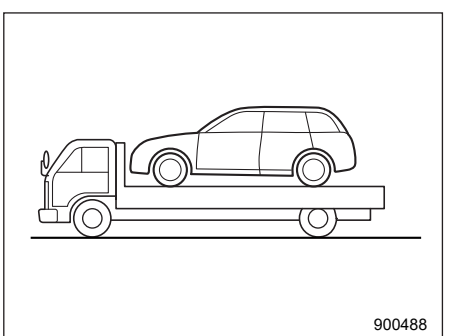

This is the best way to transport your vehicle. Use the following procedures to ensure safe transportation.

1. Shift the select lever into the “P” position for AT models. Shift the shift lever into the 1st position for MT models.
2. Apply the parking brake firmly.
3. Secure the vehicle onto the carrier properly with safety chains. Each safety chain should be equally tightened and care must be taken not to pull the chains so tightly that the suspension bottoms out.

⚠ CAUTION

Transport by flat-bed truck may cause the headlights to become misaligned. In such a case, have the headlight alignment checked by a SUBARU dealer after transporting the vehicle by flat-bed truck.

■ Towing with All Wheels on the Ground

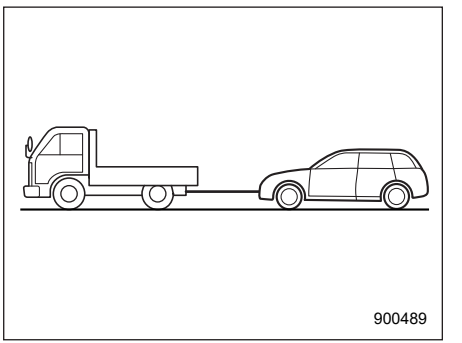

⚠ WARNING

- **Never turn the ignition switch to the “OFF” position while the vehicle is being towed because the steering wheel and the direction of the wheels will be locked.**
- **Remember that the brake booster and power steering do not function when the engine is not running. Because the engine is turned off, it will take greater effort to operate the brake pedal and steering wheel.**

⚠ CAUTION

- **If transmission failure occurs, transport your vehicle on a flat-bed truck.**
- **Sometime damaged vehicles cannot be towed because of their damaged condition. In that case, use a flat-bed truck for transportation.**
- **The traveling speed must be limited to less than 20 mph (32 km/h) and the traveling distance to less than 19 miles (30 km). For greater speeds and distances, transport your vehicle on a flat-bed truck.**
- **Use a flat-bed truck if there are long distance downgrades or steep slopes. However, do not apply the brake pedal for a long time because the engine braking will not work while towing. Doing so could overheat the brake.**
- **Drive carefully and do not make an impact on the towing rope by suddenly starting.**
- **Use a specific towing rope for towing. If wire ropes and metal chains are needed to be used for towing, wrap the contact portion of the bumper with cloth to protect it from damage.**

1. Release the parking brake and put the transmission in neutral.
2. The ignition switch should be in the “ON” position while the vehicle is being towed.
3. Take up slack in the towline slowly to prevent damage to the vehicle.

9-7. Access Key Fob – If Access Key Fob Does Not Operate Properly

⚠ CAUTION

Keep metallic objects, magnetic sources and signal transmitters away from the area between the access key fob and the push-button ignition switch. They may interfere with the communication between the access key fob and the push-button ignition switch.

The following functions may be inoperable because of strong radio signals in the surrounding area or a low battery condition of the access key fob.

- Locking/unlocking doors including trunk
- Switching power status
- Starting engine

In such cases, perform the following procedure. When the battery of the access key fob is discharged, replace it with a new one. Refer to "Replacing Battery of Access Key Fob" ☞P385.

– CONTINUED –

■ Locking and Unlocking

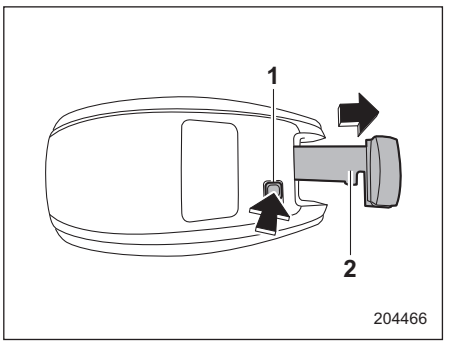

1) Release button
2) Emergency key

While pressing the release button of the access key fob, take out the emergency key.

Lock or unlock the driver's door with the emergency key in the procedure described in "Locking and Unlocking from the Outside" ☞P113.

NOTE

After locking or unlocking, be sure to attach the emergency key back to the access key fob.

■ Switching Power Status

1. Apply the parking brake.
2. Shift the shift lever into neutral (MT models) or the select lever into the "P" position (AT models).
3. Depress the clutch pedal (MT models) or brake pedal (AT models).

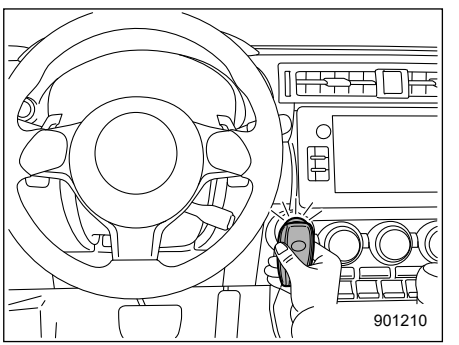

4. Hold the access key fob with the buttons facing you, and touch the push-button ignition switch with it.

When the communication between the access key fob and the vehicle is completed, a chime (ding) will sound. At the same time, the status of the push-button ignition switch changes to either of the following.

- When the keyless access with push-button start system is deactivated: "ACC"
- Under other conditions: "ON"

5. When the keyless access with push-button start system is deactivated, press the push-button ignition switch with the clutch pedal (MT models) or brake pedal (AT models) released. The status of the push-button ignition switch then changes to "ON".

NOTE

If the power does not switch even though the above procedure was followed precisely, contact your SUBARU dealer.

■ Starting Engine

1. Apply the parking brake.
2. Shift the shift lever into neutral (MT models) or the select lever into the "P" position (AT models).
3. Depress the brake pedal (all models).
4. Depress the clutch pedal (MT models).

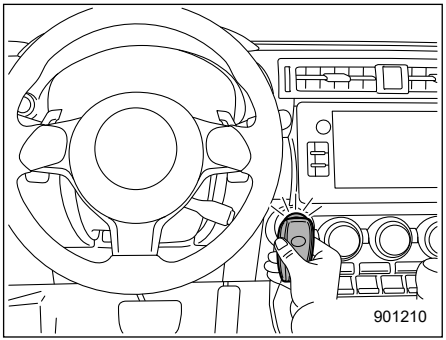

5. Hold the access key fob with the buttons facing you, and touch the push-button ignition switch with it.

When the communication between the access key fob and the vehicle is completed, a chime (ding) will sound. At the same time, the push-button ignition switch turns to the “ACC” or “ON” position.

6. After the push-button ignition switch turns to the “ACC” or “ON” position, while depressing the brake pedal (all models) and the clutch pedal (MT models), press the push-button ignition switch.

NOTE

If the engine does not start even though the above procedure was followed precisely, contact your SUBARU dealer.

9-8. Malfunctions of the Center Information Display

If the following screens are displayed, temporary errors or malfunctions may occur in the center information display.

If they are only temporary errors, the following procedure may help to eliminate them.

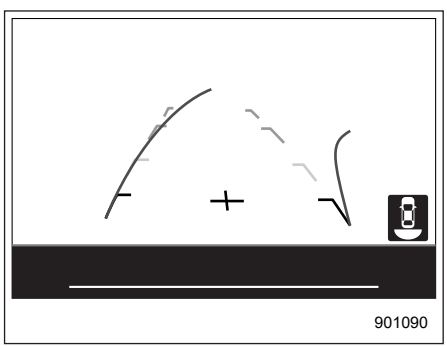

Shutting down the screen

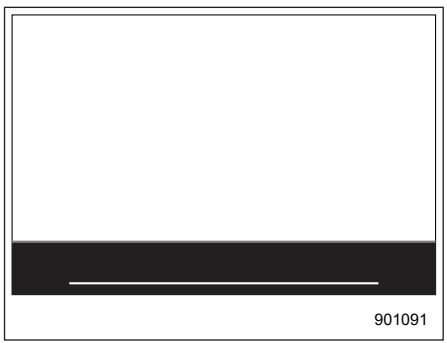

Freezing the screen

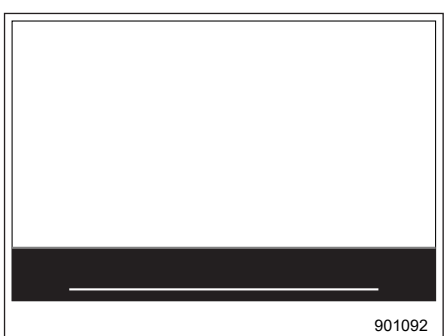

Blacking out the screen

– CONTINUED –

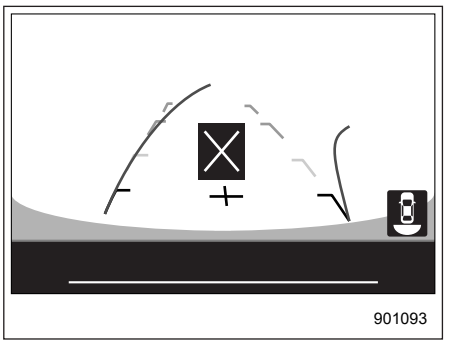

Error A

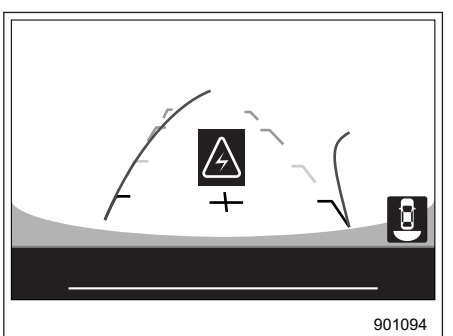

Error B

1. Park the vehicle in a safe place.
2. Turn the ignition switch once to the “OFF” position, then start the engine.

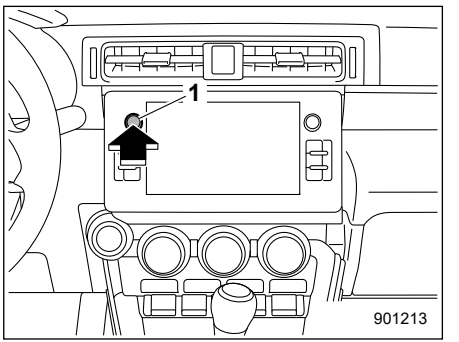

1) Volume button

3. If the center information display cannot be recovered even though the engine has been restarted, press and hold the volume button for more than 10 seconds. The center information display will start up again.
4. If the center information display is not recovered by restarting it, contact your SUBARU dealer.

9-9. If the Power Window Does Not Close

Certain environments or driving conditions may cause the anti-entrapment function to activate, preventing the window from closing.

After the anti-entrapment function is triggered, the window cannot be closed for several seconds.

If the window reverses automatically and cannot be closed, perform the following steps:

1. Pull up and hold the power window switch of the affected window. Continue holding the switch until the an-ti-entrapment function activates and then stops.
2. Release the switch and wait approximately 5 seconds.
3. Pull up and hold the power window switch of the affected window again. Continue holding the switch until the an-ti-entrapment function activates and then stops.
4. Release the switch and wait approximately 5 seconds.
5. Pull up and hold the power window switch of the affected window again. This time, the anti-entrapment function will not activate, and the window will close.

If the issue is not resolved after performing the above steps, contact a SUBARU dealer.

9-10. If Your Vehicle Is Involved in an Accident

■ To Restart the Engine When Involved in an Accident

⚠ CAUTION

If your vehicle is involved in an accident, be sure to inspect the ground under the vehicle before restarting the engine. If you find that fuel has leaked on the ground, do not try to restart the engine. The fuel system has been damaged and is in need of repair. Immediately contact the nearest automotive service facility. We recommend that you consult your SUBARU dealer.

Your vehicle has a fuel pump shut off system. When the vehicle sustains an impact in an accident, etc., the fuel pump shut off system stops supplying the fuel in order to minimize fuel leakage.

However, depending on the impact conditions at the time of collision, the fuel pump shut-off system may not operate.

Perform the following procedures to restart the engine after the system is activated.

1. Turn the push-button ignition switch to the “ACC” or “OFF” position.
2. Restart the engine.

10-1.Exterior Care 336
Washing.....336
Waxing and Polishing 337
Cleaning Alloy Wheels 337
Alloy Wheels (Vehicles with Matte Painted Wheels) 338
10-2.Corrosion Protection 338
Most Common Causes of Corrosion 338
To Help Prevent Corrosion 339
10-3.Cleaning the Interior 339
Seat Fabric Material..... 339
Leather Seat Materials..... 340
Synthetic Leather Upholstery..... 340
Instrument Panel, Console Panel, Switches, Combination Meter, and Other Plastic Surface 340
Center Information Display..... 340

10-1. Exterior Care

■ Washing

⚠ CAUTION

- **When using detergent to wash your vehicle, use plenty of water and thoroughly rinse away the detergent so that none remains on the brake calipers. If the brakes (brake calipers) are wet, the braking distance will be longer. To dry the brakes (brake calipers), drive the vehicle at a safe speed while lightly pressing the brake pedal to warm up the brakes (brake calipers).**
- **Do not wash the engine compartment and areas adjacent to it. If water enters the engine air intake or electrical parts, it will cause engine trouble or a malfunction of the power steering.**
- **When washing inner fenders, underbody, bumpers and protruding objects such as exhaust pipes and exhaust finishers, be careful to prevent injuries from contacting sharp ends.**
- **If the climate control system is operating when you wash the vehicle, do not set the air inlet selection of the climate control to outside air circulation mode. There is a risk that water may enter the vehicle through the air inlets.**
- **Do not use any organic solvents when washing the surface of the bulb assembly cover. However, if a detergent with organic solvents is used to wash the cover surface, completely rinse off the detergent with water. Otherwise, the cover surface may be damaged.**

NOTE

When having your vehicle washed in an automatic car wash, make sure beforehand that the car wash is of suitable type.

The best way to preserve your vehicle's beauty is frequent washing. Wash the vehicle at least once a month to avoid contamination by road grime.

Wash dirt off with a wet sponge and plenty of lukewarm or cold water. Do not wash the vehicle with hot water and in direct sunlight.

Salt, chemicals, insects, tar, soot, tree sap, and bird droppings should be washed off by using a light detergent, as required. If you use a light detergent, make certain that it is a neutral detergent. Do not use strong soap or chemical detergents. All cleaning agents should be promptly flushed from the surface and not allowed to dry there. Rinse the vehicle thoroughly with plenty of lukewarm water. Wipe the remaining water off with a chamois or soft cloth. Wear rubber gloves and use a hand brush when washing down underbody, inner fenders and suspension to effectively remove mud and dirt off.

▼ Washing the underbody

Chemicals, salts and gravel used for deicing road surfaces are extremely corrosive, accelerating the corrosion of underbody components, such as the exhaust system, fuel and brake lines, brake cables, floor pan and fenders, and suspension.

Thoroughly flush the underbody and inside of the fenders with lukewarm or cold water at frequent intervals to reduce the harmful effects of such agents.

Mud and sand adhering to the underbody components may accelerate their corrosion.

After driving off-road or on muddy or sandy roads, wash the mud and sand off the underbody.

Carefully flush the suspension and axle parts, as they are particularly prone to mud and sand buildup. Do not use a sharp-edged tool to remove caked mud.

⚠ CAUTION

- **Be careful not to damage brake hoses, sensor harnesses, and other parts when washing suspension components.**
- **When cleaning the lower part of the car body, keep a sufficient distance between the car wash nozzle and the car body, and do not wash the same area continuously. Doing so may damage components of the engine, electrical system, rubber trim, or other parts.**

▼ Using a pressure washer

- Keep a good distance of 12 in (30 cm) or more between the washer nozzle and the vehicle.
- Do not wash the same area continuously.
- If you are unable to remove a stain easily using the pressure washer, wash the area by hand. Note that some pressure washers may spray hot or high pressure water that will damage the vehicle body paint, damage or deform moldings or other resin parts, or cause water to leak into the vehicle.

■ Waxing and Polishing

Always wash and dry the vehicle before waxing and polishing.

Use a good quality polish and wax and apply them according to the manufacturer's instructions. Wax or polish when the painted surface is cool.

Be sure to polish and wax the chrome trim, as well as the painted surfaces. Loss of wax on a painted surface leads to loss of the original luster and also quickens the deterioration of the surface. It is recommended that a coat of wax be applied at least once a month, or whenever the surface no longer repels water.

If the appearance of the paint has diminished to the point where the luster or tone cannot be restored, lightly polish the surface with a fine-grained compound. Never polish just the affected area, but include the surrounding area as well. Always polish in only one direction. A No. 2000 grain compound is recommended. Never use a coarse-grained compound. Coarser grained compounds have a smaller grain-size number and could damage the paint. After polishing with a compound, coat with wax to restore the original luster. Frequent polishing with a compound or an incorrect polishing technique will result in removing the paint layer and exposing the undercoat. When in doubt, it is always best to contact your SUBARU dealer or an auto paint specialist.

⚠ CAUTION

Do not use any agents with organic solvents on the surface of the bulb assembly cover. However, if a polish or wax with organic solvents is applied to the cover surface, completely wipe off the polish or wax. Otherwise, the cover surface may be damaged.

NOTE

Be careful not to block the windshield washer nozzles with wax when waxing the vehicle.

■ Cleaning Alloy Wheels

- Promptly wipe the alloy wheels clean of any kind of grime or agent. If dirt is left on too long, it may be difficult to clean off.

– CONTINUED –

- Do not use soap containing grit to clean the wheels. Be sure to use a neutral cleaning agent, and later rinse thoroughly with water. Do not clean the wheels with a stiff brush or expose them to a high-speed washing device.
- Clean the vehicle (including the alloy wheels) with water as soon as possible when it has been splashed with sea water, exposed to sea breezes, or driven on roads treated with salt or other agents.
- Do not use detergent on the wheels when they are hot, such as after driving or parking in hot weather.

■ Alloy Wheels (Vehicles with Matte Painted Wheels)

⚠ CAUTION

Be sure to observe the following precautions as matte painted wheels can be damaged.

- **Do not scrub or polish the wheels using a brush or dry cloth.**
- **Do not use any wheel coatings or abrasive detergents.**

As matte painted wheels require different cleaning methods than conventional alloy wheels, be sure to observe the following.

- Remove dirt using water. If the wheels are excessively dirty, use a sponge or soft cloth dampened with a diluted neutral detergent to remove the dirt.

10-2. Corrosion Protection

Your SUBARU has been designed and built to resist corrosion. Special materials and protective finishes have been used on most parts of the vehicle to help maintain fine appearance, strength, and reliable operation.

■ Most Common Causes of Corrosion

The most common causes of corrosion are:

- The accumulation of moisture retaining dirt and debris in body panel sections, cavities, and other areas.
- Damage to paint and other protective coatings caused by gravel and stone chips or minor accidents.

Corrosion is accelerated on the vehicle when:

- It is exposed to road salt or dust control chemicals, or used in coastal areas where there is more salt in the air, or in areas where there is considerable industrial pollution.
- It is driven in areas of high humidity, especially when temperatures range just above freezing.
- Dampness in certain parts of the vehicle remains for a long time, even

though other parts of the vehicle may be dry.

- High temperatures will cause corrosion to parts of the vehicle which cannot dry quickly due to lack of proper ventilation.

■ To Help Prevent Corrosion

Wash the vehicle regularly to prevent corrosion of the body and suspension components. Also, wash the vehicle promptly after driving on any of the following surfaces.

- Roads that have been salted to prevent them from freezing in winter
- Mud, sand, or gravel
- Coastal roads

After the winter has ended, it is recommended that the underbody be given a very thorough washing.

Before the beginning of winter, check the condition of underbody components, such as the exhaust system, fuel and brake lines, brake cables, suspension, steering system, floor pan, and fenders. If any of them are found to be rusted, they should be given an appropriate rust prevention treatment (except the exhaust system) or should be replaced. Contact your SUBARU dealer to perform this kind of maintenance and treatment if you need assistance.

Repair chips and scratches in the paint as soon as you find them.

Check the interior of the vehicle for water and dirt accumulation under the floor mats because that could cause corrosion. Occasionally check under the mats to make sure the area is dry.

Keep your garage dry. Do not park your vehicle in a damp, poorly ventilated garage. In such a garage, corrosion can be caused by dampness. If you wash the vehicle in the garage or put the vehicle into the garage when wet or covered with snow, that can cause dampness.

If your vehicle is operated in cold weather and/or in areas where road salts and other corrosive materials are used, the door hinges and locks, trunk lid lock, and hood latch should be inspected and lubricated periodically.

10-3. Cleaning the Interior

Use a soft, damp cloth to clean the climate control panel, audio equipment, instrument panel, center console, combination meter panel, and switches. (Do not use organic solvents.)

■ Seat Fabric Material

Remove loose dirt, dust or debris with a vacuum cleaner. If the dirt is caked on the fabric or hard to remove with a vacuum cleaner, use a soft brush then vacuum it.

Wipe the fabric surface with a tightly wrung cloth and dry the seat fabric thoroughly. If the fabric is still dirty, wipe using a solution of mild soap and lukewarm water then dry thoroughly.

If the stain does not come out, try a commercially available fabric cleaner. Use the cleaner on a hidden place and make sure it does not affect the fabric adversely. Use the cleaner according to its instructions.

⚠ CAUTION

When cleaning the seat, do not use benzine, paint thinner, or any similar materials. Doing so could damage the surface and cause the color to deteriorate.

– CONTINUED –

NOTE

As the color of the meter visor may transfer, do not place anything on top of it.

■ Leather Seat Materials

The leather used by SUBARU is a high quality natural product which will retain its distinctive appearance and feel for many years with proper care.

Allowing dust or road dirt to build up on the surface can cause leather to become brittle and wear prematurely. To maintain its resiliency, leather should be cleaned monthly or whenever it becomes soiled.

Before cleaning leather upholstery, vacuum it to remove dust. Use a soft and lint-free cloth dampened with lukewarm water and mild soap, taking care not to soak the leather or allow water to penetrate the stitched seams. Use a gentle circular motion while cleaning the leather - do not rub or apply extreme pressure. Wipe the leather again with another clean, slightly damp cloth to remove soap residue and dry with a soft cloth.

Minor surface blemishes or difficult dirt spots may be treated with a commercial leather spray. Never use alcohol, cleaning solvents, leather oils, varnishes or polishes on your leather as it will dry out the leather finish.

If your SUBARU is to be parked for a long time in bright sunlight, it is recommended that the seats and headrests be covered, or the windows shaded, to prevent fading or shrinkage.

You will discover that each leather seat section will develop soft folds or wrinkles, which is characteristic of genuine leather.

■ Synthetic Leather Upholstery

The synthetic leather material used on the SUBARU may be cleaned using mild soap or detergent and water, after first vacuuming or brushing away loose dirt. Allow the soap to soak in for a few minutes and wipe off with a clean, damp cloth. Commercial foam-type cleaners suitable for synthetic leather materials may be used when necessary.

⚠ CAUTION

Strong cleaning agents such as solvents, paint thinners, window cleaner or gasoline must never be used on leather or synthetic interior materials. Doing so could damage the surface and cause the color to deteriorate.

■ Instrument Panel, Console Panel, Switches, Combination Meter, and Other Plastic Surface

Use a soft, damp cloth to clean the instrument panel, center console, combination meter panel, and switches.

⚠ CAUTION

- **Do not use organic solvents such as paint thinners or gasoline, or strong cleaning agents that contain those solvents. Doing so could damage the surface and cause the color to deteriorate.**
- **Do not use chemical solvents that contain silicone on the vehicle audio system, electrical components of the air-conditioner or any switches. If silicone adheres to these parts, it may cause damage to electrical components.**

■ Center Information Display

To clean the center information display, wipe it with a silicone cloth or with a soft cloth. If the monitor is extremely dirty, clean it with a soft cloth moistened with neutral detergent then carefully wipe off any remaining detergent.

⚠ CAUTION

- **Do not spray neutral detergent directly onto the monitor. Doing so could damage the monitor's components.**
- **Do not wipe the monitor with a hard cloth. Doing so could scratch the monitor.**
- **Do not use cleaning fluid that contains thinner, fuel, or any other volatile substance. Such cleaning fluid could erase the lettering on the switches at the bottom of the monitor.**

11-1.Maintenance Schedule 345
11-2.Maintenance Precautions.....345
Before Checking or Servicing in the Engine Compartment.....346
When Checking or Servicing in the Engine Compartment.....346
When Checking or Servicing in the Engine Compartment While the Engine Is Running 347
11-3.Maintenance Tips.....347
Removing and Reinstalling Clips.....347
11-4.Engine Hood.....349
11-5.Engine Compartment Overview.....351
11-6.Engine Oil 352
Engine Oil Consumption.....352
Checking the Oil Level.....352
Changing the Oil and Oil Filter.....353
Recommended Grade and Viscosity 353
Synthetic Oil.....354
11-7.Cooling System.....354
Cooling Fan, Hose and Connections.....354
Engine Coolant 355
11-8.Air Cleaner Element.....356
Replacing the Air Cleaner Element.....356
11-9.Spark Plugs 358
Recommended Spark Plugs 358
11-10.Drive Belt 358
11-11.Automatic Transmission Fluid 358
Recommended Grade and Viscosity 358
11-12.Differential Gear Oil 359
Recommended Grade and Viscosity 359
11-13.Manual Transmission Oil 359
Recommended Grade and Viscosity 359
11-14.Brake Fluid 359
Checking the Fluid Level 359
Recommended Brake Fluid 360
11-15.Clutch Fluid (MT models) 360
Checking the Fluid Level 360
Recommended Clutch Fluid 361
11-16.Brake Booster 361
11-17.Brake Pedal 362
11-18.Clutch Pedal (MT models) 362
11-19.Replacement of Brake Pad and Lining.....362
Breaking-in of New Brake Pads and Linings 363
11-20.Parking Brake Stroke.....363
11-21.Tires and Wheels 364
Types of Tires 364
Tire Pressure Monitoring System (TPMS) (If Equipped)..... 364
Tire Inspection 366
Tire Pressures and Wear..... 367
Wheel Balance 369
Wear Indicators..... 369
Rotational Direction of Tires..... 370
Tire Rotation..... 370
Tire Replacement..... 370
Wheel Replacement..... 374
11-22.Alloy Wheels.....375
11-23.Windshield Washer Fluid 375
11-24.Replacement of Wiper Blades.....376
Windshield Wiper Blade Assembly..... 377
Windshield Wiper Blade Rubber 378
11-25.Battery.....379
11-26.Fuses.....380
11-27.Installation of Accessories 381

11-28.Replacing Bulbs.....382
Headlights.....382
Backup Light.....382
Trunk Light.....383
Other Bulbs.....383
Adjusting Headlight Aim.....383
11-29.Replacing Battery..... 384
Replacing Battery of Access Key Fob.....385

11-1. Maintenance Schedule

U.S. models

The scheduled maintenance items required to be serviced at regular intervals are shown in the “Warranty and Maintenance Booklet”. For details, read the separate “Warranty and Maintenance Booklet”.

Canada models

The scheduled maintenance items required to be serviced at regular intervals are shown in the “Warranty and Service Booklet”. For details, read the separate “Warranty and Service Booklet”.

Except for U.S. and Canada models

Some items of your vehicle are required to be serviced at scheduled intervals. For details about your maintenance schedule, read the separate “Warranty and Maintenance Booklet”.

11-2. Maintenance Precautions

When maintenance and service are required, it is recommended that all work be done by an authorized SUBARU dealer.

If you perform maintenance and service by yourself, you should familiarize yourself with the information provided in this section on general maintenance and service for your SUBARU.

Incorrect or incomplete service could cause improper or unsafe vehicle operation. Any problems caused by improper maintenance and service performed by you are not eligible for warranty coverage.

⚠ WARNING

- **Always select a safe area when performing maintenance on your vehicle.**
- **Always be very careful to avoid injury when working on the vehicle. Remember that some of the materials in the vehicle may be hazardous if improperly used or handled, for example, battery acid.**
- **Your vehicle should only be serviced by persons fully competent to do so. Serious personal injury may result to persons not experienced in servicing vehicles.**
- **Always use the proper tools and make certain that they are well maintained.**
- **Never get under the vehicle supported only by a jack. Always use safety stands to support the vehicle.**
- **Never keep the engine running in a poorly ventilated area, such as a garage or other closed areas.**
- **Do not smoke or allow open flames around the fuel or battery. This will cause a fire.**
- **Because the fuel system is under pressure, replacement of the fuel filter should be performed only by your SUBARU dealer.**
- **Wear adequate eye protection to guard against getting oil or fluids in your eyes. If something does get in your eyes, thoroughly wash them out with clean water.**

– CONTINUED –

- Do not tamper with the wiring of the SRS airbag system or seatbelt pretensioner system, or attempt to take its connectors apart, as that may activate the system or it can render it inoperative. NEVER use a circuit tester for these wiring. If your SRS airbag or seatbelt pretensioner needs service, consult your nearest SUBARU dealer.
- Check the inside of the engine compartment to see if there are any cloths and tools left. If they are left inside, they may be a cause of malfunction and fire.

NOTE

SUBARU does not endorse the use of non-SUBARU approved flushing systems and strongly advises against performing these services on a SUBARU vehicle. Non-SUBARU approved flushing systems use chemicals and/or solvents which have not been tested or approved by SUBARU. SUBARU warranties do not cover any part of the vehicle which is damaged by adding or applying chemicals and/or solvents other than those approved or recommended by SUBARU.

■ Before Checking or Servicing in the Engine Compartment

⚠ WARNING

- Always stop the engine and apply the parking brake to prevent the vehicle from moving.
- Always let the engine cool down. Engine parts become very hot when the engine is running and remain hot for some time after the engine is stopped.
- Do not spill engine oil, engine coolant, brake fluid or any other fluid on hot engine components. This may cause a fire.
- When the ignition switch is in the "ON" position, the cooling fan may operate suddenly even when the engine is stopped. If your body or clothes come into contact with a rotating fan, that could result in serious injury. To avoid risk of injury, always turn the push-button ignition switch to the "OFF" position and confirm that the operation indicator on the switch is turned off. Then take the access key fob out from the vehicle.
- Before performing any servicing on a vehicle equipped with a remote engine start system temporarily place that system in the service mode to prevent it from unexpectedly starting the engine.

■ When Checking or Servicing in the Engine Compartment

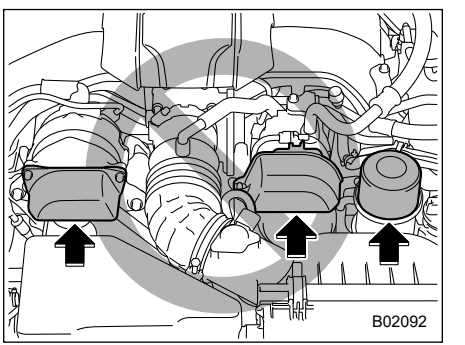

⚠ CAUTION

- **Do not contact the cover while checking the components in the engine compartment. Doing so may cause your hand to slip off the cover and result in an unexpected injury.**
- **Do not touch the oil filter until the engine has cooled down completely. Doing so may result in a burn or other injury. Note that the oil filter becomes very hot when the engine is running and remains hot for some time after the engine has stopped.**

■ When Checking or Servicing in the Engine Compartment While the Engine Is Running

⚠ WARNING

A running engine can be dangerous. Keep your fingers, hands, clothing, hair and tools away from the cooling fan, belts and any other moving engine parts. Removing rings, watches and ties is advisable.

11-3. Maintenance Tips

Some clips and fender linings must be removed before replacing the air cleaner element or specific bulbs.

■ Removing and Reinstalling Clips

▼ Removing clips

There are several types of clips used for your vehicle.

▽ Type A and D clips

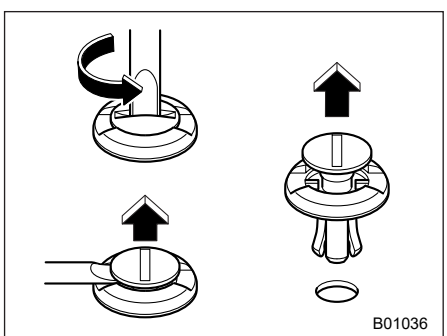

Type A clips

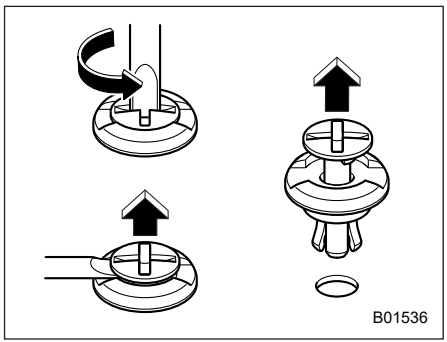

Type D clips

1. Turn the clips counterclockwise using a flat-head screwdriver until the center portion of the clip is raised.
2. Remove the clips with a flat-head screwdriver using leverage.

– CONTINUED –

▽ Type B clips

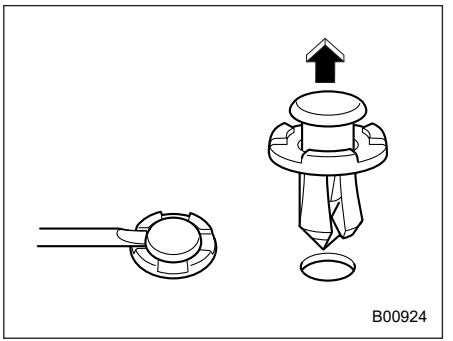

1. Pull out the center portion of the clip using a flat-head screwdriver as shown in the illustration.
2. Pull the protruded center portion to remove the entire body of the clip.

▽ Type C clips

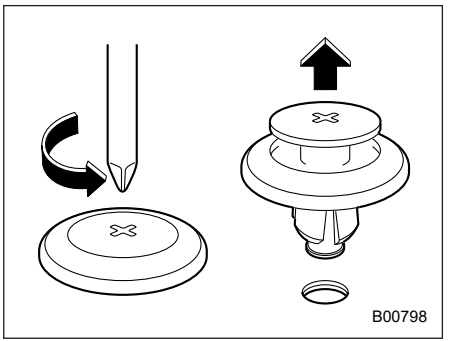

1. Turn the clip counterclockwise using a Phillips screwdriver until the center portion of the clip is raised.
2. Remove the entire clip by pulling it up.

▼ Reinstalling clips

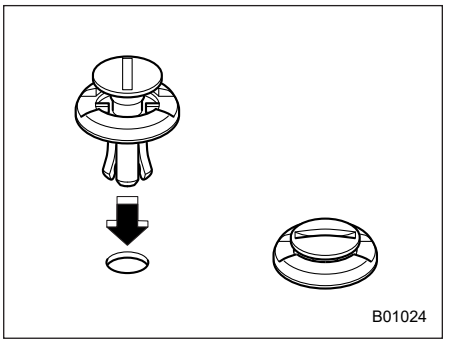

Type A clips

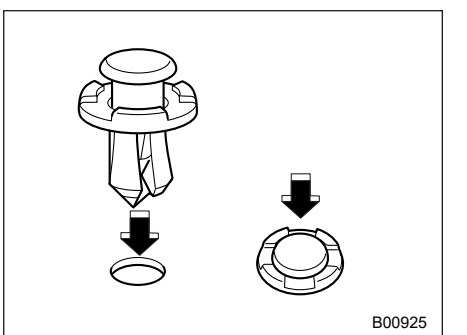

Type B clips

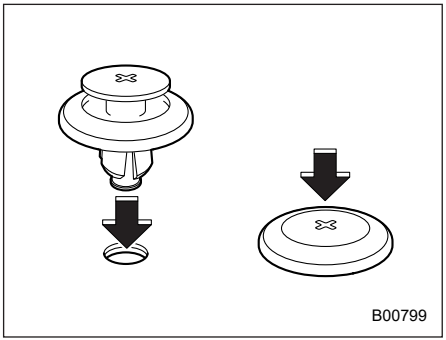

Type C clips

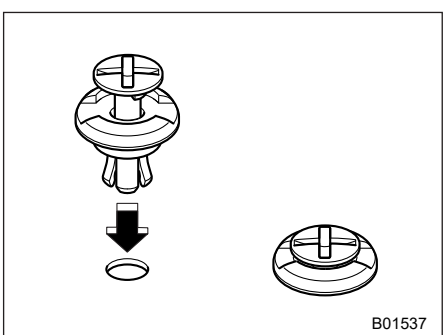

Type D clips

Insert the clip without the center portion first and then push the center portion of the clip into the hole.

11-4. Engine Hood

⚠ CAUTION

- **Be extremely careful not to catch fingers or other objects when closing the engine hood.**
- **Do not push the hood forcibly to close it. It could deform the metal.**
- **Be extremely careful opening the engine hood when the wind is strong. The engine hood could close suddenly, possibly causing injuries from slamming.**
- **Do not install accessories other than genuine SUBARU parts to the engine hood. If the engine hood becomes too heavy, the stay may not be able to support holding it open.**
- **Check that the end of the hood stay is inserted into the slot. If it is not inserted properly, the hood may drop and cause injury.**

To open the hood:

1. If the wiper blades are lifted off the windshield, return them to their original positions.

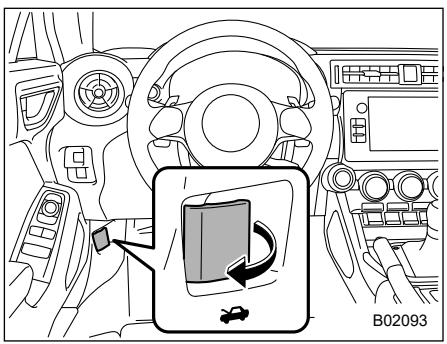

2. Pull the hood release knob under the instrument panel.

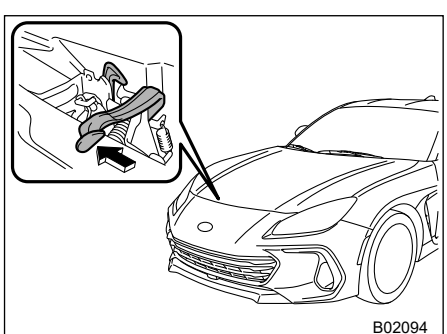

– CONTINUED –

3. Release the secondary hood lock by moving the lever between the front grille and the hood toward the left.

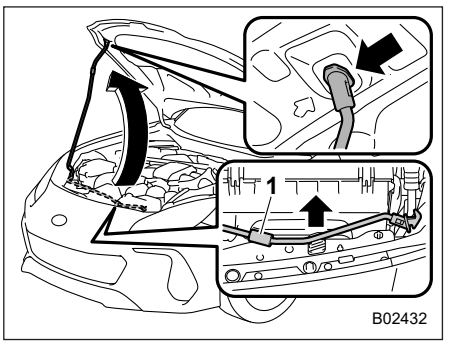

1) Grip

4. Lift up the hood, release the hood prop from its retainer and put the end of the hood prop into the slot in the hood. Hold the grip for handling the hood prop.

To close the hood:

1. Lift the hood slightly and remove the hood prop from the slot in the hood and return the prop to its retainer.
2. Lower the hood to a height of approximately 7.8 to 11.8 in (20 to 30 cm) above its closed position and then let it drop.
3. After closing the hood, be sure the hood is securely locked.

If this does not close the hood, release it from a slightly higher position.

⚠ WARNING

Always check that the hood is properly locked before you start driving. If it is not, it might fly open while the vehicle is moving and block your view, which may cause an accident and serious bodily injury.

11-5. Engine Compartment Overview

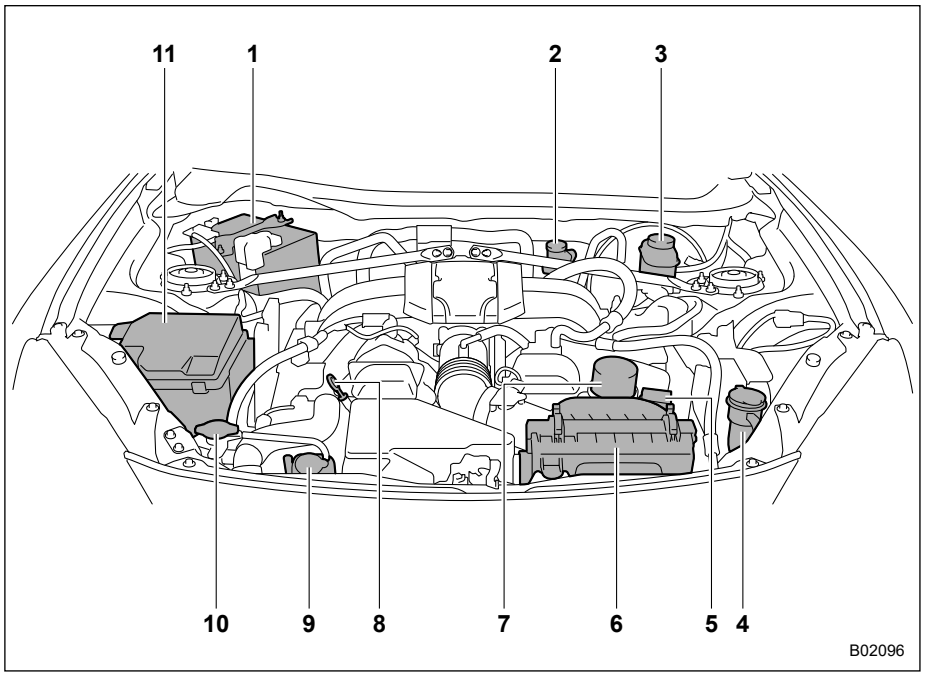

1) Battery (page 379)
2) Clutch fluid reservoir (MT models) (page 360)
3) Brake fluid reservoir (page 359)
4) Windshield washer fluid tank (page 375)
5) Engine oil filler cap (page 352)
6) Air cleaner case (page 356)
7) Engine oil filter (page 353)
8) Engine oil level gauge (page 352)
9) Engine coolant reservoir (page 355)
10) Radiator cap (page 355)
11) Main fuse box (page 380)

11-6. Engine Oil

⚠ CAUTION

- **If the level gauge is not pulled out easily, twist the level gauge right and left, then pull it out. Otherwise, you may be injured accidentally straining yourself.**
- **Use only engine oil with the recommended grade and viscosity.**
- **Be careful not to spill engine oil when adding it. If oil touches the exhaust pipe, it may cause a bad smell, smoke, and/or a fire. If engine oil gets on the exhaust pipe, be sure to wipe it off.**

■ Engine Oil Consumption

Some engine oil will be consumed while driving. The rate of consumption can be affected by such factors as transmission type, driving style, terrain and temperature. Under the following conditions, oil consumption can be increased and thus require refilling between maintenance intervals:

- When the engine is new and within the break-in period
- When the engine oil is of lower quality
- When the incorrect oil viscosity is used
- When engine braking is employed (repeatedly)
- When the engine is operated at high engine speeds (for extended periods of time)
- When the engine is operated under heavy loads (for extended periods of time)
- When the engine idles for extended periods of time
- When the vehicle is operated in stop and go and/or heavy traffic situations
- When the vehicle is used under severe thermal conditions
- When the vehicle accelerates and decelerates frequently

Under these or similar conditions, you should check your oil at least every 2nd fuel fill-up and change your engine oil more frequently. Different drivers in the same car may experience different results. If your oil consumption rate is greater than expected, contact your authorized SUBARU retailer who may perform a test under controlled conditions.

■ Checking the Oil Level

1. Park the vehicle on a level surface and stop the engine. If you check the oil level just after stopping the engine, wait for at least 5 minutes for the oil to drain back into the oil pan before checking the level.

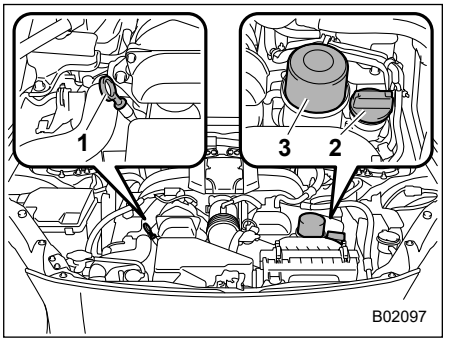

1) Oil level gauge
2) Oil filler cap
3) Oil filter

⚠ CAUTION

If the level gauge cannot be pulled out easily, twist the level gauge right and left, then gently pull it out. Otherwise, you may be injured accidentally straining yourself.

2. Pull out the level gauge, wipe it clean, and insert it again.
3. Be sure the level gauge is correctly inserted until it stops.

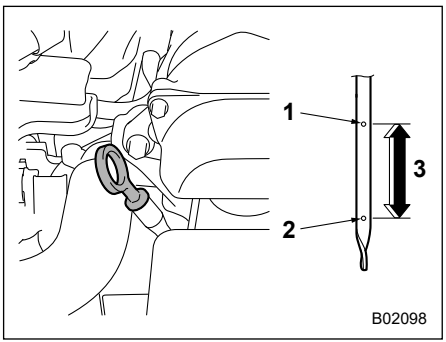

1) Full level
2) Low level
3) Approximately 1.1 US qt (1.0 liter, 0.9 Imp qt) from low level to full level

4. Pull out the oil level gauge again.

5. Check the oil levels on both sides of the level gauge. The engine oil level must be judged by the lowest of the two levels. If the oil level is below the low level mark, add oil so that the full level is reached.

⚠ CAUTION

- **Be careful not to touch the engine oil filter when removing the oil filler cap. Doing so may result in a burn, a pinched finger, or may cause some other injury.**
- **Use only engine oil with the recommended grade and viscosity.**
- **Be careful not to spill engine oil when adding it. If oil touches the exhaust pipe, it may cause a bad smell, smoke, and/or a fire. If engine oil gets on the exhaust pipe, be sure to wipe it off.**

To add engine oil, remove the engine oil filler cap and slowly pour engine oil through the filler neck. After pouring oil into the engine, you must use the level gauge to confirm that the oil level is correct.

NOTE

- **To prevent overfilling the engine oil, do not add any additional oil above the full level when the engine is cold.**

■ Changing the Oil and Oil Filter

Change the oil and oil filter according to the maintenance schedule in the “Warranty and Maintenance Booklet”.

NOTE

- **Changing the engine oil and oil filter should be performed by a well-trained expert. Contact your SUBARU dealer for changing the engine oil and oil filter. Fully trained mechanics are on standby at a SUBARU dealer to utilize the special tools, spare parts and recommended oil for this work, and also, used oils are properly disposed of.**
- **If performing oil replacement yourself, observe the local regulations and dispose of waste oil properly.**

■ Recommended Grade and Viscosity

⚠ CAUTION

Use only engine oil with the recommended grade and viscosity.

Refer to "Engine Oil" ☞P389.

NOTE

Engine oil viscosity (thickness) affects fuel economy. Oils of lower viscosity provide better fuel economy. However, in hot weather, oil of higher viscosity is required to properly lubricate the engine.

– CONTINUED –

■ Synthetic Oil

You should use synthetic engine oil that meets the same requirements given for conventional engine oil. When using synthetic oil, you must use oil of the same classification, viscosity and grade shown in this Owner's Manual. Refer to "Engine Oil" ☞P389. Also, you must follow the oil and filter changing intervals shown in the Warranty and Maintenance booklet.

NOTE

Synthetic oil of the grade and viscosity noted in chapter 12 is the recommended engine oil for optimum engine performance. Conventional oil may be used if synthetic oil is unavailable.

11-7. Cooling System

⚠ WARNING

Never remove the radiator cap until the engine has been shut off and has cooled down completely. Since the coolant is under pressure, you may suffer serious burns from a spray of boiling hot coolant when the cap is removed.

⚠ CAUTION

- **Vehicles are filled at the factory with SUBARU SUPER COOLANT that does not require the first change for 11 years/137,500 miles (11 years/220,000 km). This coolant should not be mixed with any other brand or type of coolant during this period. Mixing with a different coolant will reduce the life of the coolant. When necessary to top off the coolant for any reason, use only SUBARU SUPER COOLANT.**

  If the SUBARU SUPER COOLANT is diluted with another brand or type, the maintenance interval is shortened to that of the mixing coolant.

- **Do not splash the engine coolant over painted parts. The alcohol contained in the engine coolant may damage the paint surface.**

■ Cooling Fan, Hose and Connections

Your vehicle employs an electric cooling fan which is thermostatically controlled to operate when the engine coolant reaches a specific temperature.

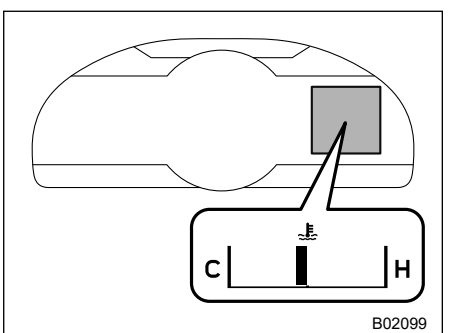

If the radiator cooling fan does not operate even when the engine coolant temperature gauge exceeds the normal operating range, the cooling fan circuit may be defective. Refer to "Engine Coolant Temperature Gauge" ☞P133.

Check the fuse and replace it if necessary. Refer to "Fuses" ☞P380. If the fuse is not blown, have the cooling system checked by your SUBARU dealer.

If the frequent addition of coolant is necessary between vehicle service visits, it is recommended that you have your vehicle inspected by an authorized SUBARU dealer to check for leaks, damage, or looseness.

■ Engine Coolant

▼ Checking the coolant level

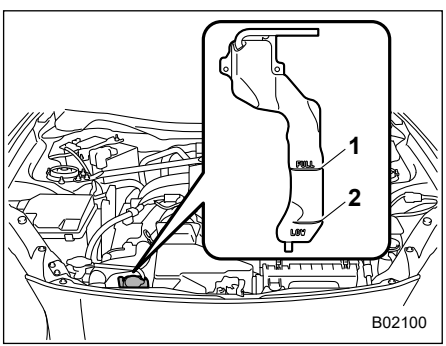

1) "FULL" level mark
2) "LOW" level mark

Check the coolant level, such as at fuel stops.

1. Check the coolant level on the outside of the reservoir while the engine is cool.
2. If the level is close to or lower than the "LOW" level mark, add coolant up to the "FULL" level mark. If the reserve tank is empty, remove the radiator cap and refill coolant up to just below the filler neck as shown in the following illustration.

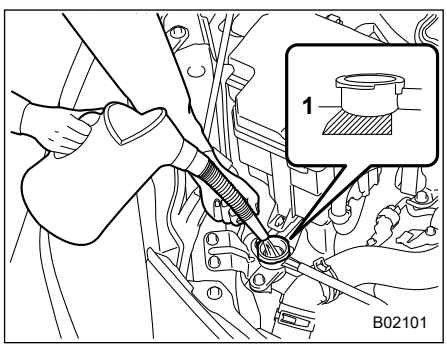

1) Fill up to this level.

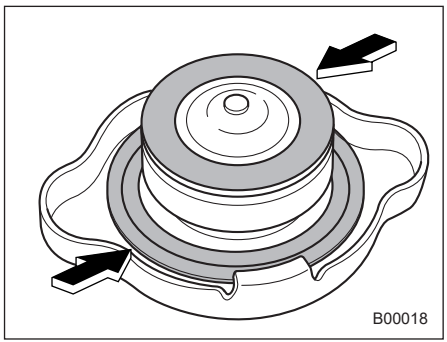

3. After refilling the reserve tank and the radiator, check the radiator cap for debris and the gasket rubber for damage.

⚠ CAUTION

- **Be careful not to spill engine coolant when adding it. If coolant touches the exhaust pipe, it may cause a bad smell, smoke, and/or a fire. If engine coolant gets on the exhaust pipe, be sure to wipe it off.**
- **Do not splash the engine coolant over painted parts. The alcohol contained in the engine coolant may damage the paint surface.**

– CONTINUED –

4. Reinstall the cap and check that the rubber gaskets inside the radiator cap are in the proper position.

▼ **Changing the coolant**

It may be difficult to change the coolant. Have the coolant changed by your SUBARU dealer if necessary.

The coolant should be changed according to the maintenance schedule in the “Warranty and Maintenance Booklet”.

11-8. Air Cleaner Element

⚠ WARNING

Do not operate the engine with the air cleaner element removed. The air cleaner element not only filters intake air but also stops flames if the engine backfires. If the air cleaner element is not installed when the engine backfires, you could be burned.

⚠ CAUTION

When replacing the air cleaner element, use a genuine SUBARU air cleaner element. If it is not used, there is the possibility of causing a negative effect to the engine.

The air cleaner element functions as a filter screen. When the element is perforated or removed, engine wear will be excessive and engine life shortened.

The air cleaner element is a dry type. It is unnecessary to clean or wash the element.

■ Replacing the Air Cleaner Element

Replace the air cleaner element according to the maintenance schedule in the “Warranty and Maintenance Booklet”. Under extremely dusty conditions, replace it more frequently. It is recommended that you always use genuine SUBARU parts.

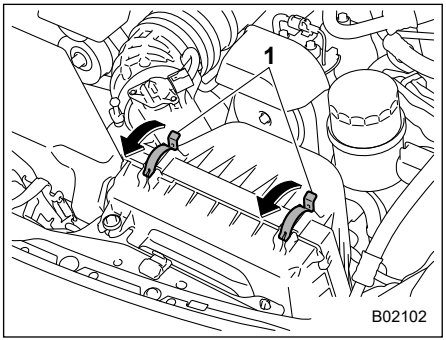

1) Clip

1. Unsnap the two clips holding the air cleaner case (rear).

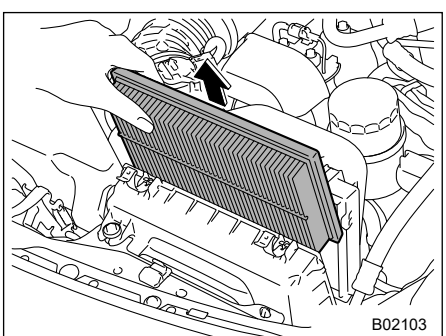

2. Open the air cleaner case and remove the air cleaner element.

⚠ CAUTION

If the inside of the air cleaner case is extremely soiled (for example, by sand), contact a SUBARU dealer and have the air cleaner case cleaned.

3. If you find large foreign objects such as leaves inside the air cleaner case, remove the foreign objects.

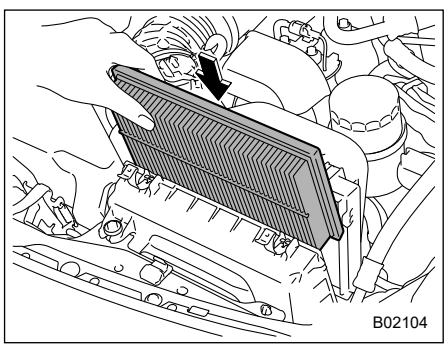

4. Install a new air cleaner element in the way the longitudinal side and the transverse side face as shown in the illustration.

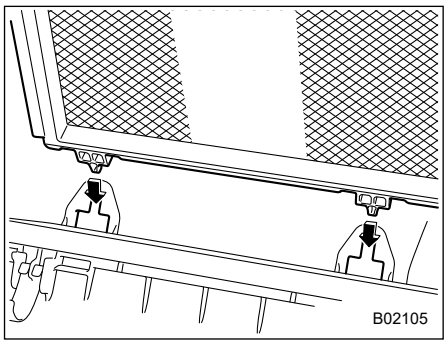

5. To install the air cleaner case (rear), insert the two projections on the air cleaner case (rear) into the slits on the air cleaner case (front).

6. Install in the reverse order of removal.

11-9. Spark Plugs

It may be difficult to replace the spark plugs. It is recommended that you have the spark plugs replaced by your SUBARU dealer.

The spark plugs should be replaced according to the maintenance schedule in the “Warranty and Maintenance Booklet”.

■ Recommended Spark Plugs

Refer to "Electrical System" ☞P393.

11-10. Drive Belt

It is unnecessary to check the deflection of the drive belt periodically because your engine is equipped with an automatic belt tension adjuster. However, replacement of the belt should be done according to the maintenance schedule in the “Warranty and Maintenance Booklet”. Consult your SUBARU dealer for replacement.

If the belt is loose, cracked or worn, we recommend that contact your SUBARU dealer.

11-11. Automatic Transmission Fluid

It is not necessary to check the transmission oil level. Check that there are no cracks, damage or leakage. However, have the oil inspected by your SUBARU dealer according to the maintenance schedule in the “Warranty and Maintenance Booklet”. Consult your SUBARU dealer for details.

■ Recommended Grade and Viscosity

Each oil manufacturer has its own base oils and additives. Never use different brands together. For details, refer to "Fluids" ☞P391.

11-12. Differential Gear Oil

It is not necessary to check the gear oil level. Check that there are no cracks, damage or leakage. However, the oil inspection should be performed according to the maintenance schedule in the “Warranty and Maintenance Booklet”. Consult your SUBARU dealer for details.

■ Recommended Grade and Viscosity

Each oil manufacturer has its own base oils and additives. Never use different brands together. For details, refer to "Manual Transmission and Differential Gear Oil" ☞P391.

⚠ CAUTION

Using a differential gear oil other than the specified oil may cause a decline in vehicle performance.

11-13. Manual Transmission Oil

It is not necessary to check the transmission oil level. Check that there are no cracks, damage or leakage. However, have the oil inspected by your SUBARU dealer according to the maintenance schedule in the “Warranty and Maintenance Booklet”. Consult your SUBARU dealer for details.

■ Recommended Grade and Viscosity

Each oil manufacturer has its own base oils and additives. Never use different brands together. For details, refer to "Manual Transmission and Differential Gear Oil" ☞P391.

11-14. Brake Fluid

■ Checking the Fluid Level

⚠ WARNING

- **Never let brake fluid contact your eyes because brake fluid can be harmful to your eyes. If brake fluid gets in your eyes, immediately flush them thoroughly with clean water. For safety, when performing this work, wearing eye protection is advisable.**
- **Brake fluid absorbs moisture from the air. Any absorbed moisture can cause a dangerous loss of braking performance.**
- **If the vehicle requires frequent refilling, there may be a leak. If you suspect a problem, have the vehicle checked at your SUBARU dealer.**

⚠ CAUTION

- **When adding brake fluid, be careful not to allow any dirt into the reservoir.**
- **Never splash the brake fluid over painted surfaces or rubber parts. Alcohol contained in the brake fluid may damage them.**

– CONTINUED –

- **Be careful not to spill brake fluid when adding it. If brake fluid touches the exhaust pipe, it may cause a bad smell, smoke, and/or a fire. If brake fluid gets on the exhaust pipe, be sure to wipe it off.**

Visually check the brake fluid level of the reservoir monthly on the even surface.

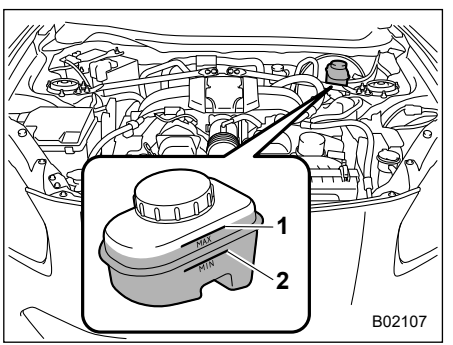

1) “MAX” level line
2) “MIN” level line

Be sure to check the brake fluid level from the outside of the reservoir. If the fluid level is below “MIN”, top up brake fluid to “MAX”. Use only brake fluid from a sealed container.

■ Recommended Brake Fluid

Refer to "Fluids" ☞P391.

⚠ CAUTION

Never use different brands of brake fluid together. Also, avoid mixing DOT 3 and DOT 4 brake fluids even if they are the same brand.

11-15. Clutch Fluid (MT models)

■ Checking the Fluid Level

⚠ WARNING

Never let clutch fluid contact your eyes because clutch fluid can be harmful to your eyes. If clutch fluid gets in your eyes, immediately flush them thoroughly with clean water. For safety, when performing this work, wearing eye protection is advisable.

⚠ CAUTION

- **Clutch fluid absorbs moisture from the air. Any absorbed moisture can cause improper clutch operation.**
- **If the vehicle requires frequent refilling, there may be a leak. If you suspect a problem, have the vehicle checked at your SUBARU dealer.**
- **When you add clutch fluid, be careful not to allow any dirt into the tank.**

- **Never splash the clutch fluid over painted surfaces or rubber parts. Alcohol contained in the clutch fluid may damage them.**
- **Be careful not to spill clutch fluid when adding it. If clutch fluid touches the exhaust pipe, it may cause a bad smell, smoke, and/or a fire. If clutch fluid gets on the exhaust pipe, be sure to wipe it off.**
- **Check the fluid level for the clutch system at the inboard side of the reservoir. You cannot check the fluid level at the outboard side of the reservoir.**

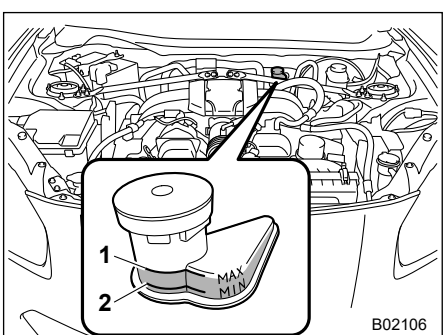

1) "MAX" level line
2) "MIN" level line

Visually check the fluid level of the reservoir monthly on the even surface. Be sure to check the clutch fluid level from the outside of the reservoir. If the fluid level is below "MIN", top up clutch fluid to "MAX". Use only clutch fluid from a sealed container.

■ Recommended Clutch Fluid

Refer to "Fluids" ☞P391.

⚠ CAUTION

Never use different brands of clutch fluid together. Also, avoid mixing DOT 3 and DOT 4 brake fluids even if they are the same brand.

11-16. Brake Booster

The brake booster utilizes the vacuum produced by the vacuum pump to reduce the force required to depress the brake pedal.

The vacuum in the brake booster may be insufficient if the brake pedal is depressed when the engine is stopped or after the vehicle has been parked for a long period of time. It such cases, it is necessary to depress the brake pedal using greater force than usual.

11-17. Brake Pedal

Check the brake pedal free play and reserve distance according to the maintenance schedule in the “Warranty and Maintenance Booklet”.

11-18. Clutch Pedal (MT models)

Check the clutch pedal free play according to the maintenance schedule in the “Warranty and Maintenance Booklet”.

11-19. Replacement of Brake Pad and Lining

⚠ CAUTION

- **If you continue to drive despite the scraping noise from the audible brake pad wear indicator, it will result in the need for costly brake rotor repair or replacement.**
- **It is recommended that you disconnect the vehicle battery before replacing the brake pad. However, it is dangerous to disconnect the vehicle battery. We recommend that you have your SUBARU dealer replace the brake pad and lining.**

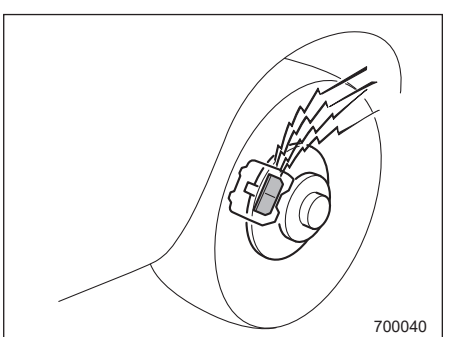

The disc brakes have audible wear indicators on the brake pads. If the brake pads wear close to their service limit, the wear indicator makes a very audible scraping noise when the brake pedal is applied.

If you hear this scraping noise each time you apply the brake pedal, have the brake pads serviced by your SUBARU dealer as soon as possible.

■ Breaking-in of New Brake Pads and Linings

When replacing the brake pad or lining, use only genuine SUBARU parts. After replacement, the new parts must be broken in as follows.

▼ Brake pad and lining

While maintaining a speed of 30 to 40 mph (50 to 65 km/h), step on the brake pedal lightly. Repeat this five or more times.

▼ Parking brake lining

1. Drive the vehicle at a speed of approximately 22 mph (35 km/h).
2. With the parking brake release button pushed in, pull the parking brake lever SLOWLY and GENTLY (pulling with a force of approximately 33.7 lbf [150 N, 15.3 kgf]).
3. Drive the vehicle for approximately 220 yards (200 meters) in this condition.
4. Wait 5 to 10 minutes for the parking brake to cool down. Repeat this procedure.
5. Check the parking brake lever travel. If the parking brake lever travel is out of the specified range, adjust it by turning the adjusting nut located on the parking brake lever.

Parking brake stroke:

7 – 8 notches / 45 lbf (200 N, 20.4 kgf)

⚠ WARNING

A safe location and situation should be selected for break-in driving.

⚠ CAUTION

Pulling the parking brake lever too forcefully may cause the rear wheels to lock. To avoid this, be certain to pull the lever up slowly and gently.

11-20. Parking Brake Stroke

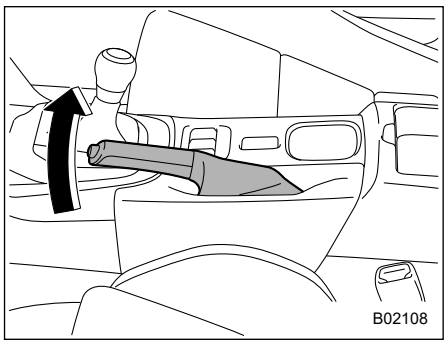

Check the parking brake stroke according to the maintenance schedule in the “Warranty and Maintenance Booklet”.

11-21. Tires and Wheels

■ Types of Tires

You should be familiar with type of tires present on your vehicle.

▼ Summer tires

The factory-installed tires on your new vehicle are summer tires.

Summer tires are high-speed capability tires best suited for highway driving under dry conditions.

Summer tires are inadequate for driving on slippery roads such as on snow-covered or icy roads.

If you drive your vehicle on snow-covered or icy roads, we strongly recommend the use of winter (snow) tires.

When installing winter tires, be sure to replace all four tires.

▼ All season tires

All season tires are designed to provide an adequate measure of traction, handling and braking performance in year-round driving including snowy and icy road conditions. However all season tires do not offer as much traction performance as winter (snow) tires in heavy or loose snow or on icy roads.

All season tires are identified by “ALL SEASON” and/or “M+S” (Mud & Snow) on the tire sidewall.

▼ Winter (snow) tires

Winter tires are best suited for driving on snow-covered and icy roads. However winter tires do not perform as well as summer tires and all season tires on roads other than snow-covered and icy roads.

NOTE

If the tread wears down below 0.16 in. (4mm) on snow tires the effectiveness of snow tires is lost.

▼ Low profile tires

Generally, low profile tires will wear more rapidly and tire grip performance will be reduced on snowy and/or icy roads when compared to standard tires. Be sure to use snow tires or tire chains on snowy and/or icy roads and drive carefully at a speed appropriate for road and weather conditions.

NOTE

Low profile tires may cause greater damage than usual to the wheel when receiving impact from the road surface. Therefore pay attention to the following:

- **Be sure to use proper tire inflation pressure. If tires are under-inflated, they may be damaged more severely.**
- **Avoid pot holes, uneven pavement, curbs and other road hazards. Failure to do so may lead to severe tire and wheel damage.**

■ Tire Pressure Monitoring System (TPMS) (If Equipped)

The tire pressure monitoring system provides the driver with a warning message by sending a signal from a sensor that is installed in each wheel when tire pressure is severely low. The tire pressure monitoring system will activate only when the vehicle is driven. Also, this system may not react immediately to a sudden drop in tire pressure (for example, a blow-out caused by running over a sharp object).

If you adjust the tire pressures in a warm garage and will then drive the vehicle in cold outside air, the resulting drop in tire pressures may cause the low tire pressure warning light to illuminate. To avoid this problem when adjusting the tire pressures in a warm garage, inflate the tires to pressures higher than those shown on the tire inflation pressure label. Specifically, inflate them by an extra 1 psi (6.9 kPa, 0.07 kgf/cm^2) for every difference of 10°F

(5.6°C) between the temperature in the garage and the temperature outside. By way of example, the following table shows the required tire pressures that correspond to various outside temperatures when the temperature in the garage is 60°F (15.5°C).

Example:

Tire size: 215/40R18 85Y

Standard tire pressures:

Front: 35 psi (240 kPa, 2.4 kgf/cm^2)

Rear: 35 psi (240 kPa, 2.4 kgf/cm^2)

Garage temperature: 60°F (15.5°C)

Outside temperature	Adjusted pressure [psi (kPa, kgf/cm^2)]	
	Front	Rear
30°F (−1°C)	38 (260, 2.6)	38 (260, 2.6)
10°F (−12°C)	40 (275, 2.75)	40 (275, 2.75)
−10°F (−23°C)	42 (290, 2.9)	42 (290, 2.9)

Example:

Tire size: 215/45R17 87W

Standard tire pressures:

Front: 35 psi (240 kPa, 2.4 kgf/cm^2)

Rear: 35 psi (240 kPa, 2.4 kgf/cm^2)

Garage temperature: 60°F (15.5°C)

Outside temperature	Adjusted pressure [psi (kPa, kgf/cm^2)]	
	Front	Rear
30°F (−1°C)	38 (260, 2.6)	38 (260, 2.6)
10°F (−12°C)	40 (275, 2.75)	40 (275, 2.75)
−10°F (−23°C)	42 (290, 2.9)	42 (290, 2.9)

If the low tire pressure warning light illuminates when you drive the vehicle in cold outside air after adjusting the tire pressures in a warm garage, re-adjust the tire pressures using the method described above. Then, increase the vehicle speed to at least 25mph (40km/h) and check to see that the low tire pressure warning light goes off a few minutes later. If the low tire pressure warning light does not go off, the tire pressure monitoring system may not be functioning normally. In this event, go to a SUBARU dealer to have the system inspected as soon as possible.

While the vehicle is driven, friction between tires and the road surface causes the tires to warm up. After illumination of the low tire pressure warning light, any increase in the tire pressures caused by an increase in the outside air temperature or by an increase in the temperature in the tires can cause the low tire pressure warning light to go off.

System resetting is necessary when the wheels are changed (for example, a switch to snow tires) and new TPMS valves are installed on the newly fitted wheels. Have this work performed by a SUBARU dealer following wheel replacement.

It may not be possible to install TPMS valves on certain wheels that are on the market. Therefore, if you change the wheels (for example, a switch to snow tires), use wheels that have the same part number as the standard-equipment wheels. Without four operational TPMS valve/sensors on the wheels, the TPMS will not fully function and the warning light in the instrument panel will illuminate steadily after blinking for approximately one minute.

When a tire is replaced, adjustments are necessary to ensure continued normal operation of the tire pressure monitoring system. As with wheel replacement, therefore, you should have the work performed by a SUBARU dealer.

– CONTINUED –

⚠ WARNING

If the low tire pressure warning light does not illuminate briefly after the ignition switch is turned ON or the light illuminates steadily after blinking for approximately one minute, you should have your Tire Pressure Monitoring System checked at a SUBARU dealer as soon as possible.

If this light illuminates while driving, never brake suddenly. Instead, perform the following procedure. Otherwise an accident involving serious vehicle damage and serious personal injury could occur.

1) **Keep driving straight ahead while gradually reducing speed.**
2) **Slowly pull off the road to a safe place.**
3) **Check the pressure for all four tires and adjust the pressure to the COLD tire pressure shown on the tire inflation pressure label on the door pillar on the driver's side.**

If this light still illuminates while driving after adjusting the tire pressure, a tire may have significant damage and a fast leak that causes the tire to lose air rapidly. If you have a flat tire, refer to "Flat Tires" ☞P311.

When a replacement tire is mounted or a wheel rim is replaced without the original pressure sensor/transmitter being transferred, the low tire pressure warning light will illuminate steadily after blinking for approximately one minute. This indicates the TPMS is unable to monitor all four road wheels. Contact your SUBARU dealer as soon as possible for tire and sensor replacement and/or system resetting. If the light illuminates steadily after blinking for approximately one minute, promptly contact a SUBARU dealer to have the system inspected.

■ Tire Inspection

Check on a daily basis that the tires are free from serious damage, nails, and stones. At the same time, check the tires for abnormal wear. Contact your SUBARU dealer immediately if you find any problem.

NOTE

• When the wheels and tires strike curbs or are subjected to harsh treatment as when the vehicle is driven on a rough surface, they can suffer damage that cannot be seen with the naked eye. This type of damage does not become evident until time has passed. Try not to drive over curbs, potholes or on other rough surfaces. If doing so is unavoidable, keep the vehicle's speed down to a walking pace or less, and approach the curbs as squarely as possible. Also, make sure the tires are not pressed against the curb when you park the vehicle.

• If you feel unusual vibration while driving or find it difficult to steer the vehicle in a straight line, one of the tires and/or wheels may be damaged. Drive slowly to the nearest authorized SUBARU

dealer and have the vehicle inspected.

- **Tires should be replaced if:**
  - **– You have tire damage such as cuts, splits, cracks deep enough to expose the fabric or bulges indicating internal damage**
  - **– A tire goes flat repeatedly or cannot be properly repaired due to the size or location of a cut or other damage**

If you are not sure, consult with your SUBARU dealer.

- **Any tires over 6 years old must be checked by a qualified technician even if they have seldom or never been used or damage is not obvious.**

■ Tire Pressures and Wear

Maintaining the correct tire pressures helps to maximize the tires' service lives and is essential for good running performance. Check and, if necessary, adjust the pressure of each tire at least once a month and before any long journey.

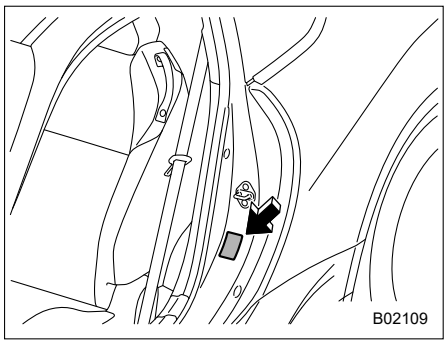

Tire inflation pressure label

Check the tire pressures when the tires are cold. Use a pressure gauge to adjust the tire pressures to the values shown on the tire inflation pressure label. The tire inflation pressure label is located on the center pillar on the driver's side.

Driving even a short distance warms up the tires and increases the tire pressures. Also, the tire pressures are affected by the outside temperature. It is best to check tire pressure outdoors before driving the vehicle.

When a tire becomes warm, the air inside it expands, causing the tire pressure to increase. Be careful not to mistakenly release air from a warm tire to reduce its pressure.

NOTE

- **The air pressure in a tire increases by approximately 4.3 psi (30 kPa, 0.3 kgf/cm^2) when the tire becomes warm.**
- **The tires are considered cold when the vehicle has been parked for at least 3 hours or has been driven less than 1 mile (1.6 km).**

⚠ WARNING

Do not let air out of warm tires to adjust pressure. Doing so will result in low tire pressure.

Incorrect tire pressures detract from controllability and ride comfort, and they cause the tires to wear abnormally.

- Correctly inflated tires (tread worn evenly)

– CONTINUED –

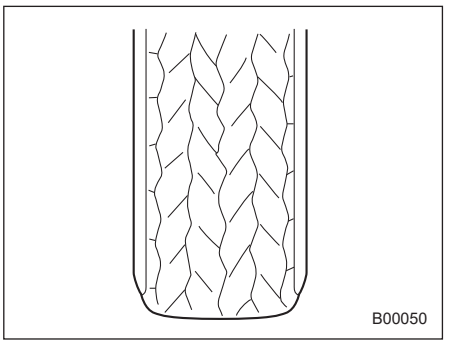

Roadholding is good, and steering is responsive. Rolling resistance is low, so fuel consumption is also lower.

- Under inflated tires (tread worn at shoulders)

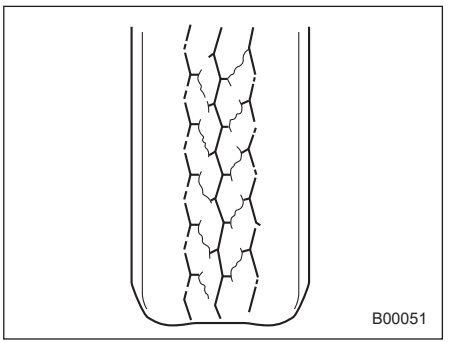

Rolling resistance is high, so fuel consumption is also higher.

- Over inflated tires (tread worn in center)

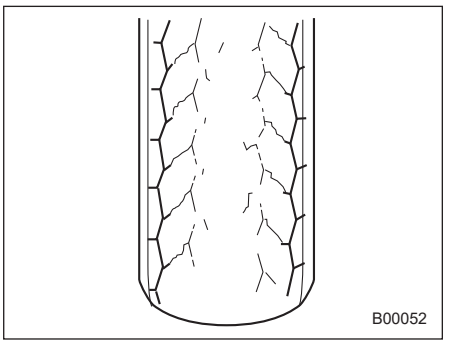

Ride comfort is poor. Also, the tire magnifies the effects of road surface bumps and dips, possibly resulting in vehicle damage.

⚠ WARNING

Driving at high speeds with excessively low tire pressures can cause the tires to deform severely and to rapidly become hot. A sharp increase in temperature could cause tread separation, and destruction of the tires. The resulting loss of vehicle control could lead to an accident.

■ Wheel Balance

Each wheel was correctly balanced when your vehicle was new, but the wheels will become unbalanced as the tires become worn during use. Wheel imbalance causes the steering wheel to vibrate slightly at certain vehicle speeds and detracts from the vehicle's straight-line stability. It can also cause steering and suspension system problems and abnormal tire wear. If you suspect that the wheels are not correctly balanced, have them checked and adjusted by your SUBARU dealer. Also have them adjusted after tire repairs and after tire rotation.

⚠ CAUTION

Loss of correct wheel alignment causes the tires to wear on one side and reduces the vehicle's running stability. Contact your SUBARU dealer if you notice abnormal tire wear.

NOTE

The suspension system is designed to hold each wheel at a certain alignment (relative to the other wheels and to the road) for optimum straight-line stability and cornering performance.

■ Wear Indicators

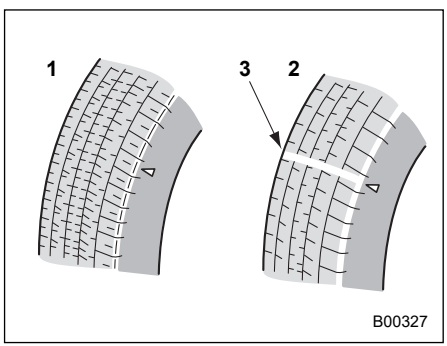

1) New tread
2) Worn tread
3) Tread wear indicator

Each tire incorporates a tread wear indicator, which becomes visible when the depth of the tread grooves decreases to 0.063 in (1.6 mm). A tire must be replaced when the tread wear indicator appears as a solid band across the tread.

⚠ WARNING

When a tire's tread wear indicator becomes visible, the tire is worn beyond the acceptable limit and must be replaced immediately. With a tire in this condition, driving at high speeds in wet weather can cause the vehicle to hydroplane. The resulting loss of vehicle control can lead to an accident.

NOTE

For safety, inspect the tire tread regularly and replace the tires before their tread wear indicators become visible.

– CONTINUED –

■ Rotational Direction of Tires

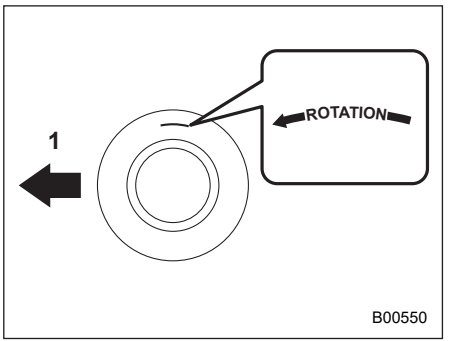

Example of rotational direction marked on the sidewall
1) Front

If the tires have specific rotational direction, refer to the arrow marked on the side wall.

The arrow should be pointing forward direction when the wheels are fitted.

■ Tire Rotation

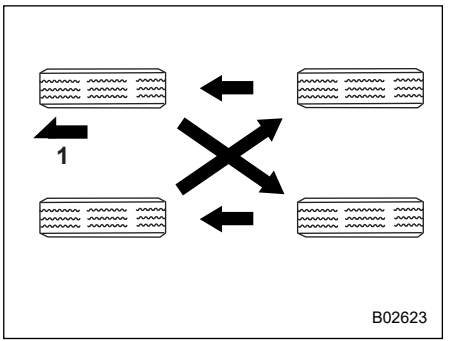

Vehicles equipped with 4 nonunidirectional tires
1) Front

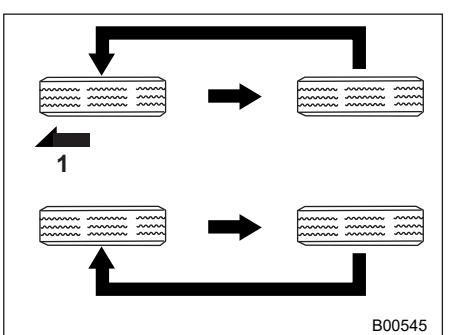

Vehicles equipped with unidirectional tires
1) Front

Tire wear varies from wheel to wheel. Move the tires to the positions shown in the illustration each time they are rotated. For the tire rotation schedule, refer to the “Warranty and Maintenance Booklet”.

Replace any damaged or unevenly worn tire at the time of rotation. After tire rotation, adjust the tire pressures and make sure the wheel nuts are correctly tightened.

After driving approximately 600 miles (1,000 km), check the wheel nuts again and retighten any nut that has become loose.

■ Tire Replacement

The wheels and tires are important and integral parts of your vehicle’s design; they cannot be changed arbitrarily. The tires fitted as standard equipment are optimally matched to the characteristics of the vehicle and were selected to give the best possible combination of running performance, ride comfort, and service life. It is

essential for every tire to have a size and construction matching those shown on the tire inflation pressure label and to have a speed symbol and load index matching those shown on the tire inflation pressure label.

Using tires of a non-specified size detracts from controllability, ride comfort, braking performance, speedometer accuracy and odometer accuracy. It also creates incorrect body-to-tire clearances and inappropriately changes the vehicle's ground clearance.

All four tires must be the same in terms of manufacturer, brand (tread pattern), construction, and size. You are advised to replace the tires with new ones that are identical to those fitted as standard equipment.

For safe vehicle operation, SUBARU recommends replacing all four tires at the same time.

⚠ WARNING

- **When replacing or installing tire(s), all four tires must be the same for the following items.**

  (a) Size

  (b) Speed symbol

  (c) Load index

  (d) Circumference

  (e) Construction

  (f) Manufacturer

  (g) Brand (tread pattern)

  (h) Degrees of wear

  For items (a) to (c), you must obey the specification that is printed on the tire inflation pressure label. The tire inflation pressure label is located on the driver's center pillar.

  If all four tires are not the same in items (a) to (h), serious mechanical damage could be caused to the drivetrain of the car, and affect the followings.

  - **Ride**
  - **Handling**
  - **Braking**
  - **Speedometer/Odometer calibration**
  - **Clearance between the body and the tires**

  It also may be dangerous and lead to loss of vehicle control, and it can lead to an accident.

- **Use only radial tires. Do not use radial tires together with belted bias tires and/or bias-ply tires. Doing so can dangerously reduce controllability, resulting in an accident.**

– CONTINUED –

▼ **Replacement procedure**

⚠ WARNING

- **Use only the jack and the jack handle provided with your vehicle. The jack supplied with the vehicle is designed only for changing a tire. Never put any part of your body under the vehicle while the vehicle is being supported by the jack. Doing so could result in serious injury or death.**
- **Do not jack up the vehicle on an incline or a loose road surface. The jack can come out of the jacking point or sink into the ground and this can result in serious injury or death.**
- **Before jacking up the vehicle, be sure that there are no occupants or cargo on board.**
- **Do not jack up the vehicle with an object on or underneath the jack. The jack can be unstable and this can result in a severe accident.**
- **Always turn off the engine before raising the tire off the ground using the jack. Never swing or push the vehicle supported with the jack. The jack can come out of the jacking point due to a jolt and this can result in serious injury or death.**
- **All passengers must exit the vehicle before you raise it with the jack. Raising the vehicle with someone inside of it could result in serious injury or death.**
- **Do not start the vehicle while it is supported by the jack. Doing so could result in serious injury or death.**

⚠ CAUTION

Do not hit and bend the disc rotor backing plate when removing and installing the tire. A bent backing plate may scrape against the disc rotor and cause noise while the vehicle is in motion.

NOTE

Contact a SUBARU dealer when jacking up the vehicle using a garage jack.

1. Park on a hard, level surface, whenever possible, then stop the engine.
2. Set the parking brake securely and shift the shift lever in reverse (MT models) or the select lever to the “P” (Park) position (AT models).
3. Turn on the hazard warning flasher and unload all occupants and luggage from the vehicle.

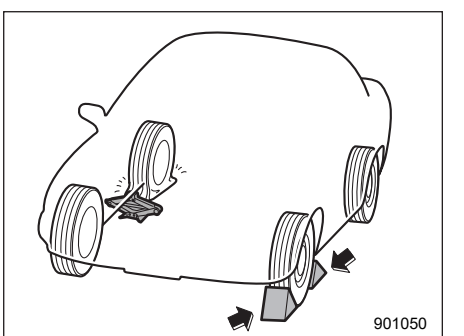

4. Put wheel blocks at the front and rear of the tire diagonally opposite the tire to be replaced.
5. Take out the jack, jack handle and wheel nut wrench.

Refer to "Maintenance Tools" ☞P310.

NOTE

Make sure that the jack is well lubricated before using it.

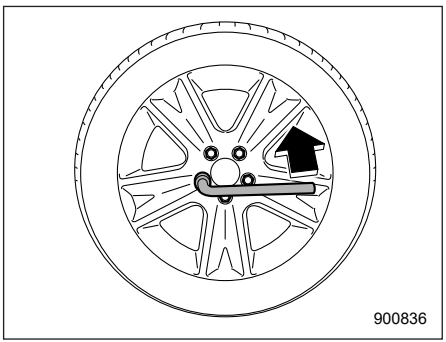

6. Loosen the wheel nuts using the wheel nut wrench but do not remove the nuts.

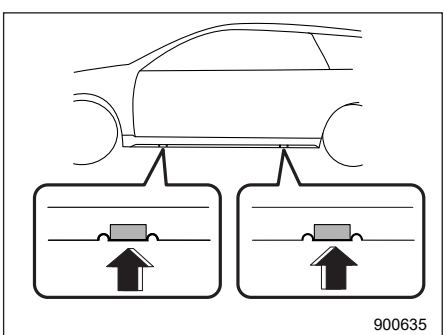

7. Place the jack under the side sill at the front or rear jack-up point closest to the tire to be replaced.

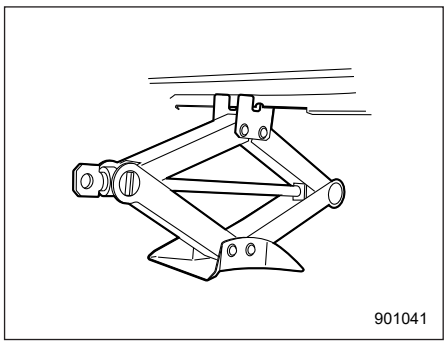

Turn the jackscrew by hand until the jack head engages firmly into the jack-up point.

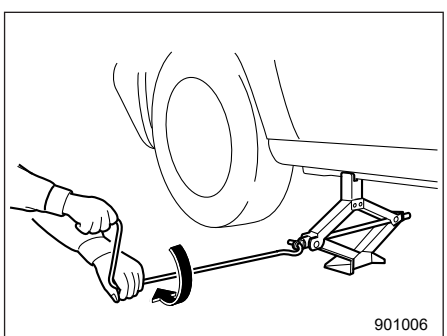

8. Insert the jack handle into the jackscrew, and turn the handle until the tire clears the ground. Do not raise the vehicle higher than necessary.

9. Remove the wheel nuts and the tire to be replaced.

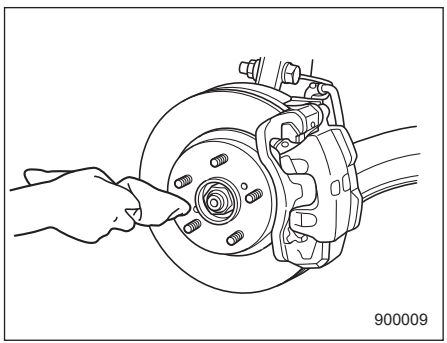

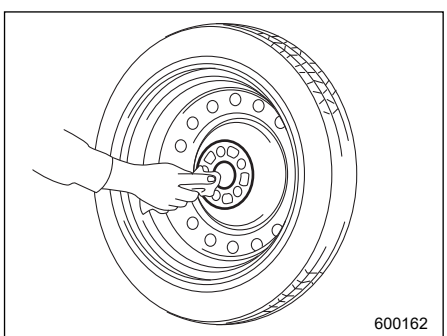

10. Before putting the new tire on, clean the mounting surface of the wheel and hub with a cloth.

– CONTINUED –

11. Put on the new tire. Replace the wheel nuts. Tighten them by hand.

⚠ WARNING

Do not use oil or grease on the wheel studs or nuts when the new tire is installed. This could cause the nuts to become loose and lead to an accident.

12. Turn the jack handle counterclockwise to lower the vehicle.

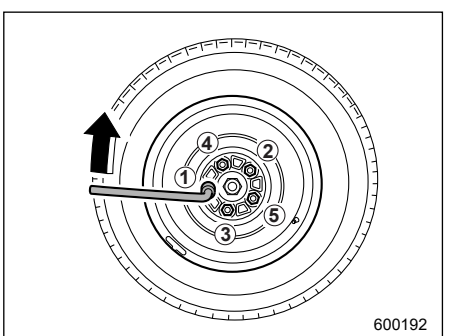

13. Use the wheel nut wrench to securely tighten the wheel nuts to the specified torque, following the tightening order in the illustration.

For the wheel nut tightening torque, refer to "Tires" ☞P393. Never use your foot on the wheel nut wrench or a pipe extension on the wrench because you may exceed the specified torque. Have the wheel nut torque checked at the nearest automotive service facility.

14. Store the jack, jack handle and wheel nut wrench in their storage locations.

⚠ WARNING

Never place a tire or tire changing tools in the passenger compartment after changing a new tire. In a sudden stop or collisions, loose equipment could strike occupants and cause injury. Store the all tools in the proper place.

■ Wheel Replacement

When replacing wheels due, for example, to damage, make sure the replacement wheels match the specifications of the wheels that are fitted as standard equipment. Replacement wheels are available from SUBARU dealers.

⚠ WARNING

Use only those wheels that are specified for your vehicle. Wheels not meeting specifications could interfere with brake caliper operation and may cause the tires to rub against the wheel well housing during turns. The resulting loss of vehicle control could lead to an accident.

NOTE

When any of the wheels are removed and replaced for tire rotation or to change a flat tire, always check the tightness of the wheel nuts after driving approximately 600 miles (1,000 km). If any nut is loose, tighten it to the specified torque.

11-22. Alloy Wheels

Alloy wheels can be scratched and damaged easily. Handle them carefully to maintain their appearance, performance, and safety.

- When any of the wheels is removed and replaced for tire rotation or to change a flat, always check the tightness of the wheel nuts after driving approximately 600 miles (1,000 km). If any nut is loose, tighten it to the specified torque.
- Never apply oil to the threaded parts, wheel nuts, or tapered surface of the wheel.
- Never let the wheel rub against sharp protrusions or curbs.
- When wheel nuts, balance weights, or the center cap is replaced, be sure to replace them with genuine SUBARU parts designed for alloy wheels.

11-23. Windshield Washer Fluid

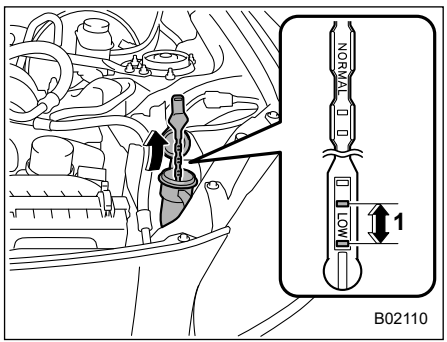

1) "LOW" position

The washer fluid level can be checked by observing the position of the level on the liquid-covered holes in the gauge.
If the level falls below the second hole from the bottom (the "LOW" position), add washer fluid.

Use windshield washer fluid. If windshield washer fluid is unavailable use clean water.

In areas where water freezes in winter, use an anti-freeze type windshield washer fluid.

⚠ CAUTION

Never use engine coolant as washer fluid because it could cause paint damage.

If you fill the windshield washer fluid tank with a fluid with a different concentration from the one used previously, purge the old fluid from the piping between the windshield washer fluid tank and washer nozzles by operating the washer for a certain period of time. Otherwise, if the concentration of the fluid remaining in the piping is too low for the outside temperature, it may freeze and block the nozzles.

⚠ CAUTION

- **Adjust the washer fluid concentration appropriately for the outside temperature. If the concentration is inappropriate, sprayed washer fluid may freeze on the windshield and obstruct your view, and the fluid may freeze in the windshield washer fluid tank.**
- **Be careful foreign matter does not contaminate the washer fluid when filling the tank. Contamination could cause malfunctions, such as clogging the pump.**

– CONTINUED –

- **State or local regulations on volatile organic compounds may restrict the use of methanol, a common windshield washer antifreeze additive. Washer fluids containing non-methanol antifreeze agents should be used only if they provide cold weather protection without damaging your vehicle's paint, wiper blades or washer system.**

11-24. Replacement of Wiper Blades

Grease, wax, insects, or other material on the windshield or the wiper blade results in jerky wiper operation and streaking on the glass. If you cannot remove the streaks after operating the windshield washer or if the wiper operation is jerky, clean the outer surface of the windshield using a sponge or soft cloth with a neutral detergent or mild-abrasive cleaner. Do not, however, use detergent to clean the blade rubbers. Use only a sponge or soft cloth (and no neutral detergent or mild abrasive cleaner) when you clean the blade rubbers. If you wipe the rubber of the blade strongly, the black coating component will peel off, which will cause the wiper to judder. Also, after wiping it off, check that the rubber has not come loose. After cleaning the window glass and wiper blade rubbers, be sure to rinse them with clean water. Rinse the window until the water does not form beads on the glass. This indicates that the glass is clean.

⚠ CAUTION

- **Do not clean the wiper blades with gasoline or a solvent, such as paint thinner or benzine. This will cause deterioration of the wiper blades.**

- **When you wish to raise the passenger-side wiper arm, first raise the driver-side wiper arm. Otherwise, the passenger-side wiper assembly and driver-side wiper assembly will touch each other, possibly resulting in scratches.**
- **Return the passenger-side wiper arm to its original position before returning the driver-side wiper arm to its original position. Otherwise, the passenger-side wiper assembly and driver-side wiper assembly will touch each other, possibly resulting in scratches.**
- **When returning the raised wipers to the original positions, return the wipers slowly on the windshield by hand. Returning the wipers from the detached positions by the spring operation might change the shape of the wiper arm or scratch the windshield.**
- **While removing the wiper blades from the wiper arms, do not return the wiper arms to the original positions. Otherwise, the windshield surface may be scratched.**

If you cannot eliminate the streaking even after following this method, replace the wiper blades using the following procedures.

■ Windshield Wiper Blade Assembly

NOTE

Do not lower the wiper arm while the wiper blade assembly is removed.

1. Raise the wiper arm off the windshield. First raise the driver's side wiper arm and then raise the front passenger's side wiper arm.

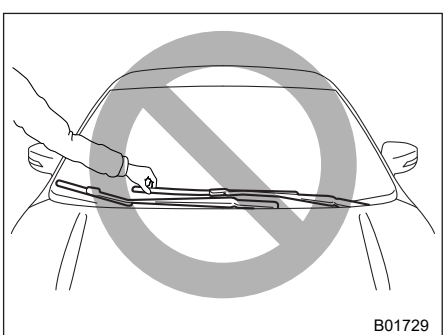
B01729

⚠ CAUTION

Hold the wiper arm when replacing the wiper blade. Holding the wiper blade, may result in blade deformation.

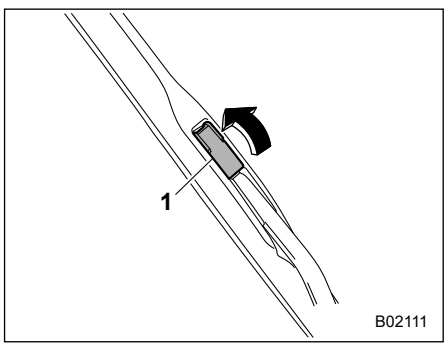

B02111

1) Lock cover

2. Hold the wiper blade connection by hand, open the lock cover to release the lock.

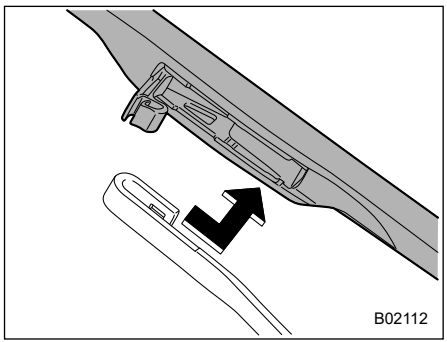
B02112

3. Remove the wiper blade assembly by holding its pivot area and pushing it in the direction shown by the arrow.

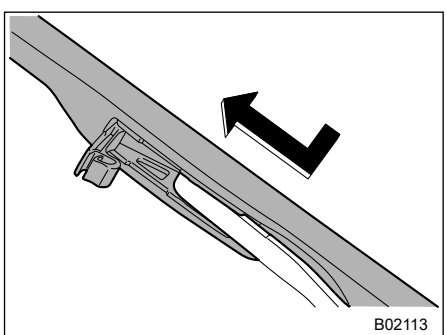
B02113

4. When installing the wiper blade assembly, align it with the wiper arm connection part and then slide it in the opposite direction of removal to install.

– CONTINUED –

After installing the wiper blade assembly, close the lock cover and check that the connection part is locked completely.

5. Hold the wiper arm by hand and slowly lower it in position.

■ Windshield Wiper Blade Rubber

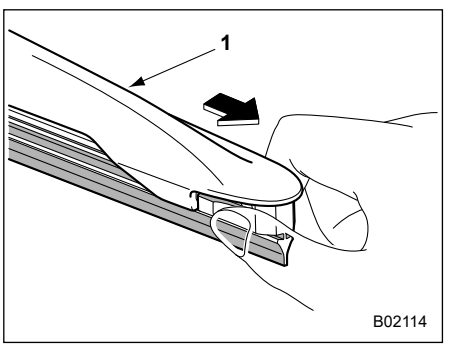

1) Support

1. Grasp the locked end of the blade rubber assembly and pull it firmly until the stoppers on the rubber are free of the support.

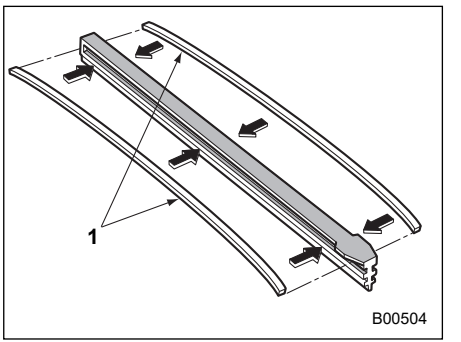

1) Metal spines

2. If the new blade rubber is not provided with two metal spines, remove the metal spines from the old blade rubber and install them in the new blade rubber.

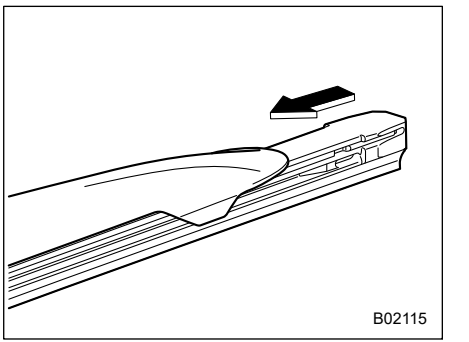

3. Align the claws of the support with the grooves in the rubber and slide the blade rubber assembly into the support until it locks.

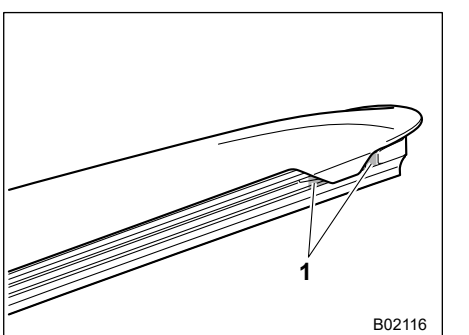

1) Stopper

4. Be sure to position the claws at the end of the support between the stoppers on the rubber as shown. If the rubber is not retained properly, the wiper blade may scratch the windshield.

11-25. Battery

⚠ WARNING

- **Before beginning work on or near any battery, be sure to extinguish all cigarettes, matches, and lighters. Never expose a battery to an open flame or electric sparks. Batteries give off a gas which is highly flammable and explosive.**
- **For safety, in case an explosion does occur, wear eye protection or shield your eyes when working near any battery. Never lean over a battery.**
- **Do not let battery fluid contact eyes, skin, fabrics, or paint because battery fluid is a corrosive acid. If battery fluid gets on your skin or in your eyes, immediately flush the area with water thoroughly. Seek medical help immediately if acid has entered the eyes.**

  If battery fluid is accidentally swallowed, immediately drink a large amount of milk or water, and seek medical attention immediately.
- **To lessen the risk of sparks, remove rings, metal watchbands, and other metal jewelry. Never allow metal tools to contact the positive battery terminal and anything connected to it WHILE you are at the same time in contact with any other metallic portion of the vehicle because a short circuit will result.**
- **Keep everyone including children away from the battery.**
- **Charge the battery in a well-ventilated area.**
- **Battery posts, terminals, and related accessories contain lead and lead compounds, chemicals known to the State of California to cause cancer and reproductive harm. Batteries also contain other chemicals known to the State of California to cause cancer. Wash hands after handling.**

⚠ CAUTION

Never use more than 10 amperes when charging the battery because it will shorten battery life.

– CONTINUED –

It is unnecessary to periodically check the battery fluid level or periodically refill with distilled water.

NOTE

To avoid battery drain, do not use electric power (e.g., lights, wipers, climate control, seat heaters, etc.) for longer than necessary when the engine is off. If using the radio, room lights or other electrical equipment with the engine off, even in the ignition switch is in the "ACC" position, the battery will drain.

11-26. Fuses

⚠ CAUTION

Never replace a fuse with one having a higher rating or with material other than a fuse because serious damage or a fire could result.

NOTE

Fuse rating and using circuit are described on the fuse box cover.

The fuses are designed to melt during an overload to prevent damage to the wiring harness and electrical equipment. The fuses are located in two fuse boxes.

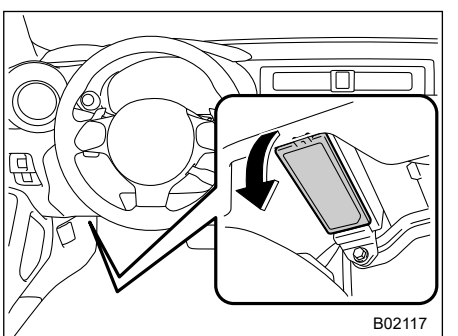

One is located under the instrument panel behind the fuse box cover on the driver's seat side. To remove the cover, pull it out.

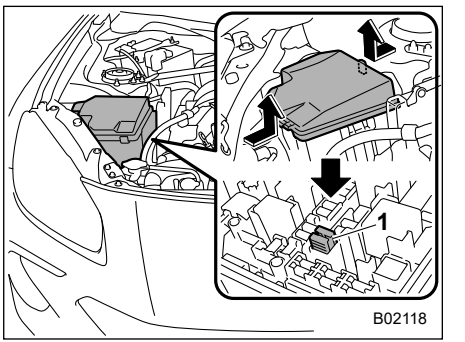

1) Fuse puller

The other one (main fuse box) is housed in the engine compartment. Also, the fuse puller are stored in the fuse box.

Pinch the upper part of the fuse puller when removing it from the main fuse box.

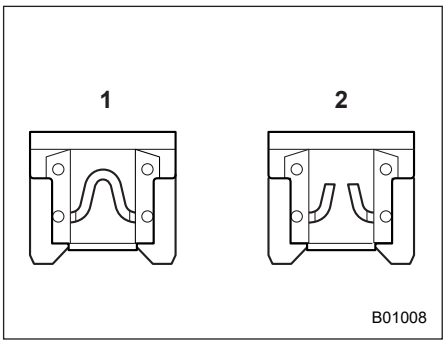

1) Good
2) Blown

If any lights, accessories or other electrical controls do not operate, inspect the corresponding fuse. If a fuse has blown, replace it.

1. Turn the ignition switch to the “OFF” position and turn off all electrical accessories.
2. Remove the fuse box cover.
3. Determine which fuse may be blown. Look at the back side of each fuse box cover.

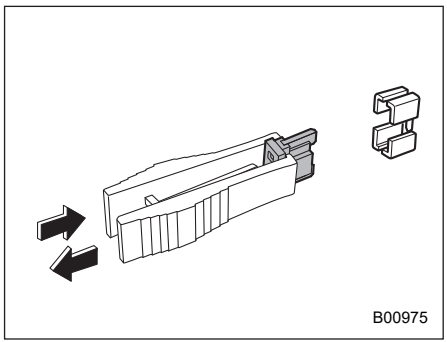

4. Pull out the fuse with the fuse puller.
5. Inspect the fuse. If it has blown, replace it with a spare fuse of the same rating.
6. If the same fuse blows again, this indicates that its system has a problem. Contact your SUBARU dealer for repairs.

11-27. Installation of Accessories

Always consult your SUBARU dealer before installing fog lights or any other electrical equipment in your vehicle. Such accessories may cause the electronic system to malfunction if they are incorrectly installed or if they are not suited for the vehicle. We recommend that you install only genuine SUBARU accessories on your vehicle.

11-28. Replacing Bulbs

⚠ WARNING

Bulbs may become very hot while illuminated. Before replacing bulbs, turn off the lights and wait until the bulbs cool down, Otherwise, there is the risk of sustaining a burn injury.

⚠ CAUTION

- **Before replacing a backup light, stop the engine and allow the exhaust pipes and surrounding parts to cool sufficiently. As the bulbs are near the exhaust pipes, there is a risk of being burned.**
- **Replace any bulb only with a new bulb of the specified wattage. Using a bulb of different wattage could result in a fire. For the specified wattage of each bulb, refer to "Bulb Chart" ☞P395. For replacement, contact your SUBARU dealer.**

■ Headlights

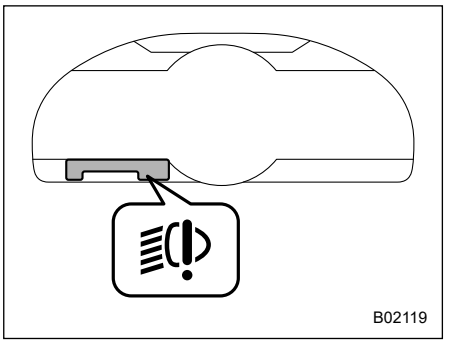

The LED headlight warning light illuminates if the LED headlights malfunction.

Have your vehicle inspected at a SUBARU dealer as soon as possible.

■ Backup Light

NOTE

- **It may be difficult to replace the bulbs. We recommend that you have the bulbs replaced by your SUBARU dealer if necessary.**
- **If a genuine SUBARU accessory has been installed to the rear bumper, check the manual included with the accessory.**

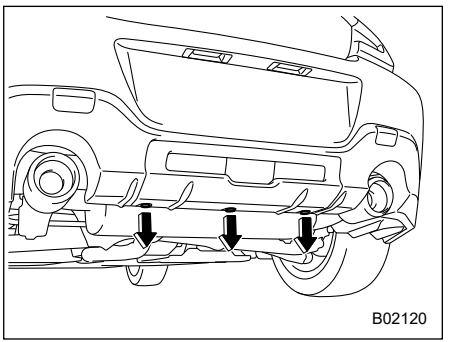

1. Remove the clips.

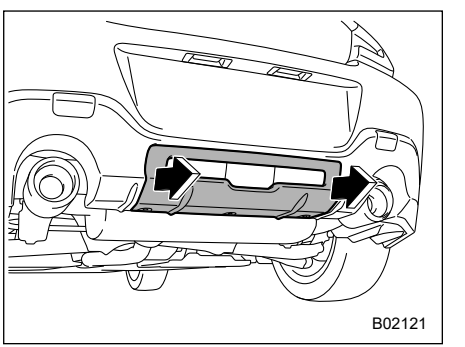

2. Remove the rear bumper cover.

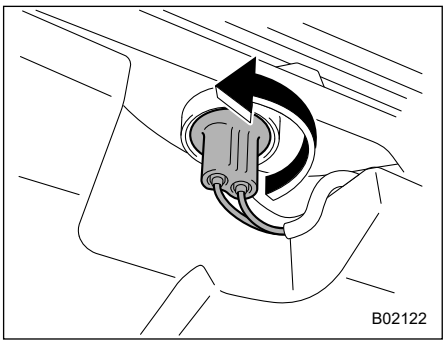

3. Turn the bulb socket counterclockwise and remove it.
4. Pull the bulb out of the bulb socket and replace it with a new one.
5. Install the bulb socket by turning it clockwise.
6. Reconnect the electrical connector.
7. Reinstall the rear bumper cover.

■ Trunk Light

⚠ CAUTION

Replacing the bulb could cause burns since the bulb may be very hot. Have the bulb replaced by your SUBARU dealer.

■ Other Bulbs

It may be difficult to replace the bulbs. We recommend that you have the bulbs replaced by your SUBARU dealer if necessary.

■ Adjusting Headlight Aim

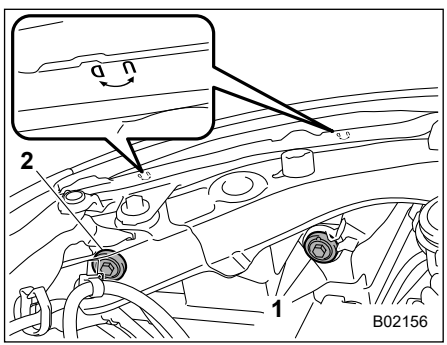

1) Adjustment bolt A
2) Adjustment bolt B

▼ Before checking the headlight aiming

1. Make sure the vehicle has a full tank of gasoline and the area around the headlight is not deformed.
2. Park the vehicle on level ground.
3. Sit in the driver's seat.
4. Bounce the vehicle several times.

▼ Headlight aim adjustment

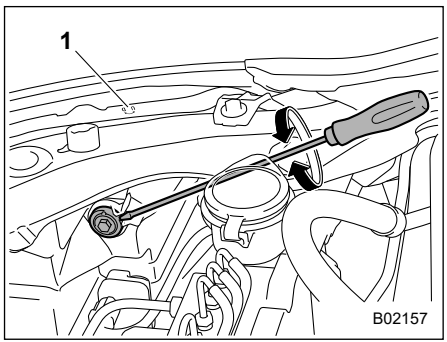

1) Adjustment direction mark

1. Turn the bolt A clockwise or counterclockwise to adjust it. Remember the direction of the rotation and number of rotations.

– CONTINUED –

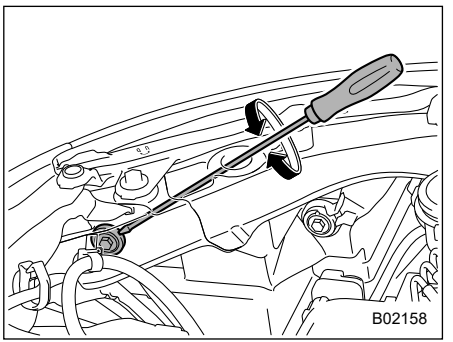

2. Turn bolt B the same number of turns and in the same direction as step 1.

NOTE

• If the headlight aim cannot be adjusted, contact your SUBARU dealer.
• To inspect of the headlight aim position, consult a SUBARU dealer.

11-29. Replacing Battery

The access key fob may be discharged under the following conditions.

- The operation of the keyless access function is unstable
- The operating distance of the remote keyless entry system is unstable
- The transmitter does not operate properly when used within the standard distance

Replace the battery with a new one.

⚠ CAUTION

- **Do not let dust, oil or water get on or in the access key fob/transmitter when replacing battery.**
- **Be careful not to damage the printed circuit board in the access key fob/transmitter when replacing the battery.**
- **Be careful not to allow children to touch the battery and any removed parts; children could swallow them.**
- **There is a danger of an explosion if the battery is incorrectly replaced. Replace only with the same or equivalent type of the battery.**
- **Batteries shall not be exposed to excessive heat such as bright sunlight, fire or the like.**

NOTE

• Replace only with the same or equivalent type of battery recommended by the manufacturer.
• Dispose of used batteries according to the local laws.
• Mount the battery in the correct orientation to prevent fluid leakage. Be careful not to bend the terminals. It may result in a malfunction.
• It is recommended that the battery should be replaced by a SUBARU dealer.
• Use a new battery.
• After replacing the battery, confirm that the access key fob/transmitter functions properly.
• To clear the access key fob battery warning message after replacing the battery, carry the key fob into the vehicle. Then, without depressing the brake pedal, turn the ignition switch to the “ON” position and then to the “OFF” position.
– If the access key fob battery warning message does not disappear even after you replace the battery, it is possible that another

access key fob, other than the one you are holding, is nearby and the warning message is responding to that access key fob. Replace the battery of the second access key fob as well and follow the same procedure.
– Do not perform the warning message clearing procedure while holding two or more access key fobs.

■ Replacing Battery of Access Key Fob

⚠ CAUTION

- **When removing or fitting the access key fob cover, make sure that the plastic part does not come off or become misaligned.**
- **Before replacing the battery, remove any static electricity.**

Battery: Button battery CR2032 or equivalent

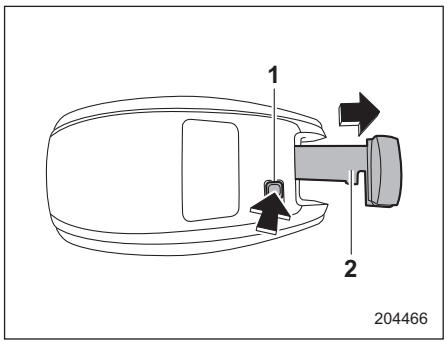

1) Release button
2) Emergency key

1. Take out the emergency key.

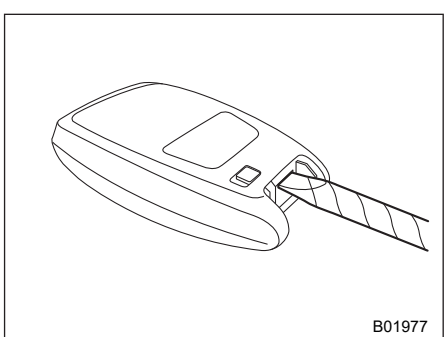

2. Wrap a flat-head screwdriver with vinyl tape or a cloth, and insert it in the gap to remove the cover.

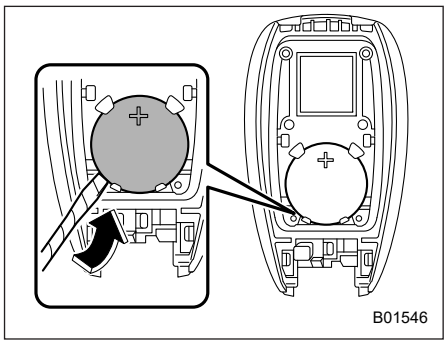

3. Take out the battery using a flat-head screwdriver with vinyl tape or a cloth.

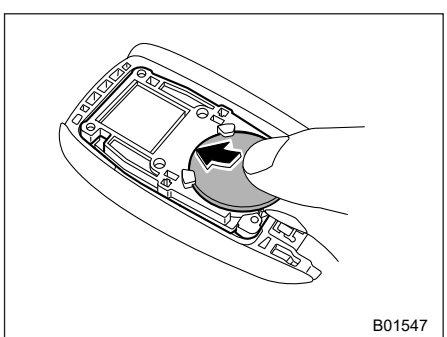

4. Insert a new battery with its positive (+) side facing upward as shown in the figure.

– CONTINUED –

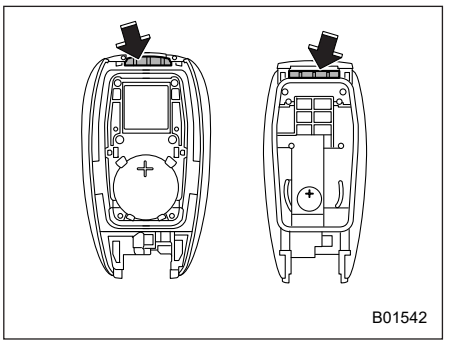

5. Attach the cover to the access key fob by fitting the projections and recesses together.

12-1.Specifications....388
Dimensions....388
Engine....388
Fuel....389
Engine Oil....389
Manual Transmission and Differential Gear Oil....391
Fluids....391
Engine Coolant....392
Electrical System....393
Tires....393
Brake Pedal....393
Brake Disc....394
Brake Pad....394
12-2.Bulb Chart....395
Safety Precautions....395
Bulb Chart....396
12-3.Vehicle Identification....398
12-4.Function Settings....399
Function Settings and Adjustments on the Center Information Display....399
Individual Settings and Adjustments Excluding Center Information Display and Combination Meter Display (Color TFT)....399
Function Settings and Adjustments Performed by a Dealer....399

12-1. Specifications

These specifications are subject to change without notice.

■ Dimensions

in (mm)

Item		Dimensions	
Drive system		RWD	
Transmission type		AT	MT
Overall length		167.9 (4,265)	
Overall width		69.9 (1,775)	
Overall height		51.6 (1,310)	
Wheelbase		101.4 (2,575)	
Tread	Front	59.8 (1,520)	
	Rear	61.0 (1,550)	
Ground clearance*1		5.1 (130)	

*1: Measured with vehicle empty
AT: Automatic transmission
MT: Manual transmission
RWD: Rear Wheel Drive

■ Engine

Engine model	FA24 (2.4 L, DOHC, non-turbo)
Engine type	Horizontally opposed, liquid cooled 4 cylinder, 4-stroke gasoline engine
Displacement cu-in (cc)	146 (2,387)
Bore × Stroke in (mm)	3.70 × 3.39 (94.0 × 86.0)

Engine model	FA24 (2.4 L, DOHC, non-turbo)
Compression ratio	12.5
Firing order	1 – 3 – 2 – 4

■ Fuel

Fuel requirement*1	Unleaded gasoline with 93 AKI (98 RON) or higher
Fuel tank capacity	13.2 US gal (50 liters, 11.0 Imp gal)

*1: For details, refer to "Fuel" ☞P227.

■ Engine Oil

For the checking, adding and replacing procedure or other details, refer to "Engine Oil" ☞P352.

NOTE

The procedure for changing the engine oil and oil filter should be performed by a properly-trained expert. It is recommended that you have this service performed by your SUBARU dealer.

▼ Approved engine oil

Always use the SUBARU approved engine oil. For further details, please contact your SUBARU dealer.
If the approved engine oil is unavailable, use the alternative engine oil described on the next page.

▼ Alternative engine oil

If the SUBARU approved oil is unavailable, the following alternative oil can be used.

NOTE

- **Each quantity indicated is only a guideline. The necessary quantity for replacement may differ slightly depending on the temperature and other factors.**
- **In choosing an oil, you want the proper quality and viscosity, as well as one that will enhance fuel economy. Oils of lower viscosity provide better fuel economy. However, in hot weather, oil of higher viscosity is required to properly lubricate the engine. The following table lists the recommended viscosities and applicable temperatures.**

– CONTINUED –

• **When adding oil, different brands may be used together as long as they are the same API classification and SAE viscosity as those recommended by SUBARU.**

Oil grade		SAE viscosity No. and applicable temperature	Engine oil capacity
 ZOM0754 American Petroleum Institute (API) **SN** Classification oil or an oil of equivalent or better performance (labeled “RESOURCE CONSERVING”)	**or**  ZOM0293 International Lubricant Specification Advisory Committee (ILSAC) **GF-5** oil or an oil of equivalent or better performance (identified by the ILSAC cetification “Starburst” mark)	**0W-20 synthetic** oil is the required oil for optimum engine performance and protection. Conventional oil may be used if synthetic oil is unavailable. *: If 0W-20 synthetic oil is not available, 5W-30 conventional oil may be used if replenishment is needed but should be changed to 0W-20 synthetic oil at the next oil change. 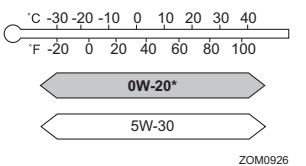 ZOM0926	Adding the oil from low level to full level: 1.1 US qt (1.0 liter, 0.9 Imp qt) Changing the oil: 5.1 US qt (4.8 liters, 4.2 Imp qt) Changing the oil and oil filter: 5.3 US qt (5.0 liters, 4.4 Imp qt)

■ Manual Transmission and Differential Gear Oil

Oil	Manual transmission oil	Differential gear oil
Oil grade	• Manual Transmission Gear Oil LV 75W*3 • API GL-4 SAE 75W*4	• Differential Gear Oil LX*3 • Other gear oil that meets API GL-5 SAE 75W-85 or GL-5 SAE 75W-90 specifications*5
Oil capacity*1	2.3 US qt (2.2 liters, 1.9 Imp qt)	1.22 US qt (1.15 liters, 1.01 Imp qt)
Remarks*2	"Manual Transmission Oil" ☞P359	"Differential Gear Oil" ☞P359

*1: The indicated oil quantity is only a guideline. The necessary quantity for replacement may differ slightly depending on the temperature and other factors. After refilling the gearbox with oil, the oil level should be checked.
*2: For more details about maintenance and service, refer to the indicated section.
*3: The vehicle is filled at the factory.
*4: This type of manual transmission oil can be used. However, using this type of oil will increase fuel consumption.
If oil other than “Manual Transmission Gear Oil LV 75W” is used, the following may be experienced:
- The overall performance and function of the transmission may be adversely affected.
- Rattling noises may occur during idling and fuel consumption may increase.

Never use different brands together.
*5: Using a differential gear oil other than “Differential Gear Oil LX” may cause noise, vibrations and increased fuel consumption. Never use different brands together.

■ Fluids

Fluid	Fluid type*1	Fluid capacity*2	Remarks*3
Automatic Transmission Fluid (AT models)	ATF WS	7.9 US qt (7.5 liters, 6.6 Imp qt)	"Automatic Transmission Fluid" ☞P358
Brake fluid	FMVSS No. 116, DOT 3 or DOT 4 brake fluid	—	"Brake Fluid" ☞P359
Clutch fluid (MT models)	FMVSS No. 116, DOT 3 or DOT 4 brake fluid	—	"Clutch Fluid (MT models)" ☞P360

– CONTINUED –

*1: Use one of the indicated types of fluid.
*2: The indicated fluid quantity is only a guideline. The necessary quantity for replacement may differ slightly depending on the temperature and other factors.
*3: For more details about maintenance and service, refer to the indicated section.

■ Engine Coolant

Vehicle model	Coolant capacity	Coolant type
AT models	8.1 US qt (7.7 liters, 6.8 Imp qt)	SUBARU SUPER COOLANT
MT models	7.8 US qt (7.4 liters, 6.5 Imp qt)	

The indicated coolant quantity is only a guideline. The necessary quantity for replacement may differ slightly depending on the temperature and other factors. For more details about maintenance and service, refer to "Cooling System" ☞P354.

■ Electrical System

Battery type	U.S. spec and Canada spec models	75D23L
	Except U.S. spec and Canada spec models	55D23L
Alternator		12 V-150 A
Spark plugs		ZXE27HBR8 (DENSO)

■ Tires

Tire size		215/45R17 87W	215/40R18 85Y
Wheel size		17 × 7 1/2J	18 × 7 1/2J
Pressure	Front	35 psi (240 kPa, 2.4 kgf/cm^2)	
	Rear		
Wheel nut tightening torque		89 lbf·ft (120 N·m, 12 kgf·m)*1	

*1: This torque is equivalent to applying approximately 88 to 110 lbf (40 to 50 kgf) at the end of the wheel nut wrench. If you have tightened the wheel nuts by yourself, have the tightening torque checked at the nearest automotive service facility as soon as possible. For the wheel nut tightening procedure, refer to "Replacement procedure" ☞P372.

■ Brake Pedal

in (mm)

Pedal clearance	2.91 (74)*
Pedal free play	0.02 - 0.06 (0.5 - 1.5)

*: Minimum value when pedal is operated with a force of 67.4 lbf (300 N, 30.6 kgf) while the engine is running.

– CONTINUED –

■ Brake Disc

If you need information on the usage limit value of brake discs and the method for measuring them, we recommend that you consult your SUBARU dealer.

■ Brake Pad

in (mm)

Brake pad wear limit	Vehicles without Brembo brake		0.06 (1.5)
	Vehicles with Brembo brake	Front	0.06 (1.5)
		Rear	0.09 (2.35)

12-2. Bulb Chart

■ Safety Precautions

⚠ WARNING

Bulbs may become very hot while illuminated. Before replacing bulbs, turn off the lights and wait until the bulbs cool down. Otherwise, there is a risk of sustaining a burn injury.

⚠ CAUTION

Replace any bulb only with a new bulb of the specified wattage. Using a bulb of different wattage could result in a fire.

– CONTINUED –

■ Bulb Chart

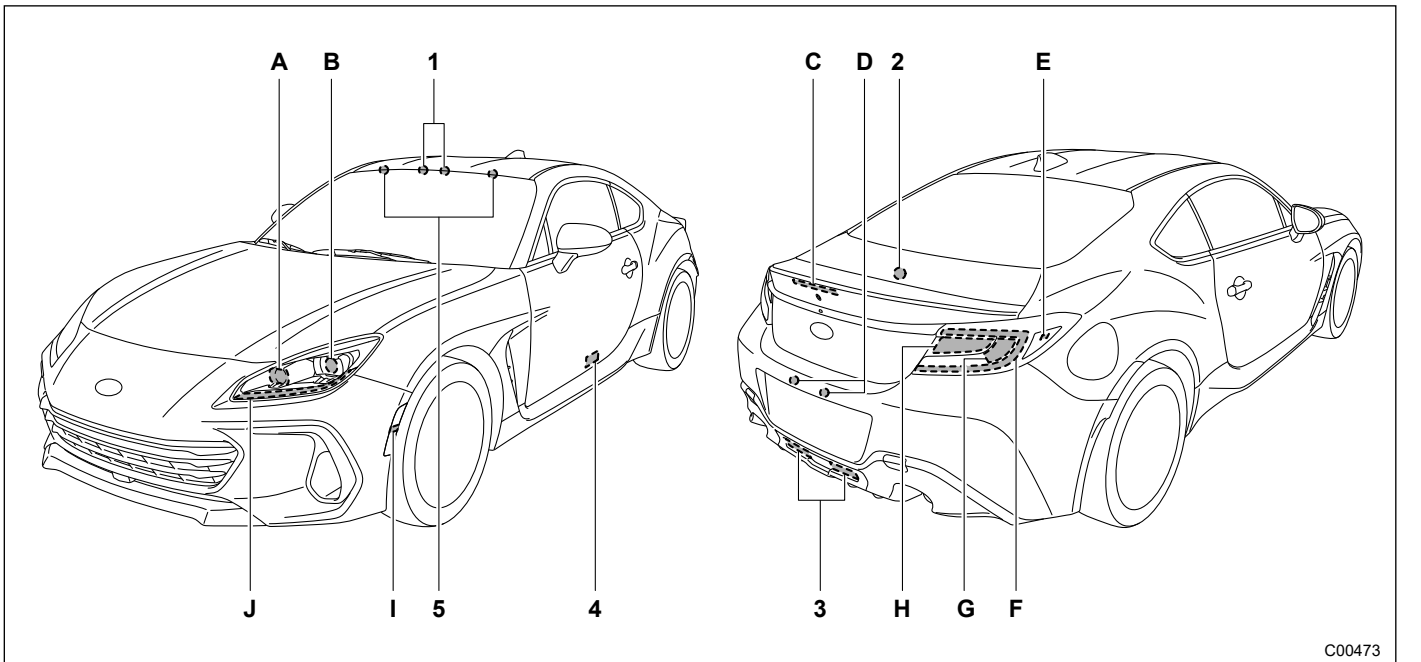

NOTE

Lights indicated by letters are the LED (Light Emitting Diode) type. Consult your SUBARU dealer for replacement.

		Wattage	Bulb No.
1)	Map lights	12 V-8 W	—
2)	Trunk light	12 V-5 W	W5W
3)	Backup lights	12 V-16 W	W16W
4)	Door step lights (If equipped)	12 V-5 W	W5W
5)	Vanity mirror lights (If equipped)	12 V-2 W	—
A)	Front turn signal lights	—	—
B)	Low and high beam headlights	—	—
C)	High-mounted stop light	—	—
D)	License plate lights	—	—
E)	Rear side marker lights	—	—
F)	Tail and stop lights	—	—
G)	Stop lights	—	—
H)	Rear turn signal lights	—	—
I)	Front side marker lights	—	—
J)	Parking lights	—	—
	Daytime running lights	—	—

12-3. Vehicle Identification

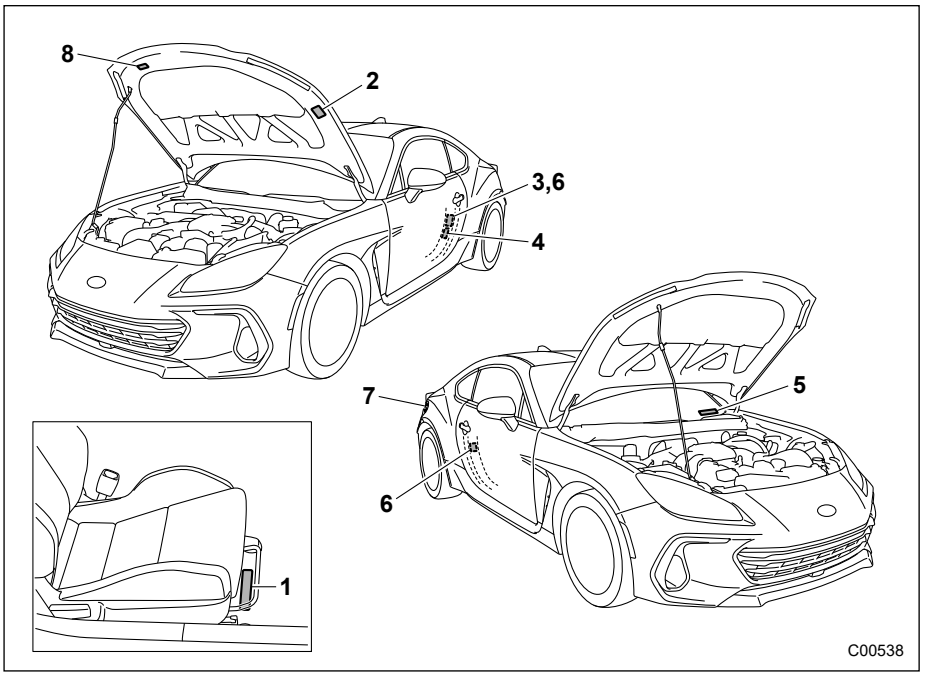

1) Vehicle identification number under the floor carpet of the right-hand front seat
2) Emission control label
3) Certification and bar code label (if equipped)
4) Tire inflation pressure label (vehicle placard)
5) Vehicle identification number label
6) Model number label (if equipped)
7) Fuel label
8) Air conditioner label

12-4. Function Settings

■ Function Settings and Adjustments on the Center Information Display

Setting adjustments can be manually changed within the center information display to meet your personal requirements. Refer to "Center Information Display (CID)" ☞P164.

■ Individual Settings and Adjustments Excluding Center Information Display and Combination Meter Display (Color TFT)

For setting adjustments to the following items, refer to the appropriate page for details.

Item	Function	Available settings	Factory default setting	Page
Alarm system	Alarm system	Operation/Non-operation	Non-operation	118
Remote keyless entry system	Audible signal	Operation/Non-operation	Operation	112

■ Function Settings and Adjustments Performed by a Dealer

Item	Function	Available settings	Factory default setting
Keyless access with push-button	Audible signal volume	Level 1 to 7	Level 5
	Trunk open without key	ON/OFF	ON
Remote keyless entry system	Remote keyless entry system	Operation/Non-operation	Operation
	Panic function	Operation/Non-operation	Operation
	Vehicle finder function	Operation/Non-operation	Operation
Remote trunk open function*1	Operation of trunk opening by access key fob	Non-operation/Pressing twice/Pressing and holding	Pressing and holding
Key lock-in prevention	Key lock-in prevention	Operation/Non-operation	Operation
Auto dimmer cancel	Sensitivity of the operation of the auto dimmer cancel	OFF/Min/Low/Mid/Hi/Max	Mid
Daytime running light system*2	Daytime running light system	Operation/Non-operation	Operation

– CONTINUED –

Item	Function	Available settings	Factory default setting
High beam assist function	High beam assist function	Operation/Non-operation	Operation
Illumination	Operation when the doors are unlocked	Operation/Non-operation	Operation
	Operation after the engine switch is turned off	Operation/Non-operation	Operation
	Interior light illumination upon approach	Operation/Non-operation	Operation
	Interior light illumination	Operation/Non-operation	Operation
Active sound control	Active sound control	Operation/Non-operation	Operation

*1: If equipped
*2: For U.S. spec. models

13-1.For U.S.A.....402
13-2.Tire Information.....402
Tire Labeling 402
Recommended Tire Inflation Pressure.....404
Glossary of Tire Terminology.....405
Tire Care – Maintenance and Safety Practices 410
Vehicle Load Limit – How to Determine 411
Determining Compatibility of Tire and Vehicle Load Capacities.....413
Adverse Safety Consequences of Overloading on Handling and Stopping and on Tires.....413
Steps for Determining Correct Load Limit 413
13-3.Uniform Tire Quality Grading Standards 414
TREADWEAR 414
TRACTION AA, A, B, C 414
TEMPERATURE A, B, C..... 415
13-4.Reporting Safety Defects (USA) 415
13-5.How to Contact Transport Canada in Order to Report a Safety Concern Relating to the Vehicle (Canada) 416
13-6.Notice to Quebec consumers 417
13-7.NEW MEXICO PFAS Protection Act 418

13-1. For U.S.A.

The following information has been compiled according to Code of Federal Regulations “Title 49, Part 575”.

13-2. Tire Information

■ Tire Labeling

Many markings (e.g. Tire size, Tire Identification Number or TIN) are placed on the sidewall of a tire by tire manufacturers. These marking can provide you with useful information on the tire.

▼ Tire size

Your vehicle comes equipped with P-Metric tire size. It is important to understand the sizing system in selecting the proper tire for your vehicles. Here is a brief review of the tire sizing system with a breakdown of its individual elements.

▽ P Metric

With the P-Metric system, Section Width is measured in millimeters. To convert millimeters into inches, divide by 25.4. The Aspect Ratio (Section Height divided by Section Width) helps provide more dimensional information about the tire size.

Example:

P	205	/	60	R	16
(1)	(2)		(3)	(4)	(5)

(1) P = Certain tire type used on light duty vehicles such as passenger cars

(2) Section Width in millimeters

(3) Aspect Ratio (= section height ÷ section width).

(4) R = Radial Construction

(5) Rim diameter in inches

▽ Load and Speed Rating Descriptions

The load and speed rating descriptions will appear following the size designation.

They provide two important facts about the tire. First, the number designation is its load index. Second, the letter designation indicates the tire’s speed rating.

Example:

P 205 / 60 R 16	91	V
Size designation	(6)	(7)

(6) Load Index: A numerical code which specifies the maximum load a tire can carry at the speed indicated by its speed symbol, at maximum inflation pressure.

For example, “91” means 1,356 lbs (615 kg), “90” means 1,323 lbs (600 kg), “89” means 1,279 lbs (580 kg)

⚠ WARNING

Load indices apply only to the tire, not to the vehicle. Putting a load rated tire on any vehicle does not mean the vehicle can be loaded up to the tire’s rated load.

(7) Speed Rating: An alphabetical system describing a tire’s capability to travel at established and predetermined speeds.

For example, “V” means 149 mph (240 km/h)

⚠ WARNING

- **Speed ratings apply only to the tire, not to the vehicle. Putting a speed rated tire on any vehicle does not mean the vehicle can be operated at the tire’s rated speed.**
- **The speed rating is void if the tires are worn out, damaged, repaired, retreaded, or otherwise altered from their original condition. If tires are repaired, retreaded, or otherwise altered, they may not be suitable for original equipment tire designed loads and speeds.**

▼ Tire Identification Number (TIN)

Tire Identification Number (TIN) is marked on the intended outboard sidewall. Here is a brief review of the TIN with a breakdown of its individual elements.

DOT XXX XXXXXX XXXX
(1) (2) (3) (4)

(1) DOT symbol*
(2) Plant Code
(3) Manufacturer’s Code
(4) Date of Manufacture

The first two figures identify the week, starting with “01” to represent the first full week of the calendar year; the second two figures represent the year. For example, 0101 means the 1st week of 2001.

*: The DOT symbol certifies that the tire conforms to applicable Federal Motor Vehicle Safety Standards.

– CONTINUED –

▼ Other markings

The following markings are also placed on the sidewall.

▽ Maximum permissible inflation pressure

The maximum cold inflation pressure to which this tire may be inflated. For example, “350 kPa (51 PSI) MAX. PRESS”

▽ Maximum load rating

The load rating at the maximum permissible weight load for this tire. For example, “MAX. LOAD 615 kg (1,356 LBS) @ 350 kPa (51 PSI) MAX. PRESS.”

⚠ WARNING

Maximum load rating applies only to the tire, not to the vehicle. Putting a load rated tire on any vehicle does not mean the vehicle can be loaded up to the tire’s rated load.

▽ Construction type

Applicable construction of this tire.

For example, “TUBELESS STEEL BELTED RADIAL”

▽ Construction

The generic name of each cord material used in the plies (both sidewall and tread area) of this tire.

For example, “PLIES: TREAD 2 STEEL + 2 POLYESTER + 1 NYLON SIDEWALL 2 POLYESTER”

▽ Uniform Tire Quality Grading (UTQG)

For details, refer to "Uniform Tire Quality Grading Standards" ☞P414.

■ Recommended Tire Inflation Pressure

▼ Recommended cold tire inflation pressure

For the recommended cold tire inflation pressure for your vehicle’s tires, refer to "Tires" ☞P393.

▼ Vehicle placard

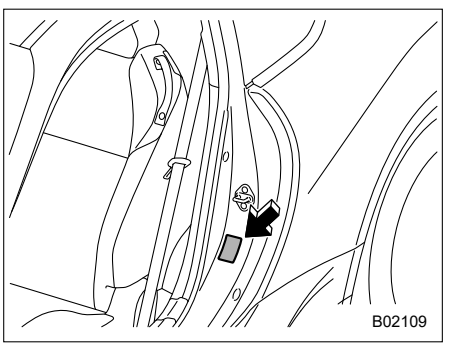

The vehicle placard is affixed to the driver’s side B-pillar.

Example:

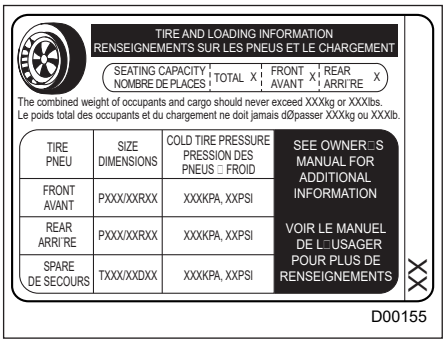

The vehicle placard shows original tire size, recommended cold tire inflation pressure on each tire at maximum loaded vehicle weight, seating capacity and loading information.

▼ Adverse safety consequences of under-inflation

Driving at high speeds with excessively low tire pressures can cause the tires to flex severely and to rapidly become hot. A sharp increase in temperature could cause tread separation, and failure of the tire(s). Possible resulting loss of vehicle control could lead to an accident.

▼ Measuring and adjusting air pressure to achieve proper inflation

Check and, if necessary, adjust the pressure of each tire (including the spare) at least once a month and before any long journey. Check the tire pressures when the tires are cold. Use a pressure gauge to adjust the tire pressures to the specific values. Driving even a short distance warms up the tires and increases the tire pressures. Also, the tire pressures are affected by the outside temperature. It is best to check tire pressure outdoors before driving the vehicle. When a tire becomes warm, the air inside it expands, causing the tire pressure to increase. Be careful not to mistakenly release air from a warm tire to reduce its pressure.

■ Glossary of Tire Terminology

- **Accessory weight**

The combined weight (in excess of those standard items which may be replaced) of automatic transmission, power steering, power brakes, power windows, power seats, radio, and heater, to the extent that these items are available as factory-installed equipment (whether installed or not).

- **Bead**

The part of the tire that is made of steel wires, wrapped or reinforced by ply cords and that is shaped to fit the rim.

- **Bead separation**

A breakdown of the bond between components in the bead.

- **Bias ply tire**

A pneumatic tire in which the ply cords that extend to the beads are laid at alternate angles substantially less than 90 degrees to the centerline of the tread.

– CONTINUED –

- **Carcass**

The tire structure, except tread and sidewall rubber which, when inflated, bears the load.

- **Chunking**

The breaking away of pieces of the tread or sidewall.

- **Cold tire pressure**

The pressure in a tire that has been driven less than 1 mile or has been standing for three hours or more.

- **Cord**

The strands forming the plies in the tire.

- **Cord separation**

The parting of cords from adjacent rubber compounds.

- **Cracking**

Any parting within the tread, sidewall, or inner liner of the tire extending to cord material.

- **Curb weight**

The weight of a motor vehicle with standard equipment including the maximum capacity of fuel, oil and coolant, and if so equipped, air conditioning and additional weight optional engine.

- **Extra load tire**

A tire designed to operate at higher loads and higher inflation pressure than the corresponding standard tire.

- **Groove**

The space between two adjacent tread ribs.

- **Innerliner**

The layer(s) forming the inside surface of a tubeless tire that contains the inflating medium within the tire.

- **Innerliner separation**

The parting of the innerliner from cord material in the carcass.

- **Intended outboard sidewall**

(1) The sidewall that contains a whitewall, bears white lettering or bears manufacturer, brand, and/or model name molding that is higher or deeper than the same molding on the other sidewall of the tire, or

(2) The outward facing sidewall of an asymmetrical tire that has a particular side that must always face outward when mounting on a vehicle.

- **Light truck (LT) tire**

A tire designated by its manufacturer as primarily intended for use on lightweight trucks or multipurpose passenger vehicles.

- **Load rating**

The maximum load that a tire is rated to carry for a given inflation pressure.

- **Maximum inflation pressure**

The maximum cold inflation pressure to which a tire may be inflated.

- **Maximum load rating**

The load rating for a tire at the maximum permissible inflation pressure for that tire.

- **Maximum loaded vehicle weight**

The sum of:

(a) Curb weight
(b) Accessory weight
(c) Vehicle capacity weight
(d) Production options weight

- **Maximum permissible inflation pressure**

The maximum cold inflation pressure to which a tire may be inflated.

- **Measuring rim**

The rim on which a tire is fitted for physical dimension requirements.

- **Normal occupant weight**

150 lbs (68 kg) times the number of occupants specified in the second column of Table 1 that is appended to the end of this section.

- **Occupant distribution**

Distribution of occupants in a vehicle as specified in the third column of Table 1 that is appended to the end of this section.

- **Open splice**

Any parting at any junction of tread, sidewall, or innerliner that extends to cord material.

- **Outer diameter**

The overall diameter of an inflated new tire.

- **Overall width**

The linear distance between the exteriors of the sidewalls of an inflated tire, including elevations due to labeling, decorations, or protective bands or ribs.

- **Passenger car tire**

A tire intended for use on passenger cars, multipurpose passenger vehicles, and trucks, that have a gross vehicle weight rating (GVWR) of 10,000 lbs (4,535 kg) or less.

- **Ply**

A layer of rubber-coated parallel cords.

- **Ply separation**

A parting of rubber compound between adjacent plies.

- **Pneumatic tire**

A mechanical device made of rubber, chemicals, fabric and steel or other materials, that, when mounted on an automotive wheel, provides the traction and contains the gas or fluid that sustains the load.

- **Production options weight**

The combined weight of those installed regular production options weighing over 5.1 lbs (2.3 kg) in excess of those standard items which they replace, not previously considered in curb weight or accessory weight, including heavy duty brakes, ride levelers, roof rack, heavy duty battery, and special trim.

– CONTINUED –

- **Radial ply tire**

A pneumatic tire in which the ply cords that extend to the beads are laid at substantially 90 degrees to the centerline of the tread.

- **Recommended inflation pressure**

The cold inflation pressure recommended by a vehicle manufacturer.

- **Reinforced tire**

A tire designed to operate at higher loads and at higher inflation pressures than the corresponding standard tire.

- **Rim**

A metal support for a tire or a tire and tube assembly upon which the tire beads are seated.

- **Rim diameter**

Nominal diameter of the bead seat.

- **Rim size designation**

Rim diameter and width.

- **Rim type designation**

The industry of manufacturer's designation for a rim by style or code.

- **Rim width**

Nominal distance between rim flanges.

- **Section width**

The linear distance between the exteriors of the sidewalls of an inflated tire, excluding elevations due to labeling, decoration, or protective bands.

- **Sidewall**

That portion of a tire between the tread and bead.

- **Sidewall separation**

The parting of the rubber compound from the cord material in the sidewall.

- **Snow tire**

A tire that attains a traction index equal to or greater than 110, compared to the ASTM E1136-93 Standard Reference Test Tire, when using the snow traction test as described in ASTM F-1805-00, Standard Test Method for Single Wheel Driving Traction in a Straight Line on Snow-and Ice-Covered Surfaces, and that is marked with an Alpine Symbol "" on at least one sidewall.

- **Test rim**

The rim on which a tire is fitted for testing, and it may be any rim listed as appropriate for use with that tire.

- **Tread**

That portion of a tire that comes into contact with the road.

- **Tread rib**

A tread section running circumferentially around a tire.

- **Tread separation**

Pulling away of the tread from the tire carcass.

- **Treadwear indicators (TWI)**

The projections within the principal grooves designed to give a visual indication of the degrees of wear of the tread.

- **Vehicle capacity weight**

The rated cargo and luggage load plus 150 lbs (68 kg) times the vehicle's designated seating capacity.

- **Vehicle maximum load on the tire**

Load on an individual tire that is determined by distributing to each axle its share of the maximum loaded vehicle weight and dividing by two.

- **Vehicle normal load on the tire**

Load on an individual tire that is determined by distributing to each axle its share of the curb weight, accessory weight, and normal occupant weight (distributed in accordance with Table 1 that is appended to the end of this section) and dividing by 2.

- **Wheel-holding fixture**

The fixture used to hold the wheel and tire assembly securely during testing.

– CONTINUED –

Table 1 — Occupant loading and distribution for vehicle normal load for various designated seating capacities

Designated seating capacity, number of occupants	Vehicle normal load, number of occupants	Occupant distribution in a normally loaded vehicle
2 through 4	2	2 in front.
5 through 10	3	2 in front, 1 in second seat.
11 through 15	5	2 in front, 1 in second seat, 1 in third seat, 1 in fourth seat.
16 through 22	7	2 in front, 2 in second seat, 2 in third seat, 1 in fourth seat.

■ Tire Care – Maintenance and Safety Practices

- Check on a daily basis that the tires are free from serious damage, nails, and stones. At the same time, check the tires for abnormal wear.
- Inspect the tire tread regularly and replace the tires before their tread wear indicators become visible. When a tire's tread wear indicator becomes visible, the tire is worn beyond the acceptable limit and must be replaced immediately. With a tire in this condition, driving at even low speeds in wet weather can cause the vehicle to hydroplane. Possible resulting loss of vehicle control can lead to an accident.
- To maximize the life of each tire and ensure that the tires wear uniformly, it is best to rotate the tires every 6,000 miles (10,000 km). For information about tire rotation, refer to "Rotational Direction of Tires" ☞P370. Replace any damaged or unevenly worn tire at the time of rotation. After tire rotation, adjust

the tire pressures and make sure the wheel nuts are correctly tightened. For information about the tightening torque and tightening sequence for the wheel nuts, refer to "Flat Tires" ☞P311.

■ Vehicle Load Limit – How to Determine

The load capacity of your vehicle is determined by weight, not by available cargo space. The load limit of your vehicle is shown on the vehicle placard attached to the driver's side B-pillar. Locate the statement "The combined weight of occupants and cargo should never exceed XXX kg or XXX lbs" on your vehicle's placard.

The vehicle placard also shows seating capacity of your vehicle.

The total load capacity includes the total weight of driver and all passengers and their belongings, any cargo, any optional equipment such as a roof rack or bike carrier, etc. Therefore cargo capacity can be calculated by the following method.

Cargo capacity = Load limit − (total weight of occupants + total weight of optional equipment)

For information about vehicle loading, refer to "Loading Your Vehicle" ☞P306.

⚠ CAUTION

Your vehicle is neither designed nor intended to be used for trailer towing. Therefore, never tow a trailer with your vehicle.

▼ Calculating total and load capacities varying seating configurations

Calculate the available load capacity as shown in the following examples:

Example 1

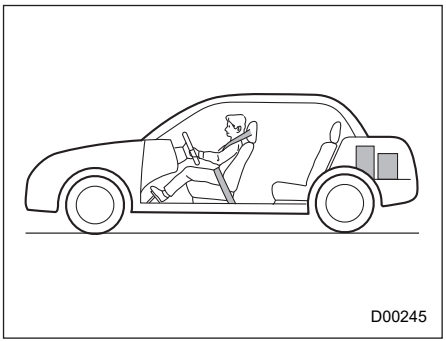

Vehicle capacity weight of the vehicle is 800 lbs (363 kg), which is indicated on the vehicle placard with the statement "The combined weight of occupants and cargo should never exceed 363 kg or 800 lbs".

For example, if the vehicle has one occupant weighing 154 lbs (70 kg)

– CONTINUED –

plus cargo weighing 551 lbs (250 kg).

1. Calculate the total weight.

Total weight

= 154 lbs (70 kg) (Occupant) + 551 lbs (250 kg) (Cargo)

= **705 lbs (320 kg)**

2. Calculate the available load capacity by subtracting the total weight from the vehicle capacity weight of 800 lbs (363 kg).

Available Load Capacity

= 800 lbs (363 kg) (Vehicle capacity weight) – 705 lbs (320 kg) (Total weight)

= **95 lbs (43 kg)**

3. The result of step 2 shows that a further 95 lbs (43 kg) of cargo can be carried.

Example 2

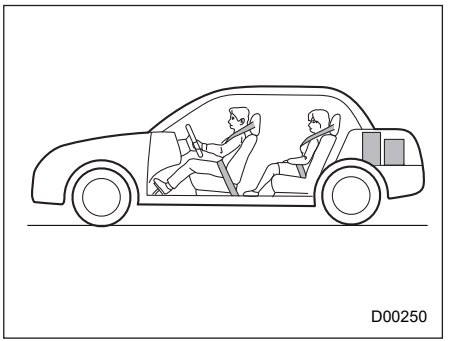

For example, if a person weighing 176 lbs (80 kg) now enters the same vehicle (bringing the number of occupants to two), the calculations are as follows:

1. Calculate the total weight.

Total weight

= 154 lbs (70 kg) (Occupant) + 176 lbs (80 kg)

+ 551 lbs (250 kg) (Cargo)

= **881 lbs (400 kg)**

2. Calculate the available load capacity.

Available Load Capacity

= 800 lbs (363 kg) (Vehicle capacity weight) – 881 lbs (400 kg) (Total weight)

= **–81 lbs (–37 kg)**

3. The total weight now exceeds the capacity weight by 81 lbs (37 kg), so the cargo weight must be reduced by 81 lbs (37 kg) or more.

■ Determining Compatibility of Tire and Vehicle Load Capacities

The sum of four tires' maximum load ratings must exceed the maximum loaded vehicle weight ("GVWR"). In addition, sum of the maximum load ratings of two front tires and of two rear tires must exceed each axle's maximum loaded capacity ("GVWR"). Original equipment tires are designed to fulfill those conditions.

The maximum loaded vehicle weight is referred to Gross Vehicle Weight Rating (GVWR). And each axle's maximum loaded capacity is referred to Gross Axle Weight Rating (GAWR). The GVWR and each axle's GAWR are shown on the vehicle certification label affixed to the driver's door.

The GVWR and front and rear GAWRs are determined by not only the maximum load rating of tires but also loaded capacities of the vehicle's suspension, axles and other parts of the body.

Therefore, this means that the vehicle cannot necessarily be loaded up to the tire's maximum load rating on the tire sidewall.

■ Adverse Safety Consequences of Overloading on Handling and Stopping and on Tires

Overloading could affect vehicle handling, stopping distance, vehicle and tire as shown in the following. This could lead to an accident and possibly result in severe personal injury.

- Vehicle stability will deteriorate.
- Heavy and/or high-mounted loads could increase the risk of rollover.
- Stopping distance will increase.
- Brakes could overheat and fail.
- Suspension, bearings, axles and other parts of the body could break or experience accelerated wear that will shorten vehicle life.
- Tires could fail.
- Tread separation could occur.
- Tire could separate from its rim.

■ Steps for Determining Correct Load Limit

1. Locate the statement "The combined weight of occupants and cargo should never exceed XXX kg or XXX lbs." on your vehicle's placard.
2. Determine the combined weight of the driver and passengers that will be riding in your vehicle.
3. Subtract the combined weight of the driver and passengers from XXX kg or XXX lbs.
4. The resulting figure equals the available amount of cargo and luggage load capacity. For example, if the "XXX" amount equals 1,400 lbs (635 kg) and there will be five 150 lbs (68 kg) passengers in your vehicle, the amount of available cargo and luggage load capacity is 650 lbs (1,400 − 750 (5 × 150) = 650 lbs).
5. Determine the combined weight of luggage and cargo being loaded

– CONTINUED –

on the vehicle. That weight may not safely exceed the available cargo and luggage load capacity calculated in Step 4.

13-3. Uniform Tire Quality Grading Standards

This information indicates the relative performance of passenger car tires in the area of treadwear, traction, and temperature resistance. This is to aid the consumer in making an informed choice in the purchase of tires.

Quality grades can be found where applicable on the tire sidewall between tread shoulder and maximum section width. For example:

TREADWEAR 200 TRACTION AA TEMPERATURE A

The quality grades apply to new pneumatic tires for use on passenger cars. However, they do not apply to deep tread, winter type snow tires, space-saver or temporary use spare tires, tires with nominal rim diameters of 12 inches or less, or to some limited production tires.

All passenger car tires must conform to Federal Safety Requirements in addition to these grades.

■ TREADWEAR

The treadwear grade is a comparative rating based on the wear rate of the tire when tested under controlled conditions on a specified government test course.

For example, a tire graded 150 would wear one and one-half (1-1/2) times as well on the government course as a tire graded 100. The relative performance of tires depends upon the actual conditions of their use, however, and may depart significantly from the norm due to variations in driving habits, service practices and differences in road characteristics and climate.

■ TRACTION AA, A, B, C

The traction grades, from highest to lowest, are AA, A, B and C. Those grades represent the tire's ability to stop on wet pavement as measured under controlled conditions on

specified government test surfaces of asphalt and concrete. A tire marked C may have poor traction performance.

⚠ WARNING

The traction grade assigned to this tire is based on straight-ahead braking traction tests, and does not include acceleration, cornering, hydroplaning, or peak traction characteristics.

■ TEMPERATURE A, B, C

The temperature grades are A (the highest), B, and C, representing the tire's resistance to the generation of heat and its ability to dissipate heat when tested under controlled conditions on a specified indoor laboratory test wheel. Sustained high temperature can cause the material of the tire to degenerate and reduce tire life, and excessive temperature can lead to sudden tire failure. The grade C corresponds to a level of performance which all passenger car tires must meet under the Federal Motor Vehicle Safety Standard No. 109. Grades B and A represent higher levels of performance on the laboratory test wheel than the minimum required by law.

⚠ WARNING

The temperature grade for this tire is established for a tire that is properly inflated and not overloaded. Excessive speed, underinflation, or excessive loading, either separately or in combination, can cause heat buildup and possible tire failure.

13-4. Reporting Safety Defects (USA)

If you believe that your vehicle has a defect which could cause a crash or could cause injury or death, you should immediately inform the National Highway Traffic Safety Administration (NHTSA) in addition to notifying Subaru of America, Inc.

If NHTSA receives similar complaints, it may open an investigation, and if it finds that a safety defect exists in a group of vehicles, it may order a recall and remedy campaign. However, NHTSA cannot become involved in individual problems between you, your dealer, or Subaru of America, Inc. To contact NHTSA, you may call the Vehicle Safety Hotline toll-free at 1-888-327-4236 (TTY: 1-800-424-9153); go to http://www.safercar.gov; or write to: Administrator, NHTSA, 1200 New Jersey Avenue, SE, West Building, Washington, DC 20590. You can also obtain other information about

– CONTINUED –

motor vehicle safety from http://www.safercar.gov.

13-5. How to Contact Transport Canada in Order to Report a Safety Concern Relating to the Vehicle (Canada)

Transport Canada - ASFAD
330 Sparks Street
Ottawa, ON K1A 0N5

Telephone: 819-994-3328
(Ottawa-Gatineau area or internationally)
Toll free: 1-800-333-0510 (in Canada)

Online:
http://www.tc.gc.ca/recalls

Transports Canada - ASFAD
330, rue Sparks
Ottawa (Ontario) K1A 0N5

Téléphone: 819-994-3328
(dans la région de Ottawa-Gatineau et à l'extérieur du pays)
Sans frais: 1-800-333-0510 (au Canada)

Internet:
http://www.tc.gc.ca/rappels D01001

13-6. Notice to Quebec consumers

IMPORTANT NOTICE (For Quebec only)	
Replacement Parts ☒	**We do not provide and in no way guarantee** the availability of vehicle replacement parts under Section 39, paragraph 3 of the Consumer Protection Act.
Repair Services ☒	**We do not provide and in no way guarantee** the availability of vehicle repair services under Section 39, paragraph 3 of the Consumer Protection Act.
Maintenance & Repair Information ☒	**We do not provide and in no way guarantee** the availability of vehicle maintenance and repair information under Section 39, paragraph 3 of the Consumer Protection Act.
This information is also available on the manufacturer's website: www.subaru.ca	

AVIS IMPORTANT (Pour le Québec seulement)	
Pièces de rechange ☒	**NOUS NE FOURNISSONS PAS ET NE GARANTISSONS AUCUNEMENT** la disponibilité des pièces de rechange de véhicules sous l'article 39 alinéa 3 de la Loi sur la protection du Consommateur.
Services de réparation ☒	**NOUS NE FOURNISSONS PAS ET NE GARANTISSONS AUCUNEMENT** la disponibilité des services de réparation de véhicules sous l'article 39 alinéa 3 de la Loi sur la protection du Consommateur.
Renseignements d'entretien et de réparation ☒	**NOUS NE FOURNISSONS PAS ET NE GARANTISSONS AUCUNEMENT** la disponibilité des renseignements d'entretien et de réparation de véhicules sous l'article 39 alinéa 3 de la Loi sur la protection du Consommateur.
Ces informations sont également disponibles sur le site web du fabricant : www.subaru.ca	

D01459

13-7. NEW MEXICO PFAS Protection Act



D01461

A

Abbreviation P4
ABS (Anti-lock Brake System) P251
  Warning light....P144
Access key
  Warning indicator.... P147, P148
Access key fob
  Warning light....P148
Accessories....P381
Accessory power outlet P219
Active sound control....P247
Air cleaner element P356
Air conditioner
  Automatic climate control P204
  Manual climate control system P205
Air filtration system....P209
Airflow mode selection P205
Alarm system P117
All season tires....P364
Alloy wheel P375
  Cleaning P337
Antenna
  Roof antenna P214
Anti-lock Brake System (ABS) P251
Arming the system P117
Ashtray P221
AT OIL TEMP warning light....P142
Audio
  Antenna system P214
  Set P214
Audio system-linked display P160
Auto dimmer cancel function P135
Auto on/off headlights.... P178
  Sensor P180
Auto-dimming mirror/compass P190
Automatic
  Transmission P240
Automatic climate control operation P204
Automatic headlight beam leveler P186
  Warning light.... P153
Automatic Locking Retractor/Emergency Locking Retractor (ALR/ELR).... P42
Automatic transmission
  Oil temperature warning light (AT OIL TEMP) P142
Average vehicle speed P157

B

Battery
  Drainage prevention function.... P115
  Jump starting P320
  Replacement (access key fob) P385
  Replacement (keyless access with push-button start system) P385
  Vehicle battery P379
Blind Spot Detection (BSD) P272
Booster seat P56

Bottle holder P219
Brake
Assist P249
Booster P249, P361
Disc P394
Fluid P359, P391
Pad P362
Parking P261, P363
Pedal P362
System P249
Brake pedal
Free play P362
Reserve distance P362
Brake system P249
Warning light P144
Braking P249
Tips P249
Breaking-in of new brake pads P363
BSD/RCTA P270
Approach indicator light/warning buzzer P275
OFF indicator P276
OFF switch P277
Warning indicator P154, P277
Warning light P277
Bulb
Chart P395
Replacing P382

C

Camera
Rear view camera P266
Catalytic converter P299
Center console P218
Center information display (CID) P164
Cleaning P340
Changing
Coolant P356
Flat tire P311
Oil and oil filter P353
Charge warning light P141
CHECK ENGINE warning light/Malfunction indicator light P140
Checking
Brake pedal free play P362
Brake pedal reserve distance P362
Clutch function P362
Clutch pedal free play P362
Coolant level P355
Fluid level (brake fluid) P359
Fluid level (clutch fluid) P360
Fluid level (washer fluid) P375
Oil level (engine oil) P352
Child restraint systems P48
Installation of a booster seat P56
Installation with ALR/ELR seatbelt P53
Lower and top tether anchorages P57
Top tether anchorages P61
Child safety P6

Chime
Light....P178
Seatbelt....P135
Cleaning
Alloy wheels....P337
Center information display....P340
Interior....P339
Ventilation grille....P208
Climate control system....P202
Automatic....P204
Manual....P205
Clock....P176
Clutch
Fluid....P360, P391
Pedal....P362
Combination meter display (color TFT)....P155
Audio system-linked display....P160
Drive information....P157
Driving support system setting display....P161
Exclusive content for SUBARU BRZ....P158
Navigation system-linked display....P160
Settings display....P161
Warning message display....P163
Compass....P190
Console....P218
Control switch light....P178
Coolant....P355, P392
Cooling system....P354
Corrosion protection....P338
Cup holder....P218

D

Daytime running light (DRL) system....P184
Defogger....P189
Defrosting....P207
Differential gear oil....P359, P391
Dimensions....P388
Disc brake pad wear warning indicators....P250
Door
Door unlock selection function....P102
Locks....P113
Open indicator....P145
Double trip meter....P132
Drive belt....P358
Drive information....P157
Driving
Car phone/cell phone....P9
Drinking....P7
Drugs....P8
Foreign countries....P300
Pets....P9
Snowy and icy roads....P303
Tips....P240, P245, P298
Tired or sleepy....P8
Winter....P302
Driving distance....P157
Driving mode select switch....P246
Driving range....P157

Driving support system setting display P161
Driving time P157

E

Electrical system P393
Electronic Brake Force Distribution (EBD) system P252
Warning P145
Emergency Locking Retractor (ELR) P42
Engine
Compartment overview P351
Coolant P355, P392
Exhaust gas (carbon monoxide) P7, P298
Hood P349
Hood release knob P349
Oil P352, P389
Overheating P323
Start & stopping P233
Engine oil temperature gauge P157
Event data recorder P12
Exclusive content for SUBARU BRZ P158
Exterior care P336

F

Flat tire P311
Flat tire repair kit P313
Technical data of air compressor P319
Floor mat P222
Fluid level
Automatic transmission P358
Brake P359
Clutch P360
Front
Passenger's frontal airbag ON and OFF P74
Seatbelt pretensioners P46
Front seats P32
Forward and backward adjustment P35
Head restraint adjustment P36
Manual seat P35
Reclining P35
Seat heater P37
Seat height adjustment (driver's seat) P35
Fuel P227
Economy hints P298
Filler door and cap P228
Filler lid and cap P228
Gauge P133
Requirements P227, P389
Tank capacity P389
Fuel consumption
Average fuel consumption P157
Current fuel consumption P157
Fuses P380

G

Gasoline P227
GAWR (Gross Axle Weight Rating) P307
G-force P158
G-force (peak hold function) P158

Glove box P218
GVWR (Gross Vehicle Weight Rating) P307

H
Hazard warning flasher P131, P310
Head restraint adjustment P36
Headlight
Aim adjustment P383
Beam leveler P186
Bulb replacement P382
Control switch P178
Flasher P181
Indicator light P154
Welcome lighting function P179
High Beam Assist
Function P181
Indicator light P153
High beam indicator light P153
High/low beam change (dimmer) P180
Hill start assist P263
Indicator light P154
To activate/deactivate P264
HomeLink® P190
Hook
Towing and tie-down P324
Horn P199
Hose and connections P354

I
Icy road surface warning light P154
Illumination brightness control P134
Immobilizer P110
Indicator light (security indicator light) P152
Indicator light
BSD/RCTA OFF P154
BSD/RCTA warning P154
Door open P145
Drive mode P152
Front passenger's frontal airbag ON and OFF P74, P139
Headlight P154
High beam P153
High Beam Assist P153
Hill start assist P154
Malfunction P140
RAB OFF P155
REV P134
Security P152
Select lever/Gear position P153
Steering Responsive Headlight OFF P154
TRAC OFF P146
Turn signal P153
Vehicle Stability Control (VSC) OFF P147
Vehicle Stability Control (VSC) operation P146, P147
Inside mirror P190
Interior lights P216
Internal trunk lid release handle P123

J

Jack and jack handle P310
Jack-up point P372
Jump starting P320

K

Key P96
  Replacement P110
Keyless access with push-button start system P96
  Disabling keyless access functions P105
  Locking and unlocking doors P100
  Opening trunk P100
  Warning chimes and warning indicator P108, P147
  When access key fob does not operate properly P329

L

Lane Change Assist (LCA) P272
Leather seat materials P340
LED headlight warning light P153, P382
LED headlights P382
Light
  Backup P382
  Control switch P178
  Daytime running P184
  Map P216
  Trunk P383
  Turn signal P186
Loading your vehicle P306
Low fuel warning light P145
Low tire pressure warning light P142
Lower anchors and tethers for children (LATCH) P57
Lower and top tether anchorages P57

M

Maintenance
  Precautions P345
  Schedule P345
  Seatbelt P45
  Tips P347
  Tools P310
Malfunction indicator light (check engine warning light) P140
Manual
  Climate control P205
  mode (automatic transmission) P244
  Seat P35
  Transmission P238
  Transmission oil P359, P391
Map light P216
Meters and gauges P131
Mirror defogger P189
Mirrors P190

N

Navigation system-linked display P160
New vehicle break-in driving P298

O

Odometer P132
Oil filter P353
Oil level
Differential gear P359
Engine P352
Manual transmission P359
Oil pressure warning light P141
One-touch lane change P186
Outside
Mirrors P198
Mirror defogger P189
Overheating engine P323

P

Parking
Brake P261
Brake stroke P363
Tips P261
Periodic inspections P300
Petrol fuel P227
PIN code Access P102
Power
Door locking switch P115
Outlets P219
Outside mirrors P198
Steering P248
Steering warning light P145
Window switches P119
Windows P119
Power and torque curve P159
Precautions against vehicle modification P48, P91
Preparing to drive P232
Push-button
Ignition switch P129
Starting and stopping engine P233

R

Rear Cross Traffic Alert (RCTA) P272
Rear seat P39
Folding down P39
Rear seatbelt warning light P137
Rear view camera P266
Rear window
Defogger P189
Recommended
Brake fluid P391
Clutch fluid P361, P391
Differential gear oil P391
Engine oil P389
Manual transmission oil P391
Spark plugs P393
Refueling P229
Remote control mirror switch P198
Remote keyless entry system P111
Replacing battery P385

Replacement
Access key fob battery ... P385
Air cleaner element ... P356
Battery of access key fob ... P385
Brake pad and lining ... P362
Cabin air filter ... P209
Lost transmitters (remote keyless entry system) ... P113
Wiper blades ... P376
Replacing bulbs ... P382
Backup light ... P382
Headlight ... P382
Trunk light ... P383
REV indicator light and buzzer ... P134
Reverse Automatic Braking (RAB) system ... P280
OFF indicator light ... P155
ON/OFF setting ... P155, P287
Warning indicator ... P155, P288
Rocking the vehicle ... P305
Roof antenna ... P214

S

Safety
Precautions when driving ... P5
Symbol ... P4
Warnings ... P3
Sealing flat tire ... P311
Flat tire repair kit ... P313
How to seal ... P315
Safety precautions ... P312
Seat
Fabric ... P339
Front ... P32
Heater ... P37
Height adjustment ... P35
Rear ... P39
Seatbelt ... P5, P41
Fastening ... P43
Maintenance ... P45
Pretensioners ... P46
Safety tips ... P41
Warning light and chime ... P135
Security
Alarm system ... P117
Immobilizer ... P110
Indicator light ... P152
Select lever
Position indicator ... P153
Shift lock function ... P243
Settings display ... P161
Shoulder pretensioner ... P46
Sonar Audible Alarm ... P289
OFF indicator light ... P155
ON/OFF setting ... P155, P294
Warning indicator ... P155, P294
Snow tires ... P304, P364
Snowy and icy roads ... P303
Sounding a panic alarm ... P112
Spark plugs ... P358, P393

Specifications P388
Speedometer P131
SRS airbag (Supplemental Restraint System airbag) P5, P62
Monitors P89
Servicing P90
Warning light P72, P89, P139
Starting & stopping engine P233
State emission testing (U.S. only) P231
Steering lock P237
Steering Responsive Headlight P184
OFF indicator P154
OFF indicator light P154
ON/OFF setting P154, P184
Warning light P154
Steering wheel
Lock P237
Power P248
Tilt/telescopic P199
Stopwatch P159
Storage compartment P217
Summer tires P364
Sun visors P217
Supplemental Restraint System (SRS) P62
Supplemental Restraint System airbag (SRS) P62
Curtain airbag P82
Side airbag P82
Synthetic leather upholstery P340

T

Tachometer P131
Temperature gauge P133
Temperature warning light
AT OIL TEMP P142
Tether (child restraint system) P57, P61
Tie-down hooks P324
Tilt/telescopic steering wheel P199
Tire P364, P393
All season tires P364
Chains P305
Information P402
Inspection P366
Pressures and wear P367
Replacement P370
Rotation P370
Size and pressure P393
Types P364
Tire pressure monitoring system (TPMS) P257, P319, P364
Screen P260
Warning light P142
Tires and wheels P364
Tools P310
Top tether anchorages P57, P61
Towing P324
All wheels on the ground P328
Flat-bed truck P328
Hooks P324
Tie-down hooks P324

TPMS screen P260
TRACK mode P256
Trailer
Towing P308
Trip meter P132
Trunk lid P122
Release handle P123
Trunk light P383
Turn signal
Indicator lights P153
Lever P186

U

Under-floor storage compartment P223
USB power supply P220

V

Vanity mirror P217
Light P217
Vehicle
Capacity weight P307
Identification P398
Symbols P5
Vehicle data recording P12
Vehicle Stability Control (VSC)
OFF indicator light P147
OFF switch P254
Operation indicator light P146, P147
Warning light P146
Vehicle Stability Control (VSC)/TRAC
System P253
Ventilator P202
Voltmeter P157

W

Warning and indicator lights P135
Warning chimes
Keyless access with push-button start system P147
Seatbelt P135
Warning indicator
RAB P155, P288
Sonar Audible Alarm P155, P294
Warning light
ABS P144
Access key P147
Access key fob P148
AT OIL TEMP P142
Automatic headlight beam leveler P153
Brake system P144
Charge P141
CHECK ENGINE P140
Icy road surface P154
Keyless access with push-button start system P147
LED headlight P153
Low fuel P145
Low tire pressure P142
Master P155

Oil pressure P141
Power steering P145
Seatbelt P135
SRS airbag system P139
Steering Responsive Headlight P154
Vehicle Stability Control (VSC) P146
Warning message display P163
Warranties P2
Washing P336
Waxing and polishing P337
Wear indicators P369
Welcome lighting function P179
Wheel
Alloy P375
Balance P369
Nut tightening torque P311, P393
Replacement P374
Windows P119
Windshield
Washer fluid P375
Wiper and washer switches P187
Wiper blades P377
Winter
Driving P302
Tires P304, P364
Wiper and washer P187

GAS STATION REFERENCE

■ Fuel

Use only **unleaded gasoline** with an octane rating of **93 AKI (98 RON) or higher**.

■ Fuel octane rating

▼ RON

This octane rating is the Research Octane Number.

▼ AKI

This octane rating is the average of the Research Octane and Motor Octane numbers and is commonly referred to as the Anti Knock Index (AKI).

■ Limit of ethanol content

No more than 15%

■ Fuel tank capacity

13.2 US gal (50 liters, 11.0 Imp gal)

■ Engine oil

Always use the SUBARU approved engine oil. For further details, please contact your SUBARU dealer.

If the approved engine oil is unavailable, use the alternative engine oil described as follows.

- API SN oil or an oil of equivalent or better performance (labeled “RESOURCE CONSERVING”)
- or ILSAC GF-5 oil or an oil of equivalent or better performance (identified by the ILSAC certification “Starburst” mark)

For the complete viscosity requirements, refer to "Engine Oil" ☞P389.

■ Engine oil capacity

Changing the oil:
5.1 US qt (4.8 liters, 4.2 Imp qt)

Changing the oil and oil filter:
5.3 US qt (5.0 liters, 4.4 Imp qt)

The indicated oil quantity is only a guideline and is estimated based on a case when the engine oil is changed with an oil filter. After refilling the engine with oil, the oil level should be checked using an oil level gauge. For more details about maintenance and service, refer to "Engine Oil" ☞P352.

■ Cold tire pressure

Refer to "Tires" ☞P393.