

2027 Z

OWNER'S MANUAL
and MAINTENANCE INFORMATION

For your safety, read carefully and keep in this vehicle.

CALIFORNIA PROPOSITION 65 WARNING

⚠WARNING

Operating, servicing and maintaining a passenger vehicle or off-highway motor vehicle can expose you to chemicals including engine exhaust, carbon monoxide, phthalates, and lead, which are known to the State of California to cause cancer and birth defects or other reproductive harm. To minimize exposure, avoid breathing exhaust, do not idle the engine except as necessary, service your vehicle in a well-ventilated area and wear gloves or wash your hands frequently when servicing your vehicle. For more information go to www.P65Warnings.ca.gov/passenger-vehicle.

NEW MEXICO PFAS LABELING



Foreword

BASIC INFORMATION

This manual was prepared to help you understand the operation and maintenance of your vehicle so that you may enjoy many miles (kilometers) of driving pleasure. Please read through this manual before operating your vehicle.

A separate Warranty Information Booklet can be found at: https://www.nissanusa.com/owners/manuals-guides.html for U.S. or https://www.nissan.ca/owners/manuals-and-guides.html for Canada. The "Maintenance and schedules" section of this manual explains details about maintaining and servicing your vehicle.

Additionally, a separate Customer Care and Lemon Law Information Booklet (U.S. only) will explain how to resolve any concerns you may have with your vehicle, and clarify your rights under your state's lemon law.

In addition to factory-installed options, your vehicle may also be equipped with additional accessories installed prior to delivery. It is important that you familiarize yourself with all disclosures, warnings, cautions and instructions concerning proper use of such accessories prior to operating the vehicle and/or accessory. It is recommended that you visit a NISSAN dealer for details concerning the particular accessories with which your vehicle is equipped.

A NISSAN dealership knows your vehicle best. When you require any service or have any questions, they will be glad to assist you with the extensive resources available to them.

READ FIRST — THEN DRIVE SAFELY

Before driving your vehicle, please read this Owner's Manual carefully. This will ensure familiarity with controls and maintenance requirements, assisting you in the safe operation of your vehicle.

⚠ WARNING

IMPORTANT SAFETY INFORMATION REMINDERS!

Follow these important driving rules to help ensure a safe and comfortable trip for you and your passengers!

- **NEVER drive under the influence of alcohol or drugs.**
- **ALWAYS observe posted speed limits and never drive too fast for conditions.**
- **ALWAYS give your full attention to driving and avoid using vehicle features or taking other actions that could distract you.**
- **ALWAYS use your seat belts and appropriate child restraint systems.**
- **ALWAYS provide information about the proper use of vehicle safety features to all occupants of the vehicle.**
- **ALWAYS review this Owner's Manual for important safety information.**

MODIFICATION OF YOUR VEHICLE

⚠ WARNING

This vehicle should not be modified. Modification could affect its performance, safety, emissions or durability and may even violate governmental regulations. In addition, damage or performance problems resulting from modifications may not be covered under NISSAN warranties.

If modification of an advanced front airbag system is necessary to accommodate a person with disabilities, consult the contact information provided below before making any changes.

For U.S. customers:

https://www.nissanmobilityassist.com

For Canadian customers:

See the NISSAN CUSTOMER CARE PROGRAM page in this Owner's Manual for contact information.

Installing an aftermarket On-Board Diagnostic (OBD) plug-in device that uses the port during normal driving, for example remote insurance company monitoring, remote vehicle diagnostics, telematics or engine reprogramming, may cause interference or damage to vehicle systems. We do not recommend or endorse the use of any aftermarket OBD plug-in devices, unless specifically approved by NISSAN. The vehicle warranty may not cover damage caused by any aftermarket plug-in device.

WHEN READING THE MANUAL

This manual includes information for all features and equipment available on this model. Features and equipment in your vehicle may vary depending on model, trim level, options selected, order, date of production, region or availability. Therefore, you may find information about features or equipment that are not included or installed on your vehicle.

All information, specifications and illustrations in this manual are those in effect at the time of printing. NISSAN reserves the right to change specifications, performance, design or component suppliers without notice and without obligation.

From time to time, NISSAN may update or revise this manual to provide Owners with the most accurate information currently available. Please carefully read and retain with this manual all revision updates sent to you by NISSAN to ensure you have access to accurate and up-to-date information regarding your vehicle. Current versions of vehicle Owner's Manuals and any updates can also be found in the Owner section of the NISSAN website at https://www.nissanusa.com/owners/manuals-guides.html for US or https://www.nissan.ca/owners/manuals-and-guides.html for Canada. If you have questions concerning any information in your Owner's Manual, contact NISSAN Consumer Affairs. For contact information, refer to the NISSAN CUSTOMER CARE PROGRAM page in this Owner's Manual.

IMPORTANT INFORMATION ABOUT THIS MANUAL

You will see various symbols in this manual. They are used in the following ways:

⚠ WARNING

This is used to indicate the presence of a hazard that could cause death or serious personal injury. To avoid or reduce the risk, the procedures must be followed precisely.

⚠ CAUTION

This is used to indicate the presence of a hazard that could cause minor or moderate personal injury or damage to your vehicle. To avoid or reduce the risk, the procedures must be followed carefully.

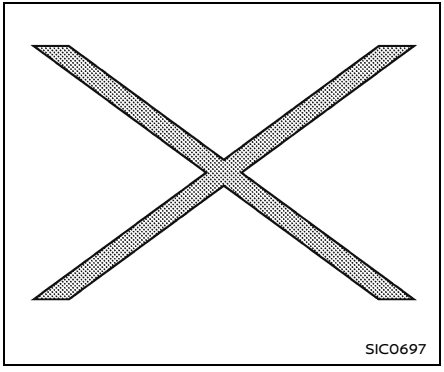

If you see the symbol above, it means **"Do not do this"** or **"Do not let this happen"**.



If you see a symbol similar to those above in an illustration, it means the arrow points to the front of the vehicle.



Arrows in an illustration that are similar to those above indicate movement or action.



Arrows in an illustration that are similar to those above call attention to an item in the illustration.

CALIFORNIA PERCHLORATE ADVISORY

Some vehicle parts, such as lithium batteries, may contain perchlorate material. The following advisory is provided: "Perchlorate Material - special handling may apply, See www.dtsc.ca.gov/hazardouswaste/perchlorate."

QR CODE

The word "QR code" is registered trademark of DENSO WAVE INCORPORATED in Japan and other countries.

COPYRIGHT

© 2026 NISSAN MOTOR CO., LTD.

All rights reserved. No part of this Owner's Manual may be reproduced or stored in a retrieval system, or transmitted in any form, or by any means, electronic, mechanical, photocopying, recording or otherwise, without the prior written permission of Nissan Motor Co., Ltd.

NISSAN CUSTOMER CARE PROGRAM

NISSAN CARES ...

Both NISSAN and your NISSAN dealer are dedicated to serving all your automotive needs. Your satisfaction with your vehicle and your NISSAN dealer are our primary concerns. Your NISSAN dealer is always available to assist you with all your automobile sales and service needs.

However, if there is something that your NISSAN dealer cannot assist you with or you would like to provide NISSAN directly with comments or questions, please contact the NISSAN Consumer Affairs Department using our toll-free number:

For U.S. customers

1-800-NISSAN-1

(1-800-647-7261)

For Canadian customers

1-800-387-0122

The Consumer Affairs Department will ask for the following information:

- Your name, address, and telephone number
- Vehicle identification number (attached to the top of the instrument panel on the driver's side)
- Date of purchase
- Current odometer reading
- Your NISSAN dealer's name
- Your comments or questions

OR

You can write to NISSAN with the information at:

For U.S. customers

Nissan North America, Inc.

Consumer Affairs Department

P.O. Box 685003

Franklin, TN 37068-5003

or via e-mail at:

nnaconsumeraffairs@nissan-usa.com

For Canadian customers

Nissan Canada Inc.

5290 Orbitor Drive

Mississauga, Ontario L4W 4Z5

or via e-mail at:

information.centre@nissan-canada.com

If you prefer, visit us at:

www.nissanusa.com (for U.S. customers)
or

www.nissan.ca (for Canadian customers)

We appreciate your interest in NISSAN and thank you for buying a quality NISSAN vehicle.

NISSAN SOFTWARE LICENSE

- Your vehicle includes physical parts and/or physical components of such parts on which software and/or firmware ("Software") is embedded or installed. Additionally, updates to Software may be made available by NISSAN for download and installation by owners from time to time as determined by NISSAN in its sole discretion. Such Software, and all updates thereto, including updates delivered by NISSAN to your vehicle over the air (collectively "Updates"), are licensed, and not sold, to you. A portion of the Software may contain or consist of open source software, which may be used under the terms and conditions of the specific license under which the open source software is distributed. For other Software, including Software for which there is no separate license agreement between you and the manufacturer or owner of the Software, the terms and conditions governing your right to use and the use of the installed Software, including any Updates, applications, services, and content provided for or through the Software, are set forth in the End User License Agreement found at:

  For U.S. customers — https://www.nissanusa.com/owners/vehicle-software.html

  For Canadian customers — https://www.nissan.ca/owners/owner-support.html

  Your use of the Software, including any Updates, constitutes consent to the End User License Agreement's terms and conditions.
- PLEASE NOTE: The End User License Agreement contains an arbitration clause. You may opt out of this arbitration clause within 30 days of the date of your vehicle purchase by sending a signed, written notice to NISSAN at the following address:

For U.S. customers
Nissan North America, Inc.
Consumer Affairs Department
P.O. Box 685003
Franklin, TN 37068-5003

For Canadian customers
Nissan Canada Inc.
Consumer Affairs Department
5290 Orbitor Drive
Mississauga, Ontario L4W 4Z5

- Please refer to "Updating system software" in the 5. Information section or "Software Update" in the 2. Getting Started section of the NissanConnect® Owner's Manual for information about installing Over-the-Air Updates. For questions or assistance concerning installation of any over-the-air Update, you may contact NISSAN Owner Services at 1-800-333-0207 for U.S. customers, or for Canadian customers NISSAN Consumer Affairs at consumeraffairs@nissancanada.com. You may also choose to visit a NISSAN dealer for assistance - charges may apply.

RIGHT TO REPAIR DISCLAIMER – NISSAN CANADA

NOTICE TO QUEBEC CONSUMERS:

Nissan Canada Inc. is pleased to offer a 36-month / 60,000 km (whichever occurs first) limited new-vehicle warranty on your Nissan vehicle. This warranty covers repairs on any part of the vehicle supplied by Nissan Canada that is defective in material or workmanship, subject to the terms and conditions outlined in your warranty booklet.

In accordance with Quebec's Consumer Protection Act, Nissan Canada is required to disclose whether we guarantee the availability of replacement parts, repair services, and technical information necessary to maintain or repair your vehicle or its components.

While Nissan Canada is committed to honouring the terms of our limited warranty and providing high-quality service through our authorized dealerships and Certified Collision Repair Centres, ***we do not guarantee the availability of replacement parts, repair services, or technical information necessary to maintain or repair your vehicle or its components beyond the scope of our warranty obligations.***

For more information on your warranty coverage, please refer to your Owner's Manual and Warranty Information Booklet, or visit www.nissan.ca.

Table of Contents

Illustrated table of contents	0
Safety — Seats, seat belts and supplemental restraint system	1
Instruments and controls	2
Pre-driving checks and adjustments	3
Center display, heater, air conditioner, audio, phone and voice recognition systems	4
Starting and driving	5
In case of emergency	6
Appearance and care	7
Do-it-yourself	8
Maintenance and schedules	9
Technical and consumer information	10
Index	11

MEMO

0 Illustrated table of contents

Seats, seat belts and Supplemental Restraint System (SRS) 4
Exterior front 5
Exterior rear 6
Exterior (NISMO models) 7
Passenger compartment 8
Cockpit 9
Instrument panel 10
Meters and gauges 11
Engine compartment 12
VR30DDTT engine model 12
Warning and indicator lights 13

SEATS, SEAT BELTS AND SUPPLEMENTAL RESTRAINT SYSTEM (SRS)

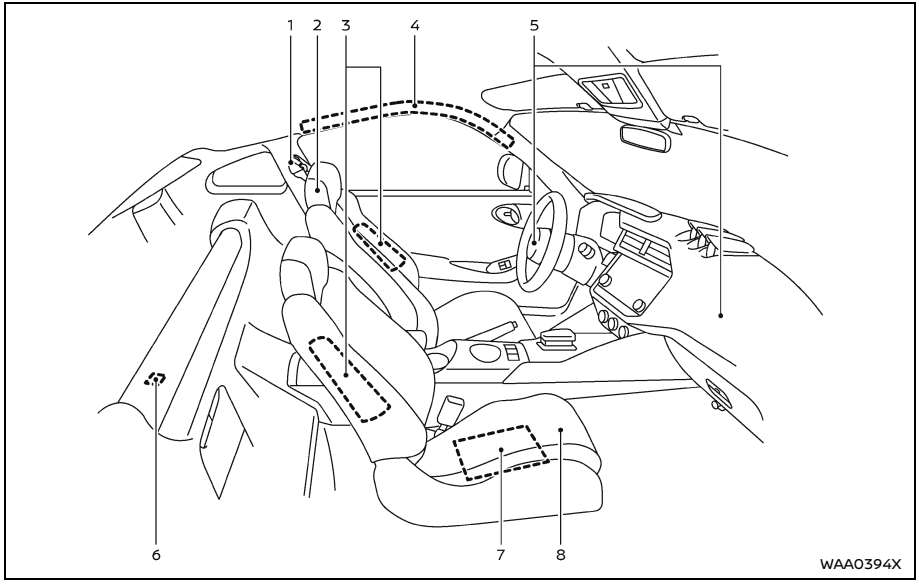

1. Seat belts (Page 24)
   – Seat belts with pretensioners (P.57)
2. Head restraints (P.21)
3. Front seat-mounted side-impact supplemental air bags (P.44)
4. Roof-mounted curtain side-impact and rollover supplemental air bags (P.44)
5. Supplemental front-impact air bags (P.44)
6. Child restraint anchor point (for top tether strap child restraint) (P.35)
7. Occupant classification sensor (pattern sensor) (P.50)
8. Front seats (P.17)

EXTERIOR FRONT

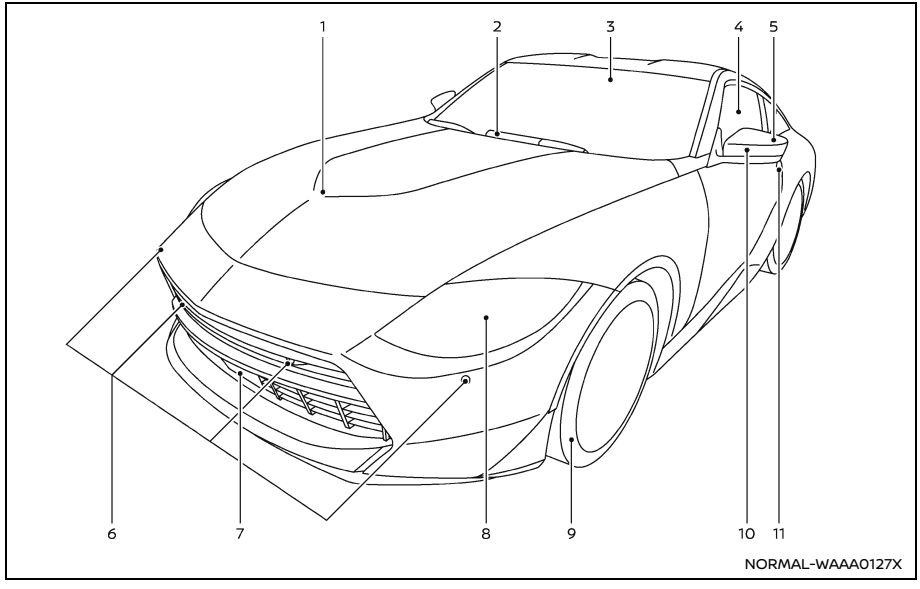

1. Hood (P.157)
2. Windshield wiper and washer
   - Switch operation (P.110)
   - Window washer fluid (P.339)
3. Front camera (P.114, P. 216, P.250)
4. Power windows (P.132)
5. Side turn signal light (P.112)
6. Sonar sensors
   - Sonar system (P.280)
7. License plate installation (P.400)
8. Headlight and turn signal light (P.112)
9. Tires
   - Wheels and tires (P.353, P.395)
   - Flat tire (P.299)
   - Tire Pressure Monitoring System (TPMS) (P.83, P.191)
10. Outside mirrors (P.166)
11. Doors
    - Keys (P.144)
    - Door locks (P.146)
    - Intelligent Key system (P.148)
    - Remote keyless entry system (P.153)

EXTERIOR REAR

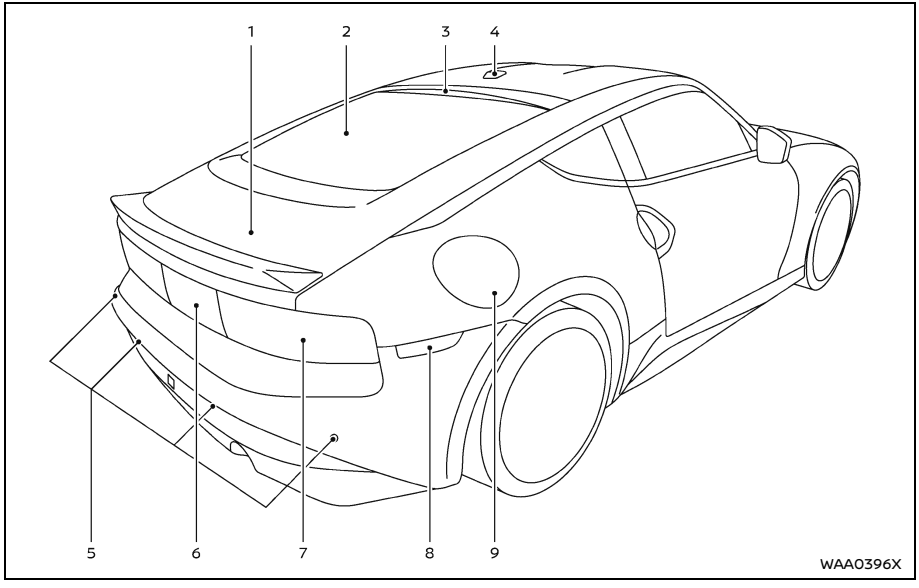

1. Rear hatch (P.157)
   - Intelligent Key system (P.148)
   - Rear hatch opener switch (P.157)
2. Rear window defroster (P.111)
3. High-mounted stop light (P.351)
4. Antenna (if so equipped) (P.184)
5. Sonar sensors
   - Sonar system (P.280)
6. Rear view camera (P.172)
7. Rear combination light (P.351)
8. Rear side marker light (P.351)
9. Fuel-filler door (P.161)
   - Fuel information (P.389)

EXTERIOR (NISMO models)

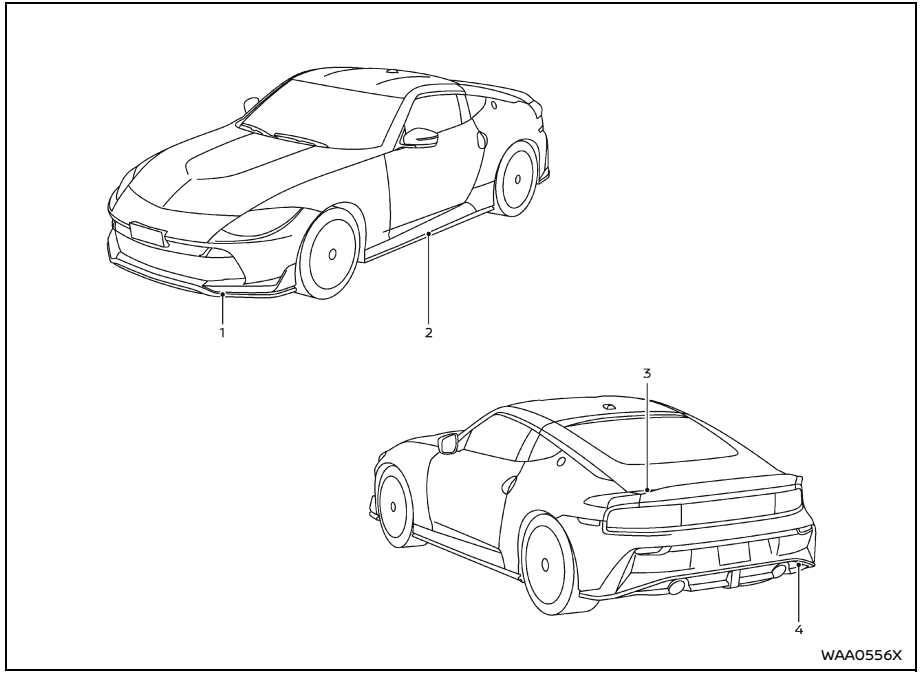

For NISMO models, the vehicle parts listed below require special care or caution for treating. Refer to the additional information in each section.

1. Front bumper with an aerodynamic splitter (P.160, P.315)
2. Side sill extensions (P.160)
3. Rear spoiler (P.158, P.319)
4. Rear bumper with an aerodynamic diffuser (P.160, P.315)

PASSENGER COMPARTMENT

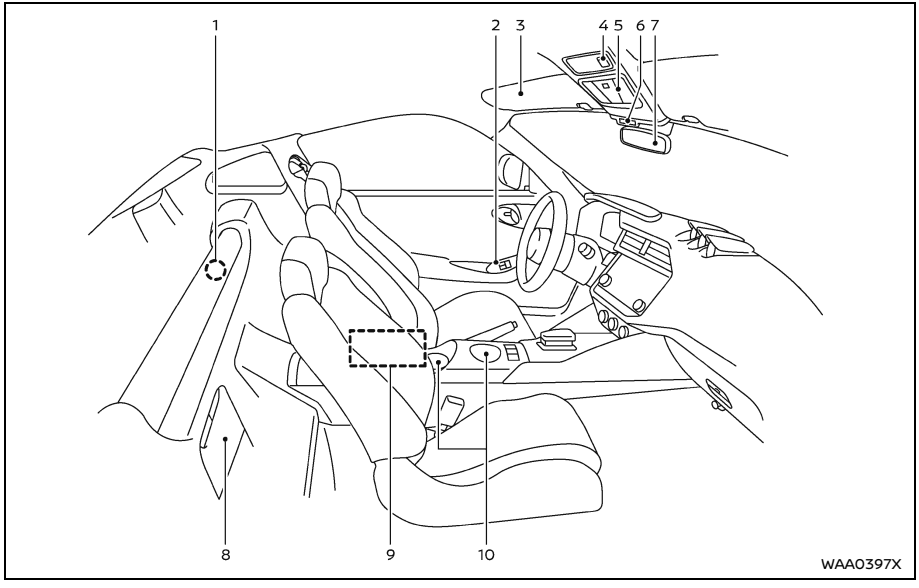

1. Secondary rear hatch release (under the cargo room carpet) (P.159)
2. Door armrest
   - Power window switch (P.132)
   - Power door lock switch (P.147)
   - Outside mirror remote control switch (driver's side) (P.166)
3. Sun visors (P.164)
4. Emergency Call (SOS) button (if so equipped) (P.127)
5. Map light (P.134)
6. Front passenger air bag status light (P.50)
7. Inside mirror (P.165)
   - HomeLink® (if so equipped) (P.136)
8. Rear parcel box (P.130)
9. Console box (P.130)
   - Power outlet (P.123)
10. Front cup holders (P.128)

COCKPIT

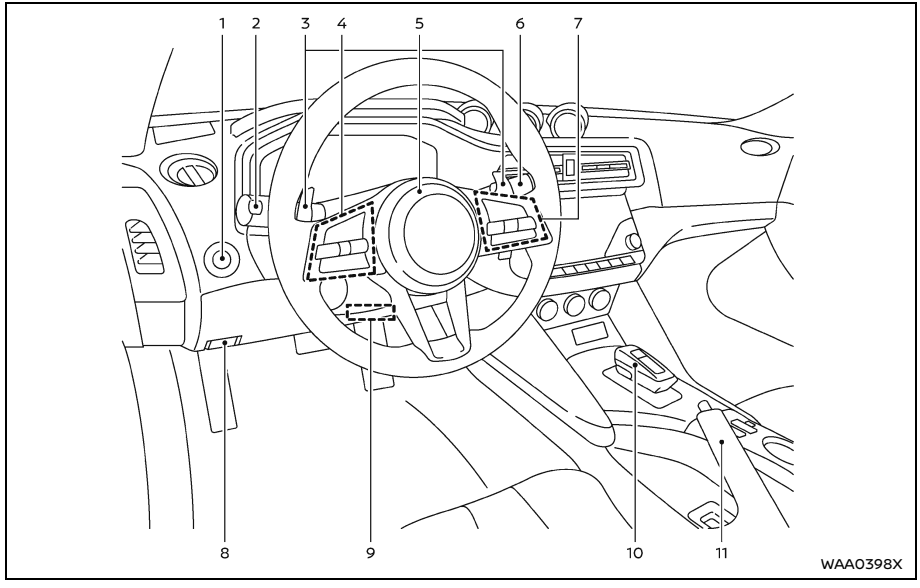

1. Vehicle Dynamic Control (VDC) OFF switch (P.122, 291)
2. Headlight, fog light and turn signal switch (P.112)
3. Paddle shifter (Automatic Transmission models) (P.206)
4. Steering-wheel-mounted controls (left side)
   - Audio control*
   - Vehicle information display control (P.87)
5. Steering wheel
   - Horn (P.120)
6. Wiper and washer switch (P.110)
7. Steering-wheel-mounted controls (right side)
   - Intelligent Cruise Control (ICC) switches (P.230)
   - Bluetooth® Hands-Free Phone System switches*
   - Voice Recognition system switch*
   - Siri® Eyes Free*
8. Hood release handle (P.157)
9. Tilt and telescopic steering lock lever (P.164)
10. Shift lever
    - Automatic Transmission (AT) (P.202)
    - Manual Transmission (MT) (P.207)
11. Parking brake (P.214)

*: See the separate NissanConnect® Owner's Manual.

INSTRUMENT PANEL

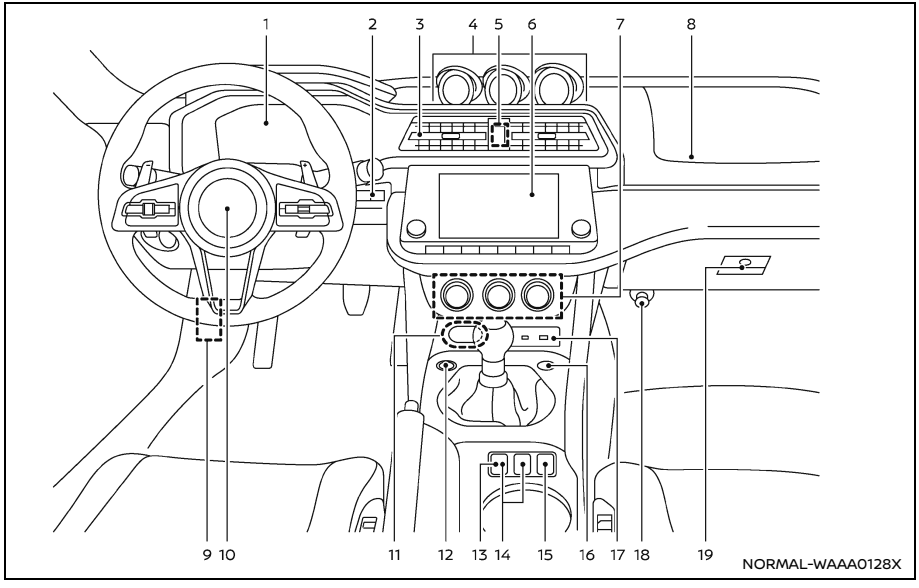

1. Meters and Gauges (P.71)
   - Clock (P.90)
2. Instrument brightness control (P.118) and TRIP/RESET switch for twin trip odometer (P. 74)
3. Ventilator (P.179)
4. Triple meter (P.78)
5. Hazard warning flasher switch (P.298)
6. Audio system* or navigation system (if so equipped)*
   - Bluetooth® Hands-Free Phone System*
   - RearView Monitor (P.172)
7. Heater and air conditioner (P.180)
   - Rear window defroster switch (P.111)
8. Front passenger supplemental air bag (P.44)
9. Fuse box cover (P.347)
10. Driver supplemental air bag (P.44)
11. Wireless charger (if so equipped) (P.124)
12. Push-button ignition switch (P.197)
13. SynchroRev Match mode (S-MODE) switch (if so equipped) (P.208)
14. Seat heater switch (if so equipped) (P.121)
15. Rear hatch release switch (P.159)
16. SynchroRev Match mode (S-MODE) switch (if so equipped) (P.208) or Drive Mode Selector (if so equipped) (P.215)
17. USB (Universal Serial Bus) connection ports*/USB (Universal Serial Bus) charging connector (P.124)
18. Power outlet (P.123)
19. Glove box (P.129)

*: See the separate NissanConnect® Owner's Manual.

METERS AND GAUGES

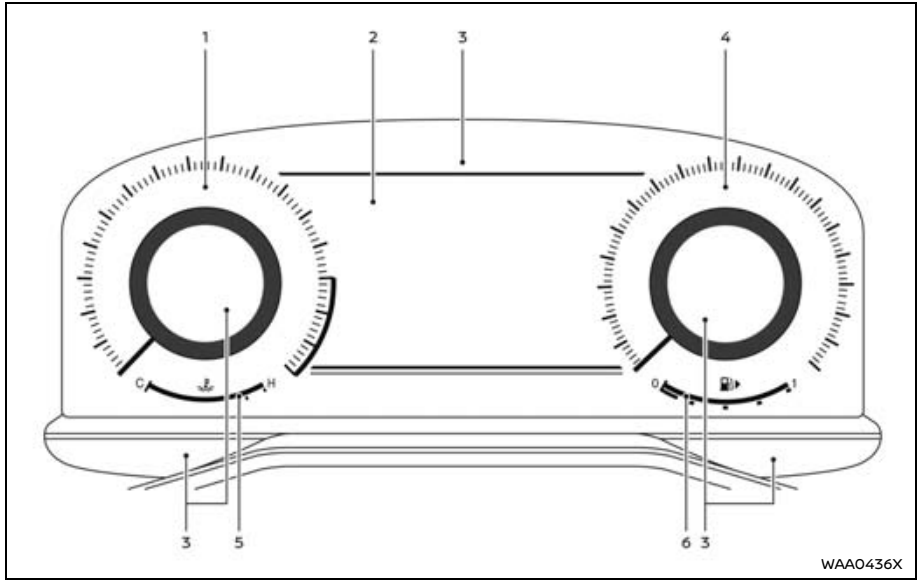

1. Tachometer (P.75)
2. Vehicle information display (P.87)
   – Odometer (P.73)
3. Warning and Indicator lights (P.78)
4. Speedometer (P.73)
5. Engine coolant temperature gauge (P.75)
6. Fuel gauge (P.76)

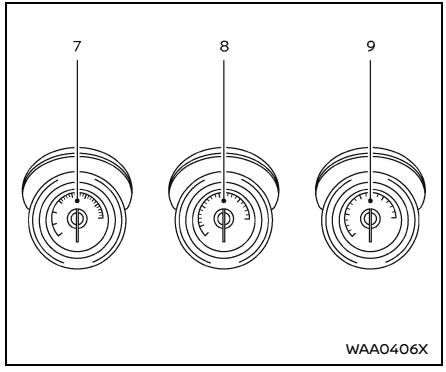

7. Boostmeter (P.78)
8. Turbo Speedometer (P.78)
9. Voltmeter (P.78)

ENGINE COMPARTMENT

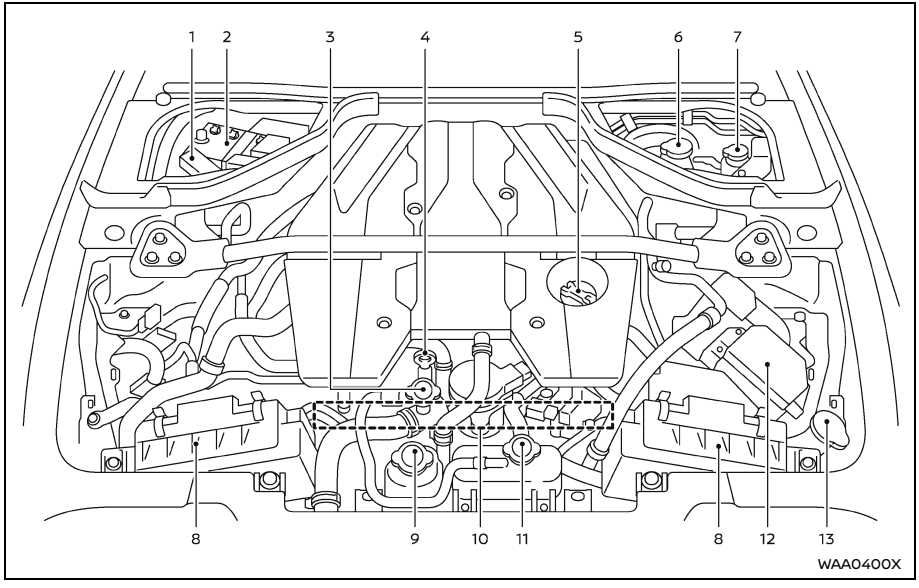

1. Fuse/fusible link holder (P.346)
2. Battery (P.339)
3. Radiator filler cap (P.331)
4. Engine oil dipstick (P.335)
5. Engine oil filler cap (P.335)
6. Brake fluid reservoir (P.337)
7. Clutch fluid reservoir (Manual Transmission models) (P.337)
8. Air cleaner (P.343)
9. Intercooler cooling reservoir (P.333)
10. Drive belt location (P.342)
11. Engine coolant reservoir (P.331)
12. Fuse/fusible link holder (P.346)
13. Window washer fluid reservoir (P.339)

VR30DDTT ENGINE MODEL

NOTE:
Your vehicle may not be equipped with an engine cover.

WARNING AND INDICATOR LIGHTS

Red light	Name	Page
	Brake warning light	79
	Charge warning light	79
	Electric shift control system warning light (if so equipped)	80
	Engine oil pressure warning light	80
	Master warning light	80
	Pop-up engine hood warning light	80
	Seat belt warning light	81
	Security indicator light	81
	Supplemental air bag warning light	81

Yellow light	Name	Page
	Anti-lock Braking System (ABS) warning light	82
	Automatic Emergency Braking (AEB) system OFF warning light	82
	Electric power steering warning light	82
	Front passenger air bag status light	83
	Low tire pressure warning light	83
	Malfunction Indicator Light (MIL)	84
	Master warning light	85
	Slip indicator light	85
	Vehicle Dynamic Control (VDC) off indicator light	86

Other light	Name	Page
	Exterior light indicator	86
	High beam assist indicator light	86
	High beam indicator light	86
	Rear fog light indicator light (if so equipped)	86
	Turn signal/hazard indicator lights	86

MEMO

1 Safety — Seats, seat belts and supplemental restraint system

Seats 16
- Basic information 16
- Front seats 17

Head restraints/headrests (if so equipped) 21
- Basic information 21
- Adjustable head restraint/headrest components 22
- Remove 22
- Install 22
- Adjust 23
- Front-seat Active Head Restraints 24

Seat belts 24
- Precautions on seat belt usage 24
- Seat belt warning light and chime 27
- Pregnant women 28
- Injured persons 28
- Three-point type seat belt 28
- Seat belt extenders 30
- Seat belt maintenance 31

Child safety 31
- Basic information 31
- Infants 32
- Small children 32
- Larger children 32

Child restraints 34
- Precautions on child restraints 34
- Top tether strap child restraint 35
- Forward-facing child restraint installation using the seat belts 37
- Installing top tether strap 41
- Booster seats 41

Supplemental restraint system 44
- Precautions on supplemental restraint system 44
- NISSAN Advanced Air Bag System (front seats) 50
- Front seat-mounted side-impact and roof-mounted curtain side-impact and rollover supplemental air bag systems 55
- Seat belts with pretensioners (front seats) 57
- An air bag only works once 58
- Supplemental air bag warning labels 61
- Supplemental air bag warning light 61
- Repair and replacement procedure 61

Pop-up engine hood 62
- Basic information 62
- Pop-up engine hood activation conditions 64

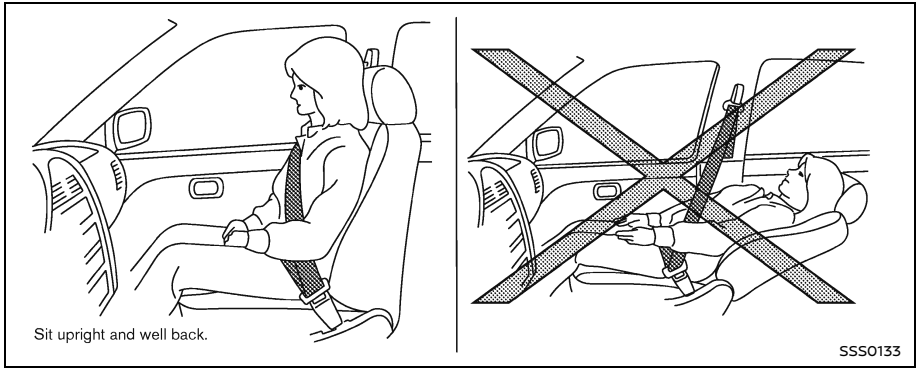
Sit upright and well back.
SSS0133

BASIC INFORMATION

WARNING

- **Do not ride in a moving vehicle when the seatback is reclined. This can be dangerous. The shoulder belt will not be against your body. In an accident, you could be thrown into it and receive neck or other serious injuries. You could also slide under the lap belt and receive serious internal injuries.**
- **For the most effective protection when the vehicle is in motion, the seat should be upright. Always sit well back and upright in the seat with both feet on the floor and adjust the seat belt properly. See "Precautions on seat belt usage" (P.24).**
- **After adjustment, gently rock in the seat to make sure it is securely locked.**
- **Do not leave children unattended inside the vehicle. They could unknowingly activate switches or controls. Unattended children could become involved in serious accidents.**
- **To help avoid risk of injury or death through unintended operation of the vehicle and/or its systems, do not leave children, people who require the assistance of others or pets unattended in your vehicle. Additionally, the temperature inside a closed vehicle on a warm day can quickly become high enough to cause a significant risk of injury or death to people and pets.**
- **The seatback should not be reclined any more than needed for comfort. Seat belts are most effective when the passenger sits well back and straight up in the seat. If the seatback is reclined, the risk of sliding under the lap belt and being injured is increased.**

- **Do not place objects under the front seats as they could get stuck and prevent the seat from locking in place which could lead to an accident.**
- **Do not leave a cigarette lighter in the vehicle or place it on the floor or seat as it may be lit accidentally when luggage is loaded, when the seat is adjusted, by a child or by being stepped on by a passenger, causing a fire.**

⚠ CAUTION

When adjusting the seat positions, be sure not to contact any moving parts to avoid possible injuries and/or damages.

FRONT SEATS

Front power seat adjustment

Operating tips:

- The power seat motor has an auto-reset overload protection circuit. If the motor stops during operation, wait 30 seconds, then reactivate the switch.
- Do not operate the power seat switch for a long period of time when the engine is off. This will discharge the battery.

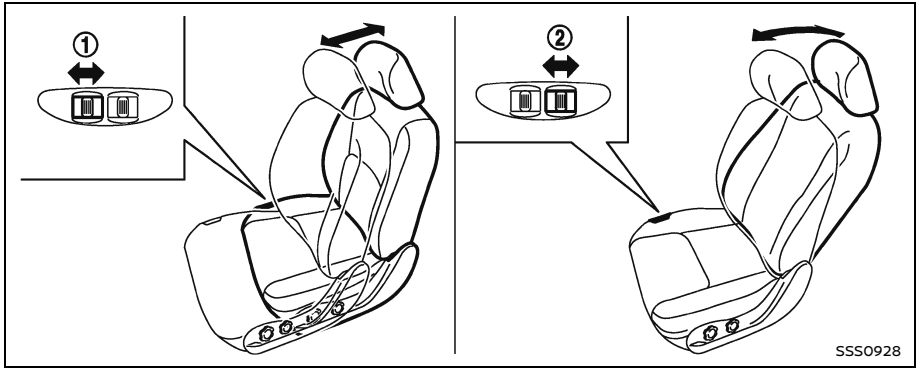

Forward and backward:

Moving the switch ① forward or backward will slide the seat forward or backward to the desired position.

Reclining:

Move the recline switch ② backward until the desired angle is obtained. To bring the seatback forward again, move the switch ② forward.

The reclining feature allows adjustment of the seatback for occupants of different sizes for added comfort and to help obtain proper seat belt fit. (See "Precautions on seat belt usage" (P.24).)

The seatback may be reclined to allow occupants to rest when the vehicle is parked.

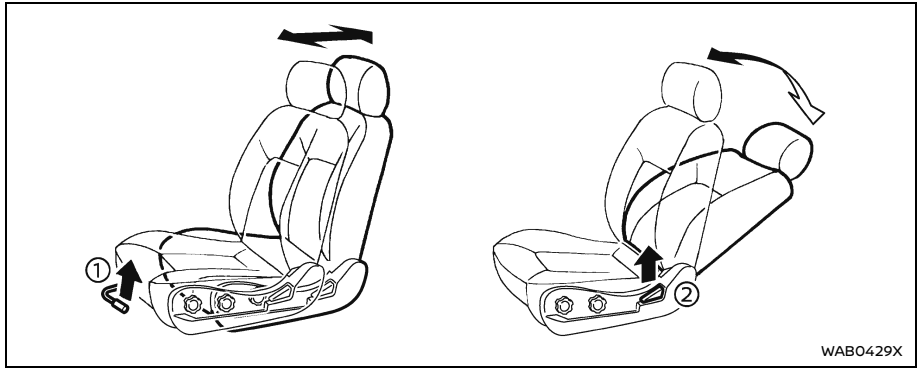

Type A (if so equipped)

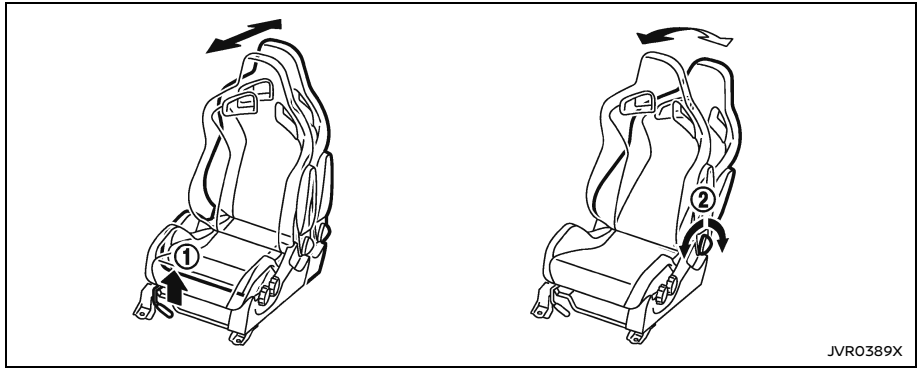

Type B (if so equipped)

Front manual seat adjustment

Forward and backward:

Pull the lever up ① while you slide the seat forward or backward to the desired position. Release the lever to lock the seat in position.

Reclining:

Type A (if so equipped): To recline the seatback, pull the lever up ② and lean back. To bring the seatback forward again, pull the lever and move your body forward. The seatback will move forward.

Type B (if so equipped): To recline the seatback, turn the adjusting dial ② toward the rear of the vehicle and lean back. To bring the seatback forward, turn the adjusting dial toward the front of the vehicle and lean your body forward.

The reclining feature allows adjustment of the seatback for occupants of different sizes for added comfort and to help obtain proper seat belt fit. See "Precautions on seat belt usage" (P.24).

The seatback may be reclined to allow occupants to rest when the vehicle is parked.

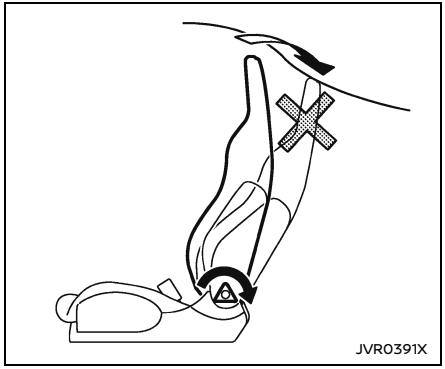

Type B (if so equipped)

NOTE:
When reclining the seat, do not allow the seatback to contact the roof. Doing so may leave temporary indentations on the seat.

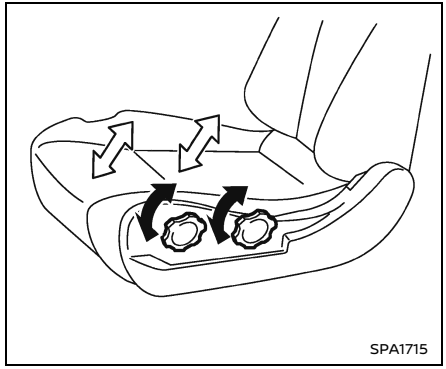

Seat lifter

Turn either dial to adjust the angle and height of the seat cushion to the desired position.

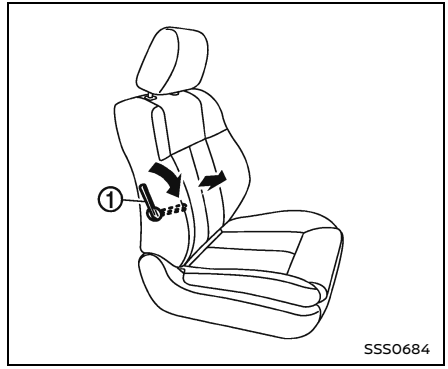

Lumbar support (if so equipped)

The lumbar support feature provides lower back support to the driver.

Move the lever ① up or down to adjust the seatback lumbar area.

HEAD RESTRAINTS/HEADRESTS (if so equipped)

BASIC INFORMATION

⚠ WARNING

Head restraints/headrests supplement the other vehicle safety systems. They may provide additional protection against injury in certain rear end collisions. Adjustable head restraints/headrests must be adjusted properly, as specified in this section. Check the adjustment after someone else uses the seat. Do not attach anything to the head restraint/headrest stalk, except for genuine NISSAN accessories specifically tested for use with the vehicle's head restraint/headrest stalk. Do not remove the head restraint/headrest. Do not use the seat if the head restraint/headrest has been removed. If the head restraint/headrest was removed, reinstall and properly adjust the head restraint/headrest before an occupant uses the seating position. Failure to follow these instructions can reduce the effectiveness of the head restraint/headrest. This may increase the risk of serious injury or death in a collision.

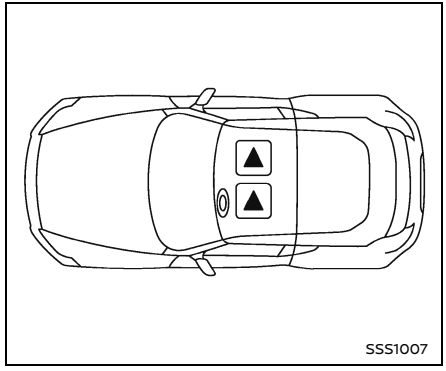

The illustration shows the seating positions equipped with head restraints/headrests.

▲ Indicates the seating position is equipped with a head restraint.

- Your vehicle is equipped with a head restraint/headrest that may be integrated, adjustable or non-adjustable.
- Adjustable head restraints/headrests have multiple notches along the stalk to lock them in a desired adjustment position.
- The non-adjustable head restraints/headrests have a single locking notch to secure them to the seat frame.
- Proper Adjustment:
  - For the adjustable type, align the head restraint/headrest so the center of your ear is approximately level with the center of the head restraint/headrest.
  - If your ear position is still higher than the recommended alignment, place the head restraint/headrest at the highest position.
- If the head restraint/headrest has been removed, ensure that it is reinstalled and locked in place before riding in that designated seating position.

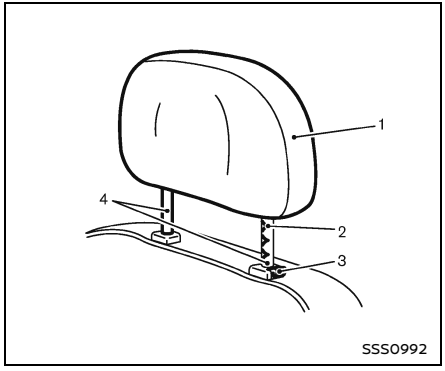

ADJUSTABLE HEAD RESTRAINT/HEADREST COMPONENTS

1. Removable head restraint/headrest
2. Multiple notches
3. Lock knob
4. Stalks

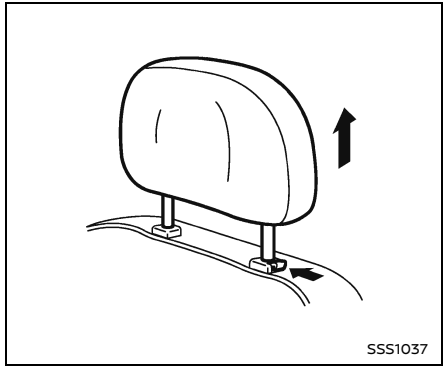

REMOVE

Use the following procedure to remove the head restraint/headrest.

1. Pull the head restraint/headrest up to the highest position.
2. Push and hold the lock knob.
3. Remove the head restraint/headrest from the seat.
4. Store the head restraint/headrest properly in a secure place so it is not loose in the vehicle.
5. Reinstall and properly adjust the head restraint/headrest before an occupant uses the seating position.

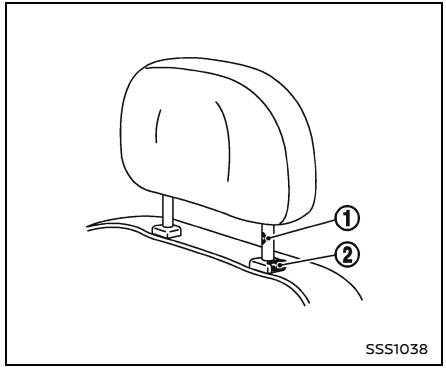

INSTALL

1. Align the head restraint/headrest stalks with the holes in the seat. Make sure that the head restraint/headrest is facing the correct direction. The stalk with the adjustment notch ① must be installed in the hole with the lock knob ②.
2. Push and hold the lock knob and push the head restraint/headrest down.
3. Properly adjust the head restraint/headrest before an occupant uses the seating position.

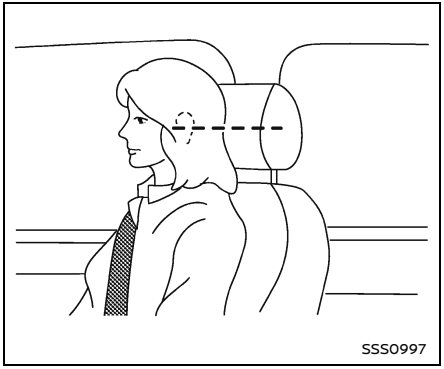

ADJUST

Basic information

Adjust the head restraint/headrest so the center is level with the center of your ears. If your ear position is still higher than the recommended alignment, place the head restraint/headrest at the highest position.

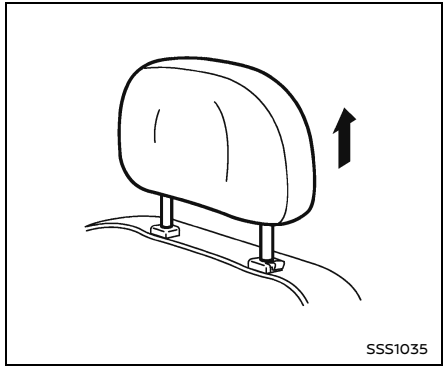

Raise

To raise the head restraint/headrest, pull it up.

Make sure the head restraint/headrest is positioned so the lock knob is engaged in the notch before riding in that designated seating position.

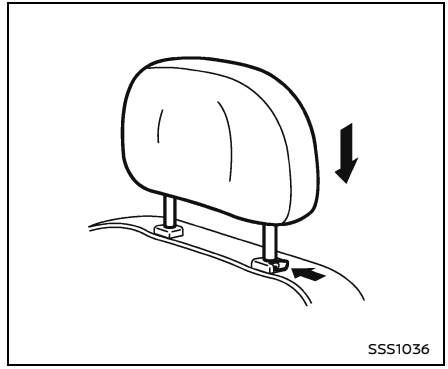

Lower

To lower, push and hold the lock knob and push the head restraint/headrest down.

Make sure the head restraint/headrest is positioned so the lock knob is engaged in the notch before riding in that designated seating position.

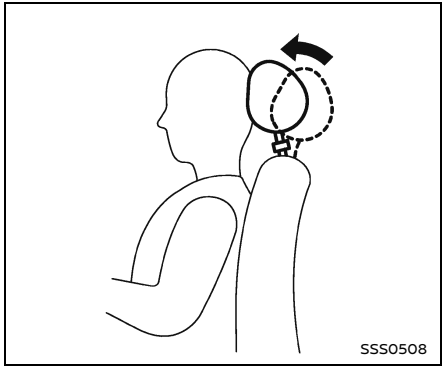

FRONT-SEAT ACTIVE HEAD RESTRAINTS

The Active Head Restraint moves forward utilizing the force that the seatback receives from the occupant in a rear-end collision. The movement of the head restraint helps support the occupant's head by reducing its backward movement and helping absorb some of the forces that may lead to whiplash-type injuries.

Active Head Restraints are effective for collisions at low to medium speeds in which it is said that whiplash injury occurs most.

Active Head Restraints operate only in certain rear-end collisions. After the collision, the head restraints return to their original positions.

The front head restraints have multiple adjustment notches.

Properly adjust the Active Head Restraints as described in this section.

SEAT BELTS

PRECAUTIONS ON SEAT BELT USAGE

Seat belts are the primary restraint mechanism in the vehicle and can help protect occupants during collisions—whether the airbags deploy, do not deploy, or in multi-impact collisions where the airbags have already deployed. If you are wearing your seat belt properly adjusted, and you are sitting upright and well back in your seat with both feet on the floor, your chances of being injured or killed in an accident and/or the severity of injury may be greatly reduced. NISSAN strongly encourages you and all of your passengers to buckle up every time you drive, even if your seating position includes a supplemental air bag.

Most U.S. states and Canadian provinces or territories specify that seat belts be worn at all times when a vehicle is being driven.

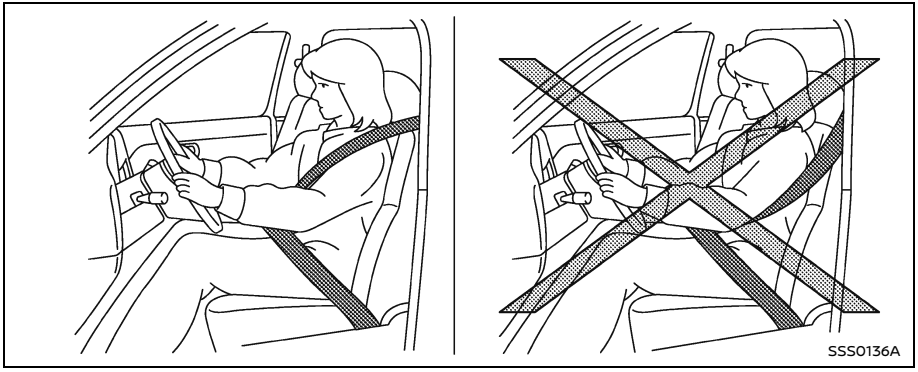
SSS0136A

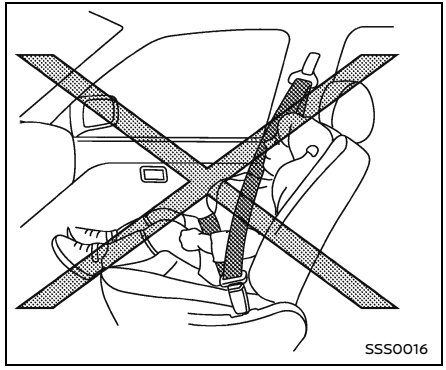
SSS0016

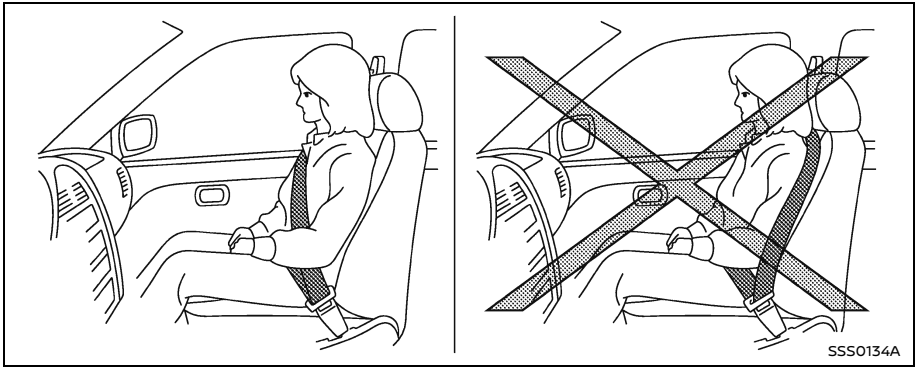
SSS0134A

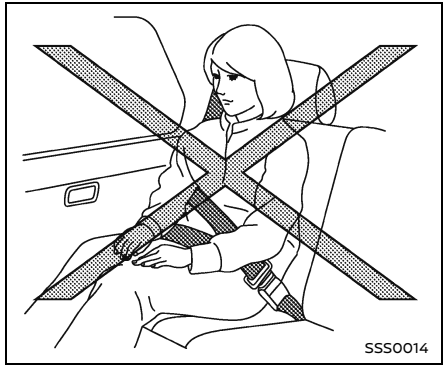
SSS0014

⚠ WARNING

Wearing your seat belt incorrectly could make your injuries in a collision much worse. You might suffer internal injuries, or you could even slide out of the seat belt. Follow these instructions to wear your seat belt safely and to help keep your passengers safe from serious injury or death:

- **Relying on the air bags alone could lead to more severe injuries in a collision. Every person who drives or rides in this vehicle should always use a seat belt.**
- **The seat belt should be properly adjusted to a snug fit. Failure to do so may reduce the effectiveness of the entire restraint system and increase the chance or severity of injury in an accident. Serious injury or death can occur if the seat belt is not worn properly.**
- **Always route the shoulder belt over your shoulder and across your chest. Never put the belt behind your back, under your arm or across your neck. The belt should be away from your face and neck, but not falling off your shoulder.**
- **Position the lap belt as low and snug as possible AROUND THE HIPS, NOT THE WAIST. A lap belt worn too high could increase the risk of internal injuries in an accident.**
- **Be sure the seat belt tongue is securely fastened to the proper buckle.**
- **Do not wear the seat belt inside out or twisted. Doing so may reduce its effectiveness.**
- **Do not allow more than one person to use the same seat belt.**
- **Never carry more people in the vehicle than there are seat belts.**
- **If the seat belt warning light illuminates continuously while the ignition is turned ON with all doors closed and all seat belts fastened, it may indicate a malfunction in the system. Have the system checked. It is recommended you visit a NISSAN dealer for this service.**
- **No changes should be made to the seat belt system. For example, do not modify the seat belt, add material or install devices that may change the seat belt routing or tension. Doing so may affect the operation of the seat belt system. Modifying or tampering with the seat belt system may result in serious personal injury.**
- **Once seat belt pretensioner has activated it cannot protect you in another collision, it cannot be reused and must be replaced together with the retractor and buckle as a unit. It is recommended that you visit a NISSAN dealer for this service.**

- **All seat belt assemblies, including retractors and attaching hardware, should be inspected after any collision. It is recommended you visit a NISSAN dealer for this service. NISSAN recommends that all seat belt assemblies in use during a collision be replaced unless the collision was minor and the belts show no damage and continue to operate properly.**

  Seat belt assemblies not in use during a collision should also be inspected and replaced if either damage or improper operation is noted.
- **All child restraints and attaching hardware should be inspected after any collision. Always follow the restraint manufacturer's inspection instructions and replacement recommendations. The child restraints should be replaced if they are damaged.**

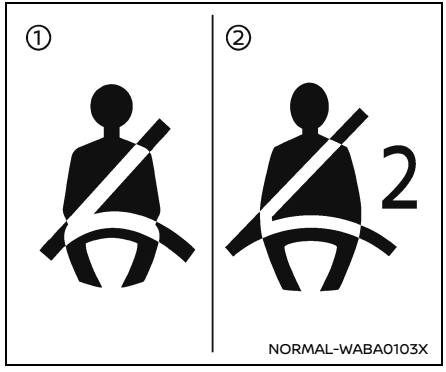

① Seat belt warning indicator for U.S. driver, and Canadian driver and front passenger

② Seat belt warning indicator for U.S. front passenger

SEAT BELT WARNING LIGHT AND CHIME

The driver and front passenger seats are equipped with an enhanced seat belt reminder function. If your vehicle is equipped with an enhanced seat belt reminder function, a visual and audible alert will operate if a driver or front passenger seat belt is unbuckled at speeds of approximately 5 MPH (8km/h) or more (for U.S.) or 10 MPH (15 km/h) or more (for Canada) under the following conditions:

- If the driver seat belt is not fastened.
- The front passenger's seat belt is not fastened and the seat is occupied by a passenger.
- The front passenger's seat belt is not fastened and objects or external force on the passenger seat change the seat belt reminder classification to "occupied".

The seat belt warning light will flash under the conditions shown above until the necessary seat belt is securely fastened.

A warning chime will sound for approximately 95 seconds (for Canada) or until one of the following conditions is met:

- The unbuckled front passenger's seat belt is securely fastened.
- The seat belt reminder function in the front passenger seat no longer detects that the front passenger seat is occupied.
- The ignition switch is turned off.

The below situations could result in the seat belt warning light being illuminated and the chime sounding, even with no occupant present in the passenger seat:

- Heavy objects placed on the seat.

- Someone pushing or pulling on the front passenger seat.
- An object placed under the front passenger seat.
- An object placed between the seat cushion and center console or between the seat cushion and the door.
- An object hanging on the seat or placed in the seatback pocket (If so equipped).
- A child restraint or other object pressing against the rear of the seatback.

PREGNANT WOMEN

NISSAN recommends that pregnant women use seat belts. The seat belt should be worn snug, and always position the lap belt as low as possible around the hips, not the waist, and place the shoulder belt over your shoulder and across your chest. Never run the lap/shoulder belt over your abdominal area. Contact your doctor for specific recommendations.

INJURED PERSONS

NISSAN recommends that injured persons use seat belts, depending on the injury. Check with your doctor for specific recommendations.

THREE-POINT TYPE SEAT BELT

Basic information

WARNING

- **Every person who drives or rides in this vehicle should use a seat belt at all times.**
- **Do not ride in a moving vehicle when the seatback is reclined. This can be dangerous. The shoulder belt will not be against your body. In an accident, you could be thrown into it and receive neck or other serious injuries. You could also slide under the lap belt and receive serious internal injuries.**
- **For the most effective protection when the vehicle is in motion, the seat should be upright. Always sit well back and upright in the seat with both feet on the floor and adjust the seat belt properly.**
- **Do not allow children to play with the seat belts. Most seating positions are equipped with Automatic Locking Retractor (ALR) mode seat belts. If the seat belt becomes wrapped around a child's neck with the ALR mode activated, the child can be seriously injured or killed if the seat belt retracts and becomes tight. This can occur even if the vehicle is parked. Unbuckle the seat belt to release the child. If the seat belt can not be unbuckled or is already unbuckled, release the child by cutting the seat belt with a suitable tool (such as a knife or scissors) to release the seat belt.**

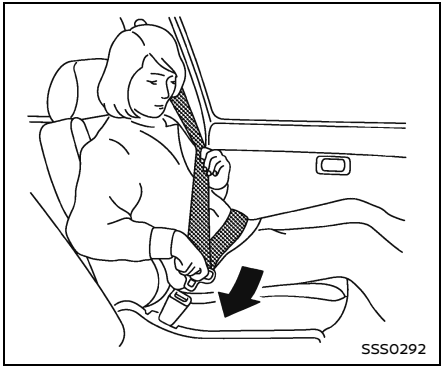
SSS0292

Fastening the seat belts

1. Adjust the seat. (See "Seats" (P.16).)
2. Slowly pull the seat belt out of the retractor and insert the tongue into the buckle until you hear and feel the latch engage.
   - **The retractor is designed to lock during a sudden stop or on impact. A slow pulling motion permits the belt to move, and allows you some freedom of movement in the seat.**
   - **If the seat belt cannot be pulled from its fully retracted position, firmly pull the belt and release it. Then smoothly pull the belt out of the retractor.**

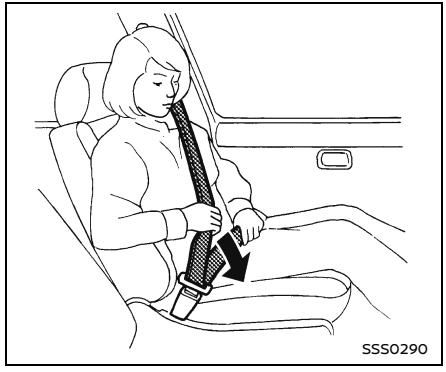
SSS0290

3. Position the lap belt portion **low and snug on the hips** as shown.
4. Pull the shoulder belt portion toward the retractor to take up extra slack. Be sure the shoulder belt is routed over your shoulder and across your chest.

The three-point type seat belts have two modes of operation:

- Emergency Locking Retractor (ELR)
- Automatic Locking Retractor (ALR)

The Emergency Locking Retractor (ELR) mode allows the seat belt to extend and retract to allow the driver and passengers some freedom of movement in the seat. The ELR locks the seat belt when the vehicle slows down rapidly or during impacts.

The Automatic Locking Retractor (ALR) mode (child restraint mode) locks the seat belt for child restraint installation.

Pull the seat belt out until it is fully extended to activate the ALR mode. Detach the seat belt tongue from the buckle and retract the seat belt completely to cancel the ALR mode and revert back to the ELR mode.

When the ALR mode is activated the seat belt cannot be extended again until the seat belt tongue is detached from the buckle and fully retracted. For additional information, see "Child restraints" (P.34).

The ALR mode should be used only for child restraint installation. During normal seat belt use by an occupant, the ALR mode should not be activated. If it is activated it may cause uncomfortable seat belt tension.

⚠ WARNING

When fastening the seat belts, be certain that seatbacks are completely secured in the latched position. If they are not completely secured, passengers may be injured in an accident or sudden stop.

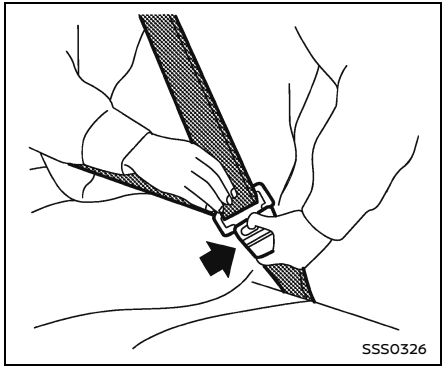

Unfastening the seat belts

To unfasten the seat belt, push the button on the buckle. The seat belt automatically retracts.

Checking seat belt operation

Seat belt retractors are designed to lock seat belt movement by two separate methods:

- When the belt is pulled quickly from the retractor.
- When the vehicle slows down rapidly.

To increase your confidence in the seat belts, check the operation as follows:

- Grasp the shoulder belt and pull forward quickly. The retractor should lock and restrict further belt movement.

If the retractor does not lock during this check, get the system checked. It is recommended you visit a NISSAN dealer for this service, or to learn more about seat belt operation.

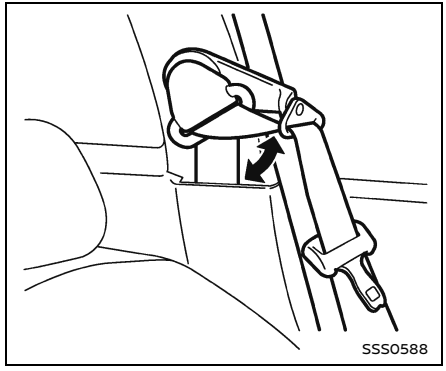

Shoulder belt arm

Before fastening the seat belt, pull the shoulder belt arm forward until it clicks at the detent position.

Pulling the arm forward will allow an easy access to the belt.

SEAT BELT EXTENDERS

If, because of body size or driving position, it is not possible to properly fit the lap-shoulder belt and fasten it, an extender that is compatible with the installed seat belts is available that can be purchased. The extender adds approximately 8 in (200 mm) of length and may be used for either the driver or front passenger seat-

ing position. It is recommended you visit a NISSAN dealer for assistance with purchasing an extender if an extender is required.

⚠ WARNING

- **It is recommended that only NISSAN seat belt extenders, made by the same company which made the original equipment seat belts, be used with the NISSAN seat belts.**
- **Adults and children who can use the standard seat belt should not use an extender. Such unnecessary use could result in serious personal injury in the event of an accident.**
- **Never use seat belt extenders to install child restraints. If the child restraint is not secured properly, the child could be seriously injured or killed in a collision or a sudden stop.**

SEAT BELT MAINTENANCE

- **To clean the seat belt webbings,** apply a mild soap solution or any solution recommended for cleaning upholstery or carpets. Then, wipe with a cloth and allow the seat belts to dry in the shade. Do not allow the seat belts to retract until they are completely dry.
- **If dirt builds up in the shoulder belt guide** of the seat belt anchors, the seat belts may retract slowly. Wipe the shoulder belt guide with a clean, dry cloth.
- **Periodically check to see that the seat belt and the metal components** such as buckles, tongues, retractors, flexible wires and anchors work properly. If loose parts, deterioration, cuts or other damage on the webbing is found, the entire seat belt assembly should be replaced.

CHILD SAFETY

BASIC INFORMATION

⚠ WARNING

Do not allow children to play with the seat belts. Most seating positions are equipped with Automatic Locking Retractor (ALR) mode seat belts. If the seat belt becomes wrapped around a child's neck with the ALR mode activated, the child can be seriously injured or killed if the seat belt retracts and becomes tight. This can occur even if the vehicle is parked. Unbuckle the seat belt to release the child. If the seat belt can not be unbuckled or is already unbuckled, release the child by cutting the seat belt with a suitable tool (such as a knife or scissors) to release the seat belt.

Children need adults to help protect them. They need to be properly restrained.

In addition to the general information in this manual, child safety information is available from many other sources, including doctors, teachers, government traffic safety offices, and community organizations. Every child is different, so be sure to learn the best way to transport your child.

There are three basic types of child restraint systems:

- Rear-facing child restraint
- Front-facing child restraint
- Booster seat

The proper restraint depends on the child's size. Generally, infants (up to about 1 year and less than 20 lb (9 kg)) should be placed in rear-facing child restraints. Front-facing child restraints are available for children who outgrow rear-facing child restraints and are at least 1 year old. Booster seats are used to help position a vehicle lap/shoulder belt on a child who can no longer use a front-facing child restraint.

⚠ WARNING

Infants and children need special protection. The vehicle's seat belts may not fit them properly. The shoulder belt may come too close to the face or neck. The lap belt may not fit over their small hip bones. In an accident, an improperly fitting seat belt could cause serious or fatal injury. Always use appropriate child restraints.

All U.S. states and Canadian provinces or territories require the use of approved child restraints for infants and small children. (See "Child restraints" (P.34).)

Also, there are other types of child restraints available for larger children for additional protection.

INFANTS

Infants up to at least 1 year old should be placed in a rear-facing child restraint. NISSAN recommends that infants be placed in child restraints that comply with Federal Motor Vehicle Safety Standards or Canadian Motor Vehicle Safety Standards. You should choose a child restraint that fits your vehicle and always follow the manufacturer's instructions for installation and use.

SMALL CHILDREN

Children that are over 1 year old and weigh at least 20 lb (9 kg) should remain in a rear-facing child restraint as long as possible up to the height or weight limit of the child restraint. Children who outgrow the height or weight limit of the rear-facing child restraint and are at least 1 year old should be secured in a forward-facing child restraint with a harness. Refer to the manufacturer's instructions for minimum and maximum weight and height recommendations. NISSAN recommends that small children be placed in child restraints that comply with Federal Motor Vehicle Safety Standards or Canadian Motor Vehicle Safety Standards. You should choose a child restraint that fits your vehicle and always follow the manufacturer's instructions for installation and use.

LARGER CHILDREN

Children should remain in a forward-facing child restraint with a harness until they reach the maximum height or weight limit allowed by the child restraint manufacturer.

Once a child outgrows the height or weight limit of the harness-equipped forward-facing child restraint, NISSAN recommends that the child be placed in a commercially available booster seat to obtain proper seat belt fit. For a seat belt to fit properly, the booster seat should raise the child so that the shoulder belt is properly positioned across the chest and the top, middle portion of the shoulder. The shoulder belt should not cross the neck or face and should not fall off the shoulder. The lap belt should lie snugly across the lower hips or upper thighs, not the abdomen.

A booster seat can only be used in seating positions that have a three-point type seat belt. The booster seat should fit the

vehicle seat and have a label certifying that it complies with Federal Motor Vehicle Safety Standards or Canadian Motor Vehicle Safety Standards.

A booster seat should be used until the child can pass the seat belt fit test below:

- Are the child's back and hips against the vehicle seatback?
- Is the child able to sit without slouching?
- Do the child's knees bend easily over the front edge of the seat with feet flat on the floor?
- Can the child safely wear the seat belt (lap belt low and snug across the hips and shoulder belt across mid-chest and shoulder)?
- Is the child able to use the properly adjusted head restraint/headrest?
- Will the child be able to stay in position for the entire ride?



If you answered no to any of these questions, the child should remain in a booster seat using a three-point type seat belt.

NOTE:
Laws in some communities may follow different guidelines. Check local and state regulations to confirm your child is using the correct restraint system before traveling.

⚠ WARNING

Never let a child stand or kneel on any seat and do not allow a child in the cargo area. The child could be seriously injured or killed in a sudden stop or collision.

CHILD RESTRAINTS

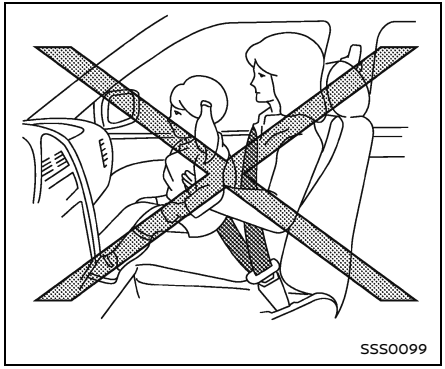
SSS0099

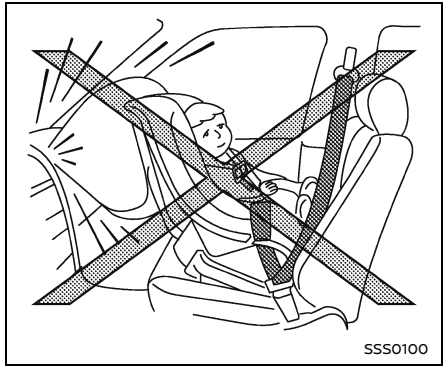
SSS0100

PRECAUTIONS ON CHILD RESTRAINTS

⚠ WARNING

- **Failure to follow the warnings and instructions for proper use and installation of child restraints could result in serious injury or death of a child or other passengers in a sudden stop or collision:**
  - **Always install the child restraint properly and follow the child restraint manufacturer's instructions exactly for installation and use.**
  - **Never install a rear-facing child restraint in the front seat of a vehicle. An inflating front passenger air bag could seriously injure or kill a child improperly placed in the front passenger seat.**
  - **Infants and children should never be held on anyone's lap. Even the strongest adult cannot resist the forces of a collision.**
  - **Do not put a seat belt around both a child and another passenger.**
  - **Even with the NISSAN Advanced Air Bag System, never install a rear-facing child restraint in the front seat. An inflating air bag could seriously injure or kill a child.**
  - **Be sure to purchase a child restraint that will fit the child and vehicle. Some child restraints may not fit properly in your vehicle.**
  - **Child restraint anchor points are designed to withstand loads from child restraints that are properly fitted.**
  - **Never use the anchor points for adult seat belts or harnesses.**

  - **Keep seatbacks as upright as possible after fitting the child restraint.**
  - **Infants and children should always be placed in an appropriate child restraint while in the vehicle.**
- **When the child restraint is not in use, keep it secured with a seat belt. In a sudden stop or collision, loose objects can injure occupants or damage the vehicle.**
- **A child restraint in a closed vehicle can become very hot. Check the seating surface and buckles before placing a child in the child restraint.**

In general, child restraints are designed to be installed with the lap portion of a lap/shoulder seat belt.

Several manufacturers offer child restraints for children of various sizes. When selecting any child restraint, keep the following points in mind:

- Choose only a restraint with a label certifying that it complies with Federal Motor Vehicle Safety Standard 213 or Canadian Motor Vehicle Safety Standard 213.
- Check the child restraint in your vehicle to be sure it is compatible with the vehicle's seat and seat belt system.
- If the child restraint is compatible with your vehicle, place your child in the child restraint and check the various adjustments to be sure the child restraint is compatible with your child. Choose a child restraint that is designed for your child's height and weight. Always follow all recommended procedures.

The passenger seat is not suitable for use with a rear-facing child restraint for infants. Therefore, infants should not be transported in this vehicle.

All U.S. states and Canadian provinces or territories require that infants and small children be restrained in an approved child restraint at all times while the vehicle is being operated. Canadian law requires the top tether strap on front-facing child restraints to be secured to the designated anchor point on the vehicle.

TOP TETHER STRAP CHILD RESTRAINT

Basic information

If the manufacturer of your child restraint requires the use of a top tether strap, it must be secured to an anchor point.

⚠ WARNING

- **Child restraint anchorages are designed to withstand only those loads imposed by correctly fitted child restraints. Under no circumstances are they to be used for adult seat belts, harnesses or for attaching other items or equipment to the vehicle. Doing so could damage the child restraint anchorages. The child restraint will not be properly installed using the damaged anchorage, and a child could be seriously injured or killed in a collision.**
- **Improper installation or failure to properly secure a child restraint can lead to failure of the restraint. The child could be badly injured or killed.**

- **Properly secure cargo and do not allow it to contact the top tether strap when it is attached to the top tether anchor. Cargo that is not properly secured or cargo that contacts the top tether strap may damage the top tether strap during a collision. If the cargo cover contacts the top tether strap when it is attached to the top tether anchor, remove the cargo cover from the vehicle or secure it on the cargo floor below its attachment location. If the cargo cover is not removed, it may damage the top tether strap during a collision. Your child could be seriously injured or killed in a collision if the child restraint top tether strap is damaged.**

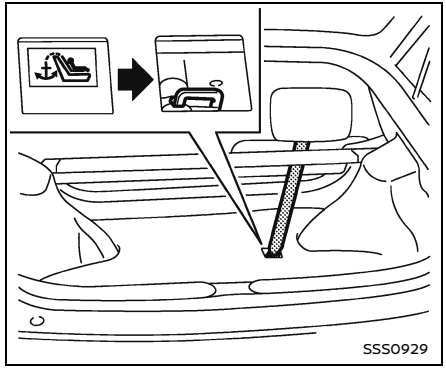

Except for NISMO models

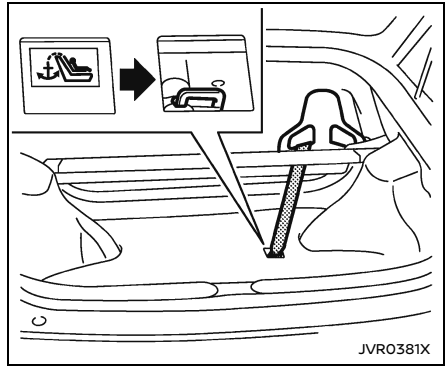

NISMO models

Top tether anchor point location

The anchor point is located on the floor of the cargo area.

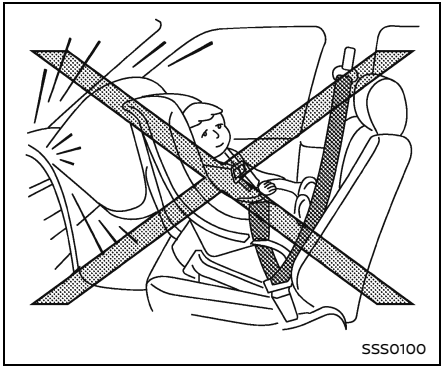

FORWARD-FACING CHILD RESTRAINT INSTALLATION USING THE SEAT BELTS

⚠ WARNING

The three-point seat belt with Automatic Locking Retractor (ALR) must be used when installing a child restraint. Failure to use the ALR mode will result in the child restraint not being properly secured. The restraint could tip over or be loose and cause injury to a child in a sudden stop or collision. Also, it can change the operation of the front passenger air bag. See "Front passenger air bag and status light" (P.51).

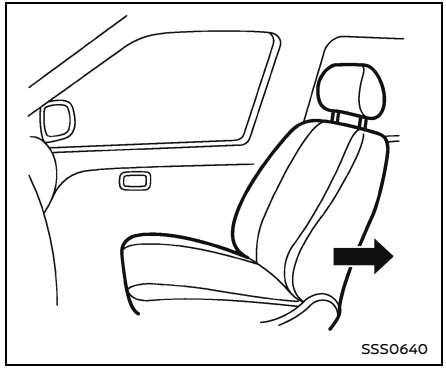

Front-facing (front passenger seat) — step 1

Refer to all Warnings and Cautions in the "Child safety" and "Child restraints" sections before installing a child restraint.

Follow these steps to install a front-facing child restraint using the vehicle seat belt in the front passenger seat:

1. **If you must install a child restraint in the front seat, it should be placed in a front-facing direction only. Move the seat to the rearmost position. Child restraints for infants must be used in the rear-facing direction and therefore must not be used in the front seat.**

2. Position the child restraint on the seat. Always follow the child restraint manufacturer's instructions.

   The back of the child restraint should be secured against the vehicle seatback.

   If necessary, adjust or remove the head restraint/headrest to obtain the correct child restraint fit. If the head restraint/headrest is removed, store it in a secure place. **Be sure to reinstall the head restraint/headrest when the child restraint is removed.** See "Head restraints/headrests (if so equipped)" (P.21) for head restraint adjustment, removal and installation information.

   If the seating position does not have an adjustable head restraint/headrest and it is interfering with the proper child restraint fit, try a different child restraint.

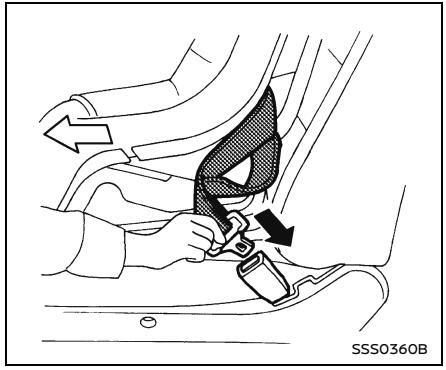

Front-facing — step 3

3. Route the seat belt tongue through the child restraint and insert it into the buckle until you hear and feel the latch engage. Be sure to follow the child restraint manufacturer's instructions for belt routing.

   If the child restraint is equipped with a top tether strap, route the top tether strap and secure the tether strap to the tether anchor point. See "Installing top tether strap" (P.41).

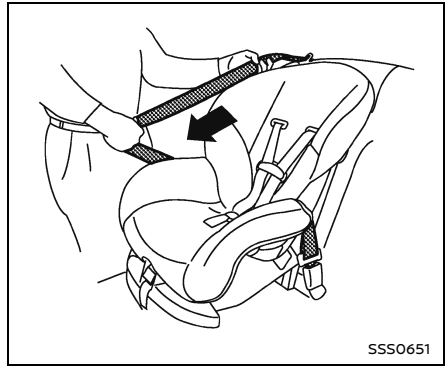

Front-facing — step 4

4. Pull the shoulder belt until the belt is fully extended. At this time, the seat belt retractor is in the Automatic Locking Retractor (ALR) mode (child restraint mode). It reverts to Emergency Locking Retractor (ELR) mode when the seat belt is fully retracted.

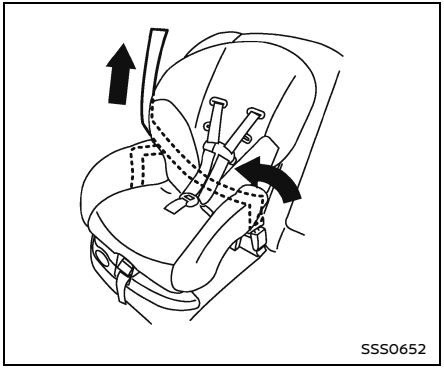

Front-facing — step 5

5. Allow the seat belt to retract. Pull up on the shoulder belt to remove any slack in the belt.

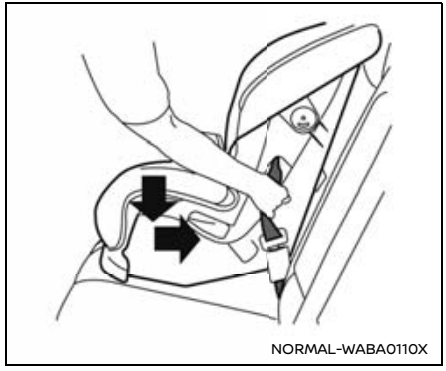

Front-facing — step 6

6. Remove any additional slack from the seat belt; press downward and rearward firmly in the center of the child restraint while pulling up on the seat belt.
7. Tighten the tether strap according to the manufacturer's instructions to remove any slack.

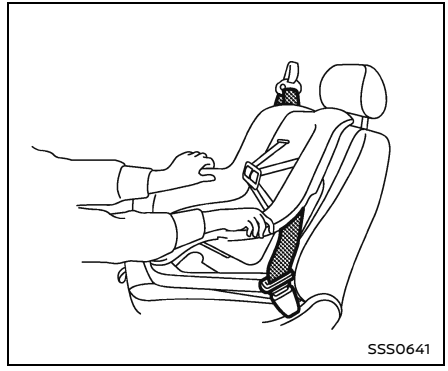

Front-facing — step 8

8. After attaching the child restraint, test it before you place the child in it. Push it from side to side while holding the child restraint near the seat belt path. The child restraint should not move more than 1 inch (25 mm) from side to side. Try to tug it forward and check to see if the belt holds the restraint in place. If the restraint is not secure, tighten the seat belt as necessary, or put the restraint in another seat and test it again. You may need to try a different child restraint. Not all child restraints fit in all types of vehicles.
9. Check to make sure the child restraint is properly secured prior to each use. If

the seat belt is not locked, repeat steps 2 through 8.



Front-facing — step 10

10. If the child restraint is installed in the front passenger seat, push the ignition switch to the ON position. The front passenger air bag status light should illuminate. If this light is not illuminated, see "Front passenger air bag and status light" (P.51). Have the system checked. It is recommended you visit a NISSAN dealer for this service.

After the child restraint is removed and the seat belt is fully retracted, the ALR mode (child restraint mode) is canceled.

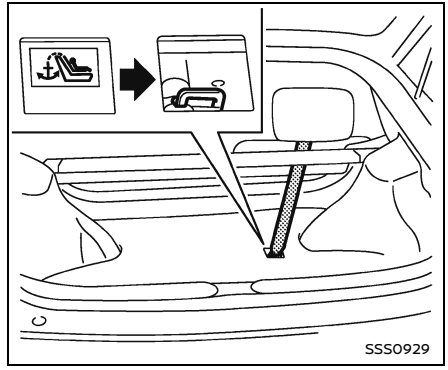

Except for NISMO models

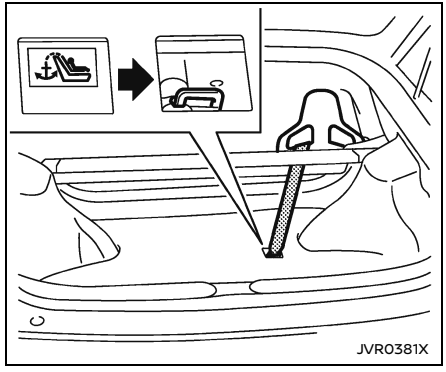

NISMO models

INSTALLING TOP TETHER STRAP

First, secure the child restraint with the seat belt.

1. Flip down the flap marked with a label as shown in the illustration.
2. Position the top tether strap over the top of the seatback and secure it to the tether anchor bracket that provides the straightest installation.
3. Tighten the strap according to the manufacturer's instructions to remove any slack.

⚠ WARNING

Improper installation or failure to properly secure a child restraint can lead to failure of the restraint. The child could be badly injured or killed.

If you have any questions when installing a top tether strap, it is recommended you visit a NISSAN dealer for this service.

BOOSTER SEATS

Precautions on booster seats

⚠ WARNING

If a booster seat and seat belt are not used properly, the risk of a child being injured in a sudden stop or collision greatly increases:

- **Make sure the shoulder portion of the belt is away from the child's face and neck and the lap portion of the belt does not cross the stomach.**
- **Make sure the shoulder belt is not behind the child or under the child's arm.**
- **A booster seat must only be installed in a seating position that has a lap/shoulder belt.**

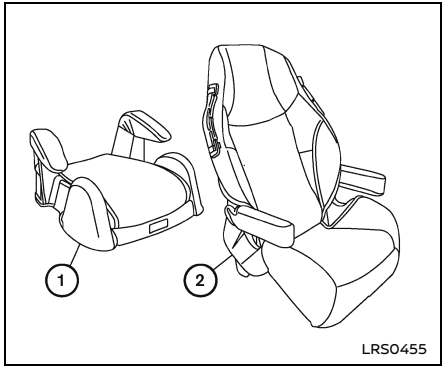

Booster seats of various sizes are offered by several manufacturers. When selecting any booster seat, keep the following points in mind:

- Choose only a booster seat with a label certifying that it complies with Federal Motor Vehicle Safety Standard 213 or Canadian Motor Vehicle Safety Standard 213.

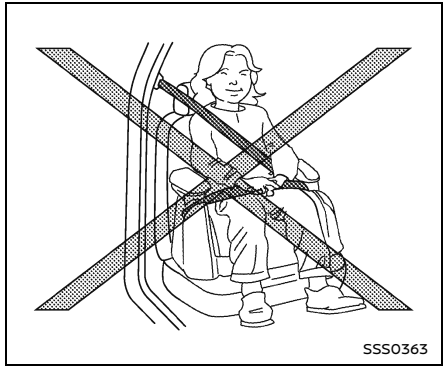

- Check the booster seat in your vehicle to be sure it is compatible with the vehicle's seat and seat belt system.
- Make sure the child's head will be properly supported by the booster seat or vehicle seat. The seatback must be at or above the center of the child's ears. For example, if a low back booster seat ① is chosen, the vehicle seatback must be at or above the center of the child's ears. If the seatback is lower than the center of the child's ears, a high back booster seat ② should be used.

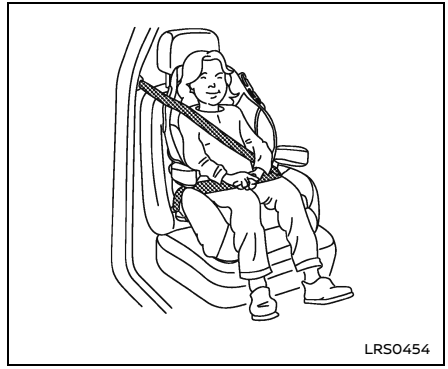

- If the booster seat is compatible with your vehicle, place your child in the booster seat and check the various adjustments to be sure the booster seat is compatible with your child.

  Always follow all recommended procedures.

All U.S. states and Canadian provinces or territories require that infants and small children be restrained in an approved child restraint at all times while the vehicle is being operated.

The instructions in this section apply to booster seat installation in the front passenger seat.

Booster seat installation

WARNING

To avoid injury to child, do not use the lap/shoulder belt Automatic Locking Retractor (ALR) mode when using a booster seat with the seat belts.

Refer to all Warnings and Cautions in the "Child safety", "Child restraints" and "Booster seats" sections earlier in this section before installing a child restraint.

Follow these steps to install a booster seat in the front passenger seat:

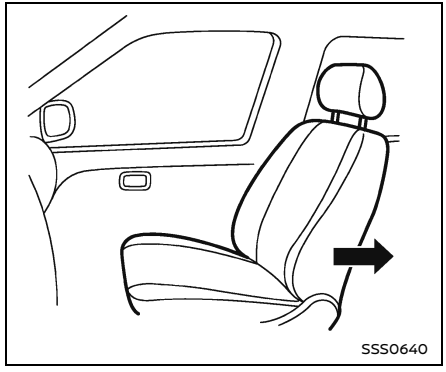
SSS0640

1. **If you must install a booster seat in the front seat, adjust the seatback so that it is upright and then move the seat to the rearmost position. Do not move the seat with the booster seat attached to it.**
2. Position the booster seat on the seat. Only place it in a front-facing direction. Always follow the booster seat manufacturer's instructions.

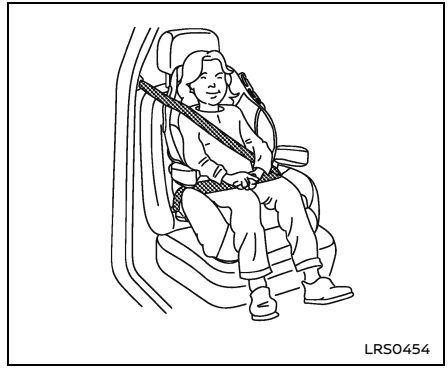
LRS0454

3. The booster seat should be positioned on the vehicle seat so that it is stable.

   If necessary, adjust or remove the head restraint/headrest to obtain the correct booster seat fit. If the head restraint/headrest is removed, store it in a secure place. **Be sure to reinstall the head restraint/headrest when the booster seat is removed.** See "Head restraints/headrests (if so equipped)" (P.21) for head restraint adjustment, removal and installation information.

   If the seating position does not have an adjustable head restraint/headrest and it is interfering with the proper

booster seat fit, try a different booster seat.

4. Position the lap portion of the seat belt low and snug on the child's hips. Be sure to follow the booster seat manufacturer's instructions for adjusting the belt routing.
5. Pull the shoulder belt portion of the seat belt toward the retractor to take up extra slack. Be sure the shoulder belt is positioned across the top, middle portion of the child's shoulder. Be sure to follow the booster seat manufacturer's instructions for adjusting the belt routing.
6. Follow the warnings, cautions and instructions for properly fastening a seat belt shown in the "Three-point type seat belt" (P.28).



7. If the booster seat is installed in the front passenger seat, push the ignition switch to the ON position. The front passenger air bag status light may or may not illuminate depending on the size of the child and the type of booster seat used. (See "Front passenger air bag and status light" (P.51).)

SUPPLEMENTAL RESTRAINT SYSTEM

PRECAUTIONS ON SUPPLEMENTAL RESTRAINT SYSTEM

This Supplemental Restraint System (SRS) section contains important information concerning the following systems.

- Driver and passenger supplemental front-impact air bag (NISSAN Advanced Air Bag System)
- Front seat-mounted side-impact supplemental air bag
- Roof-mounted curtain side-impact and rollover supplemental air bag
- Seat belt with pretensioner

Supplemental front-impact air bag system: The NISSAN Advanced Air Bag System can help cushion the impact force to the head and chest of the driver and front passenger in certain frontal collisions.

Front seat-mounted side-impact supplemental air bag system: This system can help cushion the impact force to the chest and pelvis area of the driver and front passenger in certain side impact collisions. The front seat side-impact supplemental air bags are designed to inflate on the side where the vehicle is impacted.

Roof-mounted curtain side-impact and rollover supplemental air bag system: This system can help cushion the impact force to the head of the driver and front passenger in certain side-impact or roll-

over collisions. In a side-impact, the curtain air bags are designed to inflate on the side where the vehicle is impacted. In a rollover, curtain air bags on both sides are designed to inflate and remain inflated for a short time.

Curtain air bags are also designed to inflate in certain types of rollover collisions or near rollovers. As a result, certain vehicle movements may cause the curtain air bags to inflate.

These supplemental restraint systems are designed to **supplement** the crash protection provided by the driver and passenger seat belts and are **not a substitute** for them. Seat belts should always be correctly worn and the occupant seated a suitable distance away from the steering wheel, instrument panel and door finishers. (See "Seat belts" (P.24) for instructions and precautions on seat belt usage.)

The supplemental air bags operate only when the ignition switch is in the ON position.

After pushing the ignition switch to the ON position, the supplemental air bag warning light illuminates. The supplemental air bag warning light will turn off after about 7 seconds if the systems are operational.

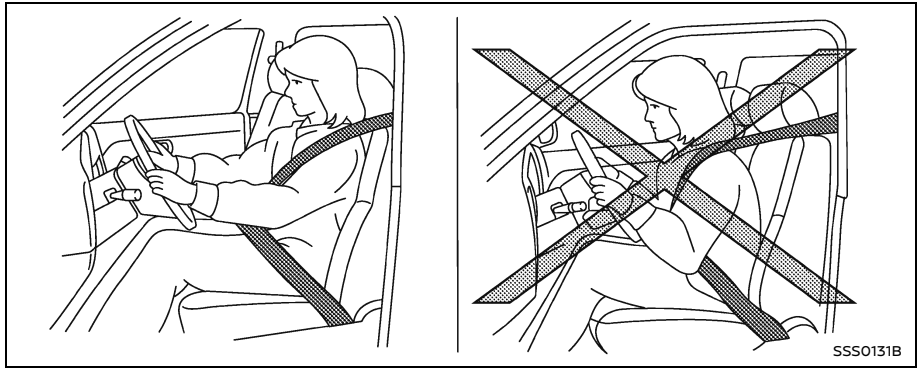
SSS0131B

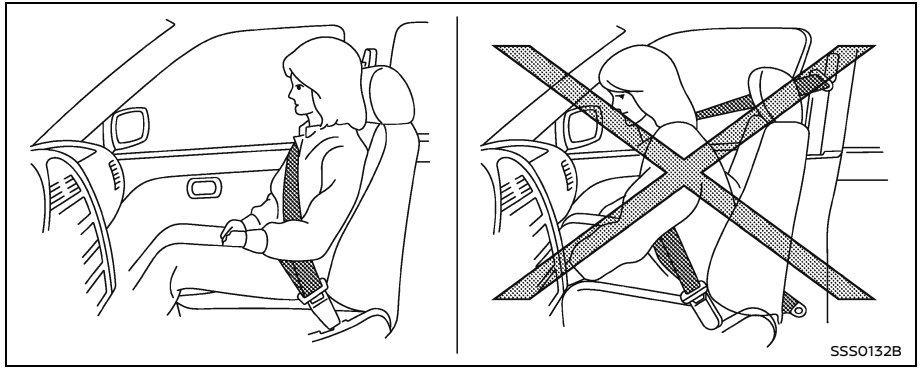
SSS0132B

⚠ WARNING

- **The front air bags ordinarily will not inflate in the event of a side impact, rear impact, rollover, or lower severity frontal collision. Always wear your seat belts to help reduce the risk or severity of injury in various kinds of accidents.**
- **The front passenger air bag will not inflate if the front passenger air bag status light is lit or if the front passenger seat is unoccupied. See "Front passenger air bag and status light" (P.51).**
- **The seat belts and the front air bags are most effective when you are sitting well back and upright in the seat with both feet on the floor. The front air bags inflate with great force. Even with the NISSAN Advanced Air Bag System, if you are unrestrained, leaning forward, sitting sideways or out of position in any way, you are at greater risk of injury or death in a crash. You may also receive serious or fatal injuries from the supplemental front air bag if you are up against it when it inflates. Always sit back against the seatback and as far-away as practical from the steering wheel or instrument panel. Always use the seat belts.**
- **The driver and front passenger seat belt buckles are equipped with sensors that detect if the seat belts are fastened. The Advanced Air Bag System monitors the severity of a collision and seat belt usage then inflates the air bags. Failure to properly wear seat belts can increase the risk or severity of injury in an accident.**
- **The front passenger seat is equipped with an occupant classification sensor (pattern sensor) that turns the front passenger air bag OFF under some conditions. This sensor is only used in this seat. Failure to be properly seated and wearing the seat belt can increase the risk or severity of injury in an accident. See "Front passenger air bag and status light" (P.51).**
- **Do not position your arm across the center of the steering wheel while driving, keep hands on the outside of the steering wheel. Placing them inside the steering wheel rim could increase the risk that they are injured when the front air bag inflates.**

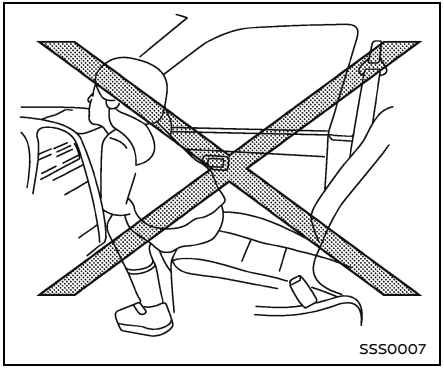
SSS0007

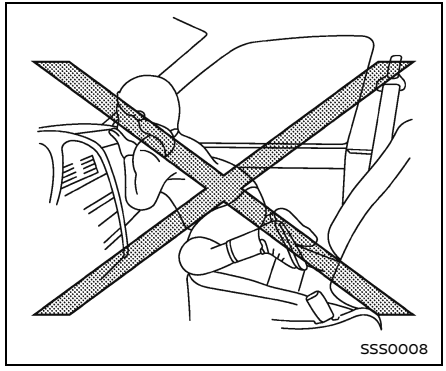
SSS0008

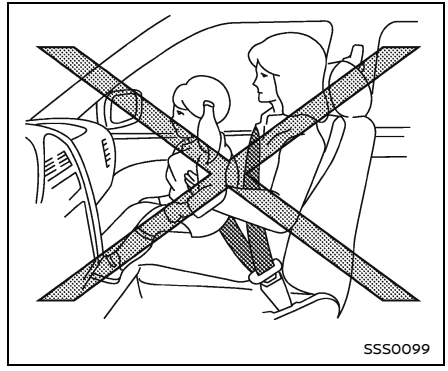
SSS0099

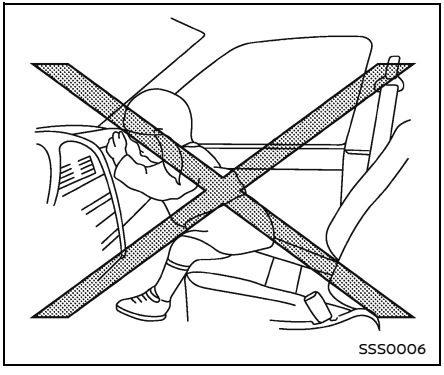
SSS0006

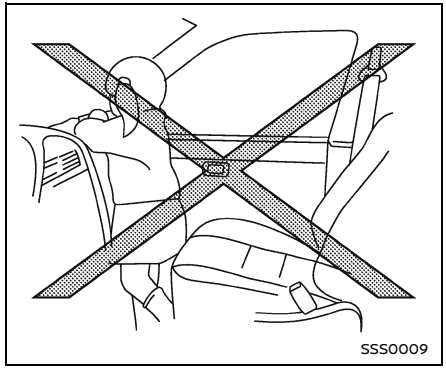
SSS0009

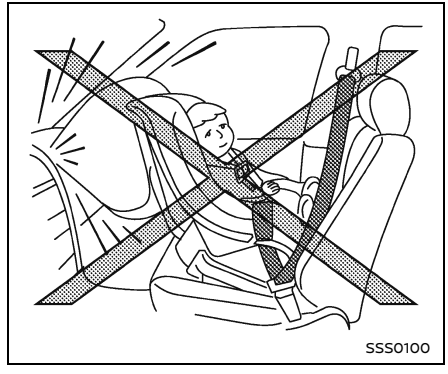
SSS0100

⚠ WARNING

- **To prevent serious injury or death never let children ride unrestrained or extend their hands or face out of the window. Do not attempt to hold them in your lap or arms. Some examples of dangerous riding positions are shown in the illustrations.**
- **Children may be severely injured or killed when the front air bags, side air bags or curtain air bags inflate if they are not properly restrained.**
- **Even with the NISSAN Advanced Air Bag System, never install a rear-facing child restraint in the front seat. An inflating front air bag could seriously injure or kill your child. See "Child restraints" (P.34) for details.**

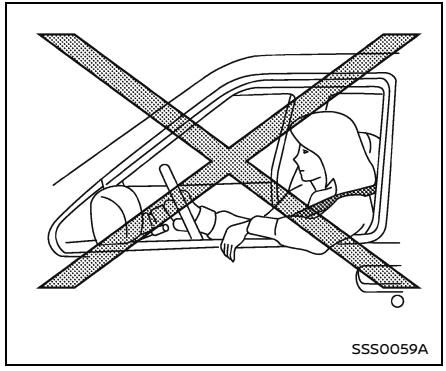
SSS0059A

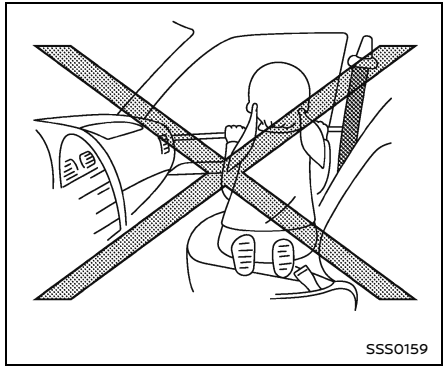
SSS0159

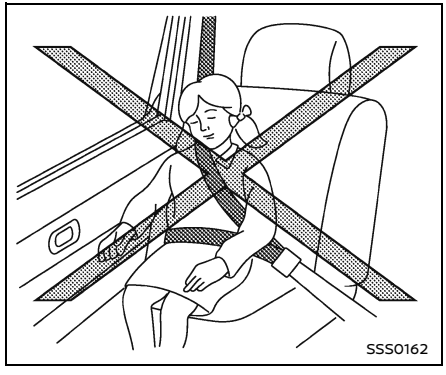
SSS0162

⚠ WARNING

Front seat-mounted side-impact supplemental air bags, roof-mounted curtain side-impact and rollover supplemental air bag:

- **The side air bags ordinarily will not inflate in the event of a front impact, rear impact, rollover, or lower severity side collision. Always wear your seat belts to help reduce the risk or severity of injury in various kinds of accidents.**

- **The curtain air bags ordinarily will not inflate in the event of a front impact, rear impact or lower severity side collision. Always wear your seat belts to help reduce the risk or severity of injury in various kinds of accidents.**
- **The seat belts, side air bags and curtain air bags are most effective when you are sitting well back and upright in the seat. The side air bag and curtain air bag inflate with great force. To minimize the risk of severe injury or death in the event of a crash, do not allow anyone to place their hand, leg or face near the side air bag on the side of the seatback of the front seat or near the side roof rails. Do not allow anyone sitting in the front seats to extend their hand out of the window or lean against the door. Some examples of dangerous riding positions are shown in the previous illustrations.**
- **Do not use seat covers on the front seatbacks. They may interfere with side air bag inflation causing serious injury or death.**

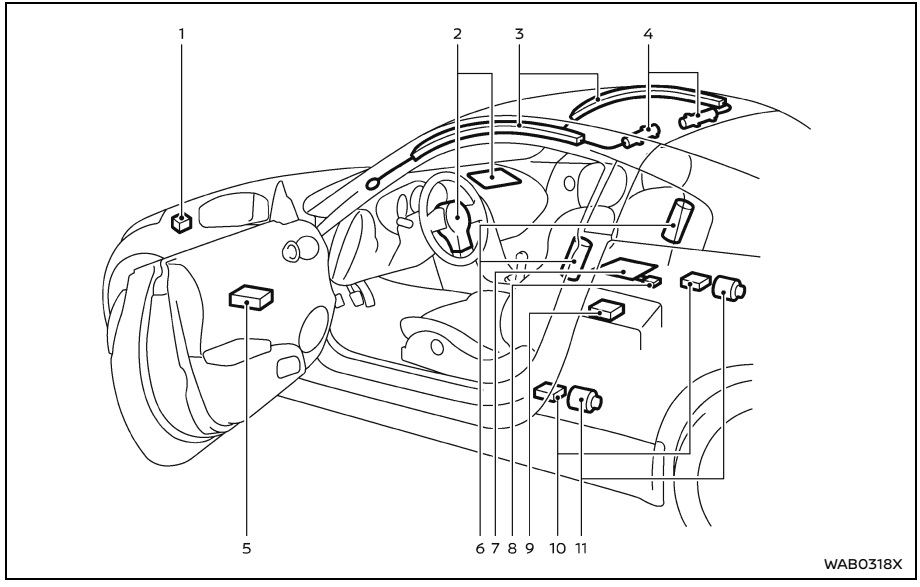

1. Crash zone sensor
2. Supplemental front air bag modules (NISSAN Advanced Air Bags)
3. Roof-mounted curtain side-impact and rollover supplemental air bags
4. Roof-mounted curtain side-impact and rollover supplemental air bag inflators
5. Door satellite sensors
6. Front seat-mounted side-impact supplemental air bags
7. Occupant classification sensor (pattern sensor)

8. Occupant classification system control unit
9. Air bag Control Unit (ACU)
10. Satellite sensors
11. Seat belt with pretensioner

NISSAN ADVANCED AIR BAG SYSTEM (front seats)

Basic information

This vehicle is equipped with the NISSAN Advanced Air Bag System for the driver and front passenger seats. This system is designed to meet certification requirements under U.S. regulations. It is also permitted in Canada. **All of the information, cautions and warnings in this manual apply and must be followed.**

The driver supplemental front-impact air bag is located in the center of the steering wheel. The front passenger supplemental front-impact air bag is mounted in the instrument panel above the glove box. The front air bags are designed to inflate in higher severity frontal collisions, although they may inflate if the forces in another type of collision are similar to those of a higher severity frontal impact. They may not inflate in certain frontal collisions. Vehicle damage (or lack of it) is not always an indication of proper front air bag operation.

The vehicle's front air bag sensor system is designed to detect rapid deceleration usually associated with moderate to higher-severity frontal collisions within a limited range of angles. Air bags are not designed to deploy in low-severity collisions. The vehicle's deceleration rate is related to various factors, such as speed of the vehicles, the weight and stiffness of the vehicles/objects involved, contact locations, and the angle of impact.

The NISSAN Advanced Air Bag System has dual stage air bag inflators. The system monitors information from the crash zone sensor, the Air bag Control Unit (ACU), seat belt buckle switches and the occupant classification sensor (pattern sensor). Inflator operation is based on the severity of a collision and seat belt usage for the driver. For the front passenger, the occupant classification sensor is also monitored. Based on information from the sensors, only one front air bag may inflate in a crash, depending on the crash severity and whether the front occupants are belted or unbelted. Additionally, the front passenger air bag may be automatically turned OFF under some conditions, depending on the information provided by the occupant classification sensor. If the front passenger air bag is OFF, the front passenger air bag status light will be illuminated (if the seat is unoccupied, the light will not be illuminated, but the air bag will be off). (See "Front passenger air bag and status light" (P.51) for further details.) One front air bag inflating does not indicate improper performance of the system.

If you have any questions about your air bag system, it is recommended you visit a NISSAN dealer to obtain information about the system. If you are considering modification of your vehicle due to a disability, you may also contact a NISSAN dealer. Contact information is contained in the front of this Owner's Manual.

When a front air bag inflates, a fairly loud noise may be heard, followed by release of smoke. This smoke is not harmful and does not indicate a fire. Care should be taken not to inhale it, as it may cause irritation and choking. Those with a history of a breathing condition should get fresh air promptly.

Front air bags, along with the use of seat belts, help to cushion the impact force on the head and chest of the front occupants. They can help save lives and reduce serious injuries. However, an inflating front air bag may cause facial abrasions or other injuries. Front air bags do not provide restraint to the lower body.

Even with NISSAN advanced air bags, seat

belts should be correctly worn and the driver and passenger seated upright as far as practical away from the steering wheel or instrument panel. The front air bags inflate quickly in order to help protect the front occupants. Because of this, the force of the front air bag inflating can increase the risk of injury if the occupant is too close to, or is against, the air bag module during inflation.

The front air bags deflate quickly after a collision.

The supplemental front air bags operate only when the ignition switch is in the ON position.

After pushing the ignition switch to the ON position, the supplemental air bag warning light illuminates. The supplemental air bag warning light will turn off after about 7 seconds if the system is operational.



Front passenger air bag status light

Front passenger air bag and status light

⚠ WARNING

The front passenger air bag is designed to automatically turn OFF under some conditions. Read this section carefully to learn how it operates. Proper use of the seat, seat belt and child restraints is necessary for most effective protection. Failure to follow all instructions in this manual concerning the use of seats, seat belts and child restraints can increase the risk or severity of injury in an accident.

Status light:

The front passenger air bag status light is located above the inside mirror. After the ignition switch is placed in the ON position, the front passenger air bag status light illuminates for about 7 seconds and then turns off or illuminates depending on the front passenger seat occupied status. The light operates as follows:

- Unoccupied front passenger seat: The is OFF and the front passenger air bag is OFF and will not inflate in a crash.

- Front passenger seat occupied by a small adult, child or child restraint as outlined in this section: The illuminates to indicate that the front passenger air bag is OFF and will not inflate in a crash.
- Occupied front passenger seat and the front passenger meets the conditions outlined in this section: The light is OFF to indicate that the front passenger air bag is operational.

Front passenger air bag:

The front passenger air bag is designed to automatically turn OFF when the vehicle is operated under some conditions as described below as permitted by U.S. regulations. If the front passenger air bag is OFF, it will not inflate in a crash. The driver air bag and other air bags in your vehicle are not part of this system.

The purpose of the regulation is to help reduce the risk of injury or death from an inflating air bag to certain front passenger seat occupants, such as children, by requiring the air bag to be automatically turned OFF.

The occupant classification sensor (pattern sensor) is in the front passenger seat cushion and is designed to detect an occupant and objects on the seat. For example, if a child is in the front passenger seat, the Advanced Air Bag System is designed to turn the front passenger air bag OFF in accordance with the regulations. Also, if a child restraint of the type specified in the regulations is on the seat, the occupant classification sensor can detect it and cause the air bag to turn OFF.

Front passenger seat adult occupants who are properly seated and using the seat belt as outlined in this manual should not cause the front passenger air bag to be automatically turned OFF. For small adults it may be turned OFF, however, if the occupant does not sit in the seat properly (for example, by not sitting upright, by sitting on an edge of the seat, or by otherwise being out of position), this could cause the sensor to turn the air bag OFF. Always be sure to be seated and wearing the seat belt properly for the most effective protection by the seat belt and supplemental air bag.

The occupant classification sensor is designed to operate as described above to turn the front passenger air bag OFF for specified child restraints. Failing to properly secure child restrains and to use the ALR mode (child restraint mode) may allow the restraint to tip or move in an accident or sudden stop. This can also result in the front passenger air bag inflating in a crash instead of being OFF. (See "Child restraints" (P.34) for proper use and installation.)

If the front passenger seat is not occupied, the front passenger air bag is designed not to inflate in a crash. However, heavy objects placed on the seat could result in air bag inflation, because of the object being detected by the occupant classification sensor. Other conditions could also result in air bag inflation, such as if a child is standing on the seat, or if two children are on the seat, contrary to the instructions in this manual. Always be sure that you and all vehicle occupants are seated and restrained properly.

Using the front passenger air bag status light, you can monitor when the front passenger air bag is automatically turned OFF with the seat occupied. The light will not illuminate when the front passenger seat is unoccupied.

If an adult occupant is in the seat but the front passenger air bag status light is illuminated (indicating that the air bag is OFF), it could be that the person is a small adult, or is not sitting on the seat properly.

If a child restraint must be used in the front seat, the front passenger air bag status light may or may not be illuminated, depending on the size of the child

and the type of child restraint being used.

⚠ WARNING

If the front passenger air bag status light is not illuminated (indicating that the air bag might inflate in a crash), it could be that the child restraint or seat belt is not being used properly. To avoid serious injury or death, make sure that the child restraint is installed properly, the seat belt is used properly, and the occupant is positioned properly. If the front passenger air bag status light is still not illuminated, try a different child restraint. Never use a rear facing child restraint in the front seat.

If the front passenger air bag status light will not illuminate even though you believe that the front facing child restraint, the seat belts and the occupant are properly positioned, the system may be sensing an unoccupied seat (in which case the air bag is OFF). Your NISSAN dealer can check that the system is OFF by using a special tool. However, until you have confirmed with your dealer that your air bag is working properly, do not transport a child in this vehicle.

The NISSAN Advanced Air Bag System and front passenger air bag status light will take a few seconds to register a change in the front passenger seat status. However, if the seat becomes unoccupied, the front passenger air bag status light will remain off.

If a malfunction occurs in the front passenger air bag system, the supplemental air bag warning light , located in the meter and gauges area will blink. Have the system checked. It is recommended you visit a NISSAN dealer for this service.

Other supplemental front-impact air bag precautions

⚠ WARNING

To avoid risk of serious injury or death:

- **Do not place any objects on the steering wheel pad or on the instrument panel. Also, do not place any objects between any occupant and the steering wheel or instrument panel. Such objects may become dangerous projectiles and cause injury if the front air bag inflates.**
- **Do not place objects with sharp edges on the seat. Also, do not place heavy objects on the seat that will leave permanent impressions in the seat. Such objects can damage the seat or occupant classification sensor (pattern sensor). This can affect the operation of the air bag system.**
- **Do not use water or acidic cleaners (hot steam cleaners) on the seat. This can damage the seat or occupant classification sensor. This can also affect the operation of the air bag system.**
- **Immediately after inflation, several front air bag system components will be hot. Do not touch them; you may severely burn yourself.**
- **No unauthorized changes should be made to any components or wiring of the air bag system. This is to prevent accidental inflation of the supplemental air bag or damage to the supplemental air bag system.**

- **After a collision, NISSAN recommends that you have the seat belts and the air bag system in your vehicle inspected, and any necessary components replaced by a NISSAN dealer as soon as possible.**
- **No unauthorized changes should be made to any components or the SRS wiring or your vehicle's electrical system, suspension system, or front end structure. The SRS wiring harnesses should not be modified or disconnected. Unauthorized electrical test equipment and probing devices should not be used on the air bag system. This could affect proper operation of the front air bag system.**
- **Removing or modifying the front passenger seat may affect the function of the air bag system and result in serious personal injury.**
- **Tampering with the front air bag system may result in serious personal injury. Tampering includes changes to the steering wheel and the instrument panel assembly by placing material over the steering wheel pad and above the instrument panel or by installing additional trim material around the air bag system.**
- **Modifying or tampering with the front passenger seat may result in serious personal injury. For example, do not change the front seats by placing material on the seat cushion or by installing additional trim material, such as seat covers, on the seat that is not specifically designed to assure proper air bag operation. Additionally, do not stow any objects under the front passenger seat or the seat cushion and seatback. Such objects may interfere with the proper operation of the occupant classification sensor.**
- **No unauthorized changes should be made to any components or wiring of the seat belt system. This may affect the front air bag system. Tampering with the seat belt system may result in serious personal injury.**
- **It is recommended you visit a NISSAN dealer for work on and around the front air bag. It is also recommended you visit a NISSAN dealer for installation of electrical equipment. The Supplemental Restraint System (SRS) wiring harnesses* should not be modified or disconnected. Unauthorized electrical test equipment and probing devices should not be used on the air bag system.**
- **A cracked windshield should be replaced immediately by a qualified repair facility. A cracked windshield could affect the function of the supplemental air bag system.**

* **The SRS wiring harness connectors are yellow and orange for easy identification.**

When selling your vehicle, we request that you inform the buyer about the front air

bag system and guide the buyer to the appropriate sections in this Owner's Manual.

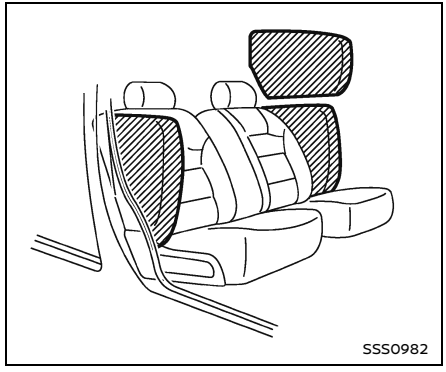
SSS0982

FRONT SEAT-MOUNTED SIDE-IMPACT AND ROOF-MOUNTED CURTAIN SIDE-IMPACT AND ROLL-OVER SUPPLEMENTAL AIR BAG SYSTEMS

The side air bags are located in the outside of the seatback of the front seats. The curtain air bags are located in the side roof rails. **All of the information, cautions and warnings in this manual apply and must be followed.** The side air bags and curtain air bags are designed to inflate in higher severity side collisions, although they may inflate if the forces in another type of collision are similar to those of a higher severity side impact. They are designed to inflate on the side where the vehicle is impacted. They may not inflate in certain side collisions.

Roof-mounted curtain air bags are also designed to inflate in certain types of rollover collisions or near rollovers. As a result, certain vehicle movements may cause the curtain air bags to inflate.

Vehicle damage (or lack of it) is not always an indication of proper supplemental side air bag and curtain air bag operation.

When side air bags and curtain air bags inflate, a fairly loud noise may be heard, followed by release of smoke. This smoke is not harmful and does not indicate a fire. Care should be taken not to inhale it, as it may cause irritation and choking. Those with a history of a breathing condition should get fresh air promptly.

Side air bags, along with the use of seat belts, help to cushion the impact force on the chest and pelvis of the front occupants. Curtain air bags help to cushion the impact force to the head of occupants. They can help save lives and reduce serious injuries. However, inflating side air bags and curtain air bags may cause abrasions or other injuries. Side air bags and curtain air bags do not provide restraint to the lower body.

The seat belts should be correctly worn

and the driver and passenger seated upright as far as practical away from the side air bag, and seated as far away as practical from the door finishers and side roof rails. The side air bags and curtain air bags inflate quickly in order to help protect the occupants. Because of this, the force of the side air bags and curtain air bags inflating can increase the risk of injury if the occupant is too close to, or is against, these air bag modules during inflation. The side air bags and curtain air bags will remain inflated for a short period of time. In a rollover, the curtain air bags on both side-impact situations, the curtain air bags will remain inflated for a short period of time.

The side air bags and curtain air bags operate only when the ignition switch is in the ON position.

After placing the ignition switch in the ON position, the supplemental air bag warning light illuminates. The air bag warning light will turn off after about 7 seconds if the systems are operational.

⚠ WARNING

To avoid risk of serious injury or death:

- **Do not place any objects near the seatback of the front seats. Also, do not place any objects (an umbrella, bag, etc.) between the front door finisher and the front seat. Such objects may become dangerous projectiles and cause injury if a side air bag inflates.**
- **Right after inflation, several side air bags and curtain air bag system components will be hot. Do not touch them; you may severely burn yourself.**
- **No unauthorized changes should be made to any components or wiring of side air bag and curtain air bag systems. This is to prevent accidental inflation of the side air bag and curtain air bag or damage to side air bag and curtain air bag systems.**
- **Do not make unauthorized changes to your vehicle's electrical system, suspension system or side panel. This could affect proper operation of the side air bag and curtain air bag systems.**
- **Tampering with the air bag system may result in serious personal injury. For example, do not change the front seats by placing material near the seatback or by installing additional trim material, such as seat covers, around the side air bags.**
- **It is recommended you visit a NISSAN dealer for work on and around the pretensioner system. It is also recommended you visit a NISSAN dealer for installation of electrical equipment. The SRS wiring harnesses* should not be modified or disconnected. Unauthorized electrical test equipment and probing devices should not be used on the side-impact air bag system.**

* **The SRS wiring harness connectors are yellow and orange for easy identification.**

When selling your vehicle, we request that you inform the buyer about the side air bag and curtain air bag systems and guide the buyer to the appropriate sections in this Owner's Manual.

SEAT BELTS WITH PRETENSIONERS (front seats)

⚠ WARNING

To avoid risk of serious injury or death:

- **Deployed seat belt pretensioner(s) cannot protect you in another collision. Once a seat belt pretensioner has activated, it cannot be reused and must be replaced together with the retractor and buckle as a unit.**
- **If the vehicle becomes involved in a collision but a pretensioner is not activated, be sure to have the pretensioner system checked and, if necessary, replaced. It is recommended you visit a NISSAN dealer for this service.**
- **No unauthorized changes should be made to any components or wiring of the pretensioner system. This is to prevent damage to or accidental activation of the pretensioners. Tampering with the pretensioner system may result in serious personal injury.**
- **It is recommended you visit a NISSAN dealer for work on and around the pretensioner system. It is also recommended you visit a NISSAN dealer for installation of electrical equipment. Unauthorized electrical test equipment and probing devices should not be used on the pretensioner system.**
- **If you need to dispose of the pretensioner or scrap the vehicle, it is recommended you visit a NISSAN dealer for this service. Correct pretensioner disposal procedures are set forth in the appropriate NISSAN Service Manual. Incorrect disposal procedures could cause personal injury.**

The pretensioner system may activate with the supplemental air bag system in certain types of collisions. Working with the seat belt retractor, it helps tighten the seat belt when the vehicle becomes involved in certain types of collisions, helping to restrain front seat occupants.

The pretensioner is encased with the seat belt retractor. These seat belts are used the same way as conventional seat belts.

When a pretensioner seat belt activates, smoke is released and a loud noise may be heard. The smoke is not harmful, and it does not indicate a fire. Care should be taken not to inhale it as it may cause irritation and choking. Those with a history of a breathing condition should get fresh air promptly.

After pretensioner activation, load limiters allow the seat belt to release webbing (if necessary) to reduce forces against the chest.

The supplemental air bag warning light is used to indicate malfunctions in the pretensioner system. (See "Supplemental air bag warning light" (P.61) for more details.) If the operation of the supplemental air bag warning light indicates there is a malfunction, have the system checked. It is recommended you visit a NISSAN dealer for this service.

When selling your vehicle, we request that you inform the buyer about the seat belt pretensioners and guide the buyer to the appropriate sections in this Owner's Manual.

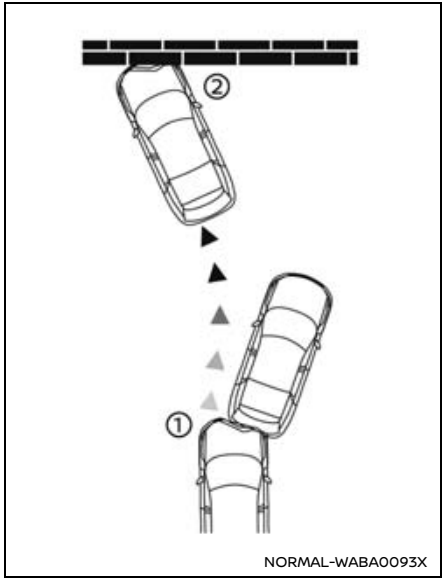

NORMAL-WABA0093X

AN AIR BAG ONLY WORKS ONCE

Basic information

In a multiple-impact collision, air bags help protect only during the first impact severe enough to activate the system.

If, as in the illustration above, for example, the collision labeled ① were severe enough to activate the front air bags, the front air bags would not be reactivated in collision ②.

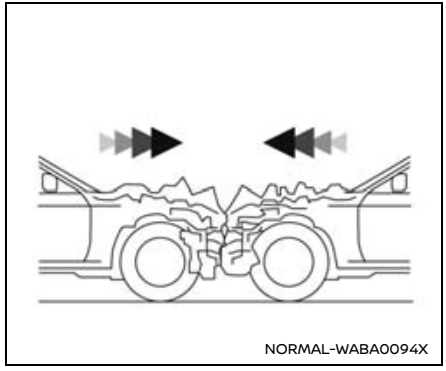
NORMAL-WABA0094X

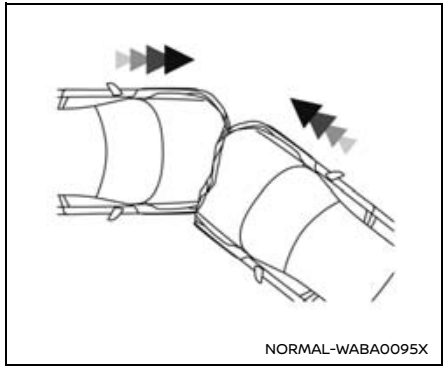
NORMAL-WABA0095X

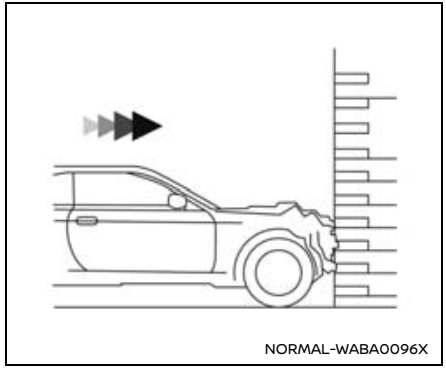
NORMAL-WABA0096X

Frontal collisions

A severe frontal head-on or angled collision involving another vehicle or object, probably will activate the front air bags. Depending on the specific impact, the side and curtain air bags may also activate in this type of collision.

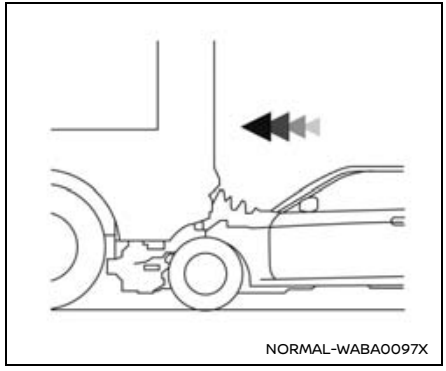
NORMAL-WABA0097X

If the front end of your car should go under a vehicle, the impact may not activate the front air bags.

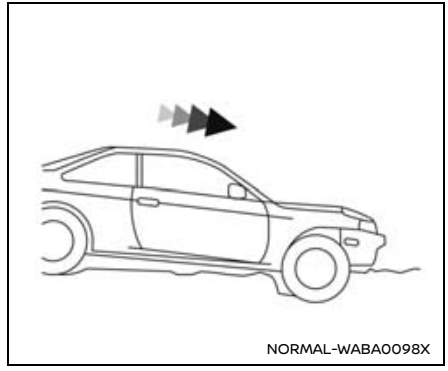
NORMAL-WABA0098X

If your vehicle should strike an object in the road, such as a rock, debris or hole, the front air bags may or may not activate, depending on the specific impact.

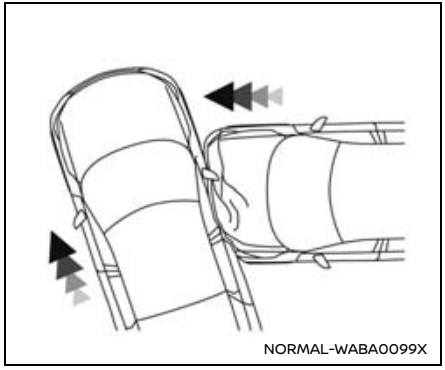
NORMAL-WABA0099X

Side, rear and rollover collisions

The side air bags and curtain air bags are designed to inflate in higher severity side collisions, although they may inflate if the forces in another type of collision are similar to those of a higher severity side impact. They are designed to inflate on the side where the vehicle is impacted.

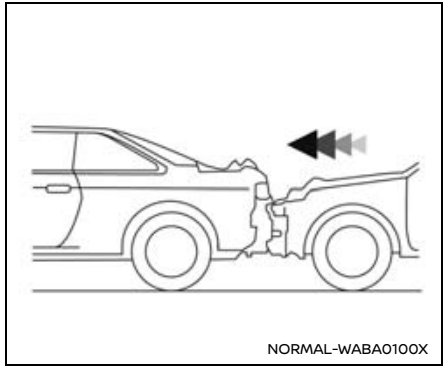
NORMAL-WABA0100X

The front, side and curtain air bags ordinarily will not inflate in the event your vehicle is struck from the rear.

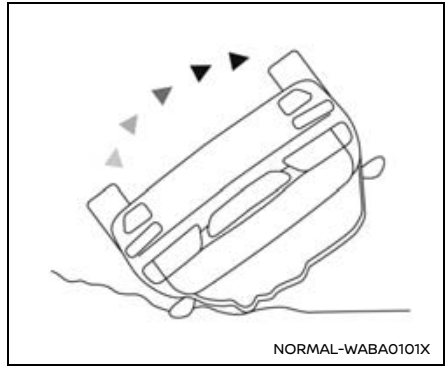
NORMAL-WABA0101X

The curtain air bags on both sides of the vehicle and the front central side air bag (if so equipped) are designed to activate in certain types of rollover collisions or near rollovers. This function is in addition to the side impact protection function described above. The front air bags are not likely to activate in this situation.

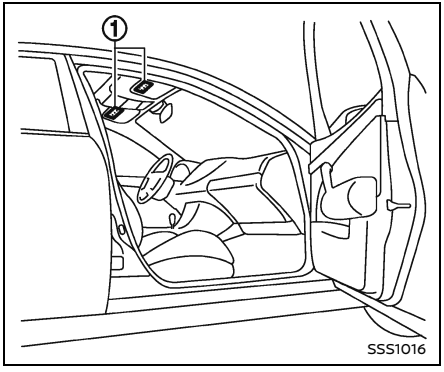

SUPPLEMENTAL AIR BAG WARNING LABELS

Warning labels about the supplemental front-impact air bag are placed in the vehicle as shown in the illustration.

① **SRS air bag**

The warning labels are located on the surface of the sun visors.

⚠ WARNING

Do not use a rear-facing child restraint on a seat protected by an air bag in front of it. If the air bag deploys, it may cause serious injury or death.



SUPPLEMENTAL AIR BAG WARNING LIGHT

The supplemental air bag warning light, displaying in the instrument panel, monitors the circuits for the air bag systems, pretensioners and all related wiring.

When the ignition switch is in the ON position, the supplemental air bag warning light illuminates for about 7 seconds and then turns off. This means the system is operational.

If any of the following conditions occur, the air bag and/or pretensioner systems need servicing:

- The supplemental air bag warning light remains on after approximately 7 seconds.
- The supplemental air bag warning light flashes intermittently.
- The supplemental air bag warning light does not come on at all.

Under these conditions, the air bag and/or pretensioner systems may not operate properly. They must be checked and repaired. It is recommended you visit a NISSAN dealer for this service.

⚠ WARNING

If the supplemental air bag warning light is on, it could mean that the front air bag, side air bag, curtain air bag and/or pretensioner systems will not operate in an accident. To help avoid injury to yourself or others, have your vehicle checked as soon as possible. It is recommended you visit a NISSAN dealer for this service.

REPAIR AND REPLACEMENT PROCEDURE

The front air bags, side air bags, curtain air bags and pretensioners are designed to activate on a one-time-only basis. As a reminder, unless it is damaged, the supplemental air bag warning light will

remain illuminated after inflation has occurred. These systems should be repaired and/or replaced as soon as possible. It is recommended you visit a NISSAN dealer for this service.

When maintenance work is required on the vehicle, the front air bags, side air bags, curtain air bags, pretensioners and related parts should be pointed out to the person conducting the maintenance. The ignition switch should always be in the LOCK position when working under the hood or inside the vehicle.

⚠ WARNING

To ensure proper operation of the seat belts and the air bag system and minimize the risk of severe injury or death please observe the following items:

- **Once a front air bag, side air bag, or curtain air bag has inflated, the air bag module will not function again and must be replaced. Additionally, the activated pretensioner must also be replaced. The air bag module and pretensioner system should be replaced. It is recommended you visit a NISSAN dealer for this service. The air bag module and pretensioner system cannot be repaired.**
- **The front air bag, side air bag and curtain air bag systems and the pretensioner system should be inspected if there is any damage to the front end or side portion of the vehicle. It is recommended you visit a NISSAN dealer for this service.**
- **If you need to dispose of the supplemental air bag or pretensioner systems or scrap the vehicle, it is recommended you visit a NISSAN dealer. Correct supplemental air bag and seat belt pretensioner system disposal procedures are set forth in the appropriate NISSAN Service Manual. Incorrect disposal procedures could cause personal injury.**

POP-UP ENGINE HOOD

BASIC INFORMATION

In certain frontal collisions with a pedestrian, the pop-up engine hood system can help reduce impact to the head of a pedestrian. This system is designed to pop up the rear end of the hood in certain frontal collisions to provide specified clearance between the hood and the engine compartment to reduce impact to a pedestrian.

The pop-up engine hood activates in certain frontal collisions with pedestrians or objects when the vehicle is driven at speeds between approximately 12 and 37 MPH (20 and 60 km/h). While driving, the pop-up engine hood may activate in the event of an impact collision involving the bottom of the vehicle or bumper. The system activates when the collision impact reaches a certain level even though the collision does not cause damage to the bumper.

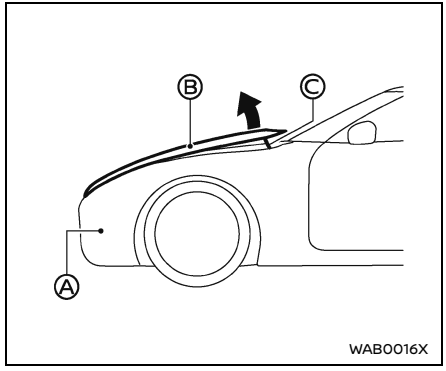

The pop-up engine hood system operates only when the ignition switch is in the ON position. When the ignition switch is in the ON position, the pop-up engine hood warning light illuminates for about 7 seconds and then turns off. This indicates that the pop-up engine hood system is operational. (See "Pop-up engine hood warning light" (P.80).)

When the sensors Ⓐ (located behind the front bumper) detect an impact above a certain level in frontal collisions, the pop-up engine hood system will operate and the rear end of the hood Ⓑ is lifted by the lifters Ⓒ instantly.

⚠ WARNING

- **The pop-up engine hood will not activate in the event of a side impact, rear impact or rollover collision.**
- **The pop-up engine hood may not activate in the event of a corner impact collision of the front bumper.**
- **No unauthorized changes should be made to any components, including the hood and the front bumper, or the wiring of the pop-up engine hood system. This is to prevent accidental or improper activation, or damage to the pop-up engine hood system.**
- **Work around or on the pop-up engine hood system should be done by a NISSAN dealer. The wiring of the pop-up engine hood system should not be modified or disconnected. Unauthorized electrical test equipment and probing devices should not be used on the pop-up engine hood system. This could affect proper operation of the pop-up engine hood system and cause accidental or improper activation.**
- **Do not pull the hood lock release handle or push the hood down after the pop-up engine hood activates. Doing so could cause injury or damage to the hood because the hood cannot be closed manually after the system is activated. When the pop-up engine hood activates, contact a NISSAN dealer.**
- **If you need to dispose of the pop-up engine hood system or scrap the vehicle, contact a NISSAN dealer. Correct pop-up engine hood system disposal procedures are set forth in the appropriate NISSAN Service Manual. Incorrect disposal procedures could cause personal injury.**
- **The pop-up engine hood system cannot be reused after activation. Contact a NISSAN dealer for replacement. If the vehicle becomes involved in a frontal collision but the pop-up engine hood is not activated, be sure to have the pop-up engine hood system checked and replaced by a NISSAN dealer if necessary.**

- **Immediately after the pop-up engine hood has been activated, do not touch the components because the lifters will be hot. You may severely burn yourself.**

POP-UP ENGINE HOOD ACTIVATION CONDITIONS

When the pop-up engine hood will activate

The pop-up engine hood activates in certain frontal collisions with pedestrians or objects when the vehicle is driven at speeds between approximately 12 and 37 MPH (20 and 60 km/h).

The pop-up engine hood activates when the collision impact reaches a certain level even if the collision does not cause damage to the front bumper. In addition, it may activate when the vehicle collides with small animals, lumps of snow or any other objects, depending on the condition and speed of collision.

When the vehicle receives an impact to the undercarriage or a lower part of the front bumper, the pop-up engine hood may also activate. Reduce speed and be careful when driving on a road surface that seems likely to impact the undercarriage or a lower part of the front bumper.

Some examples are shown in the following illustrations.

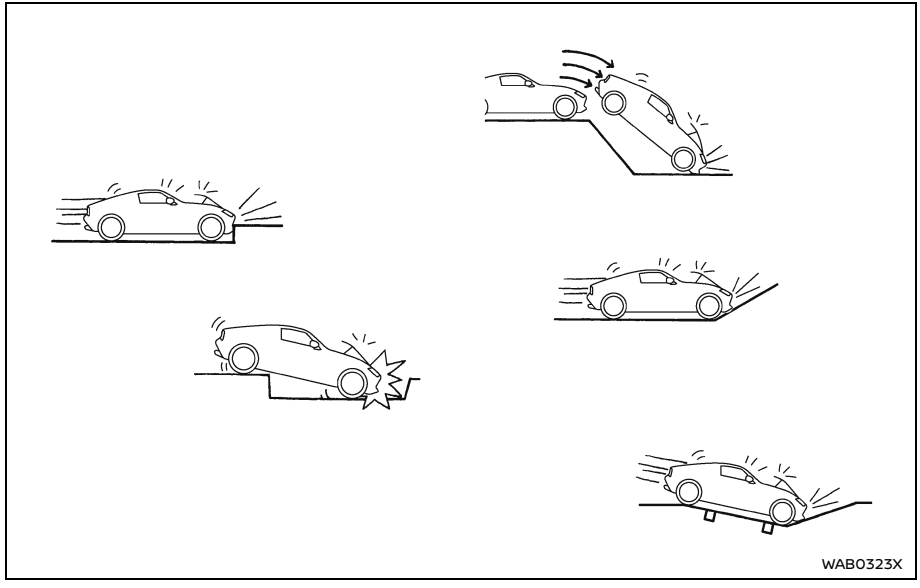

- Hitting a curb, pavement edge or hard surface
- Falling into a deep hole or ditch
- Hitting the front bumper on a slope
- Hitting the front bumper on an uneven road surface, such as a railroad crossing

MEMO

2 Instruments and controls

Cockpit 69
Instrument panel 70
Meters and gauges 71
- Basic information 71
- Changing the meter screen view 72
- Speedometer and odometer 73
- Tachometer 75
- Engine coolant temperature gauge 75
- Fuel gauge 76
- Sports mode display 76
- Triple meter 78

Warning lights, indicator lights and audible reminders 78
- Warning & Indicator Lights 78
- Checking lights 78
- Warning/indicator lights (red) 79
- Warning/indicator lights (yellow) 82
- Warning/indicator lights (other) 86
- Audible reminders 86

Vehicle information display (except sports mode display) 87
- Basic information 87
- How to use the vehicle information display 87
- Startup display 88
- Settings 88
- Vehicle information display warnings and indicators 94
- Trip computer 102
- Clock and outside air temperature 106

Security systems 107
- Basic information 107
- Vehicle Security System 107
- NISSAN Vehicle Immobilizer System 109

Wiper and washer switch 110
Rear window defroster switch 111
Headlight and turn signal switch 112
- Headlight switch 112
- Turn signal switch 119
- Fog light switch (if so equipped) 120

Horn 120
Heated seats (if so equipped) 121
Vehicle Dynamic Control (VDC) OFF switch 122
Power outlet 123
- Basic information 123
- USB (Universal Serial Bus) charging connector 124
- Magnetic wireless charger (if so equipped) 124

Emergency Call (SOS) button (if so equipped) 127
- Emergency support 127

Storage 128
Cup holders 128
Glove box 129
Console box 130
Rear parcel box 130
Rear hatch hooks 131
Windows 132
Power windows 132
Interior lights 134
Map lights 134
Interior light control switch 135
Vanity mirror lights 136
Cargo light 136
HomeLink® Universal Transceiver (if so equipped) 136
Basic information 136
Programming HomeLink® 137
Programming HomeLink® for Canadian customers and gate openers 139
Operating the HomeLink® Universal Transceiver 139
Programming troubleshooting 139
Clearing the programmed information 140
Reprogramming a single HomeLink® button 140
If your vehicle is stolen 140

COCKPIT

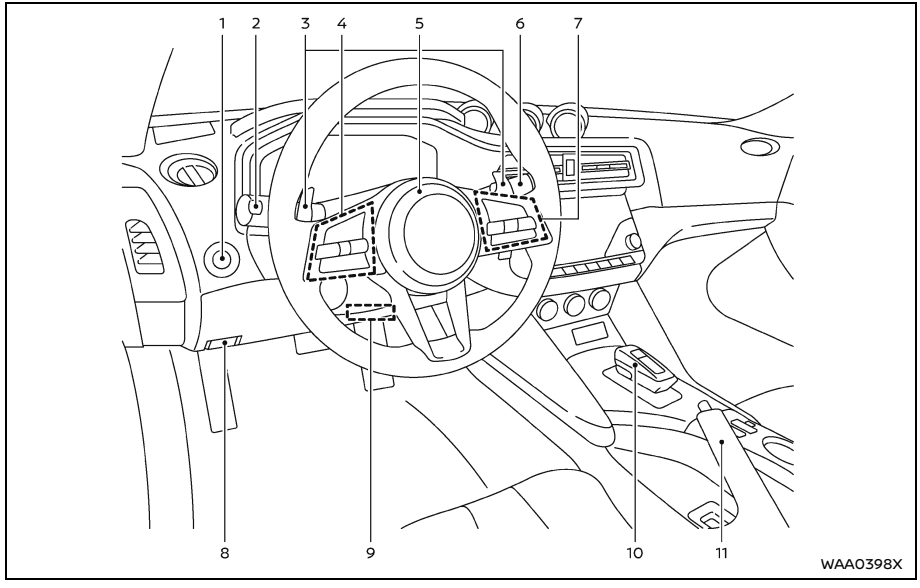

1. Vehicle Dynamic Control (VDC) OFF switch
2. Headlight, fog light and turn signal switch
3. Paddle shifter (Automatic Transmission models)
4. Steering-wheel-mounted controls (left side)
   - Audio control*
   - Vehicle information display control
5. Steering wheel
   - Horn
6. Wiper and washer switch
7. Steering-wheel-mounted controls (right side)
   - Intelligent Cruise Control (ICC) switches
   - Bluetooth® Hands-Free Phone System switches*
   - Voice Recognition system switch*
   - Siri® Eyes Free*
8. Hood release handle
9. Tilt and telescopic steering lock lever
10. Shift lever
    - Automatic Transmission (AT)
    - Manual Transmission (MT)
11. Parking brake

*: See the separate NissanConnect® Owner's Manual.

INSTRUMENT PANEL

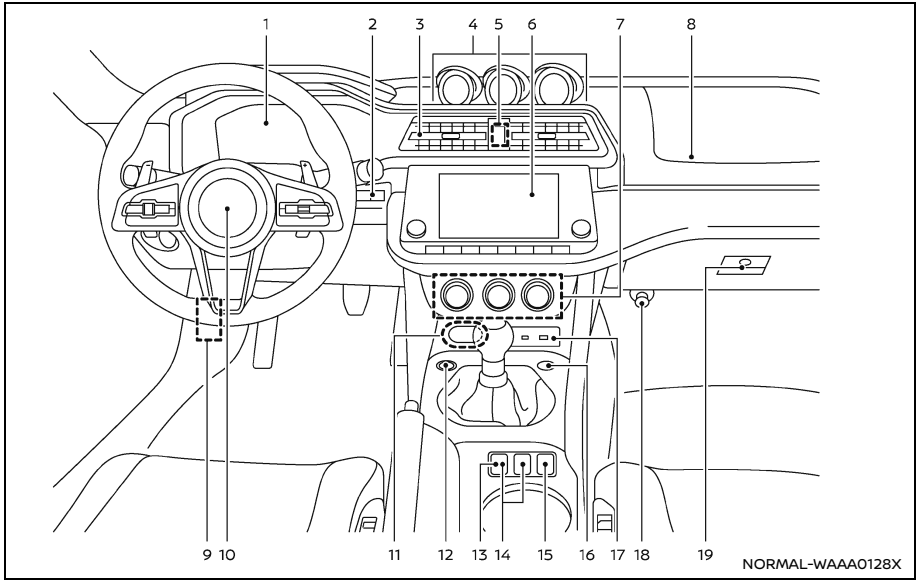

1. Meters and Gauges
   - Clock
2. Instrument brightness control and TRIP/RESET switch for twin trip odometer
3. Ventilator
4. Triple meter
5. Hazard warning flasher switch
6. Audio system* or navigation system (if so equipped)*
   - Bluetooth® Hands-Free Phone System*
   - RearView Monitor
7. Heater and air conditioner
   - Rear window defroster switch
8. Front passenger supplemental air bag
9. Fuse box cover
10. Driver supplemental air bag
11. Wireless charger (if so equipped)
12. Push-button ignition switch
13. SynchroRev Match mode (S-MODE) switch (if so equipped)
14. Seat heater switch (if so equipped)
15. Rear hatch release switch
16. SynchroRev Match mode (S-MODE) switch (if so equipped) or Drive Mode Selector (if so equipped)
17. USB (Universal Serial Bus) connection ports*/USB (Universal Serial Bus) charging connector
18. Power outlet
19. Glove box

*: See the separate NissanConnect® Owner's Manual.

METERS AND GAUGES

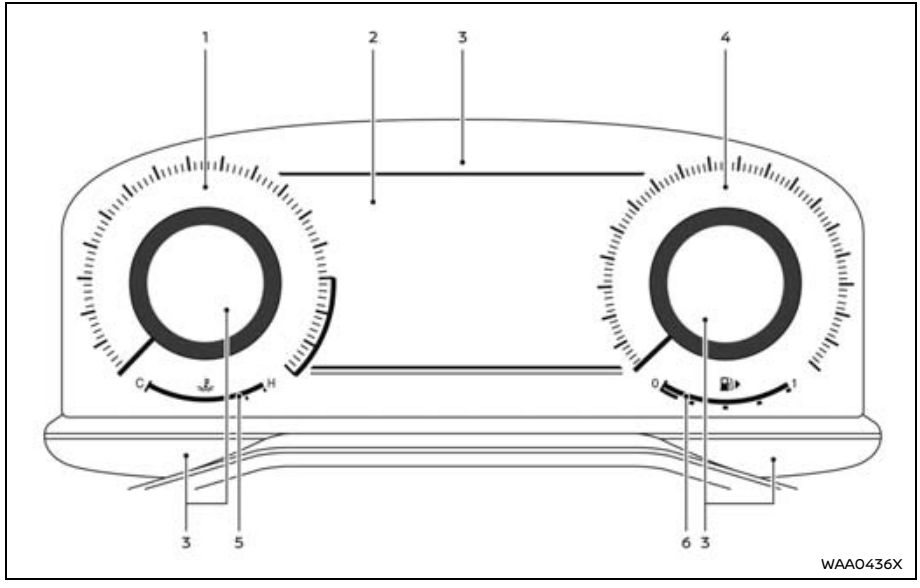

1. Tachometer
2. Vehicle information display
   – Odometer
3. Warning and Indicator lights
4. Speedometer
5. Engine coolant temperature gauge
6. Fuel gauge

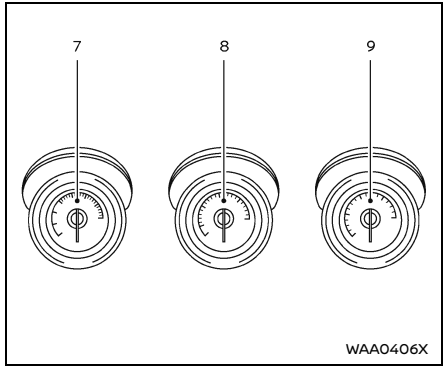

7. Boostmeter
8. Turbo Speedometer
9. Voltmeter

BASIC INFORMATION

⚠ CAUTION

- **For cleaning, use a soft cloth, dampened with water. Never use a rough cloth, alcohol, benzine, thinner or any kind of solvent or paper towel with a chemical cleaning agent. They will scratch or cause discoloration to the lens.**

- **Do not spray any liquid such as water on the meter lens. Spraying liquid may cause the system to malfunction.**

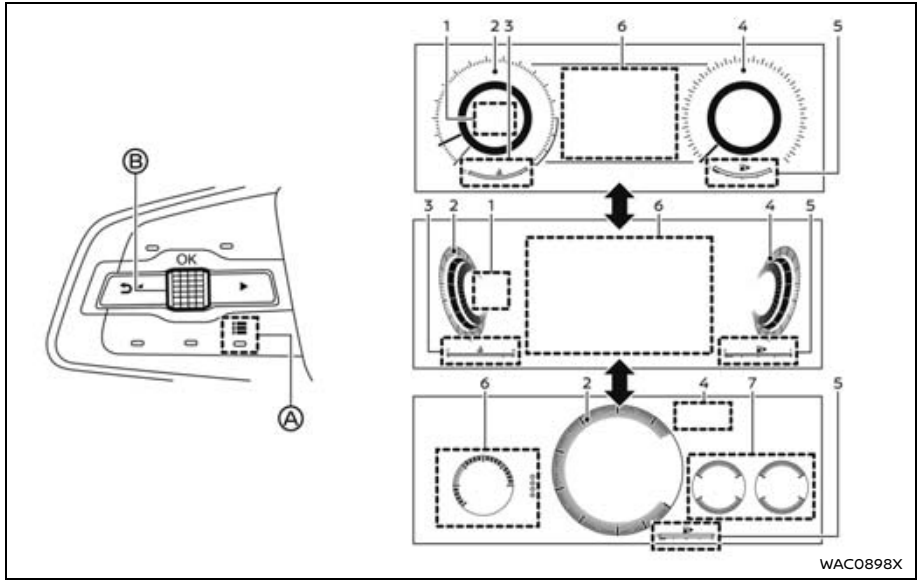

1. Personal Display
2. Tachometer
3. Engine coolant temperature gauge
4. Speedometer
5. Fuel gauge
6. Vehicle information display
7. 4 gauges

CHANGING THE METER SCREEN VIEW

The meter screen view can be changed to expand the vehicle information display area. The display of normal mode, enhanced mode, and sports mode is

shown in the order from top of the illustration.

To change the meter screen view:

1. Push the shortcut menu button Ⓐ on the left side of the steering wheel.
   "Shortcut Menu" appears on the vehicle information display area.
2. Select "Change Meter View" by rotating the scroll dial Ⓑ and push it to change the view.

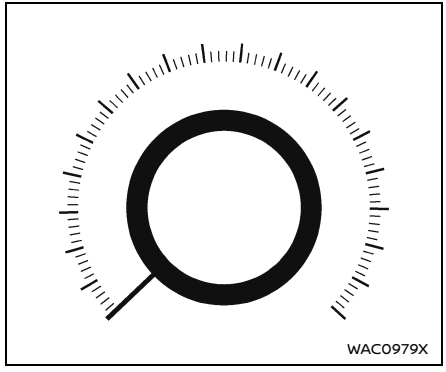

SPEEDOMETER AND ODOMETER

Speedometer

The speedometer indicates vehicle speed in miles per hour (MPH) and kilometers per hour (km/h).

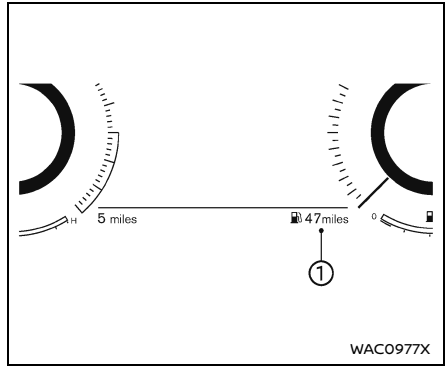

Distance to empty (dte)

The distance to empty (dte) ① provides an estimation of the distance that can be driven before refueling. The dte is constantly being calculated, based on the amount of fuel in the fuel tank and the actual fuel consumption.

The display is updated every 30 seconds.

The dte mode includes a low range warning feature. If the fuel level is low, the warning is displayed on the screen.

When the fuel level drops even lower, the dte display will change to "———".

- If the amount of fuel added is small, the value displayed just before the ignition

switch is placed in the OFF position may continue to be displayed.

- When driving uphill or rounding curves, the fuel in the tank shifts, which may momentarily change the display.

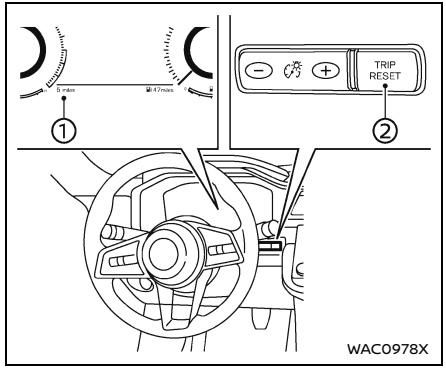

Odometer/Twin trip odometer

The odometer/twin trip odometer ① is displayed on the vehicle information display when the ignition switch is in the ON position.

The odometer displays the total distance the vehicle has been driven.

The twin trip odometer displays the distance of individual trips.

Changing display:

Push the trip reset switch ② to change the display as follows:

ODO → TRIP A → TRIP B → ODO

Resetting trip odometer:

Pushing the trip reset switch ② for more than 1 second resets the currently displayed trip odometer to zero.

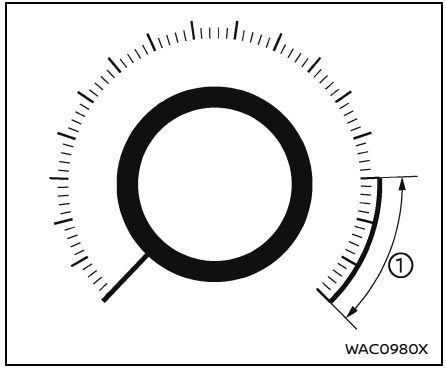

TACHOMETER

The tachometer indicates engine speed in revolutions per minute (RPM). **Do not rev the engine into the red zone ①.**

⚠ CAUTION

When engine speed approaches the red zone, shift to a higher gear or reduce engine speed. Operating the engine in the red zone may cause serious engine damage.

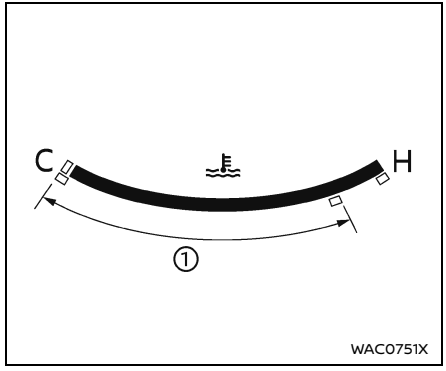

ENGINE COOLANT TEMPERATURE GAUGE

The engine coolant temperature gauge indicates the engine coolant temperature.

The engine coolant temperature is normal when the gauge points within the zone ① shown in the illustration.

The engine coolant temperature will vary with the outside air temperature and driving conditions.

⚠ CAUTION

- **If the gauge indicates the engine coolant temperature is near the hot (H) end of the normal range, reduce vehicle speed to decrease the temperature.**
- **If the gauge is over the normal range, stop the vehicle as soon as safely possible and let the engine idle.**
- **If the engine is overheated, continued operation of the vehicle may seriously damage the engine. (See "If your vehicle overheats" (P.311) for immediate action required.)**

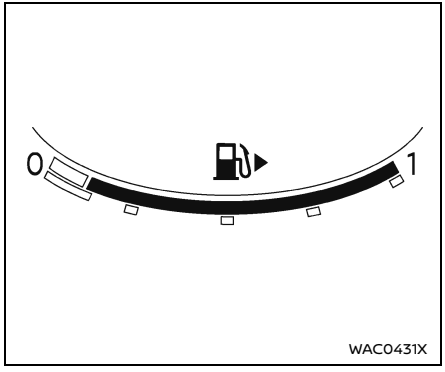

FUEL GAUGE

The fuel gauge indicates the approximate fuel level in the tank when the ignition switch is in the ON position.

The gauge may move slightly during braking, turning, accelerating, or going up and down hills due to movement of fuel in the tank.

The low fuel warning appears on the vehicle information display when the fuel level in the tank is getting low. Refuel as soon as it is convenient, preferably before the gauge reads 0 (empty).

The arrow, , indicates the location of the fuel-filler door.

Refuel before the gauge reads the empty (0) position.

There is a small reserve of fuel in the tank when the fuel gauge reads the empty (0) position.

CAUTION

- **If the vehicle runs out of fuel, the malfunction indicator light (MIL) may come on. Refuel as soon as possible. After a few driving trips, the light should turn off. If the light remains on after a few driving trips, have the vehicle inspected. It is recommended you visit a NISSAN dealer for this service.**
- **For additional information, see "Malfunction Indicator Light (MIL)" (P.84).**

SPORTS MODE DISPLAY

Vehicle information display

The vehicle information display can be changed using the dial and buttons located on the steering wheel. (See "How to use the vehicle information display" (P.87).)

The following items are also displayed if the vehicle is equipped with them:

Tire Pressure:

The tire pressure mode shows the pressure of all four tires while the vehicle is driven. When the Tire Pressure Low — Add Air warning appears, the display can be switched to the tire pressure mode by pushing the scroll dial to reveal additional details on the displayed warning.

Boost gauge:

The boost gauge indicates boost pressure of the engine.

G-Force:

This mode shows the maximum value of the detected G.

G-Force can be reset. Push the scroll dial according to the reset instructions displayed at the bottom of the screen.

Settings:

The setting mode allows user to change the information displayed in the vehicle information display and some settings.

- Upshift indicator

  Allows user to customize the upshift indicator options. Use the scroll dial to change the mode.

- Customization

  You can set the engine speed to illuminate upshift indicator red in the range between 5,200 and 8,500 rpm. The set engine speed can be changed by 100 rpm.
- Auto

  When selected, the upshift indicator will turn on at an optimal timing automatically.
- OFF

  When selected, upshift indicator is not displayed.

(See "Upshift indicator" (P.211).)

- Driver Assistance

  To change the status, warnings or turn on or off any of the systems/warnings displayed in the "Driver Assistance" menu, use the scroll dial to select and change a menu item. (See "Driver Assistance" (P.88).)
- TPMS Setting

  The submenu appears. (See "TPMS Setting" (P.89).)
- Vehicle Settings

  The vehicle settings allows user to change settings for the menus. (See "Vehicle Settings" (P.90).)
- Maintenance

  The maintenance mode allows user to check the distance to oil change or set alerts for the reminding of maintenance intervals. (See "Maintenance" (P.91).)
- Unit/Language

  The units that are shown in the vehicle information display can be changed:
  - Mileage/Fuel
  - Tire Pressure
  - Temperature
  - Language

  (See "Unit/Language" (P.93).)
- Factory Reset

  The settings in the vehicle information display can be reset back to the factory default. (See "Factory Reset" (P.94).)

4 gauges

The 4 gauges may display the following items if the vehicle is equipped with them:

- Engine oil temperature gauge
- Engine oil pressure gauge
- Engine coolant temperature gauge
- Transmission oil pressure gauge
- Differential gear oil temperature gauge
- Accelerator opening gauge

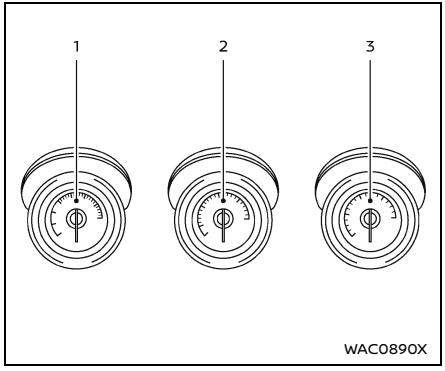

Triple meter

TRIPLE METER

Basic information

1. Boostmeter
2. Turbo Speedometer
3. Voltmeter

Boostmeter

When the ignition switch is placed in the ON position, the boostmeter indicates boost pressure of the engine.

Turbo Speedometer

When the ignition switch is placed in the ON position, the turbo speedometer indicates revolutions of the turbocharger.

Voltmeter

When the ignition switch is placed in the ON position, the volt meter indicates the battery voltage. When the engine is running, it indicates the generator voltage.

While cranking the engine, the volts drop below the normal range. If the needle is not in the normal range (11 to 15 volts) while the engine is running, it may indicate that the charging system is not functioning properly. Have the system checked. It is recommended you visit a NISSAN dealer for this service.

WARNING LIGHTS, INDICATOR LIGHTS AND AUDIBLE REMINDERS

WARNING & INDICATOR LIGHTS

Warning/indicator lights (red)



Warning/indicator lights (yellow)

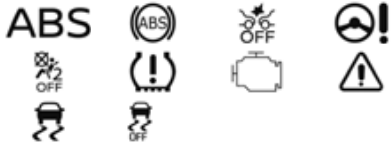

Warning/indicator lights (other)



CHECKING LIGHTS

With all doors closed, apply the parking brake, fasten the seat belts and place the ignition switch in the ON position without starting the engine. The following lights (if so equipped) will come on:

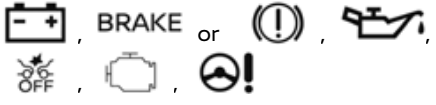

The following lights (if so equipped) come on briefly and then go off:

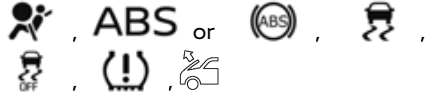

If any light does not come on or operates in a way other than described, it may indicate a burned-out bulb and/or a system malfunction. It is recommended you have the system checked by a NISSAN dealer.

Some indicators and warnings are also displayed on the vehicle information display. (See "Vehicle information display (except sports mode display)" (P.87).)

WARNING/INDICATOR LIGHTS (red)

Basic information

See "Vehicle information display (except sports mode display)" (P.87).

Brake warning light

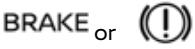

This light functions for both the parking brake and the foot brake systems.

Parking brake indicator:

When the ignition switch is in the ON position, the light comes on when the parking brake is applied.

Low brake fluid warning light:

When the ignition switch is in the ON position, the light warns of a low brake fluid level. If the light comes on while the engine is running with the parking brake not applied, stop the vehicle and perform the following:

1. Check the brake fluid level. Add brake fluid as necessary. (See "Brake and clutch fluid" (P.337).)
2. If the brake fluid level is correct, have the warning system checked. It is recommended you have this service performed by a NISSAN dealer.

Anti-lock Braking System (ABS) warning indicator:

When the parking brake is released and the brake fluid level is sufficient, if both the brake warning light and the Anti-lock Braking System (ABS) warning light illuminate, it may indicate the ABS is not functioning properly. Have the brake system checked, and if necessary repaired. It is recommended you visit a NISSAN dealer for this service. (See "Anti-lock Braking System (ABS) warning light" (P.82).)

⚠ WARNING

- **Your brake system may not be working properly if the warning light is on. Driving could be dangerous. If you judge it to be safe, drive carefully to the nearest service station for repairs. Otherwise, have your vehicle towed because driving it could be dangerous.**
- **Pressing the brake pedal with the engine stopped and/or low brake fluid level may increase your stopping distance and braking will require greater pedal effort as well as pedal travel.**
- **If the brake fluid level is below the minimum or MIN mark on the brake fluid reservoir, do not drive until the brake system has been checked. It is recommended you visit a NISSAN dealer for this service.**

Charge warning light



When the ignition switch is in the ON position, the charge warning light illuminates.

After starting the engine, the charge warning light turns off. This indicates the charging system is operational.

If the light comes on while the engine is running, it may indicate the charging system is not functioning properly. Turn the engine off and check the alternator belt. If the belt is loose, broken, missing or if the light remains on, have your vehicle serviced immediately. It is recommended you visit a NISSAN dealer for this service.

⚠ CAUTION

Do not continue driving if the alternator belt is loose, broken or missing.

Electric shift control system warning light (if so equipped)



The electric shift control system warning light illuminates when a malfunction occurs in the electric shift control system. When the master warning light illuminates, the chime sounds and the following message is displayed in the vehicle information display: “When parked apply parking brake“.

When the ignition switch is placed in the OFF position, the chime sounds continuously. Ensure the parking brake is applied.

Have the system checked by a NISSAN dealer.

Engine oil pressure warning light



This light warns of low engine oil pressure. If the light flickers or comes on during normal driving, pull off the road in a safe area, stop the engine **immediately** and call a NISSAN dealer or other authorized repair shop.

The engine oil pressure warning light is not designed to indicate a low oil level. Use the dipstick to check the oil level. (See "Engine oil" (P.335).)

⚠ CAUTION

Running the engine with the engine oil pressure warning light on could cause serious damage to the engine almost immediately. Such damage is not covered by warranty. Turn off the engine as soon as it is safe to do so.

Master warning light



When the ignition switch is in the ON position, the master warning light illuminates if a warning message appears in the vehicle information display.

See "Vehicle information display (except sports mode display)" (P.87).

Pop-up engine hood warning light



When the ignition switch is in the ON position, the pop-up engine hood warning light illuminates for about 7 seconds and then turns off. This indicates that the pop-up engine hood system is operational.

If any of the following conditions occur, the pop-up engine hood system need servicing. Have the system checked, and if necessary repaired, by a NISSAN dealer promptly.

- The pop-up engine hood warning light remains illuminated after about 7 seconds.
- The pop-up engine hood warning light flashes intermittently.
- The pop-up engine hood warning light does not come on at all.

Unless checked and repaired, the pop-up engine hood system may not function properly. (See "Pop-up engine hood" (P.62).)

Seat belt warning light and chime

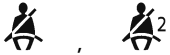

The light and chime remind you to fasten the driver and front passenger seat belts.

The light illuminates whenever the ignition switch is placed in the ON position, and will remain illuminated until the front seat belts are fastened.

for U.S.:

When the vehicle speed exceeds 5 MPH (8 km/h), the light will blink unless the front seat belts are securely fastened.

When the ignition switch is placed in the ON position, the chime will sound for about 35 seconds unless the front seat belts are securely fastened.

When the vehicle speed exceeds 5 MPH (8 km/h), the chime will sound unless the front seat belts are securely fastened. The chime will continue to sound until the front seat belts are fastened.

for Canada:

When the vehicle speed exceeds 10 MPH (15 km/h), the light will blink unless the front seat belts are securely fastened.

When the ignition switch is placed in the ON position, the chime will sound for about 6 seconds unless the driver's seat belt is securely fastened.

When the vehicle speed exceeds 10 MPH (15 km/h), the chime will sound unless the front seat belts are securely fastened. The chime will continue to sound for about 95 seconds until the front seat belts are fastened.

For additional information, refer to "Seat belt warning light and chime" (P.27).

Security indicator light



The light blinks when the ignition switch is in the ACC, OFF or LOCK position. This function indicates the security system equipped on the vehicle is operational.

If the security system is malfunctioning, this light will remain on while the ignition switch is in the ON position. For additional information, see "Security systems" (P.107).

Supplemental air bag warning light



After pushing the ignition switch to the ON position, the supplemental air bag warning light will illuminate. The air bag warning light will turn off after about 7 seconds if the front air bag, side air bag and curtain air bag systems and/or pretensioner system are operational.

If any of the following conditions occur, the front air bag, side air bag and curtain air bag systems and/or pretensioner system need servicing.

- The supplemental air bag warning light remains on after approximately 7 seconds.
- The supplemental air bag warning light flashes intermittently.
- The supplemental air bag warning light does not come on at all.

It is recommended you visit a NISSAN dealer for these services.

Unless checked and repaired, the Supplemental Restraint Systems and/or the pretensioner seat belt may not function properly.

For additional information, see "Supplemental restraint system" (P.44).

⚠ WARNING

If the supplemental air bag warning light is on, it could mean that the front air bag, side air bag and curtain air bag systems and/or pretensioner system will not operate in an accident. To help avoid injury to yourself or others, have your vehicle checked. It is recommended you visit a NISSAN dealer for this service.

WARNING/INDICATOR LIGHTS (yellow)

Basic information

See "Vehicle information display (except sports mode display)" (P.87).

Anti-lock Braking System (ABS) warning light

ABS or 

When the ignition switch is in the ON position, the Anti-lock Braking System (ABS) warning light illuminates and then turns off. This indicates the ABS is operational.

If the ABS warning light illuminates while the engine is running, or while driving, it may indicate the ABS is not functioning properly. Have the system checked. It is recommended you visit a NISSAN dealer for this service.

If an ABS malfunction occurs, the anti-lock function is turned off. The brake system then operates normally, but without anti-lock assistance. (See "Brake system" (P.289).)

Automatic Emergency Braking (AEB) system OFF warning light



When the ignition switch is in the ON position, the AEB system OFF warning light illuminates. After starting the engine, the warning light turns off.

This light illuminates when the AEB with Pedestrian Detection system is set to OFF on the vehicle information display.

If the light illuminates or flashes when the AEB with Pedestrian Detection system is ON, it may indicate that the system is unavailable. See "Automatic Emergency Braking (AEB) with Pedestrian Detection system" (P.250) or "Intelligent Forward Collision Warning (I-FCW)" (P.268).

Electric power steering warning light



⚠ WARNING

- **If the engine is not running or is turned off while driving, the power assist for the steering will not work. Steering will be harder to operate.**
- **When the electric power steering warning light illuminates with the engine running, there will be no power assist for the steering. You will still have control of the vehicle, but the steering will be harder to operate. Have the power steering system checked. It is recommended that you visit a NISSAN dealer for this service.**

When the ignition switch is in the ON position, the electric power steering warning light illuminates. After starting the engine, the electric power steering warning light turns off. This indicates the electric power steering is operational.

If the electric power steering warning light illuminates while the engine is run-

ning, it may indicate the electric power steering is not functioning properly and may need servicing. Have the power steering checked. It is recommended that you visit a NISSAN dealer for this service.

When the electric power steering warning light illuminates with the engine running, there will be no power assist for the steering, but you will still have control of the vehicle. At this time, greater steering effort is required to operate the steering wheel, especially in sharp turns and at low speeds.

(See "Electric power steering" (P.288).)

Front passenger air bag status light



The front passenger air bag status light located above the inside mirror, will be lit and the front passenger air bag will be off depending on how the front passenger seat is being used.

For front passenger air bag status light operation, see "NISSAN Advanced Air Bag System (front seats)" (P.50).

Low tire pressure warning light



Your vehicle is equipped with a Tire Pressure Monitoring System (TPMS) that monitors the tire pressure of all tires.

The low tire pressure warning light warns of low tire pressure or indicates that the TPMS is not functioning properly.

After the ignition switch is pushed ON, this light illuminates for about 1 second and turns off.

Low tire pressure warning:

If the vehicle is being driven with low tire pressure, the warning light will illuminate.

The “Tire Pressure Low - Add Air” warning also appears in the vehicle information display.

When the low tire pressure warning light illuminates, you should stop and adjust the tire pressure to the recommended COLD tire pressure shown on the Tire and Loading Information label. The low tire pressure warning light may not automatically turn off when the tire pressure is adjusted. After the tire is inflated to the recommended pressure, the vehicle must be driven at speeds above 16 MPH (25 km/h) to activate the TPMS and turn off the low tire pressure warning light. Use a tire pressure gauge to check the tire pressure.

The “Tire Pressure Low - Add Air” warning is active as long as the low tire pressure warning light remains illuminated.

For additional information, see "Vehicle information display (except sports mode display)" (P.87), "Tire Pressure Monitoring System (TPMS)" (P.191) and "Tire Pressure Monitoring System (TPMS)" (P.299).

TPMS malfunction:

If the TPMS is not functioning properly, the low tire pressure warning light will flash for approximately 1 minute when the ignition switch is pushed ON. The light will remain on after the 1 minute. Have the system checked. It is recommended you visit a NISSAN dealer for this service.

The “Tire Pressure Low - Add Air” warning does not appear if the low tire pressure warning light illuminates to indicate a TPMS malfunction.

For additional information, see "Tire Pressure Monitoring System (TPMS)" (P.191).

⚠ WARNING

- **If the light does not illuminate with the ignition switch placed in the ON position, have the vehicle checked. It is recommended you visit a NISSAN dealer for this service as soon as possible.**

- **If the light illuminates while driving, avoid sudden steering maneuvers or abrupt braking, reduce vehicle speed, pull off the road to a safe location and stop the vehicle as soon as possible. Driving with under-inflated tires may permanently damage the tires and increase the likelihood of tire failure. Serious vehicle damage could occur and may lead to an accident and could result in serious personal injury. Check the tire pressure for all four tires. Adjust the tire pressure to the recommended COLD tire pressure shown on the Tire and Loading Information label to turn the low tire pressure warning light OFF. If the light still illuminates while driving after adjusting the tire pressure, a tire may be flat or the TPMS may be malfunctioning. If you have a flat tire, repair it with the tire puncture repair kit as soon as possible. If no tire is flat and all tires are properly inflated, it is recommended you consult a NISSAN dealer.**
- **Replacing tires with those not originally specified by NISSAN could affect the proper operation of the TPMS.**
- **It is recommended you visit a NISSAN dealer as soon as possible after using tire repair sealant.**
- **To help avoid serious personal injury or death, when checking your tire pressure, either as part of routine maintenance or because of a TPMS alert, please check the pressure in all of your tires. Driving on underinflated tires can cause tire failure and interfere with the proper operation of other vehicle systems.**

⚠ CAUTION

- **The TPMS is not a substitute for the regular tire pressure check. Be sure to check the tire pressure regularly.**
- **If the vehicle is being driven at speeds of less than 16 MPH (25 km/h), the TPMS may not operate correctly.**
- **Be sure to install the specified size of tires to the four wheels correctly.**

Malfunction Indicator Light (MIL)



If the malfunction indicator light comes on steady or blinks while the engine is running, it may indicate a potential emission control malfunction.

The malfunction indicator light may also come on steady if the fuel-filler cap is loose or missing, or if the vehicle runs out of fuel. Check to make sure the fuel-filler cap is installed and closed tightly, and that the vehicle has at least 3 US gallons (11.4 liters) of fuel in the fuel tank.

After a few driving trips, the light should turn off if no other potential emission control system malfunction exists.

If this indicator light remains on for 20 seconds and then blinks for 10 seconds when the engine is not running, it indicates that the vehicle is not ready for an emission control system inspection/maintenance test. (See "Readiness for Inspection/Maintenance (I/M) test" (P.409).)

Operation:

The malfunction indicator light will come on in one of two ways:

- Malfunction indicator light on steady — An emission control system malfunction has been detected. Check the fuel-filler cap if the Loose Fuel Cap warning appears in the vehicle information display. If the fuel-filler cap is loose or missing, tighten or install the cap and continue to drive the vehicle.

  The light should turn off after a few driving trips. If the light does not turn off after a few driving trips, have the vehicle inspected. It is recommended you visit a NISSAN dealer for this service. You do not need to have your vehicle towed to the dealer.
- Malfunction indicator light blinking — An engine misfire has been detected which may damage the emission control system.

  To reduce or avoid emission control system damage:

  1) Do not drive at speeds above 45 MPH (72 km/h).
  2) Avoid hard acceleration or deceleration.
  3) Avoid steep uphill grades.
  4) If possible, reduce the amount of cargo being hauled or towed.

  The malfunction indicator light may stop blinking and remain on.

  Have the vehicle inspected. It is recommended you visit a NISSAN dealer for this service. You do not need to have your vehicle towed to the dealer.

CAUTION

Continued vehicle operation without having the emission control system checked and repaired as necessary could lead to poor driveability, reduced fuel economy, and possible damage to the emission control system.

For automatic transmission models, the malfunction Indicator Light may be lit by detecting low voltage.

See "Jump starting" (P.309).

Master warning light



When the ignition switch is in the ON position, the master warning light illuminates if a warning message appears in the vehicle information display.

See "Vehicle information display (except sports mode display)" (P.87).

Slip indicator light



When the ignition switch is in the ON position, the slip indicator light illuminates and then turns off.

The light will blink when the VDC system or the traction control system is operating, thus alerting the driver that the vehicle is nearing its traction limits. The road surface may be slippery.

When the Slip indicator light illuminates when the VDC system is turned on, this light alerts the driver to the fact that the VDC system's fail-safe mode is operating, for example the VDC system may not be functioning properly. Have the system checked. It is recommended you visit a NISSAN dealer for this service. If a malfunction occurs in the system, the VDC system function will be canceled but the vehicle is still driveable. For additional information, see "Vehicle Dynamic Control (VDC) system" (P.291) of this manual.

Vehicle Dynamic Control (VDC) off indicator light



When the ignition switch is in the ON position, the Vehicle Dynamic Control (VDC) off indicator light illuminates and then turns off.

The light comes on when the VDC off switch is pushed and held to OFF the VDC system or to select the Traction mode (for NISMO models). This indicates that the VDC system and traction control system are not operating.

WARNING/INDICATOR LIGHTS (other)

Basic information

See "Vehicle information display (except sports mode display)" (P.87).

Exterior light indicator



This indicator illuminates when the headlight switch is turned to the AUTO, or position and the front parking lights, instrument panel lights, rear combination lights, license plate lights or headlights are on. The indicator turns off when these lights are turned off.

High beam assist indicator light



The high beam assist indicator light illuminates when the high beam assist system is turned on and it is operational. (See "High beam assist" (P.114).)

High beam indicator light



This light comes on when the headlight high beam is on and goes out when the low beam is selected.

Rear fog light indicator light (if so equipped)



The rear fog light indicator light illuminates when the rear fog light is on. (See "Fog light switch (if so equipped)" (P.120).)

Turn signal/hazard indicator lights



The light flashes when the turn signal switch lever or hazard switch is turned on.

AUDIBLE REMINDERS

Light reminder chime

A chime will sound when the driver side door is opened with the light switch in the or position and the ignition switch in the ACC, OFF or LOCK position.

Turn the headlight switch to the OFF (if so equipped) or the AUTO position when you leave the vehicle.

Parking brake reminder chime

A chime will sound if the vehicle speed is above 4 MPH (7 km/h) with the parking brake applied. Stop the vehicle and release the parking brake.

Brake pad wear warning

The disc brake pads have audible wear warnings. When a brake pad requires replacement, it will make a high pitched scraping sound when the vehicle is in motion. This scraping sound will first occur only when the brake pedal is depressed. After more wear of the brake pad the sound will always be heard even if the brake pedal is not depressed. Have the brakes checked as soon as possible if the warning sound is heard.

VEHICLE INFORMATION DISPLAY (except sports mode display)

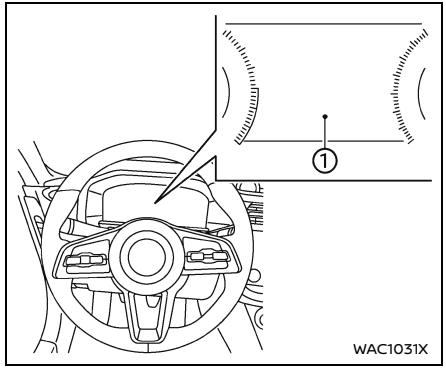

BASIC INFORMATION

The vehicle information display ① is located as shown above, and it displays the warnings and information. The following items are also displayed if the vehicle is equipped with them:

- Vehicle settings
- Trip computer information
- Driver Assistance
- Intelligent Cruise Control system information
- Intelligent Key operation information
- Audio information
- Navigation - turn by turn
- Indicators and warnings
- Tire pressure information
- Other information

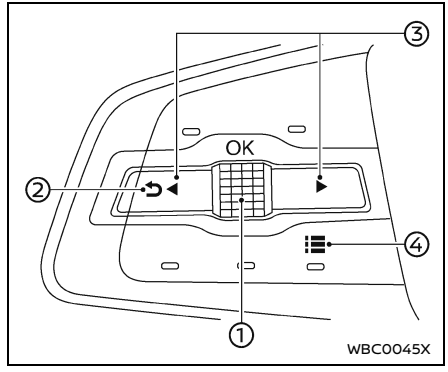

HOW TO USE THE VEHICLE INFORMATION DISPLAY

The vehicle information display can be changed using the dial and buttons located on the steering wheel.

① Scroll dial - navigate through the items and change or select an item in vehicle information display

this scroll dial allows up/down navigation and push to select

② ↩ - go back to the previous menu

③ ◀ ▶ - change from one display screen category to the next (i.e. trip, Fuel economy)

④ ☰ - display the "Shortcut Menu" screen

Shortcut Menu

When the ☰ button ④ is pushed, the "Shortcut Menu" screen appears on the vehicle information display. Select the menu by rotating the scroll dial ① and push it.

The following menus are available:

- Change Meter View

  Allows user to change the meter screen view. (See "Changing the meter screen view" (P.72).)
- Audio Source

  Allows user to select the available audio source. (See the separate NissanConnect® Owner's Manual for the audio system.)
- Driver Assistance

  Allows user to change the "Driver Assistance" settings. (See "Driver Assistance" (P.88).)
- Personal Display

  Allows user to change the "Personal Display" settings. (See "Personal Display" (P.89).)

STARTUP DISPLAY

When the ignition switch is placed in the ON position, the vehicle information display may display the following screens if the vehicle is equipped with them:

- Home
- Blank
- Drive Computer
- Fuel Economy
- Tire Pressures
- Navigation
- Compass
- Audio
- Driving Aids
- Warnings
- Settings

Warnings will only display if there are any present. For more information on warnings and indicators, see "Vehicle information display warnings and indicators" (P.94).

To control what items display in the vehicle information display, see "Settings" (P.88).

SETTINGS

Basic information

The setting mode allows user to change the information displayed in the vehicle information display and some settings:

- Driver Assistance
- Personal Display
- TPMS Setting
- Clock
- Vehicle Settings
- Maintenance
- Customize Display
- Unit/Language
- Factory Reset

Driver Assistance

To change the status, warnings or turn on or off any of the systems/warnings displayed in the "Driver Assistance" menu, use the scroll dial to select and change a menu item:

- Lane Assist
- Blind Spot Assist
- Emergency Brake
- Parking Assist
- Rear Cross Traffic Alert
- Driver Alertness
- Timer Alert

Lane Assist:

- Warning

  Allows user to turn the Lane Departure Warning (LDW) system ON/OFF.

(See "Lane Departure Warning (LDW)" (P.216).)

Blind Spot Assist:

- Warning

  Allows user to turn the Blind Spot Warning (BSW) system ON/OFF.
- Indicator Brightness
  - Bright/Standard/Dark

(See "Blind Spot Warning (BSW)" (P.221).)

Emergency Brake:

Allows user to turn the Automatic Emergency Braking (AEB) with Pedestrian Detection system and Intelligent Forward Collision Warning (I-FCW) system ON/OFF.

(See "Automatic Emergency Braking (AEB) with Pedestrian Detection system" (P.250) and "Intelligent Forward Collision Warning (I-FCW)" (P.268).)

Parking Assist:

To change the status or turn on or off any of the systems displayed in the "Parking Assist" menu, use the scroll dial to select and change a menu item:

- Sensor

  Allows user to customize the sonar sensors options. Use the scroll dial to change the mode.
  - ON
  - OFF
  - Front Only
- Sonar distance

  Allows user to select the sonar sensor's detection distance (Long, Medium or Short).
- Auto Show Sonar

  Allows user to turn the sonar system display ON/OFF.
- Sonar Volume

  Allows user to select the volume of the sonar tone (High, Medium or Low).

(See "Front and rear sonar system" (P.280).)

Rear Cross Traffic Alert:

Allows user to turn the Rear Cross Traffic Alert (RCTA) system ON/OFF. (See "Rear Cross Traffic Alert (RCTA)" (P.261).)

Driver Alertness:

Allows user to turn the Intelligent Driver Alertness (I-DA) on or off. (See "Intelligent Driver Alertness (I-DA)" (P.277).)

Timer Alert:

Allows user to adjust the Timer Alert or reset.

- (Current Time)/(Set Time)
- Reset

Personal Display

To change the display in the "Personal Display" menu, use the scroll dial to select and change a menu item:

- Blank
- Navigation (if so equipped)
- Time to Destination (if so equipped)
- Fuel Economy
  - Manual Reset1
  - Manual Reset2
  - Auto Refuel
- Trip
  - Manual Reset1
  - Manual Reset2
  - Auto Refuel
- Gear position (if so equipped)
- Average speed
  - Manual Reset1
  - Manual Reset2
  - Auto Refuel

TPMS Setting

The following submenu appears.

Tire Pressure Unit:

The unit for tire pressure that is shown in the vehicle information display can be changed to:

- psi
- kPa

- bar
- kgf/cm^2

Use the scroll dial to select and change the unit.

If necessary, refer to the following table to convert between units.

kPa	200	210	220	230	240	250	260	270	280	290	300	310	320	330	340
psi	29	30	32	33	35	36	38	39	41	42	44	45	46	48	49
bar	2.0	2.1	2.2	2.3	2.4	2.5	2.6	2.7	2.8	2.9	3.0	3.1	3.2	3.3	3.4
kgf/cm^2	2.0	2.1	2.2	2.3	2.4	2.5	2.6	2.7	2.8	2.9	3.0	3.1	3.2	3.3	3.4

JVI0938X

Clock

Allows user to adjust the clock settings and time within the vehicle information display.

- Display (if so equipped)
- Clock Mode (if so equipped)
- Clock Format
- Daylight Saving (if so equipped)
- Time Zone (if so equipped)
- Set Clock Manually

The clock may also be set in the center display. For additional information, refer to the separate NissanConnect® Owner's Manual.

Vehicle Settings

The vehicle settings allows user to change settings for the following menus.

- Lighting
- Turn Indicator
- Locking
- Wipers

The vehicle settings can be changed using the scroll dial.

Lighting:

The "Lighting" menu has the following options:

- Welcome Headlight

  The welcome lighting can be set to be ON or OFF. Use the scroll dial to turn this feature ON or OFF.
- Auto Room Lamp

  When this item is turned to ON, the interior lights will illuminate if any door is unlocked. Use the scroll dial to turn this feature ON or OFF.
- Auto Headlight

  The sensitivity of the Auto Headlight can be adjusted. Use the scroll dial to select the required sensitivity. The following options are available:
  - Turn on earliest
  - Turn on earlier
  - Turn on standard
  - Turn on later
- Light Off Delay

  The duration of the automatic headlights off timer can be changed from 0 to 180 seconds. Use the scroll dial to change the duration.

Turn Indicator:

The "3 flashes" overtaking feature can be changed from:

- 3 flashes
- Continuous

Use the scroll dial to toggle choices.

Locking:

The "Locking" menu has the following options:

- Ext. Door Switch (if so equipped)

  When this item is turned on, the request switch on the door is activated. Use the scroll dial to activate or deactivate this function.
- Selective Unlock (if so equipped)

  When this item is turned to ON, only the driver's door is unlocked first after the door unlock operation. When the door handle request switch on the driver's or passenger's side door is pushed to be unlocked, only the corresponding door is unlocked first. All the doors can be unlocked if the door unlock operation is performed again within 60 seconds. When this item is turned to OFF, all the doors will be unlocked after the door unlock operation is performed once.
- Auto Door Unlock (if so equipped)

  The "Auto Door Unlock" feature allows user to customize the auto door unlock options. Use the scroll dial to change the mode.
  - Shift to P (if so equipped)
  - IGN OFF
  - OFF
- Horn beeps on lock (if so equipped)

  When this item is turned on, the horn will chirp and the hazard indicators will flash twice when locking the vehicle with the Intelligent Key. Use the scroll dial to activate or deactivate this function.

Wipers:

The "Wipers" menu has the following options:

- Speed Dependent

  The "Speed Dependent" feature can be activated or deactivated. Use the scroll dial to turn this feature ON or OFF.
- Drip Wipe

  The "Drip Wipe" feature can be set to be ON or OFF. Use the scroll dial to turn this feature ON or OFF.

Maintenance

The maintenance mode allows user to check the distance to oil change or set alerts for the reminding of maintenance intervals. To change an item:

Select "Maintenance" using the scroll dial and push it.

- Oil Control System
- Oil and Filter
- Tire
- Other

Oil Control System:

The Oil Control System informs the distance to oil change. Never exceed the following distance between oil change intervals:

- 10,000 miles (16,000 km) for the VR30DDTT engine

Display when ignition is ON	Display timing	Action Required
Engine Oil Service due in xxx miles	Remaining oil life is less than 940 miles (1,500 km).	Plan to have your vehicle serviced.
Engine Oil Service due	Remaining oil life is 0 miles (0 km).	Have your vehicle serviced within two weeks or less than 500 miles (800 km).

The oil change interval cannot be adjusted manually.

The distance to oil change interval is calculated depending on the driving conditions and set automatically by the oil control system. A reminder will be displayed when approaching the end of the service interval.

When the Factory Reset option is selected in the vehicle information display, the oil control system will also be reset to initial value. Please change the engine oil when Factory Reset is selected.

⚠ CAUTION

If the oil replacement indicator is displayed, change the engine oil within two weeks or less than 500 miles (800 km).

Operating the vehicle with deteriorated oil can damage the engine.

To reset oil control system:

1. Place the ignition switch in the ON position.
2. Push the ◀ and ▶ buttons on the steering wheel until "Settings" appears in the vehicle information display. Use the scroll dial to select "Maintenance". Then, push the scroll dial.
3. Select the "Oil Control System" and push the scroll dial.
4. Push the scroll dial according to the reset instructions displayed at the bottom of the "Oil Control System" maintenance screen.

If your oil replacement indicator resets prematurely or becomes inoperative, please change the oil within the following distance from your last oil change: 5,000 miles (8,000 km)

When the user sets an alert for changing the engine oil in the "Oil and Filter" menu, reset both "Oil Control System" and "Oil and Filter" after changing the engine oil.

Oil and Filter:

This indicator appears when user set distance comes for changing the engine oil and filter. You can set or reset the distance for checking or replacing these items. For scheduled maintenance items and intervals, refer to the "9. Maintenance and schedules" section.

When the user sets an alert for changing the engine oil in the "Oil and Filter" menu, reset both "Oil Control System" and "Oil and Filter" after changing the engine oil.

Tire:

This indicator appears when the user set distance comes for replacing tires. You can set or reset the distance for replacing tires.

⚠ WARNING

The tire replacement indicator is not a substitute for regular tire checks, including tire pressure checks. (See "Changing wheels and tires" (P.360).) Many factors including tire inflation, alignment, driving habits and road conditions affect tire wear and when tires should be replaced. Setting the tire replacement indicator for a certain driving distance does not mean your tires will last that long. Use the tire replacement indicator as a guide only and always perform regular tire checks. Failure to perform regular tire checks, including tire pressure checks could result in tire failure. Serious vehicle damage could occur and may lead to a collision, which could result in serious personal injury or death.

Other:

This indicator appears when the user set distance comes for checking or replacing maintenance items other than the engine oil, oil filter and tires. Other maintenance items can include such things as air cleaner filter. You can set or reset the distance for checking or replacing the items.

Customize Display

The display settings allows user to choose from the various meter selections.

The display settings can be changed using the scroll dial.

Main Menu Selection:

Displays available screens that can be shown in the vehicle information display.

Route Guidance (if so equipped):

To change the setting, use the scroll dial to select and push it.

- Alerts

The "Alerts" allows user to turn the Navigation Settings alerts on or off.

Welcome Effect:

The "Welcome Effect" displays the available welcome effect settings.

- Animation

Unit/Language

The units that are shown in the vehicle information display can be changed:

- Mileage/Fuel
- Tire Pressure
- Temperature
- Language

Use the scroll dial to select and change the units of the vehicle information display.

Mileage/Fuel:

The unit for the mileage that is shown in the vehicle information display can be changed.

- miles, MPG
- km, km/l
- km, l/100km

Use the scroll dial to select and change the unit.

Tire Pressure:

The unit for tire pressures that is shown in the vehicle information display can be changed to:

- psi
- kPa
- bar
- kgf/cm^2

(See "TPMS Setting" (P.89).)

Temperature:

The temperature that is shown in the vehicle information display can be changed from:

- °C
- °F

Use the scroll dial to toggle choices.

Language:

The language of the vehicle information display can be changed.

Use the scroll dial to select and change the language of the vehicle information display.

Factory Reset

The settings in the vehicle information display can be reset back to the factory default. To reset the vehicle information display:

1. Select “Factory Reset” using the scroll dial and push it.
2. Select “Yes” to return all settings back to default by pushing the scroll dial.

VEHICLE INFORMATION DISPLAY WARNINGS AND INDICATORS

Basic information

The displayed images may differ depending on the model.

Engine start operation indicator (Automatic transmission models)



Push brake and start switch to drive

This indicator appears when the shift position is in the P (Park) position.

This indicator means that the engine will start by pushing the ignition switch with the brake pedal depressed. You can start the engine directly in any position of the ignition switch.

Engine start operation indicator (Manual Transmission models)



Push clutch and start switch to drive

This indicator means that the engine will start by pushing the ignition switch with the clutch pedal depressed.

No Key Detected warning



No Key Detected

The warning appears when the door is closed with the Intelligent Key left outside the vehicle and the ignition switch in the ACC or ON position. Make sure that the Intelligent Key is inside the vehicle.

See "Intelligent Key system" (P.148) for more details.

Intelligent Key battery discharge indicator



Key Battery Low

This indicator appears when the Intelligent Key battery is running out of power.

If this indicator appears, replace the battery with a new one. (See "Intelligent Key battery replacement" (P.348).)

Engine start operation for Intelligent Key system indicator



Place the key near the start switch

This indicator appears when the Intelligent Key battery is running out of power and when the Intelligent Key system and vehicle are not communicating normally.

If this indicator appears, touch the ignition switch with the Intelligent Key while depressing the brake pedal. (See "Intelligent Key battery discharge" (P.200).)

Key System Error: See Owner's Manual warning



Key System Error
See Owner's Manual

This warning appears if there is a malfunction in the Intelligent Key system.

If this warning appears while the engine is stopped, the engine cannot be started. If this warning appears while the engine is running, the vehicle can be driven. However, it is recommended that you visit a NISSAN dealer for repair as soon as possible.

Parking brake release warning

Release Parking Brake

This warning appears when the vehicle speed is above 4 MPH (7 km/h) and the parking brake is applied.

Low Fuel warning



Low Fuel

This warning appears when the fuel level in the fuel tank is getting low. Refuel as soon as it is convenient, preferably before the fuel gauge reaches 0 (Empty). There will be a small reserve of fuel in the tank when the fuel gauge needle reaches 0 (Empty).

Loose Fuel Cap warning



Loose Fuel Cap

This warning appears when the fuel-filler cap is not tightened correctly after the vehicle has been refueled. (See "Fuel-filler cap" (P.161).)

Low Washer Fluid warning



Low Washer Fluid

This warning appears when the window washer fluid is at a low level. Add window washer fluid as necessary. For additional information, refer to "Window washer fluid" (P.339).

Door/rear hatch open warning



This warning appears if any of the doors and/or the rear hatch are open or not closed securely. The vehicle icon indicates which door or the rear hatch is open on the display.

Tire Pressure Low — Add Air warning



Tire Pressure Low
Add Air

This warning appears when the low tire pressure warning light in the meter illuminates and low tire pressure is detected. The warning appears each time the ignition switch is placed in the ON position as long as the low tire pressure warning light remains illuminated. If this warning appears, stop the vehicle and adjust the pressure to the recommended COLD tire pressure shown on the Tire and Loading Information label. (See "Low tire pressure warning light" (P.83) and "Tire Pressure Monitoring System (TPMS)" (P.191).)

Shift to P range warning (Automatic transmission models)



Shift to P range

This warning appears when the driver's door is opened while the shift lever is in any position other than P (Park).

If this warning appears, push the park button to engage the P (Park) position.

An inside warning chime will also sound. (See "Intelligent Key system" (P.148).)

AT Malfunction Service now warning (Automatic transmission models)

AT Malfunction
Service now

This warning appears when there is a malfunction with the AT system. If this warning appears, have the system checked. It is recommended that you visit a NISSAN dealer for this service.

AT hot Power reduced warning (Automatic transmission models)

AT hot
Power reduced

The AT has a high fluid temperature protection mode. If the fluid temperature becomes too high (for example, climbing steep grades in high temperatures with heavy loads), engine power and, under some conditions, vehicle speed will be decreased automatically to reduce the chance of transmission damage. Vehicle speed can be controlled with the accelerator pedal, but the engine and vehicle speed may be reduced.

AT Malfunction Stop safely warning (Automatic transmission models)

AT Malfunction
Stop safely

This warning appears when there is a malfunction with the AT system. If this warning appears, stop the vehicle in a safe place. Have the system checked. It is recommended you visit a NISSAN dealer for this service.

Stop the vehicle warning (Automatic transmission models)

Stop the vehicle

This warning appears when the AT system judges the vehicle is reversed on an uphill road with the shift position in D (Drive), or moved forward on a downhill road with the shift position in R (Reverse). The engine may stall, so stop the vehicle movement by depressing the brake pedal.

Service AT Power reduced warning (Automatic transmission models)

Service AT
Power reduced

This warning appears when the AT power is reduced. If this warning appears, have the system checked. It is recommended that you visit a NISSAN dealer for this service.

Check position of shift lever warning (if so equipped)

Check position of shift lever

This warning appears if the system cannot detect the shift position. Make sure the vehicle is placed in a position properly. Have the system checked. It is recommended you contact a NISSAN dealer for this service.

When parked apply parking brake warning (Automatic transmission models)



When parked apply parking brake

This warning appears if a malfunction occurs in the electric shift control system. Contact a NISSAN dealer as soon as possible. When parking the vehicle, make sure that the parking brake is applied. If the parking brake is not applied, the ignition switch may not be turned off.

Automatic Transmission (AT) position indicator (Automatic transmission models)

P

This indicator shows the AT shift position.

In the manual shift mode, when the transmission does not shift to the selected gear due to a transmission protection mode, the AT position indicator will blink and a chime will sound.

See "Automatic transmission" (P.202) for further details.

Shipping Mode On Push Storage Fuse warning (if so equipped)

Shipping Mode On
Push Storage Fuse

This warning may appear if the extended storage switch is not pushed in. When this warning appears, push in the extended storage switch to turn off the warning. (See "Extended storage fuse switch" (P.348).)

Power will turn off to save the battery warning

Power will turn off to save the battery

Under the specific conditions, this warning may appear after the ignition switch is in the ON position for a certain period of time.

Power turned off to save the battery warning

Power turned off to save the battery

Under the specific conditions, this warning may appear after the ignition switch is automatically turned OFF to save the battery.

Reminder Turn OFF Headlights warning



Reminder Turn OFF Headlights

This warning appears when the driver side door is opened with the headlight switch is left ON and the ignition switch is placed in the OFF position. Place the headlight switch in OFF (if so equipped) or AUTO position. For additional information, (See "Headlight and turn signal switch" (P.112).)

Headlight System Error: See Owner's Manual warning

Headlight System Error
See Owner's Manual

This warning appears if the LED headlights are malfunctioning. Have the system checked. It is recommended that you visit a NISSAN dealer for this service.

Time for a break? indicator



Time for a break?

This indicator appears when the set

Timer Alert activates. You can set the time for up to 6 hours.

Lane Departure Warning (LDW) indicator



This indicator appears when the Lane Departure Warning (LDW) system is engaged.

(See "Lane Departure Warning (LDW)" (P.216).)

Blind Spot Warning (BSW) indicator



This indicator appears when the Blind Spot Warning (BSW) system is engaged.

(See "Blind Spot Warning (BSW)" (P.221).)

Vehicle ahead detection indicator



This indicator shows the status of the following systems:

- Automatic Emergency Braking (AEB) with Pedestrian Detection
- Intelligent Forward Collision Warning (I-FCW)

(See "Automatic Emergency Braking (AEB) with Pedestrian Detection system" (P.250) or "Intelligent Forward Collision Warning (I-FCW)" (P.268).)

Cruise indicator



This indicator shows the conventional (fixed speed) cruise control mode status. The status is shown by the color.

(See "Conventional (fixed speed) cruise control mode" (P.246).)

Speed control status/set distance indicator



This indicator shows the status of the Intelligent Cruise Control (ICC) system. The status is shown by the color and shape. (See "Intelligent Cruise Control (ICC)" (P.230).)

Malfunction See Owner's Manual warning

Malfunction
See Owner's Manual

This warning appears when the following systems malfunction.

- Lane Departure Warning (LDW)
- Blind Spot Warning (BSW)
- Intelligent Cruise Control (ICC)
- Automatic Emergency Braking (AEB) with Pedestrian Detection
- Rear Cross Traffic Alert (RCTA)
- Intelligent Forward Collision Warning (I-FCW)
- Intelligent Driver Alertness (I-DA)

(See "Lane Departure Warning (LDW)" (P.216), "Blind Spot Warning (BSW)" (P.221), "Intelligent Cruise Control (ICC)" (P.230), "Automatic Emergency Braking (AEB) with Pedestrian Detection system" (P.250), "Rear Cross Traffic Alert (RCTA)" (P.261), "Intelligent Forward Collision Warning (I-FCW)" (P.268) or "Intelligent Driver Alertness (I-DA)" (P.277).)

Unavailable Camera Temperature High warning

Unavailable
Camera Temperature High

This warning appears if the interior temperature of the vehicle has reached such a high temperature that the sensor for the following system can no longer function reliably.

- Lane Departure Warning (LDW)

Once the interior temperature has reached normal levels, the warning should disappear.

If the warning continues to display, have the system checked. It is recommended that you visit a NISSAN dealer for this service.

For additional information, refer to "Lane Departure Warning (LDW)" (P.216).

Launch Control indicator (if so equipped)

Launch Control

This indicator appears when the Launch Control system is engaged.

(See "Launch Control (if so equipped)" (P.212).)

Currently Unavailable warning

Currently Unavailable

This warning appears when the Intelligent Cruise Control (ICC) system becomes unavailable in the following conditions:

- The Vehicle Dynamic Control (VDC) system is turned off
- The Traction mode is turned on (NISMO models)

For additional information, refer to "Intelligent Cruise Control (ICC)" (P.230).

Forward Driving Aids temporarily disabled Front Sensor blocked warning

Forward Driving Aids temporarily disabled
Front Sensor blocked
See Owner's Manual

If the front radar sensor area on the front of the vehicle is covered with dirt or obstructed, making it impossible to detect a vehicle ahead, the following system is automatically turned off.

- Intelligent Cruise Control (ICC)
- Automatic Emergency Braking (AEB) with Pedestrian Detection
- Intelligent Forward Collision Warning (I-FCW)

If the warning message appears, park the vehicle in a safe location and turn the engine off.

Check to see if the sensor area is blocked. If the sensor area is blocked, remove the blocking material. Restart the engine. If the warning message continues to appear, have the system checked. It is recommended that you visit a NISSAN dealer for this service.

For more details, see "Intelligent Cruise Control (ICC)" (P.230), "Automatic Emergency Braking (AEB) with Pedestrian Detection system" (P.250) or "Intelligent Forward Collision Warning (I-FCW)" (P.268).

Unavailable Side Radar Obstruction warning

Unavailable
Side Radar Obstruction

This warning appears when the following systems become unavailable because a radar blockage is detected.

- Blind Spot Warning (BSW)
- Rear Cross Traffic Alert (RCTA)

(See "Blind Spot Warning (BSW)" (P.221) or "Rear Cross Traffic Alert (RCTA)" (P.261).)

Unavailable Slippery Road warning

Unavailable
Slippery Road

This warning appears when the following system become unavailable because the road is slippery.

- Intelligent Cruise Control (ICC)

(See "Intelligent Cruise Control (ICC)" (P.230).)

Automatic Emergency Braking (AEB) emergency warning indicator



This warning indicator appears along with an audible warning, when the Automatic Emergency Braking (AEB) with Pedestrian Detection system detects the possibility of a forward collision.

See "Automatic Emergency Braking (AEB) with Pedestrian Detection system" (P.250).

Sonar system indicator



This indicator appears to indicate the status of the sonar system.

See "Front and rear sonar system" (P.280).

Parking Sensor Error warning

Parking Sensor Error
See Owner's Manual

This warning appears when there is a malfunction with the sonar system. (See "Front and rear sonar system" (P.280).)

Take a Break? indicator



Take a Break?

This indicator appears when the Intelligent Driver Alertness (I-DA) system detect that the driver attention is decreasing. (See "Intelligent Driver Alertness (I-DA)" (P.277).)

Neutral Hold Mode guidance indicator (Automatic transmission models)

To Exit Vehicle in Neutral;
Engine ON, Brake ON
Push P, shift into N twice

This indicator appears when the ignition switch is placed in the OFF position while the shift position is in the N (Neutral) position (Neutral hold mode is available). (See "Neutral hold mode function" (P.205).)

Neutral Hold Mode activated indicator (Automatic transmission models)

Neutral Hold Mode has been activated.
To exit this mode, please shift to a different gear.

This indicator appears when the Neutral hold mode is activated. To exit the Neutral hold mode, place the vehicle in other than N (Neutral) position. (See "Neutral hold mode function" (P.205).)

Neutral Hold Mode was not activated indicator (Automatic transmission models)

Neutral Hold Mode was not activated.

This indicator appears when the Neutral hold mode is unavailable. To activate the Neutral hold mode, wait for a while without shifting and then perform the operations again. (See "Neutral hold mode function" (P.205).)

Engine Oil Service due in – – – miles



Service due in – – – miles

This distance to oil change is displayed if the distance to oil change is less than 62 miles (100 km).

Drive Mode Selector indicator (for AT models and NISMO models)

SPORT

When a driving mode is selected using the Drive Mode Selector, the selected mode indicator is displayed.

- SPORT+ (for NISMO AT models)
- SPORT
- STANDARD

(See "Drive Mode Selector (for AT models and NISMO models)" (P.215).)

Engine hot Power reduced warning

Engine hot
Power reduced

This warning appears when the engine temperature is extremely high. If this warning appears, have the system checked. It is recommended that you visit a NISSAN dealer for this service.

Engine Stalled Stop safely warning

Engine Stalled
Stop safely

This warning appears when there is a malfunction with the engine system and the engine stops. If this warning appears, stop the vehicle in a safe place. Have the system checked. It is recommended you visit a NISSAN dealer for this service.

Engine Malfunction Power reduced Service now warning

Engine Malfunction
Power reduced
Service now

This warning appears when there is a malfunction with the engine system while driving. The engine and vehicle speed may be reduced. If this warning appears, have the system checked. It is recommended you visit a NISSAN dealer for this service.

Engine Malfunction Service now warning

Engine Malfunction
Service now

This warning appears when there is a malfunction with the engine system. If this warning appears, stop the vehicle in a safe place. If this warning appears, have the system checked. It is recommended you visit a NISSAN dealer for this service.

Traction Mode indicator (NISMO models)

TRACTION

This indicator appears when the Traction mode is selected by using the VDC OFF switch in the VDC system. (See "Vehicle Dynamic Control (VDC) OFF switch" (P.122) and "Vehicle Dynamic Control (VDC) system" (P.291).)

Shift P position warning (Automatic transmission models)



Shift P position

This warning appears if the engine stops or stalls when the vehicle is not in P (Park) position.

If this warning appears, stop the vehicle in a safe place and push the park button to engage the P (Park) position.

An inside warning chime will also sound.

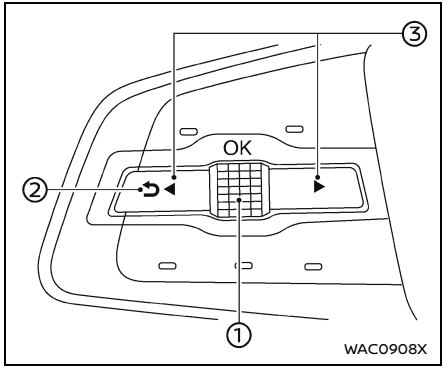

TRIP COMPUTER

Basic information

Switches for the trip computer are located on the left side of the steering wheel.

① Scroll dial - navigate through the items and change or select an item in vehicle information display

this scroll dial allows up/down navigation and push to select

② ↩ - go back to the previous menu

③ ◀ ▶ - change from one display screen to the next (i.e. trip, Fuel economy)

The displayed images may differ depending on the model.

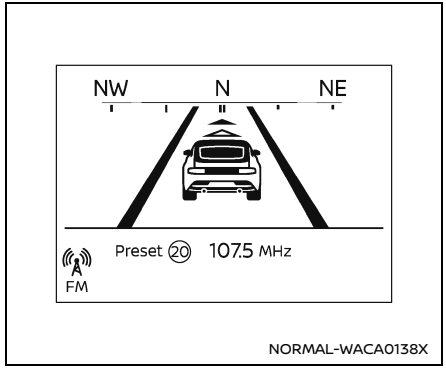

Home (if so equipped)

The Home mode shows the following information.

- Vehicle speed
- Navigation
- Audio

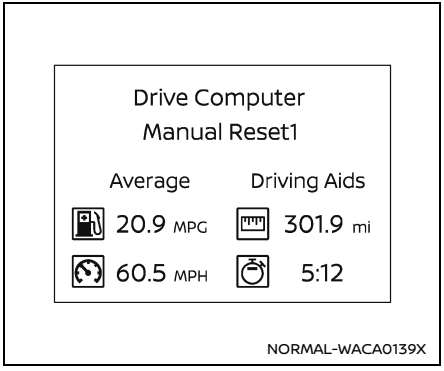

Drive Computer

Average fuel consumption:

The average fuel consumption shows the average fuel consumption since the last reset.

Average speed:

The average speed shows the average vehicle speed since the last reset.

Trip odometer:

The trip odometer shows the total distance the vehicle has been driven since the last reset.

Elapsed time:

The elapsed time shows the time since the last reset.

The Drive Computer mode have three modes of operation. You can switch between Manual Reset1, Manual Reset2 or Auto Refuel by pushing the scroll dial.

Manual Reset1 and Manual Reset2 can be reset manually by using the scroll dial.

Auto Refuel will be reset automatically each time when refueling.

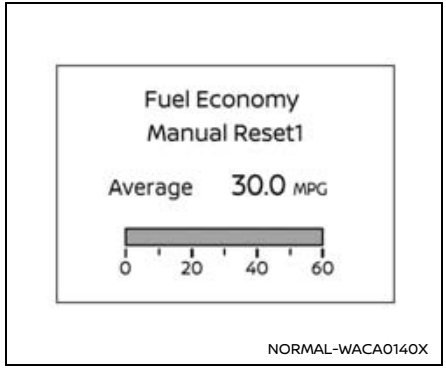

Fuel Economy display

Current fuel consumption:

The Fuel economy display mode shows the current fuel consumption.

Average fuel consumption:

The Fuel economy display mode shows the average fuel consumption since the last reset.

The Fuel economy display mode have three modes of operation. You can switch between Manual Reset1, Manual Reset2 or Auto Refuel by pushing the scroll dial.

Manual Reset1 and Manual Reset2 can be reset manually by using the scroll dial.

Auto Refuel will be reset automatically each time when refueling.

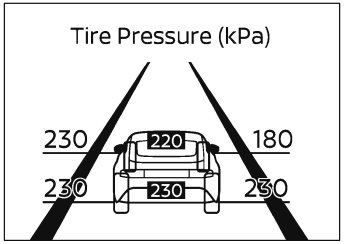

NORMAL-WACA0141X

Tire Pressures

The tire pressure mode shows the pressure of all four tires while the vehicle is driven.

When the Tire Pressure Low — Add Air warning appears, the display can be switched to the tire pressure mode by pushing the scroll dial to reveal additional details on the displayed warning.

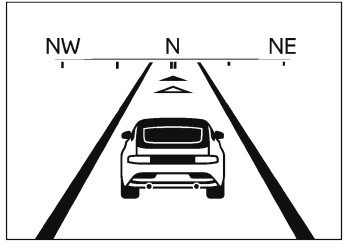

NORMAL-WACA0142X

Compass (if so equipped)

This display indicates the heading direction of the vehicle.

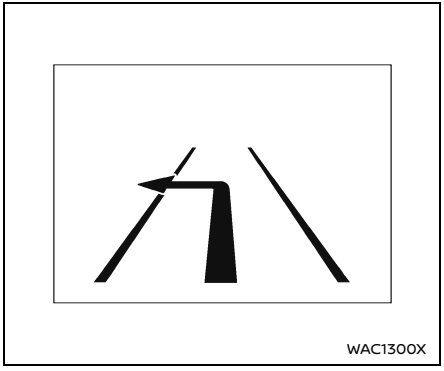

Navigation (if so equipped)

When the route guidance is set in the navigation system, this item shows the navigation route information.

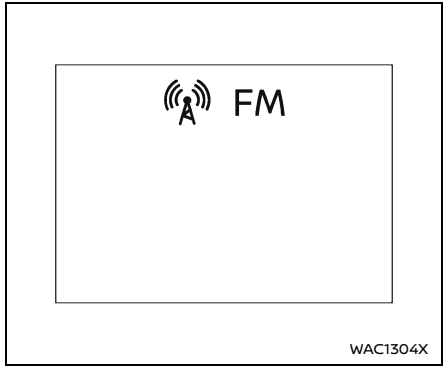

Audio

The audio mode shows the status of audio information.

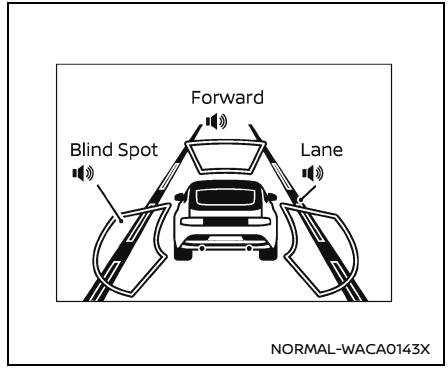

Driver Assistance

The Driver Assistance mode shows the operating condition for the following systems.

- Forward:
  - Automatic Emergency Braking (AEB) with Pedestrian Detection system
  - Intelligent Forward Collision Warning (I-FCW)
- Lane:
  - Lane Departure Warning (LDW)
- Blind Spot:
  - Blind Spot Warning (BSW)

For more details, see "Lane Departure

Warning (LDW)" (P.216), "Blind Spot Warning (BSW)" (P.221), "Automatic Emergency Braking (AEB) with Pedestrian Detection system" (P.250) or "Intelligent Forward Collision Warning (I-FCW)" (P.268).

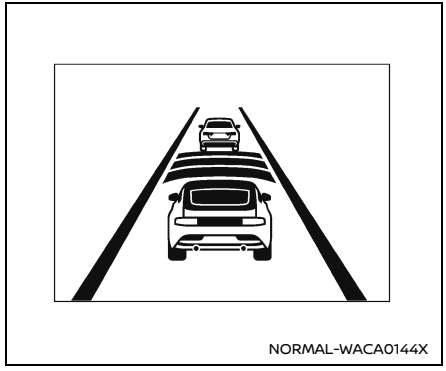

Intelligent Cruise Control (ICC) system

This mode shows the operating condition for the Intelligent Cruise Control (ICC) system. (See "Intelligent Cruise Control (ICC)" (P.230).)

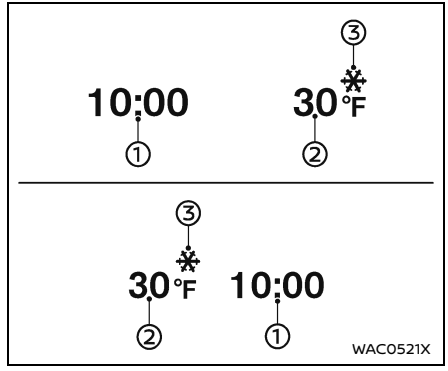

CLOCK AND OUTSIDE AIR TEMPERATURE

The clock ① and outside air temperature ② are displayed on the upper side of the vehicle information display.

Clock

For clock adjustment, see "Clock" (P.90) or the separate NissanConnect® Owner's Manual.

Outside air temperature (°F or °C)

The outside air temperature is displayed in °F or °C in the range of -22 to 140 °F (-30 to 60 °C).

The outside air temperature mode includes a low temperature warning fea-

ture. If the outside air temperature is below 27°F (−3°C), the indicator ③ is displayed.

The outside temperature sensor is located in front of the radiator. The sensor may be affected by road or engine heat, wind directions and other driving conditions. The display may differ from the actual outside temperature or the temperature displayed on various signs, billboards or media information.

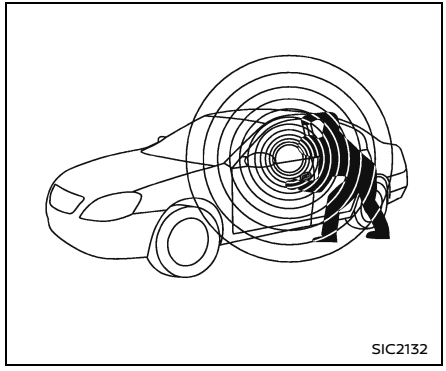
SIC2132

BASIC INFORMATION

Your vehicle has two types of security systems, as follows:

- Vehicle security system
- NISSAN Vehicle Immobilizer System

The security condition will be shown by the security indicator light.

VEHICLE SECURITY SYSTEM

Basic information

The vehicle security system provides visual and audio alarm signals if someone opens the doors, hood or rear hatch when the system is armed. It is not, however, a motion detection type system that activates when a vehicle is moved or when a vibration occurs.

The system helps deter vehicle theft but cannot prevent it, nor can it prevent the theft of interior or exterior vehicle components in all situations. Always secure your vehicle even if parking for a brief period. Never leave your Intelligent Key(s) in the vehicle, and always lock it when unattended. Be aware of your surroundings, and park in secure, well-lit areas whenever possible.

Many devices offering additional protection, such as component locks, identification markers, and tracking systems, are available at auto supply stores and specialty shops. Your NISSAN dealer may also offer such equipment. Check with your insurance company to see if you may be eligible for discounts for various theft protection features.

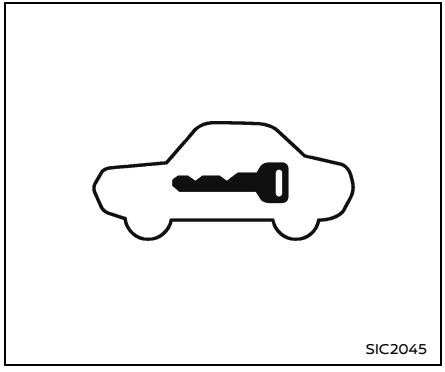

How to arm the vehicle security system

1. Close all windows.

   The system can be armed even if the windows are open.
2. Push the ignition switch to the OFF position.
3. Remove the Intelligent Key from the vehicle.
4. Close all doors, hood and rear hatch. Lock all doors. The doors can be locked with the Intelligent Key, door handle request switch or power door lock switch.
5. Confirm that the security indicator light comes on. The security indicator light stays on for about 30 seconds. The vehicle security system is now pre-armed. After about 30 seconds the vehicle security system automatically shifts into the armed phase. The security light begins to flash once every approximately 3 seconds. If, during this 30-second pre-arm time period, the door is unlocked, or the ignition switch is pushed to ACC or ON, the system will not arm.

Even when the driver and/or passengers are in the vehicle, the system will activate with all doors, hood and rear hatch locked with the ignition switch in the LOCK position. When pushing the ignition switch to the ACC or ON position, the system will be released.

Vehicle security system activation

The vehicle security system will give the following alarm:

- The headlights blink and the horn sounds intermittently.
- The alarm automatically turns off after approximately 1 minute. However, the alarm reactivates if the vehicle is tampered with again.

The alarm is activated by:

- Unlocking the door or opening the rear hatch without using the UNLOCK button on the Intelligent Key or the door handle request switch. (Even if the door is opened by releasing the door inside lock knob or using the mechanical key, the alarm will activate.)
- Opening the hood.

How to stop an activated alarm

The alarm will stop by unlocking a door by pushing the UNLOCK button on the Intelligent Key or the door handle request switch. The alarm will not stop if the ignition switch is pushed to the ACC or ON position.

If the Intelligent Key battery is discharged:

If the Intelligent Key battery is discharged, the alarm will not stop by pushing the UNLOCK button on the Intelligent Key or the door handle request switch. In such a case, unlock the driver's door using the mechanical key and touch the ignition switch with the Intelligent Key to stop the alarm. See "Intelligent Key battery discharge" (P.200).

If the system does not operate as described above, it is recommended

you have it checked by a NISSAN dealer.

NISSAN VEHICLE IMMOBILIZER SYSTEM

Basic information

The NISSAN Vehicle Immobilizer System will not allow the engine to start without the use of the registered Intelligent Key. **Never leave these keys in the vehicle.**

NOTE:
FCC Notice:
For USA:
This device complies with Part 15 of the FCC Rules. Operation is subject to the following two conditions: (1) this device may not cause harmful interference, and (2) this device must accept any interference received, including interference that may cause undesired operation.
NOTE:
Changes or modifications not expressly approved by the party responsible for compliance could void the user's authority to operate the equipment.
For Canada:
This device contains licence-exempt transmitter(s)/receiver(s) that comply with Innovation, Science and Economic Development Canada's licence-exempt RSS(s). Operation is subject to the following two conditions: (1) This device may not cause interference. (2) This device must accept any interference, including interference that may cause undesired operation of the device.

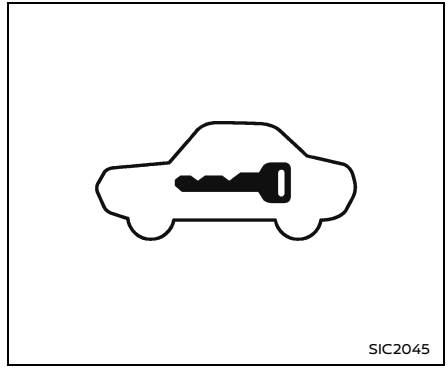

Security indicator light

The security indicator light is located on the meter panel. It indicates the status of the NISSAN Vehicle Immobilizer System.

The light blinks after the ignition switch is in the LOCK, ACC or OFF position. This function indicates the security systems equipped on the vehicle are operational.

If the NISSAN Vehicle Immobilizer System is malfunctioning, this light will remain on while the ignition switch is in the ON position.

If the light still remains on and/or the engine will not start, seek service for NISSAN Vehicle Immobilizer System as

soon as possible. Please bring all Intelligent Keys that you have. It is recommended you visit a NISSAN dealer for this service.

⚠ WARNING

In freezing temperatures the washer solution may freeze on the windshield and obscure your vision which may lead to an accident. Warm windshield with the defroster before you wash the windshield.

⚠ CAUTION

- **Do not operate the washer continuously for more than 30 seconds.**
- **Do not operate the washer if the reservoir tank is empty.**
- **Do not fill the window washer reservoir tank with washer fluid concentrates at full strength. Some methyl alcohol based washer fluid concentrates may permanently stain the grille if spilled while filling the window washer reservoir tank.**
- **Pre-mix washer fluid concentrates with water to the manufacturer's recommended levels before pouring the fluid into the window washer reservoir tank. Do not use the window washer reservoir tank to mix the washer fluid concentrate and water.**

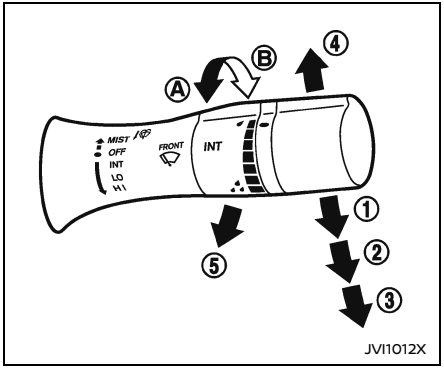

The windshield wiper and washer operates when the ignition switch is in the ON position.

Push the lever down to operate the wiper at the following speed:

① Intermittent — intermittent operation can be adjusted by turning the knob toward Ⓐ (Slower) or Ⓑ (Faster).

When the speed sensing wiper interval function is turned on, the intermittent operation speed varies in accordance with the vehicle speed. (For example, when the vehicle speed is high, the intermittent operation speed will be faster.)

② Low — continuous low speed operation

③ High — continuous high speed operation

Push the lever up ④ to have one sweep operation of the wiper.

Pull the lever toward you ⑤ to operate the washer. Then the wiper will also operate several times.

Wiper drip wipe system:

The wiper will also operate once about 3 seconds after the washer and wiper are operated. This operation is to wipe washer fluid that has dripped on the windshield.

To activate or deactivate this function, see "Vehicle Settings" (P.90).

REAR WINDOW DEFROSTER SWITCH

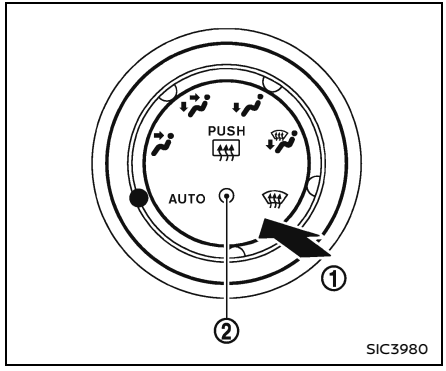

To defog/defrost the rear window glass and outside mirrors, start the engine and push the switch ① on. The indicator light ② will come on. Push the switch again to turn the defroster off.

It will automatically turn off in approximately 15 minutes.

⚠ CAUTION

When cleaning the inner side of the rear window, be careful not to scratch or damage the rear window defroster.

HEADLIGHT AND TURN SIGNAL SWITCH

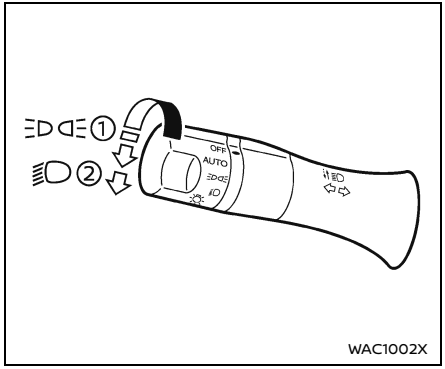

HEADLIGHT SWITCH

Lighting

Type A (if so equipped):

① Turn the switch to the position:
The front parking, side marker, tail, license plate, instrument lights and daytime running lights will come on.

② Turn the switch to the position:
Headlights will come on and all the other lights remain on. However, the daytime running lights will turn off.

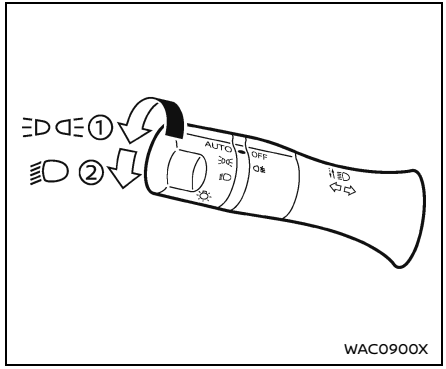

Type B (if so equipped):

① Turn the switch to the position:
The front parking, side marker, tail, license plate, instrument lights and daytime running lights will come on.

② Turn the switch to the position:
Headlights will come on and all the other lights remain on. However, the daytime running lights will turn off.

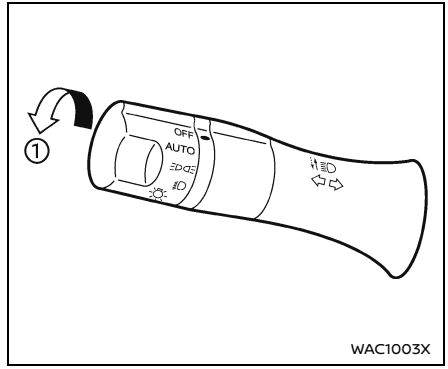

Autolight system

Type A (if so equipped):

The autolight system allows the headlights to be set so they turn on and off automatically.

To set the autolight system:

1. Make sure the headlight switch is in the AUTO position ①.
2. Place the ignition switch in the ON position.
3. The autolight system automatically turns the headlights on and off.

To turn the autolight system off, turn the switch to the OFF, or position.

The autolight system can turn on the headlights automatically when it is dark and turn off the headlights when it is light.

The headlights will also be turned on automatically at twilight.

If the ignition switch is pushed to the OFF position and one of the doors is opened and this condition is continued, the headlights remain on for 5 minutes.

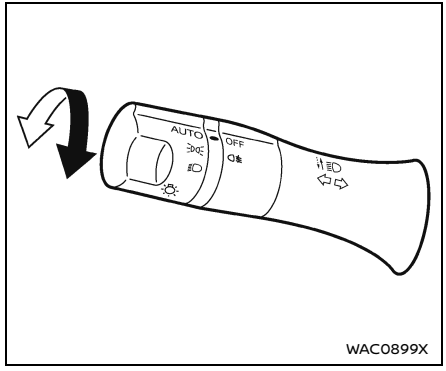

WAC0899X

Type B (if so equipped):

The autolight system allows the headlights to be set so they turn on and off automatically.

To set the autolight system:

1. Make sure the headlight switch is in the AUTO or ≡D◁≡ position.
2. Place the ignition switch in the ON position.
3. The autolight system automatically turns the headlights on and off.

To turn the autolight system off, turn the switch to the ≡D position.

The autolight system can turn on the headlights automatically when it is dark and turn off the headlights when it is light.

The headlights will also be turned on automatically at twilight.

If the ignition switch is placed in the ON position when the parking brake is applied, the headlights remain off.

With the ≡D◁≡ position selected, the headlights turn off when the ignition switch is placed in the OFF position, the shift position is in the P (Park) position, or the parking brake is applied. (The front parking, tail, license plate, and instrument lights are on.)

How to turn off all lights:

With the AUTO position selected, all lights turn off when the engine is restarted after the parking brake is applied.

NOTE:

When driving at night, the headlights remain on and cannot be turned off.

When the vehicle is stopped, the headlights can be turned off when the headlight switch is in the ≡D◁≡ position.

With the AUTO position selected (headlights are on), the headlights will remain on for 5 minutes when the ignition switch is placed in the OFF position and one of the doors is opened.

Automatic headlights off delay:

You can keep the headlights on for up to 180 seconds after you place the ignition switch in the OFF position and open any door then close all the doors.

You can adjust the period of the automatic headlights off delay from 0 seconds (OFF) to 180 seconds. The factory default setting is 45 seconds.

For automatic headlights off delay setting, see "Vehicle Settings" (P.90).

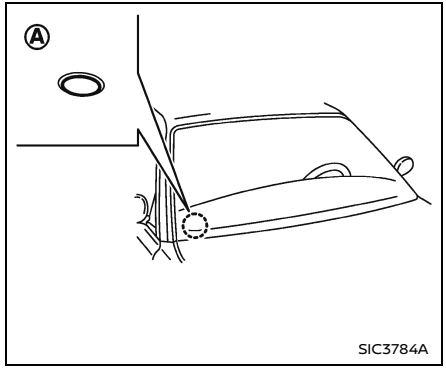

Be sure not to put anything on top of the photo sensor Ⓐ located on the top of the instrument panel. The photo sensor controls the autolight; if it is covered, the photo sensor reacts as if it is dark and the headlights will illuminate.

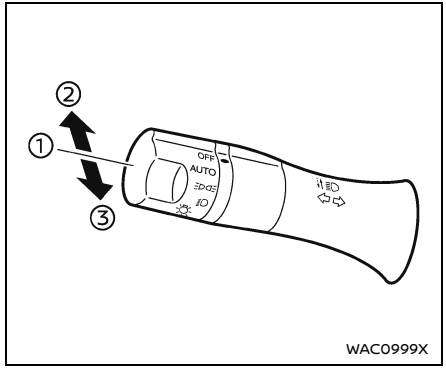

Example

Headlight beam select

① To select the low beam, put the lever in the neutral position as shown.

② To select the high beam, push the lever forward while the switch is in the position. Pull it back to select the low beam.

③ Pulling the lever toward you will flash the headlight high beam even when the headlight switch is in the OFF position (if so equipped).

High beam assist

The high beam assist system will operate

when the vehicle is driven at speeds of approximately 22 MPH (35 km/h) and above. If an oncoming vehicle or leading vehicle appears in front of your vehicle when the headlight high beam is on, the headlight will be switched to the low beam automatically.

Precautions on high beam assist:

WARNING

- **The high beam assist system is a convenience but it is not a substitute for safe driving operation. The driver should remain alert at all times, ensure safe driving practices and switch the high beams and low beam manually when necessary.**
- **The high beam or low beam may not switch automatically under the following conditions. Switch the high beam and low beam manually.**
  - **During bad weather (rain, fog, snow, wind, etc.).**
  - **When a light source similar to a headlight or tail light is in the vicinity of the vehicle.**
  - **When the headlights of the oncoming vehicle or the leading vehicle are turned off, when the color of the light is affected due to foreign materials on the lights, or when the light beam is out of position.**
  - **When there is a sudden, continuous change in brightness.**
  - **When driving on a road that passes over rolling hills, or a road that has level differences.**
  - **When driving on a road with many curves.**
  - **When a sign or mirror-like surface is reflecting intense light towards the front of the vehicle.**
  - **When the container, etc. being towed by a leading vehicle is reflecting intense light.**
  - **When a headlight on your vehicle is damaged or dirty.**
  - **When the vehicle is leaning at an angle due to a punctured tire, being towed, etc.**
- **The timing of switching the low beam and high beam may change under the following situations.**
  - **The brightness of the headlights of the oncoming vehicle or leading vehicle.**
  - **The movement and direction of the oncoming vehicle and the leading vehicle.**
  - **When only one light on the oncoming vehicle or the leading vehicle is illuminated.**
  - **When the oncoming vehicle or the leading vehicle is a two-wheeled vehicle.**
  - **Road conditions (incline, curve, the road surface, etc.).**
  - **The number of passengers and the amount of luggage.**

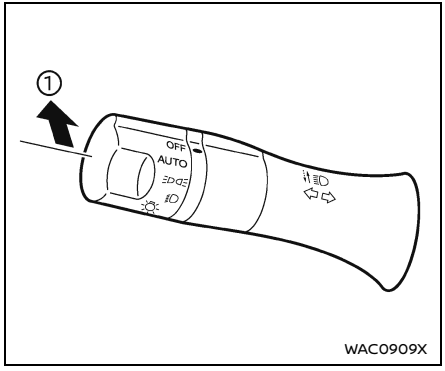

Example

High beam assist operations:

To activate the high beam assist system, turn the headlight switch to the AUTO position or ≡D position (for Canada) and push the lever forward ① (high beam position). The high beam assist indicator light in the meter will illuminate while the headlights are turned on.

If the high beam assist indicator light does not illuminate in the above condition, it may indicate that the system is not functioning properly. It is recommended you have the system checked by a NISSAN dealer.

When the vehicle speed lowers to less than approximately 17 MPH (27 km/h), the headlight remains the low beam.

To turn off the high beam assist system, turn the headlight switch to the position or select the low beam position by placing the lever in the neutral position.

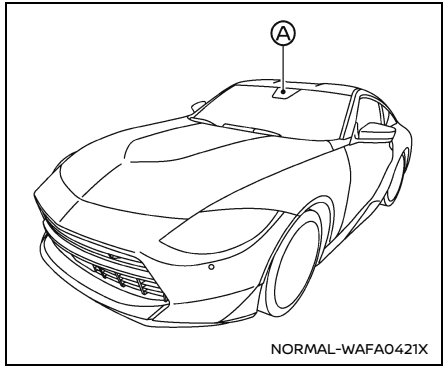

Ambient image sensor maintenance:

The ambient image sensor Ⓐ for the high beam assist system is located in front of the inside mirror. To keep the proper operation of the high beam assist system and prevent a system malfunction, be sure to observe the following:

- Always keep the windshield clean.
- Do not attach a sticker (including transparent material) or install an accessory near the ambient image sensor.
- Do not strike or damage the areas around the ambient image sensor. Do not touch the sensor lens that is located on the ambient image sensor.

If the ambient image sensor is damaged due to an accident, it is recommended you contact a NISSAN dealer.

Battery saver system

A chime will sound when the driver side door is opened with the light switch in the ≡D⊂ or 🔦 position and the ignition switch in the ACC, OFF or LOCK position.

When the headlight switch is in the ≡D⊂ or 🔦 position while the ignition switch is in the ON position, the lights will automatically turn off after a period of time when the ignition switch has been pushed to the OFF position.

When the headlight switch remains in the ≡D⊂ or 🔦 position after the lights automatically turn off, the lights will turn on when the ignition switch is pushed to the ON position.

⚠ CAUTION

- **When you turn on the headlight switch again after the lights automatically turn off, the lights will not turn off automatically. Be sure to turn the light switch to the OFF position (if so equipped) or AUTO position when you leave the vehicle for extended periods of time, otherwise the battery will be discharged.**
- **Never leave the light switch on when the engine is not running for extended periods of time even if the headlights turn off automatically.**

Daytime running light system

Type A (if so equipped):

The daytime running lights automatically illuminate when the engine is started with the parking brake released. The daytime running lights operate with the headlight switch in the OFF, AUTO (when the headlights are off) or ≡D⊂ position. Turn the headlight switch to the 🔦 position for full illumination when driving at night.

If the parking brake is applied before the engine is started, the daytime running lights do not illuminate. The daytime running lights illuminate once the parking brake is released. The daytime running lights will remain on until the ignition switch is pushed to the OFF position.

Type B (if so equipped):

The daytime running lights automatically illuminate when the engine is started with the parking brake released. The daytime running lights operate with the headlight switch in the AUTO or ≡D⊂ position, when the headlights are off. Turn the headlight switch to the 🔦 position for full illumination when driving at night.

If the parking brake is applied before the engine is started, the daytime running lights do not illuminate. The daytime running lights illuminate once the parking brake is released. The daytime running lights will remain on until the ignition switch is pushed to the OFF position.

⚠ WARNING

When the daytime running light system is active with the headlight switch in the OFF position (if so equipped), tail lights on your vehicle are not on. It is necessary at dusk to turn on your headlights. Failure to do so could cause an accident injuring yourself and others.

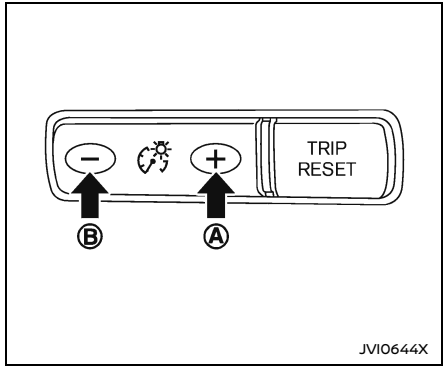

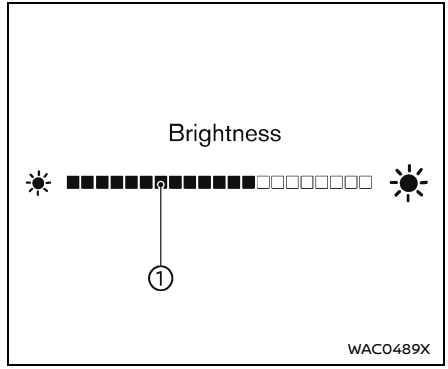

Instrument brightness control

The instrument brightness control switch can be operated when the ignition switch is in the ON position. When the switch is operated, the vehicle information display switches to the brightness adjustment mode.

Push the + side of the switch Ⓐ to brighten the instrument panel lights. The bar ① moves to the right side.

Push the - side of the switch Ⓑ to dim the instrument panel lights. The bar ① moves to the left side. When the brightness level reaches the minimum, the instrument panel lights will turn off during the night-

time.

When the brightness level reaches the maximum or minimum, a beep will sound.

The vehicle information display returns to the normal display when the instrument brightness control switch is not operated for more than 5 seconds.

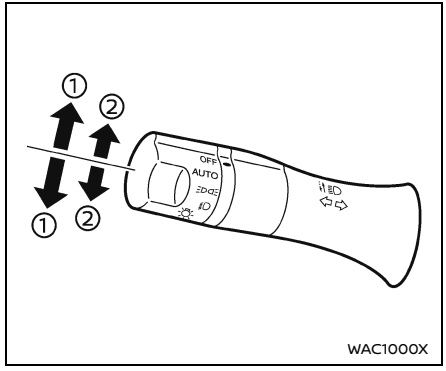

Example

TURN SIGNAL SWITCH

① Turn signal

Move the lever up or down to signal the turning direction. When the turn is completed, the turn signals cancel automatically.

② Lane change signal

Move the lever up or down until the turn signal begins to flash, but the lever does not latch, to signal a lane change. Hold the lever until the lane change is completed.

Move the lever up or down until the turn signal begins to flash, but the lever does not latch, and release the lever. The turn signal will automatically flash three times.

Choose the appropriate method to signal a lane change based on road and traffic conditions.

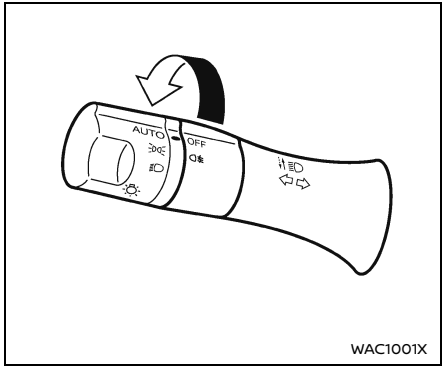

WAC1001X

FOG LIGHT SWITCH (if so equipped)

To turn on the rear fog light, turn the headlight switch to the position, then turn the fog light switch to the position.

To turn on the rear fog light with the headlight switch in the AUTO position or position (for Canada), the headlights must be on, then turn the fog light switch to the position.

The switch returns to the OFF position automatically, and the rear fog light will illuminate.

Make sure the indicator light on the instrument panel illuminates.

To turn off the rear fog light, turn the fog light switch to the position again.

Make sure the indicator light on the instrument panel turns off.

HORN

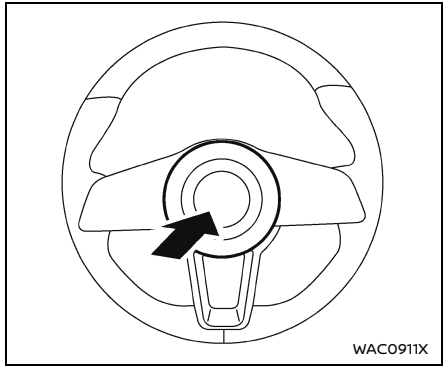
WAC0911X

To sound the horn, push the center pad area of the steering wheel.

⚠ WARNING

Do not disassemble the horn. Doing so could affect proper operation of the supplemental front air bag system. Tampering with the supplemental front air bag system may result in serious personal injury.

HEATED SEATS (if so equipped)

⚠ WARNING

Do not use or allow occupants to use the seat heater if you or the occupants cannot monitor elevated seat temperatures or have an inability to feel pain in those body parts in contact with the seat. Use of the seat heater by such people could result in serious injury.

⚠ CAUTION

- **The battery could run down if the seat heater is operated while the engine is not running.**
- **Do not use the seat heater for extended periods or when no one is using the seat.**
- **Do not put anything on the seat which insulates heat, such as a blanket, cushion, seat cover, etc. Otherwise, the seat may become overheated.**
- **Do not place anything hard or heavy on the seat or pierce it with a pin or similar object. This may result in damage to the heater.**
- **Any liquid spilled on the heated seat should be removed immediately with a dry cloth.**
- **When cleaning the seat, never use gasoline, thinner, or any similar materials.**
- **If any malfunctions are found or the heated seat does not operate, turn the switch off and have the system checked. It is recommended you visit a NISSAN dealer for this service.**

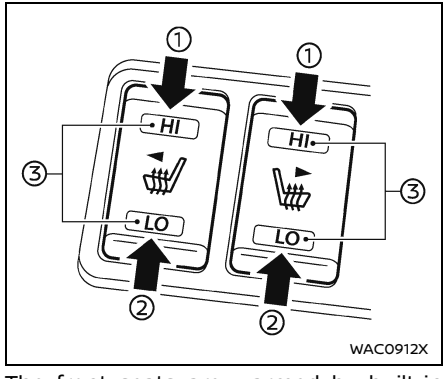

The front seats are warmed by built-in heaters. The switches located on the center console can be operated independently of each other.

1. Start the engine.
2. Select the desired heat range.
   - For high heat, push the HI side of the switch ①.
   - For low heat, push the LO side of the switch ②.
   - The indicator light ③ will illuminate when the heater is on.

3. To turn off the heater, return the switch to the level position. Make sure that the indicator light turns off.

   The heater is controlled by a thermostat, automatically turning the heater on and off. The indicator light will remain on as long as the switch is on.

   When the vehicle's interior is warmed, or before you leave the vehicle, be sure to turn off the switch.

VEHICLE DYNAMIC CONTROL (VDC) OFF SWITCH

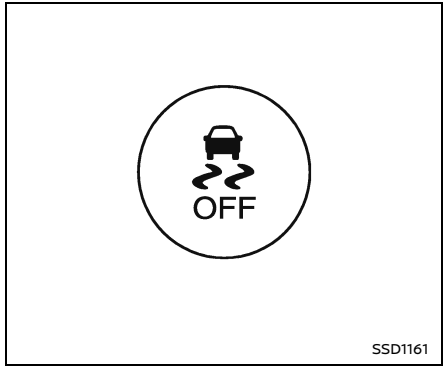

The vehicle should be driven with the Vehicle Dynamic Control (VDC) system on for most driving conditions.

If the vehicle is stuck in mud or snow, the VDC system reduces the engine output to reduce wheel spin. The engine speed will be reduced even if the accelerator is depressed to the floor. If maximum engine power is needed to free a stuck vehicle, turn the VDC system off or select the Traction mode (for NISMO models).

Except for NISMO models:

To turn off the VDC system, push and hold the VDC OFF switch. The OFF indicator light will illuminate.

For NISMO models:

To turn on the Traction mode and turn off the VDC system, perform the following steps:

1. Push and hold the VDC OFF switch. The Traction mode will be selected. The OFF indicator light and the Traction Mode indicator will illuminate. (See "Traction Mode indicator (NISMO models)" (P.101).)
2. Push and hold the VDC OFF switch again. The VDC system will be turned off. The OFF indicator light will remain on. The Traction Mode indicator will go off.

Push the VDC OFF switch again or restart the engine to turn on the system. (See "Vehicle Dynamic Control (VDC) system" (P.291).)

POWER OUTLET

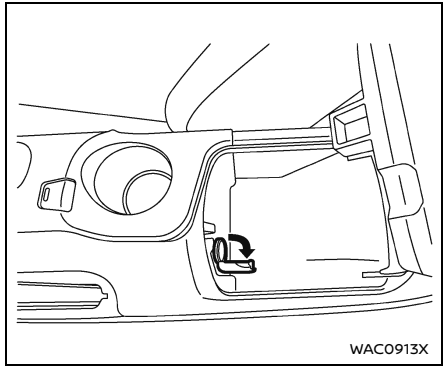

Center console

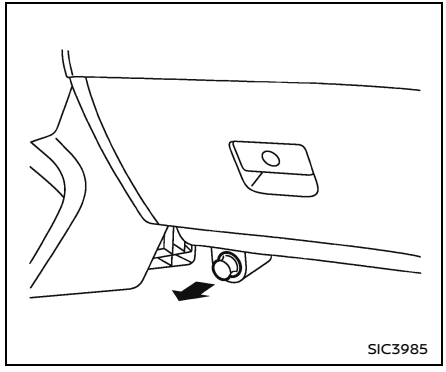

Lower glove box

BASIC INFORMATION

The power outlet is located in the center console and on the lower glove box.

⚠ CAUTION

- **The outlet and plug may be hot during or immediately after use.**
- **Do not use with accessories that exceed a 12 volt, 120W (10A) power draw. Do not use double adapters or more than one electrical accessory.**
- **Use power outlet with the engine running to avoid discharging the vehicle battery.**
- **Avoid using power outlet when the air conditioner, headlights or rear window defroster is on.**
- **This power outlet is not designed for use with a cigarette lighter unit.**
- **Push the plug in as far as it will go. If good contact is not made, the plug may overheat or the internal temperature fuse may blow.**
- **Before inserting or disconnecting a plug, be sure the electrical accessory being used is turned OFF.**
- **When not in use, be sure to close the cap. Do not allow water or any liquid to contact the outlet.**

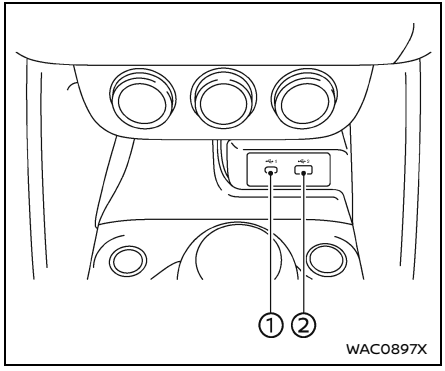

Example

① Type C USB charging connector
② Type A USB charging connector

USB (Universal Serial Bus) CHARGING CONNECTOR

The USB charging connector is located on the front of the center console.

The USB charging connector can be used for charging an external device.

Connect a USB device into the connector. Charging will start automatically (maximum output up to 5volt, 12W, 2.4A (Type-A) and 5volt, 15W, 3A (Type-C)).

The external device will be charged continuously while the ignition switch is in the ON position.

Some mobile devices cannot be charged depending on their specifications.

⚠ CAUTION

- **Do not force a USB device into the connector. Depending on the USB connector, inserting the USB device tilted or upside down may damage the connector. Make sure that the USB device is connected correctly into the connector.**
- **Do not use a reversible USB cable. Using the reversible USB cable may damage the connector.**

NOTE:
For best results, it is recommended that you use manufacturer-branded cables, or USB adapter, which may be sold separately. See your device's owner's information for more details.

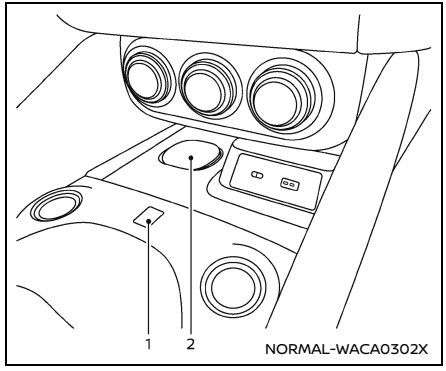

Example

1. Indicator
2. Charging pad

MAGNETIC WIRELESS CHARGER (if so equipped)

Only a Qi or Qi2 compatible smartphone can be used.

The magnetic wireless charger is located on the front of the center console. Place the smartphone on the center of the charging pad (2). Charging will start automatically. The smartphone will be charged continuously while the ignition switch is in the ON position.

⚠ WARNING

- **Never put metallic materials such as coins between the wireless charger and a smartphone.**
- **Those who use an implantable cardiac pacemaker, an implantable cardioverter defibrillator (ICD), or other medical equipment should contact the electric medical equipment manufacturer for the possible influences before use.**
- **Never put cloth over the smartphone during charging process. Never charge a smartphone when it is wet.**
- **Never put metallic materials or small goods such as a cigarette lighter, Intelligent Key or memory drive.**

⚠ CAUTION

- **Do not put an RFID/NFC/credit card, magnetic stripe card, data storage device, or smart watch between the wireless charger and a smartphone. This could cause data corruption.**
- **Do not use the wireless charger with dust accumulated or dirt on the pad.**
- **Do not hit the surface of the wireless charger.**
- **Do not spill liquid (water, drinks, etc.) on the charging pad.**
- **Do not use grease or oil for cleaning charging pad.**

Wireless charger indicator

The indicator (1) will illuminate in orange when the charging process is started.

When the charging has completed, the indicator illuminates in green.

If a malfunction occurs or metallic materials is detected, the charging process has stopped, and the indicator will blink in orange for 8 seconds then turn off.

Wireless charger operation

To use the magnetic wireless charger, place your phone on the center of the charging pad (2). If you are using a compatible device or accessory, magnetic alignment will assist in securing the device in the optimal charging position. To optimize the charging performance, use a Qi2 compatible phone or phone case equipped with a magnetic ring.

NOTE:

- **The smartphone may be warmed during charging process and the charging may stop by the protection function of the wireless charger. This is not a malfunction. If this occurs, restart charging after the smartphone has cooled down. The indicator will blink in orange then turn off.**
- **The wireless charging process may be limited or stopped by the status of the smartphone (battery temperature, etc.) and surrounding environment. In particular, if the interior of a vehicle is excessively hot, charging may not function properly. If this occurs, using the charging feature after the cabin temperature has decreased.**
- **Android smartphones and iPhones that do not have built-in magnets may not remain properly aligned on the charging pad, which can result in unsuccessful charging. To ensure stable positioning and effective charging, please use a case that complies with the Qi2 standard.**
- **Even if smartphone supports the Qi2 standard, wireless charging may not work properly if you are using a case without built-in magnets.**

- **The wireless charging process will stop during process of searching for the Intelligent Key and the indicator will turn off.**
- **The wireless charging process will not be started when a USB (Universal Serial Bus) cable is connected to the smartphone. The indicator may illuminate in orange or blink if the smartphone is put on the wireless charger with a USB cable connected. However, charging is not performed.**
- **Depending on radio reception conditions, electromagnetic signals from the wireless charger may cause noise in radio audio.**
- **Depending on the type of the smartphone, the indicator may remain illuminated in orange even when the charging process has been completed.**
- **Charging performance may be affected by smartphone operating system updates. For more information, please contact device manufacturer.**
- **The charging pad can be used as a storage space while a Qi or Qi2 compatible smartphone is not placed.**

This device complies with part 15 of the FCC Rules and RSS-Gen of IC Rules.

Operation is subject to the following two conditions:

(1) This device may not cause harmful interference, and

(2) This device must accept any interference received, including interference that may cause undesired operation.

Changes or modifications not expressly approved by the party responsible for compliance could void the user's authority to operate the equipment.

RF Radiation Exposure Statement: This equipment complies with FCC RF Radiation exposure limits set forth for an uncontrolled environment.

This device and its antenna must not be co-located or operating in conjunction with any other antenna or transmitter.

This equipment should be installed and operated with a minimum distance of 15cm between the radiator and your body.

ISED Compliance Statement

This device complies with RSS-Gen of IC Rules

Operation is subject to the following two conditions:

(1) This device may not cause harmful interference, and

(2) This device must accept any interference received, including interference that may cause undesired operation.

Changes or modifications made to this device, not expressly approved by the party responsible for compliance will void the user's authority to operate the equipment.

ISED RF Radiation Exposure Statement: This equipment complies with ISED RF Radiation exposure limits set forth for an uncontrolled environment. This device and its antenna must not be co-located or operating in conjunction with any other antenna or transmitter. This equipment should be installed to operate with a minimum distance of 15 cm between the radiator and the end-user's body and arms.

EMERGENCY CALL (SOS) BUTTON (if so equipped)

EMERGENCY SUPPORT

Basic information

NissanConnect® Services provide various services to support dealing with emergencies of the subscribed vehicle and the driver.

For example, in case of an illness or serious injury, you can seek support by pushing the in-vehicle Emergency Call (SOS) button and connecting to the NissanConnect® Services Response Center. The NissanConnect® Services Response Center can specify the location of the vehicle via GPS, and the information will be sent to the police or other agencies as needed.

For information about other NissanConnect® Services emergency support related services, contact the NissanConnect® Customer Support line at 1-855-426-6628 or refer to the NissanConnect® Services website www.nissanusa.com/connect (for U.S.) or www.nissan.ca/nissanconnect (English)/www.nissan.ca/nissanconnect/fr (French) (for Canada).

⚠ WARNING

- **Please note that the Automatic Collision Notification service and Emergency Call function cannot be used in the following conditions:**
  - **Emergency functions and services will not be available without a paid subscription to NissanConnect® Services.**
  - **The NissanConnect® Services network system is disabled.**
  - **The vehicle moves outside the service area where the TCU (Telematics Control Unit) is connected to the system.**
  - **The vehicle is outside the area where the cellular network service is receivable.**
  - **The vehicle is in a location with poor signal reception such as tunnels, underground parking garages, behind buildings or in mountainous areas.**
  - **The line is busy.**
  - **The TCU (Telematics Control Unit) or other systems of your vehicle are not working properly.**
  - **It may not be possible to make an emergency call depending on the severity of a collision and/or emergency.**
- **Park the vehicle in a safe location and set the parking brake before operating the Emergency Call (SOS) button.**
- **Only use this service in case of an emergency. There may be a penalty for inappropriate use of the service.**
- **Radio waves could adversely affect electric medical equipment. Individuals who use a pacemaker should contact the device manufacturer regarding any possible effects before using the system.**
- **The TCU (Telematics Control Unit) antenna is installed inside the upper central part of the instrument panel. An occupant should not get any closer to the antenna than specified by the pacemaker manufacturer. The radio waves from the TCU antenna may adversely affect the operation of the pacemaker while using the NissanConnect® Services.**

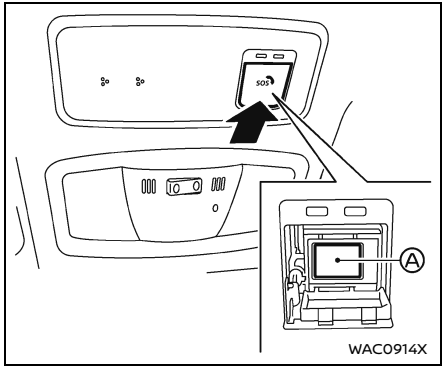

Making an emergency call

The Emergency Call (SOS) button is located near the map light.

1. Push the cover to expose the Emergency Call (SOS) button Ⓐ.
2. Push the Emergency Call (SOS) button to make an emergency call.
3. When the line is connected, speak to the Response Specialist.

If you want to cancel the emergency call, push and hold the Emergency Call (SOS) button for a few seconds.

NOTE:

- **After the Emergency Call (SOS) button is pushed, it may take some time until the system initiates connection, depending on the technical environment and whether the TCU (Telematics Control Unit) is being used by other services.**
- **An indicator light on the Emergency Call (SOS) button shows the readiness of the emergency support system. If the indicator light is not illuminated, pushing the Emergency Call (SOS) button does not connect your vehicle to the Response Specialist.**

  The indicator light blinks while connected to the NissanConnect® Services Response Center.
- **Even when the indicator light is illuminated, connection to the NissanConnect® Services Response Center may not be possible. If this occurs in an emergency situation, contact the authorities by other means.**
- **To avoid disconnecting the line, keep the engine running during an emergency call, if it is safe to do so.**

CUP HOLDERS

Basic information

⚠ CAUTION

- **Avoid abrupt starting and braking when the cup holder is being used to prevent spilling the drink. If the liquid is hot, it can scald you or your passenger.**
- **Use only soft cups in the cup holder. Hard objects can injure you in an accident.**

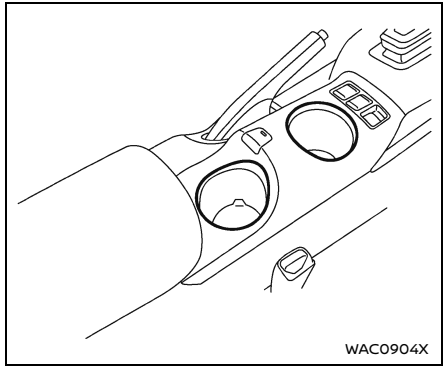

The cup holders are located on the center console.

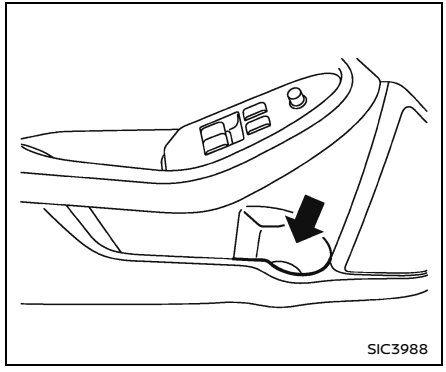

Soft bottle holder

⚠ CAUTION

- **Do not use bottle holder for any other objects that could be thrown about in the vehicle and possibly injure people during sudden braking or an accident.**
- **Do not use bottle holder for open liquid containers.**

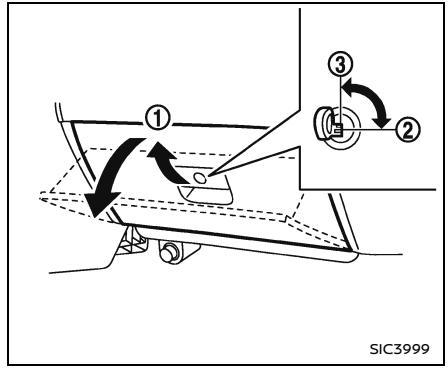

GLOVE BOX

⚠ WARNING

Keep glove box lid closed while driving to help prevent injury in an accident or a sudden stop.

To open the glove box, pull the handle ①.

To close, push the lid in until the lock latches.

To lock ②/unlock ③ the glove box, use the mechanical key. For the mechanical key usage, see "Keys" (P.144).

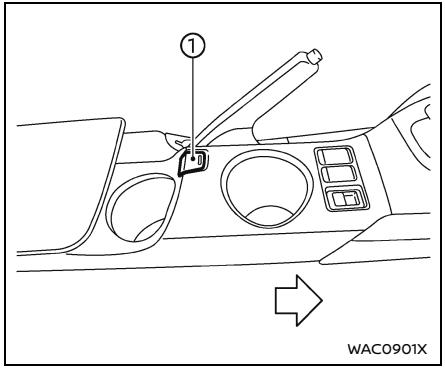

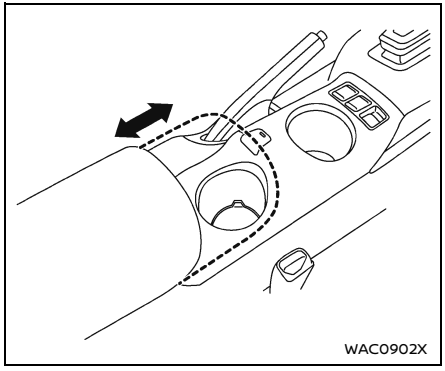

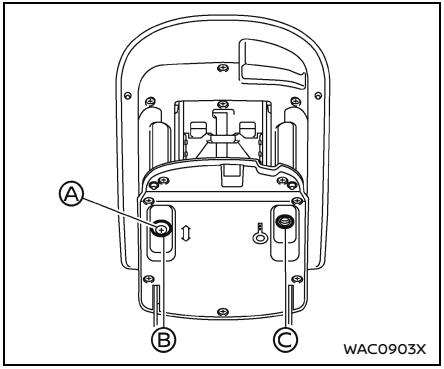

CONSOLE BOX

To open the console box, push the button ① and pull up the lid.

To close, push the lid down until latched.

The position of the console lid can be adjusted to your desired position. Slide the lid to forward or backward to the desired position.

The slide function can be locked when the lid is in maximum forward by tightening the screw Ⓐ in the Ⓒ position. When not using the lock function, tighten the screw Ⓐ in the Ⓑ position.

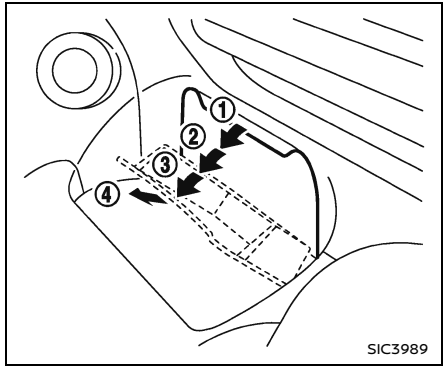

REAR PARCEL BOX

The rear parcel box is located behind the right-side seat.

To open the rear parcel box, pull the upper part of the lid to position ① or ②.

To remove the rear parcel box, pull the lid to position ③ with a greater force until it unlatches. And then, pull the rear parcel box to direction ④.

To install, make sure the two hinges of the rear parcel box engaged with the holders, then perform the steps above in the reverse order.

⚠ WARNING

Keep the rear parcel box lid closed while driving to help prevent injury in an accident or a sudden stop.

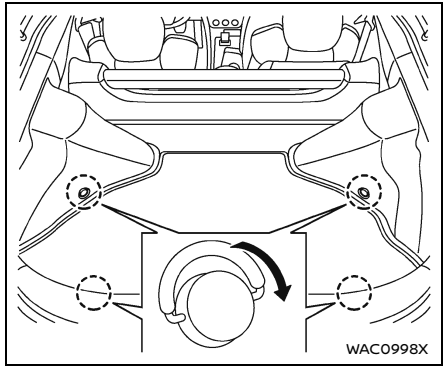

REAR HATCH HOOKS

⚠ WARNING

- **Always make sure that the cargo is properly secured. Use the suitable ropes and hooks.**
- **Unsecured cargo can become dangerous in an accident or sudden stop.**

⚠ CAUTION

Do not apply a total load of more than 22 lb (10 kg) to a single hook.

NOTE:

- **Do not use the car without the cargo mat, and avoid parking it in direct sunlight for extended periods without the cargo mat. The color may fade if luggage in the cargo area rubs against the interior or if the car is left in the sun for a prolonged period.**

POWER WINDOWS

Basic information

⚠ WARNING

- **Make sure that all passengers have their hands, etc. inside the vehicle while it is in motion and before closing the windows. Use the window lock switch to prevent unexpected use of the power windows.**
- **To help avoid risk of injury or death through unintended operation of the vehicle and or its systems, including entrapment in windows or inadvertent door lock activation, do not leave children, people who require the assistance of others or pets unattended in your vehicle. Additionally, the temperature inside a closed vehicle on a warm day can quickly become high enough to cause a significant risk of injury or death to people and pets.**

The power windows operate when the ignition switch is in the ON position or for about 45 seconds after the ignition switch is pushed to the OFF position. If the driver's or front passenger's door is opened during this period of about 45 seconds, power to the windows is canceled.

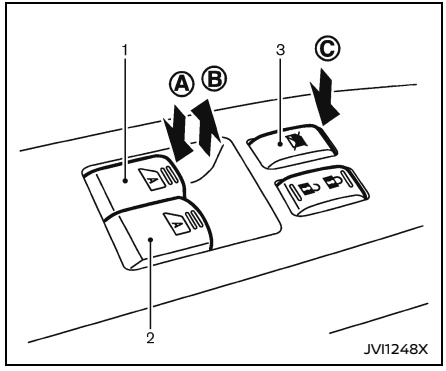

1. Driver side window
2. Front passenger side window
3. Window lock button

Main power window switch (driver's side)

To open or close the window, push down Ⓐ or pull up Ⓑ the switch and hold it. The main switch (driver side switches) will open or close all the windows.

Locking passenger's window

When the lock button Ⓒ is pushed in, only the driver side window can be opened or closed. Push it in again to cancel.

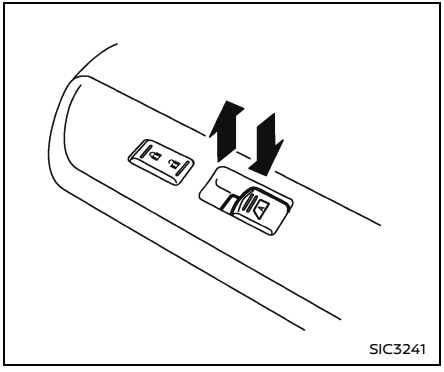

Passenger side power window switch

The passenger side switch will open or close only the corresponding window. To open or close the window, push down or pull up the switch and hold it.

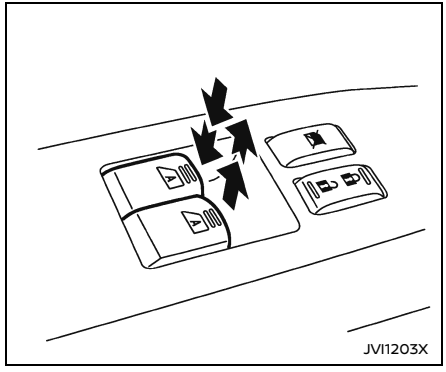

Automatic operation

To fully open or close the window, completely push down or pull up the switch and release it; it need not be held. The window will automatically open or close all the way. To stop the window, just push or lift the switch in the opposite direction.

A light push or pull on the switch will cause the window to open or close until the switch is released.

Auto reverse function

⚠ WARNING

There are some small distances immediately before the closed position which cannot be detected. Make sure that all passengers have their hands, etc., inside the vehicle before closing the window.

If the control unit detects something caught in the window as it is closing, the window will be immediately lowered.

The auto reverse function can be activated when the window is closed by automatic operation when the ignition switch is in the ON position or for 45 seconds after the ignition switch is pushed to the OFF position.

Depending on the environment or driving conditions, the auto reverse function may be activated if an impact or load similar to something being caught in the window occurs.

Automatic adjusting function

⚠ CAUTION

When the battery cable is removed from the battery terminal, do not close either of the front doors. The automatic window adjusting function will not work and the side roof panel may be damaged.

The power window has an automatic adjusting function. When the door is being opened, the window is automatically lowered slightly to avoid contact between the window and the side roof panel. When the door is closed, the window is automatically raised slightly.

While the automatic adjusting function does not work, the window will be controlled as follows:

- When the door is opened, the window lowers for approximately 0.15 seconds.
- While the door is open, the window cannot be raised.

If the windows do not close automatically

If the power window automatic function (closing only) does not operate properly, perform the following procedure to initialize the power window system.

1. Push the ignition switch to start the engine.
2. Close the door.
3. After starting the engine, open the window completely by operating the power window switch.
4. Pull the power window switch and hold it to close the window, and then hold the switch more than 3 seconds after the window is closed completely.
5. Release the power window switch. Operate the window by the automatic function to confirm the initialization is complete.
6. Perform steps 2 through 5 above for other windows.

If the power window automatic function does not operate properly after performing the procedure above, have your vehicle checked. It is recommended you visit a NISSAN dealer for this service.

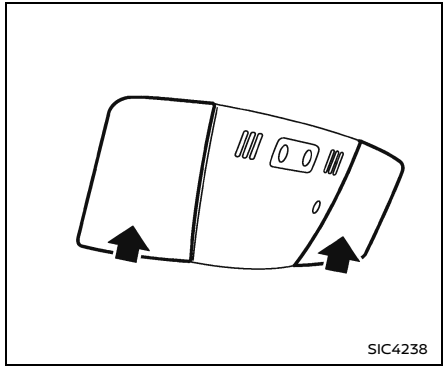

MAP LIGHTS

Push the button as illustrated to turn the light on or off.

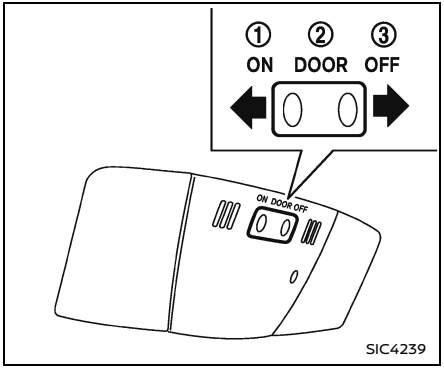

INTERIOR LIGHT CONTROL SWITCH

The interior light control switch has three positions: ON, DOOR and OFF.

ON position

When the switch is in the ON position ① the map lights will illuminate.

DOOR position

When the switch is in the DOOR position ②, the map lights will illuminate under the following conditions:

- ignition switch is switched to the OFF or LOCK position
  - remain on for about 15 seconds.
- doors are unlocked by pushing the UNLOCK button on the Intelligent Key or door handle request switch with the ignition switch in the LOCK position
  - remain on for about 15 seconds.
- any door is opened and then closed with the ignition switch in the LOCK position
  - remain on for about 15 seconds.
- any door is opened with the ignition switch in the ACC or ON position
  - remain on while the door is opened. When the door is closed, the lights go off.

The lights will also turn off after a period of time when the lights remain illuminated after the ignition switch has been pushed to the OFF or LOCK position to prevent the battery from becoming discharged.

When the "Auto Room Lamp" is set to the OFF position (see "Vehicle Settings" (P.90).), the lights will illuminate under the following condition:

- any door is opened with the ignition switch in any position
  - remain on while the door is opened. When the door is closed, the lights go off.

OFF position

When the switch is in the OFF position ③, the lights will not illuminate, regardless of the condition.

⚠ CAUTION

Do not use for extended periods of time with the engine stopped. This could result in a discharged battery.

VANITY MIRROR LIGHTS

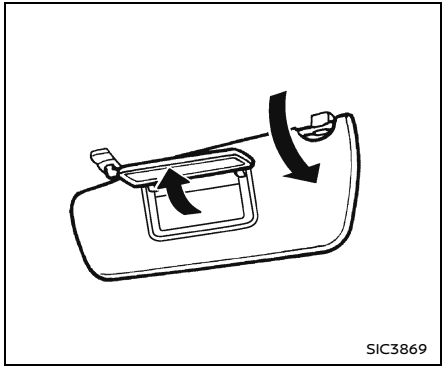

The light on the vanity mirror will turn on when the cover on the vanity mirror is opened.

When the cover is closed, the light will turn off.

The lights will also turn off after a period of time when the lights remain illuminated to prevent the battery from becoming discharged.

CARGO LIGHT

The light illuminates when the rear hatch is opened. When the rear hatch is closed, the light will turn off.

The light will also turn off after a period of time when the light remains illuminated after the ignition switch has been pushed to the OFF or LOCK position to prevent the battery from becoming discharged.

HomeLink® UNIVERSAL TRANSCEIVER (if so equipped)

BASIC INFORMATION

The HomeLink® Universal Transceiver provides a convenient way to consolidate the functions of up to three individual hand-held transmitters into one built-in device.

HomeLink® Universal Transceiver:

- Will operate most Radio Frequency (RF) devices such as garage doors, gates, home and office lighting, entry door locks and security systems.
- Is powered by your vehicle's battery. No separate batteries are required. If the vehicle's battery is discharged or is disconnected, HomeLink® will retain all programming.

When the HomeLink® Universal Transceiver is programmed, retain the original transmitter for future programming procedures (Example: new vehicle purchases). Upon sale of the vehicle, the programmed HomeLink® Universal Transceiver buttons should be erased for security purposes. For additional information, see "Programming HomeLink®" (P.137).

⚠ WARNING

- **Do not use the HomeLink® Universal Transceiver with any garage door opener that lacks safety stop and reverse features as required by federal safety standards. (These standards became effective for opener models manufactured after April 1, 1982.) A garage door opener which cannot detect an object in the path of a closing garage door and then automatically stop and reverse, does not meet current federal safety standards. Using a garage door opener without these features increases the risk of serious injury or death.**
- **During the programming procedure your garage door or security gate will open and close (if the transmitter is within range). Make sure that people or objects are clear of the garage door, gate, etc., that you are programming.**
- **Your vehicle's engine should be turned off while programming the HomeLink® Universal Transceiver. Do not breathe exhaust gases; they contain colorless and odorless carbon monoxide. Carbon monoxide is dangerous. It can cause unconsciousness or death.**

PROGRAMMING HomeLink®

The following steps show generic instructions on how to program a Homelink® button. If you have any questions or are having difficulty programming your HomeLink® buttons, refer to the HomeLink® web site at: www.homelink.com/nissan or call 1-800-355-3515.

NOTE:
It is also recommended that a new battery be placed in the hand-held transmitter of the device being programmed to Homelink® for quicker programming and accurate transmission of the radio-frequency.

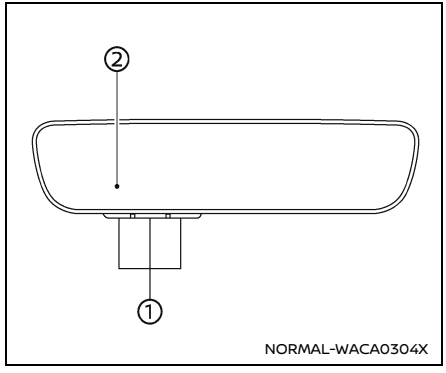

① Homelink® buttons (1–3)
② Indicator light (appears above each Homelink® button)

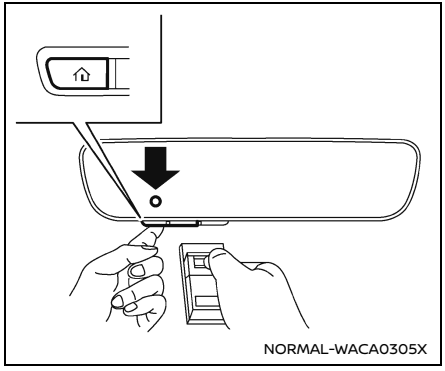

1. Position the end of your hand-held transmitter 1-3 inches (2-8 cm) away from the HomeLink® button that you would wish to program while keeping the indicator light in view.
2. Simultaneously press and hold both the chosen HomeLink® and hand-held transmitter buttons until the HomeLink® indicator light changes from a slow to a rapidly blinking light. Now you may release both the HomeLink® and hand-held transmitter buttons.

NOTE:

Some hand-held transmitter (garage door opener remote) may actually train better a distance of 6–12 inches (15–20 cm). Keep this in mind if you have difficulty with the programming process.

3. Firmly **press, hold for five seconds and release** the programmed Homelink® button up to two separate times to activate the door. If the door does not activate, press and hold the just trained Homelink® button and observe the indicator light.
   - If the indicator light **stays on constantly, programming is complete** and your device should activate when the Homelink® button is pressed and released.
   - If the indicator light blinks **rapidly for two seconds and then turns to a constant light, continue with "Programming" steps 4–6** to complete the programming of a rolling code equipped device (most commonly a garage door opener).

NOTE:

Some devices may require you to replace this Programming Step 2 with procedures noted in the "Programming HomeLink® for Canadian customers and gate openers" (P.139) section. If the Homelink® indicator light does not change to a rapidly blinking light after performing these steps, contact Homelink® at www.homelink.com.

4. At the garage door opener motor (security gate motor, etc.), locate the "Learn" or "Set" button. This can usually be found where the hanging antenna wire is attached to the motor-head unit (see the device's manual to identify this button.). The name and color of the button may vary by manufacturer.

NOTE:

A ladder and/or second person may simplify the following steps. Do not stand on your vehicle to perform the next steps.

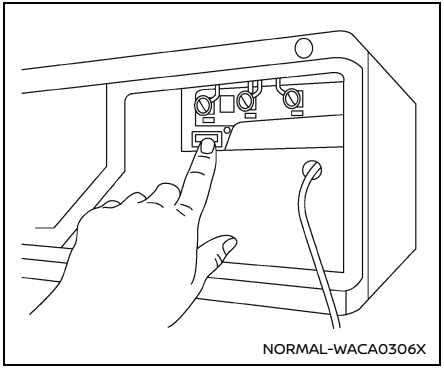

Example

5. Firmly press and release the “Learn” or “Set” button until the indicator illuminates. Once the button is pressed, you have approximately 30 seconds to initiate the next step.
6. Return to the vehicle and firmly press, hold for two seconds and release the HomeLink® button up to three times. **Do not press the HomeLink® button rapidly.** At this point programming is complete and your device should operate when the HomeLink® button is pressed and released.
7. If you have any questions or are having difficulty programming your HomeLink® buttons, refer to the HomeLink® web site at: www.homelink.com/nissan or call 1-800-355-3515.

PROGRAMMING HomeLink® FOR CANADIAN CUSTOMERS AND GATE OPENERS

Canadian radio-frequency laws require transmitter signals to “time-out” (or quit) after several seconds of transmission – which may not be long enough for HomeLink® to pick up the signal during training. Similar to this Canadian law, some U.S. gate operators are designed to “time-out” in the same manner.

If you live in Canada or you are having difficulties training a gate operator **or** garage door opener by using the “Programming HomeLink®” procedures, **replace** “Programming HomeLink®” **step 2** with the following:

NOTE:
When programming a garage door opener, etc., unplug the device during the “cycling” process to prevent possible damage to the device components.

Step 2: Continue to press and hold the HomeLink® button while you press and release – every two seconds (“cycle”) your hand-held transmitter until the HomeLink® indicator light changes from a slow to a rapidly blinking light. Now you may release both the Homelink® and hand-held transmitter buttons.

Proceed with “Programming HomeLink®” step 3 to complete.

Remember to plug the device back in when programming is completed.

OPERATING THE HomeLink® UNIVERSAL TRANSCEIVER

The HomeLink® Universal Transceiver, after it is programmed, can be used to activate the programmed device. To operate, firmly press the appropriate programmed HomeLink® button. The indicator light will illuminate in green with three parenthesis "((( )))" on the mirror while the signal is being transmitted.

For convenience, the hand-held transmitter of the device may also be used at any time.

PROGRAMMING TROUBLE-SHOOTING

If the HomeLink® does not quickly learn the hand-held transmitter information:

- Replace the hand-held transmitter batteries with new batteries.
- Position the hand-held transmitter with its battery area facing away from the HomeLink® button.

- Press and hold both the HomeLink® button and hand-held transmitter button in each step without interruption.
- Position the hand-held transmitter 1 to 3 in (2 to 8 cm) away from the HomeLink® button. Hold the transmitter in that position for up to 15 seconds. If HomeLink® is not programmed within that time, try holding the transmitter in another position – for example, 6 to 12 in (15 to 20 cm) away, keeping the HomeLink® button in view at all times.

It is recommended not to place metal objects near the garage door opener antenna for optimal functionality.

If you have any questions or are having difficulty programming your HomeLink® buttons, refer to the HomeLink® web site at: www.homelink.com/nissan or call 1-800-355-3515.

CLEARING THE PROGRAMMED INFORMATION

Basic information

The following procedure clears the programmed information from three buttons. Individual buttons cannot be cleared. However, individual buttons can be reprogrammed. For additional information, see "Reprogramming a single HomeLink® button" (P.140).

To clear all programming

1. Press and hold the two outer HomeLink® buttons until the indicator light begins to flash in green, in approximately 10 seconds. Do not hold for longer than 20 seconds.
2. Release both buttons.

HomeLink® is now in the programming mode and can be programmed at any time beginning with "Programming HomeLink®" -Step 1.

REPROGRAMMING A SINGLE HomeLink® BUTTON

To reprogram a HomeLink® button, complete the following:

1. Press and hold the desired HomeLink® button. **DO NOT** release the button.
2. The indicator light will begin to flash after 20 seconds. Without releasing the HomeLink® button, proceed with "Programming HomeLink®" — step 1.

For questions or comments, contact HomeLink® at: www.homelink.com/nissan or 1–800–355–3515.

The HomeLink® button has now been reprogrammed. The new device can be activated by pressing the HomeLink® button that was just programmed. This procedure will not affect any other programmed HomeLink® buttons.

If a new device is not programmed to the HomeLink® button, it will revert to the previously stored programming.

IF YOUR VEHICLE IS STOLEN

If your vehicle is stolen, you should change the codes of any non-rolling code device that has been programmed into HomeLink®. Consult the Owner's Manual of each device or call the manufacturer or dealer of those devices for additional information.

When your vehicle is recovered, you will need to reprogram the HomeLink® Universal Transceiver with your new transmitter information.

FCC Notice:

For USA:

This device complies with Part 15 of the FCC Rules. Operation is subject to the following two conditions: (1) This device may not cause harmful interference, and (2) this device must accept any interference received, including interference that may cause undesired operation.

NOTE:
Changes or modifications not expressly approved by the party responsible for compliance could void the user's authority to operate the equipment.

For Canada:

This device contains licence-exempt transmitter(s)/receiver(s) that comply with Innovation, Science and Economic Development Canada's licence-exempt RSS(s). Operation is subject to the following two conditions: (1) This device may not cause interference. (2) This device must accept any interference, including interference that may cause undesired operation of the device.

MEMO

3 Pre-driving checks and adjustments

Keys 144
- Basic information 144
- Intelligent Key 144
- Valet hand-off 145

Doors 146
- Basic information 146
- Locking with mechanical key 146
- Locking with inside lock knob 146
- Locking with power door lock switch 147
- Automatic door locks 147

Intelligent Key system 148
- Basic information 148
- Intelligent Key operating range 149
- Door locks/unlocks precaution 150
- Intelligent Key operation 151
- Battery saver system 152
- Warning signals 152
- Troubleshooting guide 153

Remote keyless entry system 153
- Basic information 153
- How to use remote keyless entry system 154

Hood 157

Rear hatch 157
- Basic information 157
- Rear hatch opener switch 158
- Rear hatch release switch 159
- Secondary rear hatch release 159

Front, side and rear unique parts (NISMO models) 160

Fuel-filler door 161
- Opening the fuel-filler door 161
- Fuel-filler cap 161

STEERING WHEEL 164
- Basic information 164
- Manual operation 164

Sun visors 164

Mirrors 165
- Inside mirror 165
- Outside mirrors 166
- Vanity mirror 167

BASIC INFORMATION

A key number plate is supplied with your keys. Record the key number and keep it in a safe place (such as your wallet), not in the vehicle. If you lose your keys, it is recommended you visit a NISSAN dealer for duplicates by using the key number. NISSAN does not record any key numbers so it is very important to keep track of your key number plate.

A key number is only necessary when you have lost all keys and do not have one to duplicate from. If you still have a key, it can be duplicated without knowing the key number.

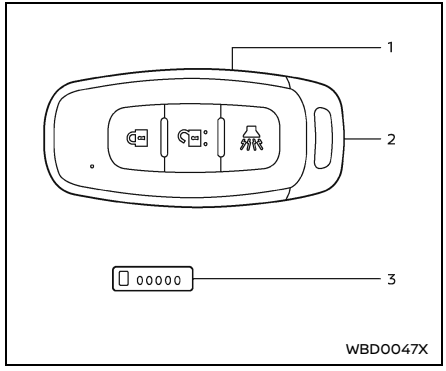

1. Intelligent Keys (2)
2. Mechanical keys (inside the Keys) (2)
3. Key number plate

INTELLIGENT KEY

Basic information

Your vehicle can only be driven with the Intelligent Keys which are registered to your vehicle's Intelligent Key system components and NISSAN Vehicle Immobilizer System components. As many as 4 Intelligent Keys can be registered and used with one vehicle. The new keys must be registered by a NISSAN dealer prior to use with the Intelligent Key system and NISSAN Vehicle Immobilizer System of your vehicle. Since the registration process requires erasing all memory in the Intelligent Key components when registering new keys, be sure to take all Intelligent Keys that you have to the NISSAN dealer.

It is possible that the Intelligent Key functions become canceled. Contact a NISSAN dealer.

⚠ CAUTION

- **Be sure to carry the Intelligent Key with you when driving. The Intelligent Key is a precision device with a built-in transmitter. To avoid damaging it, please note the following.**
  - **The Intelligent Key is water resistant; however, wetting may damage the Intelligent Key. If the Intelligent Key gets wet, immediately wipe until it is completely dry.**
  - **Do not bend, drop or strike it against another object.**
  - **If the outside temperature is below 14°F (-10°C) degrees, the battery of the Intelligent Key may not function properly.**

- **– Do not place the Intelligent Key for an extended period in a place where temperatures exceed 140°F (60°C).**
- **– Do not change or modify the Intelligent Key.**
- **– Do not use a magnet key holder.**
- **– Do not place the Intelligent Key near an electric appliance such as a television set, personal computer or cellular phone.**
- **– Do not allow the Intelligent Key to come into contact with water or salt water, and do not wash it in a washing machine. This could affect the system function.**

- **If an Intelligent Key is lost or stolen, NISSAN recommends erasing the ID code of that Intelligent Key. This will prevent the Intelligent Key from unauthorized use to unlock the vehicle. For information regarding the erasing procedure, it is recommended you visit a NISSAN dealer.**

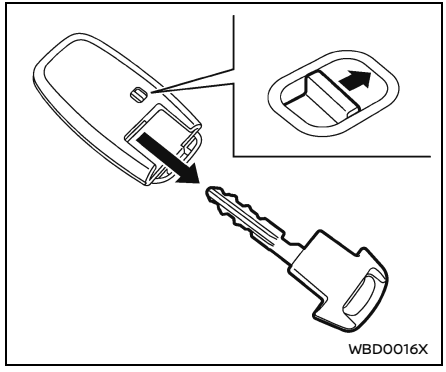

Mechanical key

To remove the mechanical key, release the lock knob at the back of the Intelligent Key.

To install the mechanical key, firmly insert it into the Intelligent Key until the lock knob returns to the lock position.

Use the mechanical key to lock or unlock the driver's door and the glove box.

See "Doors" (P.146) and "Storage" (P.128).

⚠ CAUTION

Always carry the mechanical key installed in the Key.

VALET HAND-OFF

When you have to leave a key with a valet, give them the Intelligent Key itself and keep the mechanical key with you to protect your belongings.

To prevent the glove box from being opened during valet hand-off, follow the procedures below.

1. Remove the mechanical key from the Intelligent Key.
2. Lock the glove box with the mechanical key.
3. Hand the Intelligent Key to the valet, keeping the mechanical key in your pocket or bag for insertion into the Intelligent Key when you retrieve your vehicle.

See "Storage" (P.128).

BASIC INFORMATION

⚠ WARNING

- **Always have the doors locked while driving. Along with the use of seat belts, this provides greater safety in the event of an accident by helping to prevent persons from being thrown from the vehicle. This also helps keep children and others from unintentionally opening the doors, and will help keep out intruders.**
- **Before opening any door, always look for and avoid oncoming traffic.**
- **To help avoid risk of injury or death through unintended operation of the vehicle and or its systems, including entrapment in windows or inadvertent door lock activation, do not leave children, people who require the assistance of others or pets unattended in your vehicle. Additionally, the temperature inside a closed vehicle on a warm day can quickly become high enough to cause a significant risk of injury or death to people and pets.**

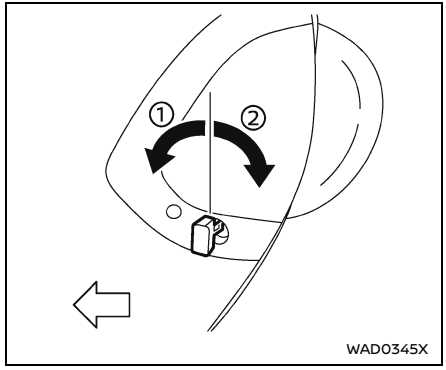

LOCKING WITH MECHANICAL KEY

To lock the driver's door, insert the mechanical key to the door key cylinder and turn the key to the front of the vehicle ①.

To unlock the driver's door, turn the mechanical key to the rear of the vehicle ②.

To lock or unlock the other door, use the power door lock switch, the LOCK or UNLOCK button on the Intelligent Key or any door request switch.

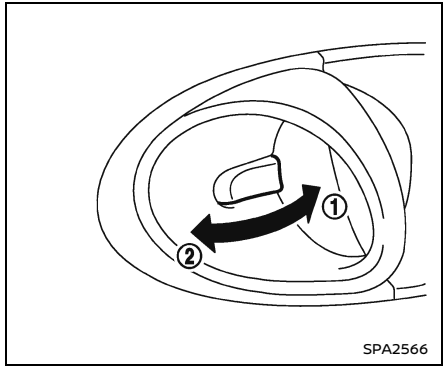

LOCKING WITH INSIDE LOCK KNOB

To lock the door individually, move the inside lock knob to the lock position ① then close the door.

To unlock, move the inside lock knob to the unlock position ②.

When locking the door without an Intelligent Key, be sure not to leave the Intelligent Key inside the vehicle.

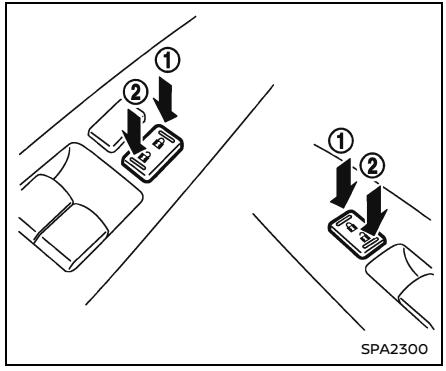

LOCKING WITH POWER DOOR LOCK SWITCH

Basic information

Operating the power door lock switch will lock or unlock all the doors. The switches are located on the driver's and front passenger's door armrests.

To lock the doors, push the power door lock switch to the lock position ① with the driver's or front passenger's door open, then close the door.

When locking the door this way, be certain not to leave the Intelligent Key inside the vehicle.

To unlock the doors and the fuel-filler door, push the power door lock switch to the unlock position ②.

Lockout protection

When the power door lock switch is moved to the lock position and any door open, all doors will lock and unlock automatically. With the Intelligent Key left in the vehicle and any door open, all doors will unlock automatically and a chime will sound after the door is closed.

These functions help to prevent the Intelligent Key from being accidentally locked inside the vehicle.

AUTOMATIC DOOR LOCKS

- All doors lock automatically when the vehicle speed reaches 15 MPH (24 km/h).
- All doors unlock automatically when the ignition switch is placed in the OFF position or when the shift position is placed in the P (Park) position, if selected (Automatic Transmission models).

The automatic unlock function can be deactivated or activated. To deactivate or activate the automatic door unlock system, perform the following procedure:

1. Close all doors.
2. Place the ignition switch in the ON position.
3. Within 20 seconds of performing Step 2, push and hold the power door lock switch to the position (UNLOCK) for more than 5 seconds.
4. When activated, the hazard indicator will flash twice. When deactivated, the hazard indicator will flash once.
5. The ignition switch must be placed in the OFF and ON position again between each setting change.

When the automatic door unlock system is deactivated, the doors do not unlock when the ignition switch is placed in the OFF position. To unlock the door manually, use the inside lock knob or the power door lock switch (driver's or front passenger's side).

BASIC INFORMATION

⚠ WARNING

- **Radio waves could adversely affect electric medical equipment. Those who use a pacemaker should contact the electric medical equipment manufacturer for the possible influences before use.**
- **The Intelligent Key transmits radio waves when the buttons are pushed. The FAA advises that the radio waves may affect aircraft navigation and communication systems. Do not operate the Intelligent Key while on an airplane. Make sure the buttons are not operated unintentionally when the unit is stored during a flight.**

The Intelligent Key system can operate all the door and rear hatch locks using the remote controller function or pushing the request switch on the vehicle without taking the key out from a pocket or purse. The operating environment and/or conditions may affect the Intelligent Key system operation.

Be sure to read the following before using the Intelligent Key system.

⚠ CAUTION

- **Be sure to carry the Intelligent Key with you when operating the vehicle.**
- **Never leave the Intelligent Key in the vehicle when you leave the vehicle.**

The Intelligent Key is always communicating with the vehicle as it receives radio waves. The Intelligent Key system transmits weak radio waves. Environmental conditions may interfere with the operation of the Intelligent Key system under the following operating conditions.

- When operating near a location where strong radio waves/noises are transmitted, such as a TV tower, power station and broadcasting station.
- When in possession of wireless equipment, such as a cellular telephone, transceiver, and CB radio.
- When the Intelligent Key is in contact with or covered by metallic materials.
- When any type of radio wave remote control is used nearby.
- When the Intelligent Key is placed near an electric appliance such as a personal computer.
- When the vehicle is parked near a parking meter.

In such cases, correct the operating conditions before using the Intelligent Key function or use the mechanical key.

Although the life of the battery varies depending on the operating conditions, the battery's life is approximately 2 years. If the battery is discharged, replace it with a new one.

When the Intelligent Key battery is almost discharged, see "Intelligent Key battery discharge" (P.200) to start the engine.

Since the Intelligent Key is continuously receiving radio waves, if the key is left near equipment which transmits strong radio waves/noises, such as signals from a TV and personal computer, the battery life may become shorter.

For information regarding replacement of a battery, see "Intelligent Key battery replacement" (P.348).

As many as 4 Intelligent Keys can be registered and used with one vehicle. For information about the purchase and use of additional Intelligent Keys, contact a NISSAN dealer.

⚠ CAUTION

- **Do not allow the Intelligent Key, which contains electrical components, to come into contact with water or salt water. This could affect the system function.**
- **Do not drop the Intelligent Key.**
- **Do not strike the Intelligent Key sharply against another object.**
- **Do not change or modify the Intelligent Key.**
- **Wetting may damage the Intelligent Key. If the Intelligent Key gets wet, immediately wipe until it is completely dry.**
- **If the outside temperature is below 14°F (–10°C), the battery of the Intelligent Key may not function properly.**
- **Do not place the Intelligent Key for an extended period in an area where temperatures exceed 140°F (60°C).**
- **Do not attach the Intelligent Key with a key holder that contains a magnet.**
- **Do not place the Intelligent Key near equipment that produces a magnetic field, such as a TV, audio equipment, personal computer or cellular phone.**

If an Intelligent Key is lost or stolen, NISSAN recommends erasing the ID code of that Intelligent Key from the vehicle. This may prevent the unauthorized use of the Intelligent Key to operate the vehicle. For information regarding the erasing procedure, contact a NISSAN dealer.

The Intelligent Key function can be disabled. For information about disabling the Intelligent Key function, contact a NISSAN dealer.

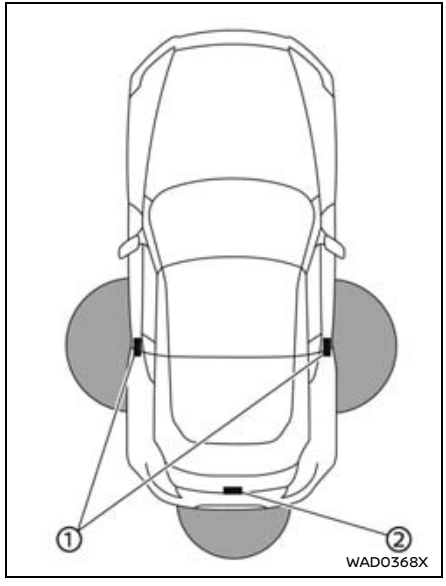

INTELLIGENT KEY OPERATING RANGE

The Intelligent Key functions can only be used when the Intelligent Key is within the specified operating range from the request switch ① and the rear hatch opener switch ②.

When the Intelligent Key battery is discharged or strong radio waves/noises are present near the operating location, the Intelligent Key system's operating range becomes narrower, and the Intelligent Key may not function properly.

The operating range is within 31.50 in (80 cm) from each request switch ① and the rear hatch opener switch ②.

If the Intelligent Key is too close to the door glass, handle or rear bumper the request and rear hatch opener switches may not function.

When the Intelligent Key is within the operating range, it is possible for anyone who does not carry the Intelligent Key to push the request switch ① to lock/unlock the doors and the rear hatch. It is also possible to push the rear hatch opener switch ② to open the rear hatch.

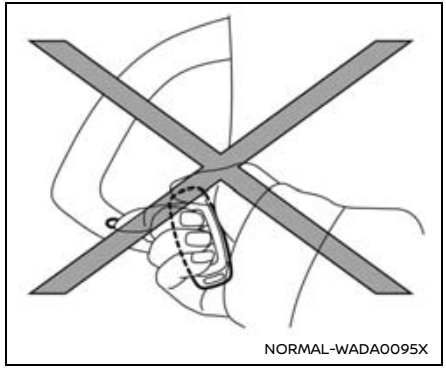
NORMAL-WADA0095X

DOOR LOCKS/UNLOCKS PRECAUTION

- Do not push the door handle request switch with the Intelligent Key held in your hand as illustrated. The close distance to the door handle will cause the Intelligent Key system to have difficulty recognizing that the Intelligent Key is outside the vehicle.
- After locking with the door handle request switch, verify the doors are securely locked by testing them.
- To prevent the Intelligent Key from being left inside the vehicle, make sure you carry the key with you and then lock the doors.
- Do not pull the door handle before pushing the door handle request switch. The door will be unlocked but will not open. Release the door handle once and pull it again to open the door.

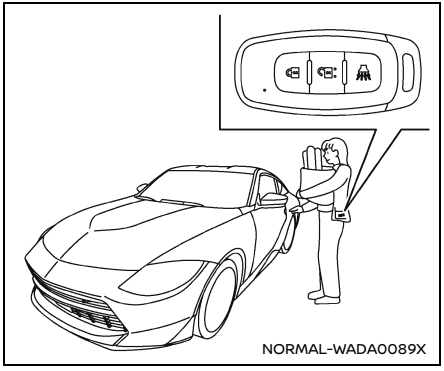
NORMAL-WADA0089X

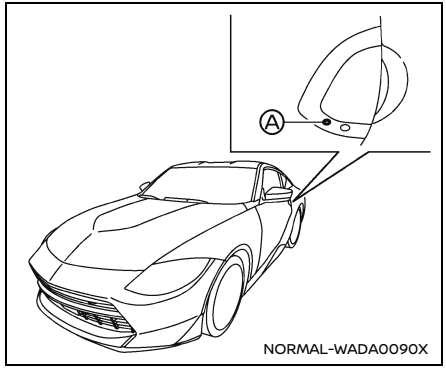

NORMAL-WADA0090X

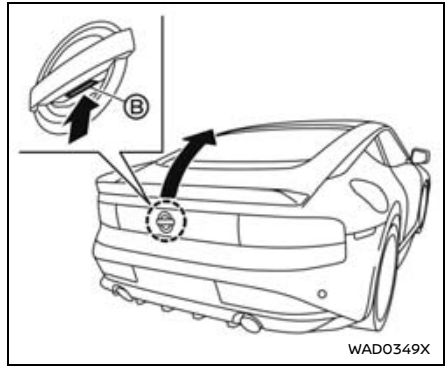

WAD0349X

INTELLIGENT KEY OPERATION

You can lock or unlock the doors without taking the key out from your pocket or bag.

When you carry the Intelligent Key with you, you can lock or unlock all doors and the rear hatch by pushing the door handle request switch (driver's or front passenger's) Ⓐ within the range of operation.

When you lock or unlock the doors and the rear hatch, the hazard indicator will flash and the horn (or the outside chime) will sound as a confirmation. For details, see "Setting hazard indicator and horn mode" (P.156).

Welcome light and farewell light function

When you lock or unlock the doors and fuel-filler door, front and rear side marker lights, parking lights, tail lights and the

license plate light will illuminate for a period of time. The welcome light and farewell light function can be disabled. For information about disabling the welcome light and farewell light function, see "Vehicle Settings" (P.90).

Locking doors, rear hatch and fuel-filler door

1. Push the ignition switch to the OFF position and make sure you carry the Intelligent Key with you.*1
2. Close all the doors and the rear hatch.*2
3. Push the door handle request switch (driver's or front passenger's) while carrying the Intelligent Key with you.*3
4. All the doors, rear hatch and fuel-filler door will lock.
5. The hazard indicator flashes twice and the outside chime sounds twice.

*1: Doors and the rear hatch will lock with the Intelligent Key while the ignition switch is in the ACC or ON position.

*2: Doors and the rear hatch will not lock with the Intelligent Key while any door or the rear hatch is open.

*3: Doors and the rear hatch will not lock by pushing the door handle request switch with the Intelligent Key inside the vehicle. However, when an Intelligent Key is inside the vehicle, doors and the rear hatch can be locked with another registered Intelligent Key.

Unlocking doors and fuel-filler door

1. Push the door handle request switch (driver's or front passenger's) once while carrying the Intelligent Key with you.
2. The hazard indicator flashes once and outside chime sounds once. The corresponding door will unlock. (The fuel-filler lid will be unlocked when the driver's door handle request switch is pushed.)
3. Push the door handle request switch again within 60 seconds.
4. The hazard indicator flashes once and outside chime sounds once again. All the doors and the rear hatch will unlock.

All doors, the rear hatch and the fuel-filler door will be locked automatically unless one of the following operations is performed within 1 minute after pushing the request switch while the doors are locked.

- Opening any door and/or the rear hatch
- Pushing the ignition switch

During this 1-minute time period, if the UNLOCK button on the Intelligent Key is pushed, all doors will be locked automatically after another 1 minute.

Opening rear hatch

To open only the rear hatch, perform the following procedure.

1. Carry the Intelligent Key.
2. Push the rear hatch opener switch Ⓑ.
3. The rear hatch will open.

BATTERY SAVER SYSTEM

When all the following conditions are met for a period of time, the battery saver system will cut off the power supply to prevent battery discharge.

- The ignition switch is in the ACC position, and
- All doors are closed, and
- The shift position is in the P (Park) position (Automatic Transmission models).

WARNING SIGNALS

To help prevent the vehicle from moving unexpectedly by erroneous operation of the Intelligent Key listed on the following chart or to help prevent the vehicle from being stolen, chime or beep sounds inside and outside the vehicle and a warning displays in the vehicle information display.

When a chime or beep sounds or the warning displays, be sure to check the vehicle and Intelligent Key.

See "Troubleshooting guide" (P.153) and

"Vehicle information display (except sports mode display)" (P.87).

TROUBLESHOOTING GUIDE

Symptom: When opening the driver's door to get out of the vehicle > The inside warning chime sounds continuously.
• Possible cause: The ignition switch is in the ACC position.
• Remedy: Push the ignition switch to the OFF position.

Symptom: When closing the door after getting out of the vehicle > The NO KEY warning appears on the display, the outside chime sounds 3 times and the inside warning chime sounds for approximately a few seconds.
• Possible cause: The ignition switch is in the ACC or ON position.
• Remedy: Push the ignition switch to the OFF position.

Symptom: When closing the door after getting out of the vehicle > The SHIFT P warning appears on the display and the outside chime sounds continuously (Automatic Transmission models).
• Possible cause: The ignition switch is in the ACC or OFF position and the shift position is not in the P (Park) position.
• Remedy: Push the park button to engage the P (Park) position and push the ignition switch to the OFF position.

Symptom: When closing the door with the inside lock knob turned to LOCK > The outside chime sounds for a few seconds and all the doors unlock.
• Possible cause: The Intelligent Key is inside the vehicle and cargo room area.
• Remedy: Carry the Intelligent Key with you.

Symptom: When pushing the door handle request switch to lock the door > The outside chime sounds for a few seconds.
• Possible cause: The Intelligent Key is inside the vehicle and cargo room area.
• Remedy: Carry the Intelligent Key with you.

Symptom: When pushing the door handle request switch to lock the door > The outside chime sounds for a few seconds.
• Possible cause: A door is not closed securely.
• Remedy: Close the door securely.

Symptom: When the shift position is in the P (Park) position (Automatic Transmission models) > The inside warning chime sounds continuously.
• Possible cause: The ignition switch is in the ON position.
• Remedy: The ignition switch is in the OFF position.

BASIC INFORMATION

⚠ WARNING

The Intelligent Key transmits radio waves when the buttons are pushed. The FAA advises that the radio waves may affect aircraft navigation and communication systems. Do not operate the Intelligent Key while on an airplane. Make sure the buttons are not operated unintentionally when the unit is stored during a flight.

It is possible to lock/unlock all doors, fuel-filler door, activate the panic alarm and open the windows by pushing the buttons on the Intelligent Key from outside the vehicle.

Before locking the doors, make sure the Intelligent Key is not left in the vehicle.

The LOCK/UNLOCK button on the Intelligent Key can operate at a distance of approximately 33 ft (10 m) from the vehicle. (The effective distance depends upon the conditions around the vehicle.)

As many as 4 Intelligent Keys can be used with one vehicle. For information concerning the purchase and use of additional Intelligent Keys, contact a NISSAN dealer.

The lock and unlock buttons on the Intel-

ligent Key will not operate when:

- the distance between the Intelligent Key and the vehicle is over 33 ft (10 m).
- the Intelligent Key battery is discharged.

After locking with the remote keyless entry function, pull the door handle to make sure the doors are securely locked.

The LOCK/UNLOCK operating range varies depending on the environment. To securely operate the lock and unlock buttons, approach the vehicle to about 3 ft (1 m) from the door.

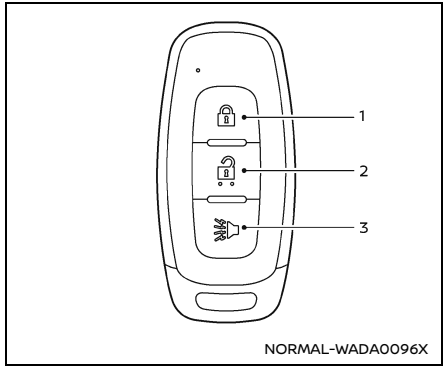

1. LOCK button
2. UNLOCK button
3. PANIC button

HOW TO USE REMOTE KEYLESS ENTRY SYSTEM

Basic information

When you lock or unlock the doors and rear hatch, the hazard indicator will flash and the horn (or the outside chime) will sound as a confirmation. For details, see "Setting hazard indicator and horn mode" (P.156).

Locking doors, rear hatch and fuel-filler door

1. Push the ignition switch to the OFF position and make sure you carry the Intelligent Key with you.*
2. Close all the doors and the rear hatch.
3. Push the LOCK button on the Intelligent Key.
4. All the doors, the rear hatch and fuel-filler door will lock.
5. The hazard indicator flashes twice and the horn chirps once.

*: Doors and the rear hatch will lock with the Intelligent Key while the ignition switch is in the ACC or ON position.

Unlocking doors, rear hatch and fuel-filler door

1. Push the UNLOCK button on the Intelligent Key once.
2. The hazard indicator flashes once. The driver's door and fuel-filler door will unlock.
3. Push the UNLOCK button on the Intelligent Key again within 60 seconds.
4. The hazard indicator flashes once again. All the doors and the rear hatch will unlock.

All doors and the rear hatch will be locked automatically unless one of the following operations is performed within 1 minute after pushing the UNLOCK button on the Intelligent Key while the doors are locked. If during this 1-minute time period, the UNLOCK button on the Intelligent Key is pushed, all doors and the rear hatch will be locked automatically after another 1 minute.

- Opening any door
- Pushing the ignition switch

Opening window(s) (if so equipped)

The Intelligent Key allows you to simultaneously open the window(s) equipped with automatic operation. All doors must be closed and the key must be outside the vehicle.

To open the window(s) equipped with automatic operation, push and hold the button on the Intelligent Key **for longer than 3 seconds** after all doors are unlocked.

The door window(s) equipped with automatic operation will open while pushing the button on the Intelligent Key.

To interrupt opening of the window(s) equipped with automatic operation, release the button.

- The Intelligent Key cannot close any window.
- All doors will be unlocked by the operation.

Using panic alarm

If you are near your vehicle and feel threatened, you may activate the alarm to call attention as follows:

1. Push the PANIC button on the Intelligent Key for **more than 1 second.**
2. The theft warning alarm and headlights will stay on for 25 seconds.
3. The panic alarm stops when:
   - It has run for 25 seconds, or
   - Any of the buttons on the Intelligent Key are pushed. (Note: PANIC button should be pushed for more than 1 second.)

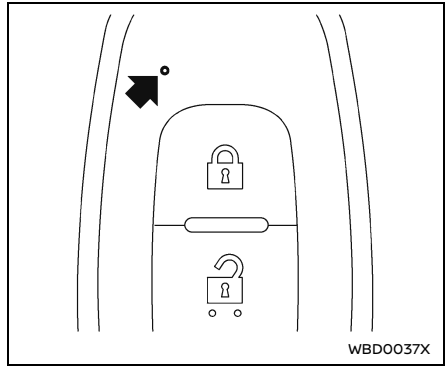

Intelligent Key button operation light

The light blinks only when you push any button on the Intelligent Key. The light illumination only signifies that the Intelligent Key has transmitted a signal. You may look and/or listen to verify that the vehicle has performed the intended operation. If the light does not blink, your battery may be too weak to communicate to the vehicle. If this occurs, the battery may need to be replaced.

For additional information regarding the replacement of a battery, see "Intelligent Key battery replacement" (P.348).

Setting hazard indicator and horn mode

This vehicle is set in hazard indicator and horn mode when you first receive the vehicle.

In hazard indicator and horn mode, when the LOCK button is pushed, the hazard indicator flashes twice and the horn chirps once. When the UNLOCK button is pushed, the hazard indicator flashes once.

If horns are not necessary, the system can be switched to the hazard indicator mode.

In hazard indicator mode, when the LOCK button is pushed, the hazard indicator flashes twice. When the UNLOCK button is pushed, neither the hazard indicator nor the horn operates.

Hazard indicator and horn mode:

	DOOR LOCK	DOOR UNLOCK
Intelligent Key system (Using door handle request switch)	HAZARD - **twice** OUTSIDE CHIME - **twice**	HAZARD - **once** OUTSIDE CHIME - **once**
Remote keyless entry system (Using or button)	HAZARD - **twice** HORN - **once**	HAZARD - **once** HORN - none

Hazard indicator mode:

	DOOR LOCK	DOOR UNLOCK
Intelligent Key system (Using door handle request switch)	HAZARD - **twice** OUTSIDE CHIME - none	HAZARD - none OUTSIDE CHIME - none
Remote keyless entry system (Using or button)	HAZARD - **twice** HORN - none	HAZARD - none HORN - none

Switching procedure:

To switch the hazard indicator and horn (chime) operation, push the LOCK and UNLOCK buttons on the Intelligent Key simultaneously for more than 2 seconds.

- When the hazard indicator mode is set, the hazard indicator flashes 3 times.
- When the hazard indicator and horn mode is set, the hazard indicator flashes once and the horn chirps once.

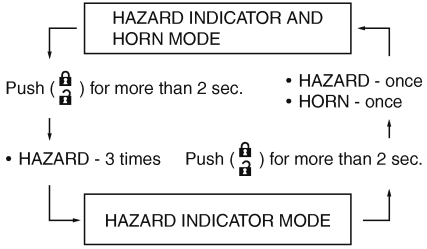

HOOD

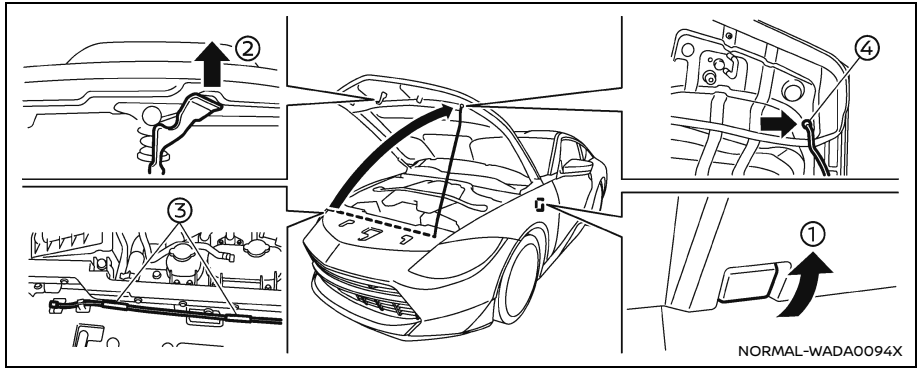

When opening the hood:

1. Pull the hood lock release handle ① located below the instrument panel; the hood will then spring up slightly.
2. Pull the lever ② up at the front of the hood with your fingertips and raise the hood.
3. Hold the insulator ③ of the support rod and insert its end into the slot ④ on the front edge of the hood.

When closing the hood:

1. While supporting the hood, return the support rod to its original position.
2. Slowly lower the hood to about 8 to 12 in (20 to 30 cm) above the hood lock, then let it drop.
3. Make sure it is securely latched.

⚠ WARNING

- **Make sure the hood is completely closed and latched before driving. Failure to do so could cause the hood to fly open and result in an accident.**
- **If you see steam or smoke coming from the engine compartment, to avoid injury do not open the hood.**

REAR HATCH

BASIC INFORMATION

⚠ WARNING

Do not drive with the rear hatch open. This could allow dangerous exhaust gases to be drawn into the vehicle. See "Exhaust gas (carbon monoxide)" (P.190) of this manual.

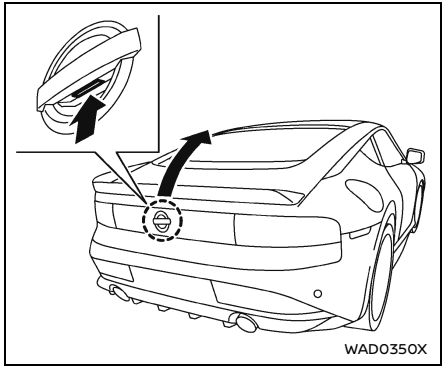
WAD0350X

REAR HATCH OPENER SWITCH

Basic information

The rear hatch can be opened by pushing the rear hatch opener switch when the Intelligent Key is within the operating range of the rear hatch lock/unlock function regardless of the inside lock knob position. (See "Intelligent Key system" (P.148).)

To close the rear hatch, push it down securely.

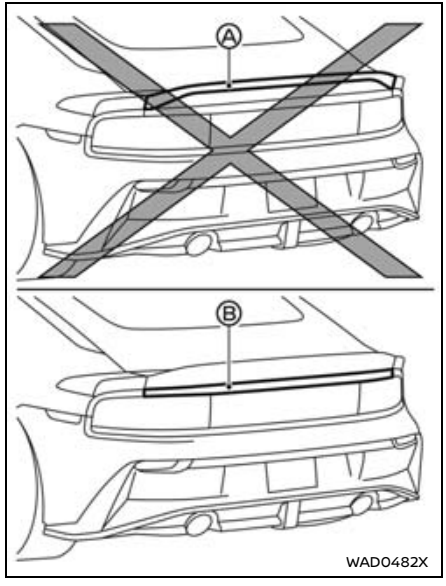

WAD0482X

NISMO models

⚠ CAUTION

Do not use the rear spoiler Ⓐ to open or close the rear hatch. Doing so may damage the rear spoiler.

Always hold area Ⓑ to open or close the rear hatch.

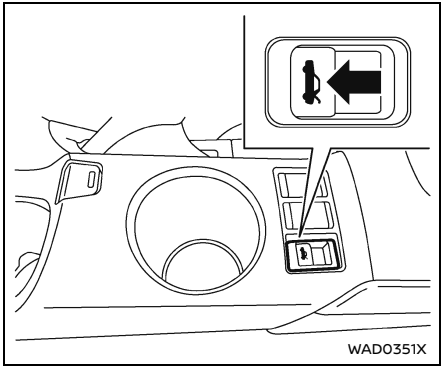

REAR HATCH RELEASE SWITCH

The rear hatch release switch is located on the center console.

Pull the rear hatch release switch to release the rear hatch.

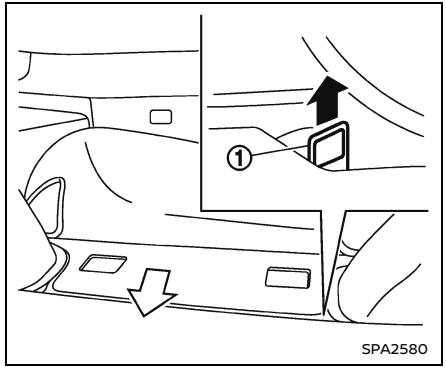

SECONDARY REAR HATCH RELEASE

The secondary rear hatch release mechanism allows opening the rear hatch in the event of discharged battery or emergency.

The release handle is located under the cargo room carpet. To open the rear hatch from the passenger compartment, perform the following procedure.

1. Remove the cargo room carpet.
2. Find the rear hatch release handle ① as shown in the illustration.
3. Free the release handle that is fixed with hook-and-loop fastener.
4. Firmly pull the release handle until the rear hatch releases.

If you use the release handle to open, return the release handle to its original position after each use.

FRONT, SIDE AND REAR UNIQUE PARTS (NISMO models)

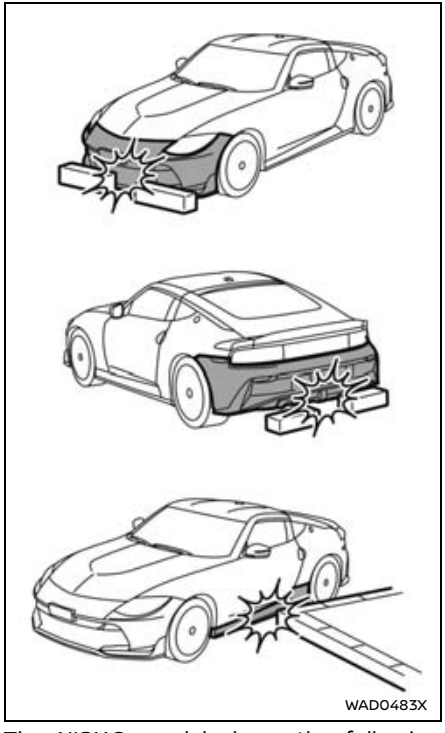

The NISMO models have the following unique parts on the front, side and rear of the vehicle.

- Front bumper with an aerodynamic splitter
- Rear bumper with an aerodynamic diffuser
- Side sill extensions

These parts are close to the ground and may be damaged if they contact objects such as curbs, parking blocks, etc.

⚠ CAUTION

Reduce vehicle speed to decrease the possibility of damaging these parts when:

- **driving on bumpy or rutted roads**
- **entering or exiting parking garages and driveways**
- **driving over speed bumps**

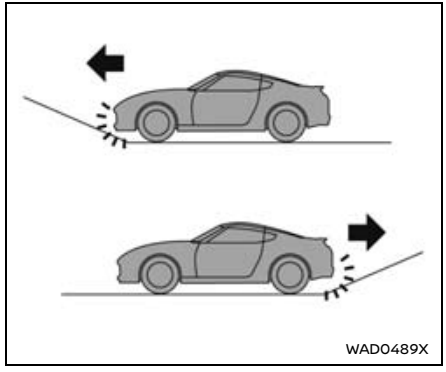

⚠ CAUTION

The approach and departure angles are small. Reduce vehicle speed when the vehicle approaches or leaves a steep hill. Otherwise, the front bumper with an aerodynamic splitter and rear bumper with an aerodynamic diffuser may contact the road surface and be damaged.

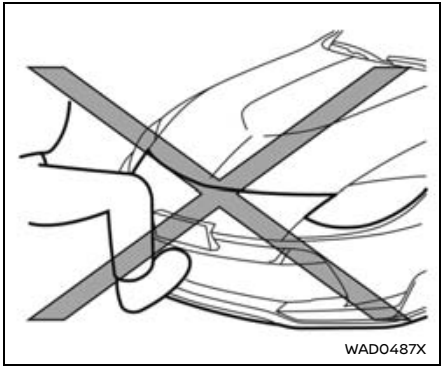

CAUTION

Do not step on the front bumper with an aerodynamic splitter. Doing so could damage it.

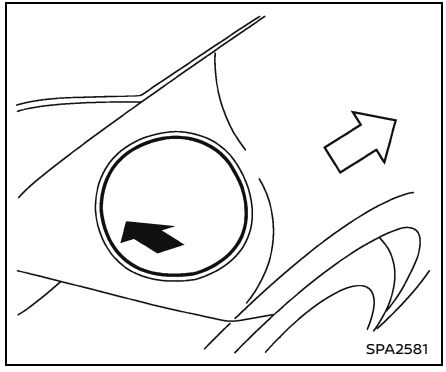

OPENING THE FUEL-FILLER DOOR

To open the fuel-filler door, unlock the fuel-filler door by using one of the following operations, then push the left side of the door.

- Push the door handle request switch with the Intelligent Key carried with you.
- Push the UNLOCK button on the Intelligent Key.
- Push the power door lock switch to the UNLOCK position.

To lock, close the fuel-filler door securely and lock all doors by operating the door handle request switch, the LOCK button on the Intelligent Key or the power door lock switch.

FUEL-FILLER CAP

Basic information

WARNING

- **Gasoline is extremely flammable and highly explosive under certain conditions. You could be burned or seriously injured if it is misused or mishandled. Always stop engine and do not smoke or allow open flames or sparks near the vehicle when refueling.**
- **Do not attempt to top off the fuel tank after the fuel pump nozzle shuts off automatically. Continued refueling may cause fuel overflow, resulting in fuel spray and possibly a fire.**

- **Use only an original equipment type fuel-filler cap as a replacement. It has a built-in safety valve needed for proper operation of the fuel system and emission control system. An incorrect cap can result in a serious malfunction and possible injury. It could also cause the malfunction indicator light to come on.**
- **Never pour fuel into the throttle body to attempt to start your vehicle.**
- **Do not fill a portable fuel container in the vehicle or trailer. Static electricity can cause an explosion of flammable liquid, vapor or gas in any vehicle or trailer. To reduce the risk of serious injury or death when filling portable fuel containers:**
  - **Always place the container on the ground when filling.**
  - **Do not use electronic devices when filling.**
  - **Keep the pump nozzle in contact with the container while you are filling it.**
  - **Use only approved portable fuel containers for flammable liquid.**

⚠ CAUTION

- **If fuel is spilled on the vehicle body, flush it away with water to avoid paint damage.**
- **Insert the cap straight into the fuel-filler tube, then tighten until the fuel-filler cap clicks. Failure to tighten the fuel-filler cap properly may cause the malfunction indicator light (MIL) to illuminate. If the light illuminates because the fuel-filler cap is loose or missing, tighten or install the cap and continue to drive the vehicle. The light should turn off after a few driving trips. If the light does not turn off after a few driving trips, have the vehicle inspected. It is recommended you visit a NISSAN dealer for this service.**

- **The Loose Fuel Cap warning will appear if the fuel-filler cap is not properly tightened. It may take a few driving trips for the message to be displayed. Failure to tighten the fuel-filler cap properly after the Loose Fuel Cap warning appears may cause the Malfunction Indicator Light (MIL) to illuminate.**

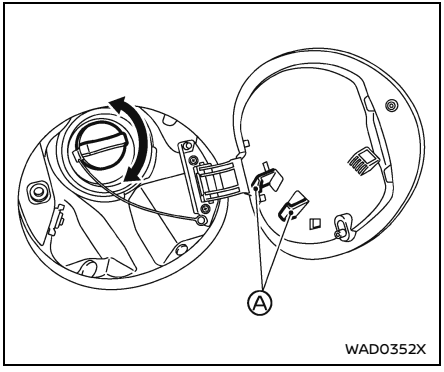

To remove the fuel-filler cap:

1. Turn the fuel-filler cap counterclockwise to remove.
2. Put the fuel-filler cap on the cap holder Ⓐ while refueling.

To install the fuel-filler cap:

1. Insert the fuel-filler cap straight into the fuel-filler tube.
2. Turn the fuel-filler cap clockwise until a single click is heard.

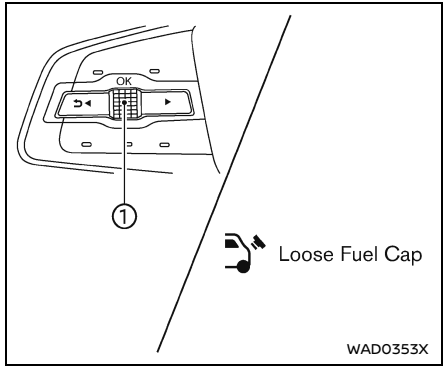

Loose Fuel Cap warning

The Loose Fuel Cap warning appears on the vehicle information display when the fuel-filler cap is not tightened correctly after the vehicle has been refueled. It may take a few driving trips for the message to be displayed.

To turn off the warning, perform the following steps:

1. Remove and install the fuel-filler cap as soon as possible. (See "Fuel-filler cap" (P.161).)
2. Tighten the fuel-filler cap until it clicks.
3. Push the scroll dial ① on the steering wheel for about 1 second to turn off the Loose Fuel Cap warning after tightening the fuel-filler cap.

STEERING WHEEL

BASIC INFORMATION

⚠ WARNING

- **Do not adjust the steering wheel while driving. You could lose control of your vehicle and cause an accident.**
- **Do not adjust the steering wheel any closer to you than is necessary for proper steering operation and comfort. The driver's air bag inflates with great force. If you are unrestrained, leaning forward, sitting sideways or out of position in any way, you are at greater risk of injury or death in a crash. You may also receive serious or fatal injuries from the air bag if you are up against it when it inflates. Always sit back against the seatback and as far away as practical from the steering wheel. Always use the seat belts.**

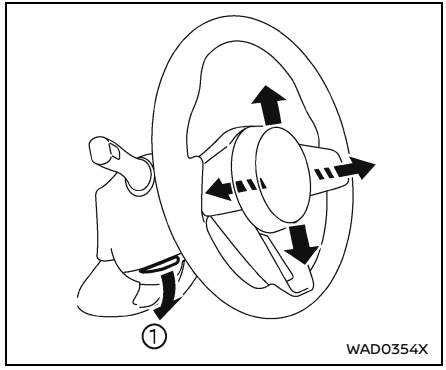

MANUAL OPERATION

Tilt/telescopic operation

Push the lock lever ① down and adjust the steering wheel up, down, forward or rearward to the desired position.

Pull the lock lever up securely to lock the steering wheel in place.

SUN VISORS

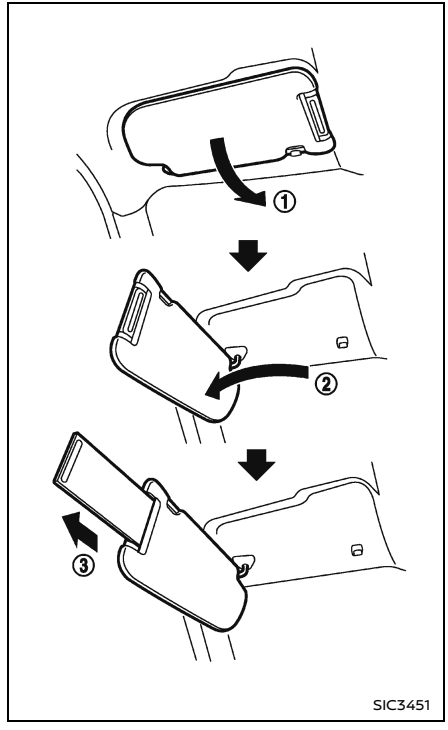

CAUTION

- **Do not store the main sun visor before storing the extension sun visor.**
- **Do not pull the extension sun visor forcedly downwards.**

1. To block out glare from the front, swing down the main sun visor ①.
2. To block glare from the side, remove the main sun visor from the center mount and swing it to the side ②.
3. Draw out the extension sun visor ③ from the main sun visor to block further glare.

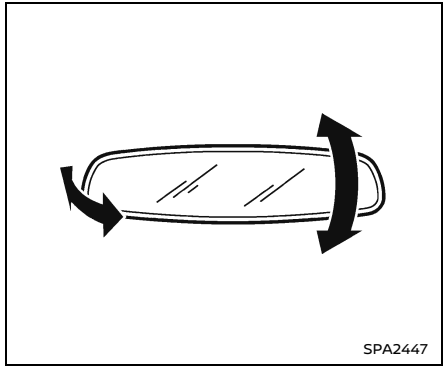

Example

INSIDE MIRROR

Basic information

Adjust the height and the angle of the inside mirror to the desired position.

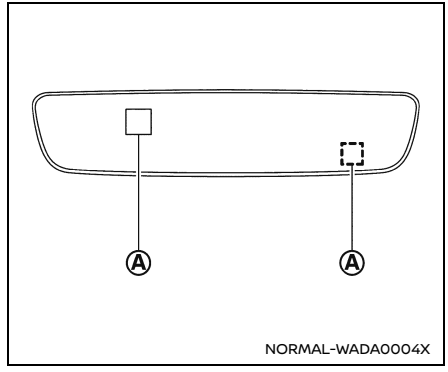

Type A

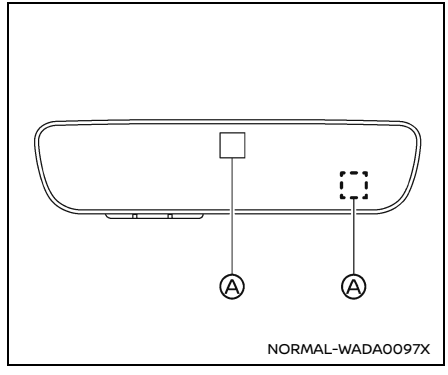

Type B

Automatic anti-glare type

The inside mirror is designed so that it automatically changes reflection according to the intensity of the headlights of the following vehicle.

The anti-glare system will be automatically turned on when the ignition switch is pushed to the ON position.

Do not hang any objects on the mirror or apply glass cleaner. Doing so will reduce the sensitivity of the sensor Ⓐ, resulting in improper operation.

Type B:

For the HomeLink® Universal Transceiver operation, see "HomeLink® Universal Transceiver (if so equipped)" (P.136).

OUTSIDE MIRRORS

Basic information

⚠ WARNING

Objects viewed in the outside mirror on the passenger side are closer than they appear. Be careful when moving to the right. Using only this mirror could cause an accident. Use the inside mirror or glance over your shoulder to properly judge distances to other objects.

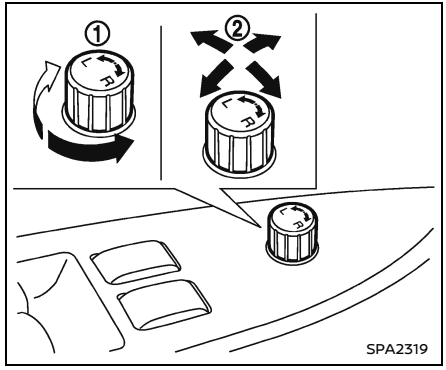

Adjusting outside mirrors

The outside mirror control switch is located on the driver's armrest.

The outside mirror will operate only when the ignition switch is in the ACC or ON position.

Turn the switch right or left to select the right or left side mirror ①, then adjust using the control switch ②.

Defrosting outside mirrors (if so equipped)

The outside mirrors will be heated when the rear window defroster switch is operated.

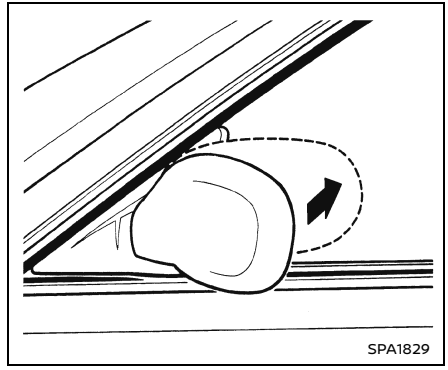

Foldable outside mirrors

Fold the outside mirror by pushing it toward the rear of the vehicle.

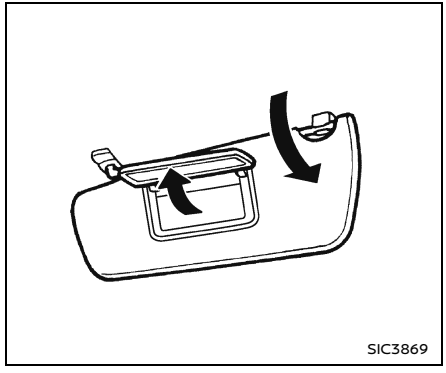

VANITY MIRROR

To use the front vanity mirror, pull down the sun visor and pull up the cover.

MEMO

4 Center display, heater, air conditioner, audio, phone and voice recognition systems

NissanConnect® Owner's Manual 170
Safety information 170
USB memory device, iPod® and Bluetooth® audio player 171
RearView Monitor 172
- Basic information 172
- RearView Monitor system operation 173
- How to read displayed lines 173
- Difference between predictive and actual distances 174
- How to park with predictive course lines 175
- Adjusting the screen 177
- How to turn on and off predictive course lines 177
- RearView Monitor system limitations 177
- System maintenance 178

Ventilators 179
- Center ventilators 179
- Side ventilators 179

Heater and air conditioner 180
- Basic information 180
- Automatic air conditioner 181
- Operating tips 183
- In-cabin microfilter 183
- Servicing air conditioner 183

Radio Antenna 184
- Window antenna 184
- Satellite radio antenna 184

Car phone or CB radio 185

NISSANCONNECT® OWNER'S MANUAL



QR code (U.S. only)

For models equipped with the NissanConnect® system, please refer to your printed NissanConnect® Owner's Manual (if so equipped), or scan the QR code for quick access to the full digital version of the manual, along with other helpful guides related to your vehicle.

Available functions may vary depending on the models and specifications.

- Audio
- Hands-Free Phone
- Apple CarPlay®
- Android Auto™
- NissanConnect® Services
- Navigation system
- Voice recognition
- Amazon Alexa (if so equipped)
- Information and settings viewable on NissanConnect®

SAFETY INFORMATION

⚠ WARNING

- **To operate the system, first park the vehicle in a safe location and set the parking brake. Operating the system while driving can distract the driver and may result in a serious accident.**
- **Exercise extreme caution at all times so full attention may be given to vehicle operation. If the system does not respond immediately, please be patient and keep your eyes on the road. Inattentive driving may lead to a crash resulting in serious injuries or death.**
- **Laws in some jurisdictions may restrict the use of some of the applications and features such as "Text-to-Speech", social networking, and texting. Check local regulations for any requirements before using this feature.**

- **To avoid risk of death or serious personal injury when parking the vehicle with the engine turned on, it should be kept in a well-ventilated area to avoid exposure to carbon monoxide. Do not breathe exhaust gases; they contain colorless and odorless carbon monoxide. Carbon monoxide is dangerous. It can cause unconsciousness or death.**
  - **Apply the parking brake.**
  - **Do not allow children, pets or people who may need assistance to remain in the vehicle.**
  - **Do not leave the vehicle unattended to prevent unauthorized use of the vehicle.**

⚠ WARNING

Do not connect, disconnect or operate the USB device while driving. Doing so can be a distraction. If distracted you could lose control of your vehicle and cause an accident or serious injury.

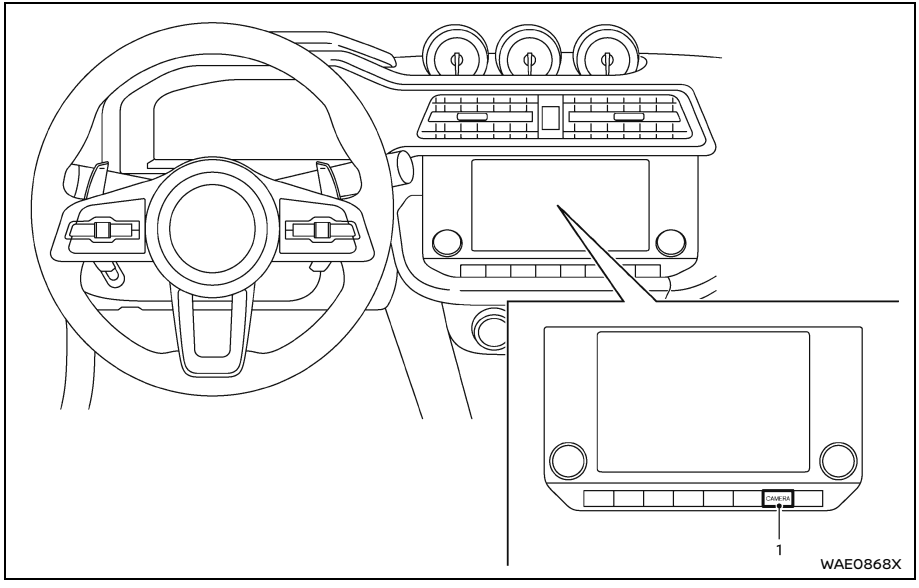

1. CAMERA button

BASIC INFORMATION

⚠ WARNING

- **Failure to follow the warnings and instructions for proper use of the RearView Monitor could result in serious injury or death.**
- **RearView Monitor is a convenience feature and is not a substitute for proper backing. Always turn and look out the windows, and check mirrors to be sure that it is safe to move before operating the vehicle. Always back up slowly.**
- **The system is designed as an aid to the driver in showing large stationary objects directly behind the vehicle, to help avoid damaging the vehicle.**
- **The distance guide line and the vehicle width line should be used as a reference only when the vehicle is on a level paved surface. The distance viewed on the monitor is for reference only and may be different than the actual distance between the vehicle and displayed objects.**

⚠ CAUTION

Do not scratch the camera lens when cleaning dirt or snow from the front of the camera.

The RearView Monitor system automatically shows a rear view of the vehicle

when the shift lever is placed in the R (Reverse) position.

The radio can still be heard while the RearView Monitor is active.

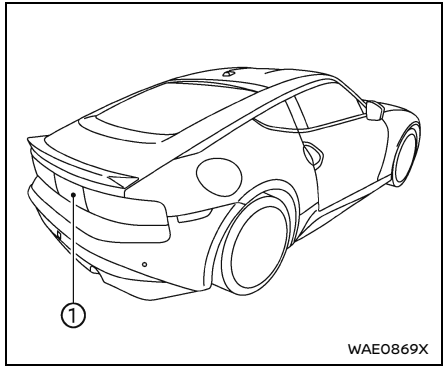

To display the rear view, the RearView Monitor system uses a camera ① located on the rear hatch finisher.

REARVIEW MONITOR SYSTEM OPERATION

With the ignition switch in the ON position, move the shift lever to the R (Reverse) position to operate the RearView Monitor.

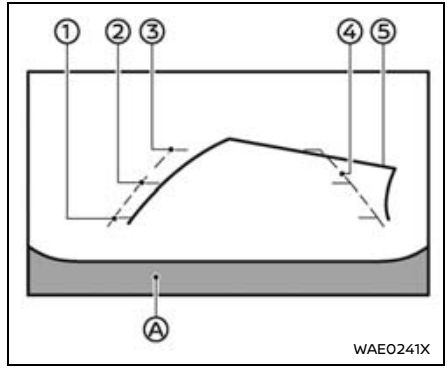

HOW TO READ DISPLAYED LINES

Guiding lines which indicate the vehicle width and distances to objects with reference to the bumper line Ⓐ are displayed on the monitor.

Distance guide lines:

Indicate distances from the vehicle body.

- Red line ①: approximately 1.5 ft (0.5 m)
- Yellow line ②: approximately 3 ft (1 m)
- Green line ③: approximately 7 ft (2 m)

Vehicle width guide lines ④:

Indicate the vehicle width when backing up.

Predictive course lines ⑤:

Indicate the predictive course when backing up. The predictive course lines will be displayed on the monitor when the shift lever is in the R (Reverse) position and if the steering wheel is turned. The predictive course lines will move depending on how much the steering wheel is turned and will not be displayed while the steering wheel is in the straight ahead position.

The vehicle width guide lines and the width of the predictive course lines are wider than the actual width and course.

DIFFERENCE BETWEEN PREDICTIVE AND ACTUAL DISTANCES

Basic information

The displayed guide lines and their locations on the ground are for approximate reference only. Objects on uphill or downhill surfaces or projecting objects will be actually located at distances different from those displayed in the monitor relative to the guide lines (refer to illustrations). When in doubt, turn around and view the objects as you are backing up, or park and exit the vehicle to view the positioning of objects behind the vehicle.

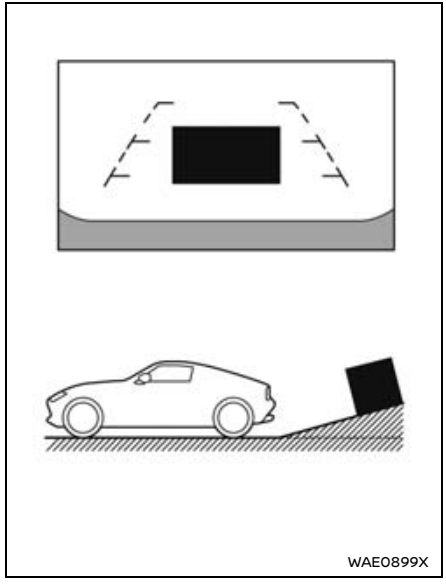

Backing up on a steep uphill

When backing up the vehicle up a hill, the distance guide lines and the vehicle width guide lines are shown closer than the actual distance. Note that any object on the hill is further than it appears on the monitor.

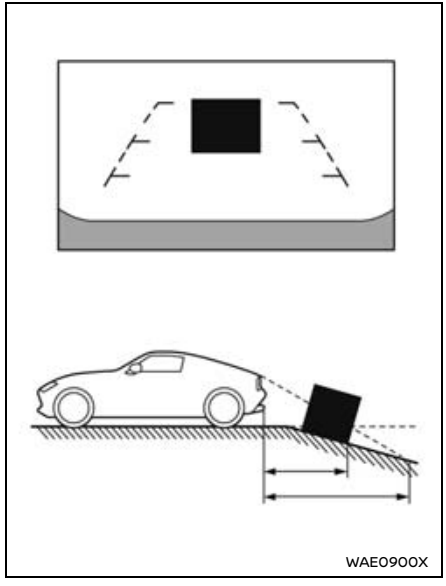

Backing up on a steep downhill

When backing up the vehicle down a hill, the distance guide lines and the vehicle width guide lines are shown further than the actual distance. Note that any object on the hill is closer than it appears on the monitor.

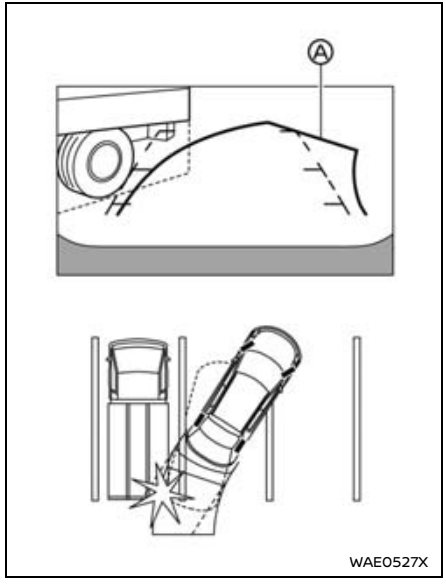

Backing up near a projecting object

The predictive course lines Ⓐ do not touch the object in the display. However, the vehicle may hit the object if it projects over the actual backing up course.

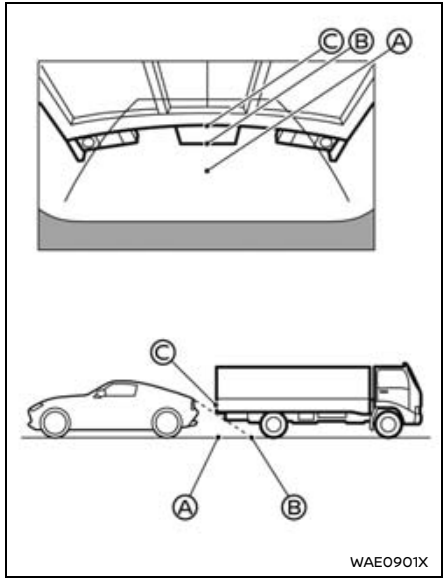

Backing up behind a projecting object

The position Ⓒ is shown further than the position Ⓑ in the display. However, the position Ⓒ is actually at the same distance as the position Ⓐ. The vehicle may hit the object when backing up to the position Ⓐ if the object projects over the actual backing up course.

HOW TO PARK WITH PREDICTIVE COURSE LINES

⚠ WARNING

- **If the tires are replaced with different sized tires, the predictive course lines may be displayed incorrectly.**
- **On a snow-covered or slippery road, there may be a difference between the predictive course line and the actual course line.**
- **If the battery is disconnected or becomes discharged, the predictive course lines may be displayed incorrectly. If this occurs, please perform the following procedures:**
  - **Turn the steering wheel from lock to lock while the engine is running.**
  - **Drive the vehicle on a straight road for more than 5 minutes.**
- **When the steering wheel is turned with the ignition switch in the ON position, the predictive course lines may be displayed incorrectly.**

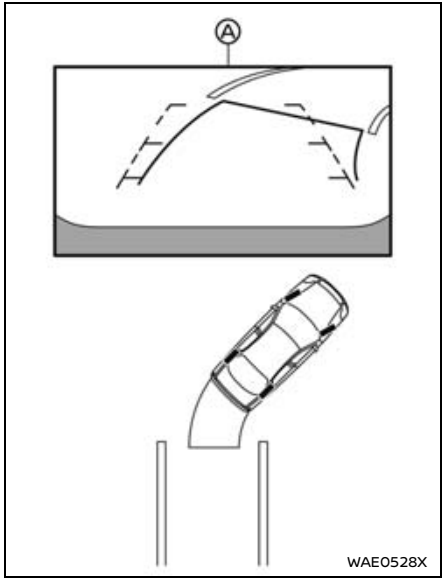

1. Visually check that the parking space is safe before parking your vehicle.
2. The rear view of the vehicle is displayed on the screen Ⓐ when the shift lever is moved to the R (Reverse) position.

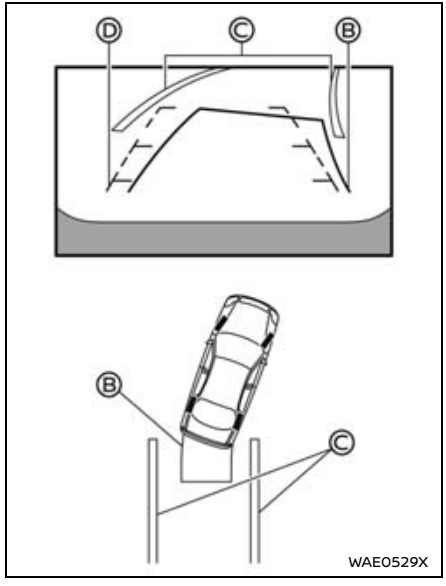

3. Slowly back up the vehicle adjusting the steering wheel so that the predictive course lines Ⓑ enter the parking space Ⓒ.
4. Maneuver the steering wheel to make the vehicle width guide lines Ⓓ parallel to the parking space Ⓒ while referring to the predictive course lines.
5. When the vehicle is parked in the space completely, place the shift position in the P (Park) position (Automatic Transmission models) or the shift lever in the N (Neutral) position (Manual Transmission models) and apply the parking brake.

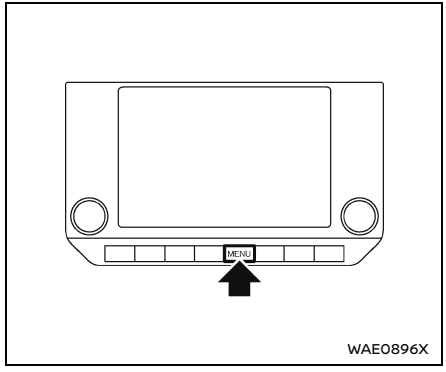

WAE0896X

ADJUSTING THE SCREEN

1. Push the MENU button.
2. Touch the "Settings" key and then touch the "Camera" key.
3. Touch the "Display Settings" key.
4. Touch the "Brightness", "Contrast", "Tint", "Color", or "Black Level" key.
5. Adjust the item by touching the "+" or "–" key on the touch screen display.

NOTE:
Do not adjust any of the display settings of the RearView Monitor while the vehicle is moving. Make sure the parking brake is firmly applied.

HOW TO TURN ON AND OFF PREDICTIVE COURSE LINES

To turn the predictive course lines on and off when the shift position in the P (Park) position (Automatic Transmission models) or the shift lever in the N (Neutral) position (Manual Transmission models), perform the following operation.

1. Push the MENU button.
2. Touch the "Settings" key and then touch the "Camera" key.
3. Touch the "Predictive Course Lines" key to turn the feature ON or OFF.

Pushing the CAMERA button while the shift lever is in the R (Reverse) position can turn on and off the predictive course lines.

REARVIEW MONITOR SYSTEM LIMITATIONS

⚠ WARNING

Listed below are the system limitations for RearView Monitor. Failure to operate the vehicle in accordance with these system limitations could result in serious injury or death.

- **The system cannot completely eliminate blind spots and may not show every object.**
- **Underneath the bumper and the corner areas of the bumper cannot be viewed on the RearView Monitor because of its monitoring range limitation. The system will not show small objects below the bumper, and may not show objects close to the bumper or on the ground.**
- **Objects viewed in the RearView Monitor differ from actual distance because a wide-angle lens is used.**
- **Objects in the RearView Monitor will appear visually opposite compared to when viewed in the rearview and outside mirrors.**
- **Use the displayed lines as a reference. The lines are highly affected by the number of occupants, fuel level, vehicle position, road conditions and road grade.**
- **Make sure that the rear hatch is securely closed when backing up.**
- **Do not put anything on the rearview camera. The rearview camera is installed above the license plate.**

- **When washing the vehicle with high-pressure water, be sure not to spray it around the camera. Otherwise, water may enter the camera unit causing water condensation on the lens, a malfunction, fire or an electric shock.**
- **Do not strike the camera. It is a precision instrument. Otherwise, it may malfunction or cause damage resulting in a fire or an electric shock.**

The following are operating limitations and do not represent a system malfunction:

- When the temperature is extremely high or low, the screen may not clearly display objects.
- When strong light directly shines on the camera, objects may not be displayed clearly.
- Vertical lines may be seen in objects on the screen. This is due to strong reflected light from the bumper.
- The screen may flicker under fluorescent light.
- The colors of objects on the RearView Monitor may differ somewhat from the actual color of objects.
- Objects on the monitor may not be clear in a dark environment.
- There may be a delay when switching between views.
- If dirt, rain or snow accumulates on the camera, the RearView Monitor may not display objects clearly. Clean the camera.
- Do not use wax on the camera lens. Wipe off any wax with a clean cloth dampened with a diluted mild cleaning agent, then wipe with a dry cloth.

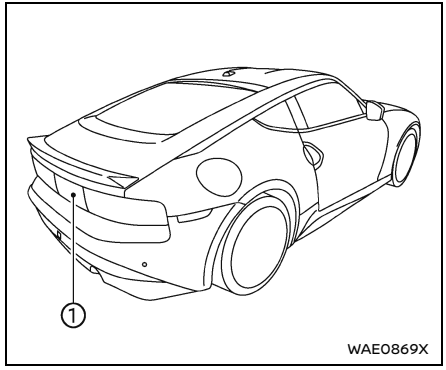

SYSTEM MAINTENANCE

⚠ CAUTION

- **Do not use alcohol, benzine or thinner to clean the camera. This will cause discoloration.**
- **Do not damage the camera as the monitor screen may be adversely affected.**

If dirt, rain or snow accumulates on the camera ①, RearView Monitor may not display objects clearly. Clean the camera by wiping it with a cloth dampened with a diluted mild cleaning agent and then wip-

ing it with a dry cloth.

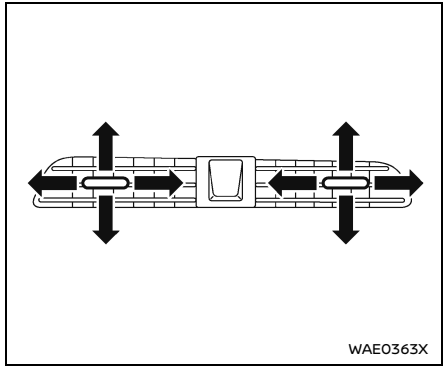

CENTER VENTILATORS

Open or close the vents, and adjust the air flow direction of the ventilators by moving the center knob as illustrated.

Moving the center knob toward the center of the vehicle will close the ventilator.

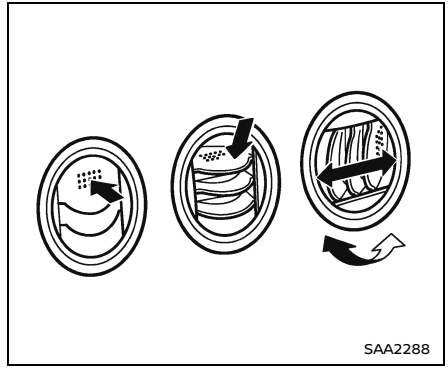

SIDE VENTILATORS

Open or close, and adjust the air flow direction of ventilators as illustrated.

HEATER AND AIR CONDITIONER

BASIC INFORMATION

⚠ WARNING

- **The heater and air conditioner operate only when the engine is running.**
- **Never leave children or adults who would normally require the support of others alone in the vehicle. Pets should not be left alone either. They could unknowingly activate switches or controls and inadvertently become involved in a serious accident and injure themselves. On hot, sunny days, temperatures in a closed vehicle could quickly become high enough to cause severe or possibly fatal injuries to people or animals.**
- **Do not use the recirculation mode for long periods as it may cause the windows to fog up.**
- **Do not adjust the heating and air conditioning controls while driving so that full attention may be given to vehicle operation.**

Start the engine and operate the heater and air conditioner system.

NOTE:

- **Odors from inside and outside the vehicle can build up in the air conditioner unit. Odor can enter the passenger compartment through the vents.**
- **When parking, set the heater and air conditioner controls to turn off air recirculation to allow fresh air into the passenger compartment. This should help reduce odors inside the vehicle.**

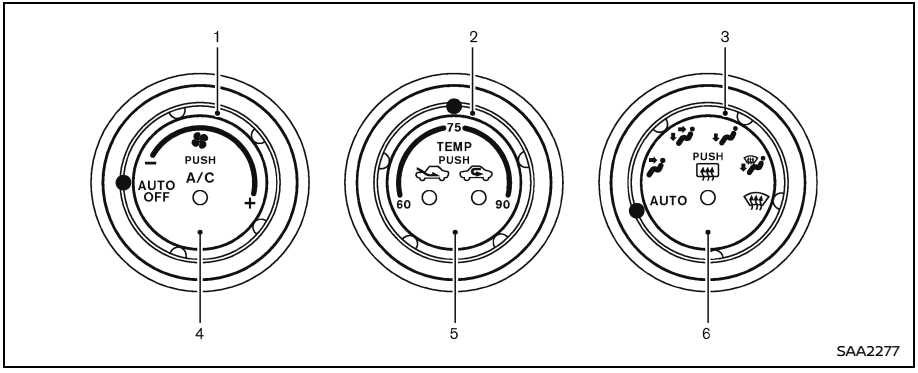

AUTOMATIC AIR CONDITIONER

Basic information

1. " " fan speed control dial
2. Temperature control dial*
   * The display of degrees:
   "60-75-90" is used for °F (US).
   "18-25-32" is used for °C (Canada).
3. Air flow control dial
4. "A/C" air conditioner button
5. Intake air control button ("" outside air and "" air recirculation)
6. " " rear window defroster button (See "Rear window defroster switch" (P.111).)

Automatic operation

Cooling and/or dehumidified heating (AUTO):

This mode may be used all year round. The system works automatically to control the inside temperature, air flow distribution and fan speed after the preferred temperature is set manually.

1. Turn the " " fan speed control dial and air flow control dial to the "AUTO" position. The air conditioner will automatically turn on.
2. Turn the temperature control dial to set the desired temperature.

- The temperature of the passenger compartment will be maintained automatically. Air flow distribution and fan speed are also controlled automatically.

A visible mist may be seen coming from the ventilators in hot, humid conditions as the air is cooled rapidly. This does not indicate a malfunction.

Dehumidified defrosting or defogging:

1. Turn the " " fan speed control dial to the desired position.
2. Turn the air flow control dial to the " " position.
3. Turn the temperature control dial to set the desired temperature.
   - To quickly remove ice from the outside of the windows, turn the " " fan speed control dial to the maximum position.
   - As soon as possible after the windshield is clean, turn the air flow control dial to the "AUTO" position to return to the auto mode.
   - When the air flow control dial is turned to the " " or " " position,

the air conditioner will automatically be turned on at outside temperatures above 23°F (−5°C) to defog the windshield, and the air recirculation mode will automatically be turned off.

Outside air is drawn into the passenger compartment to improve the defogging performance.

Manual operation

Fan speed control:

Turn the " " fan speed control dial clockwise (+) or counterclockwise (−) to manually control the fan speed.

Turn the dial to the "AUTO" position to return to automatic control of the fan speed.

Temperature control:

Turn the temperature control dial to set the desired temperature.

- The temperature can be set within the following range.
  - For U.S.: 60 to 90°F (16 to 32°C)
  - For Canada: 64 to 90°F (18 to 32°C)

Air intake control:

- Push the "" air intake control button to recirculate interior air inside the vehicle. The indicator light on the "" side will illuminate.

  The air recirculation mode cannot be activated when the air conditioner is in the front defrosting mode " ".

  When the outside temperature exceeds 70°F (21°C), the air conditioning system may default to air recirculation mode automatically to reduce overall power consumption. To exit air recirculation mode, deselect the air recirculation button (indicator light will turn off) to enter fresh air mode.
- Push the "" air intake control button to draw outside air into the passenger compartment. The indicator light on the "" side will illuminate.
- To switch to the automatic control mode, push the "" air intake control button for approximately 2 seconds. The indicator lights (both air recirculation and outside air circulation sides) will flash twice, and then the air intake will be controlled automatically.

Air flow control:

Turning the air flow control dial selects the air outlet to:

- : Air flows from center and side ventilators.
- : Air flows from center and side ventilators and foot outlets.
- : Air flows from foot outlets.*
- : Air flows from defroster and foot outlets.*
- : Air flows from defroster outlets.

*: Some air flows available from side ventilators.

To turn the system off

Turn the " " fan speed control dial to the "OFF" position.

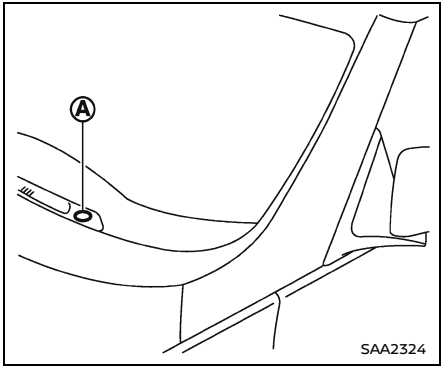

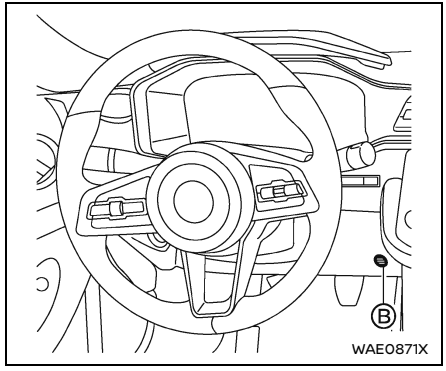

OPERATING TIPS

When the engine coolant temperature and outside air temperature are low, the air flow from the foot outlets may not operate. This is not a malfunction. After the coolant temperature warms up, air will flow normally from the foot outlets.

The sensors Ⓐ and Ⓑ on the instrument panel helps maintain a constant temperature. Do not put anything on or around this sensor.

IN-CABIN MICROFILTER

The air conditioning system is equipped with an in-cabin microfilter which collects dirt, pollen, dust, etc. To make sure the air conditioner heats, defogs, and ventilates efficiently, replace the filter in accordance with the specified maintenance intervals listed in the “9. Maintenance and schedules” section. It is recommended to see a NISSAN dealer to replace the filter.

The filter should be replaced if air flow is extremely decreased or when windows fog up easily when operating heater or air conditioning system.

SERVICING AIR CONDITIONER

The air conditioning system in your NISSAN is charged with a refrigerant designed with the environment in mind. **This refrigerant will not harm the earth’s ozone layer.** However, special charging equipment and lubricant are required when servicing your NISSAN air conditioner. Using improper refrigerants or lubricants will cause severe damage to your air conditioning system. (See "Air conditioning system refrigerant and oil recommendations" (P.393).)

Your NISSAN dealer will be able to service your environmentally friendly air conditioning system.

⚠ WARNING

The system contains refrigerant under high pressure. To avoid personal injury, any air conditioner service should be done only by an experienced technician with the proper equipment.

WINDOW ANTENNA

The antenna pattern is printed inside the rear window.

⚠ CAUTION

- **Do not place metalized film near the rear window glass or attach any metal parts to it. This may cause poor reception or noise.**
- **When cleaning the inside of the rear window, be careful not to scratch or damage the rear window antenna. Lightly wipe along the antenna with a dampened soft cloth.**
- **Do not damage the antenna pattern with luggage.**

SATELLITE RADIO ANTENNA

The antenna is located on the rear part of the vehicle roof.

⚠ CAUTION

- **A build up of ice on the antenna can affect radio performance. Remove the ice to restore radio reception.**
- **When removing snow from the roof, do not apply strong force to the antenna. That may cause broken antenna and roof panel dent.**
- **When using a high pressure car wash, keep the high pressure nozzle away from the antenna. The seal may be deformed or damaged.**
- **The radio performance may be affected if cargo carried on the roof blocks the radio signal. If possible, do not put cargo near the antenna.**

CAR PHONE or CB RADIO

When installing a car phone or a CB radio in your vehicle, be sure to observe the following cautions, otherwise the new equipment may adversely affect the electronic control modules and electronic control system harness.

⚠ WARNING

- **A cellular phone should not be used for any purpose while driving so full attention may be given to vehicle operation. Some jurisdictions prohibit the use of cellular phones while driving.**
- **If you must make a call while your vehicle is in motion, the hands-free cellular phone operational mode (if so equipped) is highly recommended. Exercise extreme caution at all times so full attention may be given to vehicle operation.**
- **If a conversation in a moving vehicle requires you to take notes, pull off the road to a safe location and stop your vehicle before doing so.**

⚠ CAUTION

- **Keep the antenna as far away as possible from the electronic control modules.**
- **Keep the antenna wire more than 8 in (20 cm) away from the electronic control system harness. Do not route the antenna wire next to any harness.**
- **Adjust the antenna standing-wave ratio as recommended by the manufacturer.**
- **Connect the ground wire from the CB radio chassis to the body.**
- **For details, it is recommended you visit a NISSAN dealer.**

MEMO

5 Starting and driving

Precautions when starting and driving 190
- Basic information 190
- Exhaust gas (carbon monoxide) 190
- Three-way catalyst 190
- Turbocharger system 191
- Tire Pressure Monitoring System (TPMS) 191
- Avoiding collision and rollover 195
- Off-road recovery 195
- Rapid air pressure loss 196
- Drinking alcohol/drugs and driving 196

Push-button ignition switch 197
- Basic information 197
- Operating range for engine start function 197
- Push-button ignition switch operation 198
- Push-button ignition switch positions 199
- Emergency engine shut off 199
- Automatic engine shut-off 199
- Intelligent Key battery discharge 200

Before starting the engine 200

Starting the engine 201

Driving the vehicle 202
- Automatic transmission 202
- Manual Transmission 207
- Upshift indicator 211

Launch Control (if so equipped) 212
- Basic information 212
- How to use launch control function 212

Parking brake 214

Drive Mode Selector (for AT models and NISMO models) 215
- Basic information 215
- Standard Mode 215
- Sport Mode 215
- Sport+ Mode (for NISMO AT models) 216

Lane Departure Warning (LDW) 216
- Basic information 216
- LDW system operation 217
- How to enable/disable the LDW system 218
- LDW system limitations 219
- System temporarily unavailable 220
- System malfunction 220
- System maintenance 220

Blind Spot Warning (BSW) 221
- Basic information 221
- BSW system operation 222
- How to enable/disable the BSW system 223
- BSW system limitations 224
- BSW driving situations 225
- System temporarily unavailable 227

System malfunction 227
System maintenance 228
Intelligent Cruise Control (ICC) 230
Basic information 230
How to select the cruise control mode 232
Vehicle-to-vehicle distance control mode 232
Conventional (fixed speed) cruise control mode 246
Automatic Emergency Braking (AEB) with Pedestrian Detection system 250
Basic information 250
AEB with Pedestrian Detection system operation 251
Turning the AEB with Pedestrian Detection system ON/OFF 253
AEB with Pedestrian Detection system limitations 253
System temporarily unavailable 257
System malfunction 259
System maintenance 259
Rear Cross Traffic Alert (RCTA) 261
Basic information 261
RCTA system operation 261
How to enable/disable the RCTA system 263
RCTA system limitations 264
System temporarily unavailable 266
System malfunction 266
System maintenance 266
Intelligent Forward Collision Warning (I-FCW) 268
Basic information 268
I-FCW system operation 270
Turning the I-FCW system ON/OFF 271
I-FCW system limitations 273
System temporarily unavailable 274
System malfunction 275
System maintenance 275
Intelligent Driver Alertness (I-DA) 277
Basic information 277
I-DA system operation 277
How to enable/disable the I-DA system 278
I-DA system limitations 278
System malfunction 279
Hill Start Assist system 279
Front and rear sonar system 280
Basic information 280
System operation 281
Sonar system settings 282
Sonar limitations 282
System temporarily unavailable 283
System maintenance 283
Break-in schedule 284
Fuel efficient driving tips 284
Increasing fuel economy 285
Limited Slip Differential (LSD) (if so equipped) 286
Parking/parking on hills 287
Electric power steering 288

Brake system 289
Braking precautions 289
Parking brake break-in 289
Brake assist 290
Brake assist 290
Anti-lock Braking System (ABS) 290
Vehicle Dynamic Control (VDC) system 291
Cold weather driving 293
Freeing a frozen door lock 293
Antifreeze 293
Battery 293
Draining of coolant water 293
Tire equipment 293
Special winter equipment 294
Driving on snow or ice 294
Parking brake 294
Engine block heater (if so equipped) 295
Active noise cancellation/Active sound enhancement (if so equipped) 296

PRECAUTIONS WHEN STARTING AND DRIVING

BASIC INFORMATION

⚠ WARNING

- **Do not leave children or adults who would normally require the support of others alone in your vehicle. Pets should not be left alone either. They could accidentally injure themselves or others through inadvertent operation of the vehicle. Also, on hot, sunny days, temperatures in a closed vehicle could quickly become high enough to cause severe or possibly fatal injuries to people or animals.**
- **Properly secure all cargo to help prevent it from sliding or shifting. Do not place cargo higher than the seatbacks. In a sudden stop or collision, unsecured cargo could cause personal injury.**

If the engine oil temperature is high, the engine protection mode, which helps reduce the chance of engine damage, could activate and automatically decrease engine power. Driving while the engine oil temperature is high may result in engine damage.

EXHAUST GAS (carbon monoxide)

⚠ WARNING

- **Do not breathe exhaust gases; they contain colorless and odorless carbon monoxide. Carbon monoxide is dangerous. It can cause unconsciousness or death.**
- **If you suspect that exhaust fumes are entering the vehicle, drive with all windows fully open, and have the vehicle inspected immediately.**
- **Do not run the engine in closed spaces such as a garage.**
- **Do not park the vehicle with the engine running for any extended length of time.**
- **Keep the rear hatch closed while driving, otherwise exhaust gases could be drawn into the passenger compartment. If you must drive with the rear hatch open, follow these precautions:**
  1) **Open all the windows.**
  2) **Set the air recirculation to off and the fan control to high to circulate the air.**
- **If electrical wiring or other cable connections must pass to a trailer through the seal on the rear hatch or the body, follow the manufacturer's recommendation to prevent carbon monoxide entry into the vehicle.**
- **The exhaust system and body should be inspected by a qualified mechanic whenever:**
  - **The vehicle is raised for service.**
  - **You suspect that exhaust fumes are entering into the passenger compartment.**
  - **You notice a change in the sound of the exhaust system.**
  - **You have had an accident involving damage to the exhaust system, underbody, or rear of the vehicle.**

THREE-WAY CATALYST

The three-way catalyst is an emission control device installed in the exhaust system. Exhaust gases in the three-way catalyst are burned at high temperatures to help reduce pollutants.

⚠ WARNING

- **The exhaust gas and the exhaust system are very hot. Keep people, animals or flammable materials away from the exhaust system components.**
- **Do not stop or park the vehicle over flammable materials such as dry grass, waste paper or rags. They may ignite and cause a fire.**

⚠ CAUTION

- **Do not use leaded gasoline. Deposits from leaded gasoline seriously reduce the three-way catalyst's ability to help reduce exhaust pollutants.**
- **Keep your engine tuned up. Malfunctions in the ignition, fuel injection, or electrical systems can cause overrich fuel flow into the three-way catalyst, causing it to overheat. Do not keep driving if the engine misfires, or if noticeable loss of performance or other unusual operating conditions are detected. Have the vehicle inspected. It is recommended you visit a NISSAN dealer for this service.**
- **Avoid driving with an extremely low fuel level. Running out of fuel could cause the engine to misfire, damaging the three-way catalyst.**
- **Do not race the engine while warming it up.**
- **Do not push or tow your vehicle to start the engine.**

TURBOCHARGER SYSTEM

The turbocharger system uses engine oil for lubrication and cooling of its rotating components. The turbocharger turbine turns at extremely high speeds and it can reach an extremely high temperature. It is essential to maintain a clean supply of oil flowing through the turbocharger system. A sudden interruption of oil supply may cause a malfunction in the turbocharger.

To ensure prolonged life and performance of the turbocharger, it is essential to comply with the following maintenance procedure.

⚠ CAUTION

- **Change your engine oil according to the recommended intervals shown in the "Maintenance and schedules" (P.365).**
- **Use only the recommended engine oil. (See "Capacities and recommended fluids/lubricants" (P.387).)**
- **If the engine has been operating at high rpm for an extended period of time, let it idle for a few minutes prior to turn off.**
- **Do not accelerate your engine to high rpm immediately after starting it.**

TIRE PRESSURE MONITORING SYSTEM (TPMS)

Basic information

Each tire, including the spare (if provided), should be checked monthly when cold

and inflated to the inflation pressure recommended by the vehicle manufacturer on the vehicle placard or tire inflation pressure label. (If your vehicle has tires of a different size than the size indicated on the vehicle placard or tire inflation pressure label, you should determine the proper tire inflation pressure for those tires.)

As an added safety feature, your vehicle has been equipped with a tire pressure monitoring system (TPMS) that illuminates a low tire pressure telltale when one or more of your tires is significantly under-inflated. Accordingly, when the low tire pressure telltale illuminates, you should stop and check your tires as soon as possible, and inflate them to the proper pressure. Driving on a significantly under-inflated tire causes the tire to overheat and can lead to tire failure. Under-inflation also reduces fuel efficiency and tire tread life, and may affect the vehicle's handling and stopping ability.

Please note that the TPMS is not a substitute for proper tire maintenance, and it is the driver's responsibility to maintain correct tire pressure, even if under-inflation has not reached the level to trigger illumination of the TPMS low tire pressure telltale.

Your vehicle has also been equipped with a TPMS malfunction indicator to indicate when the system is not operating properly. The TPMS malfunction indicator is combined with the low tire pressure telltale. When the system detects a malfunction, the telltale will flash for approximately one minute and then remain continuously illuminated. This sequence will continue upon subsequent vehicle start-ups as long as the malfunction exists. When the malfunction indicator is illuminated, the system may not be able to detect or signal low tire pressure as intended. TPMS malfunctions may occur for a variety of reasons, including the installation of replacement or alternate tires or wheels on the vehicle that prevent the TPMS from functioning properly. Always check the TPMS malfunction telltale after replacing one or more tires or wheels on your vehicle to ensure that the replacement or alternate tires and wheels allow the TPMS to continue to function properly.

Additional information

- The TPMS will activate only when the vehicle is driven at speeds above 16 MPH (25 km/h). Also, this system may not detect a sudden drop in tire pressure (for example a flat tire while driving).
- The low tire pressure warning light does not automatically turn off when the tire pressure is adjusted. After the tire is inflated to the recommended pressure, the vehicle must be driven at speeds above 16 MPH (25 km/h) to activate the TPMS and turn off the low tire pressure warning light. Use a tire pressure gauge to check the tire pressure.
- The "Tire Pressure Low - Add Air" warning also appears on the vehicle information display when the low tire pressure warning light is illuminated and low tire pressure is detected. The "Tire Pressure Low - Add Air" warning turns off when the low tire pressure warning light turns off.

  The "Tire Pressure Low - Add Air" warning appears each time the ignition switch is placed in the ON position as long as the low tire pressure warning light remains illuminated.

  The "Tire Pressure Low - Add Air" warning does not appear if the low tire pressure warning light illuminates to indicate a TPMS malfunction.
- Tire pressure rises and falls depending on the heat caused by the vehicle's operation and the outside temperature. Do not reduce the tire pressure after driving because the tire pressure

rises after driving. Low outside temperature can lower the temperature of the air inside the tire which can cause a lower tire inflation pressure. This may cause the low tire pressure warning light to illuminate. If the warning light illuminates in low ambient temperature, check the tire pressure for all four tires.

- You can also check the tire pressure of all tires in the vehicle information display.

For additional information, see "Low tire pressure warning light" (P.83) and "Tire Pressure Monitoring System (TPMS)" (P.299).

⚠ WARNING

- **If the low tire pressure warning light illuminates while driving, avoid sudden steering maneuvers or abrupt braking, reduce vehicle speed, pull off the road to a safe location and stop the vehicle as soon as possible. Driving with under-inflated tires may permanently damage the tires and increase the likelihood of tire failure. Serious vehicle damage could occur and may lead to an accident and could result in serious personal injury. Check the tire pressure for all four tires. Adjust the tire pressure to the recommended COLD tire pressure shown on the Tire and Loading Information label to turn the low tire pressure warning light OFF. If the light still illuminates while driving after adjusting the tire pressure, a tire may be flat or the TPMS may be malfunctioning. If you have a flat tire, repair it with the tire puncture repair kit as soon as possible. If no tire is flat and all tires are properly inflated, it is recommended you consult a NISSAN dealer.**
- **Replacing tires with those not originally specified by NISSAN could affect the proper operation of the TPMS.**
- **NISSAN recommends using only Genuine NISSAN Emergency Tire Sealant provided with your vehicle. Other tire sealants may damage the valve stem seal which can cause the tire to lose air pressure. It is recommended you visit a NISSAN dealer as soon as possible after using tire repair sealant.**
- **To help avoid serious personal injury or death, when checking your tire pressure, either as part of routine maintenance or because of a TPMS alert, please check the pressure in all of your tires. Driving on underinflated tires can cause tire failure and interfere with the proper operation of other vehicle systems.**

⚠ CAUTION

- **The TPMS may not function properly when the wheels are equipped with tire chains or the wheels are buried in snow.**

- **Do not place metalized film or any metal parts (antenna, etc.) on the windows. This may cause poor reception of the signals from the tire pressure sensors, and the TPMS will not function properly.**

Some devices and transmitters may temporarily interfere with the operation of the TPMS and cause the low tire pressure warning light to illuminate. Some examples are:

- Facilities or electric devices using similar radio frequencies are near the vehicle.
- If a transmitter set to similar frequencies is being used in or near the vehicle.
- If an electronic device (such as a computer or drive recorder), a DC/AC converter or a smart phone, tablet or other electronic device charger are being used in or near the vehicle.

Low tire pressure warning light may illuminate in the following cases.

- If the vehicle is equipped with a wheel and tire without TPMS.
- If the TPMS has been replaced and the ID has not been registered.
- If the wheel is not originally specified by NISSAN.

NOTE:
FCC Notice:
For USA:
This device complies with Part 15 of the FCC Rules. Operation is subject to the following two conditions: (1) this device may not cause harmful interference, and (2) this device must accept any interference received, including interference that may cause undesired operation.
NOTE:
Changes or modifications not expressly approved by the party responsible for compliance could void the user's authority to operate the equipment.
For Canada:
This device contains licence-exempt transmitter(s)/receiver(s) that comply with Innovation, Science and Economic Development Canada's licence-exempt RSS(s). Operation is subject to the following two conditions: (1) This device may not cause interference. (2) This device must accept any interference, including interference that may cause undesired operation of the device.

TPMS with Easy Fill Tire Alert

When adding air to an under-inflated tire, the TPMS with Easy Fill Tire Alert provides visual and audible signals outside the vehicle to help you inflate the tires to the recommended COLD tire pressure.

Vehicle set-up:

1. Park the vehicle in a safe and level place.
2. Apply the parking brake and push the park button to shift to the P (Park) position (for automatic transmission model) or the shift lever to the N (Neutral) position (for manual transmission model).
3. Place the ignition switch in the ON position. Do not start the engine.

Operation:

1. Add air to the tire.
2. After a few seconds, the hazard indicators will start flashing.
3. When the designated pressure is reached, the horn beeps once and the hazard indicators stop flashing.
4. Perform the above steps for each tire.

- If the tire is over-inflated more than approximately 4 psi (30 kPa), the horn beeps and the hazard indicators flash 3 times. To correct the pressure, push the core of the valve stem on the tire briefly to release pressure. When the

pressure reaches the designated pressure, the horn beeps once.

- If the hazard indicator does not flash within approximately 15 seconds after starting to inflate the tire, it indicates that the TPMS with Easy Fill Tire Alert is not operating.
- The TPMS will not activate the Easy Fill Tire Alert under the following conditions:
  - If there is interference from an external device or transmitter
  - The air pressure from the inflation device such as those using a power socket is not sufficient to inflate the tire
  - If an electrical equipment is being used in or near the vehicle
  - There is a malfunction in the TPMS system
  - There is a malfunction in the horn or hazard indicators
- If the TPMS with Easy Fill Tire Alert does not operate due to TPMS interference, move the vehicle about 3 ft (1m) backward or forward and try again.

If the TPMS with Easy Fill Tire Alert is not working, use a tire pressure gauge.

AVOIDING COLLISION AND ROLLOVER

⚠ WARNING

Failure to operate this vehicle in a safe and prudent manner may result in loss of control or an accident.

Be alert and drive defensively at all times. Obey all traffic regulations. Avoid excessive speed, high speed cornering, or sudden steering maneuvers, because these driving practices could cause you to lose control of your vehicle. **As with any vehicle, a loss of control could result in a collision with other vehicles or objects, or cause the vehicle to rollover, particularly if the loss of control causes the vehicle to slide sideways.** Be attentive at all times, and avoid driving when tired. Never drive when under the influence of alcohol or drugs (including prescription or over-the-counter drugs which may cause drowsiness). Always wear your seat belt as outlined in the "Seat belts" (P.24) of this manual, and also instruct your passengers to do so.

Seat belts help reduce the risk of injury in collisions and rollovers. **In a rollover crash, an unbelted person is significantly more likely to die than a person wearing a seat belt.**

OFF-ROAD RECOVERY

While driving, the right side or left side wheels may unintentionally leave the road surface. If this occurs, maintain control of the vehicle by following the procedure below. Please note that this procedure is only a general guide. The vehicle must be driven as appropriate based on the conditions of the vehicle, road and traffic.

1. Remain calm and do not overreact.
2. Do not apply the brakes.
3. Maintain a firm grip on the steering wheel with both hands and try to hold a straight course.
4. When appropriate, slowly release the accelerator pedal to gradually slow the vehicle.
5. If there is nothing in the way, steer the vehicle to follow the road while the vehicle speed is reduced. Do not attempt to drive the vehicle back onto the road surface until vehicle speed is reduced.
6. When it is safe to do so, gradually turn the steering wheel until both tires return to the road surface. When all tires are on the road surface, steer the

vehicle to stay in the appropriate driving lane.

- If you decide that it is not safe to return the vehicle to the road surface based on vehicle, road or traffic conditions, gradually slow the vehicle to a stop in a safe place off the road.

RAPID AIR PRESSURE LOSS

Rapid air pressure loss or a “blow-out” can occur if the tire is punctured or is damaged due to hitting a curb or pothole. Rapid air pressure loss can also be caused by driving on under-inflated tires.

Rapid air pressure loss can affect the handling and stability of the vehicle, especially at highway speeds.

Help prevent rapid air pressure loss by maintaining the correct air pressure and visually inspect the tires for wear and damage. See "Wheels and tires" (P.353) of this manual.

If a tire rapidly loses air pressure or “blows-out” while driving maintain control of the vehicle by following the procedure below. Please note that this procedure is only a general guide. The vehicle must be driven as appropriate based on the conditions of the vehicle, road and traffic.

⚠ WARNING

The following actions can increase the chance of losing control of the vehicle if there is a sudden loss of tire air pressure. Losing control of the vehicle may cause a collision and result in personal injury.

- **The vehicle generally moves or pulls in the direction of the flat tire.**
- **Do not rapidly apply the brakes.**
- **Do not rapidly release the accelerator pedal.**
- **Do not rapidly turn the steering wheel.**

1. Remain calm and do not overreact.
2. Maintain a firm grip on the steering wheel with both hands and try to hold a straight course.
3. When appropriate, slowly release the accelerator pedal to gradually slow the vehicle.
4. Gradually steer the vehicle to a safe location off the road and away from traffic if possible.
5. Lightly apply the brake pedal to gradually stop the vehicle.
6. Turn on the hazard warning flashers and either contact a roadside emergency service to change the tire or see "Repairing flat tire" (P.300) of this Owner’s Manual.

DRINKING ALCOHOL/DRUGS AND DRIVING

⚠ WARNING

Never drive under the influence of alcohol or drugs. Alcohol in the bloodstream reduces coordination, delays reaction time and impairs judgement. Driving after drinking alcohol increases the likelihood of being involved in an accident injuring yourself and others. Additionally, if you are injured in an accident, alcohol can increase the severity of the injury.

NISSAN is committed to safe driving. However, you must choose not to drive under the influence of alcohol. Every year thousands of people are injured or killed in alcohol-related accidents. Although the local laws vary on what is considered to be legally intoxicated, the fact is that alcohol affects all people differently and most people underestimate the effects of alcohol.

Remember, drinking and driving don’t

mix! And that is true for drugs, too (over-the-counter, prescription, and illegal drugs). Don't drive if your ability to operate your vehicle is impaired by alcohol, drugs, or some other physical condition.

BASIC INFORMATION

⚠ WARNING

Do not operate the push-button ignition switch while driving the vehicle except in an emergency. (The engine will stop when the ignition switch is pushed 3 consecutive times or the ignition switch is pushed and held for more than 2 seconds.) If the engine stops while the vehicle is being driven, this could lead to a crash and serious injury.

Before operating the push-button ignition switch, be sure to push the park button to shift to the P (Park) position (for automatic transmission model) or move the shift lever to the N (Neutral) position (for manual transmission model).

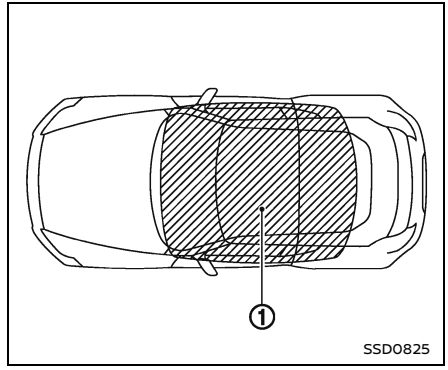

OPERATING RANGE FOR ENGINE START FUNCTION

The Intelligent Key can only be used for starting the engine when the Intelligent Key is within the specified operating range ①.

When the Intelligent Key battery is almost discharged or strong radio waves/noises are present near the operating location, the Intelligent Key system's operating range becomes narrower and may not function properly.

If the Intelligent Key is within the operating range, it is possible for anyone, even someone who does not carry the Intelligent Key, to push the ignition switch to

start the engine.

- The cargo room area is not included in the operating range but the Intelligent Key may function.
- If the Intelligent Key is placed on the instrument panel, rear parcel shelf, inside the glove box or door pocket, the Intelligent Key may not function.
- If the Intelligent Key is placed near the door or window outside the vehicle, the Intelligent Key may function.

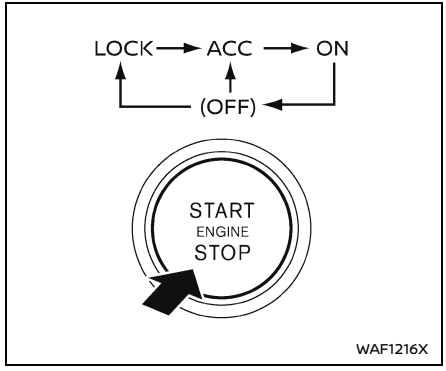

PUSH-BUTTON IGNITION SWITCH OPERATION

Basic information

When the ignition switch is pushed without depressing the brake pedal (automatic transmission model) or the clutch pedal (manual transmission model), the ignition switch position will change as follows:

- Push center once to change to ACC.
- Push center two times to change to ON.
- Push center three times to change to OFF. (No position illuminates.)
- Push center four times to return to ACC.
- Open or close any door to return to LOCK during the OFF position.

If the battery of the vehicle is discharged, the push-button ignition switch cannot be turned from the LOCK position.

Some indicators and warnings for operation are displayed on the vehicle information display. (See "Vehicle information display (except sports mode display)" (P.87).)

Automatic transmission models

The ignition lock is designed so that the ignition switch position cannot be switched to LOCK until the shift position is in the P (Park) position.

When the ignition switch cannot be pushed toward the LOCK position, proceed as follows:

1. Push the park button to shift to the P (Park) position.
2. Push the ignition switch to the OFF position. The ignition switch position indicator will not illuminate.
3. Open the door. The ignition switch will change to the LOCK position.

The shift position can be shifted from

the P (Park) position if the ignition switch is in the ON position and the brake pedal is depressed.

PUSH-BUTTON IGNITION SWITCH POSITIONS

LOCK (Normal parking position)

The ignition switch can only be locked in this position.

The ignition switch will be unlocked when it is pushed to the ACC position while carrying the Intelligent Key.

ACC (Accessories)

This position activates electrical accessories such as the radio, when the engine is not running.

ON (Normal operating position)

This position turns on the ignition system and electrical accessories.

OFF

The engine can be turned off in this position.

Automatic transmission models: The ignition lock is designed so that the ignition switch cannot be switched to the LOCK position until the shift position is in the P (Park) position.

EMERGENCY ENGINE SHUT OFF

To shut off the engine in an emergency situation while driving perform the following procedure:

- Rapidly push the push-button ignition switch 3 consecutive times in less than 1.5 seconds, or
- Push and hold the push-button ignition switch for more than 2 seconds.

⚠ CAUTION

Do not leave the vehicle with the push-button ignition switch in ACC or ON positions when the engine is not running for an extended period. This can discharge the battery.

AUTOMATIC ENGINE SHUT-OFF

This system shuts off the engine automatically after an extended period of time if it has been left running while the transmission is in the P (Park) position (for Automatic Transmission models), or in the N (Neutral) position with the parking brake applied (for Manual Transmission models). This helps avoid unintentional idling, which can waste fuel.

The last 30 seconds of engine run time will be indicated in the vehicle information display. At this time you can use the scroll dial on the steering wheel to select one of the following options:

- "OK" to clear the display and allow the system to shut off the engine. The engine will also shut off if nothing is selected.
- "Disable" to prevent the system from shutting off the engine for the remainder of this trip. The system cannot be cancelled permanently.

NOTE:

- **The timer that monitors idling will restart if the brake pedal or accelerator pedal is pressed, delaying the automatic engine shut-off activation.**
- **The system will automatically turn back on after the engine is restarted.**

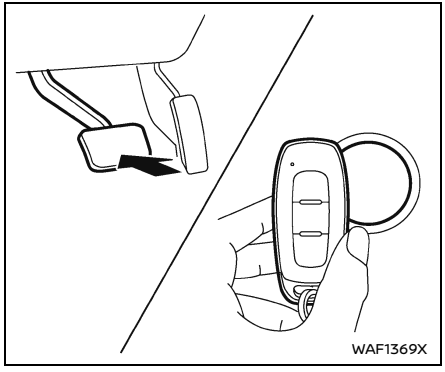

INTELLIGENT KEY BATTERY DISCHARGE

If the battery of the Intelligent Key is discharged, or environmental conditions interfere with the Intelligent Key operation, start the engine according to the following procedure:

1. Push the park button to shift to the P (Park) position (for automatic transmission model) or the shift lever to the N (Neutral) position (for manual transmission model).
2. Firmly apply the foot brake.
3. Touch the ignition switch with the Intelligent Key as illustrated. (A chime will sound.)
4. Push the ignition switch while depressing the brake pedal within 10 seconds after the chime sounds. The engine will start.

After step 3 is performed, when the ignition switch is pushed without depressing the brake pedal, the ignition switch position will change to ACC.

NOTE:

- **When the ignition switch is pushed to the ACC or ON position or the engine is started by the above procedures, the Intelligent Key battery discharge indicator appears in the vehicle information display even if the Intelligent Key is inside the vehicle. This is not a malfunction. To turn off the Intelligent Key battery discharge indicator, touch the ignition switch with the Intelligent Key again.**
- **If the Intelligent Key battery discharge indicator appears, replace the battery as soon as possible. (See "Intelligent Key battery replacement" (P.348).)**

- Make sure the area around the vehicle is clear.
- Check fluid levels such as engine oil, coolant, brake fluid and window washer fluid as frequently as possible, or at least whenever you refuel.
- Check that all windows and lights are clean.
- Visually inspect tires for their appearance and condition. Also check tires for proper inflation.
- Lock all doors.
- Position seat and adjust head restraints.
- Adjust inside and outside mirrors.
- Fasten seat belts and ask all passengers to do likewise.
- Check the operation of warning lights when the ignition switch is pushed to the ON position. (See "Warning lights, indicator lights and audible reminders" (P.78).)

1. Apply the parking brake.
2. **Automatic Transmission (AT) model:**

   Confirm that the vehicle is in the P (Park) position.

   The Intelligent Key must be carried when operating the ignition switch.

   Manual Transmission (MT) model:

   Move the shift lever to the N (Neutral) position. Depress the clutch pedal fully to the floor.

   The starter is designed not to operate unless the clutch pedal is fully depressed.

   The Intelligent Key must be carried when operating the ignition switch.
3. Push the ignition switch to the ON position. Firmly depress the brake pedal (AT model) or the clutch pedal (MT model) and push the ignition switch to start the engine.

   To start the engine immediately, push and release the ignition switch while depressing the brake pedal or the clutch pedal with the ignition switch in any position.

   - If the engine is very hard to start in extremely cold weather or when restarting, depress the accelerator pedal a little (approximately 1/3 to the floor) and while holding, crank the engine. Release the accelerator pedal when the engine starts.
   - If the engine is very hard to start because it is flooded, depress the accelerator pedal all the way to the floor and hold it. Push the ignition switch to the ON position to start cranking the engine. After 5 or 6 seconds, stop cranking by pushing the ignition switch to OFF. After cranking the engine, release the accelerator pedal. Crank the engine **with your foot off the accelerator pedal** by depressing the brake pedal and pushing the push-button ignition switch to start the engine. If the engine starts, but fails to run, repeat the above procedure.

⚠ CAUTION

Do not operate the starter for more than 15 seconds at a time. If the engine does not start, push the ignition switch to OFF and wait 10 seconds before cranking again, otherwise the starter could be damaged.

4. **Warm-up**

   Allow the engine to idle for at least 30 seconds after starting. Do not race the engine while warming it up. Drive at moderate speed for a short distance first, especially in cold weather. In cold weather, keep the engine running for a minimum of 2 - 3 minutes before shutting it off. Starting and stopping the engine over a short period of time may make the vehicle more difficult to start.

   When racing the engine up to 4,500 rpm or more under no load condition, the engine will enter the fuel cut mode.
5. To stop the engine, push the park button to shift to the P (Park) position (AT model) or move the shift lever to the N (Neutral) position (MT model), and push the ignition switch to the OFF position.

NOTE:
Care should be taken to avoid situations that can lead to potential battery discharge and potential no-start conditions such as:

1. **Installation or extended use of electronic accessories that consume battery power when the engine is not running (Phone chargers, GPS, DVD players, etc.)**
2. **Vehicle is not driven regularly and/or only driven short distances.**

In these cases, the battery may need to be charged to maintain battery health.

AUTOMATIC TRANSMISSION

Basic information

The automatic transmission in your vehicle is electronically controlled by a transmission control module to produce maximum efficiency and smooth operation.

Shown on the following pages are the recommended operating procedures for this transmission. Follow these procedures for maximum vehicle performance and driving enjoyment.

Starting the vehicle

After starting the engine, fully depress the foot brake pedal and push the shift lever button before shifting the shift lever to the R (Reverse), N (Neutral), D (Drive) or Manual shift mode position. Be sure the vehicle is fully stopped before attempting to shift the shift lever.

This automatic transmission model is designed so that the foot brake pedal must be depressed before shifting from P (Park) to any drive position while the ignition switch position is ON.

The shift position cannot be placed out of the P (Park) position and into any of the other positions if the ignition switch is pushed to the LOCK, OFF or ACC position.

1. Keep the foot brake pedal depressed and push the shift lever button to shift into a driving position.
2. Release the parking brake and foot brake, then gradually start the vehicle in motion.

⚠ WARNING

- **Do not depress the accelerator pedal while shifting from P (Park) or N (Neutral) to R (Reverse) D (Drive), or manual shift mode. Always depress the brake pedal until shifting is completed. Failure to do so could cause you to lose control and have an accident.**
- **Cold engine idle speed is high, so use caution when shifting into a forward or reverse gear before the engine has warmed up.**
- **Never shift to either the P (Park) or R (Reverse) position while the vehicle is moving forward and P (Park) or D (Drive) position while the vehicle is reversing. This could cause an accident or damage the transmission.**
- **Do not downshift abruptly on slippery roads. This may cause a loss of control.**

⚠ CAUTION

- **Except in an emergency, do not shift to the N (Neutral) position while driving. Coasting with the transmission in the N (Neutral) position may cause serious damage to the transmission.**
- **To avoid possible damage to your vehicle; when stopping the vehicle on an uphill grade, do not hold the vehicle by depressing the accelerator pedal. The foot brake should be used for this purpose.**

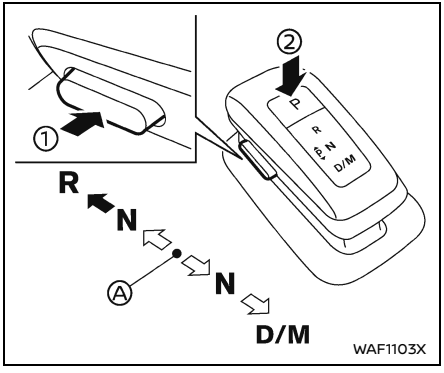

Ⓐ Home position (central position)

Shifting

To move the shift lever,

➡: Push the button ① to shift.

⇨: Shift without pushing the button ①.

Push the park button ② to shift to the P (Park) position.

After starting the engine, fully depress the brake pedal, push the shift lever button ① and move the shift lever from the P (Park) position ② to any of the desired shift positions.

Confirm that the vehicle is in the desired shift position by checking the shift indicator located on the shift lever or on the vehicle information display.

⚠ WARNING

Apply the parking brake if the shift lever is in any position while the engine is not running. Failure to do so could cause the vehicle to move unexpectedly or roll away and result in serious personal injury or property damage.

⚠ CAUTION

- **Use the P (Park), R (Reverse) or D (Drive) position only when the vehicle is completely stopped.**
- **When switching to the desired shift position by operating the shift lever, check that the shift lever returns to the central position by releasing your hand from the lever. Holding the shift lever in a mid-way position may also damage the shift control system.**
- **Do not operate the shift lever while the accelerator pedal is depressed. This may cause a sudden start which could result in an accident.**
- **The following operations are not allowed because excessive force would be applied to the transmission and this may result in damage to the vehicle:**
  - **Moving the shift lever to the R (Reverse) position when driving forward**
  - **Moving the shift lever to the D (Drive) position when reversing**

  If these operations are attempted, a chime sounds and the vehicle shifts to the N (Neutral) position.

P (Park):

⚠ CAUTION

- **To prevent transmission damage, use the P (Park) position only when the vehicle is completely stopped.**
- **Do not slide the shift lever while pushing the park button. This may damage the shift control system.**

Use this position when the vehicle is parked or starting the engine. Always make sure that the vehicle is completely stopped before pushing the park button to engage the P (Park) position. For maximum safety, the brake pedal must be depressed before engaging the P (Park) position. Use this position together with the parking brake. When parking on a hill, first depress the brake pedal, apply the parking brake and then engage the P (Park) position. The parking lock should not be used as a brake when parking. In order to secure the vehicle, always apply the parking brake in addition to the parking lock.

In the event of a malfunction of the vehicle's electronics, the transmission may lock in the P (Park) position. Have the vehicle's electronics checked immediately. It is recommended that you visit a NISSAN dealer for this service.

The P (Park) position is automatically engaged if:

- You switch off the ignition switch
- You unfasten the driver's seat belt and open the driver side door when the vehicle is stationary or driving at very low speed and the transmission is in the D (Drive) position, the N (Neutral) position, the R (Reverse) position, or the manual shift mode with your foot off the brake.

⚠ CAUTION

To avoid AT malfunction, it is recommended that you manually place the shift position in the P (Park) position under the above conditions.

R (Reverse):

⚠ CAUTION

To prevent transmission damage, use the R (Reverse) position only when the vehicle is completely stopped.

Use the R (Reverse) position to back up. Make sure the vehicle is completely stopped before selecting the R (Reverse) position. **The brake pedal must be depressed and the shift lever button pushed to move the shift lever from the home position to R (Reverse). If the vehicle is placed in the R (Reverse) position while the vehicle is moving forward, the chime will sound and the vehicle will switch into the N (Neutral) position.**

N (Neutral):

Neither the forward nor reverse gear is engaged. The engine can be started in this position. You may shift to the N (Neutral) position and restart a stalled engine while the vehicle is moving.

To select this position from P (Park) or D (Drive): without pushing the shift lever button, push the shift lever forward (1 notch) and hold for approximately 0.5 seconds.

To select this position from P (Park) or R (Reverse): without pushing the shift lever button, pull the shift lever backward (1 notch) and hold for approximately 0.5 seconds.

D (Drive):

Use this position for all normal forward driving. The AT changes gears automatically. All forward gears are available. **If the vehicle is placed in the D (Drive) position while the vehicle is reversing, the chime will sound and the vehicle will switch into the N (Neutral) position.**

When using this position, the shift range is displayed on the transmission position indicator in the meter.

Shift ranges up or down one by one as follows:

D→D→D→D→D→D→D→D→D→D
1←2←3←4←5←6←7←8←9

Neutral hold mode function

This function enables you to turn off the engine with the vehicle in the N (Neutral) position. While this function is activated, the vehicle can be moved by pushing with hand (when car washing) even if the ignition switch is in the OFF position. When using this function, release the parking brake.

⚠ WARNING

- **Use this function on a level surface only. Failure to do so may cause the vehicle to move accidentally and could result in a collision or serious personal injury.**
- **Do not use this function for a purpose other than car washing.**
- **When the ignition switch is placed in the ON position after activating this function, depress the brake pedal to stop the vehicle because the shift lever is in the N (Neutral) position.**
- **If this function is not activated regardless of proper operation, transmission may malfunction. It is recommended that you visit a NISSAN dealer for this service.**

To activate the Neutral hold mode, perform the following operations.

1. Push the ignition switch to start the engine.
2. Release the parking brake.
3. Depress and hold the brake pedal.
4. Push the park button.
5. Slide the shift lever to the N (Neutral) position, and hold it for approximately 0.5 seconds until “N” appears in the vehicle information display.
6. Slide the shift lever to the N (Neutral) position again, and hold it for approximately 0.5 seconds, until a message “Neutral Hold Mode has been activated” appears in the vehicle information display. (See "Neutral Hold Mode activated indicator (Automatic transmission models)" (P.100).)
7. Place the ignition switch in the OFF position. The engine will turn off with holding the N (Neutral) position.

To exit the Neutral hold mode, place the vehicle in other than N (Neutral) position.

NOTE:

- **It is necessary to perform the steps 4 through 6 within approximately 5 seconds to prevent incorrect operation.**
- **When the ignition switch is placed in the OFF position while the shift lever is in the N (Neutral) position, a message will appear in the vehicle information display. (See "Neutral Hold Mode guidance indicator (Automatic transmission models)" (P.100).)**
- **If the Neutral hold mode is unavailable, a message will appear in the vehicle information display. (See "Neutral Hold Mode was not activated indicator (Automatic transmission models)" (P.100).) To activate the Neutral hold mode, wait for a while without shifting operation and then perform the operations again.**

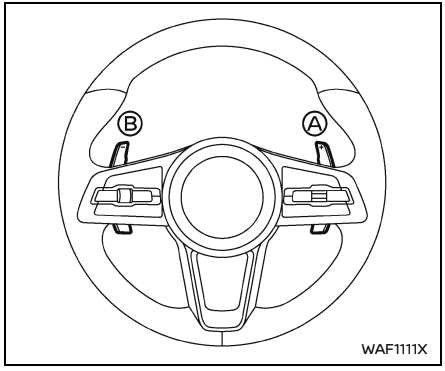

Paddle shifter

Manual shift mode

When the shift lever is moved to the D (Drive) position again with the vehicle in the D (Drive) position while driving, the transmission enters the manual shift mode. Shift range can be selected manually using the paddle shifters on the steering wheel.

When shifting up, pull the right-side paddle shifter (+) Ⓐ. The transmission shifts to the higher range.

When shifting down, pull the left-side paddle shifter (−) Ⓑ. The transmission shifts to the lower range.

When canceling the manual shift mode, move the shift lever to the D (Drive) position again. The transmission returns to the normal driving mode.

When you pull the paddle shifter while in the D (Drive) position, the transmission will shift to the upper or lower range temporarily. The transmission will automatically return to the D (Drive) position after a short period of time. If you want to return to the D (Drive) position manually, pull and hold the paddle shifter for about 1.5 seconds.

In the manual shift mode, the shift range is displayed on the transmission position indicator in the meter.

Shift ranges up or down one by one as follows:

$$1 \underset{\leftarrow}{\overset{\rightarrow}{}} 2 \underset{\leftarrow}{\overset{\rightarrow}{}} 3 \underset{\leftarrow}{\overset{\rightarrow}{}} 4 \underset{\leftarrow}{\overset{\rightarrow}{}} 5 \underset{\leftarrow}{\overset{\rightarrow}{}} 6 \underset{\leftarrow}{\overset{\rightarrow}{}} 7 \underset{\leftarrow}{\overset{\rightarrow}{}} 8 \underset{\leftarrow}{\overset{\rightarrow}{}} 9$$

6 (6th), 7 (7th), 8 (8th) and 9 (9th):

Use this position for all normal forward driving at highway speeds.

5 (5th):

Use these positions when driving up long slopes, or for engine braking when driving down long slopes.

4 (4th), 3 (3rd) and 2 (2nd):

Use these positions for hill climbing or engine braking on downhill grades.

1 (1st):

Use this position when climbing steep hills slowly or driving slowly through deep snow, or for maximum engine braking on steep downhill grades.

- Remember not to drive at high speeds for extended periods of time in lower than 7th gear. This reduces fuel economy.
- Moving the shift lever rapidly to the same side twice will shift the ranges in succession.
- **In the manual shift mode, the transmission may not shift to the selected gear or may automatically shift to the other gear. This helps maintain driving performance and reduces the chance of vehicle damage or loss of control.**
- **When the transmission does not shift to the selected gear, the Automatic Transmission (AT) position indicator will blink and the buzzer will sound.**
- **In the manual shift mode, the transmission automatically shifts down to 1st gear before the vehicle comes to**

a stop. When accelerating again, it is necessary to shift up to the desired range.

Accelerator downshift — In D (Drive) position —

For passing or hill climbing, fully depress the accelerator pedal to the floor. This shifts the transmission down into the lower gear, depending on the vehicle speed.

Fail-safe

When the fail-safe operation occurs, note that the transmission will be locked in any of the forward gears according to the condition.

If the vehicle is driven under extreme conditions, such as excessive wheel spinning and subsequent hard braking, the fail-safe system may be activated. This will occur even if all electrical circuits are functioning properly. In this case, push the ignition switch to the OFF position and wait for 3 seconds. Then push the ignition switch back to the ON position. The vehicle should return to its normal operating condition. If it does not return to its normal operating condition, have the transmission checked and repaired, if necessary. It is recommended you visit a NISSAN dealer for this service.

MANUAL TRANSMISSION

Basic information

⚠ WARNING

- **Do not downshift abruptly on slippery roads. This may cause a loss of control.**
- **Do not over-rev the engine when shifting to a lower gear. This may cause a loss of control or engine damage.**

⚠ CAUTION

- **Do not rest your foot on the clutch pedal while driving. This may damage the clutch.**
- **Fully depress the clutch pedal before shifting to help prevent transmission damage.**
- **Stop your vehicle completely before shifting into R (Reverse).**
- **When the vehicle is stopped with the engine running (for example, at a stop light), shift to N (Neutral) and release the clutch pedal with the foot brake applied.**
- **Do not make a sudden acceleration when the shift position is in R (Reverse). It may cause damage to the transmission or related parts.**

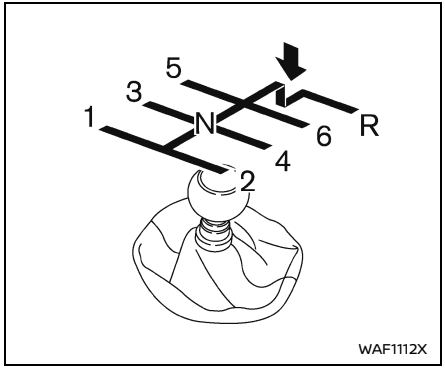

Shifting

To change gears, or when upshifting or downshifting, fully depress the clutch pedal, shift into an appropriate gear, and then slowly and smoothly release the clutch pedal.

This vehicle is equipped with a short throw shifter manual transmission. To ensure smooth gear changes, be sure to fully depress the clutch pedal before operating the shift lever. If the clutch pedal is not fully depressed before the transmission is shifted, a gear noise may be heard. Transmission damage could occur.

Start the vehicle in 1st gear and upshift to 2nd, 3rd, 4th, 5th and 6th gear in sequence according to the vehicle speed.

To back up, depress the shift knob and then move the shift lever to the R (Reverse) position after stopping the vehicle completely.

The shift knob returns to its original position when the shift lever is moved to the N (Neutral) position.

If it is difficult to move the shift lever into R (Reverse) or 1st (Low gear), shift to N (Neutral), then release the clutch pedal. Fully depress the clutch pedal again and shift into R or 1st.

SynchroRev Match mode (S-MODE) (if so equipped)

The SynchroRev Match mode (S-MODE) automatically adjusts the engine speed to match the selecting gear ratio while changing gears.

Precautions:

- Shift lever and clutch pedal operations are not different than a conventional manual transmission.
- Fully depress the clutch pedal. Insufficient pedal depression may cause slow response of this system.
- When the clutch pedal is depressed with the gear still engaged, the engine speed is kept at the proper level for the engaged gear. Thus, the engine speed may be kept high depending on the gear position and vehicle speed.
- When the clutch pedal is depressed with the transmission in neutral, the system operates for approximately 2 seconds, and then the engine speed will decrease to the idle speed.
- When the engine coolant temperature is low right after starting the engine, engine speed synchronization will be delayed or may be insufficient.
- The system controls the engine speed up to the rev limit. Note that S-MODE is not a function that prevents over-revving resulting from shifting mistakes.
- The system does not operate while the vehicle is backing up.
- If the engine speed is limited lower than usual when the engine oil temperature is extremely high, the system will control up to the limited engine speed.

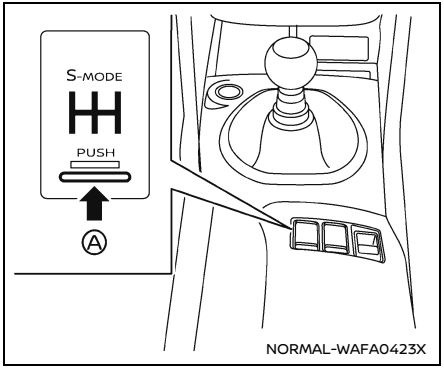

For NISMO models

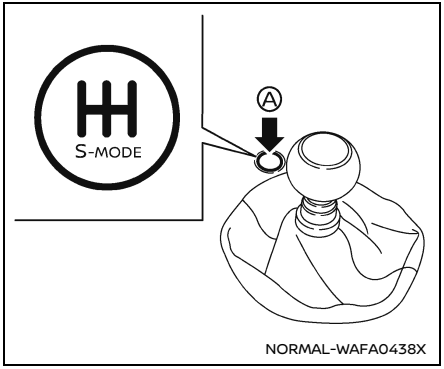

Except for NISMO models

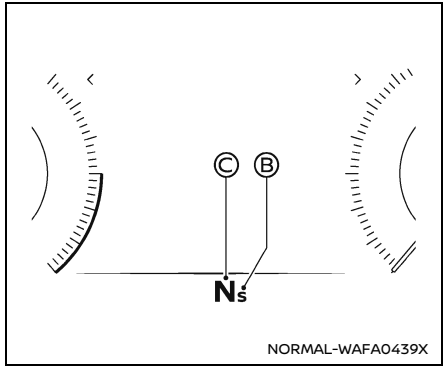

Activating the system:

To activate the S-MODE, push the S-MODE switch Ⓐ. The S-MODE indicator Ⓑ on the vehicle information display will show "S". To deactivate, push and hold the S-MODE switch for more than 1 second. The S-MODE indicator will turn off.

While the S-MODE is off, you can drive the vehicle as a conventional manual transmission model.

Note that the status of the S-MODE (on or off) is memorized even after the ignition switch is turned off; however, it will be initialized (off) when the battery is disconnected. Even if the S-MODE switch is turned on and the S-MODE function may not operate, but manual transmission will operate normally and driving can be continued. Have the system checked. It is recommended you visit a NISSAN dealer for this service.

The transmission position indicator Ⓒ shows the selected gear: N (Neutral), 1, 2, 3, 4, 5, 6, R (Reverse).

SynchroRev Match mode (S-MODE) operation:

The SynchroRev Match mode (S-MODE) automatically adjusts the engine speed by controlling the engine throttle. The accelerator pedal does not have to be depressed.

The system detects the clutch pedal and shift lever operations, and then calculates the target engine speed using the shifting gear position and the vehicle speed information.

The system provides accurate engine speed control that helps achieve quick gear shifting and reduces shift shock on clutch engagement.

- **When downshifting:**

  The engine speed is automatically increased to the target engine speed before the clutch is engaged.

- **When upshifting:**

  The engine speed is automatically kept after the engine speed lowers to the target engine speed.

  Rapid clutch engagement before the engine speed lowers to the target engine speed may cause shift shock.
- **When depressing the clutch pedal with the gear engaged:**

  The engine speed is automatically kept at the proper engine speed for the engaged gear.

  This function will not operate when low (1st) gear is selected.

  There is a delay between the clutch pedal operation and the S-MODE operation. Make sure the engine speed is adjusted before engaging the clutch again.

Suggested up-shift speeds

Shown below are suggested vehicle speeds for shifting into a higher gear. These suggestions relate to fuel economy and vehicle performance. Actual up-shift speeds will vary according to road conditions, the weather and individual driving habits.

For normal acceleration in low altitude areas [less than 4,000 ft (1,219 m)]:

Gear change	MPH (km/h)
1st to 2nd	6 (10)
2nd to 3rd	14 (23)
3rd to 4th	23 (37)
4th to 5th	32 (51)
5th to 6th	37 (60)

For quick acceleration in low altitude areas or in high altitude areas [over 4,000 ft (1,219 m)]:

Gear change	MPH (km/h)
1st to 2nd	15 (24)
2nd to 3rd	25 (40)
3rd to 4th	40 (64)
4th to 5th	45 (72)
5th to 6th	50 (80)

Suggested maximum speed in each gear

Downshift to a lower gear if the engine is not running smoothly, or if you need to accelerate.

Do not exceed the maximum suggested speed (shown below) in any gear. For level road driving, use the highest gear suggested for that speed. Always observe posted speed limits, and drive according to the road conditions, which will ensure safe operation. Do not over-rev the engine when shifting to a lower gear as it may cause engine damage or loss of vehicle control.

Gear	MPH (km/h)
1st	37 (59)
2nd	60 (96)
3rd	85 (137)
4th	—
5th	—
6th	—

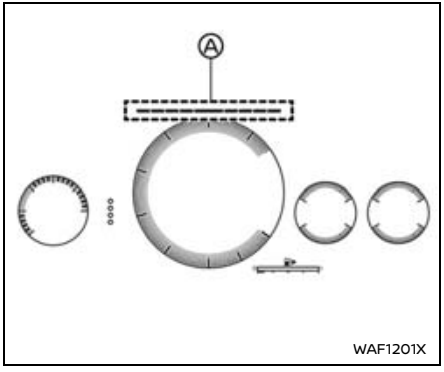

UPSHIFT INDICATOR

The upshift indicator Ⓐ is displayed in the sports mode display and shows the driver the timing to shift into a higher gear by illuminating. The use of the upshift indicator Ⓐ will help you to upshift at a constant engine speed from any gear.

The upshift indicator can be customized. The options are shown in the following table. (See "Vehicle information display" (P.76).)

Mode	Indication color	Conditions
Customization	Green	Illuminates about 1,800 to 2,400 rpm before the set engine speed.
	Yellow	Illuminates about 600 to 1,200 rpm before the set engine speed.
	Red (illuminate)	Illuminates when the engine speed reaches the set engine speed.
Auto	Green	The engine speed that illuminates is set automatically according to each gear position.
	Yellow	
	Red (illuminate)	
	Red (flash)	Flashes when the engine speed reaches near the maximum engine speed.
OFF	No color	Indicator is off at all times.

It is notified that the shift-up timing is imminent when two segments of yellow indicators illuminate. Please shift into the higher gear at the latest when the upshift indicator illuminates in red. If the upshift indicator flashes in red, the fuel supply will be restricted to protect the engine.

LAUNCH CONTROL (if so equipped)

BASIC INFORMATION

This function enables the driver to start acceleration from a stop by:

- Selecting the SPORT mode with the Drive Mode Selector (except for NISMO AT models and MT models (except for NISMO models))
- Selecting the SPORT+ mode with the Drive Mode Selector (for NISMO AT models)
- Pushing the SynchroRev Match mode (S-MODE) switch (for MT models)

⚠ WARNING

- **Failure to follow the warnings and instruction for the use of this feature may cause a loss of vehicle control or a collision which may lead to serious personal injury or death.**
- **Make sure to drive carefully within legal limits.**
- **Only use this function when you can guarantee that it is safe to do so, based on the surrounding traffic conditions.**
- **Do not use this function on slippery or wet roads. This may cause loss of vehicle control and could result in an accident.**
- **The launch control function has been developed not only for controlling the engine and VDC system, but also the settings of the tires. Therefore, any modification of the vehicle may disrupt the vehicle's balance. This will not only reduce the optimum performance of the vehicle but may also cause damage to powertrain components, including the transmission.**

NOTE:

- **When the temperature of the engine coolant and transmission oil is high or low, the function cannot be used. The temperature range in which the launch control function can be used:**
  - **Engine coolant: 140°F - 212°F (60°C - 100°C)**
  - **Automatic Transmission fluid: 140°F - 212°F (60°C - 100°C)**
- **The performance of start may vary depending on the amount of wheel spin ,or increase and decrease of the engine output in response to the outside temperature.**
- **For safety reasons, VDC control may activate automatically when the potential tire performance cannot be exhibited and/or driving on a slippery road surface, such as a wet road, in order to apply the brakes or limit the engine output.**
- **Frequent use of the launch control function increases the load on the powertrain related parts such as the clutch and transmission compared to normal driving. In particular, the clutch (Manual Transmission models) will wear out more quickly.**

HOW TO USE LAUNCH CONTROL FUNCTION

Automatic transmission model

1. Select the SPORT mode (except for NISMO models) or the SPORT+ mode (for NISMO models) with the Drive Mode Selector.
2. Move the shift lever to the D (Drive) position.
3. Depress the brake pedal firmly with your left foot and keep depressing the brake pedal.
4. Depress the accelerator pedal quickly to the floor with your right foot while pulling the right-side and left-side paddle shifter at the same time.

   If the wheel spin occurs due to the weak depressing force on the brake

pedal, the pedal misapplication prevention control system activates from the safety reason.

5. The message "Launch Control" will appear in the vehicle information display.

   If the message "Launch Control" appears, release the both sides of paddle shifters. If you start the vehicle with the paddle shifter pulled, the shift mode will transfer to manual shift from Launch control.
6. Within 6 seconds after depressing the accelerator pedal, release the brake pedal.

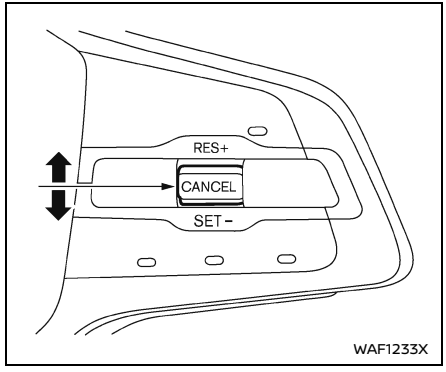

Manual transmission model

1. To activate the S-MODE, push the S-MODE switch.
2. Fully depress the clutch pedal with your left foot.
3. Move the shift lever into 1st gear.
4. Depress the accelerator pedal quickly to the floor with your right foot.
5. The message "Launch Control" will appear in the vehicle information display.

   The engine speed can be changed by 500 rpm operating the CANCEL switch to the RES+ direction or SET- direction on the steering wheel up and down within 6 seconds.

   Initial revolution: 3,000 rpm

   Setting range:

   - except for NISMO models: 3,000 to 5,000 rpm
   - for NISMO models: 3,000 to 4,000 rpm

   The setting engine speed is memorized even after the ignition switch is placed in the OFF position.
6. Within 6 seconds after depressing the accelerator pedal, start the vehicle with the clutch engaged quickly.
7. When starting the vehicle, operate clutch pedal and shift lever with the accelerator pedal depressed.

   If the accelerator pedal is released, the launch control function will be ended.

⚠ WARNING

- **Be sure the parking brake is fully released before driving. Failure to do so can cause brake failure and lead to an accident.**
- **Do not release the parking brake from outside the vehicle.**
- **Do not use the shift lever in place of the parking brake. When parking, be sure the parking brake is fully engaged.**
- **To help avoid risk of injury or death through unintended operation of the vehicle and/or its systems, do not leave children, people who require the assistance of others or pets unattended in your vehicle. Additionally, the temperature inside a closed vehicle on a warm day can quickly become high enough to cause a significant risk of injury or death to people and pets.**

⚠ CAUTION

When parking in an area where the outside temperature is below 32°F (0°C), the parking brake, if applied, may freeze in place and may be difficult to release.

For safe parking, it is recommended that you place the shift lever in the 1st or R (Reverse) position (Manual transmission models), or place the shift position in the P (Park) position (Automatic transmission models) and securely block the wheels.

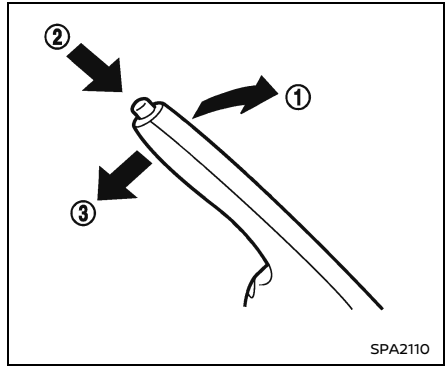

To apply: Pull the parking brake lever up ①.

To release:

1. Firmly apply the foot brake.
2. While pulling up on the parking brake lever slightly, push the button ② and lower the lever completely ③.
3. Before driving, be sure the brake warning light goes out.

DRIVE MODE SELECTOR (for AT models and NISMO models)

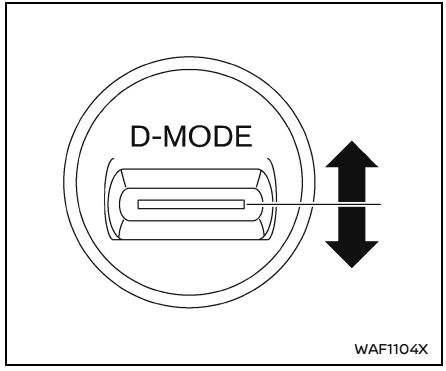

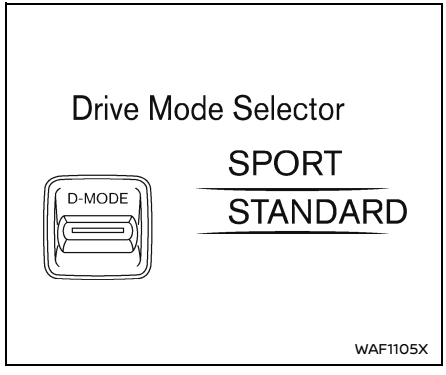

Except for NISMO AT models

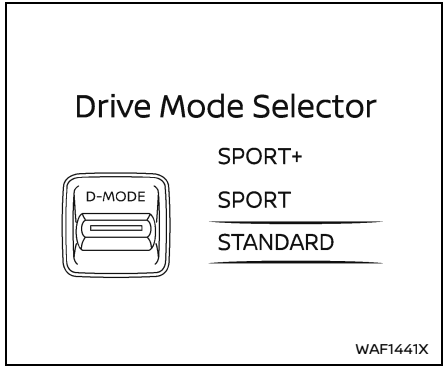

For NISMO AT models

BASIC INFORMATION

Multiple driving modes can be selected by using the Drive Mode Selector.

Except for NISMO AT models:

SPORT and STANDARD

For NISMO AT models:

SPORT+, SPORT and STANDARD

NOTE:

When the Drive Mode Selector selects a mode, the mode may not switch immediately. This is not a malfunction.

The current mode is displayed in the vehicle information display. The mode list will appear in the vehicle information display and you can select the mode.

NOTE:

The mode list will be turned off in approximately 4 seconds after the mode is selected. (The mode list can be turned off by pushing the scroll dial on the steering-wheel mounted controls.)

If the driving mode cannot be switched using the Drive Mode Selector when the ignition switch is in the ON position, have the system checked. It is recommended you visit a NISSAN dealer for this service.

⚠ WARNING

Do not stare at the Drive Mode Selector or the display while driving so that full attention may be given to vehicle operation.

STANDARD MODE

This is the standard mode that is most suitable for normal driving.

This mode will be selected first each time the ignition switch is placed in the ON position.

SPORT MODE

- Adjusts the engine and transmission points for a higher response.

- The setting of the steering system is adjusted to moderately increase steering wheel effort for a sporty feel.
- Changes the setting of VDC (Vehicle Dynamic Control) for a more sporty driving experience.

SPORT+ MODE (for NISMO AT models)

In addition to the characteristics of the SPORT mode, this mode heightens adjusting the engine and transmission points for a higher response.

More steering effort is needed while the vehicle is turning than the SPORT mode. Because of this, you can feel a higher steering response from the ground.

⚠ WARNING

- **Vehicle handling and performance may be adversely affected when using the SPORT mode or the SPORT+ mode (for NISMO AT models). To avoid injury or death, select the Drive Mode Selector the STANDARD mode if noticeable loss of steering control occurs.**
- **VDC operation is reduced when the Drive Mode Selector is used to select the SPORT mode or the SPORT+ mode (for NISMO AT models). The VDC system may not operate in the same circumstances when compared to operation in the STANDARD mode. To help prevent accidents drive carefully, avoid careless or dangerous driving techniques and be especially careful when driving and cornering on slippery surfaces.**

NOTE:
In the SPORT mode or the SPORT+ mode (for NISMO AT models), fuel economy may be reduced.

For NISMO AT models, if the gear is shifted or the accelerator pedal is quickly operated when the Drive Mode Selector is used to select the SPORT mode or the SPORT+ mode and the engine warmed up, a sound effect is output to enhance the sense of sportiness. (See "Active noise cancellation/Active sound enhancement (if so equipped)" (P.296).)

BASIC INFORMATION

⚠ WARNING

Failure to follow the warnings and instructions for proper use of the LDW system could result in serious injury or death.

- **This system is only a warning device to inform the driver of a potential unintended lane departure. It will not steer the vehicle or prevent loss of control. It is the driver's responsibility to stay alert, drive safely, keep the vehicle in the traveling lane, and be in control of the vehicle at all times.**

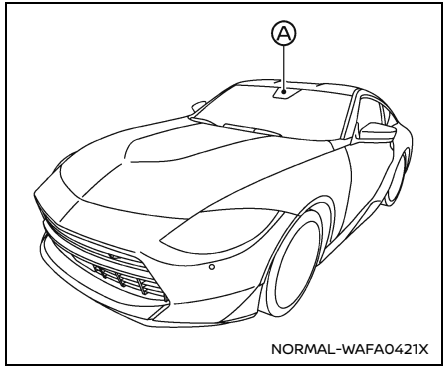

The LDW system will operate when the vehicle is driven at speeds of approximately 37 MPH (60 km/h) and above, and the lane markings are clearly visible on the road.

The LDW system monitors the lane markers on the traveling lane using the camera unit Ⓐ located above the inside mirror.

The LDW system warns the driver that the vehicle is beginning to leave the driving lane with an indicator and a sound. (See "LDW system operation" (P.217).)

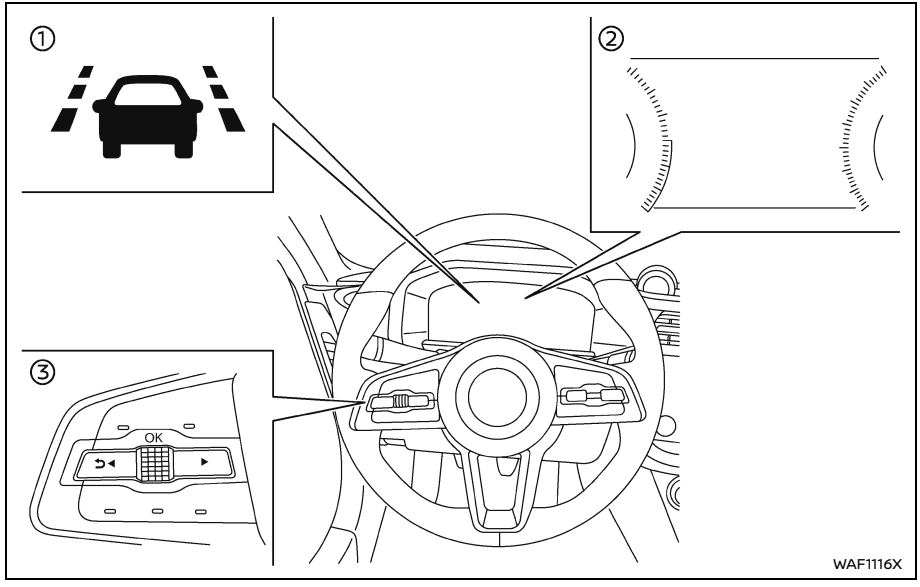

① LDW indicator
② Vehicle information display
③ Steering-wheel-mounted controls (left side)

LDW SYSTEM OPERATION

The LDW system provides a lane departure warning function when the vehicle is driven at speeds of approximately 37 MPH (60 km/h) and above and the lane markings are clear. When the vehicle approaches either the left or the right side of the traveling lane, a chime will sound and the LDW indicator on the vehicle information display will blink to alert the driver.

The warning function will stop when the vehicle returns inside of the lane markers.

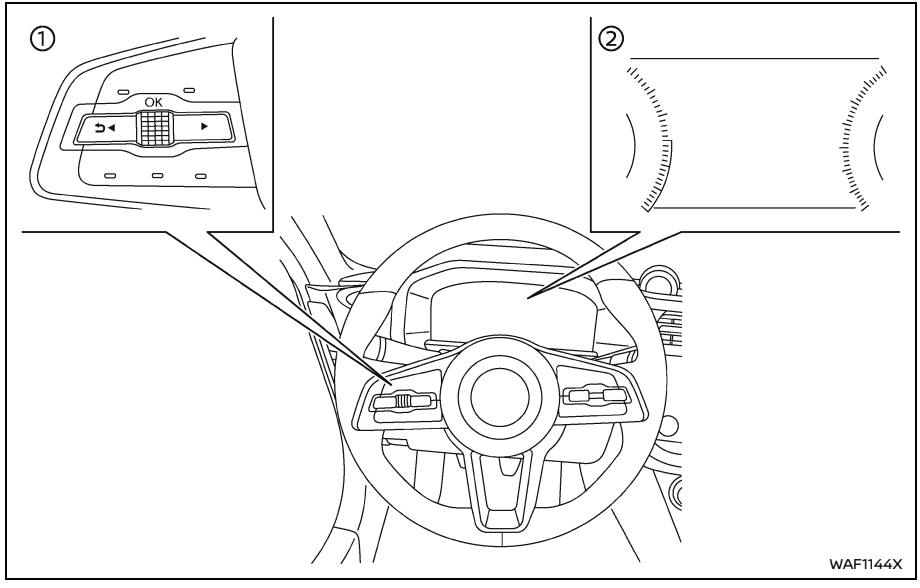

① Steering-wheel-mounted controls (left side)

② Vehicle information display

HOW TO ENABLE/DISABLE THE LDW SYSTEM

Perform the following steps to enable or disable the LDW system.

1. Push the ◀ ▶ button until "Settings" appears in the vehicle information display and then push the scroll dial. Use the scroll dial to select "Driver Assistance". Then push the scroll dial.
2. Select "Lane Assist" and push the scroll dial.

3. Select "Warning" and push the scroll dial.

NOTE:
The system will retain current settings in the vehicle information display even if the engine is restarted.

LDW SYSTEM LIMITATIONS

⚠ WARNING

Listed below are the system limitations for the LDW system. Failure to follow the warnings and instructions for proper use of the LDW system could result in serious injury or death.

- **The system will not operate at speeds below approximately 37 MPH (60 km/h) or if it cannot detect lane markers.**
- **Do not use the LDW system under the following conditions as it may not function properly:**
  - **During bad weather (rain, fog, snow, etc.).**
  - **When driving on slippery roads, such as on ice or snow.**
  - **When driving on winding or uneven roads.**
  - **When there is a lane closure due to road repairs.**
  - **When driving in a makeshift or temporary lane.**
  - **When driving on roads where the lane width is too narrow.**
  - **When driving without normal tire conditions (for example, tire wear, low tire pressure, tire chains, non-standard wheels).**
  - **When the vehicle is equipped with non-original brake parts or suspension parts.**
- **The system may not function properly under the following conditions:**
  - **On roads where there are multiple parallel lane markers; lane markers that are faded or not painted clearly; yellow painted lane markers; non-standard lane markers; or lane markers covered with water, dirt, snow, etc.**
  - **On roads where discontinued lane markers are still detectable.**
  - **On roads where there are sharp curves.**
  - **On roads where there are sharply contrasting objects, such as shadows, snow, water, wheel ruts, seams or lines remaining after road repairs. (The LDW system could detect these items as lane markers.)**
  - **On roads where the traveling lane merges or separates.**
  - **When the vehicle's traveling direction does not align with the lane marker.**
  - **When traveling close to the vehicle in front of you, which obstructs the lane camera unit detection range.**
  - **When rain, snow, dirt or object adheres to the windshield in front of the lane camera unit.**
  - **When the headlights are not bright due to dirt on the lens or if the aiming is not adjusted properly.**
  - **When strong light enters the lane camera unit. (For example, the light directly shines on the front of the vehicle at sunrise or sunset.)**

– When a sudden change in brightness occurs. (For example, when the vehicle enters or exits a tunnel or under a bridge.)

SYSTEM TEMPORARILY UNAVAILABLE

Condition A:

If the vehicle is parked in direct sunlight under high temperature conditions (over approximately 104°F (40°C)) and then started, the LDW system may be deactivated automatically, the LDW indicator will flash and the following message will appear in the vehicle information display.

- "Unavailable Camera Temperature High"

When the interior temperature is reduced, the LDW system will resume operating automatically.

Condition B:

The warning function of the LDW system is not designed to work under the following conditions:

- When you operate the lane change signal and change traveling lanes in the direction of the signal. (The LDW system will become operable again approximately 2 seconds after the lane change signal is turned off.)
- When the vehicle speed lowers to less than approximately 37 MPH (60 km/h).

Action to take:

After the above conditions have finished and the necessary operating conditions are satisfied, the LDW system will resume.

SYSTEM MALFUNCTION

If the LDW system malfunctions, it will cancel automatically, the LDW indicator will illuminate and "Malfunction See Owner's Manual" warning message will appear in the vehicle information display. If the warning message appears, pull off the road to a safe location and stop the vehicle. Place the ignition switch in the OFF position and restart the engine. If the warning message continues to appear, have the system checked. It is recommended that you visit a NISSAN dealer for this service.

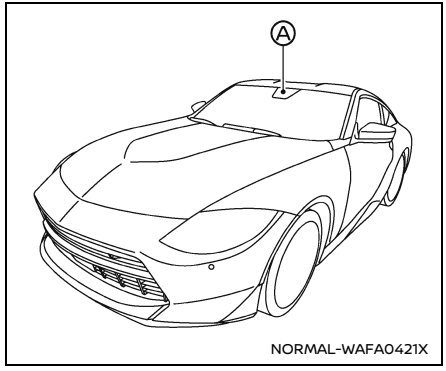

SYSTEM MAINTENANCE

The lane camera unit Ⓐ for the LDW system is located above the inside mirror.

To keep the proper operation of the LDW system and prevent a system malfunction, be sure to observe the following:

- Always keep the windshield clean.
- Do not attach a sticker (including transparent material) or install an accessory near the camera unit.
- Do not place reflective materials, such as white paper or a mirror, on the instrument panel. The reflection of sunlight may adversely affect the

camera unit's capability of detecting the lane markers.

- Do not strike or damage the areas around the camera unit. Do not touch the camera lens or remove the screw located on the camera unit. If the camera unit is damaged due to an accident, it is recommended that you visit a NISSAN dealer.

BASIC INFORMATION

⚠ WARNING

Failure to follow the warnings and instructions for proper use of the BSW system could result in serious injury or death.

- **The BSW system is not a replacement for proper driving procedure and is not designed to prevent contact with vehicles or objects. When changing lanes, always use the side and rear mirrors and turn and look in the direction your vehicle will move to ensure it is safe to change lanes. Never rely solely on the BSW system.**

The BSW system helps alert the driver of other vehicles in adjacent lanes when changing lanes.

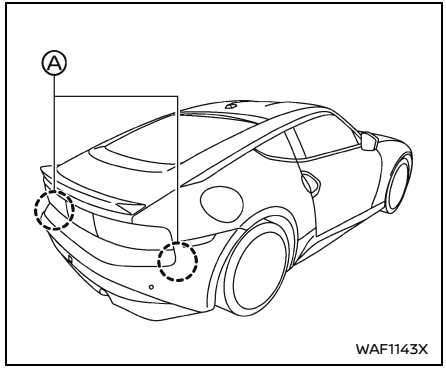

The BSW system uses radar sensors Ⓐ installed near the rear bumper to detect other vehicles in an adjacent lane.

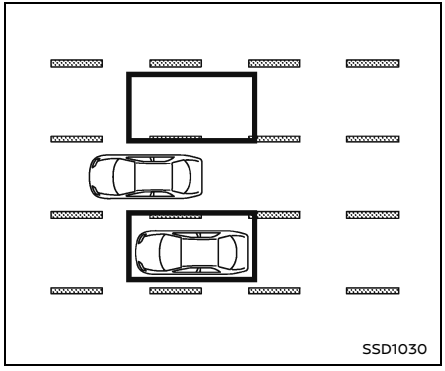

Detection zone

The radar sensors can detect vehicles on either side of your vehicle within the detection zone shown as illustrated. This detection zone starts from the outside mirror of your vehicle and extends approximately 10 ft (3.0 m) behind the rear bumper, and approximately 10 ft (3.0 m) sideways.

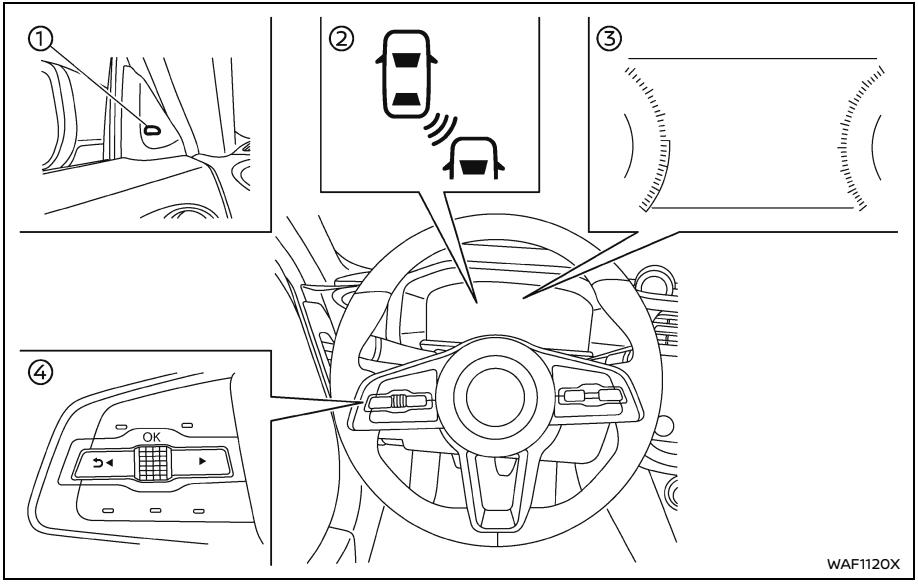

① Side indicator light
② BSW indicator
③ Vehicle information display
④ Steering-wheel-mounted controls (left side)

BSW SYSTEM OPERATION

The BSW system operates above approximately 20 MPH (32 km/h).

If the radar sensors detect a vehicle in the detection zone, the side indicator light illuminates. If the turn signal is then activated, the system chimes (twice), the side indicator light flashes, and the BSW indi-

cator blinks (yellow) in the vehicle information display. The side indicator light continues to flash until the detected vehicle leaves the detection zone.

The side indicator light illuminates for a few seconds when the ignition switch is placed in the ON position.

The brightness of the side indicator light is adjusted automatically depending on the brightness of the ambient light.

If a vehicle comes into the detection zone after the driver activates the turn signal, then the side indicator light and BSW indicator flashes and no chime sounds. For additional information, see "BSW driving situations" (P.225).

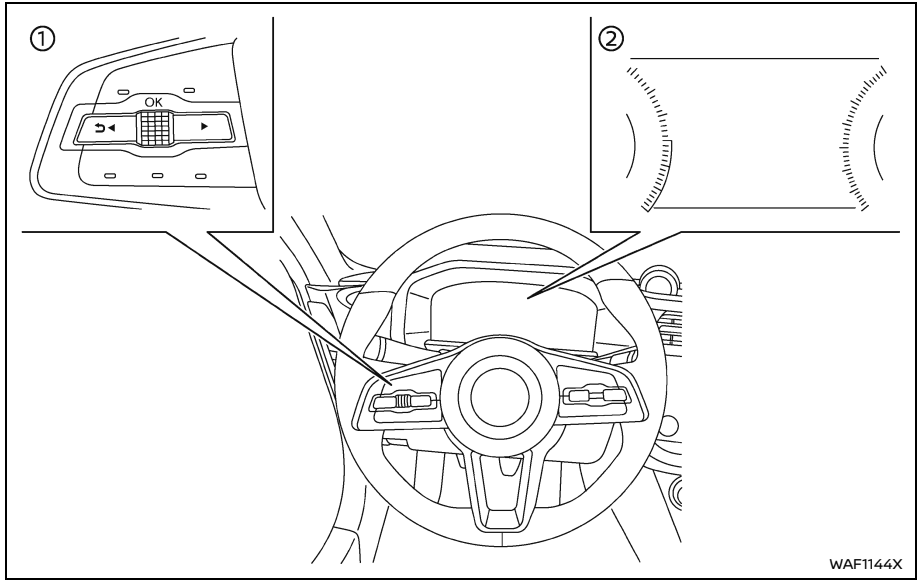

① Steering-wheel-mounted controls (left side)

② Vehicle information display

HOW TO ENABLE/DISABLE THE BSW SYSTEM

Basic information

Perform the following steps to enable or disable the BSW system.

1. Push the ◀ ▶ button until "Settings" appears in the vehicle information display and then push the scroll dial. Use the scroll dial to select "Driver Assistance". Then push the scroll dial.
2. Select "Blind Spot Assist" and push the scroll dial.
3. Select "Warning" and push the scroll dial.

NOTE:
The system will retain current settings in the vehicle information display even if the engine is restarted.

Setting the side indicator light brightness

The brightness of the side indicator lights can be changed using the following steps:

1. Push the ◀ ▶ button until "Settings" appears in the vehicle information display and then push the scroll dial. Use the scroll dial to select "Driver Assistance". Then push the scroll dial.
2. Select "Blind Spot Assist" and push the scroll dial.
3. Select "Indicator Brightness" and push the scroll dial.

BSW SYSTEM LIMITATIONS

⚠ WARNING

Listed below are the system limitations for the BSW system. Failure to operate the vehicle in accordance with these system limitations could result in serious injury or death.

- **The BSW system cannot detect all vehicles under all conditions.**
- **The radar sensors may not be able to detect and activate BSW when certain objects are present such as:**
  - **Pedestrians, bicycles, animals.**
  - **Vehicles such as motorcycles, low height vehicles, or high ground clearance vehicles.**
  - **Oncoming vehicles.**
  - **Vehicles remaining in the detection zone when you accelerate from a stop.**
  - **A vehicle merging into an adjacent lane at a speed approximately the same as your vehicle.**
  - **A vehicle approaching rapidly from behind.**
  - **A vehicle which your vehicle overtakes rapidly.**
  - **A vehicle that passes through the detection zone quickly.**
  - **When overtaking several vehicles in a row, the vehicles after the first vehicle may not be detected if they are traveling close together.**
- **The radar sensor's detection zone is designed based on a standard lane width. When driving in a wider lane, the radar sensors may not detect vehicles in an adjacent lane. When driving in a narrow lane, the radar sensors may detect vehicles driving two lanes away.**
- **The radar sensors are designed to ignore most stationary objects, however objects such as guardrails, walls, foliage and parked vehicles may occasionally be detected. This is a normal operation condition.**
- **The following conditions may reduce the ability of the radar to detect other vehicles:**
  - **Severe weather**
  - **Road spray**

– Ice/frost/dirt build-up on the vehicle

- **Do not attach stickers (including transparent material), install accessories or apply additional paint near the radar sensors. These conditions may reduce the ability of the radar to detect other vehicles.**
- **Excessive noise (for example, audio system volume, open vehicle window) will interfere with the chime sound, and it may not be heard.**

BSW DRIVING SITUATIONS

Basic information

Indicator on

Indicator off

Indicator flashing

NOTE:
The radar sensors may not detect vehicles which are approaching rapidly from behind.

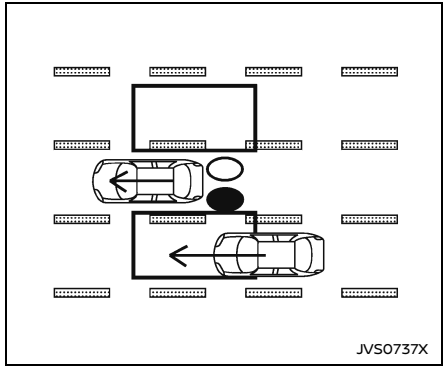

Illustration 1 – Approaching from behind

Another vehicle approaching from behind

Illustration 1: The side indicator light illuminates if a vehicle enters the detection zone from behind in an adjacent lane.

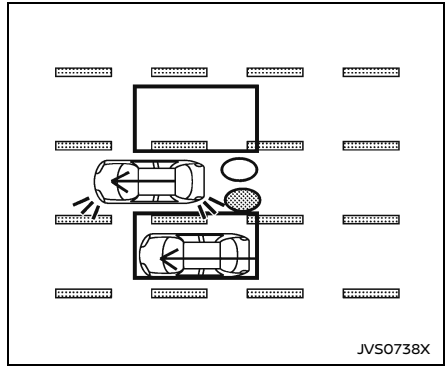

Illustration 2 – Approaching from behind

Illustration 2: If the driver activates the turn signal while another vehicle is in the detection zone, then the system chimes (twice) and the side indicator light and BSW indicator flash.

NOTE:

- **The radar sensors may not detect vehicles which are approaching rapidly from behind.**
- **If the driver activates the turn signal before a vehicle enters the detection zone, the side indicator light and BSW indicator will flash but no chime will sound when the other vehicle is detected.**

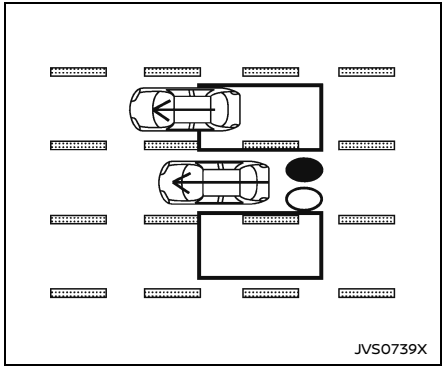

Illustration 3 – Overtaking another vehicle

Overtaking another vehicle

Illustration 3: The side indicator light illuminates if you overtake a vehicle and that vehicle stays in the detection zone for approximately 2 seconds.

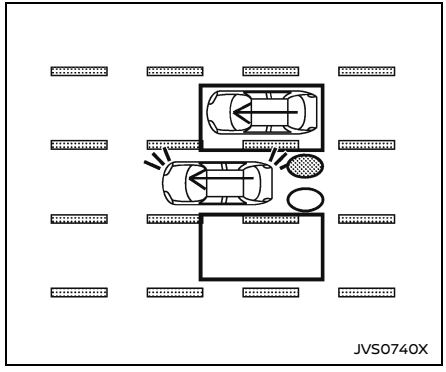

Illustration 4 – Overtaking another vehicle

Illustration 4: If the driver activates the turn signal while another vehicle is in the detection zone, then the system chimes (twice) and the side indicator light and BSW indicator flash.

NOTE:

- **When overtaking several vehicles in a row, the vehicles after the first vehicle may not be detected if they are traveling close together.**
- **The radar sensors may not detect slower moving vehicles if they are passed quickly.**
- **If the driver activates the turn signal before a vehicle enters the detection zone, the side indicator light and BSW indicator will flash but no chime will sound when the other vehicle is detected.**

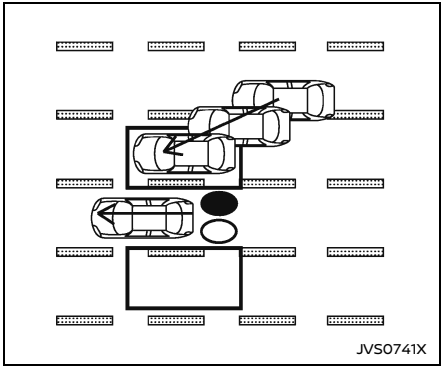

Illustration 5 – Entering from the side

Entering from the side

Illustration 5: The side indicator light illuminates if a vehicle enters the detection zone from either side.

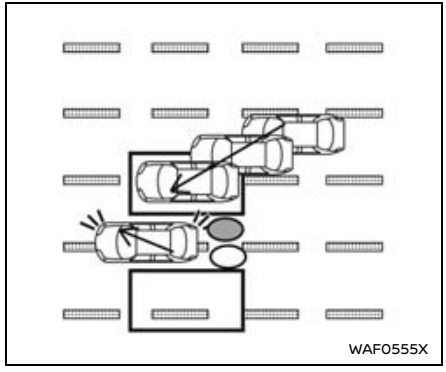

Illustration 6 – Entering from the side

Illustration 6: If the driver activates the turn signal while another vehicle is in the detection zone, then the system chimes (twice) and the side indicator light and BSW indicator flash.

NOTE:

- **If the driver activates the turn signal before a vehicle enters the detection zone, the side indicator light and BSW indicator will flash but no chime will sound when the other vehicle is detected.**
- **The radar sensors may not detect a vehicle which is traveling at about the same speed as your vehicle when it enters the detection zone.**

SYSTEM TEMPORARILY UNAVAILABLE

When radar blockage is detected, the BSW system will be turned off automatically, the BSW indicator will flash and the "Unavailable Side Radar Obstruction" warning message will appear in the vehicle information display.

The system is not available until the conditions no longer exist.

The radar sensors may be blocked by temporary ambient conditions such as splashing water, mist or fog. The blocked condition may also be caused by objects such as ice, frost or dirt obstructing the radar sensors.

NOTE:

If the BSW system stops working, the Rear Cross Traffic Alert (RCTA) system will also stop working.

Action to take:

When the above conditions no longer exist, the system will resume automatically.

SYSTEM MALFUNCTION

When the BSW system malfunctions, it will turn off automatically, the BSW indicator

will illuminate (yellow) in the vehicle information display and the "Malfunction See Owner's Manual" warning message will appear in the vehicle information display.

NOTE:
If the BSW system stops working, Rear Cross Traffic Alert (RCTA) system will also stop working.

Action to take:

Stop the vehicle in a safe location, turn the engine off and restart the engine. If the message continues to appear, have the BSW system checked. It is recommended that you visit a NISSAN dealer for this service.

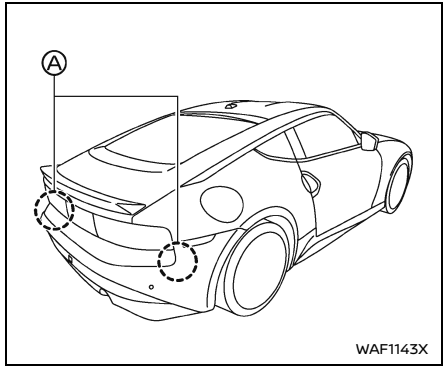

SYSTEM MAINTENANCE

Basic information

The two radar sensors Ⓐ for the BSW system are located near the rear bumper. Always keep the area near the radar sensors clean.

The radar sensors may be blocked by temporary ambient conditions such as splashing water, mist or fog.

The blocked condition may also be caused by objects such as ice, frost or dirt obstructing the radar sensors.

Check for and remove objects obstructing the area around the radar sensors.

Do not attach stickers (including transparent material), install accessories or apply additional paint near the radar sensors.

Do not strike or damage the area around the radar sensors.

See a NISSAN dealer or other authorized repair shop if the area around the radar sensors is damaged due to a collision.

Precautions on repairing the bumper

When repairing the bumper, take cautious because the radar sensors are installed on the bumper.

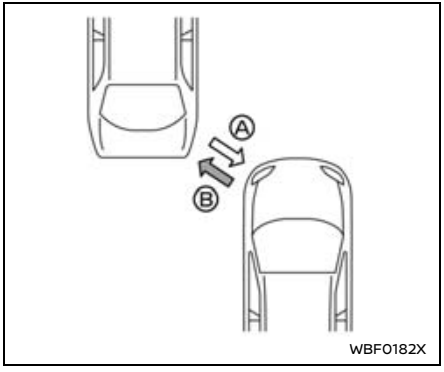

Ⓐ Radar signal
Ⓑ Reflected signal

Mechanism of the radar sensor:

The radar sensor detects objects by emitting a radar signal and then measuring its reflection.

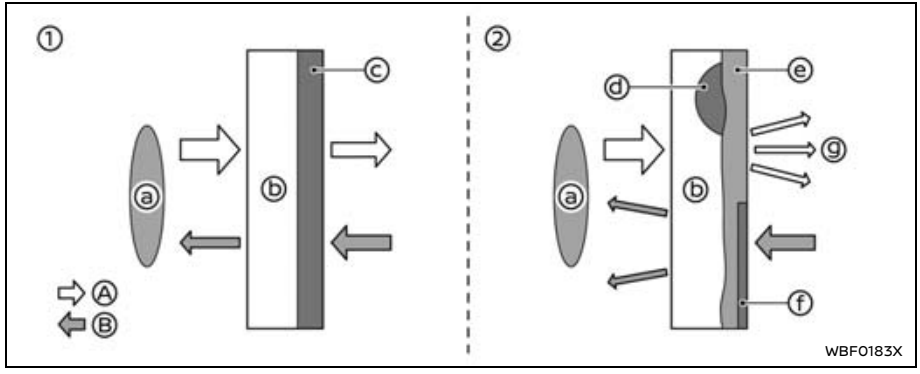

① Normal condition (before the repair)
② Poor condition (after the improper repair)
Ⓐ Radar signal
Ⓑ Reflected signal
ⓐ Radar sensor
ⓑ Vehicle bumper
ⓒ Film layer
ⓓ Putty
ⓔ Touch-up layer
ⓕ Repaint
ⓖ Radar signal diffusion

Repairing the bumper:

If an improper repair is performed on the bumper (for example, application of putty made from different materials, repaint, etc.), the radar signal could be weaken or prevented from functioning properly. This may cause the radar sensor not to detect objects correctly.

Radio frequency statement

NOTE:
FCC Notice:
For USA:
FCC ID: OAYSRR3B
This device complies with Part 15 of the FCC Rules. Operation is subject to the following two conditions: (1) This device may not cause harmful interference,

and (2) This device must accept any interference received, including interference that may cause undesired operation.

Radiofrequency radiation exposure information: This equipment complies with radiation exposure limits set forth for an uncontrolled environment. This equipment should be installed and operated with minimum distance of 20 cm between the radiator and the body of any persons, user or bystander.

FCC Notice:

Changes or modifications not expressly approved by the party responsible for compliance could void the user's authority to operate the equipment.

For Canada:

IC ID: 4135A-SRR3B

This device contains licence-exempt transmitter(s)/receiver(s) that comply with Innovation, Science and Economic Development Canada's licence-exempt RSS(s). Operation is subject to the following two conditions: 1. This device may not cause interference. 2. This device must accept any interference, including interference that may cause undesired operation of the device.

Radiofrequency radiation exposure information: This equipment complies with radiation exposure limits set forth for an uncontrolled environment. This equipment should be installed and operated with minimum distance of 20 cm between the radiator and the body of any persons, user or bystander.

"L'émetteur/récepteur exempt de licence contenu dans le présent appareil est conforme aux CNR d'Innovation, Sciences et Développement économique Canada applicables aux appareils radio exempts de licence. L'exploitation est autorisée aux deux conditions suivantes : 1. L'appareil ne doit pas produire de brouillage; 2. L'appareil doit accepter tout brouillage radioélectrique subi, même si le brouillage est susceptible d'en compromettre le fonctionnement. Cet équipement est conforme aux limites d'exposition aux rayonnements établies pour un environnement non contrôlé. Cet équipement doit être installé et utilisé avec un minimum de 20 cm de distance entre la source de rayonnement et votre corps.

BASIC INFORMATION

⚠ WARNING

Failure to follow the warnings and instructions for proper use of the ICC system could result in serious injury or death.

- **ICC is not a collision avoidance or warning device. For highway use only and it is not intended for congested areas or city driving. Failure to apply the brakes could result in an accident.**
- **Always observe posted speed limits and do not set the speed over them.**
- **Always drive carefully and attentively when using either cruise control mode. Read and understand the Owner's Manual thoroughly before using the cruise control. To avoid serious injury or death, do not rely on the system to prevent accidents or to control the vehicle's speed in emergency situations. Do not use cruise control except in appropriate road and traffic conditions.**

- **In the conventional (fixed speed) cruise control mode, a warning chime will not sound to warn you if you are too close to the vehicle ahead. Pay special attention to the distance between your vehicle and the vehicle ahead of you or a collision could occur.**

The ICC system maintains a selected distance from the vehicle in front of you within the speed range of 0 to 90 MPH (0 to 144 km/h) up to the set speed. The set speed can be selected by the driver between 20 to 90 MPH (30 to 144 km/h).

The vehicle travels at a set speed when the road ahead is clear.

The ICC system can be set to one of two cruise control modes.

- Vehicle-to-vehicle distance control mode:

  For maintaining a selected distance between your vehicle and the vehicle in front of you up to the preset speed.
- Conventional (fixed speed) cruise control mode:

  For cruising at a preset speed.

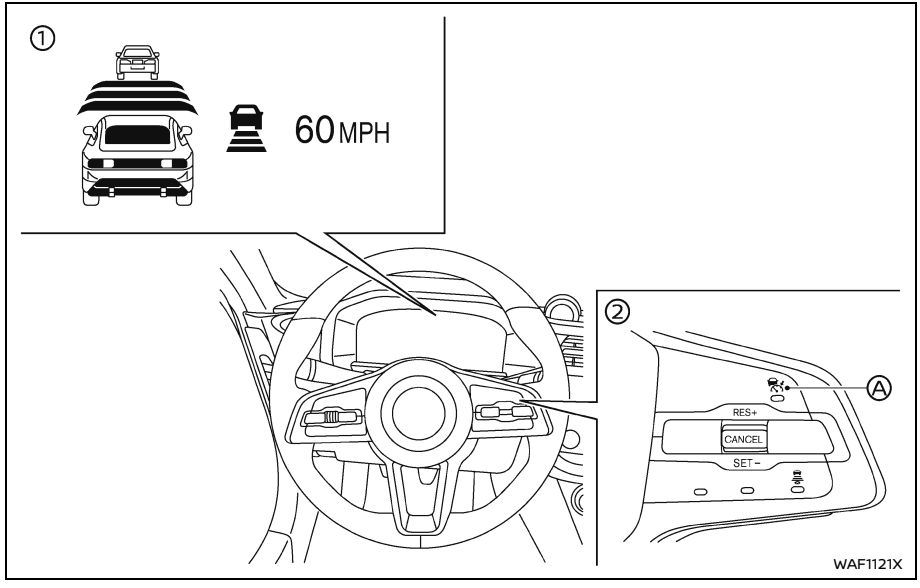

① Displays and indicators

② ICC switches

Ⓐ MAIN (ON·OFF) switch

Always confirm the setting in the ICC system display.

For the vehicle-to-vehicle distance control mode, see "Vehicle-to-vehicle distance control mode" (P.232).

For the conventional (fixed speed) cruise control mode, see "Conventional (fixed speed) cruise control mode" (P.246).

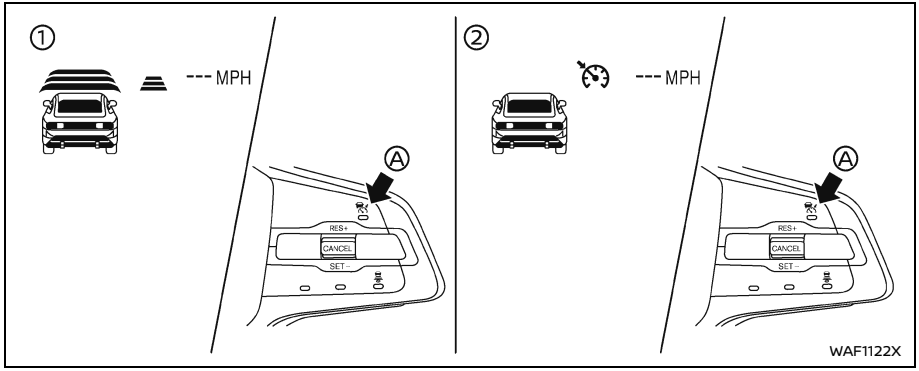

HOW TO SELECT THE CRUISE CONTROL MODE

Selecting the vehicle-to-vehicle distance control mode

To choose the vehicle-to-vehicle distance control mode ①, quickly push and release the MAIN switch Ⓐ.

Selecting the conventional (fixed speed) cruise control mode

To choose the conventional (fixed speed) cruise control mode ②, push and hold the MAIN switch Ⓐ for longer than approximately 1.5 seconds. See "Conventional (fixed speed) cruise control mode" (P.246).

VEHICLE-TO-VEHICLE DISTANCE CONTROL MODE

Basic information

In the vehicle-to-vehicle distance control mode, the ICC system automatically maintains a selected distance from the vehicle traveling in front of you according to that vehicle's speed (up to the set speed), or at the set speed when the road ahead is clear.

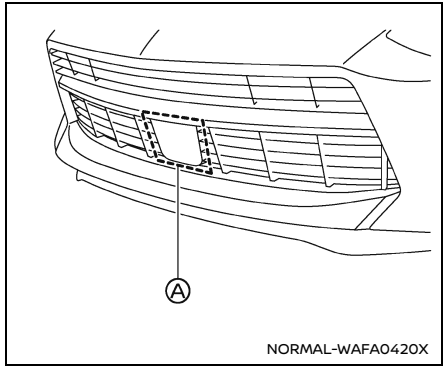

The system is intended to enhance the operation of the vehicle when following a vehicle traveling in the same lane and direction.

If the radar sensor Ⓐ detects a slower moving vehicle ahead, the system will reduce the vehicle speed so that your vehicle follows the vehicle in front at the selected distance.

The system automatically controls the throttle and applies the brakes (up to approximately 40% of vehicle braking power) if necessary.

The detection range of the sensor is approximately 650 ft (200 m) ahead.

Vehicle-to-vehicle distance control mode operation

The vehicle-to-vehicle distance control mode is designed to maintain a selected distance and reduce the speed to match the slower vehicle ahead; the system will decelerate the vehicle as necessary and if the vehicle ahead comes to a stop, the vehicle decelerates to a standstill. However, the ICC system can only apply up to approximately 40% of the vehicle's total braking power. This system should only be used when traffic conditions allow vehicle speeds to remain fairly constant or when vehicle speeds change gradually. If a vehicle moves into the traveling lane ahead or if a vehicle traveling ahead rapidly decelerates, the distance between vehicles may become closer because the ICC system cannot decelerate the vehicle quickly enough. If this occurs, the ICC system will sound a warning chime and blink the system display to notify the driver to take necessary action.

The system will cancel and a warning chime will sound if the speed is below approximately 15 MPH (24 km/h) and a vehicle is not detected ahead. The system will also disengage when the vehicle goes above the maximum set speed.

See "Approach warning" (P.239).

The following items are controlled in the vehicle-to-vehicle distance control mode:

- When there are no vehicles traveling ahead, the vehicle-to-vehicle distance control mode maintains the speed set by the driver. The set speed range is between approximately 20 and 90 MPH (30 and 144 km/h).
- When there is a vehicle traveling ahead, the vehicle-to-vehicle distance control mode adjusts the speed to maintain the distance, selected by driver, from the vehicle ahead. The adjusting speed range is up to the set speed. If the vehicle ahead comes to a stop, the vehicle decelerates to a standstill within the limitations of the system. The system will cancel once it judges a standstill with a warning chime.
- When the vehicle traveling ahead has moved out from its lane of travel, the vehicle-to-vehicle distance control mode accelerates and maintains vehicle speed up to the set speed.

The ICC system does not control vehicle speed or warn you when you approach stationary and slow moving vehicles. You must pay attention to vehicle operation to maintain proper distance from vehicles ahead when approaching toll gates or traffic congestion.

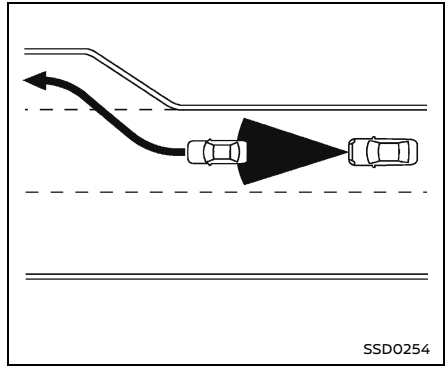

When driving on the freeway at a set speed and approaching a slower traveling vehicle ahead, the ICC system will adjust the speed to maintain the distance, selected by the driver, from the vehicle ahead. If the vehicle ahead changes lanes or exits the freeway, the ICC system will accelerate and maintain the speed up to the set speed. Pay attention to the driving operation to maintain control of the vehicle as it accelerates to the set speed.

The vehicle may not maintain the set speed on winding or hilly roads. If this occurs, you will have to manually control the vehicle speed.

Normally when controlling the distance to

a vehicle ahead, this system automatically accelerates or decelerates your vehicle according to the speed of the vehicle ahead. Depress the accelerator to properly accelerate your vehicle when acceleration is required for a lane change. Depress the brake pedal when deceleration is required to maintain a safe distance to the vehicle ahead due to its sudden braking or if a vehicle cuts in. Always stay alert when using the ICC system.

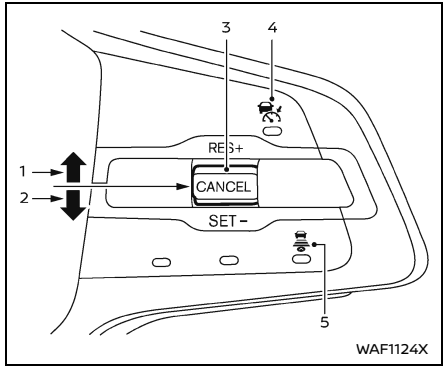

Vehicle-to-vehicle distance control mode switches

The system is operated by a MAIN switch and four control switches, all mounted on the steering wheel.

1. RES+ operation:
   Resumes set speed or increases speed incrementally.
2. SET- operation:
   Sets desired cruise speed, reduces speed incrementally.
3. CANCEL switch:
   Deactivates the system.
4. MAIN switch:
   Master switch to activate the system
5. DISTANCE switch:
   Changes the vehicle's following distance:
   - Long
   - Middle
   - Short

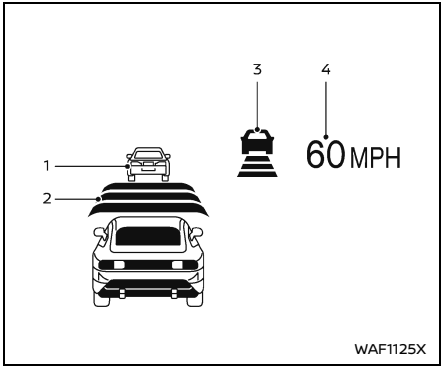

Vehicle-to-vehicle distance control mode display and indicators

The display is located in the vehicle information display.

1. Vehicle ahead detection indicator:
   Indicates whether it detects a vehicle in front of you (only when ICC is active).
2. Set distance indicator:
   Displays the selected distance between vehicles set with the DISTANCE switch.
3. This indicator indicates the ICC system status depending on a color.
   - Intelligent Cruise Control system ON indicator (gray):
     ICC standby.
   - Intelligent Cruise Control system ON indicator (green):
     Indicates that the ICC system is ON and active. Indicates that the cruising speed is set.
     - Green vehicle icon displayed: Vehicle detected ahead.
     - No vehicle icon shown: No vehicle detected ahead (Your vehicle maintains the driver-selected set speed)
   - Intelligent Cruise Control system ON indicator (yellow):
     Indicates that there is a malfunction in the ICC system.
4. Set vehicle speed indicator:
   Indicates the set vehicle speed.
   - Green: ICC active
   - Gray: ICC standby

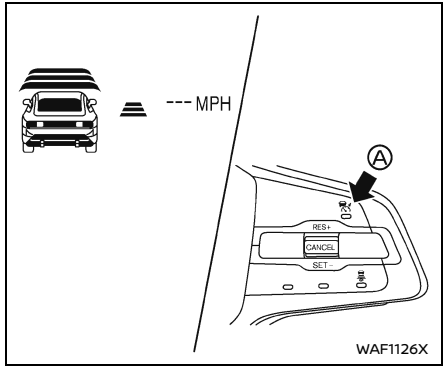

Operating vehicle-to-vehicle distance control mode

To turn on the cruise control, quickly push and release the MAIN switch Ⓐ on. The Intelligent Cruise Control (ICC) system ON indicator (gray), set distance indicator and set vehicle speed indicator come on and in a standby state for setting.

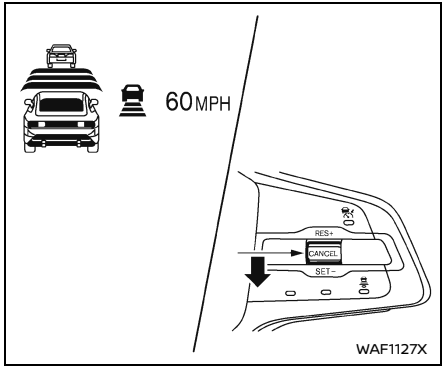

To set cruising speed, accelerate your vehicle to the desired speed, push down the CANCEL switch to the SET- direction and release it. (The ICC system set indicator (green), vehicle ahead detection indicator, set distance indicator and set vehicle speed indicator come on.) Take your foot off the accelerator pedal. Your vehicle will maintain the set speed.

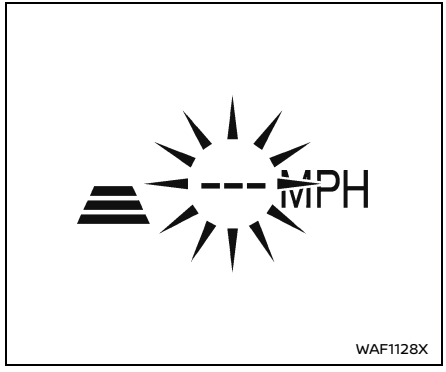

When the CANCEL switch is pushed to the SET- direction under the following conditions, the system cannot be set and the set vehicle speed indicator will blink for approximately 2 seconds:

- When traveling below 20 MPH (30 km/h) and the vehicle ahead is not detected
- When the shift lever is not in the D (Drive) or manual shift mode (Automatic Transmission models)
- when the shift lever is in the N (Neutral) position (Manual transmission models)
- When the parking brake is applied
- When the brakes are operated by the driver

When the CANCEL switch is pushed to the SET- direction under the following conditions, the system cannot be set.

The “Currently Unavailable” warning message appears in the vehicle information display.

- When the VDC system is off or the Traction mode is on (for NISMO models) (To use the ICC system, turn on the VDC system. Push the MAIN switch to turn off the ICC system and reset the ICC switch by pushing the MAIN switch again.)

  For details about the VDC system, see "Vehicle Dynamic Control (VDC) system" (P.291).

Under the following conditions, the chime will sound and the “Unavailable Slippery Road” warning message will appear in the vehicle information display.

- When the ABS or VDC (including the traction control system) operates
- When a tire slips

The “Forward Driving Aids temporarily disabled Front Sensor blocked See Owner's Manual” warning message appears in the vehicle information display.

- When the radar sensor area of the front bumper is covered with dirt or is obstructed

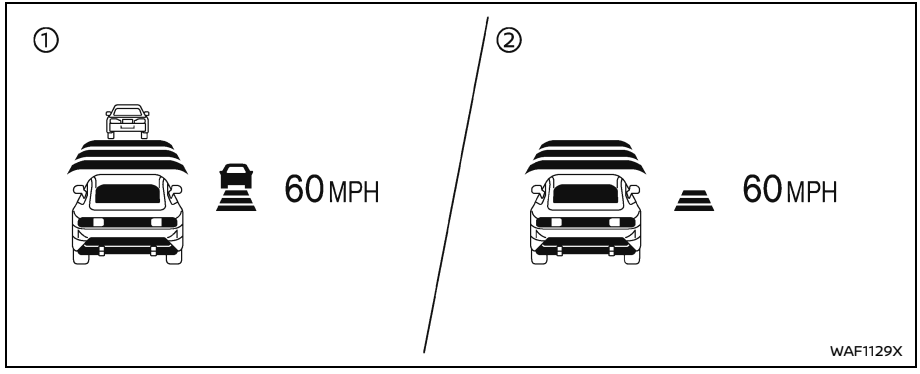

① System set display with vehicle ahead
② System set display without vehicle ahead

The driver sets the desired vehicle speed based on the road conditions. The ICC system maintains the set vehicle speed, similar to standard cruise control, as long as no vehicle is detected in the lane ahead.

The ICC system displays the set speed.

Vehicle detected ahead:

When a vehicle is detected in the lane ahead, the ICC system decelerates the vehicle by controlling the throttle and applying the brakes to match the speed of a slower vehicle ahead. The system then controls the vehicle speed based on the speed of the vehicle ahead to maintain the driver selected distance.

NOTE:

- **The stoplights of the vehicle come on when braking is performed by the ICC system.**
- **When the brake operates, a noise may be heard. This is not a malfunction.**

When a vehicle ahead is detected, the vehicle ahead detection indicator comes on. The ICC system will also display the set speed and selected distance.

Vehicle ahead not detected:

When a vehicle is no longer detected ahead, the ICC system gradually accelerates your vehicle to resume the previously set vehicle speed. The ICC system then maintains the set speed.

When a vehicle is no longer detected the vehicle ahead detection indicator turns off.

If a vehicle ahead appears during acceleration to the set vehicle speed or any time the ICC system is in operation, the system controls the distance to that vehicle.

When a vehicle is no longer detected under approximately 15 MPH (24 km/h), the system will be canceled.

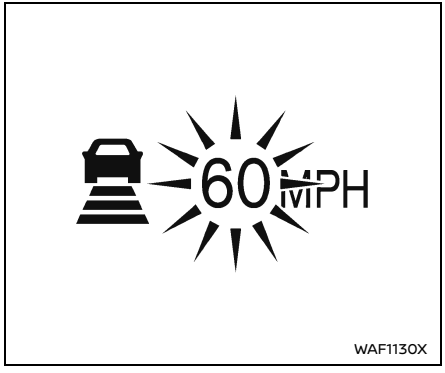

WAF1130X

When passing another vehicle, the set speed indicator will flash when the vehicle speed exceeds the set speed. The vehicle detect indicator will turn off when the area ahead of the vehicle is open. When the pedal is released, the vehicle will return to the previously set speed.

Even though your vehicle speed is set in the ICC system, you can depress the accelerator pedal when it is necessary to accelerate your vehicle rapidly.

How to change the set vehicle speed

To cancel the preset speed, use any of these methods:

- Push the CANCEL switch. The set vehicle speed indicator will turn gray.
- Tap the brake pedal. The set vehicle speed indicator will turn gray.
- Turn the MAIN switch off. Both the Intelligent Cruise Control system set indicator (green) and set vehicle speed indicator will go out.

To reset at a faster cruising speed, use one of the following methods:

- Depress the accelerator pedal. When the vehicle attains the desired speed, push down the CANCEL switch to the SET- direction and release it.
- Push up and hold the CANCEL switch to the RES+ direction. The set vehicle speed will increase by approximately 5 MPH (5 km/h for Canada).
- Push up the CANCEL switch to the RES+ direction, then quickly release it. Each time you do this, the set speed will increase by approximately 1 MPH (1 km/h for Canada).

To reset at a slower cruising speed, use one of the following methods:

- Lightly tap the brake pedal. When the vehicle attains the desired speed, push down the CANCEL switch to the SET- direction and release it.
- Push down and hold the CANCEL switch to the SET- direction. The set vehicle speed will decrease by approximately 5 MPH (5 km/h for Canada).
- Push down the CANCEL switch to the SET- direction, then quickly release it. Each time you do this, the set speed will decrease by approximately 1 MPH (1 km/h for Canada).

To resume the preset speed, push up the CANCEL switch to the RES+ direction and release it. The vehicle will resume the last set cruising speed when the vehicle speed is over 20 MPH (30 km/h).

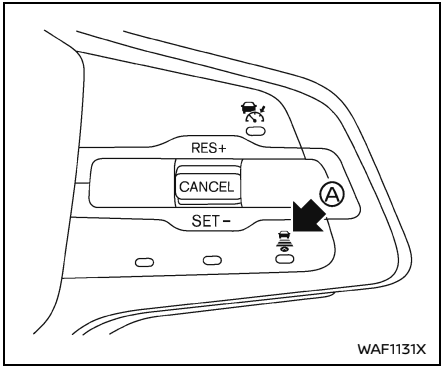

WAF1131X

How to change the set distance to the vehicle ahead

The distance to the vehicle ahead can be selected at any time of the ICC Standby or the ICC is active depending on the traffic conditions.

Each time the DISTANCE switch Ⓐ is pushed, the set distance will change to long, middle, short and back to long again in that sequence.

Distance	Display	Approximate distance at 60 MPH (100 km/h) [ft (m)]
Long	60 MPH	200 (60)
Middle	60 MPH	150 (45)
Short	60 MPH	90 (30)

WAF1132X

- The distance to the vehicle ahead will change according to the vehicle speed. The higher the vehicle speed, the longer the distance.
- The distance setting will remain at the current setting even if the engine is restarted.

Approach warning

If your vehicle comes closer to the vehicle ahead due to rapid deceleration of that vehicle or if another vehicle cuts in, the system warns the driver with the chime and ICC system display. Decelerate by depressing the brake pedal to maintain a safe vehicle distance if:

- The chime sounds.
- The vehicle ahead detection indicator blinks.

The warning chime may not sound in some cases when there is a short distance between vehicles. Some examples are:

- When the vehicles are traveling at the same speed and the distance between vehicles is not changing
- When the vehicle ahead is traveling faster and the distance between vehicles is increasing
- When a vehicle cuts in near your vehicle

The warning chime will not sound when:

- Your vehicle approaches other vehicles that are parked or moving slowly.
- The accelerator pedal is depressed, overriding the system.

NOTE:
The approach warning chime may sound and the system display may blink when the radar sensor detects objects on the side of the vehicle or on the side of the road. This may cause the ICC system to decelerate or accelerate the vehicle. The radar sensor may detect these objects when the vehicle is driven on winding roads, narrow roads, hilly roads or when entering or exiting a curve. In these cases you will have to manually control the proper distance ahead of your vehicle.

Also, the sensor sensitivity can be affected by vehicle operation (steering maneuver or driving position in the lane) or traffic or vehicle condition (for example, if a vehicle is being driven with some damage).

Automatic cancellation

A chime sounds under the following conditions and the control is automatically canceled.

- When the vehicle ahead is not detected and your vehicle is traveling below the speed of 15 MPH (24 km/h)
- When the system judges the vehicle is at standstill
- When the shift lever is not in the D position or Manual shift mode (Automatic transmission models)
- When the shift lever is in the N (Neutral) position (Manual transmission models)
- When the parking brake is applied
- When the VDC system is turned off
- When the Traction mode is selected (NISMO models)
- When ABS or VDC (including the traction control system) operates
- When distance measurement becomes impaired due to adhesion of dirt or obstruction to the sensor
- When a wheel slips
- When the radar signal is temporarily interrupted
- When the clutch pedal is depressed

Vehicle-to-vehicle distance control mode limitations

⚠ WARNING

Listed below are the system limitations for the ICC system. Failure to operate the vehicle in accordance with these system limitations could result in serious injury or death.

- **The system is primarily intended for use on straight, dry, open roads with light traffic. It is not advisable to use the system in city traffic or congested areas.**

- **This system will not adapt automatically to road conditions. This system should be used in evenly flowing traffic. Do not use the system on roads with sharp curves, or on icy roads, in heavy rain or in fog.**
- **As there is a performance limit to the distance control function, never rely solely on the ICC system. This system does not correct careless, inattentive or absent-minded driving, or overcome poor visibility in rain, fog, or other bad weather. Decelerate the vehicle speed by depressing the brake pedal, depending on the distance to the vehicle ahead and the surrounding circumstances in order to maintain a safe distance between vehicles.**
- **If the vehicle ahead comes to a stop, the vehicle decelerates to a standstill within the limitations of the system. The system will cancel once it judges that the vehicle has come to a standstill and sound a warning chime. To prevent the vehicle from moving, the driver must depress the brake pedal.**
- **Always pay attention to the operation of the vehicle and be ready to manually control the proper following distance. The vehicle-to-vehicle distance control mode of the ICC system may not be able to maintain the selected distance between vehicles (following distance) or selected vehicle speed under some circumstances.**
- **The system may not detect the vehicle in front of you in certain road or weather conditions. To avoid accidents, never use the ICC system under the following conditions:**
  - **On roads where the traffic is heavy or there are sharp curves**
  - **On slippery road surfaces such as on ice or snow, etc.**
  - **During bad weather (rain, fog, snow, etc.)**
  - **When rain, snow or dirt adhere to the system sensor**
  - **On steep downhill roads (the vehicle may go beyond the set vehicle speed and frequent braking may result in overheating the brakes)**
  - **On repeated uphill and downhill roads**
  - **When traffic conditions make it difficult to keep a proper distance between vehicles because of frequent acceleration or deceleration**
- **In some road or traffic conditions, a vehicle or object can unexpectedly come into the sensor detection zone and cause automatic braking. You may need to control the distance from other vehicles using the accelerator pedal. Always stay alert and avoid using the ICC system when it is not recommended in this section.**

The radar sensor will not detect the following objects:

- Stationary and slow moving vehicles
- Pedestrians or objects in the roadway
- Oncoming vehicles in the same lane
- Motorcycles traveling offset in the travel lane

The sensor generally detects the signals returned from the vehicle ahead. Therefore, if the sensor cannot detect the reflection from the vehicle ahead, the ICC system may not maintain the selected

distance.

The following are some conditions in which the sensor cannot detect the signals:

- When the snow or road spray from traveling vehicles reduces the sensor's visibility
- When excessively heavy baggage is loaded in the cargo area of your vehicle

The ICC system is designed to automatically check the sensor's operation within the limitation of the system. When the sensor is covered with dirt or is obstructed, the system will automatically be canceled. If the sensor is covered with ice, a transparent or translucent vinyl bag, etc., the ICC system may not detect them. In these instances, the vehicle-to-vehicle distance control mode may not cancel and may not be able to maintain the selected following distance from the vehicle ahead. Be sure to check and clean the sensor regularly.

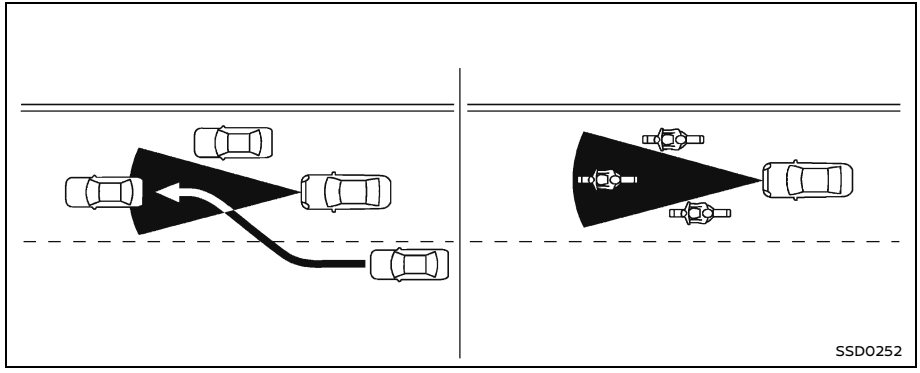

The detection zone of the radar sensor is limited. A vehicle ahead must be in the detection zone for the vehicle-to-vehicle distance detection mode to maintain the selected distance from the vehicle ahead.

A vehicle ahead may move outside of the detection zone due to its position within the same lane of travel. Motorcycles may not be detected in the same lane ahead if they are traveling offset from the centerline of the lane. A vehicle that is entering the lane ahead may not be detected until the vehicle has completely moved into the lane. **If this occurs, the ICC system may warn you by blinking the system indicator and sounding the chime. The driver may have to manually control the proper distance away from vehicle traveling ahead.**

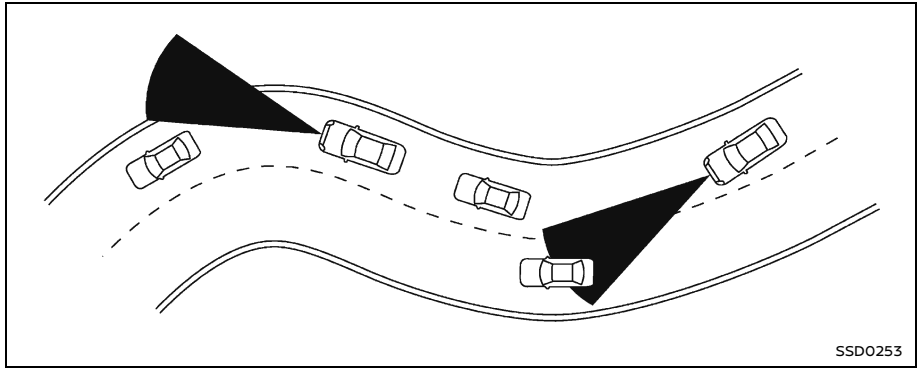

When driving on some roads, such as winding, hilly, curved, narrow roads, or roads which are under construction, the radar sensor may detect vehicles in a different lane, or may temporarily not detect a vehicle traveling ahead. This may cause the ICC system to decelerate or accelerate the vehicle.

The detection of vehicles may also be affected by vehicle operation (steering maneuver or traveling position in the lane, etc.) or vehicle condition. **If this occurs, the ICC system may warn you by blinking the system indicator and sounding the chime unexpectedly. You will have to manually control the proper distance away from the vehicle traveling ahead.**

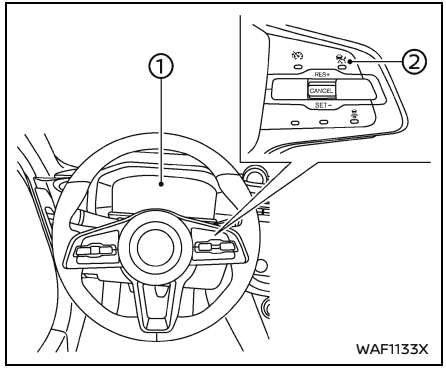

System temporarily unavailable

① Vehicle information display

② MAIN switch

Condition A:

Under the following conditions, the ICC system is automatically canceled. A chime will sound and the system will not be able to be set:

- When the vehicle speed fails below approximately 20 MPH (30 km/h)
- When the parking brake is applied
- When the clutch pedal is depressed (Manual transmission models)

- When the transmission is not in the D (drive) or manual shift mode (Automatic transmission models)
- When the shift lever is in the N (Neutral) position (Manual transmission models)
- When the radar sensor area of the front bumper is covered with dirt or is obstructed

Action to take:

When the conditions listed above are no longer present, turn the ICC system back on to use the system.

Condition B:

Under the following conditions, the ICC system is automatically canceled. The chime will sound and the "Currently Unavailable" warning message will appear in the vehicle information display.

- When the VDC is turned off
- When the Traction mode is selected (NISMO models)

Action to take:

When the conditions listed above are no longer present, turn the ICC system back on to use the system.

Condition C:

Under the following conditions, the chime will sound and the "Unavailable Slippery Road" warning message will appear in the vehicle information display.

- When the ABS or VDC (including the traction control system) operates
- When a tire slips

Action to take:

When the conditions listed above are no longer present, turn the ICC system back on to use the system.

Condition D:

The chime will sound and the "Forward Driving Aids temporarily disabled Front Sensor blocked See Owner's Manual" warning message will appear in the vehicle information display.

- When the radar sensor area is covered with dirt or is obstructed, making it impossible to detect a vehicle ahead, the ICC system is automatically canceled.

Action to take:

If the warning message appears, park the vehicle in a safe place and turn the engine off. When the radar signal is temporarily interrupted, clean the sensor area and restart the engine. If the "Forward Driving Aids temporarily disabled Front Sensor blocked See Owner's Manual" warning message continues to be displayed, have the ICC system checked by a NISSAN dealer.

- When driving on roads with limited road structures or buildings (for example, long bridges, deserts, snow fields, driving next to long walls), the system may illuminate the ICC system warning (yellow) and display the "Forward Driving Aids temporarily disabled Front Sensor blocked See Owner's Manual" message.

Action to take:

When the conditions listed above are no longer present, turn the ICC system back on to use the system.

Condition E:

When the ICC system is not operating properly, the chime sounds and the ICC system warning (orange) will appear and the "Malfunction See Owner's Manual" warning message will appear in the vehicle information display.

Action to take:

If the warning appears, stop the vehicle in a safe place and place the shift position in the P (Park) position (Automatic Transmission models) or the shift lever in the N (Neutral) position (Manual Transmission models). Turn the engine off, restart the engine, resume driving and set the ICC system again.

If it is not possible to set the system or

the warning stays on, it may indicate that the ICC system is malfunctioning. Although the vehicle is still driveable under normal conditions, have the vehicle checked. It is recommended you visit a NISSAN dealer for this service.

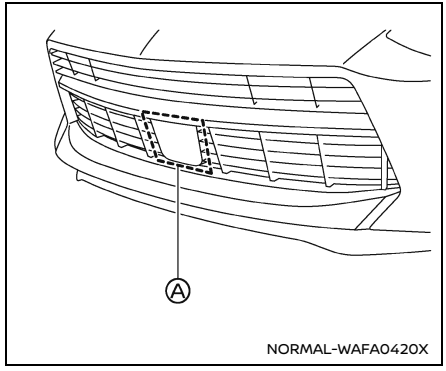

System maintenance

The sensor for the ICC system Ⓐ is located behind the lower grille of the front bumper.

To keep the ICC system operating properly, be sure to observe the following:

- Always keep the sensor area of the front bumper clean.
- Do not strike or damage the areas around the sensor.
- Do not cover or attach stickers or similar objects on the front bumper near the sensor area. This could cause failure or malfunction.
- Do not attach metallic objects near the sensor area (brush guard, etc.). This could cause failure or malfunction.
- Do not alter, remove or paint the front bumper. It is recommended you contact a NISSAN dealer before customizing or restoring the front bumper.

Radio frequency statement

NOTE:
FCC Notice:
For USA:
Advanced Radar Sensor, ARS4-B
FCC ID: OAYARS4B

Radiofrequency radiation exposure information: This equipment complies with radiation exposure limits set forth for an uncontrolled environment. This equipment should be installed and operated with minimum distance of 20 cm between the radiator and the body of any persons, user or bystander. This transmitter must not be co-located or operating in conjunction with any other antenna or transmitter.

US FCC Notice:

Changes or modifications not expressly approved by the party responsible for compliance could void the user's authority to operate the equipment.

For Canada:

IC: 4135A-ARS4B

This device complies with Industry Canada license-exempt RSS standard(s). Operation is subject to the following two conditions: (1) This device may not cause harmful interference, and (2) This device must accept any interference received, including interference that may cause undesired operation.

Le présent appareil est conforme aux CNR d'Industrie Canada applicables aux appareils radio exempts de licence. L'exploitation est autorisée aux deux conditions suivantes : (1) l'appareil ne doit pas produire de brouillage, et (2) l'utilisateur de l'appareil doit accepter tout brouillage radioélectrique subi, même si le brouillage est susceptible d'en compromettre le fonctionnement.

Radiofrequency radiation exposure Information: This equipment complies with IC radiation exposure limits set forth for an uncontrolled environment. This equipment should be installed and operated with minimum distance of 20 cm between the radiator and your body. This transmitter must not be co-located or operating in conjunction with any other antenna or transmitter.

Informations sur l'exposition aux rayonnements radiofréquences : Cet équipement est conforme aux limites d'exposition aux rayonnements IC établies pour un environnement non contrôlé. Cet équipement doit être installé et utilisé avec un minimum de 20 cm de distance entre la source de rayonnement et votre corps. Cet émetteur ne doit pas être localisé où fonctionner en conjonction avec une autre antenne ou un autre émetteur.

CONVENTIONAL (fixed speed) CRUISE CONTROL MODE

Basic information

This mode allows driving at a speed between 25 to 90 MPH (40 to 144 km/h) without keeping your foot on the accelerator pedal.

⚠ WARNING

- **In the conventional (fixed speed) cruise control mode, a warning chime does not sound to warn you if you are too close to the vehicle ahead, as neither the presence of the vehicle ahead nor the vehicle-to-vehicle distance is detected.**
- **Pay special attention to the distance between your vehicle and the vehicle ahead of you or a collision could occur.**
- **Always confirm the setting in the ICC system display.**
- **Do not use the conventional (fixed speed) cruise control mode when driving under the following conditions:**
  - **when it is not possible to keep the vehicle at a set speed**
  - **in heavy traffic or in traffic that varies in speed**
  - **on winding or hilly roads**
  - **on slippery roads (rain, snow, ice, etc.)**
  - **in very windy areas**
- **Doing so could cause a loss of vehicle control and result in an accident.**

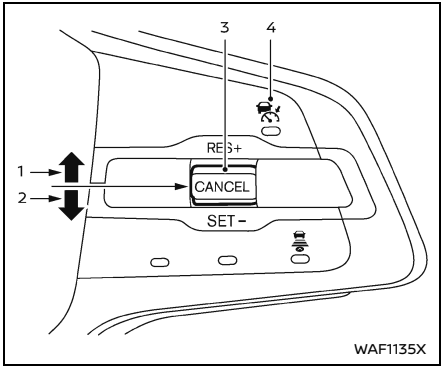

Conventional (fixed speed) cruise control switches

1. RES+ operation:
   Resumes set speed or increases speed incrementally.
2. SET- operation:
   Sets the desired cruise speed, reduces speed incrementally.
3. CANCEL switch:
   Deactivates the system.
4. MAIN switch:
   Master switch to activate the system.

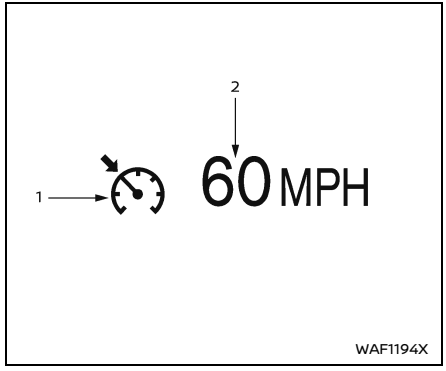

Conventional (fixed speed) cruise control mode display and indicators

The display is located in the vehicle information display.

1. Cruise indicator:
   This indicator indicates the condition of ICC system depending on a color.
   - Cruise control ON indicator (white):
     Indicates that the MAIN switch is ON.
   - Cruise control set indicator (green):
     Displays while the vehicle speed is controlled by the conventional (fixed speed) cruise control mode of the ICC system.
   - Cruise control system warning (orange):
     Indicates that there is a malfunction in the ICC system.
2. Set vehicle speed indicator:
   This indicator indicates the set vehicle speed.
   For Canadian models, the speed is displayed in km/h.

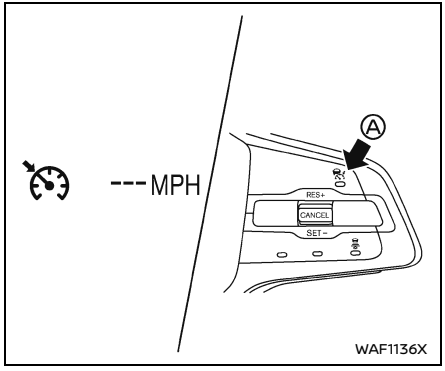

Operating conventional (fixed speed) cruise control mode

To turn on the conventional (fixed speed) cruise control mode, push and hold the MAIN switch Ⓐ for longer than about 1.5 seconds.

When pushing the MAIN switch on, the conventional (fixed speed) cruise control mode display and indicators are displayed in the vehicle information display. After you hold the MAIN switch on for longer than about 1.5 seconds, the ICC system display turns off. The cruise indicator appears. You can now set your desired cruising speed. Pushing the MAIN switch again will turn the system completely off.

When the ignition switch is placed in the OFF position, the system is also automatically turned off.

To use the ICC system again, quickly push and release the MAIN switch (vehicle-to-vehicle distance control mode) or push and hold it (conventional cruise control mode) again to turn it on.

⚠ CAUTION

To avoid accidentally engaging cruise control, make sure to turn the MAIN switch off when not using the ICC system.

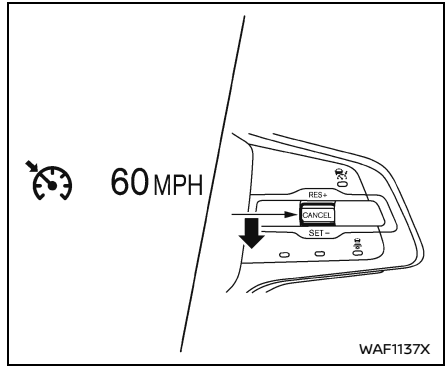

To set cruising speed, accelerate your vehicle to the desired speed, push down the CANCEL switch to the SET- direction and release it. (The color of the cruise indicator changes to green and set vehicle speed indicator comes on.) Take your foot off the accelerator pedal. Your vehicle will maintain the set speed.

- **To pass another vehicle,** depress the accelerator pedal. When you release the pedal, the vehicle will return to the previously set speed.
- The vehicle may not maintain the set speed when going up or down steep hills. If this happens, manually maintain vehicle speed.

To cancel the preset speed, use any of the following methods:

1. Push the CANCEL switch. The vehicle speed indicator will turn gray.
2. Tap the brake pedal. The vehicle speed indicator will turn gray.
3. Turn the MAIN switch off. Both the cruise indicator and vehicle speed indicator will turn off.

To reset at a faster cruising speed, use one of the following three methods:

1. Depress the accelerator pedal. When the vehicle attains the desired speed, push down the CANCEL switch to the SET- direction and release it.
2. Push up and hold the CANCEL switch to the RES+ direction. When the vehicle attains the desired speed, release the switch.
3. Push up the CANCEL switch to the RES+ direction, then quickly release it. Each time you do this, the set speed will increase by about 1 MPH (1.6 km/h).

To reset at a slower cruising speed, use one of the following three methods:

1. Lightly tap the brake pedal. When the vehicle attains the desired speed, push down the CANCEL switch to the SET- direction and release it.
2. Push down and hold the CANCEL switch to the SET- direction. Release the switch when the vehicle slows down to the desired speed.
3. Push down the CANCEL switch to the SET- direction, then quickly release it. Each time you do this, the set speed will decrease by about 1 MPH (1.6 km/h).

To resume the preset speed, push up the CANCEL switch to the RES+ direction and release it. The vehicle will resume the last set cruising speed when the vehicle speed is over 25 MPH (40 km/h).

System temporarily unavailable

A chime sounds under the following conditions and the control is automatically canceled.

- When the vehicle slows down more than 8 MPH (13 km/h) below the set speed
- When the shift lever is not in the D (Drive) or manual shift mode (Automatic transmission models)
- When the shift lever is in the N (Neutral) position (Manual transmission models)
- When the parking brake is applied.
- When the VDC operates (including the traction control system)
- When a wheel slips
- When the VDC system is turned off
- When the Traction mode is selected (NISMO models)
- When the clutch pedal is depressed (Manual transmission models)

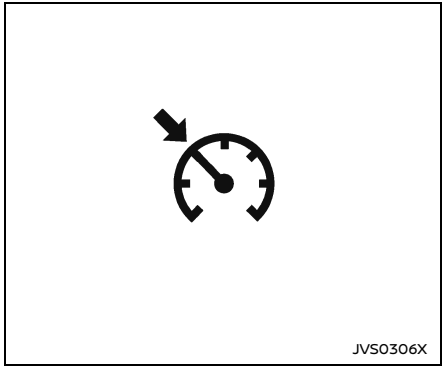

Warning

When the system is not operating properly, the chime sounds and the color of the cruise indicator will change to orange.

Action to take:

If the color of the cruise indicator changes to orange, stop the vehicle in a safe place and place the shift position in the P (Park) position (Automatic Transmission models) or the shift lever in the N (Neutral) position (Manual Transmission models). Turn the engine off, restart the engine, resume driving and then perform the setting again.

If it is not possible to set or the indicator stays on, it may indicate that the system is malfunctioning. Although the vehicle is still driveable under normal conditions, have the vehicle checked. It is recommended you visit a NISSAN dealer for this service.

AUTOMATIC EMERGENCY BRAKING (AEB) WITH PEDESTRIAN DETECTION SYSTEM

BASIC INFORMATION

⚠ WARNING

Failure to follow the warnings and instructions for proper use of the AEB with Pedestrian Detection system could result in serious injury or death.

- **The AEB with Pedestrian Detection system is a supplemental aid to the driver. It is not a replacement for the driver's attention to traffic conditions or responsibility to drive safely. It cannot prevent accidents due to carelessness or dangerous driving techniques.**
- **The AEB with Pedestrian Detection system does not function in all driving, traffic, weather and road conditions.**

The AEB with Pedestrian Detection system can assist the driver when there is a risk of a forward collision with

- a vehicle ahead in the travelling lane
- a pedestrian ahead in the travelling lane

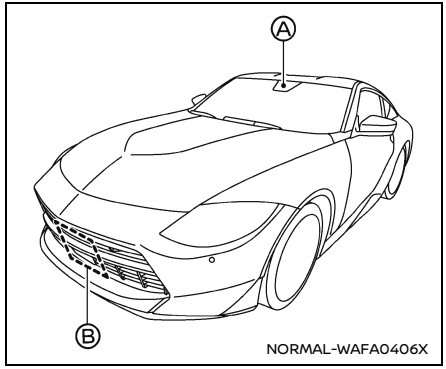

The AEB with Pedestrian Detection system uses a radar sensor Ⓑ located on the front of the vehicle to measure the distance to the vehicle ahead in the same lane.

For pedestrians, the AEB with Pedestrian Detection system uses a camera Ⓐ installed behind the windshield in addition to the radar sensor.

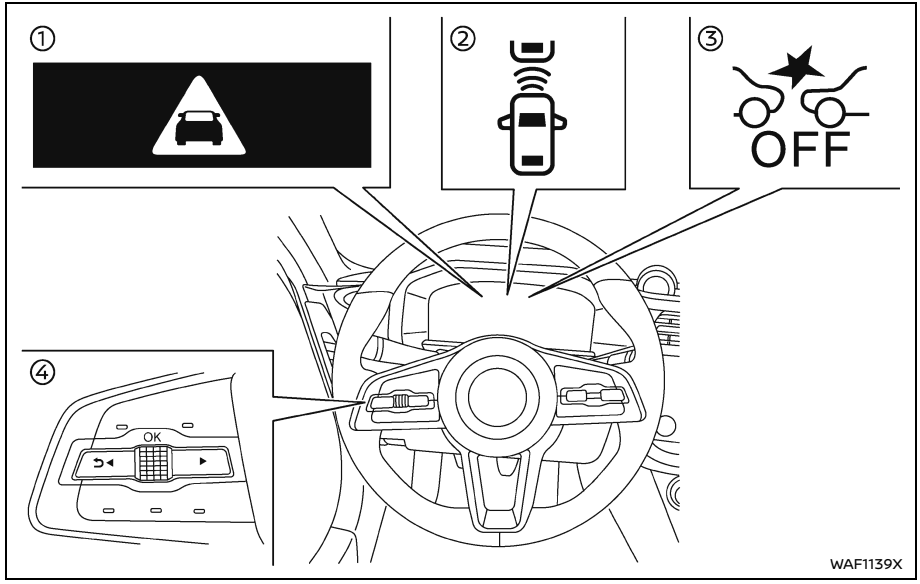

① AEB emergency warning indicator
② Vehicle ahead detection indicator
③ AEB system OFF warning light
④ Steering-wheel-mounted controls (left side)

AEB WITH PEDESTRIAN DETECTION SYSTEM OPERATION

The AEB with Pedestrian Detection system will function when your vehicle is driven at speeds above approximately 3 MPH (5 km/h).

For the Pedestrian Detection function, the

AEB with Pedestrian Detection system operates at speeds between 6 – 37 MPH (10 – 60 km/h).

If a risk of a forward collision is detected, the AEB with Pedestrian Detection system will firstly provide the warning to the driver by flashing the vehicle ahead detection indicator (yellow) in the vehicle information display and providing an audible alert. In addition, the system applies partial braking.

If the driver applies the brakes quickly and forcefully after the warning, and the AEB with Pedestrian Detection system detects that there is still the possibility of a forward collision, the system will automatically increase the braking force.

If the driver does not take action, the AEB with Pedestrian Detection system issues the second visual (flashing) (red and white) and audible warning. If the driver releases the accelerator pedal, then the system applies partial braking.

If the risk of a collision becomes imminent, the AEB with Pedestrian Detection system applies harder braking automatically.

While the AEB with Pedestrian Detection system is operating, you may hear the sound of brake operation. This is normal and indicates that the AEB with Pedestrian Detection system is operating properly.

NOTE:
The vehicle's stop lights come on when braking is performed by the AEB with Pedestrian Detection system.

Depending on vehicle speed and distance to the vehicle or pedestrian ahead, as well as driving and roadway conditions, the system may help the driver avoid a forward collision or may help mitigate the consequences if a collision should be unavoidable.

If the driver is handling the steering wheel, accelerating or braking, the AEB with Pedestrian Detection system will function later or will not function.

The automatic braking will cease under the following conditions:

- When the steering wheel is turned as far as necessary to avoid a collision.
- When the accelerator pedal is depressed.
- When there is no longer a vehicle or a pedestrian detected ahead.

If the AEB with Pedestrian Detection system has stopped the vehicle, the vehicle will remain at a standstill for approximately 2 seconds before the brakes are released.

When the brake pedal is depressed while the brake is applied by the system, you may feel the pedal effort is changed and may hear a sound and vibration noise. This is normal and does not indicate a malfunction. In addition, the braking force can be increased by adding the pedal effort.

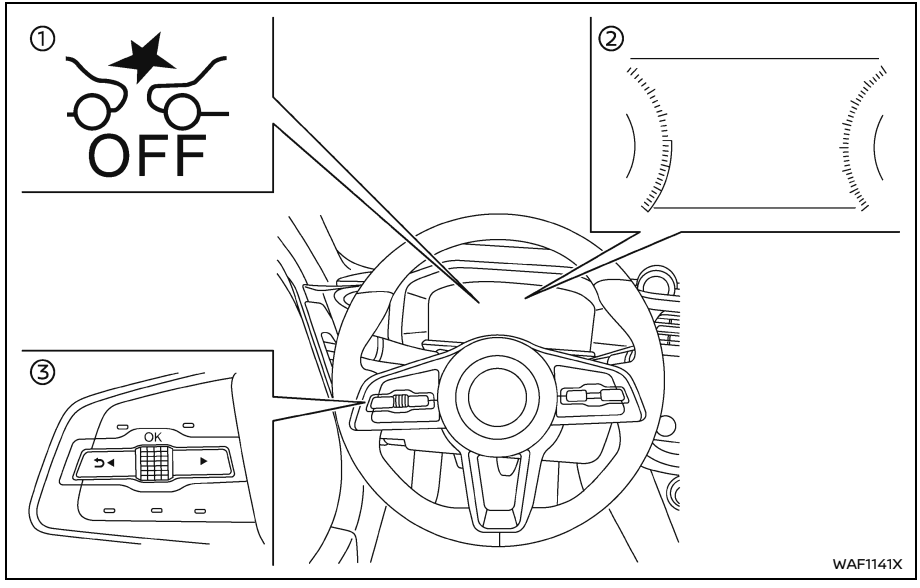

① AEB system OFF warning light
② Vehicle information display
③ Steering-wheel-mounted controls (left side)

TURNING THE AEB WITH PEDESTRIAN DETECTION SYSTEM ON/OFF

Perform the following steps to turn the AEB with Pedestrian Detection system on or off.

1. Push the ◀ ▶ button until "Settings" appears in the vehicle information display and then push the scroll dial. Use the scroll dial to select "Driver Assistance." Then push the scroll dial.
2. Select "Emergency Brake" and use the scroll dial to turn the system on or off.

When the AEB with Pedestrian Detection system is turned off, the AEB system OFF warning light illuminates.

NOTE:

- **The AEB with Pedestrian Detection system will be automatically turned ON when the engine is restarted.**
- **The Intelligent Forward Collision Warning (I-FCW) system is integrated into the AEB with Pedestrian Detection system. There is not a separate selection for the I-FCW system. When the AEB with Pedestrian Detection system is turned off, the I-FCW system is also turned off.**

AEB WITH PEDESTRIAN DETECTION SYSTEM LIMITATIONS

⚠ WARNING

Listed below are the system limitations for the AEB with Pedestrian Detection system. Failure to operate the vehicle in accordance with these system limitations could result in serious injury or death.

- **The AEB with Pedestrian Detection system cannot detect all vehicles or pedestrians under all conditions.**
- **The AEB with Pedestrian Detection system does not detect the following:**
  - **Pedestrians that are small (for example, children), in a sitting position, operating toys/skateboards, on scooters or in wheelchairs, or not in an upright standing or walking position.**
  - **Animals of any size.**
  - **Obstacles (for example, cargo or debris) on the roadway or roadside.**
  - **Oncoming or crossing vehicles.**
  - **Vehicles where the tires are difficult to see or the shape of the rear of the vehicle is unclear or obstructed.**
  - **Parked vehicles.**
- **The AEB with Pedestrian Detection system has some performance limitations.**
  - **If a stationary vehicle is in the vehicle's path, the system will not function when the vehicle approaches the stationary vehicle at speeds over approximately 50 MPH (80 km/h).**
  - **Pedestrian detection will not function when the vehicle is driven at speeds over approximately 37 MPH (60 km/h) or below approximately 6 MPH (10 km/h).**
- **For pedestrians, the AEB with Pedestrian Detection system will not issue the first warning.**
- **The AEB with Pedestrian Detection system may not function properly or detect a vehicle or pedestrian ahead in the following conditions:**
  - **In poor visibility conditions (such as rain, snow, fog, dust storms, sand storms, smoke, and road spray from other vehicles).**
  - **If dirt, ice, snow, fog or other material is covering the radar sensor area or camera area of the windshield.**
  - **If strong light (for example, sunlight or high beams) enters the front camera or a sudden change in brightness occurs (for example, entering a tunnel or driving in lightning).**
  - **In dark or dimly lit conditions, such as at night or in tunnels, including cases where your vehicle's headlights are off or dim, or the tail lights of the vehicle ahead are off.**
  - **When the direction of the camera is misaligned.**
  - **When driving on a steep downhill slope, on roads with sharp curves, and/or bumpy or dirt roads.**
  - **If there is interference by other radar sources.**
  - **When your vehicle's position or movement is changed quickly or significantly (for example, lane change, turning vehicle, abrupt steering, sudden acceleration or deceleration).**

- When your vehicle or the vehicle or pedestrian ahead moves quickly or significantly such that the system cannot detect and react in time (for example, pedestrian moving quickly toward the vehicle at close range, vehicle cutting in, changing lanes, making a turn, steering abruptly, sudden acceleration or deceleration).
- When the vehicle or pedestrian is offset from the vehicle's forward path.
- If the speed difference between the two vehicles is small.
- The pedestrian's profile is partially obscured or unidentifiable; for example, due to transporting luggage, pushing a stroller, wearing bulky or very loose-fitting clothing or accessories, or being in a unique posture (such as raising hands).
- There is poor contrast of a person to the background, such as having clothing color or pattern which is similar to the background.
- For approximately 15 seconds after starting the engine
- If the vehicle ahead has a unique or unusual shape, extremely low or high clearance heights, or unusual cargo loading or is narrow (for example, a motorcycle).
- When the vehicle or pedestrian is located near a traffic sign, a reflective area (for example, water on road), or is in a shadow.
- When multiple pedestrians are grouped together.
- When the view of the pedestrian is obscured by a vehicle or other object.

- The system performance may be degraded in the following conditions:
  - The vehicle is driven on a slippery road.
  - The vehicle is driven on a slope.
  - Excessively heavy baggage is loaded in the cargo area of your vehicle.

- The system is designed to automatically check the sensor (radar and camera)'s functionality, within certain limitations. The system may not detect some forms of obstruction of the sensor area such as ice, snow or stickers, for example. In these cases, the system may not be able to warn the driver properly. Be sure that you check, clean and clear sensor areas regularly.
- In some road and traffic conditions, the AEB with Pedestrian Detection system may unexpectedly apply partial braking. When acceleration is necessary, depress the accelerator pedal to override the system.
- The AEB with Pedestrian Detection system may operate when a pattern, object, shadow or lights are detected that are similar to the outline of vehicles or pedestrians, or if they are the same size and position as a vehicle or motorcycle's tail lights.
- The system may keep operating when the vehicle ahead is turning right or left.

- **The system may operate when your vehicle is approaching and passing a vehicle ahead.**
- **Depending on the road shape (curved road, entrance and exit of the curve, winding road, lane regulation, under construction, etc.), the system may operate temporarily for the oncoming vehicle in front of your vehicle.**

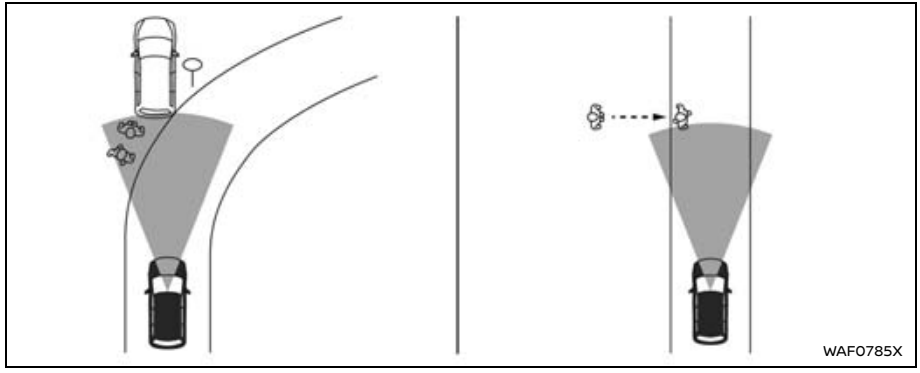

⚠ WARNING

Listed below are the system limitations for the AEB with Pedestrian Detection system. Failure to operate the vehicle in accordance with these system limitations could result in serious injury or death.

- **The AEB with Pedestrian Detection system may react to:**
  - **objects on the roadside (traffic sign, guardrail, pedestrian, motorcycle, vehicle, etc.)**
  - **pedestrians when driving on the narrow alleys, etc.**
  - **pedestrians who temporarily protrude into or approaching the driving lane to avoid the obstacles on the road shoulder**
  - **objects above road (low bridge, traffic sign, etc.)**
  - **objects on the road surface (railroad track, grate, steel plate, etc.)**
  - **objects in the parking garage (beam, pillar, etc.)**
  - **pedestrians or motorcycles approaching the traveling lane**

  - **– vehicles, pedestrians, motorcycles or objects in adjacent lanes or close to the vehicle**
  - **– oncoming pedestrians**
  - **– objects on the road (such as trees)**
- **Braking distances increase on slippery surfaces.**
- **Excessive noise will interfere with the warning chime sound, and the chime may not be heard.**

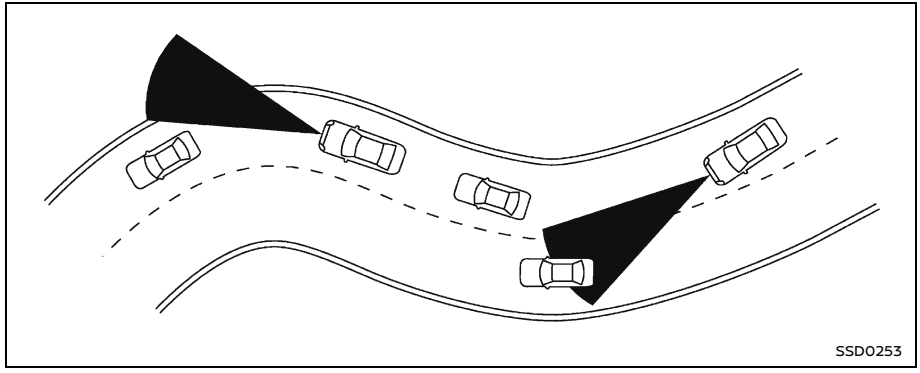

When driving on some roads, such as winding, hilly, curved, narrow roads, or roads which are under construction or on a slope, the sensor may detect vehicles in a different lane, or may temporarily not detect a vehicle traveling ahead. This may cause the system to work inappropriately.

The detection of vehicles may also be affected by vehicle operation (steering maneuver or traveling position in the lane, etc.) or vehicle condition. **If this occurs, the system may warn you by blinking the system indicator and sounding the chime unexpectedly. You will have to manually control the proper distance away from the vehicle traveling ahead.**

SYSTEM TEMPORARILY UNAVAILABLE

Condition A

When the radar sensor picks up interference from another radar source, making it impossible to detect a vehicle ahead, the AEB with Pedestrian Detection system is automatically turned off.

The AEB system OFF warning light and Vehicle ahead detection indicator will illuminate.

Action to take:

When the above conditions no longer exist, the AEB with Pedestrian Detection system will resume automatically.

Condition B

If the following conditions, the AEB system OFF warning light and Vehicle ahead detection indicator will flash (no message appears in the vehicle information display).

- Strong light is shining from the front of the vehicle.
- The cabin temperature is over approximately 104°F (40°C) in direct sunlight.
- The camera area of windshield glass is continuously covered with dirt, etc.
- The camera unit detects it's misalignment condition.

Action to take:

When the above conditions no longer exist, the AEB with Pedestrian Detection system will resume automatically.

NOTE:
When the inside of the windshield on camera area is misted or frozen, it will take a period of time to remove it after air conditioner turns on. If dirt appears on this area, it is recommended you visit a NISSAN dealer.

Condition C

When there is inclement weather (rain, fog, snow, etc.) blocking the front radar sensor, the AEB with Pedestrian Detection system will be canceled, the "Forward Driving Aids temporarily disabled Front Sensor blocked See Owner's Manual" warning message will appear in the vehicle information display.

The AEB system OFF warning light and Vehicle ahead detection indicator will illuminate.

Action to take:

When the conditions listed above are no longer present, the warning message will no longer be available in the vehicle information display. If the "Forward Driving Aids temporarily disabled Front Sensor blocked See Owner's Manual" warning message continues to be displayed, have the system checked. It is recommended that you visit a NISSAN dealer for this service.

Condition D

When the radar sensor of the front bumper is covered with dirt or is obstructed, the AEB with Pedestrian Detection system will automatically be canceled. The "Forward Driving Aids temporarily disabled Front Sensor blocked See Owner's Manual" warning message will appear in the vehicle information display.

The AEB system OFF warning light and Vehicle ahead detection indicator will illuminate.

Action to take:

If the warning message appears, stop the vehicle in a safe place, push the park button to shift to the P (Park) position (for automatic transmission model) or the shift lever to the N (Neutral) position (for manual transmission model). And turn the engine off. When the radar signal is temporarily interrupted, clean the sensor area of the front bumper and restart the engine. If the "Forward Driving Aids temporarily disabled Front Sensor blocked See Owner's Manual" warning message continues to be displayed, have the system checked. It is recommended that you visit a NISSAN dealer for this service.

Condition E

When driving on roads with limited road structures or buildings (for example, long bridges, deserts, snowfields, driving next to long walls), the system may illuminate the AEB system OFF warning light and display the "Forward Driving Aids temporarily disabled Front Sensor blocked See Owner's Manual" message.

The Vehicle ahead detection indicator will illuminate.

Action to take:

When the above driving conditions no longer exist, turn the system back on.

NOTE:
If the AEB with Pedestrian Detection system stops working, the I-FCW system will also stop working.

Condition F

When the Vehicle Dynamic Control (VDC) system is OFF or the Traction mode is ON (for NISMO models), the AEB brake will not operate. In this case only visible and audible warning operates. The AEB system OFF warning light (orange) will illuminate.

Action to take:

When the VDC system is ON, the AEB with Pedestrian Detection system will resume automatically.

SYSTEM MALFUNCTION

If the AEB with Pedestrian Detection system malfunctions, it will be turned off automatically, a chime will sound, the AEB system OFF warning light (orange) will illuminate and the "Malfunction See Owner's Manual" warning message will appear in the vehicle information display.

Action to take:

If the warning light (orange) comes on, stop the vehicle in a safe location. Turn the engine off and restart the engine. If the warning light continues to illuminate, have the AEB with Pedestrian Detection system checked. It is recommended that you visit a NISSAN dealer for this service.

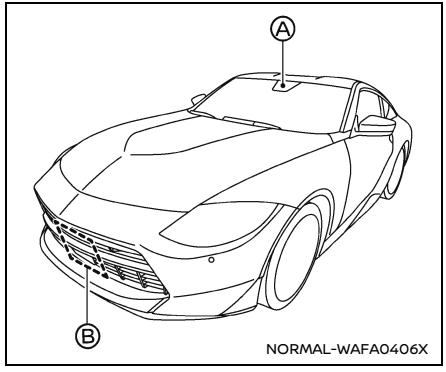

SYSTEM MAINTENANCE

Basic information

The radar sensor Ⓑ is located on the front of the vehicle. The camera Ⓐ is located on the upper side of the windshield.

To keep the AEB with Pedestrian Detection system operating properly, be sure to observe the following:

- Always keep the sensor area on the front of the vehicle and windshield clean.
- Do not strike or damage the areas around the sensors (ex. bumper, windshield).

- Do not cover or attach stickers or similar objects on the front of the vehicle near the sensor area. This could cause failure or malfunction.
- Do not attach metallic objects near the radar sensor area (brush guard, etc.). This could cause failure or malfunction.
- Do not place reflective materials, such as white paper or a mirror, on the instrument panel. The reflection of sunlight may adversely affect the camera unit's detection capability.
- Do not alter, remove or paint the front of the vehicle near the sensor area. Before customizing or restoring the sensor area, it is recommended that you visit a NISSAN dealer.

Radio frequency statement

NOTE:
FCC Notice:
For USA:
Advanced Radar Sensor, ARS4-B
FCC ID: OAYARS4B
Radiofrequency radiation exposure information: This equipment complies with radiation exposure limits set forth for an uncontrolled environment. This equipment should be installed and operated with minimum distance of 20 cm between the radiator and the body of any persons, user or bystander. This transmitter must not be co-located or operating in conjunction with any other antenna or transmitter.
US FCC Notice:
Changes or modifications not expressly approved by the party responsible for compliance could void the user's authority to operate the equipment.
For Canada:
IC: 4135A-ARS4B
This device complies with Industry Canada license-exempt RSS standard(s). Operation is subject to the following two conditions: (1) This device may not cause harmful interference, and (2) This device must accept any interference received, including interference that may cause undesired operation.
Le présent appareil est conforme aux CNR d'Industrie Canada applicables aux appareils radio exempts de licence. L'exploitation est autorisée aux deux conditions suivantes : (1) l'appareil ne doit pas produire de brouillage, et (2) l'utilisateur de l'appareil doit accepter tout brouillage radioélectrique subi, même si le brouillage est susceptible d'en compromettre le fonctionnement.
Radiofrequency radiation exposure Information: This equipment complies with IC radiation exposure limits set forth for an uncontrolled environment. This equipment should be installed and operated with minimum distance of 20 cm between the radiator and your body. This transmitter must not be co-located or operating in conjunction with any other antenna or transmitter.
Informations sur l'exposition aux rayonnements radiofréquences : Cet équipement est conforme aux limites d'exposition aux rayonnements IC établies pour un environnement non contrôlé. Cet équipement doit être installé et utilisé avec un minimum de 20 cm de distance entre la source de rayonnement et votre corps. Cet émetteur ne doit pas être localisé où fonctionner en conjonction avec une autre antenne ou un autre émetteur.

REAR CROSS TRAFFIC ALERT (RCTA)

BASIC INFORMATION

⚠ WARNING

Failure to follow the warnings and instructions for proper use of the RCTA system could result in serious injury or death.

- **The RCTA system is not a replacement for proper driving procedures and is not designed to prevent contact with vehicles or objects. When backing out of a parking space, always use the side and rear mirrors and turn and look in the direction your vehicle will move. Never rely solely on the RCTA system.**

The RCTA system will assist you when backing out from a parking space. When the vehicle is in reverse, the system is designed to detect other vehicles approaching from the right or left of the vehicle. If the system detects cross traffic, it will alert you.

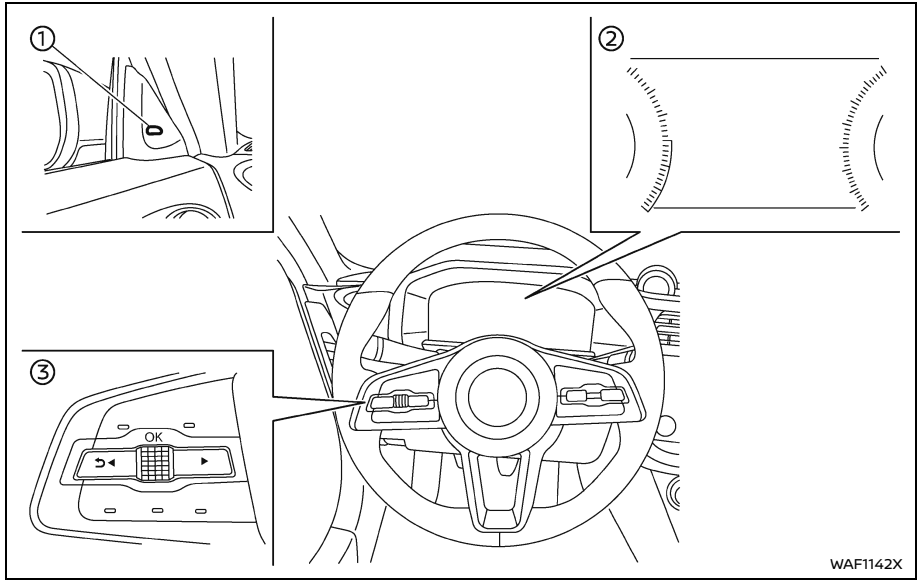

① Side indicator light
② Vehicle information display
③ Steering-wheel-mounted controls (left side)

RCTA SYSTEM OPERATION

The RCTA system can help alert the driver of an approaching vehicle when the driver is backing out of a parking space.

When the shift position is in R (Reverse) and the vehicle speed is less than approximately 5 MPH (8 km/h), the RCTA system is operational.

If the radar detects an approaching vehicle from either side, the system chimes (once) and the side indicator light flashes

on the side the vehicle is approaching from.

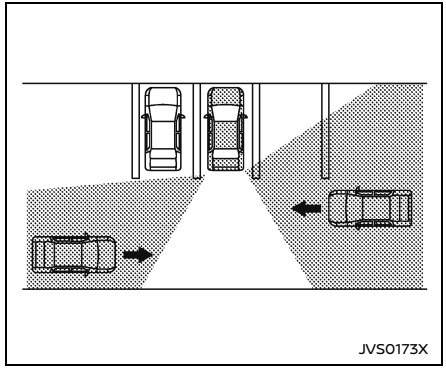

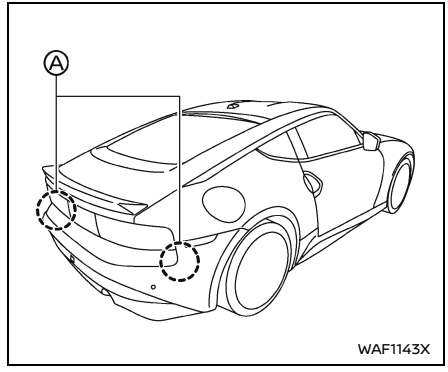

The RCTA system uses radar sensors Ⓐ installed on both sides near the rear bumper to detect an approaching vehicle.

The radar sensors can detect an approaching vehicle from up to approximately 66 ft (20 m) away.

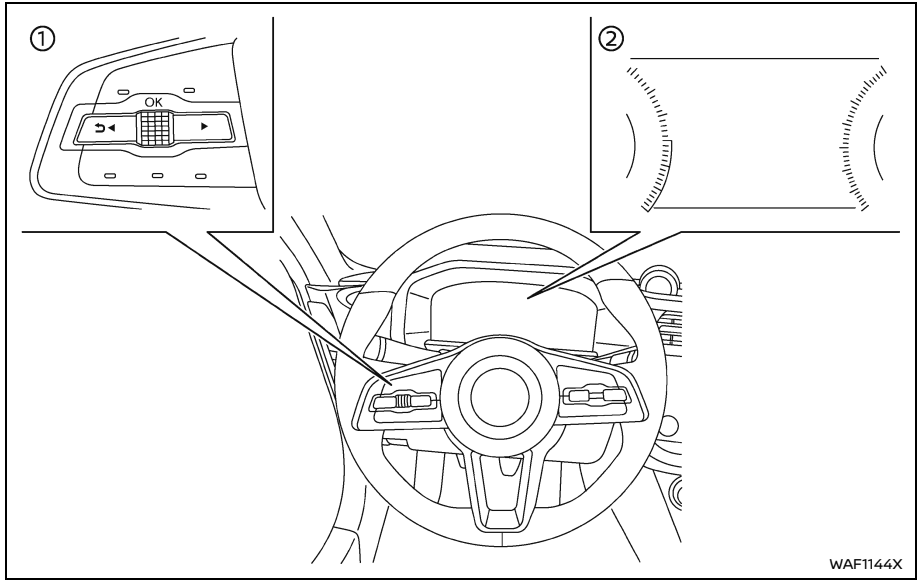

① Steering-wheel-mounted controls (left side)

② Vehicle information display

HOW TO ENABLE/DISABLE THE RCTA SYSTEM

Perform the following steps to enable or disable the RCTA system.

1. Push the ◀ ▶ button until "Settings" appears in the vehicle information display and then push the scroll dial. Use the scroll dial to select "Driver Assistance". Then push the scroll dial.
2. Select "Rear Cross Traffic Alert" and use the scroll dial to turn the system on or off.

NOTE:
When enabling/disabling the system, the system setting will be retained even if the engine is restarted.

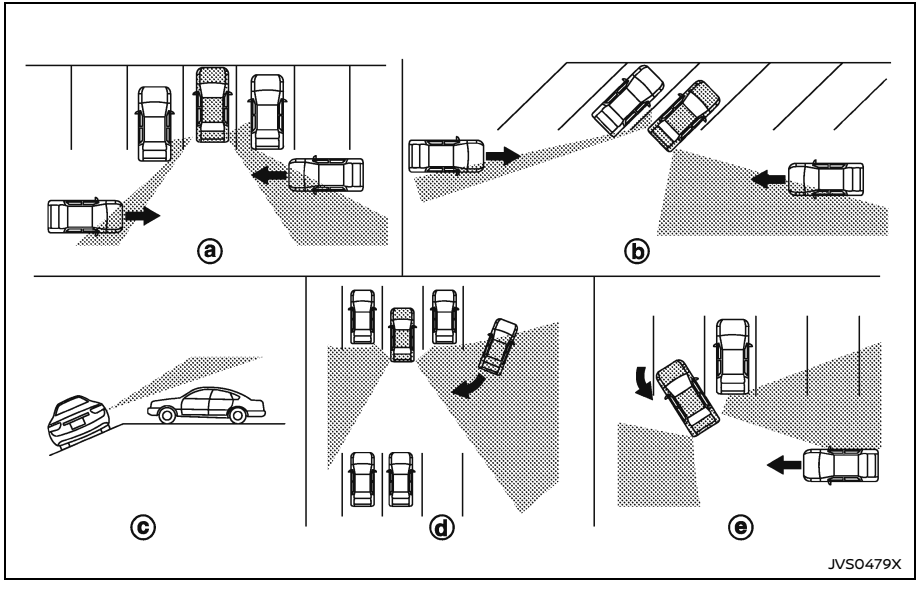

RCTA SYSTEM LIMITATIONS

⚠ WARNING

Listed below are the system limitations for the RCTA system. Failure to operate the vehicle in accordance with these system limitations could result in serious injury or death.

- **Always check surroundings and turn to check what is behind you before backing up. The radar sensors detect approaching (moving) vehicles. The radar sensors cannot detect every object such as:**
  - **Pedestrians, bicycles, motorcycles, animals or child-operated toy vehicles**
  - **A vehicle that is passing at speeds greater than approximately 19 MPH (30 km/h)**
  - **A vehicle that is passing at speeds lower than approximately 5 MPH (8 km/h)**
- **The radar sensors may not detect approaching vehicles in certain situations:**
  - **Illustration ⓐ: When a vehicle parked next to you obstructs the beam of the radar sensor.**

- **– Illustration ⓑ: When the vehicle is parked in an angled parking space.**
- **– Illustration ⓒ: When the vehicle is parked on inclined ground.**
- **– Illustration ⓓ: When an approaching vehicle turns into your vehicle's parking lot aisle.**
- **– Illustration ⓔ: When the angle formed by your vehicle and approaching vehicle is small**

- **The following conditions may reduce the ability of the radar to detect other vehicles:**
  - **– Severe weather**
  - **– Road spray**
  - **– Ice/frost/snow/dirt build-up on the vehicle**
- **Do not attach stickers (including transparent material), install accessories or apply additional paint near the radar sensors. These conditions may reduce the ability of the radar to detect other vehicles**
- **Excessive noise (e.g. audio system volume, open vehicle window) will interfere with the chime sound, and it may not be heard.**
- **Objects such as guardrails, walls, foliage and parked vehicles may occasionally be detected. This is a normal operation condition.**

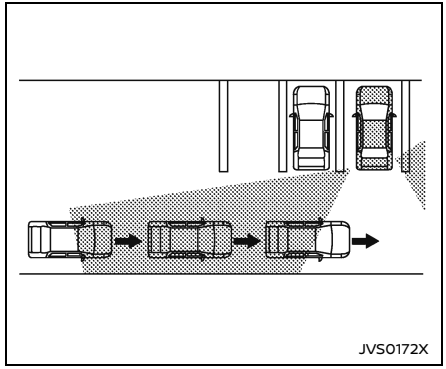

Illustration 1

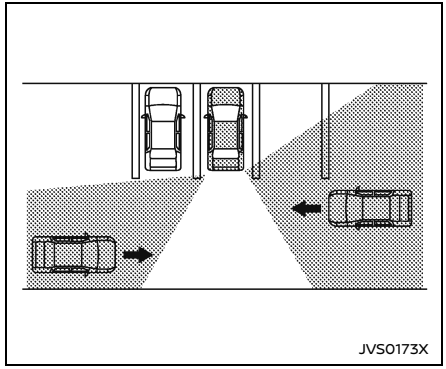

Illustration 2

NOTE:
In the case of several vehicles approaching in a row (Illustration 1) or in the opposite direction (Illustration 2), a chime may not be sounded by the RCTA system after the first vehicle passes the sensors.

SYSTEM TEMPORARILY UNAVAILABLE

When radar blockage is detected, the system will be deactivated automatically. The "Unavailable Side Radar Obstruction" warning message will appear in the vehicle information display.

The system is not available until the conditions no longer exist.

The radar sensors may be blocked by temporary ambient conditions such as splashing water, mist or fog.

The blocked condition may also be caused by conditions such as ice, frost, snow or dirt obstructing the radar sensors.

NOTE:
If the BSW system stops working, the RCTA system will also stop working.

Action to take:

When the above conditions no longer exist, the system will resume automatically.

SYSTEM MALFUNCTION

When the RCTA system malfunctions, it will turn off automatically. The "Malfunction See Owner's Manual" warning message will appear in the vehicle information display.

NOTE:
If the BSW system stops working, the RCTA system will also stop working.

Action to take:

Stop the vehicle in a safe location, turn the engine off and restart the engine. If the message continues to appear, have the system checked. It is recommended that you visit a NISSAN dealer for this service.

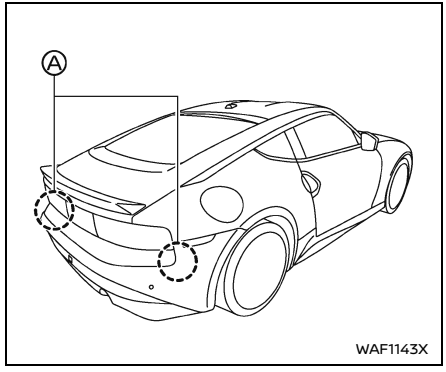

SYSTEM MAINTENANCE

Basic information

The two radar sensors Ⓐ for the BSW and RCTA system are located near the rear bumper. Always keep the area near the radar sensors clean.

The radar sensors may be blocked by temporary ambient conditions such as splashing water, mist or fog.

The blocked condition may also be caused by conditions such as ice, frost, snow or dirt obstructing the radar sensors.

Check for and remove objects obstruct-

ing the area around the radar sensors.

Do not attach stickers (including transparent material), install accessories or apply additional paint near the radar sensors.

Do not strike or damage the area around the radar sensors. It is recommended that you visit a NISSAN dealer if the area around the radar sensors is damaged due to a collision.

Precautions on repairing the bumper

When repairing the bumper, take cautious because the radar sensors are installed on the bumper. For more details, see "Precautions on repairing the bumper" (P.228).

Radio frequency statement

NOTE:

FCC Notice:

For USA:

FCC ID: OAYSRR3B

This device complies with Part 15 of the FCC Rules. Operation is subject to the following two conditions: 1. This device may not cause harmful interference, and 2. This device must accept any interference received, including interference that may cause undesired operation.

Radiofrequency radiation exposure information: This equipment complies with radiation exposure limits set forth for an uncontrolled environment. This equipment should be installed and operated with minimum distance of 20 cm between the radiator and the body of any persons, user or bystander.

FCC Notice:

Changes or modifications not expressly approved by the party responsible for compliance could void the user's authority to operate the equipment.

For Canada:

IC ID: 4135A-SRR3B

This device contains licence-exempt transmitter(s)/receiver(s) that comply with Innovation, Science and Economic Development Canada's licence-exempt RSS(s). Operation is subject to the following two conditions: 1. This device may not cause interference. 2. This device must accept any interference, including interference that may cause undesired operation of the device.

Radiofrequency radiation exposure information: This equipment complies with radiation exposure limits set forth for an uncontrolled environment. This equipment should be installed and operated with minimum distance of 20 cm between the radiator and the body of any persons, user or bystander.

"L'émetteur/récepteur exempt de licence contenu dans le présent appareil est conforme aux CNR d'Innovation, Sciences et Développement économique Canada applicables aux appareils radio exempts de licence. L'exploitation est autorisée aux deux conditions suivantes : 1. L'appareil ne doit pas produire de brouillage; 2. L'appareil doit accepter tout brouillage radioélectrique subi, même si le brouillage est susceptible d'en compromettre le fonctionnement. Cet équipement est conforme aux limites d'exposition aux rayonnements établies pour un environnement non contrôlé. Cet équipement doit être installé et utilisé avec un minimum de 20 cm de distance entre la source de rayonnement et votre corps.

INTELLIGENT FORWARD COLLISION WARNING (I-FCW)

BASIC INFORMATION

⚠ WARNING

Failure to follow the warnings and instructions for proper use of the I-FCW system could result in serious injury or death.

- **The I-FCW system helps warn the driver before a collision but will not avoid a collision. It is the driver's responsibility to stay alert, drive safely and be in control of the vehicle at all times.**

The I-FCW system can help alert the driver when there is a sudden braking of a second vehicle traveling in front of the vehicle ahead in the same lane.

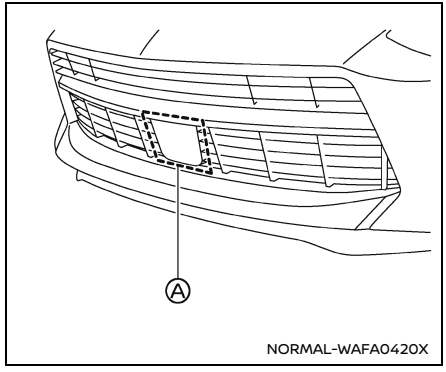

The I-FCW system uses a radar sensor Ⓐ located on the front of the vehicle to measure the distance to the vehicle ahead in the same lane.

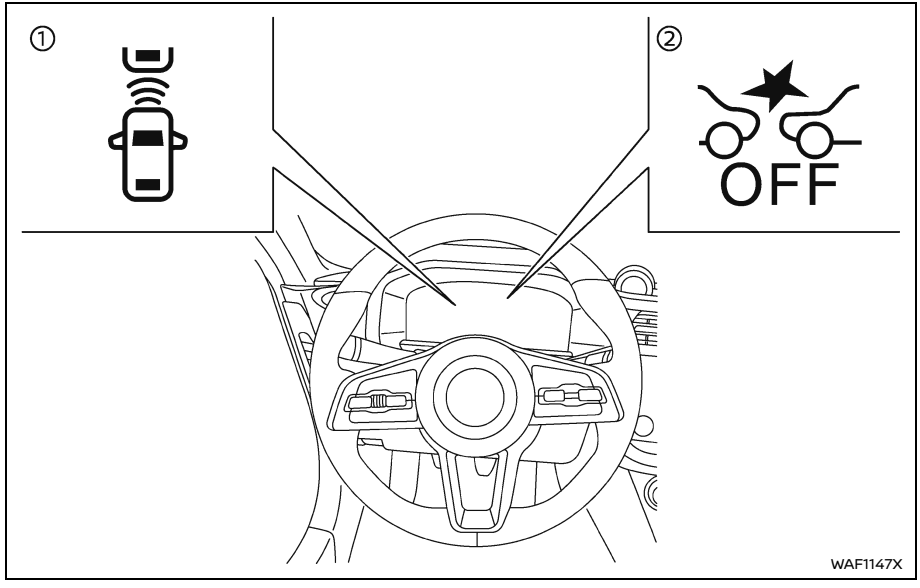

① Vehicle ahead detection indicator

② Automatic Emergency Braking (AEB) system OFF warning light

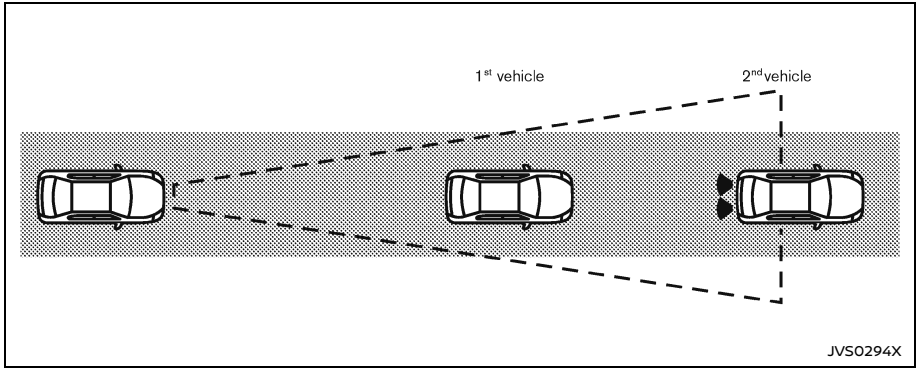

I-FCW SYSTEM OPERATION

The I-FCW system operates at speeds above approximately 3 MPH (5 km/h).

If there is a potential risk of a forward collision, the I-FCW system will warn the driver by blinking the vehicle ahead detection indicator, and sounding an audible alert.

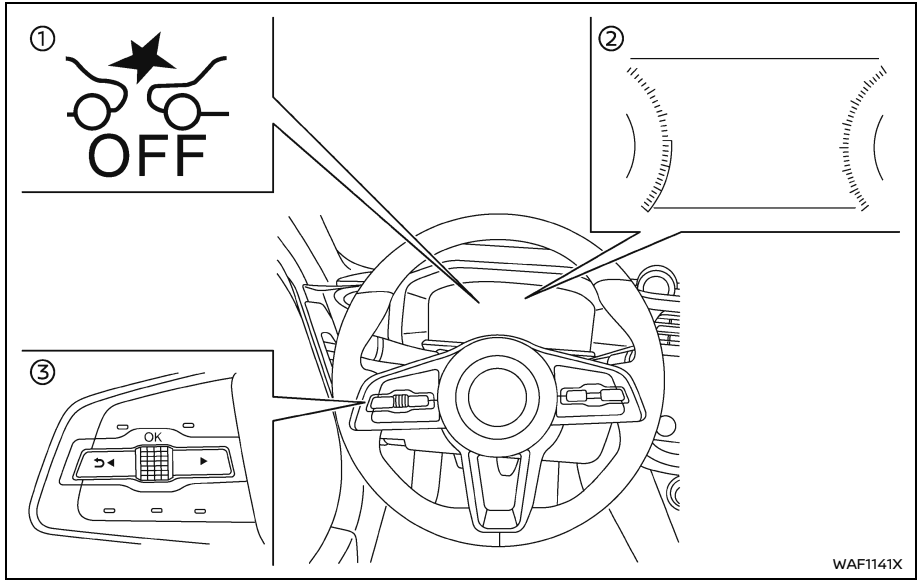

① AEB system OFF warning light
② Vehicle information display
③ Steering-wheel-mounted controls (left side)

TURNING THE I-FCW SYSTEM ON/OFF

Perform the following steps to turn the I-FCW system on or off.

1. Push the ◀ ▶ button until "Settings" appears in the vehicle information display and then push the scroll dial. Use the scroll dial to select "Driver Assistance." Then push the scroll dial.
2. Select "Emergency Braking" and use the scroll dial to turn the system on or off.

When the I-FCW system is turned off, the AEB system OFF warning light (orange) illuminates.

NOTE:

- **The I-FCW system will be automatically turned on when the engine is restarted.**
- **The I-FCW system is integrated into the AEB with Pedestrian Detection system. There is not a separate selection for the I-FCW system. When the AEB with Pedestrian Detection system is turned off, the I-FCW system is also turned off.**

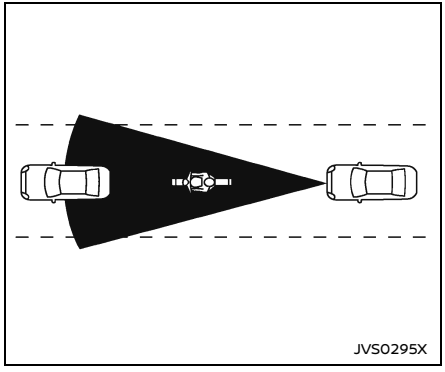

Illustration A

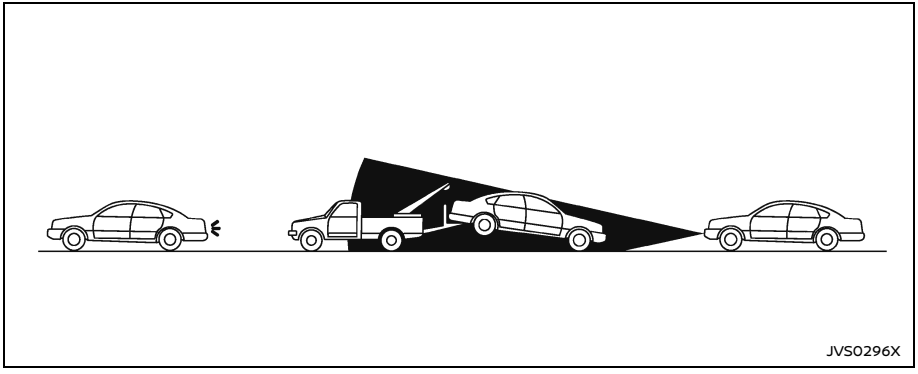

Illustration B

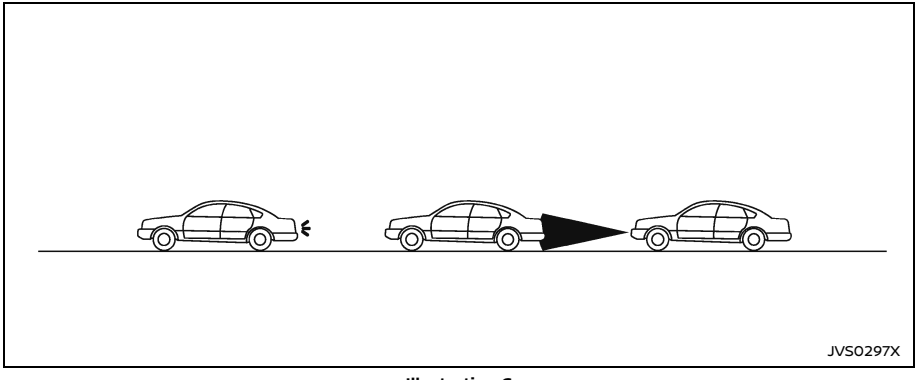

Illustration C

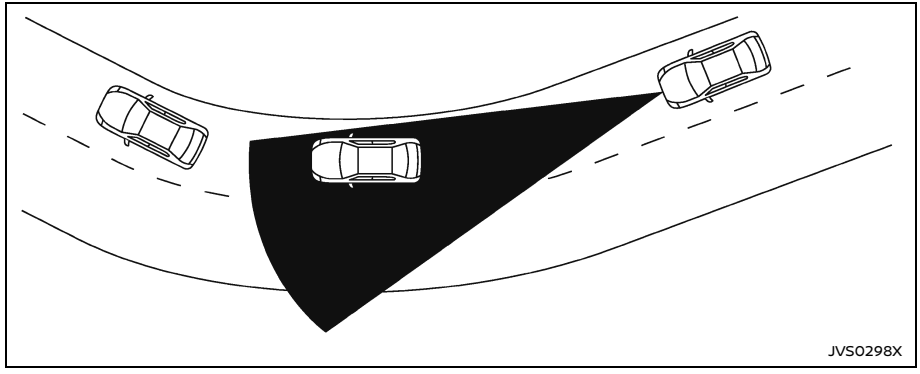

Illustration D

I-FCW SYSTEM LIMITATIONS

⚠ WARNING

Listed below are the system limitations for the I-FCW system. Failure to operate the vehicle in accordance with these system limitations could result in serious injury or death.

- **The I-FCW system cannot detect all vehicles under all conditions.**
- **The radar sensor does not detect the following objects:**
  - **– Pedestrians, animals or obstacles in the roadway**
  - **– Oncoming vehicles**
  - **– Crossing vehicles**
- **(Illustration A) The I-FCW system does not function when a vehicle ahead is a narrow vehicle, such as a motorcycle.**
- **The radar sensor may not detect a vehicle ahead in the following conditions:**
  - **– Snow or heavy rain**
  - **– Dirt, ice, snow or other material covering the radar sensor**
  - **– Interference by other radar sources**
  - **– Snow or road spray from travelling vehicles.**
  - **– Driving in a tunnel**
- **(Illustration B) When the vehicle ahead is being towed.**
- **(Illustration C) When the distance to the vehicle ahead is too close, the beam of the radar sensor is obstructed.**
- **(Illustration D) When driving on a steep downhill slope or roads with sharp curves.**
- **The system is designed to automatically check the sensor's functionality, within certain limitations. The system may not detect some forms of obstruction of the sensor area such as ice, snow, stickers, for example. In these cases, the system may not be able to warn the driver properly. Be sure that you check, clean and clear the sensor area regularly.**
- **Excessive noise will interfere with the warning chime sound, and the chime may not be heard.**

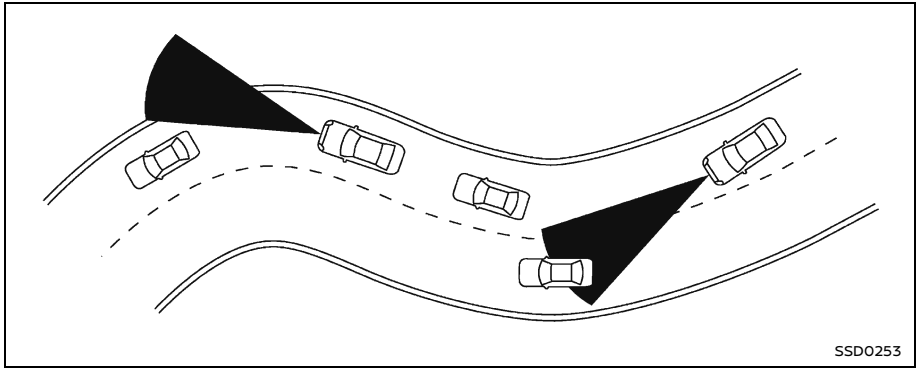

When driving on some roads, such as winding, hilly, curved, narrow roads, or roads which are under construction, the radar sensor may detect vehicles in a different lane, or may temporarily not detect a vehicle traveling ahead. This may cause the I-FCW system to work inappropriately.

The detection of vehicles may also be affected by vehicle operation (steering maneuver or traveling position in the lane, etc.) or vehicle condition. **If this occurs, the system may warn you by blinking the vehicle ahead detection indicator and sounding the chime unexpectedly. You will have to manually control the proper distance away from the vehicle traveling ahead.**

SYSTEM TEMPORARILY UNAVAILABLE

Condition A

When the radar sensor picks up interference from another radar source, making it impossible to detect a vehicle ahead, the I-FCW system is automatically turned off.

The AEB system OFF warning light and Vehicle ahead detection indicator will illuminate.

Action to take:

When the above conditions no longer exist, the I-FCW system will resume automatically.

Condition B

When there is inclement weather (rain, fog, snow, etc.) blocking the front radar sensor, the I-FCW system will be canceled, the "Forward Driving Aids temporarily disabled Front Sensor blocked See Owner's Manual" warning message will appear in the vehicle information display. The AEB system OFF warning light and Vehicle ahead detection indicator will illuminate.

Action to take:

When the conditions listed above are no longer present, the warning message will no longer be available in the vehicle information display. If the "Forward Driving Aids temporarily disabled Front Sensor blocked See Owner's Manual" warning message continues to be displayed, have the system checked. It is recommended that you visit a NISSAN dealer for this service.

Condition C

When the radar sensor of the front bumper is covered with dirt or is obstructed, the I-FCW system will automatically be canceled. The "Forward Driving Aids temporarily disabled Front Sensor blocked See Owner's Manual" warning message will appear in the vehicle information display.

The AEB system OFF warning light and Vehicle ahead detection indicator will illuminate.

Action to take:

If the warning message appears, stop the vehicle in a safe place, push the park button to shift to the P (Park) position (for automatic transmission model) or the shift lever to the N (Neutral) position (for manual transmission model). And turn the engine off. When the radar signal is temporarily interrupted, clean the sensor area of the front bumper and restart the engine. If the "Forward Driving Aids temporarily disabled Front Sensor blocked See Owner's Manual" warning message continues to be displayed, have the system checked. It is recommended that you visit a NISSAN dealer for this service.

Condition D

When driving on roads with limited road structures or buildings (for example, long bridges, deserts, snowfields, driving next to long walls), the system may illuminate the AEB system OFF warning light and display the "Forward Driving Aids Temporarily Disabled Front Sensor Blocked See Owner's Manual" message.

The Vehicle ahead detection indicator will illuminate.

Action to take:

When the above driving conditions no longer exist, turn the system back on.

NOTE:

If the AEB with Pedestrian Detection system stops working, the I-FCW system will also stop working.

SYSTEM MALFUNCTION

If the I-FCW system malfunctions, it will be turned off automatically, a chime will sound, the AEB system OFF warning light (orange) will illuminate and the "Malfunction See Owner's Manual" warning message will appear in the vehicle information display.

Action to take:

If the warning light (orange) illuminates, stop the vehicle in a safe location. Turn the engine off and restart the engine. If the warning light continues to illuminate, have the I-FCW system checked. It is recommended you visit a NISSAN dealer for this service.

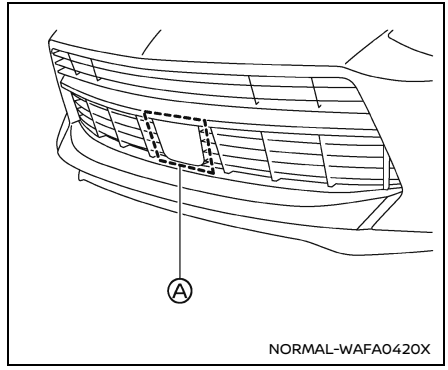

SYSTEM MAINTENANCE

Basic information

The radar sensor Ⓐ is located on the front of the vehicle.

To keep the system operating properly, be sure to observe the following:

- Always keep the sensor area on the front of the vehicle clean.
- Do not strike or damage the areas around the sensor.
- Do not cover or attach stickers or similar objects on the front bumper near the sensor area. This could cause failure or malfunction.

- Do not attach metallic objects near the sensor area (brush guard, etc.). This could cause failure or malfunction.
- Do not alter, remove or paint the front bumper. It is recommended you contact a NISSAN dealer before customizing or restoring the front bumper.

Radio frequency statement

NOTE:
FCC Notice:
For USA:
Advanced Radar Sensor, ARS4-B
FCC ID: OAYARS4B

Radiofrequency radiation exposure information: This equipment complies with radiation exposure limits set forth for an uncontrolled environment. This equipment should be installed and operated with minimum distance of 20 cm between the radiator and the body of any persons, user or bystander. This transmitter must not be co-located or operating in conjunction with any other antenna or transmitter.

US FCC Notice:

Changes or modifications not expressly approved by the party responsible for compliance could void the user's authority to operate the equipment.

For Canada:
IC: 4135A-ARS4B

This device complies with Industry Canada license-exempt RSS standard(s). Operation is subject to the following two conditions: (1) This device may not cause harmful interference, and (2) This device must accept any interference received, including interference that may cause undesired operation.

Le présent appareil est conforme aux CNR d'Industrie Canada applicables aux appareils radio exempts de licence. L'exploitation est autorisée aux deux conditions suivantes : (1) l'appareil ne doit pas produire de brouillage, et (2) l'utilisateur de l'appareil doit accepter tout brouillage radioélectrique subi, même si le brouillage est susceptible d'en compromettre le fonctionnement.

Radiofrequency radiation exposure Information: This equipment complies with IC radiation exposure limits set forth for an uncontrolled environment. This equipment should be installed and operated with minimum distance of 20 cm between the radiator and your body. This transmitter must not be co-located or operating in conjunction with any other antenna or transmitter.

Informations sur l'exposition aux rayonnements radiofréquences : Cet équipement est conforme aux limites d'exposition aux rayonnements IC établies pour un environnement non contrôlé. Cet équipement doit être installé et utilisé avec un minimum de 20 cm de distance entre la source de rayonnement et votre corps. Cet émetteur ne doit pas être localisé où fonctionner en conjonction avec une autre antenne ou un autre émetteur.

INTELLIGENT DRIVER ALERTNESS (I-DA)

BASIC INFORMATION

⚠ WARNING

Failure to follow the warnings and instructions for proper use of the I-DA system could result in serious injury or death.

- **The I-DA system is only a warning to inform the driver of a potential lack of driver attention or drowsiness. It will not steer the vehicle or prevent loss of control.**
- **The I-DA system does not detect and provide an alert of the driver's lack of attention or fatigue in every situation.**
- **It is the driver's responsibility to:**
  - **Stay alert.**
  - **Drive safely.**
  - **Keep the vehicle in the traveling lane.**
  - **Be in control of the vehicle at all times.**
  - **Avoid driving when tired.**
  - **Avoid distractions (texting, etc).**

The I-DA system helps alert the driver if the system detects a lack of attention or driving fatigue.

The system monitors driving style and steering behavior over a period of time, and it detects changes from the normal pattern. If the system detects that driver attention is decreasing over a period of time, the system uses audible and visual warnings to suggest that the driver take a break.

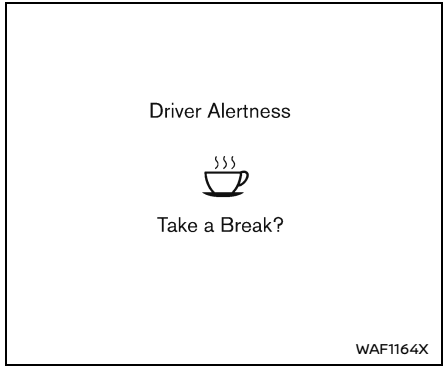

I-DA SYSTEM OPERATION

If the system detects driver fatigue or that driver attention is decreasing, the message "Take a Break?" appears in the vehicle information display and a chime sounds when the vehicle is driven at speeds above 37 MPH (60 km/h).

The system continuously monitors driver attention and can provide multiple warnings per trip.

The system resets and starts reassessing driving style and steering behavior when the ignition switch is cycled from the ON to the OFF position and back to the ON position.

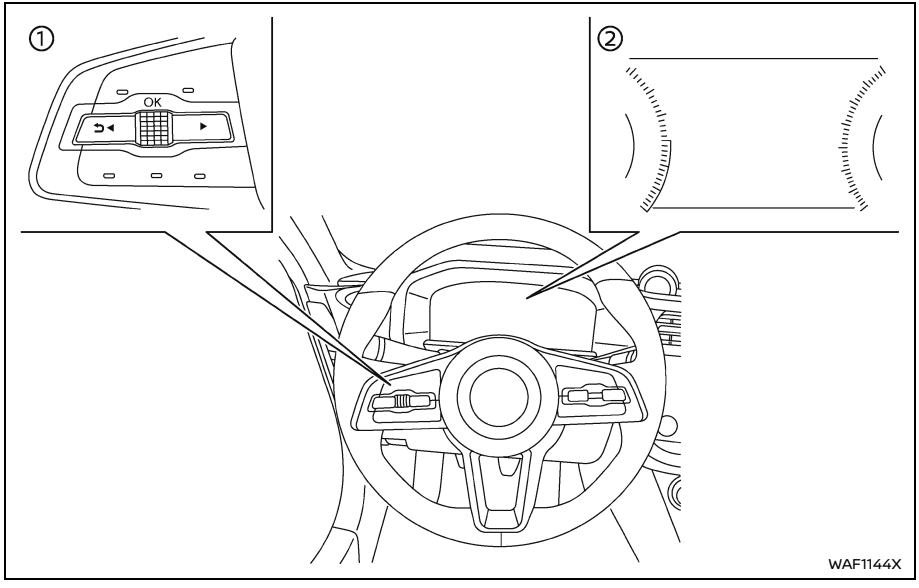

① Steering-wheel-mounted control (left side)

② Vehicle information display

HOW TO ENABLE/DISABLE THE I-DA SYSTEM

Perform the following steps to enable or disable the I–DA system.

1. Push the ◀ ▶ button until "Settings" appears in the vehicle information display and push the scroll dial. Use the scroll dial to select "Driver Assistance." Then push the scroll dial.
2. Select "Driver Alertness" and push the scroll dial.

NOTE:
The setting will be retained even if the engine is restarted.

I-DA SYSTEM LIMITATIONS

⚠ WARNING

Listed below are the system limitations for the I–DA system. Failure to operate the vehicle in accordance with these system limitations could result in serious injury or death.

- **The I-DA system may not operate properly and may not provide an alert in the following conditions:**
  - **Poor road conditions such as an uneven road surface or pot holes.**
  - **Strong side wind.**
  - **If you have adopted a sporty driving style with higher cornering speeds or higher rates of acceleration.**
  - **Frequent lane changes or changes to vehicle speed.**
- **The I–DA system will not provide an alert in the following conditions:**
  - **Vehicle speeds lower than 37 mph (60 km/h).**

– Short lapses of attention.
– Instantaneous distractions such as dropping an object.

SYSTEM MALFUNCTION

If the I-DA system malfunctions, the "Malfunction See Owner's Manual" warning message will appear in the vehicle information display and the function will be stopped automatically.

Action to take

Stop the vehicle in a safe location, place the vehicle in P (Park) position (Automatic transmission models) or move the shift lever to the N (Neutral) position (Manual transmission models). Turn the engine off and restart the engine. If the warning message continues to appear, have the system checked. It is recommended that you visit a NISSAN dealer for this service.

⚠ WARNING

- **Never rely solely on the hill start assist system to prevent the vehicle from moving backward on a hill. Always drive carefully and attentively. Depress the brake pedal when the vehicle is stopped on a steep hill. Be especially careful when stopped on a hill on frozen or muddy roads. Failure to prevent the vehicle from rolling backwards may result in a loss of control of the vehicle and possible serious injury or death.**
- **The hill start assist system is not designed to hold the vehicle at a standstill on a hill. Depress the brake pedal when the vehicle is stopped on a steep hill. Failure to do so may cause the vehicle to roll backwards and may result in a collision or serious personal injury.**
- **The hill start assist system may not prevent the vehicle from rolling backwards on a hill under all load or road conditions. Always be prepared to depress the brake pedal to prevent the vehicle from rolling backwards. Failure to do so may result in a collision or serious personal injury.**

The hill start assist system automatically keeps the brakes applied to help prevent the vehicle from rolling backwards in the time it takes the driver to release the brake pedal and apply the accelerator when the vehicle is stopped on a hill.

The hill start assist system will operate automatically under the following conditions:

- The transmission is shifted to a forward or reverse gear.
- The vehicle is stopped completely on a hill by applying the brake.

The maximum holding time is 2 seconds. After 2 seconds the vehicle will begin to roll back and the hill start assist system will stop operating completely.

The hill start assist system will not operate when the transmission is shifted to the N (Neutral) or P (Park) position or on a flat and level road.

When the slip indicator light illuminates in the meter, the hill start assist system will not operate. (See "Slip indicator light" (P.85).)

FRONT AND REAR SONAR SYSTEM

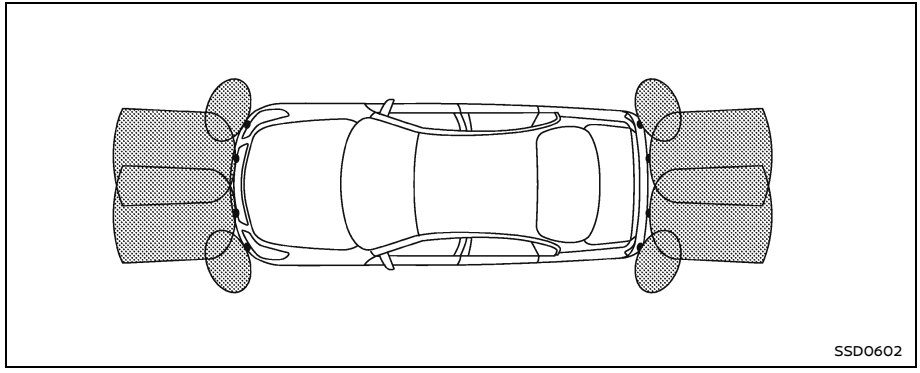
SSD0602

BASIC INFORMATION

The sonar system sounds a tone to warn the driver of obstacles near the bumper using the sonar sensors located in the front and rear bumpers. When the sonar system is turned on, the sonar view will automatically appear in the vehicle information display.

⚠ WARNING

- **The sonar system is a convenience but it is not a substitute for proper parking.**
- **The driver is always responsible for safety during parking and other maneuvers. Always look around and check that it is safe to do so before parking.**
- **Read and understand the limitations of the sonar system as contained in this section. The colors of the sonar indicator indicates different distances to the object.**

- **Inclement weather or ultrasonic sources such as an automatic car wash, a truck's compressed-air brakes or a pneumatic drill may affect the function of the system; this may include reduced performance or a false activation.**
- **The sonar system is designed as an aid to the driver in detecting large stationary objects to help avoid damaging the vehicle.**
- **The sonar system is not designed to prevent contact with small or moving objects. Always move slowly. The system will not detect small objects below the bumper, and may not detect objects close to the bumper or on the ground.**
- **The sonar system may not detect the following objects: fluffy objects such as snow, cloth, cotton, glass-wool, etc.; thin objects such as rope, wire and chain, etc.; or wedge-shaped objects.**

- **The front and rear sonar detect the distance between the vehicle and the obstacle by detecting the sound wave reflected from the surface of an obstacle. When there is a sound such as horn, or an ultrasonic source (such as sonar of other vehicles) around the vehicle, the sonar may not detect objects properly.**

If your vehicle sustains damage to the bumper fascia, leaving it misaligned or bent, the sensing zone may be altered causing inaccurate measurement of obstacles or false alarms.

⚠ CAUTION

- **Excessive noise (such as audio system volume or an open vehicle window) will interfere with the tone and it may not be heard.**
- **Keep the sonar sensors (located on the bumper fascia) free from snow, ice and large accumulations of dirt. Do not clean the sonar with sharp objects. If the sensors are covered, the accuracy of the sonar function will be diminished.**

SYSTEM OPERATION

For Automatic transmission models and Manual transmission models with SynchroRev Match mode (S-MODE)

The system detects front obstacles when the shift lever is in the D (Drive) position. The system detects both front and rear obstacles when the shift lever is in the R (Reverse) position.

For Manual transmission models without SynchroRev Match mode (S-MODE)

The system detects front obstacles when the shift lever is in the D (Drive) position or N (Neutral) position. The system detects both front and rear obstacles when the shift lever is in the R (Reverse) position.

The system may not detect objects at speeds above 6 MPH (10 km/h) and may not detect certain angular or moving objects.

The sonar system detects obstacles up to 3.9 ft (1.2 m) from the bumper with a decreased coverage area at the outer corners of the bumper. Refer to the illustration for approximate zone coverage areas. As you move closer to the obstacle, the rate of the tone increases. When the obstacle is less than 11.8 in (30 cm) away, the tone will sound continuously.

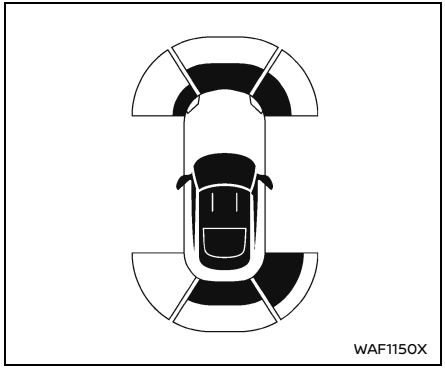

Example

When the vehicle moves closer to an obstacle, the sonar indicator (detected area) appears in the vehicle information display.

SONAR SYSTEM SETTINGS

Perform the following steps to set up the sonar system function.

1. Push the ◀ ▶ button until "Settings" appears in the vehicle information display and then push the scroll dial. Use the scroll dial to select "Driver Assistance." Then push the scroll dial.
2. Select "Parking Assist" and push the scroll dial.
3. Use the scroll dial to navigate in the menu and select or change an item:
   - Sensor
     — Changes the mode of sonar sensors to "ON," "OFF," "Front Only"
   - Sonar Distance
     — Changes the sonar sensor's detection distance to "Long," "Medium" or "Short"
   - Auto Show Sonar
     — Shows the sonar display in the vehicle information display when the sonar activates
   - Sonar Volume
     — Changes the volume of the tone sound to "High," "Medium" or "Low"

SONAR LIMITATIONS

⚠ WARNING

Listed below are the system limitations for the sonar system. Failure to operate the vehicle in accordance with these system limitations could result in serious injury or death.

- **Read and understand the limitations of the sonar system as contained in this section. Inclement weather may affect the function of the sonar system; this may include reduced performance or a false activation.**
- **The sonar system is deactivated at speeds above 6 MPH (10 km/h). It is reactivated at lower speeds.**
- **Inclement weather or ultrasonic sources such as an automatic car wash, a truck's compressed-air brakes or a pneumatic drill may affect the function of the sonar system; this may include reduced performance or a false activation.**
- **The sonar system is not designed to prevent contact with small or moving objects. Always move slowly. The system will not detect small objects below the bumper or on the ground.**
- **The sonar system may not detect the following objects: fluffy objects such as snow, cloth, cotton, glass-wool, etc.; thin objects such as rope, wire and chain, etc.; or wedge-shaped objects; complex-shaped objects or multiple objects in close.**

- **The sonar system may not detect objects at speed above 3 MPH (5 km/h) and may not detect certain angular or moving objects.**
- **The sonar system may not operate in the following conditions:**
  - **When rain, snow, ice, dirt, etc. adheres to the sonar.**
  - **When a loud sound is heard in the area around the vehicle.**
  - **When the surface of the obstacle is diagonal to the front or rear of the vehicle.**
  - **When a sonar or the area around the sensor is extremely hot or cold.**
- **The sonar system may unintentionally operate in the following conditions:**
  - **When there is overgrown grass in the area around the vehicle.**
  - **When there are bumps, protrusions or manhole covers on the road surface.**
  - **When the vehicle drives through a draped flag or a curtain.**
  - **When there is an accumulation of snow or ice behind the vehicle.**
  - **When driving on a steep hill.**

SYSTEM TEMPORARILY UNAVAILABLE

When sonar blockage is detected, the system will be deactivated automatically.

The system is not available until the conditions no longer exist.

The sonar sensors may be blocked by temporary ambient conditions such as splashing water, mist or fog. The blocked condition may also be caused by objects such as ice, frost or dirt obstructing the sonar sensors.

Action to take:

When the above conditions no longer exist, the system will resume automatically.

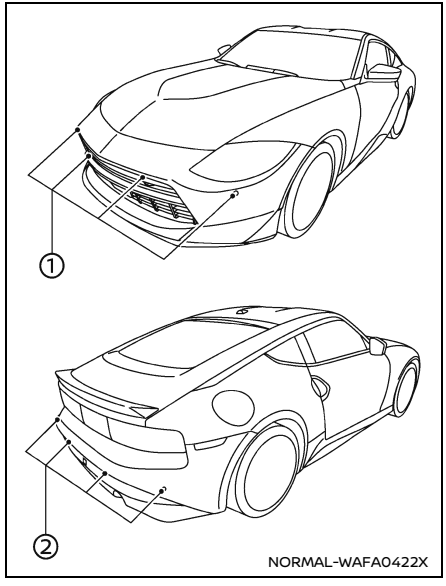

SYSTEM MAINTENANCE

The sonar sensors are located on the front ① and rear ② of the vehicle.

- Always keep the area near the sonar sensors clean.

- If the sonar sensors are dirty, wipe them off with a soft cloth while being careful to not damage them.
- The sonar sensors may be blocked by temporary ambient conditions such as splashing water, mist or fog. The blocked condition may also be caused by objects such as ice, frost or dirt obstructing the sonar sensors. Check for and remove objects obstructing the area around the sonar sensors.
- Do not subject the area around the sonar sensors to strong impact. Also, do not remove or disassemble the sonar sensors. If the sonar sensors and peripheral areas are deformed in an accident, etc., have the sonar sensors checked. It is recommended you visit a NISSAN dealer for this service.
- Do not attach stickers (including transparent material), install accessories or apply additional paint on the sonar sensors and their surrounding areas. This may cause a malfunction or improper operation.
- When washing the vehicle using a high-pressure washer, do not apply direct washer pressure on the sonar sensors. This may cause a malfunction of the sonar sensors.

BREAK-IN SCHEDULE

⚠ CAUTION

During the first 1,200 miles (2,000 km), follow these recommendations to obtain maximum engine performance and ensure the future reliability and economy of your new vehicle.

Failure to follow these recommendations may result in shortened engine life and reduced engine performance.

- Avoid driving for long periods at constant speed, either fast or slow. Do not run the engine over 4,000 rpm.
- Do not accelerate at full throttle in any gear.
- Avoid quick starts.
- Avoid hard braking as much as possible.

FUEL EFFICIENT DRIVING TIPS

Follow these easy-to-use Fuel Efficient Driving Tips to help you achieve the most fuel economy from your vehicle.

1. Use smooth accelerator and brake pedal application.
   - Avoid rapid starts and stops.
   - Use smooth, gentle accelerator and brake application whenever possible.
   - Maintain constant speed while commuting and coast whenever possible.
2. Maintain constant speed.
   - Look ahead to try and anticipate and minimize stops.
   - Synchronizing your speed with traffic lights allows you to reduce your number of stops.
   - Maintaining a steady speed can minimize red light stops and improve fuel efficiency.
3. Use air conditioning (A/C) at higher vehicle speeds.
   - Below 40 MPH (64 km/h), it is more efficient to open windows to cool the vehicle due to reduced engine load.
   - Above 40 MPH (64 km/h), it is more efficient to use A/C to cool the vehicle due to increased aerodynamic drag.

- Recirculating the cool air in the cabin when the A/C is on reduces cooling load.

4. Drive at economical speeds and distances.
   - Observing the speed limit and not exceeding 60 MPH (97 km/h) (where legally allowed) can improve fuel efficiency due to reduced aerodynamic drag.
   - Maintaining a safe following distance behind other vehicles reduces unnecessary braking.
   - Safely monitoring traffic to anticipate changes in speed permits reduced braking and smooth acceleration changes.
   - Select a gear range suitable to road conditions.
5. Use cruise control.
   - Using cruise control during highway driving helps maintain a steady speed.
   - Cruise control is particularly effective in providing fuel savings when driving on flat terrains.
6. Plan for the shortest route.
   - Utilize a map or navigation system to determine the best route to save time.
7. Avoid idling.
   - Shutting off your engine when safe for stops exceeding 30-60 seconds saves fuel and reduces emissions.
8. Buy an automated pass for toll roads.
   - Automated passes permit drivers to use special lanes to maintain cruising speed through the toll and avoid stopping and starting.
9. Winter warm up.
   - Limit idling time to minimize impact to fuel economy.
   - Vehicles typically need no more than 30 seconds of idling at start-up to effectively circulate the engine oil before driving.
   - Your vehicle will reach its ideal operating temperature more quickly while driving versus idling.
10. Keeping your vehicle cool.
    - Park your vehicle in a covered parking area or in the shade whenever possible.
    - When entering a hot vehicle, opening the windows will help to reduce the inside temperature faster, resulting in reduced demand on your A/C system.

- Keep your engine tuned up.
- Follow the recommended scheduled maintenance.
- Keep the tires inflated to the correct pressure. Low tire pressure increases tire wear and lowers fuel economy.
- Keep the wheels in correct alignment. Improper alignment increases tire wear and lowers fuel economy.
- Use the recommended viscosity engine oil. (See "Engine oil and oil filter recommendation" (P.392).)

LIMITED SLIP DIFFERENTIAL (LSD) (if so equipped)

The rear final drive of this vehicle is equipped with a mechanical Limited Slip Differential (LSD).

⚠ WARNING

Sudden operation of the accelerator pedal can result in fishtailing or side-slip, possibly causing an accident. Use particular caution when driving in rainy weather or on slippery roads.

NOTE:

- **Use the designated differential gear oil. If any oil other than the designated oil is used, the LSD may not operate correctly, and noise and vibration may occur, possibly resulting in a malfunction.**
- **If the vehicle accelerates from a stop with the steering wheel turned in cold temperatures, the inner wheel tire may slip and some noise or vibration may be heard. This phenomenon is unique to vehicles equipped with the LSD. This does not indicate that there is a malfunction.**
- **The LSD controls the speed difference between the left and right wheels, and optimally allocates torque to the wheels.**
- **The mechanical LSD in the rear final drive of this vehicle is characterized by its asymmetrical LSD effects when the accelerator pedal is ON and when it is OFF. This allows the appropriate amount of torque for the driving environment to be transmitted to the road surface.**

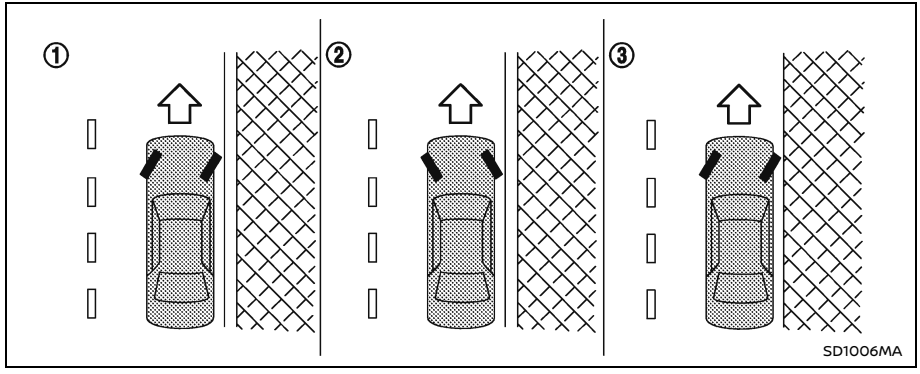

WARNING

- **Do not stop or park the vehicle over flammable materials such as dry grass, waste paper or rags. They may ignite and cause a fire.**
- **Never leave the engine running while the vehicle is unattended.**
- **Do not leave children unattended inside the vehicle. They could unknowingly activate switches or controls. Unattended children could become involved in serious accidents.**
- **To help avoid risk of injury or death through unintended operation of the vehicle and/or its systems, do not leave children, people who require the assistance of others or pets unattended in your vehicle. Additionally, the temperature inside a closed vehicle on a warm day can quickly become high enough to cause a significant risk of injury or death to people and pets.**
- **Safe parking procedures require that both the parking brake be applied and the transmission placed into P (Park) for Automatic Transmission (AT) model or in an appropriate gear for Manual Transmission (MT) model. Failure to do so could cause the vehicle to move unexpectedly or roll away and result in an accident.**
- **Make sure the automatic transmission shift lever cannot be moved without depressing the foot brake pedal.**

1. Firmly apply the parking brake.
2. **Automatic transmission models:**
   Push the park button to shift to the P (Park) position.
   Manual transmission models:
   Place the shift lever in the R (Reverse) gear. When parking on an uphill grade, place the shift lever in the 1st gear.
3. To help prevent the vehicle from rolling into the street when parked on a sloping drive way, it is a good practice to turn the wheels as illustrated.
   - HEADED DOWNHILL WITH CURB: ① Turn the wheels into the curb and move the vehicle forward until the

curb side wheel gently touches the curb.

- HEADED UPHILL WITH CURB: ②
  Turn the wheels away from the curb and move the vehicle back until the curb side wheel gently touches the curb.
- HEADED UPHILL OR DOWNHILL, NO CURB: ③
  Turn the wheels toward the side of the road so the vehicle will move away from the center of the road if it moves.

4. Push the ignition switch to the OFF position.

⚠ WARNING

- **If the engine is not running or is turned off while driving, the power assist for the steering will not work. Steering will be harder to operate.**
- **When the electric power steering warning light illuminates with the engine running, there will be no power assist for the steering. You will still have control of the vehicle, but the steering will be harder to operate. Have the power steering system checked. It is recommended that you visit a NISSAN dealer for this service.**

The power steering system is designed to provide power assist while driving to operate the steering wheel with light force.

When the steering wheel is operated repeatedly or continuously while parking or driving at a very low speed, the power assist for the steering wheel will be reduced. This is to prevent overheating of the power steering system and protect it from getting damaged. While the power assist is reduced, steering wheel operation will become heavy. When the temperature of the power steering system goes down, the power assist level will return to normal. Avoid repeating such steering wheel operations that could cause the power steering system to overheat.

You may hear a sound when the steering wheel is operated quickly. However, this is not a malfunction.

If the electric power steering warning light illuminates while the engine is running, it may indicate the power steering system is not functioning properly and may need servicing. Have the power steering system checked. It is recommended that you visit a NISSAN dealer for this service.

When the electric power steering warning light illuminates with the engine running, there will be no power assist for the steering, but you will still have control of the vehicle. At this time, greater steering effort is required to operate the steering wheel, especially in sharp turns and at low speeds.

For additional information, see "Electric power steering warning light" (P.82).

BRAKING PRECAUTIONS

Basic information

The brake system has two separate hydraulic circuits. If one circuit malfunctions, you will still have braking at two wheels.

Vacuum assisted brakes

The brake booster aids braking by using engine vacuum. If the engine stops, you can stop the vehicle by depressing the brake pedal. However, greater foot pressure on the brake pedal will be required to stop the vehicle and the stopping distance will be longer.

Wet brakes

When the vehicle is washed or driven through water, the brakes may get wet. As a result, your braking distance will be longer and the vehicle may pull to one side during braking.

To dry brakes, drive the vehicle at a safe speed while lightly tapping the brake pedal to heat-up the brakes. Do this until the brakes return to normal. Avoid driving the vehicle at high speeds until the brakes function correctly.

PARKING BRAKE BREAK-IN

Basic information

Break in the parking brake shoes whenever the stopping effect of the parking brake is weakened or whenever the parking brake shoes and/or drums/rotors are replaced, in order to assure the best braking performance.

This procedure is described in the vehicle service manual. It is recommended you visit a NISSAN dealer for this service.

Using the brakes

Avoid resting your foot on the brake pedal while driving. This will cause overheating of the brakes, wearing out the brake and pads faster and reduce gas mileage.

To help save the brakes and to prevent the brakes from overheating, reduce speed and downshift to a lower gear before going down a slope or long grade. Overheated brakes may reduce braking performance and could result in loss of vehicle control.

⚠ WARNING

- **While driving on a slippery surface, be careful when braking, accelerating or downshifting. Abrupt braking or accelerating could cause the wheels to skid and result in an accident.**
- **If the engine is not running or is turned off while driving, the power assist for the brakes will not work. Braking will be harder.**

BRAKE ASSIST

When the force applied to the brake pedal exceeds a certain level, the Brake Assist is activated generating greater braking force than a conventional brake booster even with light pedal force.

⚠ WARNING

The Brake Assist is only an aid to assist braking operation and is not a collision warning or avoidance device. It is the driver's responsibility to stay alert, drive safely and be in control of the vehicle at all times.

ANTI-LOCK BRAKING SYSTEM (ABS)

Basic information

⚠ WARNING

- **The Anti-lock Braking System (ABS) is a sophisticated device, but it cannot prevent accidents resulting from careless or dangerous driving techniques. It can help maintain vehicle control during braking on slippery surfaces. Remember that stopping distances on slippery surfaces will be longer than on normal surfaces even with ABS. Stopping distances may also be longer on rough, gravel or snow covered roads, or if you are using tire chains. Always maintain a safe distance from the vehicle in front of you. Ultimately, the driver is responsible for safety.**
- **Tire type and condition may also affect braking effectiveness.**
  - **When replacing tires, install the specified size of tires on all four wheels.**
  - **For detailed information, see "Wheels and tires" (P.353) of this manual.**

The Anti-lock Braking System (ABS) controls the brakes so the wheels do not lock during hard braking or when braking on slippery surfaces. The system detects the rotation speed at each wheel and varies the brake fluid pressure to prevent each wheel from locking and sliding. By preventing each wheel from locking, the system helps the driver maintain steering control and helps to minimize swerving and spinning on slippery surfaces.

Using the system

Depress the brake pedal and hold it down. Depress the brake pedal with firm steady pressure, but do not pump the brakes. The ABS will operate to prevent the wheels from locking up. Steer the vehicle to avoid obstacles.

⚠ WARNING

Do not pump the brake pedal. Doing so may result in increased stopping distances.

Self-test feature

The ABS includes electronic sensors, electric pumps, hydraulic solenoids and a computer. The computer has a built-in diagnostic feature that tests the system

each time you start the engine and move the vehicle at a low speed in forward or reverse. When the self-test occurs, you may hear a "clunk" noise and/or feel a pulsation in the brake pedal. This is normal and does not indicate a malfunction. If the computer senses a malfunction, it switches the ABS off and illuminates the ABS warning light on the instrument panel. The brake system then operates normally, but without anti-lock assistance.

If the ABS warning light illuminates during the self-test or while driving, have the vehicle checked. It is recommended you visit a NISSAN dealer for this service.

Normal operation

The ABS operates at speeds above 3 to 6 MPH (5 to 10 km/h).

When the ABS senses that one or more wheels are close to locking up, the actuator rapidly applies and releases hydraulic pressure. This action is similar to pumping the brakes very quickly. You may feel a pulsation in the brake pedal and hear a noise from under the hood or feel a vibration from the actuator when it is operating. This is normal and indicates that the ABS is operating properly. However, the pulsation may indicate that road conditions are hazardous and extra care is required while driving.

VEHICLE DYNAMIC CONTROL (VDC) SYSTEM

The Vehicle Dynamic Control (VDC) system uses various sensors to monitor driver inputs and vehicle motion. In the VDC system, the Traction mode can be selected by using the VDC OFF switch (for NISMO models). Under certain driving conditions, the VDC system helps to perform the following functions.

- Controls brake pressure to reduce wheel slip on one slipping drive wheel so power is transferred to a non slipping drive wheel on the same axle.
- Controls brake pressure and engine output to reduce drive wheel slip based on vehicle speed (traction control function).
- Controls brake pressure at individual wheels and engine output to help the driver maintain control of the vehicle in the following conditions:
  - understeer (vehicle tends to not follow the steered path despite increased steering input)
  - oversteer (vehicle tends to spin due to certain road or driving conditions).

The VDC system can help the driver to maintain control of the vehicle, but it cannot prevent loss of vehicle control in all driving situations.

When the VDC system operates, the slip

indicator light in the instrument panel flashes so note the following:

- The road may be slippery or the system may determine some action is required to help keep the vehicle on the steered path.
- You may feel a pulsation in the brake pedal and hear a noise or vibration from under the hood. This is normal and indicates that the VDC system is working properly.
- Adjust your speed and driving to the road conditions.

See "Slip indicator light" (P.85).

If a malfunction occurs in the system, the slip indicator light illuminates in the instrument panel. The VDC system automatically turns off.

The VDC OFF switch is used to turn off the VDC system. The VDC off indicator light OFF illuminates to indicate the VDC system is off. When the VDC switch is used to turn off the system, the VDC system still operates to prevent one drive wheel from slipping by transferring power to a non slipping drive wheel. The slip indicator light flashes if this occurs. All other VDC functions are off, and the slip indicator light will not flash. The VDC system is automatically reset to on when the ignition switch is placed in the off position then back to the on position.

See "Slip indicator light" (P.85) and "Vehicle Dynamic Control (VDC) off indicator light" (P.86).

The computer has a built-in diagnostic feature that tests the system each time you start the engine and move the vehicle forward or in reverse at a slow speed. When the self-test occurs, you may hear a “clunk” noise and/or feel a pulsation in the brake pedal. This is normal and is not an indication of a malfunction.

VDC operation is reduced when the Drive Mode Selector is used to select the SPORT mode (if so equipped) or the SPORT+ mode (for NISMO AT models). The VDC system may not operate in the same circumstances when compared to operation in the standard mode. To help prevent accidents drive carefully, avoid careless or dangerous driving techniques and be especially careful when driving and cornering on slippery surfaces. For safe driving operation, push the VDC OFF switch and turn on the VDC system as soon as possible.

WARNING

- **The VDC system is designed to help the driver maintain stability but does not prevent accidents due to abrupt steering operation at high speeds or by careless or dangerous driving techniques. Reduce vehicle speed and be especially careful when driving and cornering on slippery surfaces and always drive carefully.**
- **Do not modify the vehicle’s suspension. If suspension parts such as shock absorbers, struts, springs, stabilizer bars, bushings and wheels are not NISSAN recommended for your vehicle or are extremely deteriorated, the VDC system may not operate properly. This could adversely affect vehicle handling performance, and the slip indicator light may illuminate.**

- **If brake related parts such as brake pads, rotors and calipers are not NISSAN recommended or are extremely deteriorated, the VDC system may not operate properly and the slip indicator light may illuminate.**
- **If engine control related parts are not NISSAN recommended or are extremely deteriorated, the slip indicator light may illuminate.**
- **When driving on extremely inclined surfaces such as higher banked corners, the VDC system may not operate properly and the slip indicator light may illuminate. Do not drive on these types of roads.**
- **When driving on an unstable surface such as a turntable, ferry, elevator or ramp, the slip indicator light may illuminate. This is not a malfunction. Restart the engine after driving onto a stable surface.**
- **If wheels or tires other than the NISSAN recommended ones are used, the VDC system may not operate properly and the slip indicator light may illuminate.**
- **The VDC system is not a substitute for winter tires or tire chains on a snow covered road.**

FREEING A FROZEN DOOR LOCK

To prevent a door lock from freezing, apply deicer through the key hole. If the lock becomes frozen, heat the key before inserting it into the key hole or use the Intelligent Key system.

ANTIFREEZE

In the winter when it is anticipated that the outside temperature will drop below 32°F (0°C), check antifreeze to assure proper winter protection. For additional information, see "Engine cooling system" (P.331).

BATTERY

If the battery is not fully charged during extremely cold weather conditions, the battery fluid may freeze and damage the battery. To maintain maximum efficiency, the battery should be checked regularly. For additional information, see "Battery" (P.339).

DRAINING OF COOLANT WATER

If the vehicle is to be left outside without antifreeze, drain the cooling system, including the engine block. Refill before operating the vehicle. For details, see "Engine cooling system" (P.331).

TIRE EQUIPMENT

SUMMER tires have a tread designed to

provide superior performance on dry pavement. However, the performance of these tires will be substantially reduced in snowy and icy conditions. If you operate your vehicle on snowy or icy roads, NISSAN recommends the use of MUD & SNOW or ALL SEASON tires on all four wheels. It is recommended you consult a NISSAN dealer for the tire type, size, speed rating and availability information.

For additional traction on icy roads, studded tires may be used. However, some U.S. states and Canadian provinces prohibit their use. Check local, state and provincial laws before installing studded tires.

Skid and traction capabilities of studded snow tires, on wet or dry surfaces, may be poorer than that of non-studded snow tires.

Tire chains may be used. For details, see "Tire chains" (P.359) of this manual.

SPECIAL WINTER EQUIPMENT

It is recommended that the following items be carried in the vehicle during winter:

- A scraper and stiff-bristled brush to remove ice and snow from the windows and wiper blades.
- A sturdy, flat board to be placed under the jack to give it firm support.
- A shovel to dig the vehicle out of snowdrifts.
- Extra window washer fluid to refill the reservoir tank.

DRIVING ON SNOW or ICE

⚠ WARNING

- **Wet ice (32˚F, 0˚C and freezing rain), very cold snow or ice can be slick and very hard to drive on. The vehicle will have much less traction or "grip" under these conditions. Try to avoid driving on wet ice until the road is salted or sanded.**
- **Whatever the condition, drive with caution. Accelerate and slow down with care. If accelerating or downshifting too fast, the drive wheels will lose even more traction.**
- **Allow more stopping distance under these conditions. Braking should be started sooner than on dry pavement.**
- **Allow greater following distances on slippery roads.**
- **Watch for slippery spots (glare ice). These may appear on an otherwise clear road in shaded areas. If a patch of ice is seen ahead, brake before reaching it. Try not to brake while on the ice, and avoid any sudden steering maneuvers.**
- **Do not use the cruise control on slippery roads.**
- **Snow can trap dangerous exhaust gases under your vehicle. Keep snow clear of the exhaust pipe and from around your vehicle.**

PARKING BRAKE

⚠ CAUTION

When parking in an area where the outside temperature is below 32˚F (0˚C), the parking brake, if applied, may freeze in place and may be difficult to release.

For safe parking, it is recommended that you place the shift lever in the 1st or R (Reverse) position (Manual transmission models), or place the shift position in the P (Park) position (Automatic transmission models) and securely block the wheels.

ENGINE BLOCK HEATER (if so equipped)

Basic information

Engine block heaters are used to assist with cold temperature starting.

The engine block heater should be used when the outside temperature is 20°F (–7°C) or lower.

To use the engine block heater

1. Turn the engine off.
2. Open the hood and unwrap the engine block heater cord.
3. Plug the engine block heater cord into a grounded 3-wire, 3-pronged extension cord.
4. Plug the extension cord into a Ground Fault Interrupt (GFI) protected, grounded 110-volt AC (VAC) outlet.
5. The engine block heater must be plugged in for at least 2 - 4 hours, depending on outside temperatures, to properly warm the engine coolant. Use an appropriate timer to turn the engine block heater on.
6. Before starting the engine, unplug and properly store the cord to keep it away from moving parts.

⚠ WARNING

- **Do not use your engine block heater with an ungrounded electrical system or a 2-pronged adapter. You can be seriously injured by an electrical shock if you use an ungrounded connection.**
- **Disconnect and properly store the engine block heater cord before starting the engine. Damage to the cord could result in an electrical shock and can cause serious injury.**
- **Use a heavy-duty 3-wire, 3-pronged extension cord rated for at least 10A. Plug the extension cord into a Ground Fault Interrupt (GFI) protected, grounded 110-VAC outlet. Failure to use the proper extension cord or a grounded outlet can result in a fire or electrical shock and cause serious personal injury.**

ACTIVE NOISE CANCELLATION/ACTIVE SOUND ENHANCEMENT (if so equipped)

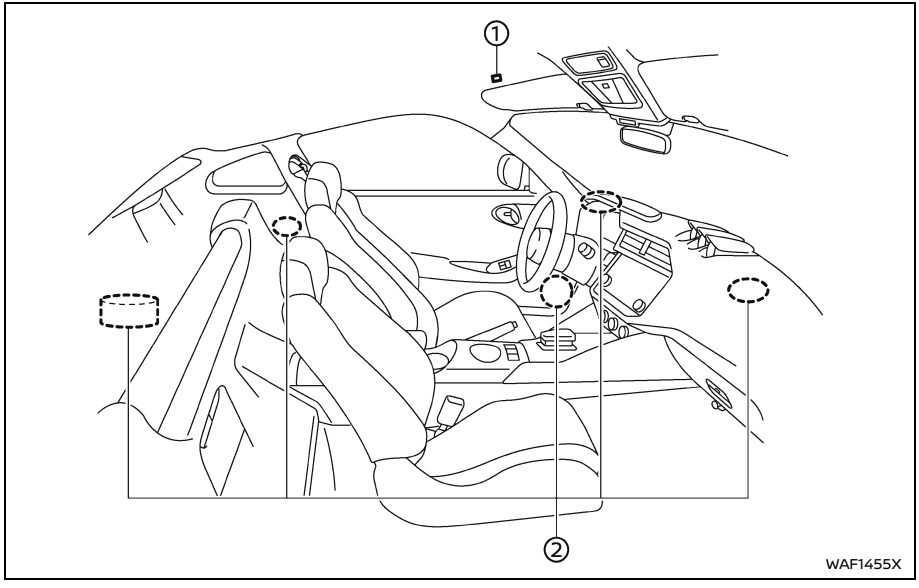

① Microphones
② Speakers

NOTE:
To operate the active noise cancellation and active sound enhancement properly:

- Do not cover the speakers.
- Do not cover the microphones.
- Do not change or modify speakers including any audio related parts such as the amplifier.
- Do not make any modification including sound deadening or modifications around the microphones or speakers.

Active noise cancellation

The active noise cancellation uses microphones ① located inside the vehicle to detect engine booming noises. The system then automatically produces a muted engine booming noise through the speakers ② to reduce engine booming noise.

If the microphone ① or the area around it is tapped, abnormal noise may be output from the speaker.

Active sound enhancement

The active sound enhancement generates sounds according to engine speed and driving modes through the speakers ② to enhance the quality of the engine sound.

In addition, for NISMO AT models, if the gear is shifted or the accelerator pedal is quickly operated when the Drive Mode Selector is used to select the SPORT mode or the SPORT+ mode and the engine warmed up, a sound effect is output to enhance the sense of sportiness. (See "Drive Mode Selector (for AT models and NISMO models)" (P.215).)

6 In case of emergency

Hazard warning flasher switch 298
Roadside assistance program 298
Emergency engine shut off 299
Flat tire 299
- Tire Pressure Monitoring System (TPMS) 299
- Repairing flat tire 300

Jump starting 309
Push starting 311
If your vehicle overheats 311
Towing your vehicle 312
- Basic information 312
- Towing Automatic Transmission recommended by NISSAN (except for NISMO models) 313
- Towing Manual Transmission recommended by NISSAN (except for NISMO models) 314
- Towing recommended by NISSAN (NISMO models) 315
- Vehicle recovery (freeing a stuck vehicle) 315

HAZARD WARNING FLASHER SWITCH

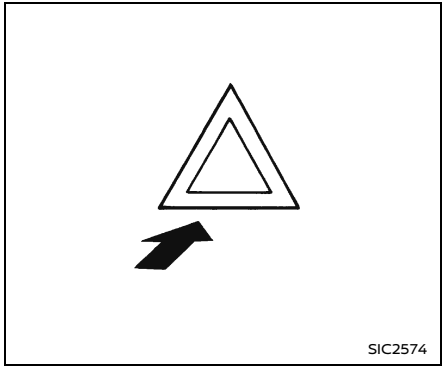

Push the switch on to warn other drivers when you must stop or park under emergency conditions. All turn signal lights will flash.

⚠ WARNING

- **If stopping for an emergency, be sure to move the vehicle well off the road.**
- **Do not use the hazard warning flashers while moving on the highway unless unusual circumstances force you to drive so slowly that your vehicle might become a hazard to other traffic.**
- **Turn signals do not work when the hazard warning flasher lights are on.**

The flasher can be actuated with the ignition switch in any position.

Some state laws may prohibit the use of the hazard warning flasher switch while driving.

ROADSIDE ASSISTANCE PROGRAM

In the event of a roadside emergency, Roadside Assistance Service is available to you. Please refer to your Warranty Information Booklet for details.

EMERGENCY ENGINE SHUT OFF

To shut off the engine in an emergency situation while driving, perform the following procedure:

- Rapidly push the push-button ignition switch 3 consecutive times in less than 1.5 seconds, or
- Push and hold the push-button ignition switch for more than 2 seconds.

FLAT TIRE

TIRE PRESSURE MONITORING SYSTEM (TPMS)

This vehicle is equipped with the Tire Pressure Monitoring System (TPMS). It monitors tire pressure of all tires except the spare. When the low tire pressure warning light is lit and the “Tire Pressure Low - Add Air” warning message is displayed in the vehicle information display, one or more of your tires is significantly under-inflated. If the vehicle is being driven with low tire pressure, the TPMS will activate and warn you of it by the low tire pressure warning light. This system will activate only when the vehicle is driven at speeds above 16 MPH (25 km/h). For more details, see "Warning lights, indicator lights and audible reminders" (P.78) and "Tire Pressure Monitoring System (TPMS)" (P.191).

⚠ WARNING

- **If the low tire pressure warning light illuminates while driving, avoid sudden steering maneuvers or abrupt braking, reduce vehicle speed, pull off the road to a safe location and stop the vehicle as soon as possible. Driving with under-inflated tires may permanently damage the tires and increase the likelihood of tire failure. Serious vehicle damage could occur and may lead to an accident and could result in serious personal injury. Check the tire pressure for all four tires. Adjust the tire pressure to the recommended COLD tire pressure shown on the Tire and Loading Information label to turn the low tire pressure warning light OFF. If the light still illuminates while driving after adjusting the tire pressure, a tire may be flat. If you have a flat tire, repair it with the tire puncture repair kit as soon as possible. If no tire is flat and all tires are properly inflated, it is recommended you consult a NISSAN dealer.**

- **Replacing tires with those not originally specified by NISSAN could affect the proper operation of the TPMS.**
- **NISSAN recommends using only Genuine NISSAN Emergency Tire Sealant provided with your vehicle. Other tire sealants may damage the valve stem seal which can cause the tire to lose air pressure. It is recommended you visit a NISSAN dealer as soon as possible after using tire repair sealant.**
- **To help avoid serious personal injury or death, when checking your tire pressure, either as part of routine maintenance or because of a TPMS alert, please check the pressure in all of your tires. Driving on underinflated tires can cause tire failure and interfere with the proper operation of other vehicle systems.**

REPAIRING FLAT TIRE

Basic information

⚠ WARNING

- **After using Genuine NISSAN Emergency Tire Sealant to repair a minor tire puncture, do not drive the vehicle at speeds faster than 50 MPH (80 km/h).**
- **Immediately after using Genuine NISSAN Emergency Tire Sealant to repair a minor tire puncture, take your vehicle to inspect, and repair or replace the tire. It is recommended you visit a NISSAN dealer for this service. The Genuine NISSAN Emergency Tire Sealant cannot permanently seal a punctured tire. Continuing operation of the vehicle without a permanent tire repair can lead to a crash.**
- **NISSAN recommends using only Genuine NISSAN Emergency Tire Sealant provided with your vehicle. Other tire sealants may damage the valve stem seal which can cause the tire to lose air pressure. It is recommended you visit a NISSAN dealer as soon as possible after using tire repair sealant.**

This vehicle does not have a spare tire. The emergency tire puncture repair kit (Emergency Tire Sealant) is supplied with the vehicle instead of a spare tire. It can be used to temporarily repair minor tire punctures.

If possible, have the vehicle towed to a facility that can repair or replace the flat tire. Using the emergency tire puncture repair kit may cause a malfunction of the tire pressure sensor and cause the low tire pressure warning light to illuminate.

If you have a flat tire, follow the instructions below.

⚠ CAUTION

- **To avoid the emergency tire puncture repair kit being damaged during storage or use:**

- **Only use the emergency tire puncture repair kit on your vehicle. Do not use it on other vehicles.**
- **Only use the kit to inflate the tires of your vehicle and to check the vehicle's tire pressure.**
- **Only plug the compressor into a 12V DC car power point.**
- **Keep the kit free of water and dirt.**
- **Do not disassemble or modify the kit.**
- **Do not drop the kit or allow hard impacts to the kit.**

• **Do not use the emergency tire puncture repair kit under the following conditions. It is recommended you visit a NISSAN dealer or professional road assistance.**
- **when the sealant has passed its expiration date (shown on the label attached to the bottle)**
- **when the cut or the puncture is approximately 0.25 in (6 mm) or longer**
- **when the tire sidewall is damaged**
- **when the vehicle has been driven with extremely low tire pressure**
- **when the tire has come off the inside or the outside of the wheel.**
- **when the tire wheel is damaged**
- **when two or more tires are flat**

Stopping the vehicle

1. Safely move the vehicle off the road and away from traffic.
2. Turn on the hazard warning flashers.
3. Park on a level surface and apply the parking brake.
4. **Automatic Transmission models:**

   Push the park button to engage the P (Park) position.

   Manual Transmission models:

   Move the shift lever to the R (Reverse) position.
5. Turn off the engine.
6. Raise the hood to warn other traffic and to signal professional road assistance personnel that you need assistance.
7. Have all passengers get out of the vehicle and stand in a safe place, away from traffic and clear of the vehicle.

⚠ WARNING

Make sure the parking brake is securely applied and the manual transmission is shifted into R (Reverse) or the automatic transmission into P (Park).

- **Never repair tires when the vehicle is on a slope, ice or slippery areas. This is hazardous.**
- **Never repair tires if oncoming traffic is close to your vehicle. Wait for professional road assistance.**

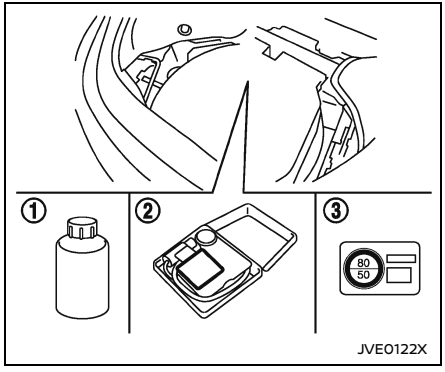

Getting emergency tire puncture repair kit

Take out the emergency tire puncture repair kit located under the cargo room. The repair kit consists of the following items:

① Tire sealant bottle
② Air compressor
③ Speed restriction sticker

The stored items and their shape may differ depending on the models.

Before using emergency tire puncture repair kit

- If any foreign object (for example, a screw or nail) is embedded in the tire, do not remove it.
- Check the expiration date of the sealant (shown on the label attached to the bottle). Never use a sealant whose expiration date has passed.

Repairing tire (Type A)

⚠ WARNING

Observe the following precautions when using the tire repair compound.

- **Swallowing the compound is dangerous. Immediately drink as much water as possible and seek prompt medical assistance.**
- **Rinse well with lots of water if the compound comes into contact with skin or eyes. If irritation persists, seek prompt medical attention.**
- **Keep the repair compound out of the reach of children.**
- **The emergency repair compound may cause a malfunction of the tire pressure sensors and cause the low tire pressure warning light to illuminate. Have the tire pressure sensor replaced as soon as possible.**

NOTE:
Do not remove any nails or screws that have penetrated the tire when performing repairs.

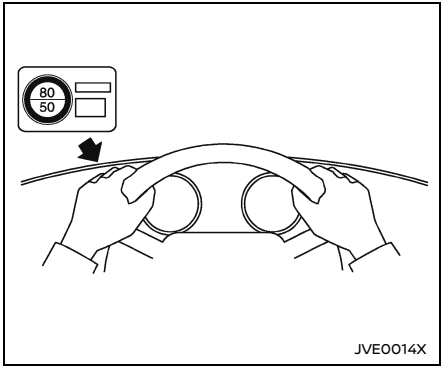

1. Take out the speed restriction sticker from the air compressor, then put it in a location where the driver can see it while driving.

⚠ CAUTION

Do not put the speed restriction label on the steering wheel pad, the speedometer or the warning light locations.

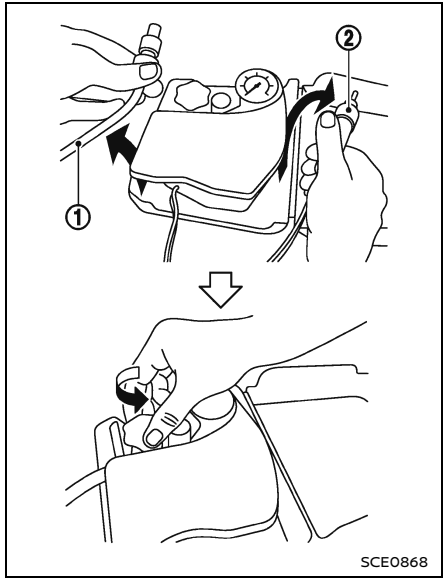

2. Take the hose ① and the power plug ② out of the air compressor. Remove the cap of the bottle holder from the air compressor.

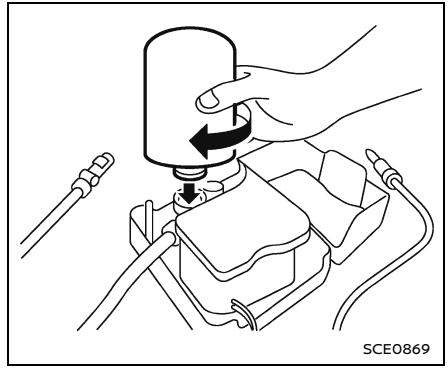

3. Remove the cap from the tire sealant bottle, and screw the bottle clockwise onto the bottle holder. (Leave the bottle seal intact. Screwing the bottle onto the bottle holder will pierce the seal of the bottle.)
4. Remove the cap from the tire valve on the flat tire.

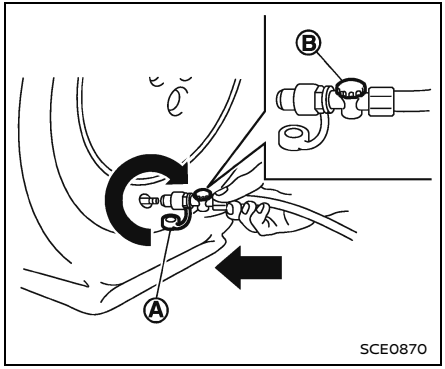

5. Remove the protective cap Ⓐ of the hose and screw the hose securely onto the tire valve. Make sure that the pressure release valve Ⓑ is securely tightened. Make sure that the air compressor switch is in the OFF (O) position, and then insert its power plug into the power outlet in the vehicle.

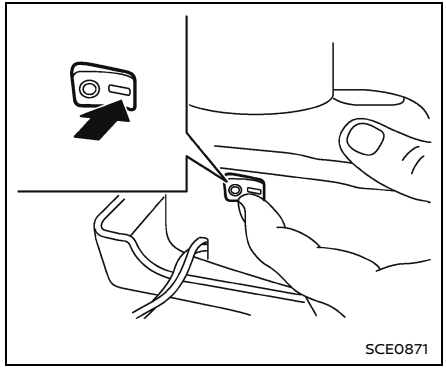

6. Push the ignition switch to the "ACC" position. Then turn the compressor switch to the ON (–) position and inflate the tire up to the pressure that is specified on the tire and loading information label affixed to the driver's side center pillar if possible, or to the minimum of 26 psi (180 kPa). Turn the air compressor off briefly in order to check the tire pressure with the pressure gauge.

   If the tire is inflated to higher than the specified pressure, lower the tire pressure by releasing air with the pressure release valve.

NOTE:

The compressor tire pressure gauge may show a pressure reading of 87 psi (600 kPa) for about 30 seconds while inflating the tire. The pressure gauge is indicating the pressure inside the sealant can. When the sealant has been injected into the tire the pressure gauge will drop and indicate actual tire pressure.

⚠ WARNING

- **To avoid serious personal injury while using the emergency tire puncture repair kit:**
  - **Securely tighten the compressor hose to the tire valve. Failure to do so can cause the sealant to spray into the air and get into your eyes or on the skin.**
- **Do not stand directly beside the damaged tire while it is being inflated because of the risk of the rupture. If there are any cracks or bumps, turn the compressor off immediately.**

If the tire pressure does not increase to **26 psi (180 kPa) within 10 minutes**, the tire may be seriously damaged and

the tire cannot be repaired with this tire repair kit. It is recommended you visit a NISSAN dealer for servicing.

7. When the tire pressure is at the specified amount, turn the air compressor off. If the pressure cannot be inflated to the specified amount, the air compressor can be turned off at the minimum of 26 psi (180 kPa). Remove the power plug from the power outlet and quickly remove the hose from the tire valve. Attach the protective cap and valve cap. Properly stow the emergency tire puncture repair kit under the cargo room.

⚠ CAUTION

To avoid serious personal injury when stowing the emergency tire puncture repair kit:

- **Keep the sealant bottle screwed into the compressor. Failure to do so can cause the sealant to spray into the air and get into your eyes or on the skin.**

8. Immediately drive the vehicle for 10 minutes or 2 miles (3 km) at a speed of 50 MPH (80 km/h) or less.
9. After driving, make sure that the air compressor switch is in the OFF position, then screw the hose securely onto the tire valve. Check the tire pressure with the pressure gauge. The temporary repair is completed if the tire pressure does not drop.

   Make sure the pressure is adjusted to the pressure that is specified on the tire and loading information label before driving.
10. If the tire pressure drops, repeat the steps from 5 to 9. If the pressure drops again or under 19 psi (130 kPa), **the tire cannot be repaired with this tire repair kit.** It is recommended you visit a NISSAN dealer for this servicing.

    The sealant bottle and hose can not be reused to repair another punctured tire. It is recommended you visit a NISSAN dealer to purchase replacements.

Repairing tire (Type B)

⚠ WARNING

Observe the following precautions when using the emergency tire puncture repair kit.

- **Swallowing the compound is dangerous. Immediately drink as much water as possible and seek prompt medical assistance.**
- **Rinse well with lots of water if the compound comes into contact with skin or eyes. If irritation persists, seek prompt medical attention.**
- **Keep the repair compound out of the reach of children.**
- **The emergency repair compound may cause a malfunction of the tire pressure sensors and cause the low tire pressure warning light to illuminate. Have the tire pressure sensor replaced as soon as possible.**

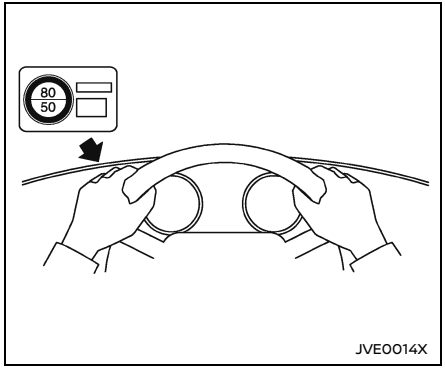

1. Take out the speed restriction sticker from the air compressor, then put it in a location where the driver can see it while driving.

⚠ CAUTION

Do not put the speed restriction label on the steering wheel pad, the speedometer or the warning light locations.

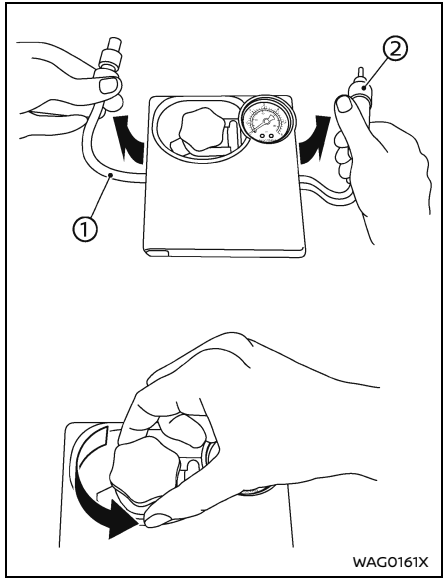

2. Take the hose ① and the power plug ② out of the air compressor. Remove the cap of the bottle holder from the air compressor.

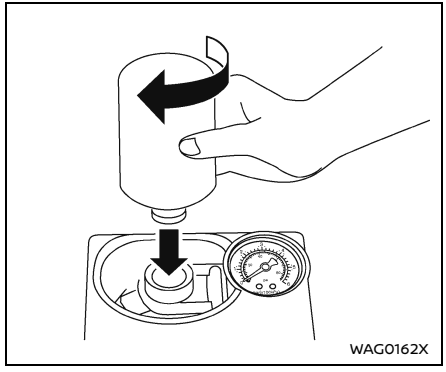

3. Remove the cap of the tire sealant bottle, and screw the bottle clockwise onto the bottle holder. (Leave the bottle seal intact. Screwing the bottle onto the bottle holder will pierce the seal of the bottle.)
4. Remove the cap of the tire valve on the flat tire.

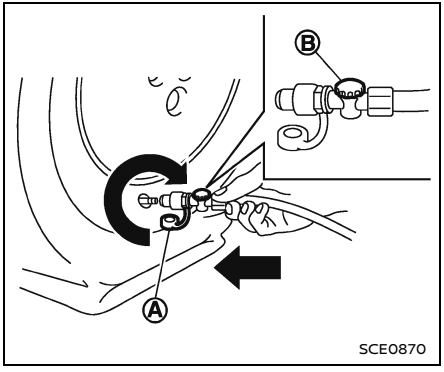

5. Remove the protective cap Ⓐ of the hose and screw the hose securely onto the tire valve. Make sure that the pressure release valve Ⓑ is securely tightened. Make sure that the air compressor switch is in the OFF (○) position, and then insert its power plug into the power outlet in the vehicle.

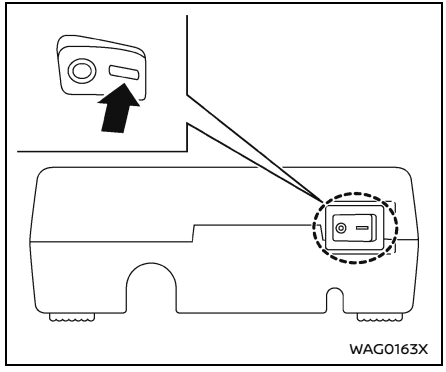

6. Place the ignition switch in the "ACC" position. Then turn the compressor switch to the ON (–) position and inflate the tire up to the pressure that is specified on the Tire and Loading Information label affixed to the driver's side center pillar if possible, or to the minimum of 26 psi (180 kPa). Turn the air compressor off briefly in order to check the tire pressure with the pressure gauge.

   If the tire is inflated to higher than the specified pressure, adjust the tire pressure by releasing air with the pressure release valve. The cold tire pressures are shown on the Tire and Loading Information label affixed to the driver's side center pillar.

⚠ CAUTION

- **An incomplete connection between the hose and tire valve causes air leakage or sealant scatter.**
- **Do not stand directly beside the damaged tire while it is being inflated because of the risk of the rupture. If there are any cracks or bumps, turn the compressor off immediately.**
- **There is a possibility that the pressure reaches 87 psi (600 kPa) while the tire is being inflated, but it is normal condition. Usually the pressure will drop in about 30 seconds.**
- **Do not operate the compressor for more than 10 minutes.**

If the tire pressure does not increase to **26 psi (180 kPa) within 10 minutes**, the tire may be seriously damaged and **the tire cannot be repaired with this tire puncture repair kit.** It is recommended that you contact a NISSAN certified dealer.

7. When the tire pressure is reaching the specified pressure or is at the minimum of 26 psi (180 kPa), turn the air compressor off. Remove the power plug from the power outlet and quickly remove the hose from the tire valve. Attach the protective cap and valve cap.

⚠ CAUTION

Leave the tire sealant bottle on the bottle holder in order to prevent sealant from spilling out.

8. Immediately drive the vehicle for 10 minutes or 2 miles (3 km) at a speed of 50 MPH (80 km/h) or less.
9. After driving, make sure that the air compressor switch is in the OFF (O) position, then screw the hose securely onto the tire valve. Check the tire pressure with the pressure gauge.

If the tire pressure drops under 19 psi (130 kPa):

The tire cannot be repaired with this tire puncture repair kit. It is recommended that you contact a NISSAN certified dealer.

If the tire pressure is 19 psi (130 kPa) or more but less than the specified pressure:

Turn the compressor switch to the ON (—) position and inflate the tire up to the specified pressure. Then repeat the steps from 8.

If the pressure drops again, **the tire cannot be repaired with this tire puncture repair kit.** It is recommended that you contact a NISSAN certified dealer.

When the tire pressure is the specified pressure:

The temporary repair is completed.

It is recommended that you visit a NISSAN certified dealer for tire repair/replacement as soon as possible.

⚠ CAUTION

Do not reuse the tire sealant bottle or the hose.

For a new tire sealant bottle and hose, it is recommended that you contact a NISSAN certified dealer.

After repairing tire

It is recommended you visit a NISSAN dealer for tire repair/replacement as soon as possible.

⚠ WARNING

- **After using Genuine NISSAN Emergency Tire Sealant to repair a minor tire puncture, do not drive the vehicle at speeds faster than 50 MPH (80 km/h).**
- **Immediately after using Genuine NISSAN Emergency Tire Sealant to repair a minor tire puncture, take your vehicle to inspect, and repair or replace the tire. It is recommended you visit a NISSAN dealer for this service. The Genuine NISSAN Emergency Tire Sealant cannot permanently seal a punctured tire. Continuing operation of the vehicle without a permanent tire repair can lead to a crash.**
- **Do not inject any liquid or aerosol tire sealant into the tires, as this may cause a malfunction of the tire pressure sensors.**
- **If you used the Genuine NISSAN Emergency Tire Sealant to repair a minor tire puncture, it is recommended that you visit a NISSAN dealer to replace the TPMS sensor in addition to repairing or replacing the tire.**

- **NISSAN recommends using only Genuine NISSAN Emergency Tire Sealant provided with your vehicle. Other tire sealants may damage the valve stem seal which can cause the tire to lose air pressure. It is recommended you visit a NISSAN dealer as soon as possible after using tire repair sealant.**

JUMP STARTING

To start your engine with a booster battery, the instructions and precautions below must be followed.

⚠ WARNING

- **If done incorrectly, jump starting can lead to a battery explosion, resulting in severe injury or death. It could also damage your vehicle.**
- **Explosive hydrogen gas is always present in the vicinity of the battery. Keep all sparks and flames away from the battery.**
- **Do not allow battery fluid to come into contact with eyes, skin, clothing or painted surfaces. Battery fluid is a corrosive sulphuric acid solution which can cause severe burns. If the fluid should come into contact with anything, immediately flush the contacted area with water.**
- **Keep the battery out of the reach of children.**
- **The booster battery must be rated at 12 volts. Use of an improperly rated battery can damage your vehicle.**
- **Whenever working on or near a battery, always wear suitable eye protectors (for example, goggles or industrial safety spectacles) and remove rings, metal bands, or any other jewelry. Do not lean over the battery when jump starting.**
- **Do not attempt to jump start a frozen battery. It could explode and cause serious injury.**
- **Your vehicle has an automatic engine cooling fan. It could come on at any time. Keep hands and other objects away from it.**

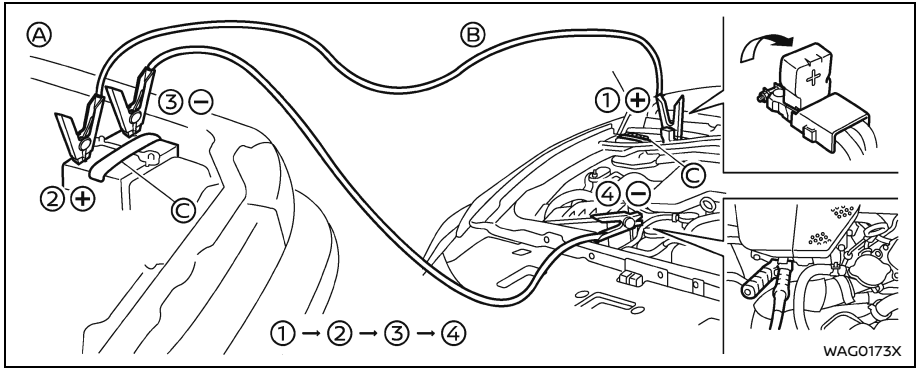

⚠ WARNING

Always follow the instructions below. Failure to do so could result in damage to the charging system and cause personal injury.

NOTE:
For automatic transmission models, the malfunction Indicator Light (MIL) may be lit by detecting low voltage. This does not affect the driving function. When the voltage returns to the normal value (>12V) or the engine is started 3 times or more, the MIL turns off.

1. If the booster battery is in another vehicle Ⓐ, position the two vehicles (Ⓐ and Ⓑ) to bring their batteries into close proximity to each other.

   Do not allow the two vehicles to touch.
2. Apply parking brake. Push the park button to engage the P (Park) position (Automatic transmission models). Move the shift lever to the N (Neutral) position (Manual transmission models). Switch off all unnecessary electrical systems (light, heater, air conditioner, etc.).
3. Remove vent caps on the battery (if so equipped). Cover the battery with a firmly wrung out moist cloth Ⓒ to reduce explosion hazard.
4. Connect jumper cables in the sequence as illustrated (① → ② → ③ → ④).

⚠ CAUTION

- **Always connect positive (+) to positive (+) and negative (–) to body ground (as illustrated) — not to the battery.**
- **Make sure the jumper cables do not touch moving parts in the engine compartment and that clamps do not contact any other metal.**

5. Start the engine of the booster vehicle Ⓐ and let it run for a few minutes.
6. Keep the engine speed of the booster vehicle Ⓐ at about 2,000 rpm, and start the engine of the vehicle being jump started Ⓑ.

⚠ CAUTION

Do not keep the starter motor engaged for more than 10 seconds. If the engine does not start right away, push the ignition switch to the OFF position and wait 10 seconds before trying again.

7. After starting your engine, carefully disconnect the negative cable and then the positive cable (④ → ③ → ② → ①).
8. Replace the vent caps (if so equipped). Be sure to dispose of the cloth used to cover the vent holes as it may be contaminated with corrosive acid.
9. Put the battery cover on.

PUSH STARTING

Do not attempt to start the engine by pushing.

⚠ CAUTION

- **Automatic transmission models cannot be push-started or tow-started. Attempting to do so may cause transmission damage.**
- **Three way catalyst equipped models should not be started by pushing since the three way catalyst may be damaged.**
- **Never try to start the vehicle by towing it; when the engine starts, the forward surge could cause the vehicle to collide with the tow vehicle.**

IF YOUR VEHICLE OVERHEATS

⚠ CAUTION

- **Do not continue to drive if your vehicle overheats. Doing so could cause engine damage or a vehicle fire.**
- **To avoid the danger of being scalded, do not open the hood if steam is coming out.**

  Never remove the radiator or coolant reservoir cap when the radiator is hot. If the cap is removed under these conditions, pressurized hot water/coolant may spurt out, possibly causing serious injury.

If your vehicle is overheating (indicated by an extremely high temperature gauge reading), or if you feel a lack of engine power, detect abnormal noise, etc., take the following steps:

1. Move the vehicle safely off the road, apply the parking brake and push the park button to shift to the P (Park) position (Automatic transmission models). Move the shift lever to the N (Neutral) position (Manual transmission models).

   Do not stop the engine.

2. Turn off the air conditioner. Open all the windows, move the heater or air conditioner temperature control to maximum hot and fan control to high speed. The heater core in your vehicle is just like a miniature engine radiator and will provide an extra cooling surface to help reduce engine temperature.
3. If engine overheating is caused by climbing a long hill on a hot day, run the engine at a fast idle (approximately 1,500 rpm) until the temperature gauge indication returns to normal.
4. If the temperature does not drop or continues to increase stop the engine immediately.
5. Being cautious of traffic, step out of the vehicle and, from a safe distance, look and listen for steam or coolant escaping from the radiator or under the engine. If you see steam or leaking coolant stand clear to avoid being burned and shut off your engine immediately to allow it to cool. Do not open the hood until no steam or coolant can be seen.

⚠ WARNING

If steam or water is coming from the engine, stand clear to prevent getting burned.

6. Visually check if the cooling fan is running. The radiator hoses and radiator should not leak water. If coolant is leaking or the cooling fan does not run, stop the engine.

⚠ WARNING

Be careful not to allow your hands, hair, jewelry or clothing to come into contact with, or get caught in, engine belts or the engine cooling fan. The engine cooling fan can start at any time.

7. After the engine cools down, check the coolant level in the reservoir with the engine running. Add coolant to the reservoir if necessary. Have your vehicle repaired. It is recommended you visit a NISSAN dealer for this service.

BASIC INFORMATION

When towing your vehicle, all State (Provincial in Canada) and local regulations for towing must be followed. Incorrect towing equipment could damage your vehicle. Towing instructions are available from a NISSAN dealer. Local service operators are familiar with the applicable laws and procedures for towing. To assure proper towing and to prevent accidental damage to your vehicle, NISSAN recommends that you have a service operator tow your vehicle. It is advisable to have the service operator carefully read the following precautions.

⚠ WARNING

- **Never ride in a vehicle that is being towed.**
- **Never get under your vehicle after it has been lifted by a tow truck.**

⚠ CAUTION

- **When towing, make sure that the transmission, axles, steering system and drivetrain are in working condition. If any unit is damaged, dollies must be used.**

- **Always attach safety chains before towing.**

For information about towing your vehicle behind a recreational vehicle (RV), see "Flat towing" (P.407) of this manual.

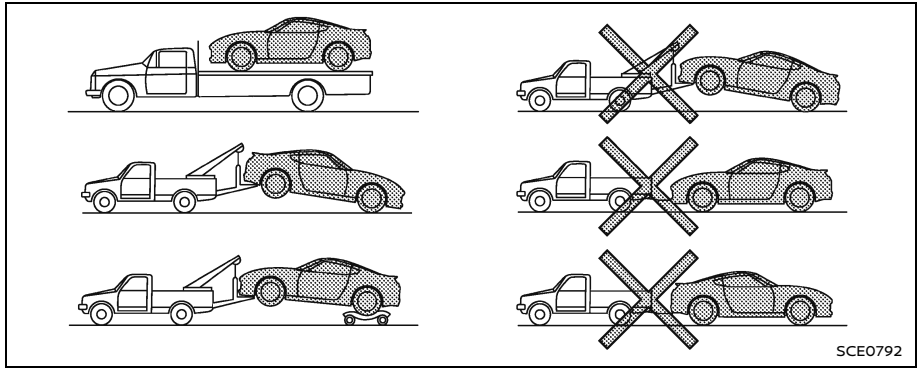
SCE0792

TOWING AUTOMATIC TRANSMISSION RECOMMENDED BY NISSAN (except for NISMO models)

NISSAN recommends that your vehicle be towed with the driving (rear) wheels off the ground or place the vehicle on a flat bed truck as illustrated.

NOTE:
If the battery is completely drained the transmission will not manually shift to other positions.

⚠ CAUTION

- **Never tow automatic transmission models with the rear wheels on the ground or four wheels on the ground (forward or backward), as this may cause serious and expensive damage to the drivetrain. If it is necessary to tow the vehicle with the front wheels raised, always use towing dollies under the rear wheels.**

- **When towing rear wheel drive models with the front wheels on the ground or on towing dollies: Push the ignition switch to the ACC or ON position, and secure the steering wheel in a straight-ahead position with a rope or similar device.**

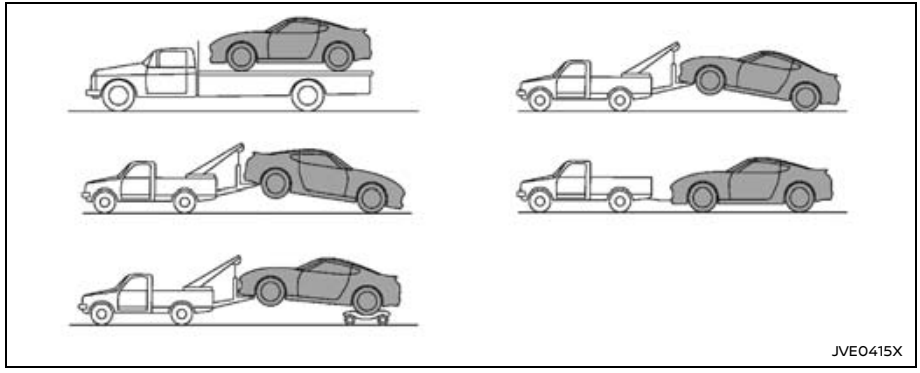

TOWING MANUAL TRANSMISSION RECOMMENDED BY NISSAN (except for NISMO models)

NISSAN recommends that your vehicle be towed with the driving (rear) wheels off the ground or place the vehicle on a flat bed truck as illustrated.

⚠ CAUTION

If you have to tow manual transmission models with the rear wheels on the ground (if you do not use towing dollies) or four wheels on the ground:

- **Push the ignition switch to the ON position and turn off all accessories.**
- **Always release the parking brake.**
- **Move the transmission shift lever to the N (Neutral) position.**
- **Observe the following restricted towing speeds and distances for manual transmission models only:**
  - **Rear wheels on the ground:**
    Speed: Below 50 MPH (80 km/h)
    Distance: Less than 50 miles (80 km)

– **Four wheels on the ground:**
  Speed: Below 70 MPH (112 km/h)
  Distance: Less than 500 miles (800 km)

- **If the speed or distance must necessarily be greater, remove the propeller shaft before towing to prevent damage to the drive-train.**

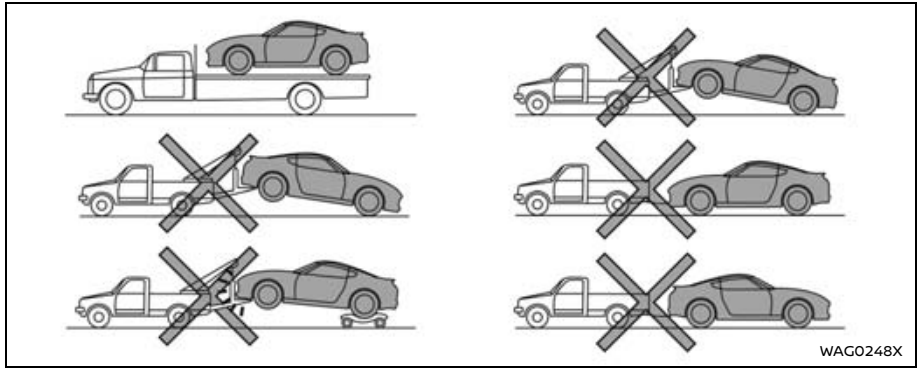

TOWING RECOMMENDED BY NISSAN (NISMO models)

⚠ CAUTION

Do not tow NISMO models with any wheel on the ground, or with the front or rear wheels raised, because this may cause damage to the front bumper with an aerodynamic splitter, rear bumper with an aerodynamic diffuser or grille.

NISSAN recommends that you place the vehicle on a flatbed truck as illustrated.

VEHICLE RECOVERY (freeing a stuck vehicle)

Basic information

⚠ WARNING

To avoid vehicle damage, serious personal injury or death when recovering a stuck vehicle:

- **Contact a professional towing service to recover the vehicle if you have any questions regarding the recovery procedure.**

- **Tow chains or cables must be attached only to main structural members of the vehicle.**
- **Do not use the vehicle tie-downs to tow or free a stuck vehicle.**
- **Only use devices specifically designed for vehicle recovery and follow the manufacturer's instructions.**
- **Be careful not to damage the grille when towing your vehicle.**
- **Always pull the recovery device straight out from the front of the vehicle. Never pull at an angle.**
- **Route recovery devices so they do not touch any part of the vehicle except the attachment point.**

If your vehicle is stuck in sand, snow, mud, etc., use a tow strap or other device designed specifically for vehicle recovery. Always follow the manufacturer's instructions for the recovery device.

Rocking a stuck vehicle

If your vehicle is stuck in sand, snow, mud, etc., use the following procedure:

1. Turn off the Vehicle Dynamic Control (VDC) system or select the Traction mode (for NISMO models).
2. Make sure the area in front and behind the vehicle is clear of obstructions.
3. Turn the steering wheel right and left to clear an area around the front tires.
4. Slowly rock the vehicle forward and backward.
   - Shift back and forth between R (Reverse) and D (Drive) (automatic transmission models) or 1st and R (Reverse) (manual transmission models).
   - Apply the accelerator as little as possible to maintain the rocking motion.
   - Release the accelerator pedal before shifting between R (Reverse) and D (Drive) (automatic transmission models) or 1st and R (Reverse) (manual transmission models).
   - Do not spin the tires above 35 MPH (55 km/h).
5. If the vehicle cannot be freed after a few tries, contact a professional towing service to remove the vehicle.

⚠ WARNING

- **Stand clear of a stuck vehicle.**
- **Do not spin your tires at high speed. This could cause them to explode and result in serious injury. Parts of your vehicle could also overheat and be damaged.**

7 Appearance and care

Cleaning exterior 318
- Basic information 318
- Washing 318
- Waxing 319
- Removing spots 320
- Underbody 320
- Glass 320
- Wheels 320
- Chrome parts 321
- Tire dressing 321

Cleaning interior 321
- Basic information 321
- Air fresheners 322
- Floor mats 323
- Seat belts 324

Corrosion protection 325
- Most common factors contributing to vehicle corrosion 325
- Environmental factors influence the rate of corrosion 325
- To protect your vehicle from corrosion 325

BASIC INFORMATION

In order to maintain the appearance of your vehicle, it is important to take proper care of it.

To protect the paint surface, wash your vehicle as soon as you can:

- after a rainfall to prevent possible damage from acid rain
- after driving on coastal roads
- when contaminants such as soot, bird droppings, tree sap, metal particles or bugs get on the paint surface
- when dust or mud builds up on the surface

Whenever possible, store or park your vehicle inside a garage or in a covered area.

When it is necessary to park outside, park in a shady area or protect the vehicle with a body cover.

Be careful not to scratch the paint surface when putting on or removing the body cover.

WASHING

Basic information

Wash dirt off the vehicle with a wet sponge and plenty of water. Clean the vehicle thoroughly using a mild soap, a special vehicle soap or general purpose dishwashing liquid mixed with clean, lukewarm (never hot) water.

⚠ WARNING

- **Do not wash the engine compartment. Doing so may cause a failure in engine starting or a malfunction. The possibility of water intrusion into electrical connections may result in a short circuit or electrical components to malfunction.**

⚠ CAUTION

- **Do not concentrate water spray directly on the sonar sensors on the bumper as this will result in damage to the sensors.**
- **Do not use pressure washers capable of spraying water over 1,200 psi (8,274 kPa) to wash your vehicle. Use of high-pressure washers over 1,200 psi (8,274 kPa) can result in damage to or removal of paint or graphics. Avoid using a high-pressure washer closer than 12 in (30 cm) to the vehicle. Always use a wide-angle nozzle only, keep the nozzle moving and do not concentrate the water spray on any one area.**
- **Do not use car washes that use acid in the detergent. Some car washes, especially brushless ones, use some acid for cleaning. The acid may react with some plastic vehicle components, causing them to crack. This could affect their appearance, and also could cause them not to function properly. Always check with your car wash to confirm that acid is not used.**
- **Do not wash the vehicle with strong household soap, strong chemical detergents, gasoline or solvents.**

- **Do not wash the vehicle in direct sunlight or while the vehicle body is hot, as the surface may become water-spotted.**
- **Avoid using tight-napped or rough cloths, such as washing mitts. Care must be taken when removing caked-on dirt or other foreign substances so the paint surface is not scratched or damaged.**
- **For models with decorative sticker, observe the following:**
  - **Wash dirt off the vehicle with a wet sponge and plenty of water. Then wipe the vehicle gently using a soft cloth.**
  - **Do not apply direct water pressure, such as high-pressure sprayer, on the vehicle body around the sticker. This may cause the sticker edges to peel away or come off from the vehicle.**

Rinse the vehicle thoroughly with plenty of clean water.

Inside flanges, seams and folds on the doors, hatches and hood are particularly vulnerable to the effects of road salt. Therefore, these areas must be regularly cleaned. Make sure that the drain holes in the lower edge of the door are open. Spray water under the body and in the wheel wells to loosen the dirt and wash away road salt.

Avoid leaving water spots on the paint surface by using a damp chamois to dry the vehicle.

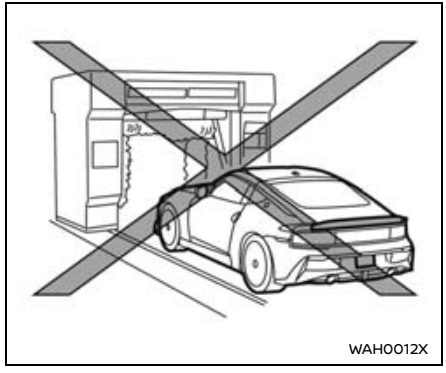
WAH0012X

NISMO models

CAUTION

Do not use an automatic car wash for NISMO models. The rear spoiler and the license plate may be damaged.

WAXING

Regular waxing protects the paint surface and helps retain new vehicle appearance. Polishing is recommended to remove built-up wax residue and to avoid a weathered appearance before reapplying wax.

A NISSAN dealer can assist you in choosing the proper product.

- Wax your vehicle only after a thorough washing. Follow the instructions supplied with the wax.
- Do not use a wax containing any abrasives, cutting compounds or cleaners that may damage the vehicle finish.

Machine compound or aggressive polishing on a base coat/clear coat paint finish may dull the finish or leave swirl marks.

⚠ CAUTION

NISSAN does not recommend to apply water repellent on mirror.

REMOVING SPOTS

Remove tar and oil spots, industrial dust, insects, and tree sap as quickly as possible from the paint surface to avoid lasting damage or staining. Special cleaning products are available at a NISSAN dealer or any automotive accessory stores. It is recommended that you visit a NISSAN dealer for these products.

UNDERBODY

In areas where road salt is used in winter, the underbody must be cleaned regularly. This will prevent dirt and salt from building up and causing the acceleration of corrosion on the underbody and suspension. Before the winter period and again in the spring, the underseal must be checked and, if necessary, re-treated.

GLASS

Use glass cleaner to remove smoke and dust film from the glass surfaces. It is normal for glass to become coated with a film after the vehicle is parked in the hot sun. Glass cleaner and a soft cloth will easily remove this film.

⚠ CAUTION

When cleaning the inside of the windows, do not use sharp-edged tools, abrasive cleaners or chlorine-based disinfectant cleaners. They could damage the electrical conductors, radio antenna elements or rear window defroster elements.

WHEELS

Basic information

Wash the wheels when washing the vehicle to maintain their appearance.

- Clean the inner side of the wheels when the wheel is changed or the underside of the vehicle is washed.
- Inspect wheel rims regularly for dents or corrosion. Such damage may cause loss of pressure or poor seal at the tire bead.
- NISSAN recommends that the road wheels be waxed to protect against road salt in areas where it is used during winter.

⚠ CAUTION

Do not use abrasive cleaners when washing the wheels.

Aluminum alloy wheels

Wash regularly with a sponge dampened in a mild soap solution, especially during winter months in areas where road salt is used. Salt could discolor the wheels if not removed.

⚠ CAUTION

Follow the directions below to avoid staining or discoloring the wheels:

- **Do not use a cleaner that uses strong acid or alkali contents to clean the wheels.**

- **Do not apply wheel cleaners to the wheels when they are hot. The wheel temperature should be the same as ambient temperature.**
- **Rinse the wheel to completely remove the cleaner within 15 minutes after the cleaner is applied.**

CHROME PARTS

Clean chrome parts regularly with a non-abrasive chrome polish to maintain the finish.

TIRE DRESSING

NISSAN does not recommend the use of tire dressings. Tire manufacturers apply a coating to the tires to help reduce discoloration of the rubber. If a tire dressing is applied to the tires, it may react with the coating and form a compound. This compound may come off the tire while driving and stain the vehicle paint.

If you choose to use a tire dressing, take the following precautions:

- Use a water-based tire dressing. The coating on the tire dissolves more easily with an oil-based tire dressing.
- Apply a light coat of tire dressing to help prevent it from entering the tire tread/grooves (where it would be difficult to remove).
- Wipe off excess tire dressing using a dry towel. Make sure the tire dressing is completely removed from the tire tread/grooves.
- Allow the tire dressing to dry as recommended by tire dressing manufacturer.

CLEANING INTERIOR

BASIC INFORMATION

Occasionally remove loose dust from the interior trim, plastic parts and seats using a vacuum cleaner or soft bristled brush. Wipe the vinyl and leather surfaces with a clean, soft cloth dampened in mild soap solution, then wipe clean with a dry soft cloth.

Regular care and cleaning is required in order to maintain the appearance of the leather.

Before using any fabric protector, read the manufacturer's recommendations. Some fabric protectors contain chemicals that may stain or bleach the seat material.

Use a cloth dampened only with water, to clean the meter and gauge lens.

⚠ WARNING

- **Do not use wax or silicone based products in the interior of the vehicle. Doing so may cause damage to interior parts, electrical devices, or electronics.**

- **Do not use water or acidic cleaners (hot steam cleaners) on the seat. This can damage the seat or occupant classification sensor. This can also affect the operation of the air bag system and result in serious personal injury.**

⚠ CAUTION

- **Never use benzine, thinner, or any similar material.**
- **For cleaning, use a soft cloth, dampened with water. Never use a rough cloth, alcohol, benzine, thinner or any kind of solvent or paper towel with a chemical cleaning agent. They will scratch or cause discoloration to the lens.**
- **Do not spray any liquid such as water on the meter lens. Spraying liquid may cause the system to malfunction.**
- **Small dirt particles can be abrasive and damaging to the leather surfaces and should be removed promptly. Do not use saddle soap, car waxes, polishes, oils, cleaning fluids, solvents, detergents or ammonia-based cleaners as they may damage the leather's natural finish.**
- **Only use fabric protectors approved by NISSAN.**
- **Do not use glass or plastic cleaner on meter or gauge lens covers. It may damage the lens cover.**
- **For models with patterned seatbacks, do not apply direct pressure at high temperatures, such as with an iron, on the pattern of the seatback. This may cause the pattern to disappear from the seatback.**
- **Do not spill on or make contact with interior surfaces while handling air fresheners, aroma agents, cosmetics, sunscreen, etc. They may cause permanent discoloration, stain, crack, paint peeling, etc. depending on the ingredients. If they contact the interior surface, wipe them off immediately using a soft cloth.**
- **Do not use the chlorine-based cleaning liquid such as chlorine dioxide and hypochlorous acid, which may cause the paint peeling, corrosion, etc. If it is unavoidable to clean or sterilize interior surfaces, use less than 75% ethanol. Wipe the interior parts with a dry cloth dampened with ethanol. Wipe off ethanol completely. If you leave it uncleaned, it may cause paint peeling, discoloration, etc. Since ethanol is flammable, be careful of fire.**
- **Never use chloride solutions for cleaning aluminum decoratives (if so equipped), damage may occur.**

AIR FRESHENERS

Most air fresheners use a solvent that could affect the vehicle interior. If you use an air freshener, take the following precautions:

- Hanging-type air fresheners can cause permanent discoloration when they contact vehicle interior surfaces. Place the air freshener in a location that allows it to hang free and not contact an interior surface.

- Liquid-type air fresheners typically clip on the vents. These products can cause immediate damage and discoloration when spilled on interior surfaces.

Carefully read and follow the manufacturer's instructions before using air fresheners.

FLOOR MATS

Basic information

⚠ WARNING

To avoid potential pedal interference that may result in a collision, injury or death:

- **NEVER place a floor mat on top of another floor mat in the driver front position or install them upside down or backwards.**
- **It is recommended that you use only genuine NISSAN floor mats or equivalent floor mats that are specifically designed for use in your vehicle model and model year.**
- **Properly position the mats in the floorwell using the floor mat positioning hook. See "Floor mat installation" (P.323).**
- **Make sure the floor mat does not interfere with pedal operation.**
- **Periodically check the floor mats to make sure they are properly installed.**
- **After cleaning the vehicle interior, check the floor mats to make sure they are properly installed.**

The use of genuine NISSAN floor mats can extend the life of your vehicle carpet and make it easier to clean the interior. Mats should be maintained with regular cleaning and replaced if they become excessively worn.

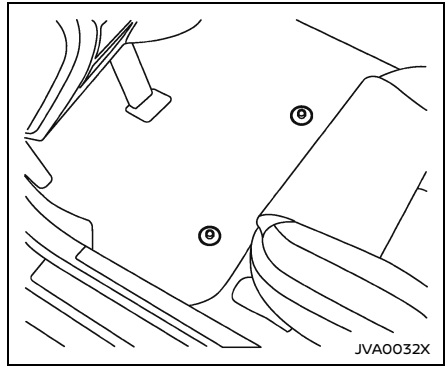

Floor mat installation

Your vehicle is equipped with floor mat positioning hook(s). The number and shape of the floor mat positioning hook(s) for each seating position varies depending on the vehicle.

When installing genuine NISSAN floor mats, follow the installation instructions provided with the floor mat and the following:

1. Position the floor mat in the floorwell so that the mat grommet holes are aligned with the hook(s).

2. Secure the grommet holes into the hook(s) and ensure that the floor mat is properly positioned.
3. Make sure the floor mat does not interfere with pedal operation. With the ignition in the OFF position and the shift position in the P (Park) position (Automatic Transmission models) or the shift lever in the N (Neutral) position (Manual Transmission models), fully apply and release all pedals. The floor mat must not interfere with pedal operation or prevent the pedal from returning to its normal position. See a NISSAN dealer for details about installing the floor mats in your vehicle.

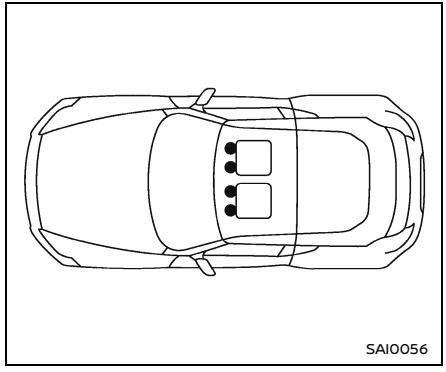

Positioning hooks

The illustration shows the location of floor mat positioning hooks.

SEAT BELTS

The seat belts can be cleaned by wiping them with a sponge dampened in a mild soap solution. Allow the belts to dry completely in the shade before using them.

See "Seat belts" (P.24).

⚠ WARNING

Do not allow wet seat belts to roll up in the retractor. NEVER use bleach, dye, or chemical solvents to clean the seat belts, since these materials may severely weaken the seat belt webbing.

MOST COMMON FACTORS CONTRIBUTING TO VEHICLE CORROSION

- The accumulation of moisture-retaining dirt and debris in body panel sections, cavities, and other areas.
- Damage to paint and other protective coatings caused by gravel and stone chips or minor traffic accidents.

ENVIRONMENTAL FACTORS INFLUENCE THE RATE OF CORROSION

Moisture

Accumulation of sand, dirt and water on the vehicle body underside can accelerate corrosion. Wet floor coverings will not dry completely inside the vehicle, and should be removed for drying to avoid floor panel corrosion.

Relative humidity

Corrosion will be accelerated in areas of high relative humidity, especially those areas where the temperatures stay above freezing where atmospheric pollution exists, or where road salt is used.

Temperature

A temperature increase will accelerate the rate of corrosion to those parts which are not well ventilated.

Air pollution

Industrial pollution, the presence of salt in the air in coastal areas, or heavy road salt use will accelerate the corrosion process. Road salt will also accelerate the disintegration of paint surfaces.

TO PROTECT YOUR VEHICLE FROM CORROSION

- Wash and wax your vehicle often to keep the vehicle clean.
- Always check for minor damage to the paint and repair it as soon as possible.
- Keep drain holes at the bottom of the doors open to avoid water accumulation.
- Check the underbody for accumulation of sand, dirt or salt. If present, wash with water as soon as possible.

⚠ CAUTION

- **NEVER remove dirt, sand or other debris from the passenger compartment by washing it out with a hose. Remove dirt with a vacuum cleaner.**
- **Never allow water or other liquids to come in contact with electronic components inside the vehicle as this may damage them.**

Chemicals used for road surface deicing are extremely corrosive. They accelerate corrosion and deterioration of underbody components such as the exhaust system, fuel and brake lines, brake cables, floor pan and fenders.

In winter, the underbody must be cleaned periodically.

For additional protection against rust and corrosion, which may be required in some areas, it is recommended you consult a NISSAN dealer.

MEMO

8 Do-it-yourself

Maintenance precautions 329
Engine compartment check locations 330
VR30DDTT engine model 331
Engine cooling system 331
Basic information 331
Checking engine coolant level 332
Changing engine coolant 333
Intercooler cooling system 333
Basic information 333
Checking intercooler coolant level 334
Changing intercooler coolant 334
Engine oil 335
Checking engine oil level 335
Changing engine oil and filter 335
Automatic Transmission Fluid (ATF) 337
Brake and clutch fluid 337
Basic information 337
Brake fluid 338
Clutch fluid (Manual transmission models) 338
Window washer fluid 339
Battery 339
Basic information 339
Jump starting 341
Drive belts 342
Spark plugs 342
Basic information 342
Replacing spark plugs 343
Air cleaner 343
Windshield wiper blades 344
Cleaning 344
Replacing 345
Brakes 345
Basic information 345
Self-adjusting brakes 345
Brake pad wear warning 345
Replacing brake disc rotors (for NISMO models) 346
Fuses 346
Engine compartment 346
Passenger compartment 347
Intelligent Key battery replacement 348
Lights 351
Basic information 351
Headlights 351
Exterior and interior lights 351
Wheels and tires 353
Basic information 353
Tire pressure 353

Tire labeling 356
Types of tires 359
Tire chains 359
Changing wheels and tires 360
Emergency tire puncture repair kit 362
Jacking up the vehicle and replacing tires 362

MAINTENANCE PRECAUTIONS

When performing any inspection or maintenance work on your vehicle, always take care to prevent serious accidental injury to yourself or damage to the vehicle. The following are general precautions which should be closely observed.

WARNING

- **Park the vehicle on a level surface, apply the parking brake securely and block the wheels to prevent the vehicle from moving. For manual transmission models, move the shift lever to N (Neutral). For automatic transmission models, push the park button to shift to the P (Park) position.**
- **Be sure the ignition switch is in the OFF or LOCK position when performing any parts replacement or repairs.**
- **Never connect or disconnect the battery or any transistorized component while the ignition switch is in the ON position.**
- **Never leave the engine or automatic transmission related component harnesses disconnected while the ignition switch is in the ON position.**
- **If you must work with the engine running, keep your hands, clothing, hair and tools away from moving fans, belts and any other moving parts.**
- **It is advisable to secure or remove any loose clothing and remove any jewelry, such as rings, watches, etc. before working on your vehicle.**
- **Always wear eye protection whenever you work on your vehicle.**
- **If you must run the engine in an enclosed space such as a garage, be sure there is proper ventilation for exhaust gases to escape.**
- **Never get under the vehicle while it is supported only by a jack. If it is necessary to work under the vehicle, support it with safety stands.**
- **Keep smoking materials, flame and sparks away from fuel tank and the battery.**
- **Your vehicle is equipped with an automatic engine cooling fan. It may come on at any time without warning, even if the ignition key is in the OFF position and the engine is not running. To avoid injury, always disconnect the negative battery cable before working near the fan.**
- **Because the fuel lines are under high pressure even when the engine is off, it is recommended you visit a NISSAN dealer for service of the fuel filter or fuel lines.**

CAUTION

- **Do not work under the hood while the engine is hot. Turn the engine off and wait until it cools down.**
- **Avoid direct contact with used engine oil and coolant. Improperly disposed engine oil, coolant, and/or other vehicle fluids can damage the environment. Always conform to local regulations for disposal of vehicle fluid.**

This “8. Do-it-yourself” section gives instructions regarding only those items

ENGINE COMPARTMENT CHECK LOCATIONS

which are relatively easy for an owner to perform.

A genuine NISSAN Service Manual is also available. (See "Owner's Manual/Service Manual order information" (P.411).)

You should be aware that incomplete or improper servicing may result in operating difficulties or excessive emissions, and could affect your warranty coverage. **If in doubt about any servicing, it is recommended you have it done by a NISSAN dealer.**

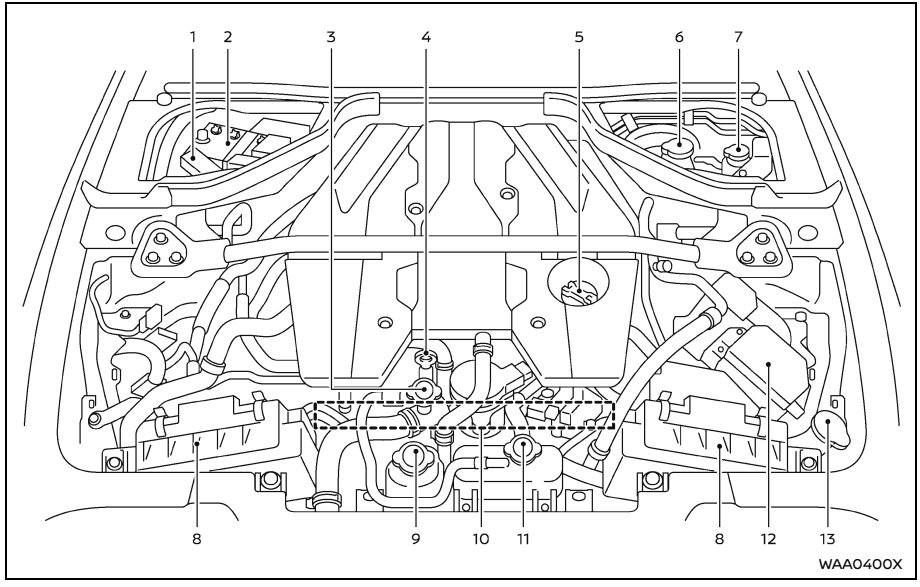

1. Fuse/fusible link holder
2. Battery
3. Radiator filler cap
4. Engine oil dipstick
5. Engine oil filler cap
6. Brake fluid reservoir
7. Clutch fluid reservoir (Manual Transmission models)
8. Air cleaner
9. Intercooler cooling reservoir
10. Drive belt location
11. Engine coolant reservoir
12. Fuse/fusible link holder

13. Window washer fluid reservoir

VR30DDTT ENGINE MODEL

NOTE:
Your vehicle may not be equipped with an engine cover.

BASIC INFORMATION

The engine cooling system is filled at the factory with a pre-diluted mixture of 50% Genuine NISSAN Long Life Anti-freeze/Coolant (blue) and 50% water to provide year-round anti-freeze and coolant protection. The antifreeze solution contains rust and corrosion inhibitors. Additional engine cooling system additives are not necessary.

⚠ WARNING

- **Never remove the radiator or coolant reservoir cap when the engine is hot. Wait until the engine and radiator cool down. Serious burns could be caused by high pressure fluid escaping from the radiator. See precautions in "If your vehicle overheats" (P.311) of this manual.**
- **The radiator is equipped with a pressure type radiator cap. To prevent engine damage, use only a genuine NISSAN radiator cap.**

⚠ CAUTION

- **Never use any cooling system additives such as radiator sealer. Additives may clog the cooling system and cause damage to the engine, transmission and/or cooling system.**

- **When adding or replacing coolant, be sure to use only Genuine NISSAN Long Life Antifreeze/Coolant (blue) or equivalent. Genuine NISSAN Long Life Antifreeze/Coolant (blue) is prediluted to provide antifreeze protection to −34°F (−37°C). If additional freeze protection is needed due to weather where you operate your vehicle, add Genuine NISSAN Long Life Antifreeze/Coolant (blue) concentrate following the directions on the container. If an equivalent coolant other than Genuine NISSAN Long Life Antifreeze/Coolant (blue) is used, follow the coolant manufacturer's instructions to maintain minimum antifreeze protection to −34°F (−37°C). The use of other types of coolant solutions other than Genuine NISSAN Long Life Antifreeze/Coolant (blue) or equivalent may damage the engine cooling system.**
- **The life expectancy of the factory-fill coolant is 105,000 miles (168,000 km) or 7 years. Mixing any other type of coolant other than Genuine NISSAN Long Life Antifreeze/Coolant (blue), (or equivalent coolant) including Genuine NISSAN Long Life Antifreeze/Coolant (green), or the use of non-distilled water will reduce the life expectancy of the factory-fill coolant. Refer to the "9. Maintenance and schedules" section of this manual for more details.**

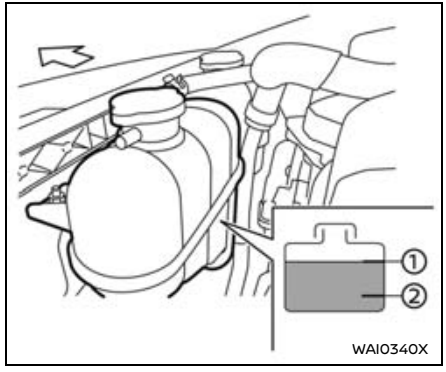

CHECKING ENGINE COOLANT LEVEL

Check the coolant level **in the reservoir when the engine is running and after it reaches normal operating temperature**. If the coolant level is below the MIN level ②, add coolant up to the MAX level ①. If the reservoir is empty, check the coolant level **in the radiator when the engine is cold**. If there is insufficient coolant in the radiator, fill the radiator with coolant up to the radiator filler cap above the radiator upper hose opening and also add it to the reservoir up to the MAX level ①. Put on the filler cap above the radiator upper hose and with the reservoir cap open, start the engine. Run the engine until it

reaches normal operating temperature. Add coolant up to the MAX level ①. Tighten the cap securely after adding engine coolant.

If the cooling system requires coolant frequently, have it checked. It is recommended you visit a NISSAN dealer for this service.

CHANGING ENGINE COOLANT

It is recommended that major cooling system repairs be performed by a NISSAN dealer. The service procedures can be found in the appropriate NISSAN Service Manual.

Improper servicing can result in reduced heater performance and engine overheating.

⚠ WARNING

- **To avoid the danger of being scalded, never change the coolant when the engine is hot.**
- **Never remove the radiator cap when the engine is hot. Serious burns could be caused by high pressure fluid escaping from the radiator.**
- **Avoid direct skin contact with used coolant. If skin contact is made, wash thoroughly with soap or hand cleaner as soon as possible.**
- **Keep coolant out of reach of children and pets.**

Engine coolant must be disposed of properly. Check your local regulations.

BASIC INFORMATION

The intercooler cooling system is filled at the factory with a pre-diluted mixture of 50% Genuine NISSAN Long Life Antifreeze/Coolant (blue) and 50% water to provide year-round anti-freeze and coolant protection. The antifreeze solution contains rust and corrosion inhibitors. Additional intercooler cooling system additives are not necessary.

⚠ WARNING

- **Never remove the coolant reservoir cap when the engine is hot. Wait until the engine cools down. Serious burns could be caused by high pressure fluid escaping from the coolant reservoir.**
- **The intercooler reservoir is equipped with a pressure type cap. To prevent engine and intercooler damage, use only a genuine NISSAN intercooler reservoir cap.**

⚠ CAUTION

- **Never use any additives in the coolant such as radiator sealer in the cooling system. This may cause damage to the intercooler.**
- **When adding or replacing coolant, be sure to use only Genuine NISSAN Long Life Antifreeze/Coolant (blue) or equivalent. Genuine NISSAN Long Life Antifreeze/Coolant (blue) is prediluted to provide antifreeze protection to –34°F (–37°C). If additional freeze protection is needed due to weather where you operate your vehicle, add Genuine NISSAN Long Life Antifreeze/Coolant (blue) concentrate following the directions on the container. If an equivalent coolant other than Genuine NISSAN Long Life Antifreeze/Coolant (blue) is used, follow the coolant manufacture's instructions to maintain minimum antifreeze protection to –34°F (–37°C). The use of other types of coolant solutions other than Genuine NISSAN Long Life Antifreeze/Coolant (blue) or equivalent may damage the Intercooler cooling system.**

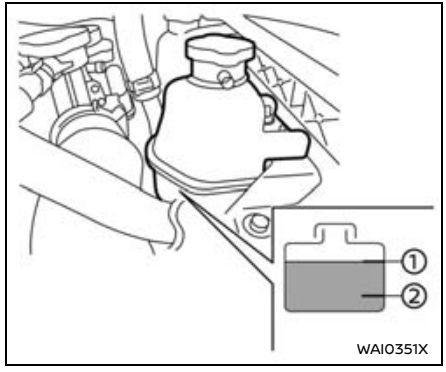

CHECKING INTERCOOLER COOLANT LEVEL

Check the coolant level in the reservoir when the engine is cold. If the coolant level is below the MIN level ②, add coolant to the MAX level ①.

If the intercooler cooling system frequently requires coolant, have it checked. It is recommended you visit a NISSAN dealer for this service.

CHANGING INTERCOOLER COOLANT

Intercooler coolant is maintenance-free.

If replacement is required, it is recommended you visit a NISSAN dealer for this service.

Improper servicing can result in intercooler overheating.

⚠ WARNING

- **To avoid the danger of being scalded, never change the coolant when the engine is hot.**
- **Never remove the cap when the engine is hot. Serious burns could be caused by high pressure fluid escaping from the intercooler cooling reservoir.**
- **Avoid direct skin contact with used coolant. If skin contact is made, wash thoroughly with soap or hand cleaner as soon as possible.**
- **Keep coolant out of the reach of children and pets.**

Intercooler coolant must be disposed of properly. Check your local regulations.

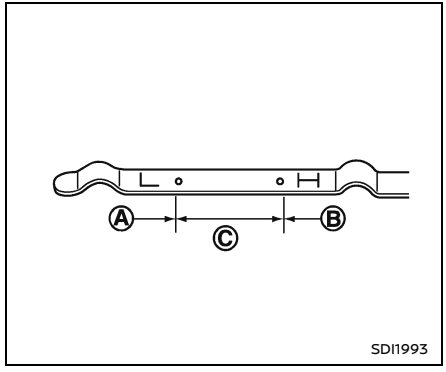

CHECKING ENGINE OIL LEVEL

1. Park the vehicle on a level surface and apply the parking brake.
2. Run the engine until it reaches operating temperature.
3. Turn off the engine. **Wait more than 15 minutes for the oil to drain back into the oil pan.**
4. Remove the dipstick and wipe it clean. Reinsert it all the way.
5. Remove the dipstick again and check the oil level. It should be within the range Ⓒ. If the oil level is below Ⓐ, remove the oil filler cap and pour recommended oil through the opening. **Do not overfill Ⓑ.**
6. Recheck oil level with the dipstick.

It is normal to add some oil between oil maintenance intervals or during the break-in period, depending on the severity of operating conditions.

⚠ CAUTION

Oil level should be checked regularly. Operating the engine with an insufficient amount of oil can damage the engine, and such damage is not covered by warranty.

CHANGING ENGINE OIL AND FILTER

Vehicle set-up

1. Park the vehicle on a level surface and apply the parking brake.
2. Run the engine until it reaches operating temperature.
3. Turn the engine off and wait more than 15 minutes.
4. Raise and support the vehicle using a suitable floor jack and safety jack stands.
   - Place the safety jack stands under the vehicle jack-up points.
   - A suitable adapter should be attached to the jack stand saddle.
5. Remove the engine undercover.
   - Remove the bolts and clips that hold the undercover in place.

⚠ CAUTION

Make sure the correct lifting and support points are used to avoid vehicle damage.

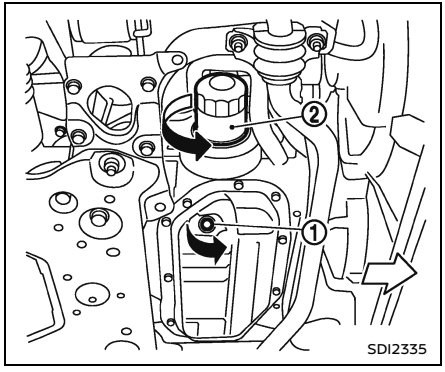

Engine oil and filter

1. Place a large drain pan under the drain plug.
2. Remove the oil filler cap.
3. Remove the drain plug ① with a wrench and completely drain the oil.

⚠ CAUTION

Be careful not to burn yourself, as the engine oil is hot.

- **Waste oil must be disposed of properly.**
- **Check your local regulations.**

(Perform steps 4 to 7 only when the engine oil filter change is needed.)

4. Loosen the oil filter ② with an oil filter wrench. Remove the oil filter by turning it by hand.
5. Wipe the engine oil filter mounting surface with a clean rag.

⚠ CAUTION

- **Be sure to remove any old rubber gasket remaining on the mounting surface of the engine. Failure to do so could lead to engine damage.**
- **The dipstick must be inserted in place to prevent oil spillage from the dipstick hole when filling the engine with oil.**

6. Coat the gasket on the new filter with clean engine oil.
7. Screw in the oil filter clockwise until a slight resistance is felt, then tighten additionally more than 2/3 turn.

   Oil filter tightening torque:

   11 to 15 ft-lb

   (14.7 to 20.6 N·m)

8. Clean and re-install the drain plug with a new washer. Securely tighten the drain plug with a wrench.

   Drain plug tightening torque:

   22 to 27 ft-lb

   (30 to 37 N·m)

   Do not use excessive force.
9. Refill engine with recommended oil through the oil filler opening, and install the oil filler cap securely.

   See "Capacities and recommended fluids/lubricants" (P.387) for drain and refill capacity. The drain and refill capacity depends on the oil temperature and drain time. Use these specifications for reference only. Always use the dipstick to determine the proper amount of oil in the engine.
10. Start the engine and check for leakage around the drain plug and the oil filter. Correct as required.
11. Turn the engine off and wait more than 15 minutes. Check the oil level with the dipstick. Add engine oil if necessary.

After the operation

1. Reinstall the engine undercover in reverse order of removal.

2. Lower the vehicle carefully to the ground.
3. Dispose of waste oil and filter properly.

⚠ WARNING

- **Prolonged and repeated contact with used engine oil may cause skin cancer.**
- **Try to avoid direct skin contact with used oil. If skin contact is made, wash thoroughly with soap or hand cleaner as soon as possible.**
- **Keep used engine oil out of reach of children.**

AUTOMATIC TRANSMISSION FLUID (ATF)

When checking or replacement is required, we recommend a NISSAN dealer for servicing.

⚠ CAUTION

- **It is recommended that you use only Genuine NISSAN Matic P ATF. Do not mix with other fluids.**
- **Using automatic transmission fluid other than Genuine NISSAN Matic P ATF may cause deterioration in driveability and automatic transmission durability, and may damage the automatic transmission. Damage caused by the use of fluid other than as recommended is not covered by the NISSAN new vehicle limited warranty.**

BRAKE AND CLUTCH FLUID

BASIC INFORMATION

For further brake and clutch fluid information, see "Capacities and recommended fluids/lubricants" (P.387) of this manual.

⚠ WARNING

- **Use only new fluid from a sealed container. Old, inferior or contaminated fluid may damage the brake and clutch systems. The use of improper fluids can damage the brake and clutch systems, and affect the vehicle's stopping ability.**
- **Clean the filler cap before removing.**
- **Brake fluid and clutch fluid are poisonous and should be stored carefully in marked containers out of the reach of children.**

⚠ CAUTION

Do not spill the fluid on painted surfaces. This will damage the paint. If fluid is spilled, wash the surface with water.

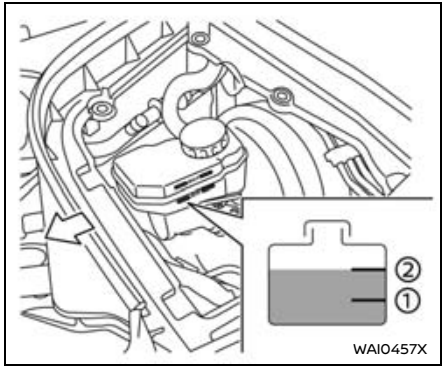

BRAKE FLUID

Check the fluid level in the reservoir. If the fluid is below the MIN line ① or the brake warning light comes on, add Genuine NISSAN Brake Fluid R35 Special II or equivalent **DOT4** up to the MAX line ②. If fluid must be added frequently, the system should be checked. It is recommended you visit a NISSAN dealer for this service.

⚠ WARNING

The Vehicle Dynamic Control (VDC) unit and other related parts were specially designed for this brake fluid. Using any other non-equivalent brake fluid may result in improper operation of the brake system which result in serious injury or death.

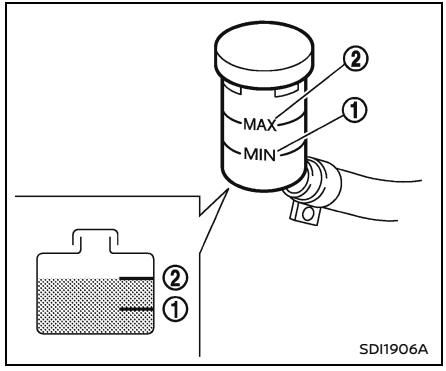

CLUTCH FLUID (Manual transmission models)

Check the fluid level in the reservoir. If the fluid level is below the MIN line ①, add Genuine NISSAN Brake Fluid R35 Special II or equivalent **DOT 4** up to the MAX line ②. If fluid must be added frequently, the system should be checked. It is recommended you visit a NISSAN dealer for this service.

WINDOW WASHER FLUID

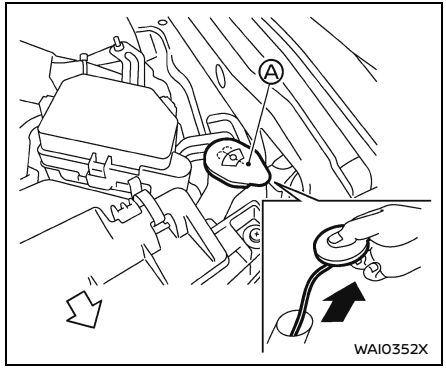

Fill the window washer fluid reservoir periodically. Add window washer fluid when the low window washer fluid warning appears in the vehicle information display.

To fill the window washer fluid reservoir, lift the cap off the reservoir tank and pour the window washer fluid into the tank opening.

To check the fluid level, use your finger to plug the center hole Ⓐ of the cap/tube assembly, then remove it from the reservoir. If there is no fluid in the tube, add fluid.

Add a washer solvent to the water for better cleaning. In the winter season, add a windshield washer antifreeze. Follow the manufacturer's instructions for the mixture ratio.

Refill the reservoir more frequently when driving conditions require an increased amount of window washer fluid.

Recommended fluid is Genuine NISSAN Windshield Washer Concentrate Cleaner & Antifreeze or equivalent.

⚠ CAUTION

- **Do not substitute engine antifreeze coolant for window washer solution. This may result in damage to the paint.**
- **Do not fill the window washer reservoir tank with washer fluid concentrates at full strength. Some methyl alcohol based washer fluid concentrates may permanently stain the grille if spilled while filling the window washer reservoir tank.**
- **Pre-mix washer fluid concentrates with water to the manufacturer's recommended levels before pouring the fluid into the window washer reservoir tank. Do not use the window washer reservoir tank to mix the washer fluid concentrate and water.**

BATTERY

BASIC INFORMATION

- Keep the battery surface clean and dry. Clean the battery with a solution of baking soda and water.
- Make certain the terminal connections are clean and securely tightened.
- If the vehicle is not to be used for 30 days or longer, disconnect the negative (–) battery terminal cable to prevent discharging it.

NOTE:
Care should be taken to avoid situations that can lead to potential battery discharge and potential no-start conditions such as:

1. **Installation or extended use of electronic accessories that consume battery power when the engine is not running (Phone chargers, GPS, DVD players, etc.)**
2. **Vehicle is not driven regularly and/or only driven short distances.**

In these cases, the battery may need to be charged to maintain battery health.

⚠ CAUTION

When the battery cable is removed from the battery terminal, do not close either of front doors. The automatic window adjusting function will not work, and the side roof panel may be damaged.

To disconnect the negative (−) battery terminal, perform the procedure in the following order. Otherwise, the window and the side roof panel may contact and be damaged.

1. Close the windows.
2. Open the hood.
3. Close and lock all the doors.
4. Disconnect the negative (−) battery terminal.
5. Securely close the hood.

To connect the negative (−) battery terminal, perform the procedure in the following order. Otherwise, the window and the side roof panel may contact and be damaged.

1. Unlock and open the driver side door. Do not close the door.
2. Open the hood.
3. Connect the negative (−) battery terminal. Then close the hood.
4. Fully open the driver side door window.
5. Close the driver side door and the window.

⚠ WARNING

- **Do not expose the battery to flames or electrical sparks. Hydrogen gas generated by the battery is explosive. Do not allow battery fluid to contact your skin, eyes, fabrics, or painted surfaces. After touching a battery or battery cap, do not touch or rub your eyes. Thoroughly wash your hands. If the acid contacts your eyes, skin or clothing, immediately flush with water for at least 15 minutes and seek medical attention.**
- **Do not operate the vehicle if the fluid in the battery is low. Low battery fluid can cause a higher load on the battery which can generate heat, reduce battery life, and in some cases lead to an explosion.**
- **When working on or near a battery, always wear suitable eye protection and remove all jewelry.**
- **Battery posts, terminals and related accessories contain lead and lead compounds. Wash hands after handling.**
- **Keep the battery out of the reach of children.**

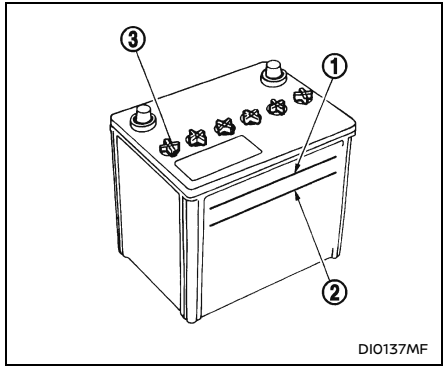

Check the fluid level in each cell (Remove the battery cover if it is necessary). It should be between the UPPER LEVEL ① and LOWER LEVEL ② lines.

If it is necessary to add fluid, add only distilled water to bring the level to the indicator in each filler opening. **Do not overfill.**

1. Remove the cell plugs ③.

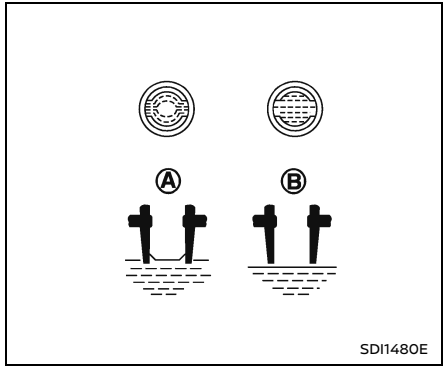

2. Add distilled water up to the UPPER LEVEL ① line.

   If the side of the battery is not clear, check the distilled water level by looking directly above the cell; the condition Ⓐ indicates OK and the conditions Ⓑ needs more to be added.
3. Tighten cell plugs ③.

Vehicles operated in high temperatures or under severe conditions require frequent checks of the battery fluid level.

JUMP STARTING

If jump starting is necessary, see "Jump starting" (P.309). If the engine does not start by jump starting, the battery may have to be replaced. It is recommended you visit a NISSAN dealer for this service.

DRIVE BELTS

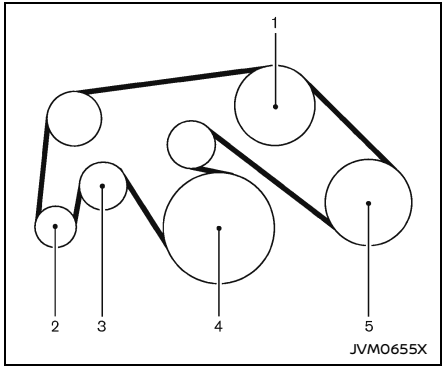

1. Water pump
2. Alternator
3. Drive belt auto-tensioner
4. Crankshaft pulley
5. Air conditioner compressor

WARNING

Be sure the ignition switch is in the OFF or LOCK position before servicing drive belts. The engine could rotate unexpectedly.

1. Visually inspect the belt for signs of unusual wear, cuts, fraying or looseness. If the belt is in poor condition or loose, have it replaced or adjusted. It is recommended you visit a NISSAN dealer for this service.
2. Have the belt condition checked regularly for condition and tension in accordance with the maintenance schedule shown in the "9. Maintenance and schedules" section.

SPARK PLUGS

BASIC INFORMATION

WARNING

Be sure the engine and the ignition switch are off and that the parking brake is engaged securely.

CAUTION

Be sure to use the correct socket to remove the spark plugs. An incorrect socket can damage the spark plugs.

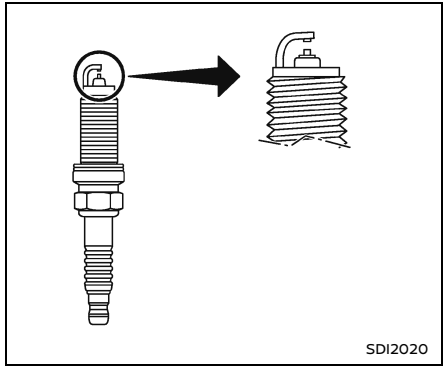

REPLACING SPARK PLUGS

Basic information

If replacement is required, it is recommended you visit a NISSAN dealer for this service.

Iridium-tipped spark plugs

It is not necessary to replace the iridium-tipped spark plugs as frequently as the conventional type spark plugs since they will last much longer. Follow the maintenance schedule shown in the "9. Maintenance and schedules" section, but do not reuse them by cleaning or regapping.

Always replace spark plugs with recommended or equivalent ones.

AIR CLEANER

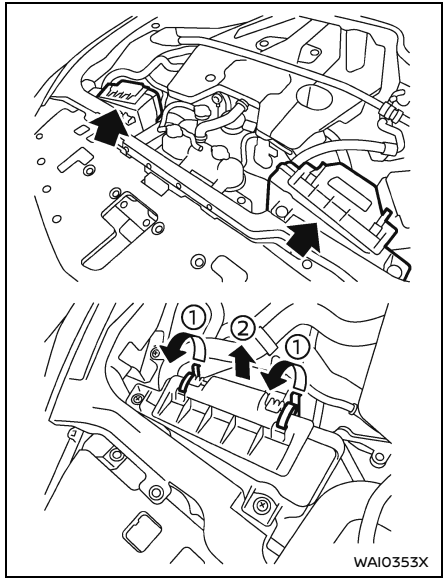

Remove the retainers ① as illustrated and pull out the filter element ②.

The filter element should not be cleaned and reused. Replace it according to the maintenance schedule shown in the "9. Maintenance and schedules" section. When replacing the filter, wipe the inside of the air cleaner housing and the cover

with a damp cloth.

⚠ WARNING

- **Operating the engine with the air cleaner removed can cause you or others to be burned. The air cleaner not only cleans the air, it stops flame if the engine backfires. If it is not there, and the engine backfires, you could be burned. Do not drive with the air cleaner removed, and be careful when working on the engine with the air cleaner removed.**
- **Never pour fuel into the throttle body or attempt to start the engine with the air cleaner removed. Doing so could result in serious injury.**

CLEANING

Basic information

If your windshield is not clear after using the windshield washer or if a wiper blade chatters when running, wax or other material may be on the blade or windshield.

Clean the outside of the windshield with a washer solution or a mild detergent. Your windshield is clean if beads do not form when rinsing with clear water.

Clean each blade by wiping it with a cloth soaked in a washer solution or a mild detergent. Then rinse the blade with clear water. If your windshield is still not clear after cleaning the blades and using the wiper, replace the blades.

⚠ CAUTION

Worn windshield wiper blades can damage the windshield and impair driver vision.

When a washer nozzle is clogged

It is recommended you see a NISSAN dealer if a washer nozzle is clogged or any malfunction occurs. Do not attempt to clean the nozzle using a needle or a pin. Doing so may damage the nozzle.

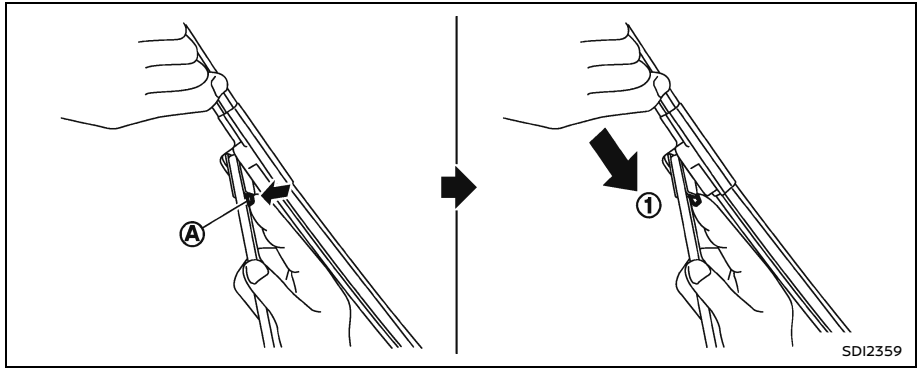

REPLACING

Replace the wiper blades if they are worn.

1. Lift the wiper arm away from the windshield.
2. Push the release tab Ⓐ, and then move the wiper blade down the wiper arm ① while pushing the release tab to remove.
3. Insert the new wiper blade onto the wiper arm until a click sounds.
4. Rotate the wiper blade so the dimple is in the groove.

⚠ CAUTION

- **After wiper blade replacement, return the wiper arm to its original position;**

  otherwise it may be damaged when the hood is opened.
- **Make sure the wiper blades contact the glass; otherwise the arm may be damaged from wind pressure.**

BRAKES

BASIC INFORMATION

If the brakes do not operate properly, it is recommended you have the brakes checked by a NISSAN dealer.

SELF-ADJUSTING BRAKES

Your vehicle is equipped with self-adjusting brakes.

The disc-type brakes self-adjust every time the brake pedal is applied.

⚠ WARNING

Have your brake system checked if the brake pedal height does not return to normal. It is recommended you visit a NISSAN dealer for this service.

BRAKE PAD WEAR WARNING

The disc brake pads have audible wear warnings. When a brake pad requires replacement, it will make a high pitched scraping sound when the vehicle is in motion. This scraping sound will first occur only when the brake pedal is depressed. After more wear of the brake pad the sound will always be heard even if the brake pedal is not depressed. Have the brakes checked as soon as possible if the wear warning sound is heard.

Under some driving or climate conditions, occasional brake squeak, squeal or other noise may be heard. Occasional brake noise during light to moderate stops is normal and does not affect the function or performance of the brake system.

Proper brake inspection intervals should be followed. For additional information, see the maintenance schedule shown in the "9. Maintenance and schedules" section.

REPLACING BRAKE DISC ROTORS (for NISMO models)

Replacement of the disc rotors are necessary in the following cases. For details, please contact your Nissan dealer.

- If there are cracks on the surface of the disc rotor (especially 4 mm or more at the cooling holes) that meet the replacement criteria
- If warping, roughness, or record grooves with a depth of 0.2 mm or more occur on the surface of the disc rotor and meet the replacement criteria
- If brake judder occurs during braking, etc.

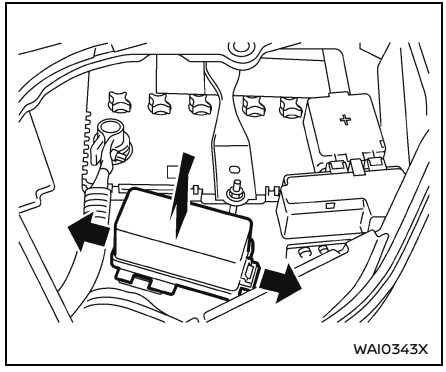
WAI0343X

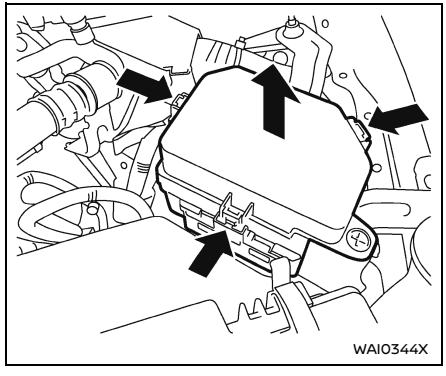
WAI0344X

ENGINE COMPARTMENT

Basic information

⚠ WARNING

Never use a fuse of a higher or lower amperage rating than that specified on the fuse box cover. This could damage the electrical system or electronic control units or cause a fire.

If any electrical equipment does not operate, check for an open fuse.

1. Be sure the ignition switch is pushed to the OFF or LOCK position and the headlight switch is in the OFF (if so equipped) or AUTO position and the headlights are OFF.
2. Open the engine hood.
3. Remove the fuse/fusible link holder cover.
4. Remove the fuse with the fuse puller located in the passenger compartment fuse box.

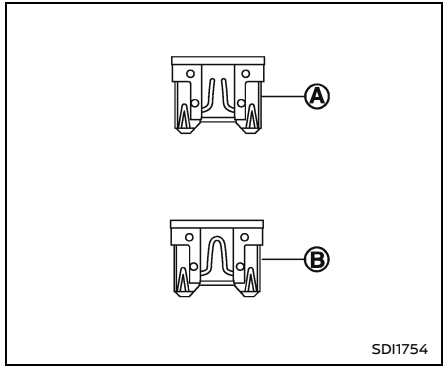

5. If the fuse is open Ⓐ, replace it with a new fuse Ⓑ. Spare fuses are stored in the passenger compartment fuse box.
6. If a new fuse also opens, have the electrical system checked and repaired. It is recommended you visit a NISSAN dealer for this service.

Fusible links

If any electrical equipment does not operate and fuses are in good condition, check the fusible links. If any of these fusible links are melted, replace only with genuine NISSAN parts.

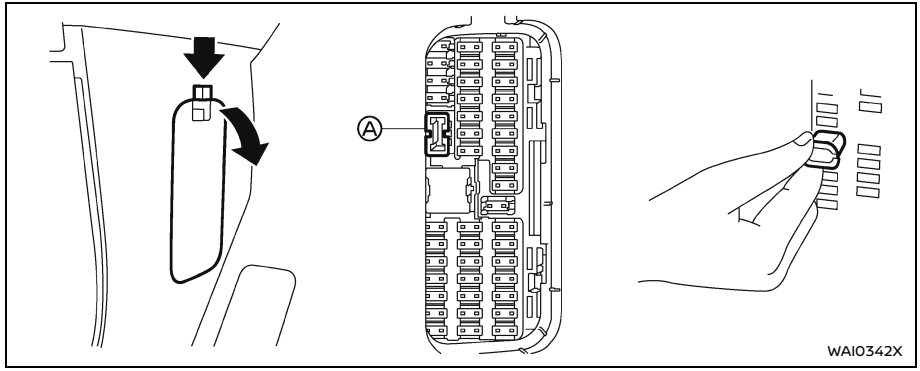

PASSENGER COMPARTMENT

Basic information

⚠ WARNING

Never use a fuse of a higher or lower amperage rating than that specified on the fuse box cover. This could damage the electrical system or electronic control units or cause a fire.

If any electrical equipment does not operate, check for an open fuse.

1. Be sure the ignition switch is pushed to the OFF or LOCK position and the headlight switch is in the OFF (if so equipped) or AUTO position and the headlights are OFF.
2. Open the fuse box cover.
3. Remove the fuse with the fuse puller Ⓐ.
4. If the fuse is open, replace it with a new fuse. Spare fuses are stored in the fuse box.
5. If a new fuse also opens, have the electrical system checked and repaired. It is recommended you visit a NISSAN dealer for this service.

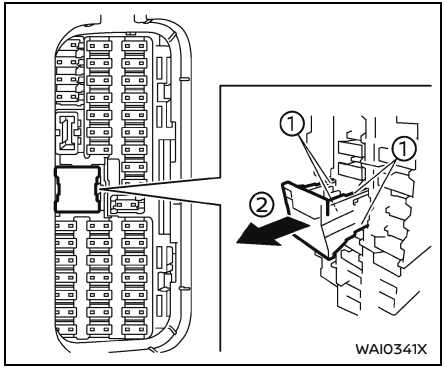

Extended storage fuse switch

To reduce battery drain, the extended storage fuse switch comes from the factory switched off.

Prior to delivery of your vehicle, the switch is pushed in (switched on) and should always remain on.

If the extended storage fuse switch is not pushed in (switched on), the "Shipping Mode On, Push Storage Fuse" warning may appear on the vehicle information display. See "Shipping Mode On Push Storage Fuse warning (if so equipped)" (P.97).

If any electrical equipment does not operate, remove the extended storage fuse switch and check for an open fuse.

NOTE:
If the extended storage fuse switch malfunctions, or if the fuse is open, it is not necessary to replace the switch. In this case, remove the extended storage fuse switch and replace it with a new fuse of the same rating.

How to remove the extended storage fuse switch:

1. To remove the extended storage fuse switch, be sure the ignition switch is in the OFF or LOCK position.
2. Be sure the headlights are off. (See "Headlight switch" (P.112) or "Autolight system" (P.112).)
3. Remove the fuse box cover.
4. Pinch the locking tabs ① found on each side of the storage fuse switch.
5. Pull the storage fuse switch straight out from the fuse box ②.

⚠ WARNING

- **Ingestion hazard: Death or serious injury can occur if ingested.**
- **A swallowed button cell or coin battery can cause internal chemical burns in as little as 2 hours.**
- **Keep new and used batteries out of reach of children.**
- **Be careful not to allow children to swallow removed parts.**
- **Seek immediate medical attention if a battery is suspected to be swallowed or inserted inside any part of the body.**
- **For treatment information call the National battery ingestion hotline @ 1-800-498-8666.**
- **There is a danger of explosion if the battery is incorrectly replaced. Replace only with the same or equivalent type of battery. Incorrectly replacing the battery can lead to injury or death.**
- **Do not crush or cut the battery.**
- **Do not subject the battery to extremely low air pressure at high altitude.**

- **Do not expose the battery to excessive heat such as sunshine, fire or similar heat sources.**

⚠ CAUTION

- **An improperly disposed battery can harm the environment. Always confirm local regulations for battery disposal.**
- **When changing batteries, do not let dust or oil get on the components.**

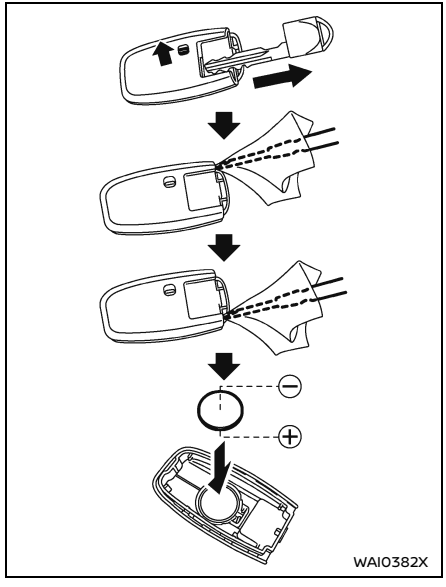

Replace the battery in the Intelligent Key as follows:

1. Remove the mechanical key from the Intelligent Key.
2. Insert a small screwdriver into the slit (on the right and left sides) and twist it to separate the upper part from the lower part. Use a cloth to protect the casing.
3. Replace the battery with a new one.

   Recommended battery:

   CR2032 or equivalent

   - Do not touch the internal circuit and electric terminals as doing so could cause a malfunction.
   - Hold the battery by the edges. Holding the battery across the contact points will seriously deplete the storage capacity.
   - Make sure that the ⊕ side faces the bottom of the case.

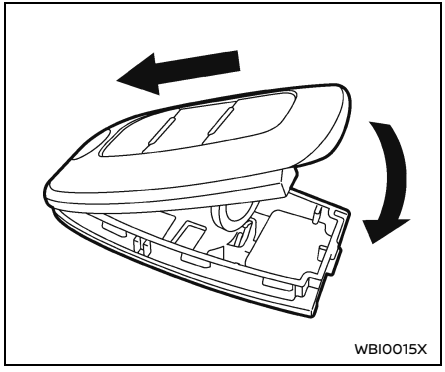

4. Align the tips of the upper and lower parts, and then push them together until it is securely closed.
5. Operate the buttons to check its operation.

If you need any assistance for replacement, it is recommended you visit a NISSAN dealer for this service.

NOTE:

FCC Notice:

For USA:

FCC ID: KR5TXPZ5

This device complies with Part 15 of the FCC Rules. Operation is subject to the following two conditions: (1) this device may not cause harmful interference, and (2) this device must accept any interference received, including interference that may cause undesired operation.

NOTE:

Changes or modifications not expressly approved by the party responsible for compliance could void the user's authority to operate the equipment.

No changes shall be made to the equipment without the manufacturer's permission as this may void the use's authority to operate the equipment.

This equipment complies with FCC radiation exposure limits set forth for portable use conditions.

For Canada:

IC: 7812D-TXPZ5

This device complies with Industry Canada licence-exempt RSS standard(s). Operation is subject to the following two conditions: (1) this device may not cause interference, and (2) this device must accept any interference, including interference that may cause undesired operation of the device.

This equipment complies with the safety requirements for RF exposure in accordance with RSS-102 issue 5 2015 for portable use conditions.

Le présent appareil est conforme aux CNR d'Industrie Canada applicables aux appareils radio exempts de licence. L'exploitation est autorisée aux deux conditions suivantes : (1) l'appareil ne doit pas produire de brouillage, et (2) l'utilisateur de l'appareil doit accepter tout brouillage radioélectrique subi, même si le brouillage est susceptible d'en compromettre le fonctionnement.

Cet équipement est conforme avec les exigences de sécurité pour l'exposition aux RF conformément aux RSS - 102 Issue 5 2015 pour des conditions d'utilisation portables.

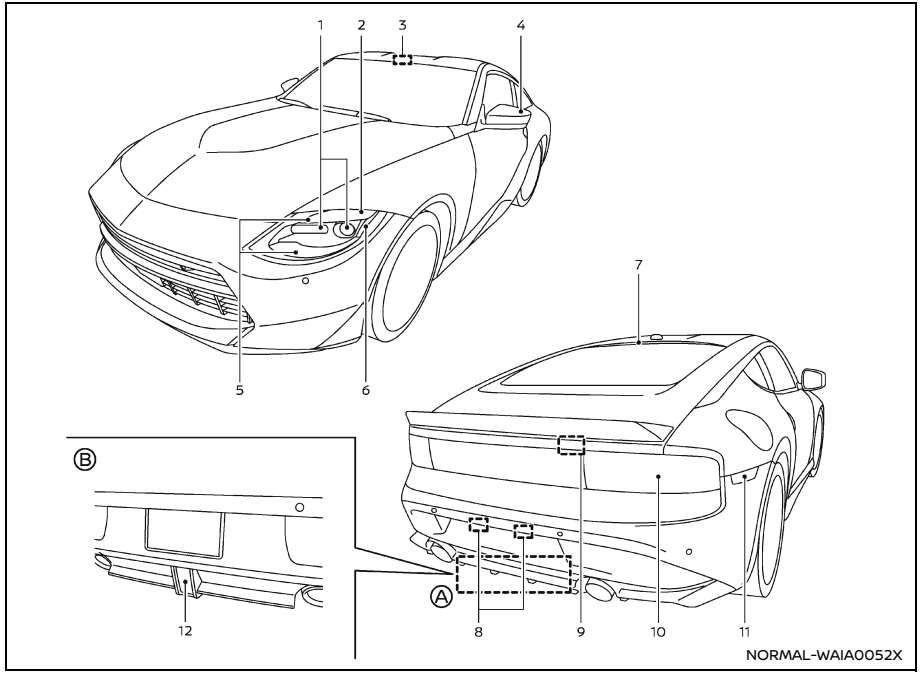

BASIC INFORMATION

1. Headlight (high- and low-beam)
2. Front turn signal light
3. Map light
4. Side turn signal light
5. Daytime running/front parking light
6. Front side marker light
7. High-mounted stop light
8. License plate light
9. Cargo light
10. Rear combination light (rear turn signal/tail/stop/rear fog (if so equipped)/back-up light)
11. Rear side marker light
12. Rear fog light (if so equipped)

Ⓐ Except for NISMO models

Ⓑ NISMO models

HEADLIGHTS

Basic information

Fog may temporarily form inside the lens of the exterior lights in the rain or in a car wash. A temperature difference between the inside and the outside of the lens causes the fog. This is not a malfunction. If large drops of water collect inside the lens, it is recommended you visit a NISSAN dealer for this service.

If replacement is required, it is recommended you visit a NISSAN dealer for this service.

EXTERIOR AND INTERIOR LIGHTS

Basic information

This vehicle is equipped with LED lights.

Visit your NISSAN dealer for LED light replacement, replacement bulb type or any bulb changing procedure not listed in the section.

- Map light
  - Wattage (W): 8
- Vanity mirror light*
  - Wattage (W): 1.8
- Cargo light*
  - Wattage (W): 5
- Glove box light*
  - Wattage (W): 1.4

*: It is recommended you visit a NISSAN dealer for replacement.

NOTE:
Always check with the Parts Department at a NISSAN dealer for the latest information about parts.

Replacement procedures

All other lights are either type A, B, C, D, E or F. When replacing a bulb, first remove the lens and/or cover.

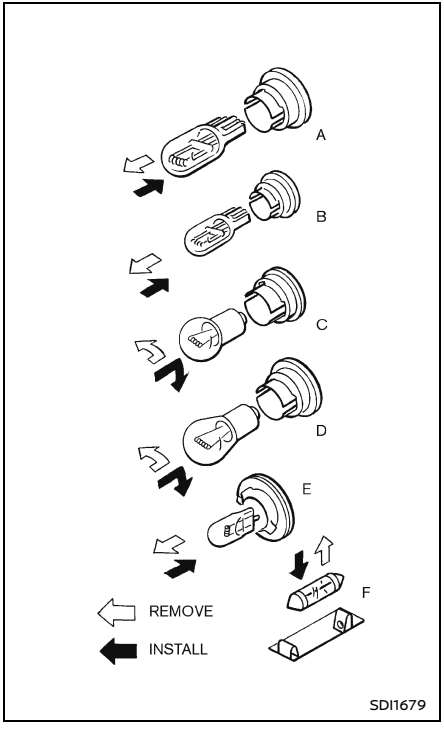

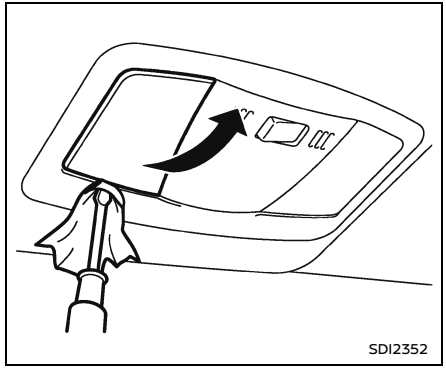

Map light

BASIC INFORMATION

If you have a flat tire, see "Flat tire" (P.299).

TIRE PRESSURE

Tire Pressure Monitoring System (TPMS)

This vehicle is equipped with the Tire Pressure Monitoring System (TPMS). It monitors tire pressure of all tires. When the low tire pressure warning light is lit and the "Tire Pressure Low - Add Air" warning message is displayed in the vehicle information display, one or more of your tires is significantly under-inflated.

The TPMS will activate only when the vehicle is driven at speeds above 16 MPH (25 km/h). Also, this system may not detect a sudden drop in tire pressure (for example a flat tire while driving).

For more details, see "Low tire pressure warning light" (P.83), "Tire Pressure Monitoring System (TPMS)" (P.191) and "Tire Pressure Monitoring System (TPMS)" (P.299).

Tire inflation pressure

Check the pressure of the tires often and always prior to long distance trips. The recommended tire pressure specifications are shown on the Tire and Loading Information label under the "Cold Tire Pressure" heading. The Tire and Loading Information label is affixed to the driver side center pillar. Tire pressures should be checked regularly because:

- Most tires naturally lose air over time.
- Tires can lose air suddenly when driven over potholes or other objects or if the vehicle strikes a curb while parking.

The tire pressures should be checked when the tires are cold. The tires are considered COLD after the vehicle has been parked for 3 or more hours, or driven less than 1 mile (1.6 km) at moderate speeds.

TPMS with Easy Fill Tire Alert provides visual and audible signals outside the vehicle for inflating the tires to the recommended COLD tire pressure. (See "TPMS with Easy Fill Tire Alert" (P.194).)

Incorrect tire pressure, including under inflation, may adversely affect tire life and vehicle handling.

⚠ WARNING

- **Improperly inflated tires can fail suddenly and cause an accident.**
- **The Gross Vehicle Weight rating (GVWR) is located on the F.M.V.S.S./C.M.V.S.S. label. The vehicle weight capacity is indicated on the Tire and Loading Information label. Do not load your vehicle beyond this capacity. Overloading your vehicle may result in reduced tire life, unsafe operating conditions due to premature tire failure, or unfavorable handling characteristics and could also lead to a serious accident. Loading beyond the specified capacity may also result in failure of other vehicle components.**

- **Before taking a long trip, or whenever you heavily load your vehicle, use a tire pressure gauge to ensure that the tire pressures are at the specified level.**
- **For additional information regarding tires, refer to "Important Tire Safety Information" (US) or "Tire Safety Information" (Canada) in the Warranty Information Booklet.**

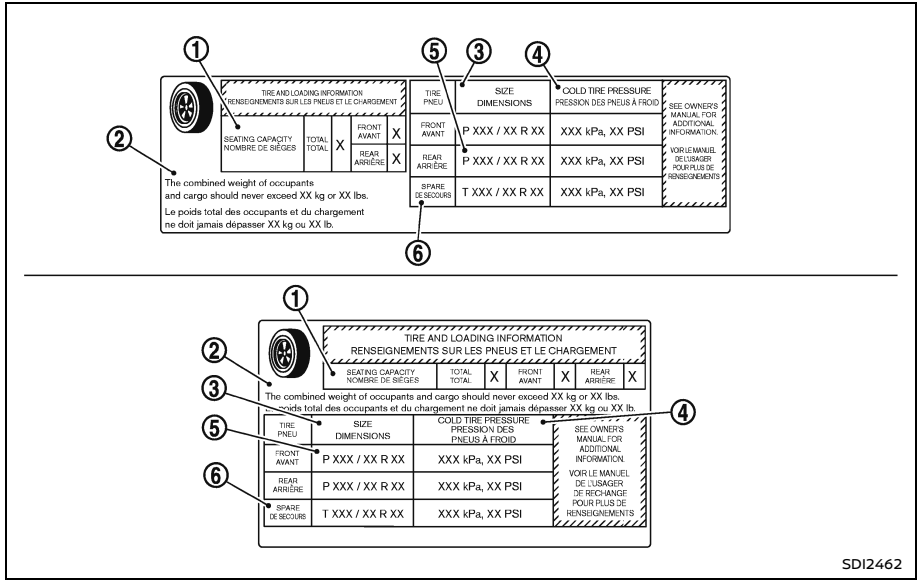

Tire and Loading Information label

① Seating capacity: The maximum number of occupants that can be seated in the vehicle.

② Vehicle load limit: See "Vehicle loading information" (P.403).

③ Original size: The size of the tires originally installed on the vehicle at the factory.

④ Cold tire pressure: Inflate the tires to this pressure when the tires are cold. Tires are consid-

ered COLD after the vehicle has been parked for 3 or more hours, or driven less than 1 mile (1.6 km) at moderate speeds. The recommended cold tire inflation is set by the manufacturer to provide the best balance of tire wear, vehicle handling, driveability, tire noise, etc., up to the vehicle's GVWR.

⑤ Tire size — see "Tire labeling" (P.356).

⑥ Spare tire size or compact spare tire size (if so equipped)

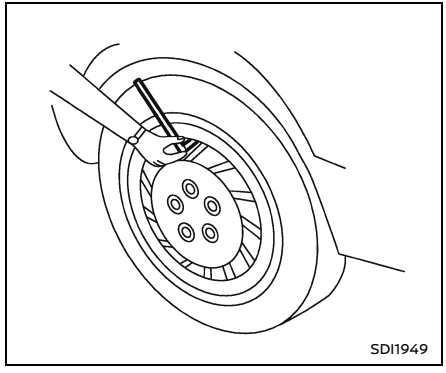

Checking the tire pressure

1. Remove the valve stem cap from the tire.
2. Press the pressure gauge squarely onto the valve stem. Do not press too hard or force the valve stem sideways, or air will escape. If the hissing sound of air escaping from the tire is heard while checking the pressure, reposition the gauge to eliminate this leakage.
3. Remove the gauge.
4. Read the tire pressure on the gauge stem and compare it to the specification shown on the Tire and Loading Information label.
5. Add air to the tire as needed. If too much air is added, press the core of the valve stem briefly with the tip of the gauge stem to release pressure. Recheck the pressure and add or release air as needed.
6. Install the valve stem cap.
7. Check the pressure of all other tires.

Except for NISMO models:

Size	Cold Tire Inflation Pressure	
	psi	kPa
Front Original Tire: 245/45R18 96W	33	230

Front Original Tire: 255/40R19 96W	**32**	**220**
Rear Original Tire: 245/45R18 96W	**33**	**230**
Rear Original Tire: 275/35R19 96W	**29**	**200**

NISMO models:

Size	Cold Tire Inflation Pressure	
	psi	kPa
Front Original Tire: 255/40R19 100Y XL	**33**	**230**
Rear Original Tire: 285/35R19 103Y XL	**35**	**240**

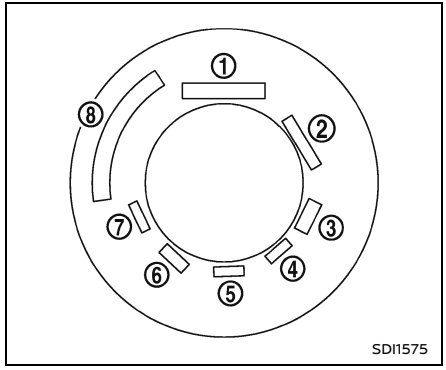

Example

TIRE LABELING

Basic information

Federal law requires tire manufacturers to place standardized information on the sidewall of all tires. This information identifies and describes the fundamental characteristics of the tire and also provides the tire identification number (TIN) for safety standard certification. The TIN can be used to identify the tire in case of a recall.

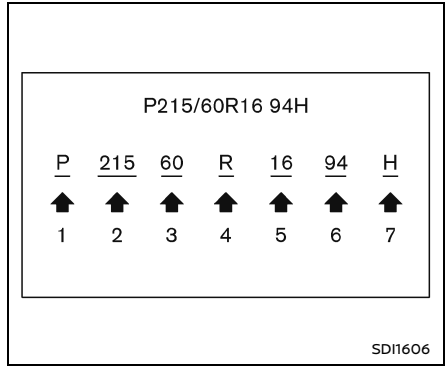

Example

① Tire size (example: P215/60R16 94H)

1. P: The “P” indicates the tire is designed for passenger vehicles. (Not all tires have this information.)
2. Three-digit number (215): This number gives the width in millimeters of the tire from sidewall edge to sidewall edge.
3. Two-digit number (60): This number, known as the aspect

ratio, gives the tire's ratio of height to width.

4. R: The "R" stands for radial.
5. Two-digit number (16): This number is the wheel or rim diameter in inches.
6. Two- or three-digit number (94): This number is the tire's load index. It is a measurement of how much weight each tire can support. You may not find this information on all tires because it is not required by law.
7. H: Tire speed rating. You should not drive the vehicle faster than the tire speed rating.

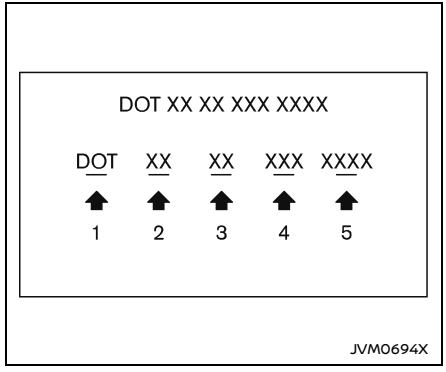

Example (Type A) (if so equipped)

② TIN (Tire Identification Number) for a new tire (example: DOT XX XX XXX XXXX)

1. DOT: Abbreviation for the "Department Of Transportation". The symbol can be placed above, below or to the left or right of the Tire Identification Number.
2. Two-digit code: Manufacturer's identification mark
3. Two-digit code: Tire size
4. Three-digit code: Tire type code (Optional)
5. Four numbers represent the week and year the tire was built. For example, the numbers 3103 means the 31st week of 2003. If these numbers are missing, then look on the other sidewall of the tire.

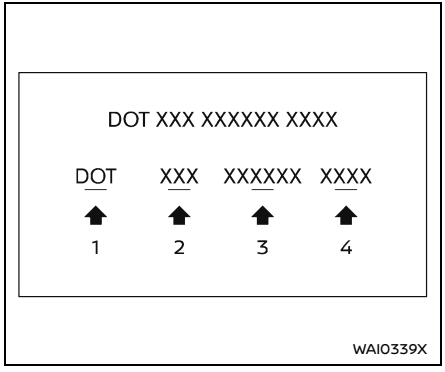

Example (Type B) (if so equipped)

② TIN (Tire Identification Number) for a new tire (example: DOT XXX XXXXXX XXXX)

1. DOT: Abbreviation for the "Department Of Transportation". The symbol can be placed above, below or to the left of the Tire Identification Number.
2. Three-digit code: Manufacturer's identification mark
3. Six-digit code: Descriptive code used to identify significant characteristics of the tire.
4. Four numbers represent the week and year the tire was built. For example, the numbers 3103 means the 31st week of 2003.

③ Tire ply composition and material

The number of layers or plies of rubber-coated fabric in the tire.

Tire manufacturers also must indicate the materials in the tire, which include steel, nylon, polyester, and others.

④ Maximum permissible inflation pressure

This number is the greatest amount of air pressure that should be put in the tire. Do not exceed the maximum permissible inflation pressure.

⑤ Maximum load rating

This number indicates the maximum load in kilograms and pounds that can be carried by the tire. When replacing the tires on the vehicle, always use a tire that has the same load rating as the factory installed tire.

⑥ Term of "tubeless" or "tube type"

Indicates whether the tire requires an inner tube ("tube type") or not ("tubeless").

⑦ The word "radial"

The word "radial" is shown, if the tire has radial structure.

⑧ Manufacturer or brand name

Manufacturer or brand name is shown.

Other tire-related terminology

In addition to the many terms that are defined throughout this section, Intended Outboard Sidewall is (1) the sidewall that contains a whitewall, bears white lettering or bears manufacturer, brand and/or model name molding that is higher or deeper than the same molding on the other sidewall of the tire, or (2) the outward facing sidewall of an asymmetrical tire that has a particular side that must always face outward when mounted on a vehicle.

TYPES OF TIRES

Basic information

⚠ WARNING

- **When changing or replacing tires, be sure all four tires are of the same type (Example: Summer, All Season or Snow) and construction. A NISSAN dealer may be able to help you with information about tire type, size, speed rating and availability.**
- **Replacement tires may have a lower speed rating than the factory equipped tires, and may not match the potential maximum vehicle speed. Never exceed the maximum speed rating of the tire.**
- **Replacing tires with those not originally specified by NISSAN could affect the proper operation of the TPMS.**
- **For additional information regarding tires, refer to "Important Tire Safety Information" (US) or "Tire Safety Information" (Canada) in the Warranty Information Booklet.**

All season tires

NISSAN specifies all season tires on some models to provide good performance all year, including snowy and icy road conditions. All Season tires are identified by ALL SEASON and/or M&S (Mud and Snow) on the tire sidewall. Snow tires have better snow traction than All Season tires and may be more appropriate in some areas.

Summer tires

NISSAN specifies summer tires on some models to provide superior performance on dry roads. Summer tire performance is substantially reduced in snow and ice. Summer tires do not have the tire traction rating M&S on the tire sidewall.

If you plan to operate your vehicle in snowy or icy conditions, NISSAN recommends the use of SNOW tires or ALL SEASON tires on all four wheels.

Snow tires

If snow tires are needed, it is necessary to select tires equivalent in size and load rating to the original equipment tires. If you do not, it can adversely affect the safety and handling of your vehicle.

Generally, snow tires will have lower speed ratings than factory equipped tires and may not match the potential maximum vehicle speed. Never exceed the maximum speed rating of the tire.

If you install snow tires, they must be the same brand, construction and tread pattern on all four wheels, and the same sizes as the original tires.

For additional traction on icy roads, studded tires may be used. However, some U.S. states and Canadian provinces prohibit their use. Check local, state and provincial laws before installing studded tires. Skid and traction capabilities of studded snow tires, on wet or dry surfaces, may be poorer than that of non-studded snow tires.

TIRE CHAINS

⚠ CAUTION

Tire chains/cables should not be installed on 19-inch size tires. Doing so will cause damage to the vehicle.

Use of tire chains may be prohibited according to location. Check the local laws before installing tire chains. When installing tire chains, make sure they are the proper size for the tires on your vehicle and are installed according to the chain manufacturer's suggestions. **Use only SAE Class S chains.** Class "S" chains

are used on vehicles with restricted tire to vehicle clearance. Vehicles that can use Class "S" chains are designed to meet the SAE standard minimum clearances between the tire and the closest vehicle suspension or body component required to accommodate the use of a winter traction device (tire chains or cables). The minimum clearances are determined using the factory equipped tire size. Other types may damage your vehicle. Use chain tensioners when recommended by the tire chain manufacturer to ensure a tight fit. Loose end links of the tire chain must be secured or removed to prevent the possibility of whipping action damage to the fenders or underbody. If possible, avoid fully loading your vehicle when using tire chains. In addition, drive at a reduced speed. Otherwise, your vehicle may be damaged and/or vehicle handling and performance may be adversely affected.

Tire chains must be installed only on the rear wheels and not on the front wheels.

Do not use tire chains on dry roads. Driving with tire chains in such conditions can cause damage to the various mechanisms of the vehicle due to some overstress.

CHANGING WHEELS AND TIRES

Tire rotation

Tires cannot be rotated on this vehicle because the front tires are a different size and/or wheel rim offset than the rear tires.

⚠ WARNING

- **Retighten the wheel nuts when the vehicle has been driven for 600 miles (1,000 km) (also in cases of a flat tire, etc.).**
- **For additional information regarding tires, refer to "Important Tire Safety Information" (US) or "Tire Safety Information" (Canada) in the Warranty Information Booklet.**

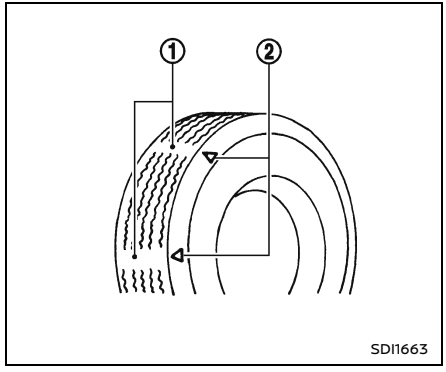

Tire wear and damage

① Wear indicator

② Wear indicator location marks. The locations are shown by " △ ", "TWI", etc. depending on tire types.

⚠ WARNING

- **Tires should be periodically inspected for wear, cracking, bulging or objects caught in the tread. If excessive wear, cracks, bulging or deep cuts are found, the tire(s) should be replaced.**
- **The original tires have built-in tread wear indicators. When wear indicators are visible, the tire(s) should be replaced.**
- **Tires degrade with age and use. Have tires, including the spare, over 6 years old checked by a qualified technician, because some tire damage may not be obvious. Replace the tires as necessary to prevent tire failure and possible personal injury.**
- **For additional information regarding tires, refer to "Important Tire Safety Information" (US) or "Tire Safety Information" (Canada) in the Warranty Information Booklet.**

Replacing wheels and tires

When replacing a tire, use the same size, tread design, speed rating and load carrying capacity as originally equipped. (See "Specifications" (P.394) for recommended types and sizes of tires and wheels.)

⚠ WARNING

- **The use of tires other than those recommended or the mixed use of tires of different brands, construction (bias, bias-belted or radial), or tread patterns can adversely affect the ride, braking, handling, ground clearance, body-to-tire clearance, tire chain clearance, speedometer calibration, headlight aim and bumper height. Some of these effects may lead to accidents and could result in serious personal injury.**
- **If your vehicle was originally equipped with 4 tires that were the same size and you are only replacing 2 of the 4 tires, install the new tires on the rear axle. Placing new tires on the front axle may cause loss of vehicle control in some driving conditions and cause an accident and personal injury.**
- **If the wheels are changed for any reason, always replace with wheels which have the same off-set dimension. Wheels of a different off-set could cause premature tire wear, degrade vehicle handling characteristics and/or interference with the brake discs/drums. Such interference can lead to decreased braking efficiency and/or early brake pad/shoe wear. See "Wheels and tires" (P.395) of this manual for wheel off-set dimensions.**
- **Replacing tires with those not originally specified by NISSAN could affect the proper operation of the TPMS.**

- **The TPMS sensor may be damaged if it is not handled correctly. Be careful when handling the TPMS sensor.**
- **When replacing the TPMS sensor, the ID registration may be required. It is recommended you visit a NISSAN dealer for ID registration.**
- **Do not use a valve stem cap that is not specified by NISSAN. The valve stem cap may become stuck.**
- **Be sure that the valve stem caps are correctly fitted. Otherwise the valve may be clogged up with dirt and cause a malfunction or loss of pressure.**
- **Do not install a deformed wheel or tire even if it has been repaired. Such wheels or tires could have structural damage and could fail without warning.**
- **The use of retread tire is not recommended.**
- **For additional information regarding tires, refer to "Important Tire Safety Information" (US) or "Tire Safety Information" (Canada) in the Warranty Information Booklet.**

Wheel balance

Unbalanced wheels may affect vehicle handling and tire life. Even with regular use, wheels can get out of balance. Therefore, they should be balanced as required.

Wheel balance service should be performed with the wheels off the vehicle. Spin balancing the wheels on the vehicle could lead to mechanical damage.

For additional information regarding tires, refer to "Important Tire Safety Information" (US) or "Tire Safety Information" (Canada) in the NISSAN Warranty Information Booklet.

Care of wheels

See "Cleaning exterior" (P.318) for details about care of the wheels.

EMERGENCY TIRE PUNCTURE REPAIR KIT

The emergency tire puncture repair kit (Emergency Tire Sealant) is supplied with the vehicle instead of a spare tire. It can be used to temporarily repair minor tire punctures.

If possible, have the vehicle towed to a facility that can repair or replace the flat tire. Using the emergency tire puncture repair kit may cause a malfunction of the tire pressure sensor and cause the low tire pressure warning light to illuminate.

See "Flat tire" (P.299) for more details.

JACKING UP THE VEHICLE AND REPLACING TIRES

Basic information

This section contains the information about the vehicle jack-up procedures and the tire replacement.

NOTE:
Jacking tools are not equipped as standard with this vehicle. It is recommended you contact a NISSAN dealer about acquiring the tools.

⚠ WARNING

- **Make sure the parking brake is securely applied and the manual transmission is shifted into R (reverse), or the automatic transmission into P (Park).**
- **Never change tires when the vehicle is on a slope, ice or slippery areas. This is hazardous.**
- **Never change tires if oncoming traffic is close to your vehicle. Wait for professional road assistance.**

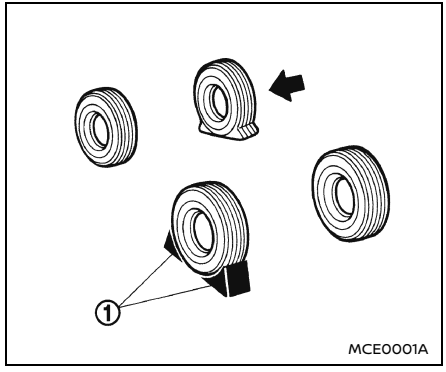

Blocking wheels

Place suitable blocks ① at both the front and back of the wheel diagonally opposite the flat tire to prevent the vehicle from moving when it is jacked up.

⚠ WARNING

Be sure to block the wheel as the vehicle may move and result in personal injury.

Jacking up the vehicle and removing the damaged tire

⚠ WARNING

- **Never get under the vehicle while it is supported only by the jack. If it is necessary to work under the vehicle, support it with safety stands.**
- **Use only the jack provided with your vehicle to lift the vehicle. Do not use the jack provided with your vehicle on other vehicles. The jack is designed for lifting only your vehicle during a tire change.**
- **Use the correct jack-up points. Never use any other part of the vehicle for jack support.**
- **Never jack up the vehicle more than necessary.**
- **Never use blocks on or under the jack.**
- **Do not start or run the engine while vehicle is on the jack, as it may cause the vehicle to move. This is especially true for vehicles with a Limited Slip Differential.**
- **Do not allow passengers to stay in the vehicle while it is on the jack.**

Carefully read the caution label attached to the jack body and the following instructions.

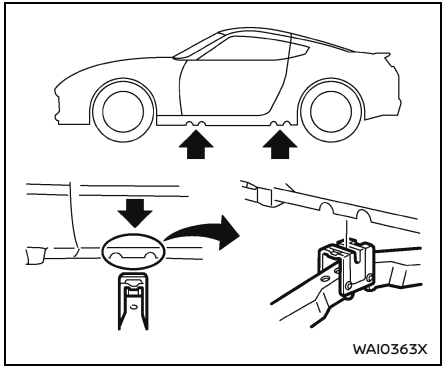

Jack-up point

1. Place the jack directly under the jack-up point as illustrated so the top of the jack contacts the vehicle at the jack-up point. Align the jack head between the two notches in the front or the rear as shown. Also fit the groove of the jack head between the notches as shown.

   The jack should be used on level firm ground.

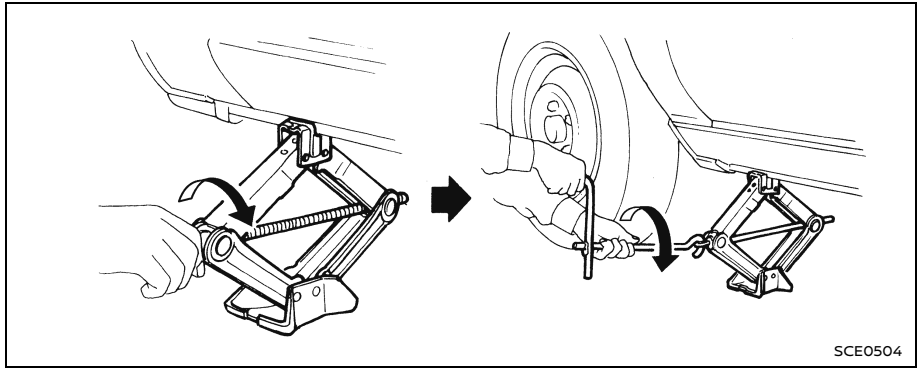

2. Loosen each wheel nut one or two turns by turning counterclockwise with the wheel nut wrench. **Do not remove the wheel nuts until the tire is off the ground.**
3. To lift the vehicle, securely hold the jack lever and rod with both hands as shown above. Carefully raise the vehicle until the tire clears the ground. Remove the wheel nuts, and then remove the tire.

9 Maintenance and schedules

Maintenance requirement 366
- Basic information 366
- General maintenance 366
- Scheduled maintenance 366
- Where to go for service 366

General maintenance 366
- Basic information 366
- Explanation of general maintenance items 366

Explanation of scheduled maintenance items 369
- Basic information 369
- Emission control system maintenance 369
- Chassis and body maintenance 370

Maintenance schedules 370
- Basic information 370
- Additional maintenance items for severe operating conditions 370
- Oil control system 371

Standard maintenance 372
- Basic information 372
- Maintenance schedules 372

MAINTENANCE REQUIREMENT

BASIC INFORMATION

Some day-to-day and regular maintenance is essential to maintain your vehicle in good mechanical condition, as well as its emission and engine performance.

It is the owner's responsibility to make sure that the scheduled maintenance, as well as general maintenance, is performed.

As the vehicle owner, you are the only one who can ensure that your vehicle receives the proper maintenance. You are a vital link in the maintenance chain.

GENERAL MAINTENANCE

General maintenance includes those items which should be checked during normal day-to-day operation. They are essential for proper vehicle operation. It is your responsibility to perform these procedures regularly as prescribed.

Performing general maintenance checks requires minimal mechanical skill and only a few general automotive tools.

These checks or inspections can be done by yourself, a qualified technician or, if you prefer, a NISSAN dealer.

SCHEDULED MAINTENANCE

The maintenance items listed in this section are required to be serviced at regular intervals. However, under severe driving conditions, additional or more frequent maintenance will be required.

WHERE TO GO FOR SERVICE

If maintenance service is required or your vehicle appears to malfunction, have the systems checked and serviced. It is recommended you visit a NISSAN dealer for this service.

NISSAN technicians are well-trained specialists and are kept up to date with the latest service information through technical bulletins, service tips and training programs. They are completely qualified to work on NISSAN vehicles **before** work begins.

If your vehicle is involved in a collision, it is recommended that you ask your NISSAN dealer where the nearest NISSAN Certified Collision Center is located, or go to http://collision.nissanusa.com.

You can be confident that a NISSAN dealer's service department can perform the service needed to meet the maintenance requirements on your vehicle.

GENERAL MAINTENANCE

BASIC INFORMATION

During the normal day-to-day operation of the vehicle, general maintenance should be performed regularly as prescribed in this section. If you detect any unusual sounds, vibrations or smells, be sure to check for the cause and have it checked promptly. In addition, it is recommended you visit a NISSAN dealer if you think that repairs are required.

When performing any checks or maintenance work, closely observe "Maintenance precautions" (P.329) of this manual.

EXPLANATION OF GENERAL MAINTENANCE ITEMS

Basic information

Additional information on the following items with "*" is found in the "8. Do-it-yourself" section of this manual.

Outside the vehicle

The maintenance items listed here should be performed from time to time, unless otherwise specified.

Doors and engine hood: Check that all doors and the engine hood, operate properly. Also ensure that all latches lock securely. Lubricate hinges, latches, latch

pins, rollers and links if necessary. Make sure that the secondary latch keeps the hood from opening when the primary latch is released.

When driving in areas using road salt or other corrosive materials, check lubrication frequently.

Lights*: Clean the headlights on a regular basis. Make sure that the headlights, stop lights, tail lights, turn signal lights, and other lights are all operating properly and installed securely. Also check headlight aim.

Road wheel nuts (lug nuts)*: When checking the tires, make sure no wheel nuts are missing, and check for any loose wheel nuts. Tighten if necessary.

Tire rotation*: Tires cannot be rotated on this vehicle because the front tires are a different size and/or wheel rim offset than the rear tires.

Tires*: Check the pressure with a gauge often and always prior to long distance trips. If necessary, adjust the pressure in all tires, including the spare, to the pressure specified. Check carefully for damage, cuts or excessive wear.

Tire Pressure Monitoring System (TPMS) transmitter components: Replace the TPMS transmitter grommet seal, valve core and cap when the tires are replaced due to wear or age.

Wheel alignment and balance: If the vehicle should pull to either side while driving on a straight and level road, or if you detect uneven or abnormal tire wear, there may be a need for wheel alignment.

If the steering wheel or seat vibrates at normal highway speeds, wheel balancing may be needed.

For additional information regarding tires, refer to "Important Tire Safety Information" (US) or "Tire Safety Information" (Canada) in the NISSAN Warranty Information Booklet.

Windshield: Clean the windshield on a regular basis. Check the windshield at least every six months for cracks or other damage. Have a damaged windshield repaired by a qualified repair facility. It is recommended that you have a damaged windshield repaired by a NISSAN dealer, or a NISSAN Certified Collision Center. To locate a collision center in your area, refer to http://collision.nissanusa.com.

Windshield wiper blades*: Check for cracks or wear if they do not wipe properly.

Inside the vehicle

The maintenance items listed here should be checked on a regular basis, such as when performing scheduled maintenance, cleaning the vehicle, etc.

Accelerator pedal: Check the pedal for smooth operation and make sure the pedal does not catch or require uneven effort. Keep the floor mat away from the pedal.

Automatic transmission P (Park) mechanism: On a fairly steep hill, check that your vehicle is held securely with the shift lever in the P (Park) position without applying any brakes.

Brake pedal: Check the pedal for smooth operation. If the brake pedal suddenly goes down further than normal, the pedal feels spongy or the vehicle seems to take longer to stop, have your vehicle checked immediately. It is recommended you visit a NISSAN dealer for this service. Keep the floor mat away from the pedal.

Brakes: Check that the brakes do not pull the vehicle to one side when applied.

Parking brake: Check the parking brake operation regularly. The vehicle should be securely held on a fairly steep hill with only the parking brake applied. If the parking brake needs adjusted, it is recommended you visit a NISSAN dealer for this service.

Seats: Check seat position controls such as seat adjusters, seatback recliner, etc. to

ensure they operate smoothly and that all latches lock securely in every position. Check that the head restraints move up and down smoothly and that the locks (if so equipped) hold securely in all latched positions.

Seat belts: Check that all parts of the seat belt system (for example, buckles, anchors, adjuster and retractors) operate properly and smoothly, and are installed securely. Check the belt webbing for cuts, fraying, wear or damage.

Steering wheel: Check for changes in the steering conditions, such as excessive free play, hard steering or strange noises.

Warning lights and chimes: Make sure that all warning lights and chimes are operating properly.

Windshield defroster: Check that the air comes out of the defroster outlets properly and in sufficient quantity when operating the heater or air conditioner.

Windshield wiper and washer*: Check that the wipers and washer operate properly and that the wipers do not streak.

Under the hood and vehicle

The maintenance items listed here should be checked periodically (for example, each time you check the engine oil or refuel).

Battery*: Check the fluid level in each cell. It should be between the MAX and MIN lines. Vehicles operated in high temperatures or under severe condition require frequent checks of the battery fluid level.

NOTE:

Care should be taken to avoid situations that can lead to potential battery discharge and potential no-start conditions such as:

1. **Installation or extended use of electronic accessories that consume battery power when the engine is not running (Phone chargers, GPS, DVD players, etc.)**
2. **Vehicle is not driven regularly and/or only driven short distances.**

In these cases, the battery may need to be charged to maintain battery health.

Brake and clutch fluid level*: Make sure that the brake and clutch fluid level is between the MAX and MIN lines on the reservoir.

Engine coolant level*: Check the coolant level when the engine is cold.

Intercooler coolant level*: Check the coolant level when the engine is cold.

Engine drive belts*: Make sure that no belt is frayed, worn, cracked or oily.

Engine oil level*: Check the level after parking the vehicle on a level spot and turning off the engine. Wait more than 15 minutes for the oil to drain back into the oil pan.

Exhaust system: Make sure there are no loose supports, cracks or holes. If the sound of the exhaust seems unusual or there is a smell of exhaust fumes, immediately have the exhaust system inspected. It is recommended you visit a NISSAN dealer for this service. (See "Precautions when starting and driving" (P.190).)

Fluid leaks: Check under the vehicle for fuel, oil, water or other fluid leaks after the vehicle has been parked for a while. Water dripping from the air conditioner after use is normal. If you should notice any leaks or if gasoline fumes are evident, check for the cause and have it corrected immediately.

Radiator and hoses: Check the front of the radiator and clean off any dirt, insects, leaves, etc., that may have accumulated. Make sure the hoses have no cracks, deformation, rot or loose connections.

Underbody: The underbody is frequently exposed to corrosive substances such as those used on icy roads or to control dust. It is very important to remove these substances, otherwise rust will form on the floor pan, frame, fuel lines and around the exhaust system. At the end of winter, the underbody should be thoroughly flushed

with plain water, being careful to clean those areas where mud and dirt may accumulate. For additional information, see "Cleaning exterior" (P.318).

Windshield washer fluid*: Check that there is adequate fluid in the reservoir.

EXPLANATION OF SCHEDULED MAINTENANCE ITEMS

BASIC INFORMATION

The following descriptions are provided to give you a better understanding of the scheduled maintenance items that should be regularly checked or replaced. The maintenance schedule indicates at which mileage/time intervals each item requires service.

In addition to scheduled maintenance, your vehicle requires that some items be checked during normal day-to-day operation. Refer to "General maintenance" (P.366).

Items marked with "*" are recommended by NISSAN for reliable vehicle operation. You are not required to perform maintenance on these items in order to maintain the warranties which come with your vehicle. Other maintenance items and intervals are required.

When applicable, additional information can be found in the "8. Do-it yourself" section of this manual.

NOTE:

NISSAN does not advocate the use of non-OEM approved aftermarket flushing systems and strongly advises against performing these services on a NISSAN product. Many of the aftermarket flushing systems use non-OEM approved chemicals or solvents, the use of which has not been validated by NISSAN.

For recommended fuel, lubricants, fluids, grease, and refrigerant, refer to "Capacities and recommended fluids/lubricants" (P.387)of this manual.

EMISSION CONTROL SYSTEM MAINTENANCE

Engine drive belts*:

Check engine drive belts for wear, fraying or cracking and for proper tension. Replace any damaged drive belts.

Air cleaner filter:

Replace two air cleaner filters at specified intervals. When driving for prolonged periods in dusty conditions, check/replace both air cleaner filters more frequently.

Engine coolant*:

Replace coolant at the specified interval. When adding or replacing coolant, be sure to use only Genuine NISSAN Long Life Antifreeze/Coolant (blue) or equivalent with the proper mixture. (Refer to "Engine cooling system" (P.331) to determine the proper mixture for your area.)

NOTE:

Mixing any other type of coolant or the use of non-distilled water may reduce the recommended service interval of the coolant.

Intercooler coolant:

Intercooler coolant is maintenance-free.

Engine oil and oil filter:

Replace engine oil and oil filter at the specified intervals. For recommended oil grade and viscosity refer to "Capacities and recommended fluids/lubricants" (P.387).

Engine valve clearance*:

Inspect only if valve noise increases. Adjust valve clearance if necessary.

Fuel tank vapor vent system*:

Check vapor lines for leaks or looseness. Tighten connections or replace parts as necessary.

Fuel lines/connections*:

Check the fuel hoses, piping and connections for leaks, looseness, or deterioration. Tighten connections or replace parts as necessary.

Spark plugs:

Replace at specified intervals. Install new plugs of the type as originally equipped.

CHASSIS AND BODY MAINTENANCE

Brake lines and cables:

Visually inspect for proper installation. Check for chafing, cracks, deterioration, and signs of leaking. Replace any deteriorated or damaged parts immediately.

Brake pads, rotors:

Check for wear, deterioration and fluid leaks. Replace any deteriorated or damaged parts immediately.

Exhaust system:

Visually inspect the exhaust pipes, muffler and hangers for leaks, cracks, deterioration, and damage. Tighten connections or replace parts as necessary.

In-cabin microfilter:

Replace at specified intervals. When driving for prolonged periods in dusty conditions, replace the filter more frequently.

Propeller shaft(s):

Check for damage, looseness, and grease leakage.

Steering gear and linkage, axle and suspension parts, drive shaft boots:

Check for damage, looseness, and leakage of oil or grease. Under severe driving conditions, inspect more frequently.

Tire rotation:

Tires cannot be rotated on this vehicle because the front tires are a different size and/or wheel rim offset than the rear tires.

Transmission fluid/oil, differential oil:

Visually inspect for signs of leakage at specified intervals.

BASIC INFORMATION

To help ensure smooth, safe and economical driving, NISSAN provides two maintenance schedules that may be used, depending upon the conditions in which you usually drive. These schedules contain both distance and time intervals, up to 120,000 miles (192,000 km)/144 months. For most people, the odometer reading will indicate when service is needed. However, if you drive very little, your vehicle should be serviced at the regular time intervals shown in the schedule.

After 120,000 miles (192,000 km)/144 months, continue maintenance at the same mileage/time intervals.

ADDITIONAL MAINTENANCE ITEMS FOR SEVERE OPERATING CONDITIONS

Additional maintenance items for severe operating conditions; should be performed on vehicles that are driven under especially demanding conditions. Additional maintenance items should be performed if you primarily operate your vehicle under the following conditions:

- Repeated short trips of less than 5 miles (8 km).

- Repeated short trips of less than 10 miles (16 km) with outside temperatures remaining below freezing.
- Operating in hot weather in stop-and-go “rush hour” traffic.
- Extensive idling and/or low speed driving for long distances, such as police, taxi or door-to-door delivery use.
- Driving in dusty conditions.
- Driving on rough, muddy or salt spread roads.
- Using a car-top carrier.

If your vehicle is mainly operated under the severe conditions, follow the severe maintenance intervals shown in the maintenance schedule.

OIL CONTROL SYSTEM

Your vehicle is equipped with oil control system. It calculates engine oil and filter change interval based on driving conditions. Driving in severe conditions will shorten the engine oil and filter change interval. If the oil replacement indicator is displayed, please change the engine oil and filter within two weeks or less than 500 miles (800 km). After replacing the engine oil, reset the display.

STANDARD MAINTENANCE

BASIC INFORMATION

The following shows the maintenance schedule.

Choose the maintenance schedule needed based on your vehicle driving conditions.

After 120,000 miles (192,000 km)/144 months, continue maintenance at the same mileage/time interval.

MAINTENANCE SCHEDULES

5,000 Miles/6 Months/8,000 Km

Standard maintenance:

- Not Applicable. Proceed to next interval.

Severe maintenance:

Inspections:

- Brake pads and rotors
- Exhaust system
- Steering gear and linkage
- Axle and suspension parts
- Drive shaft boots
- Propeller shaft

10,000 Miles/12 Months/16,000 Km

Standard maintenance:

Inspections:

- Automatic transmission fluid (1)
- Brake lines and cables
- Brake pads and rotors
- Manual transmission gear oil
- Differential gear oil (Models without Limited Slip Differential)
- Differential gear oil (Models with Limited Slip Differential)
- Drive shaft boots
- Propeller shaft
- Intelligent Key battery* (2)

Essential:

- Replace engine oil and filter (3)
- Replace In-cabin microfilter

Severe maintenance:

Inspections:

- Brake pads and rotors
- Exhaust system
- Steering gear and linkage
- Axle and suspension parts
- Drive shaft boots
- Propeller shaft

Essential:

- Replace brake fluid

(1) Request the dealer to inspect the fluid deterioration data using a CONSULT. If the deterioration data is more than 77000, replace the AT fluid.
(2) Performed based on the number of service months only.
(3) If the oil replacement indicator is displayed, please change the engine oil and filter within two weeks or less than 500 miles (800 km). After replacing the engine oil, reset the display.
* Maintenance items and intervals with "*" are recommended by NISSAN for reliable vehicle operation. The owner need not perform such maintenance in order to maintain the emission warranty or manufacturer recall liability. Other maintenance items and intervals are required.

15,000 Miles/18 Months/24,000 Km

Standard maintenance:
Not applicable. Proceed to the next interval.
Severe maintenance:
Inspections:
- Brake pads and rotors
- Exhaust system
- Steering gear and linkage
- Axle and suspension parts
- Drive shaft boots
- Propeller shaft

20,000 Miles/24 Months/32,000 Km

Standard maintenance:
Inspections:
- Automatic transmission fluid (1)
- Brake lines and cables
- Brake pads and rotors
- Fuel tank vapor vent system*
- Fuel lines/connections*
- Exhaust system
- Steering gear and linkage
- Axle and suspension parts
- Manual transmission gear oil
- Differential gear oil (Models without Limited Slip Differential)
- Drive shaft boots
- Propeller shaft

Essential:
- Replace differential gear oil (Models with Limited Slip Differential)
- Replace brake fluid
- Replace engine oil and filter (2)
- Replace In-cabin microfilter
- Replace Intelligent Key battery* (3)

Severe maintenance:
Inspections:
- Brake pads and rotors
- Exhaust system
- Steering gear and linkage
- Axle and suspension parts
- Drive shaft boots
- Propeller shaft

Essential:
- Replace automatic transmission fluid
- Replace brake fluid

(1) Request the dealer to inspect the fluid deterioration data using a CONSULT. If the deterioration data is more than 77000, replace the AT fluid.
(2) If the oil replacement indicator is displayed, please change the engine oil and filter within two weeks or less than 500 miles (800 km). After replacing the engine oil, reset the display.
(3) Performed based on the number of service months only.
* Maintenance items and intervals with "*" are recommended by NISSAN for reliable vehicle operation. The owner need not perform such maintenance in order to maintain the emission warranty or manufacturer recall liability. Other maintenance items and intervals are required.

25,000 Miles/30 Months/40,000 Km

Standard maintenance:

- Not Applicable. Proceed to next interval.

Severe maintenance:

Inspections:

- Brake pads and rotors
- Exhaust system
- Steering gear and linkage
- Axle and suspension parts
- Drive shaft boots
- Propeller shaft

30,000 Miles/36 Months/48,000 Km

Standard maintenance:

Inspections:

- Automatic transmission fluid (1)
- Brake lines and cables
- Brake pads and rotors
- Manual transmission gear oil
- Differential gear oil (Models without Limited Slip Differential)
- Differential gear oil (Models with Limited Slip Differential)
- Drive shaft boots
- Propeller shaft

Essential:

- Replace air cleaner filters (2)
- Replace engine oil and filter (3)
- Replace in-cabin microfilter
- Replace intelligent Key battery* (4)

Severe maintenance:

Inspections:

- Brake pads and rotors
- Exhaust system
- Steering gear and linkage
- Axle and suspension parts
- Drive shaft boots
- Propeller shaft

Essential:

- Replace brake fluid

(1) Request the dealer to inspect the fluid deterioration data using a CONSULT. If the deterioration data is more than 77000, replace the AT fluid.
(2) Two filter replacement is required. If operating mainly in dusty conditions, more frequent maintenance may be required.
(3) If the oil replacement indicator is displayed, please change the engine oil and filter within two weeks or less than 500 miles (800 km). After replacing the engine oil, reset the display.
(4) Performed based on the number of service months only.
* Maintenance items and intervals with "*" are recommended by NISSAN for reliable vehicle operation. The owner need not perform such maintenance in order to maintain the emission warranty or manufacturer recall liability. Other maintenance items and intervals are required.

35,000 Miles/42 Months/56,000 Km

Standard maintenance:

- Not Applicable. Proceed to next interval.

Severe maintenance:

Inspections:

- Brake pads and rotors
- Exhaust system
- Steering gear and linkage
- Axle and suspension parts
- Drive shaft boots
- Propeller shaft

40,000 Miles/48 Months/64,000 Km

Standard maintenance:

Inspections:

- Automatic transmission fluid (1)
- Brake lines and cables
- Brake pads and rotors
- Fuel tank vapor vent system*
- Fuel lines/connections*
- Exhaust system
- Steering gear and linkage
- Axle and suspension parts
- Drive shaft boots
- Propeller shaft
- Manual transmission gear oil
- Differential gear oil (Models without Limited Slip Differential)

Essential:

- Replace differential gear oil (Models with Limited Slip Differential)
- Replace brake fluid
- Replace engine oil and filter (2)
- Replace In-cabin microfilter
- Replace Intelligent Key battery* (3)

Severe maintenance:

Inspections:

- Brake pads and rotors
- Exhaust system
- Steering gear and linkage
- Axle and suspension parts
- Drive shaft boots
- Propeller shaft

Essential:

- Replace automatic transmission fluid
- Replace brake fluid

(1) Request the dealer to inspect the fluid deterioration data using a CONSULT. If the deterioration data is more than 77000, replace the AT fluid.
(2) If the oil replacement indicator is displayed, please change the engine oil and filter within two weeks or less than 500 miles (800 km). After replacing the engine oil, reset the display.
(3) Performed based on the number of service months only.
* Maintenance items and intervals with "*" are recommended by NISSAN for reliable vehicle operation. The owner need not perform such maintenance in order to maintain the emission warranty or manufacturer recall liability. Other maintenance items and intervals are required.

45,000 Miles/54 Months/72,000 Km

Standard maintenance:
Not applicable. Proceed to the next interval.
Severe maintenance:
Inspections:
- Brake pads and rotors
- Exhaust system
- Steering gear and linkage
- Axle and suspension parts
- Drive shaft boots
- Propeller shaft

50,000 Miles/60 Months/80,000 Km

Standard maintenance:
Inspections:
- Automatic transmission fluid (1)
- Brake lines and cables
- Brake pads and rotors
- Manual transmission gear oil
- Differential gear oil (Models without Limited Slip Differential)
- Differential gear oil (Models with Limited Slip Differential)
- Drive shaft boots
- Propeller shaft

Essential:
- Replace engine oil and filter (2)
- Replace In-cabin microfilter
- Replace Intelligent Key battery* (3)

Severe maintenance:
Inspections:
- Brake pads and rotors
- Exhaust system
- Steering gear and linkage
- Axle and suspension parts
- Drive shaft boots
- Propeller shaft

Essential:
- Replace brake fluid

(1) Request the dealer to inspect the fluid deterioration data using a CONSULT. If the deterioration data is more than 77000, replace the AT fluid.
(2) If the oil replacement indicator is displayed, please change the engine oil and filter within two weeks or less than 500 miles (800 km). After replacing the engine oil, reset the display.
(3) Performed based on the number of service months only.
* Maintenance items and intervals with "*" are recommended by NISSAN for reliable vehicle operation. The owner need not perform such maintenance in order to maintain the emission warranty or manufacturer recall liability. Other maintenance items and intervals are required.

55,000 Miles/66 Months/88,000 Km

Standard maintenance:

- Not Applicable. Proceed to next interval.

Severe maintenance:

Inspections:

- Brake pads and rotors
- Exhaust system
- Steering gear and linkage
- Axle and suspension parts
- Drive shaft boots
- Propeller shaft

60,000 Miles/72 Months/96,000 Km

Standard maintenance:

Inspections:

- Automatic transmission fluid (1)
- Brake lines and cables
- Brake pads and rotors
- Engine drive belts* (2)
- Fuel tank vapor vent system*
- Fuel lines/connections*
- Exhaust system
- Steering gear and linkage
- Drive shaft boots
- Propeller shaft
- Axle and suspension parts
- Manual transmission gear oil
- Differential gear oil (Models without Limited Slip Differential)

Essential:

- Replace differential gear oil (Models with Limited Slip Differential)
- Replace air cleaner filters (3)
- Replace brake fluid
- Replace engine oil and filter (4)
- Replace in-cabin microfilter
- Replace intelligent Key battery* (5)

Severe maintenance:

Inspections:

- Brake pads and rotors
- Exhaust system
- Steering gear and linkage
- Axle and suspension parts
- Drive shaft boots
- Propeller shaft

Essential:

- Replace automatic transmission fluid
- Replace brake fluid

(1) Request the dealer to inspect the fluid deterioration data using a CONSULT. If the deterioration data is more than 77000, replace the AT fluid.
(2) Replace the drive belts if found damaged.
(3) Two filter replacement is required. If operating mainly in dusty conditions, more frequent maintenance may be required.
(4) If the oil replacement indicator is displayed, please change the engine oil and filter within two weeks or less than 500 miles (800 km). After replacing the engine oil, reset the display.
(5) Performed based on the number of service months only.
* Maintenance items and intervals with "*" are recommended by NISSAN for reliable vehicle operation. The owner need not perform such maintenance in order to maintain the emission warranty or manufacturer recall liability. Other maintenance items and intervals are required.

65,000 Miles/78 Months/104,000 Km

Standard maintenance:

- Not Applicable. Proceed to next interval.

Severe maintenance:

Inspections:

- Brake pads and rotors
- Exhaust system
- Steering gear and linkage
- Axle and suspension parts
- Drive shaft boots
- Propeller shaft

70,000 Miles/84 Months/112,000 Km

Standard maintenance:

Inspections:

- Automatic transmission fluid (1)
- Brake lines and cables
- Brake pads and rotors
- Engine drive belts* (2)
- Manual transmission gear oil
- Differential gear oil (Models without Limited Slip Differential)
- Differential gear oil (Models with Limited Slip Differential)
- Drive shaft boots
- Propeller shaft

Essential:

- Replace engine oil and filter (3)
- Replace In-cabin microfilter
- Replace Intelligent Key battery* (4)

Severe maintenance:

Inspections:

- Brake pads and rotors
- Exhaust system
- Steering gear and linkage
- Axle and suspension parts
- Drive shaft boots
- Propeller shaft

Essential:

- Replace brake fluid

(1) Request the dealer to inspect the fluid deterioration data using a CONSULT. If the deterioration data is more than 77000, replace the AT fluid.
(2) Replace the drive belts if found damaged.
(3) If the oil replacement indicator is displayed, please change the engine oil and filter within two weeks or less than 500 miles (800 km). After replacing the engine oil, reset the display.
(4) Performed based on the number of service months only.
* Maintenance items and intervals with "*" are recommended by NISSAN for reliable vehicle operation. The owner need not perform such maintenance in order to maintain the emission warranty or manufacturer recall liability. Other maintenance items and intervals are required.

75,000 Miles/90 Months/120,000 Km

Standard maintenance:
Not applicable. Proceed to the next interval.
Severe maintenance:
Inspections:
- Brake pads and rotors
- Exhaust system
- Steering gear and linkage
- Axle and suspension parts
- Drive shaft boots
- Propeller shaft

80,000 Miles/96 Months/128,000 Km

Standard maintenance:
Inspections:
- Automatic transmission fluid (1)
- Brake lines and cables
- Brake pads and rotors
- Engine drive belts* (2)
- Fuel tank vapor vent system*
- Fuel lines/connections*
- Exhaust system
- Steering gear and linkage
- Axle and suspension parts
- Drive shaft boots
- Propeller shaft
- Manual transmission gear oil
- Differential gear oil (Models without Limited Slip Differential)

Essential:
- Replace differential gear oil (Models with Limited Slip Differential)
- Replace brake fluid
- Replace engine oil and filter (3)
- Replace In-cabin microfilter
- Replace Intelligent Key battery* (4)

Severe maintenance:
Inspections:
- Brake pads and rotors
- Exhaust system
- Steering gear and linkage
- Axle and suspension parts
- Drive shaft boots
- Propeller shaft

Essential:
- Replace automatic transmission fluid
- Replace brake fluid

(1) Request the dealer to inspect the fluid deterioration data using a CONSULT. If the deterioration data is more than 77000, replace the AT fluid.
(2) Replace the drive belts if found damaged.
(3) If the oil replacement indicator is displayed, please change the engine oil and filter within two weeks or less than 500 miles (800 km). After replacing the engine oil, reset the display.
(4) Performed based on the number of service months only.
* Maintenance items and intervals with "*" are recommended by NISSAN for reliable vehicle operation. The owner need not perform such maintenance in order to maintain the emission warranty or manufacturer recall liability. Other maintenance items and intervals are required.

85,000 Miles/102 Months/136,000 Km

Standard maintenance:

- Not Applicable. Proceed to next interval.

Severe maintenance:

Inspections:

- Brake pads and rotors
- Exhaust system
- Steering gear and linkage
- Axle and suspension parts
- Drive shaft boots
- Propeller shaft

90,000 Miles/108 Months/144,000 Km

Standard maintenance:

Inspections:

- Automatic transmission fluid (1)
- Brake lines and cables
- Brake pads and rotors
- Engine drive belts* (2)
- Manual transmission gear oil
- Differential gear oil (Models without Limited Slip Differential)
- Differential gear oil (Models with Limited Slip Differential)
- Drive shaft boots
- Propeller shaft

Essential:

- Replace air cleaner filters (3)
- Replace engine oil and filter (4)
- Replace in-cabin microfilter
- Replace intelligent Key battery* (5)

Severe maintenance:

Inspections:

- Brake pads and rotors
- Exhaust system
- Steering gear and linkage
- Axle and suspension parts
- Drive shaft boots
- Propeller shaft

Essential:

- Replace brake fluid

(1) Request the dealer to inspect the fluid deterioration data using a CONSULT. If the deterioration data is more than 77000, replace the AT fluid.
(2) Replace the drive belts if found damaged.
(3) Two filter replacement is required. If operating mainly in dusty conditions, more frequent maintenance may be required.
(4) If the oil replacement indicator is displayed, please change the engine oil and filter within two weeks or less than 500 miles (800 km). After replacing the engine oil, reset the display.
(5) Performed based on the number of service months only.
* Maintenance items and intervals with "*" are recommended by NISSAN for reliable vehicle operation. The owner need not perform such maintenance in order to maintain the emission warranty or manufacturer recall liability. Other maintenance items and intervals are required.

95,000 Miles/114 Months/152,000 Km

Standard maintenance:

- Not Applicable. Proceed to next interval.

Severe maintenance:

Inspections:

- Brake pads and rotors
- Exhaust system
- Steering gear and linkage
- Axle and suspension parts
- Drive shaft boots
- Propeller shaft

100,000 Miles/120 Months/160,000 Km

Standard maintenance:

Inspections:

- Automatic transmission fluid (1)
- Brake lines and cables
- Brake pads and rotors
- Engine drive belts* (2)
- Fuel tank vapor vent system*
- Fuel lines/connections*
- Exhaust system
- Steering gear and linkage
- Axle and suspension parts
- Drive shaft boots
- Propeller shaft
- Manual transmission gear oil
- Differential gear oil (Models without Limited Slip Differential)

Essential:

- Replace differential gear oil (Models with Limited Slip Differential)
- Replace brake fluid
- Replace engine oil and filter (3)
- Replace In-cabin microfilter
- Replace Intelligent Key battery* (4)

Severe maintenance:

Inspections:

- Brake pads and rotors
- Exhaust system
- Steering gear and linkage
- Axle and suspension parts
- Drive shaft boots
- Propeller shaft

Essential:

- Replace automatic transmission fluid
- Replace brake fluid

(1) Request the dealer to inspect the fluid deterioration data using a CONSULT. If the deterioration data is more than 77000, replace the AT fluid.
(2) Replace the drive belts if found damaged.
(3) If the oil replacement indicator is displayed, please change the engine oil and filter within two weeks or less than 500 miles (800 km). After replacing the engine oil, reset the display.
(4) Performed based on the number of service months only.
* Maintenance items and intervals with "*" are recommended by NISSAN for reliable vehicle operation. The owner need not perform such maintenance in order to maintain the emission warranty or manufacturer recall liability. Other maintenance items and intervals are required.

105,000 Miles/126 Months/168,000 Km

Standard maintenance:
Essential:
- Replace spark plugs
- Replace engine coolant *(1)

Severe maintenance:
Inspections:
- Brake pads and rotors
- Exhaust system
- Steering gear and linkage
- Axle and suspension parts
- Drive shaft boots
- Propeller shaft

(1) First replacement interval is 105,000 miles (168,000 km) or 84 months. After first replacement, replace every 75,000 miles (120,000 km) or 60 months.
* Maintenance items and intervals with "*" are recommended by NISSAN for reliable vehicle operation. The owner need not perform such maintenance in order to maintain the emission warranty or manufacturer recall liability. Other maintenance items and intervals are required.

110,000 Miles/132 Months/176,000 Km

Standard maintenance:
Inspections:
- Automatic transmission fluid (1)
- Brake lines and cables
- Brake pads and rotors
- Engine drive belts* (2)
- Manual transmission gear oil
- Differential gear oil (Models without Limited Slip Differential)
- Differential gear oil (Models with Limited Slip Differential)
- Drive shaft boots
- Propeller shaft

Essential:
- Replace engine oil and filter (3)
- Replace In-cabin microfilter
- Replace Intelligent Key battery* (4)

Severe maintenance:
Inspections:
- Brake pads and rotors
- Exhaust system
- Steering gear and linkage
- Axle and suspension parts
- Drive shaft boots
- Propeller shaft

Essential:
- Replace brake fluid

(1) Request the dealer to inspect the fluid deterioration data using a CONSULT. If the deterioration data is more than 77000, replace the AT fluid.
(2) Replace the drive belts if found damaged.
(3) If the oil replacement indicator is displayed, please change the engine oil and filter within two weeks or less than 500 miles (800 km). After replacing the engine oil, reset the display.
(4) Performed based on the number of service months only.
* Maintenance items and intervals with "*" are recommended by NISSAN for reliable vehicle operation. The owner need not perform such maintenance in order to maintain the emission warranty or manufacturer recall liability. Other maintenance items and intervals are required.

115,000 Miles/138 Months/184,000 Km

Standard maintenance:

- Not Applicable. Proceed to next interval.

Severe maintenance:

Inspections:

- Brake pads and rotors
- Exhaust system
- Steering gear and linkage
- Axle and suspension parts
- Drive shaft boots
- Propeller shaft

120,000 Miles/144 Months/192,000 Km

Standard maintenance:

Inspections:

- Automatic transmission fluid (1)
- Brake lines and cables
- Brake pads and rotors
- Engine drive belts* (2)
- Fuel tank vapor vent system*
- Fuel lines/connections*
- Exhaust system
- Steering gear and linkage
- Axle and suspension parts
- Drive shaft boots
- Propeller shaft
- Manual transmission gear oil
- Differential gear oil (Models without Limited Slip Differential)

Essential:

- Replace differential gear oil (Models with Limited Slip Differential)
- Replace air cleaner filters (3)
- Replace brake fluid
- Replace engine oil and filter (4)
- Replace in-cabin microfilter
- Replace intelligent Key battery* (5)

Severe maintenance:

Inspections:

- Brake pads and rotors
- Exhaust system
- Steering gear and linkage
- Axle and suspension parts
- Drive shaft boots
- Propeller shaft

Essential:

- Replace automatic transmission fluid
- Replace brake fluid

: Maintenance items and intervals with "" are recommended by NISSAN for reliable vehicle operation. The owner need not perform such maintenance in order to maintain the emission warranty or manufacturer recall liability. Other maintenance items and intervals are required.
(1) Request the dealer to inspect the fluid deterioration data using a CONSULT. If the deterioration data is more than 77000, replace the AT fluid.
(2) Replace the drive belts if found damaged.
(3) Two filter replacement is required. If operating mainly in dusty conditions, more frequent maintenance may be required.
(4) If the oil replacement indicator is displayed, please change the engine oil and filter within two weeks or less than 500 miles (800 km). After replacing the engine oil, reset the display.
(5) Performed based on the number of service months only.
* Maintenance items and intervals with “*” are recommended by NISSAN for reliable vehicle operation. The owner need not perform such maintenance in order to maintain the emission warranty or manufacturer recall liability. Other maintenance items and intervals are required.

MEMO

10 Technical and consumer information

Capacities and recommended fluids/ lubricants 387
- Basic information 387
- Fuel 387
- Engine oil 387
- Engine coolant 387
- Intercooler coolant 388
- Automatic Transmission fluid 388
- Manual Transmission gear oil 388
- Differential gear oil 388
- Brake fluid 388
- Clutch fluid 388
- Multi-purpose grease 389
- Air conditioning system refrigerant 389
- Air conditioning system oil 389
- Window washer fluid 389
- Fuel information 389
- Engine oil and oil filter recommendation 392
- Air conditioning system refrigerant and oil recommendations 393

Specifications 394
- Engine 394
- Wheels and tires 395
- Dimensions 396

When traveling or registering in another country 397
Vehicle identification 397
- Vehicle Identification Number (VIN) plate 397
- Vehicle identification number (chassis number) 397
- Engine serial number 398
- F.M.V.S.S./C.M.V.S.S. certification label 398
- Emission control information label 398
- Tire and Loading Information label 399
- Air conditioner specification label 399

Installing front license plate 400
- Except for NISMO models 400
- For NISMO models 401

Removing air deflectors 402
Vehicle loading information 403
- Basic information 403
- Terms 403
- Vehicle load capacity 404
- Loading tips 405
- Measurement of weights 406

Towing a trailer 406
Flat towing your vehicle 407
- Flat towing 407

Uniform tire quality grading 407
Reporting safety defects 408
Readiness for Inspection/Maintenance (I/M) test 409
Emission control system warranty 410
Event Data Recorders (EDR) 410
Owner's Manual/Service Manual order information 411

CAPACITIES AND RECOMMENDED FLUIDS/LUBRICANTS

BASIC INFORMATION

The following are approximate capacities. The actual refill capacities may be a little different. When refilling, follow the procedure instructed in the "8. Do-it-yourself" section to determine the proper refill capacity.

FUEL

- See "Fuel information" (P.389).

Capacity (approximate)	
Metric Measure	62 L
US Measure	16-3/8 gal
Imperial Measure	13-5/8 gal

ENGINE OIL

Drain and refill

- For additional information, see "Changing engine oil and filter" (P.335).
- Genuine "NISSAN Motor Oil 0W-20 SP" (or equivalent) is recommended.
- If the above motor oil (or engine oil) is not available, a synthetic 0W-20 SP GF-6A motor oil (or engine oil) may be used.

  Damage caused by the use of motor oil (or engine oil) other than as recommended is not covered under NISSAN's New Vehicle Limited Warranty.

  For additional information, refer to "Engine oil and oil filter recommendation" (P.392).

Capacity (approximate)		
With oil filter change	Metric Measure	5.3 L
	US Measure	5-5/8 qt
	Imperial Measure	4-5/8 qt
Without oil filter change	Metric Measure	5.1 L
	US Measure	5-3/8 qt
	Imperial Measure	4-1/2 qt

ENGINE COOLANT

- Pre-diluted Genuine NISSAN Long Life Antifreeze/Coolant (blue) or equivalent

Automatic Transmission model		
Capacity (approximate)		
With reservoir	Metric Measure	9 L
	US Measure	9-1/2 qt
	Imperial Measure	7-7/8 qt

Manual Transmission model		
Capacity (approximate)		
With reservoir	Metric Measure	8.9 L
	US Measure	9-3/8 qt
	Imperial Measure	7-7/8 qt

NISMO models		
Capacity (approximate)		
With reservoir	Metric Measure	10.4 L
	US Measure	11 qt
	Imperial Measure	9-1/8 qt

Capacity (approximate)		
Reservoir	Metric Measure	0.6 L
	US Measure	5/8 qt
	Imperial Measure	1/2 qt

INTERCOOLER COOLANT

- Pre-diluted Genuine NISSAN Long Life Antifreeze/Coolant (blue) or equivalent

Automatic Transmission model		
Capacity (approximate)		
With reservoir	Metric Measure	2.9 L
	US Measure	3-1/8 qt
	Imperial Measure	2-1/2 qt

Manual Transmission model		
Capacity (approximate)		
With reservoir	Metric Measure	2.9 L
	US Measure	3-1/8 qt
	Imperial Measure	2-1/2 qt

NISMO models		
Capacity (approximate)		
With reservoir	Metric Measure	3.4 L
	US Measure	3-5/8 qt
	Imperial Measure	3 qt

Capacity (approximate)		
Reservoir	Metric Measure	0.2 L
	US Measure	1/4 qt
	Imperial Measure	1/8 qt

AUTOMATIC TRANSMISSION FLUID

- Genuine NISSAN Matic P ATF or equivalent
- NISSAN recommends using Genuine NISSAN Matic P ATF ONLY (or equivalent) in NISSAN automatic transmissions. Do not mix with other fluids. Using fluids that are not equivalent to Genuine NISSAN Matic P ATF may damage the automatic transmission. Damage caused by the use of fluids other than as recommended is not covered under the NISSAN's New Vehicle Limited Warranty.

MANUAL TRANSMISSION GEAR OIL

- Genuine NISSAN Manual Transmission Fluid (MTF) HQ Multi 75W-85
- If Genuine NISSAN Manual Transmission Fluid (MTF) HQ Multi is not available, API GL-4, Viscosity SAE 75W-85 may be used as a temporary replacement. However, use Genuine NISSAN Manual Transmission Fluid (MTF) HQ Multi as soon as it is available.

DIFFERENTIAL GEAR OIL

Without limited slip differential:

- Genuine NISSAN HYPOID FLUID·S1 GL-5 75W-80 or equivalent

With limited slip differential:

- Genuine NISSAN Differential Oil Hypoid LSD GL-5 80W-90 or equivalent conventional (non-synthetic) oil

BRAKE FLUID

- Genuine NISSAN Brake Fluid R35 Special II*1 *2 or equivalent DOT4

  *1: Never mix different types of fluids.

  *2: NISSAN recommends Genuine NISSAN Brake Fluid R35 Special II available at a NISSAN dealer.
- Refill to the proper oil level according to the instructions in the "8. Do-it-yourself" section.

CLUTCH FLUID

- Genuine NISSAN Brake Fluid R35 Special II*1 *2 or equivalent DOT4

  *1: Never mix different types of fluids.

  *2: NISSAN recommends Genuine NISSAN Brake Fluid R35 Special II available at a NISSAN dealer.

- Refill to the proper oil level according to the instructions in the "8. Do-it-yourself" section.

MULTI-PURPOSE GREASE

- NLGI No. 2 (Lithium soap base)

AIR CONDITIONING SYSTEM REFRIGERANT

- HFO-1234yf (R-1234yf)
- For additional information, see "Vehicle identification" (P.397) for air conditioner specification label.

AIR CONDITIONING SYSTEM OIL

- Compressor Oil SP-A2(PAG) or equivalent

WINDOW WASHER FLUID

- Genuine NISSAN Windshield Washer Concentrate Cleaner & Antifreeze or equivalent

FUEL INFORMATION

VR30DDTT engine

Use unleaded premium gasoline with an octane rating of at least 93 AKI (Anti-Knock Index) number (Research octane number 98).

If unleaded premium gasoline is not available, unleaded regular gasoline with an octane rating of at least 87 AKI (Research octane number 91) can be used, but only under the following precautions:

- Have the fuel tank filled only partially with unleaded regular gasoline, and fill up with unleaded premium as soon as possible.
- Avoid full throttle driving and abrupt acceleration.

However, for maximum vehicle performance, the use of unleaded premium gasoline is recommended.

⚠ CAUTION

- **Using a fuel other than that specified could adversely affect the emission control system, and may also affect warranty coverage.**
- **Under no circumstances should a leaded gasoline be used, because this will damage the three-way catalyst.**
- **Do not use a fuel containing more than 15% ethanol in your vehicle. Your vehicle is not designed to run on a fuel containing more than 15% ethanol. Using a fuel containing more than 15% ethanol in a vehicle not specifically designed for a fuel containing more than 15% ethanol can adversely affect the emission control devices and systems of the vehicle. Damage caused by such fuel is not covered by the NISSAN new vehicle limited warranty.**
- **Do not use fuel that contains the octane booster methylcyclopentadienyl manganese tricarbonyl (MMT). Using fuel containing MMT may adversely affect vehicle performance and vehicle emissions. Not all fuel dispensers are labeled to indicate MMT content, so you may have to consult your gasoline retailer for more details. Note that Federal and California laws prohibit the use of MMT in reformulated gasoline.**

- **U.S. government regulations require ethanol dispensing pumps to be identified by a small, square, orange and black label with the common abbreviation or the appropriate percentage for that region.**

Gasoline specifications

NISSAN recommends using gasoline that meets the World-Wide Fuel Charter (WWFC) specifications where it is available. Many of the automobile manufacturers developed this specification to improve emission system and vehicle performance. Ask your service station manager if the gasoline meets the World-Wide Fuel Charter (WWFC) specifications.

Reformulated gasoline

Some fuel suppliers are now producing reformulated gasolines. These gasolines are specially designed to reduce vehicle emissions. NISSAN supports efforts towards cleaner air and suggests that you use reformulated gasoline when available.

Gasoline containing oxygenates

Some fuel suppliers sell gasoline containing oxygenates such as ethanol, MTBE and methanol with or without advertising their presence. NISSAN does not recommend the use of fuels of which the oxygenate content and the fuel compatibility for your NISSAN cannot be readily determined. If in doubt, ask your service station manager.

If you use oxygenate-blend gasoline, please take the following precautions as the usage of such fuels may cause vehicle performance problems and/or fuel system damage.

- **The fuel should be unleaded and have an octane rating no lower than that recommended for unleaded gasoline.**
- **If an oxygenate-blend, excepting a methanol blend, is used, it should contain no more than 15% oxygenate.**
- **If a methanol blend is used, it should contain no more than 5% methanol (methyl alcohol, wood alcohol). It should also contain a suitable amount of appropriate cosolvents and corrosion inhibitors. If not properly formulated with appropriate cosolvents and corrosion inhibitors, such methanol blends may cause fuel system damage and/or vehicle performance problems. At this time, sufficient data is not available to ensure that all methanol blends are suitable for use in NISSAN vehicles.**

If any undesirable driveability problems such as engine stalling or hard hot starting are experienced after using oxygenate-blend fuels, immediately change to a non-oxygenate fuel or a fuel with a low blend of MTBE.

Take care not to spill gasoline during refueling. Gasoline containing oxygenates can cause paint damage.

E-15 fuel

E-15 fuel is a mixture of approximately 15% fuel ethanol and 85% unleaded gasoline. E-15 can only be used in vehicles designed to run on E-15 fuel. U.S. government regulations require fuel ethanol dispensing pumps to be identified with small, square, orange and black label with the common abbreviation or the appropriate percentage for that region.

E-85 fuel

E-85 fuel is a mixture of approximately 85% fuel ethanol and 15% unleaded gasoline. E-85 can only be used in a Flexible Fuel Vehicle (FFV). Do not use E-85 fuel in your vehicle. U.S. government regulations require fuel ethanol dispensing pumps to be identified by a small, square, orange

and black label with the common abbreviation or the appropriate percentage for that region.

Fuel containing MMT

MMT, or methylcyclopentadienyl manganese tricarbonyl, is an octane boosting additive. NISSAN does not recommend the use of fuel containing MMT. Such fuel may adversely affect vehicle performance, including the emissions control system. Note that while some fuel pumps label MMT content, not all do, so you may have to consult your gasoline retailer for more details.

Aftermarket fuel additives

NISSAN does not recommend the use of any aftermarket fuel additives (Example: fuel injector cleaner, octane booster, intake valve deposit removers, etc.) which are sold commercially. Many of these additives intended for gum, varnish or deposit removal may contain active solvent or similar ingredients that can be harmful to the fuel system and engine.

Octane rating tips

Using unleaded gasoline with an octane rating lower than recommended above can cause persistent, heavy spark knock. (Spark knock is a metallic rapping noise.) If severe, this can lead to engine damage. If you detect a persistent heavy spark knock even when using gasoline of the stated octane rating, or if you hear steady spark knock while holding a steady speed on level roads, it is recommended you have a NISSAN dealer correct the condition. Failure to correct the condition is misuse of the vehicle, for which NISSAN is not responsible.

Incorrect ignition timing will result in knocking, after-run or overheating. This in turn may cause excessive fuel consumption or damage to the engine. If any of the above symptoms are encountered, have your vehicle checked at a NISSAN dealer or other competent service facility.

However, now and then you may notice light spark knock for a short time while accelerating or driving up hills. This is no cause for concern, because you get the greatest fuel benefit when there is light spark knock for a short time under heavy engine load.

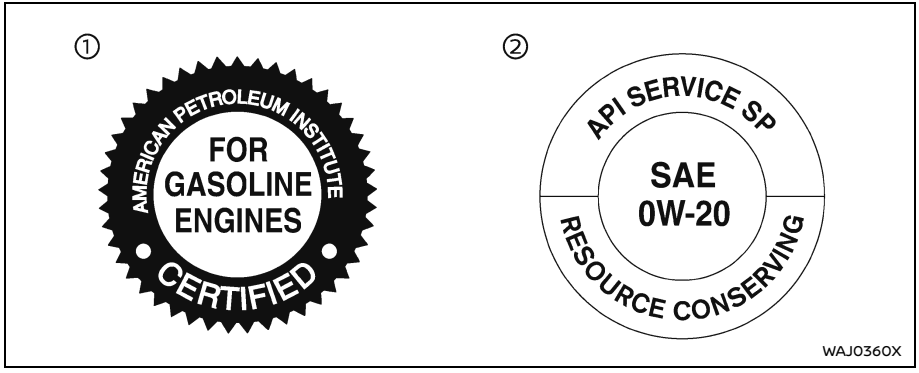

① API certification mark
② API service symbol

ENGINE OIL AND OIL FILTER RECOMMENDATION

Selecting the correct oil

It is essential to choose the correct grade, quality, and viscosity engine oil to ensure satisfactory engine life and performance, see "Capacities and recommended fluids/lubricants" (P.387). NISSAN recommends the use of an energy conserving oil in order to improve fuel economy.

Select only engine oils that meet the American Petroleum Institute (API) certification or International Lubricant Standardization and Approval Committee (ILSAC) certification and SAE viscosity standard. These oils have the API certification mark on the front of the container. Oils which do not have the specified quality label should not be used as they could cause engine damage.

NOTE:
It is recommended you visit a NISSAN dealer before any performance driving on closed circuit tracks. Obey all traffic laws when on public roads.

If driving on a circuit or closed track, set the oil amount range of the oil level gauge should be Hi to Hi - 9 mm.

Oil additives

NISSAN does not recommend the use of oil additives. The use of an oil additive is not necessary when the proper oil type is used and maintenance intervals are followed.

Oil which may contain foreign matter or has been previously used should not be used.

Oil viscosity

The engine oil viscosity or thickness changes with temperature. Because of this, it is important that the engine oil viscosity be selected based on the temperatures at which the vehicle will be operated before the next oil change. Choosing an oil viscosity other than that recommended could cause serious engine damage.

Selecting the correct oil filter

Your new vehicle is equipped with a high-quality genuine NISSAN oil filter. When replacing, use the genuine oil filter or its equivalent for the reason described in change intervals.

Change intervals

The oil and oil filter change intervals for your engine are based on the use of the

specified quality oils and filters. Oil and filter other than the specified quality, or oil and filter change intervals longer than recommended could reduce engine life. Damage to engines caused by improper maintenance or use of incorrect oil and filter quality and/or viscosity is not covered by the new NISSAN vehicle limited warranties.

Your engine was filled with a high quality engine oil when it was built. You do not have to change the oil before the first recommended change interval. Oil and filter change intervals depend upon how you use your vehicle.

AIR CONDITIONING SYSTEM REFRIGERANT AND OIL RECOMMENDATIONS

The air conditioner system in your NISSAN vehicle must be charged with the specified refrigerant HFO-1234yf (R-1234yf) and A/C system oil SP-A2(PAG) or the exact equivalent.

⚠ CAUTION

The use of any other refrigerant or oil will cause severe damage to the air conditioning system and will require the replacement of all air conditioner system components.

The refrigerant HFO-1234yf (R-1234yf) in your NISSAN vehicle will not harm the earth's ozone layer. Although this refrigerant does not affect the earth's atmosphere, certain government regulations require the recovery and recycling of any refrigerant during automotive air conditioner system service. Air conditioner system should only be serviced by trained and certified technicians to ensure proper and safe operation (SAE J2845). A NISSAN dealer has the trained technicians and equipment needed to recover and recycle your air conditioner system refrigerant. Only new and SAEJ2842 certified evaporator(s) shall be used as replacement parts.

A damaged or leaking air conditioning evaporator shall never be repaired or replaced with one removed from a used or salvaged vehicle. To replace a damaged or leaking evaporator, use only new and SAE J2842 certified evaporator(s). It is recommended that you visit a NISSAN dealer when servicing your air conditioner system.

SPECIFICATIONS

ENGINE

Model		VR30DDTT
Type		Gasoline, 4-cycle
Cylinder arrangement		6-cylinder, V-slanted at 60°
Bore × Stroke	Metric measure	86.0 mm× 86.0 mm
	US measure	3.386 in× 3.386 in
Displacement	Metric measure	2,997 cm^3
	US measure	182.88 cu in
Firing order		1-2-3-4-5-6
Idle speed Ignition timing (B.T.D.C.)	rpm degree/rpm	No adjustment is necessary.
Spark plug	Standard	DILKAR8K8G
Spark plug gap (Normal)	Metric measure	0.8 mm
	US measure	0.031 in
Camshaft operation		Timing chain

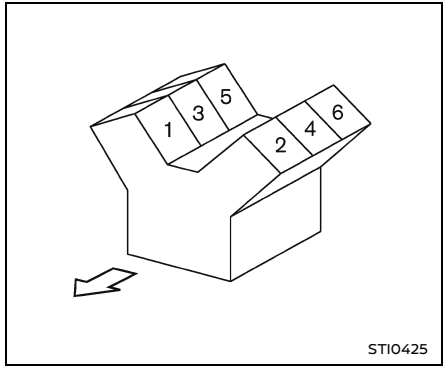

This spark ignition system complies with the Canadian standard ICES-002.

WHEELS AND TIRES

Road wheel

Type: Conventional		
Size	Offset Metric measure	Offset US measure
Front: 18 × 9J Rear: 18 × 9J	34 mm 15 mm	1.34 in 0.59 in
Front: 19 × 9.5J Rear: 19 × 10J	40 mm 30 mm	1.57 in 1.18 in
(NISMO models) Front: 19 × 10J Rear: 19 × 10.5J	33 mm 23 mm	1.30 in 0.91 in

Type: Spare		
Size	Offset Metric measure	Offset US measure
-(*)	-(*)	-(*)

*: The emergency tire puncture repair kit is supplied.

Tire

Type: Conventional		
Size	Pressure PSI [Cold]	Pressure kPa [Cold]
Front: 245/45R18 96W Rear: 245/45R18 96W	33	230
Front: 255/40R19 96W Rear: 275/35R19 96W	32 29	220 200
(NISMO models) Front: 255/40R19 100Y XL Rear: 285/35R19 103Y XL	 33 35	 230 240

Type: Spare		
Size	Pressure PSI [Cold]	Pressure kPa [Cold]
- (*)	- (*)	- (*)

*: The emergency tire puncture repair kit is supplied.

DIMENSIONS

	Metric measure	US measure
Overall length	4,400 mm	173.2 in
Overall width	1,845 mm 1,870 mm*3	72.6 in 73.6 in*3
Overall height	1,315 mm	51.8 in
Front tread	1,565 mm*1 1,555 mm*2 1,570 mm*3	61.6 in*1 61.2 in*2 61.8 in*3
Rear tread	1,595 mm*1 1,565 mm*2 1,580 mm*3	62.8 in*1 61.6 in*2 62.2 in*3
Wheel-base	2,550 mm	100.4 in

*1: 18-inch wheel models

*2: 19-inch wheel models (except for NISMO models)

*3: NISMO models

WHEN TRAVELING or REGISTERING IN ANOTHER COUNTRY

If you plan to travel in another country, you should first find out if the fuel available is suitable for your vehicle's engine.

Using fuel with too low an octane rating may cause engine damage. All gasoline vehicles must be operated with unleaded gasoline. Therefore, avoid taking your vehicle to areas where appropriate fuel is not available.

When transferring the registration of your vehicle to another country, state, province or district, it may be necessary to modify the vehicle to meet local laws and regulations.

The laws and regulations for motor vehicle emission control and safety standards vary according to the country, state, province or district; therefore, vehicle specifications may differ.

When any vehicle is to be taken into another country, state, province or district and registered, its modifications, transportation, and registration are the responsibility of the user. NISSAN is not responsible for any inconvenience that may result.

VEHICLE IDENTIFICATION

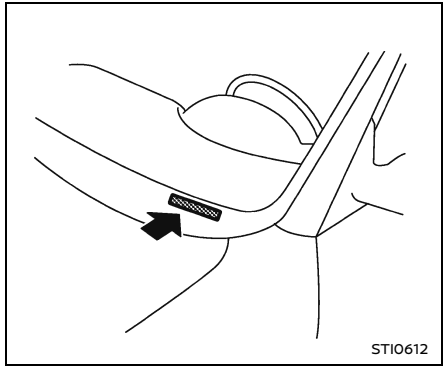

VEHICLE IDENTIFICATION NUMBER (VIN) PLATE

The vehicle identification number plate is attached as shown. This number is the identification for your vehicle and is used in the vehicle registration.

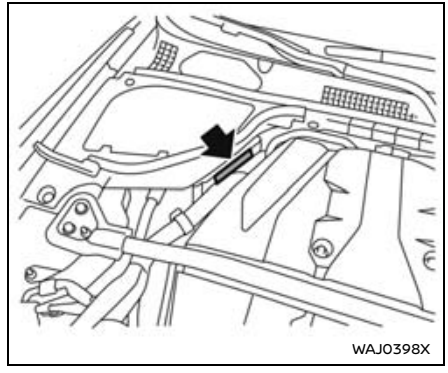

VEHICLE IDENTIFICATION NUMBER (chassis number)

The number is stamped as shown in the engine compartment.

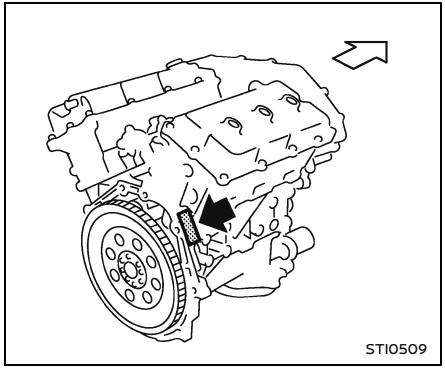

ENGINE SERIAL NUMBER

The number is stamped on the engine as shown.

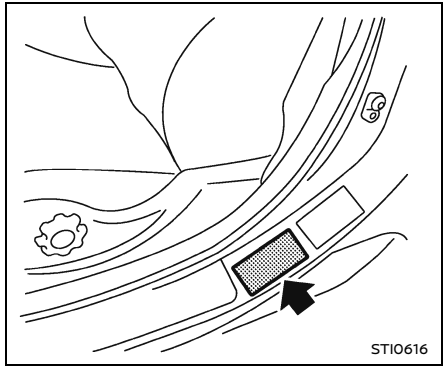

F.M.V.S.S./C.M.V.S.S. CERTIFICATION LABEL

The Federal/Canadian Motor Vehicle Safety Standards (F.M.V.S.S./C.M.V.S.S.) certification label is affixed as shown. This label contains valuable vehicle information, such as: Gross Vehicle Weight Ratings (GVWR), Gross Axle Weight Rating (GAWR), month and year of manufacture, Vehicle Identification Number (VIN), etc. Review it carefully.

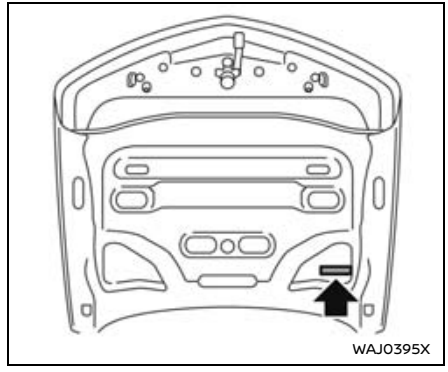

EMISSION CONTROL INFORMATION LABEL

The emission control information label is attached as shown.

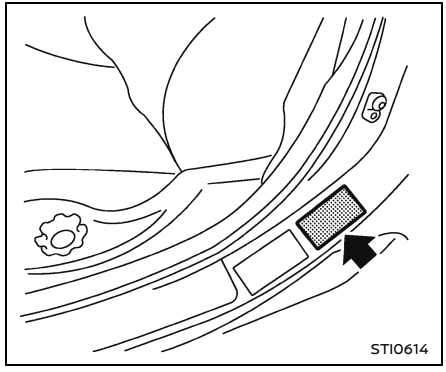

TIRE AND LOADING INFORMATION LABEL

The cold tire pressure is shown on the Tire and Loading Information label affixed to the pillar as illustrated.

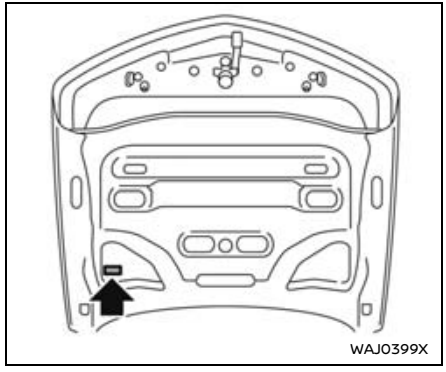

AIR CONDITIONER SPECIFICATION LABEL

The air conditioner specification label is attached as shown.

Air conditioner specification label symbols:		
Symbol Name	Reference	Graphic
Caution	ISO 7000 0434	
Air Conditioning System (MAC)	ISO 2575 D01	
MAC System Lubricant Type (PAG–POE)		
Requires Registered Technician to Service MAC System		
Flammable Refrigerant		

INSTALLING FRONT LICENSE PLATE

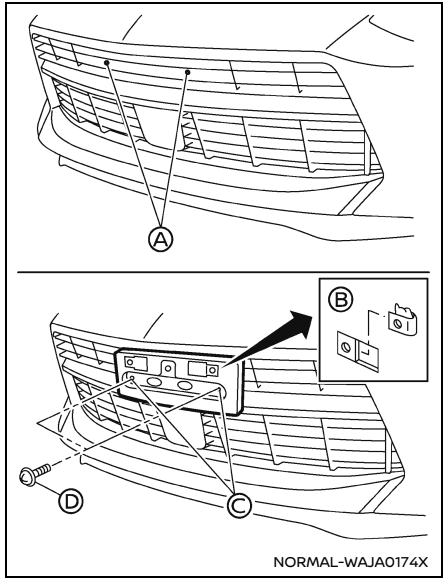

EXCEPT FOR NISMO MODELS

Use the following steps to mount the license plate.

Only use the recommended mounting position, otherwise the radar sensor (Intelligent Cruise Control (ICC) system) obstruction may result.

Before mounting the license plate, confirm that the following parts are enclosed in the plastic bag.

- License plate bracket
- J-nut × 2
- Screw × 2

1. Park the vehicle on flat, level ground.
2. Locate the two dimples Ⓐ in the front grille.
3. Insert J-nuts Ⓑ into the license plate bracket.
4. Insert the bosses of the license plate bracket into the front grille, aligning the holes Ⓒ with the location marks (two dimples) Ⓐ.
5. Install the license plate bracket with the screws Ⓓ provided.
6. Install the license plate with bolts that are no longer than 0.55 in (14 mm).

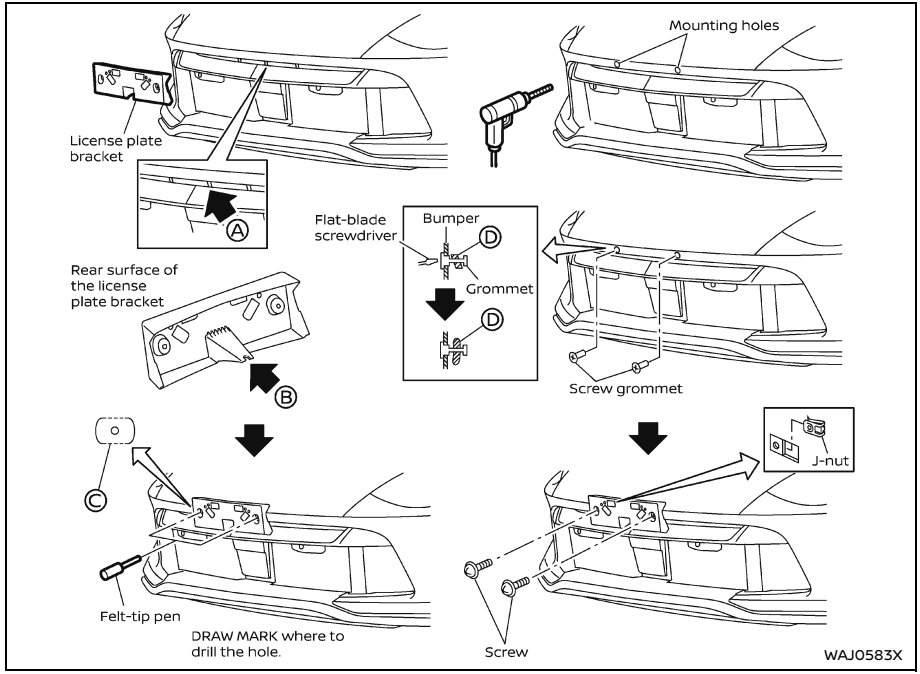

FOR NISMO MODELS

Use the following steps to mount the license plate:

Before mounting the license plate, confirm that the following parts are enclosed in the plastic bag.

- License plate bracket

- J-nut × 2
- Screw × 2
- Screw grommet × 2

1. Temporarily place the license plate bracket while aligning points Ⓐ of the front grille with part Ⓑ of the rear surface of the license plate bracket.
2. Mark the center of the hole Ⓒ with a felt-tip pen.
3. Carefully drill two pilot holes using a 0.39 in (10 mm) drill bit at the marked locations. **(Be sure that the drill only goes through the fascia.)**
4. Insert grommets into the hole on the fascia.
5. Insert a flat-blade screwdriver into the grommet hole to add a 90° turn onto the part Ⓓ.
6. Insert a J-nut into the license plate bracket before placing the license plate bracket on the fascia.
7. Install the license plate bracket with screws.
8. Install the license plate with bolts that are no longer than 0.55 in (14 mm).

REMOVING AIR DEFLECTORS

This vehicle is equipped with air deflectors in front of the front/rear wheels. The deflectors will change the air flow to help improve aerodynamic performance.

When transporting your vehicle on a trailer, the air deflectors may interfere with a steep slope to a trailer bed. In this case, remove the deflectors from the undercover of the vehicle.

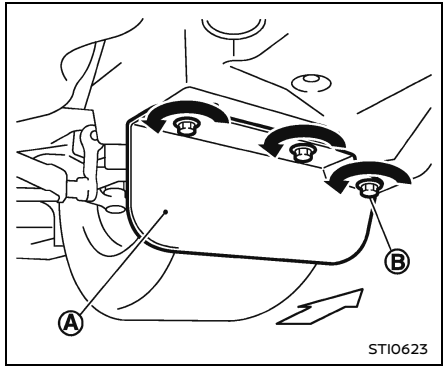

Left side

Front (if so equipped):

1. Loosen three screws as shown and remove the left-side air deflector Ⓐ.
2. Tighten the removed screw Ⓑ in its original position.
3. Perform the same procedure to remove the right-side air deflector.
4. Store the two air deflectors and four screws to reinstall in the reverse order.
5. When reinstalling, make sure all six screws are firmly tightened on both air deflectors.

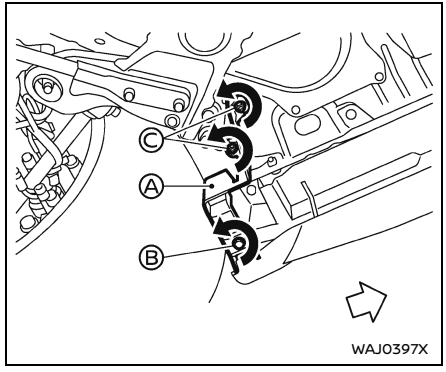

Left side

Rear:

1. Loosen screw and nuts as shown and remove the left-side air deflector Ⓐ.
2. Tighten the removed screw Ⓑ and nuts Ⓒ in its original position.
3. Perform the same procedure to remove the right-side air deflector.
4. Store the two air deflectors and four nuts to reinstall in the reverse order.
5. When reinstalling, make sure all screws and nuts are firmly tightened on both air deflectors.

BASIC INFORMATION

⚠ WARNING

- **It is extremely dangerous to ride in a cargo area inside the vehicle. In a collision, people riding in these areas are more likely to be seriously injured or killed.**
- **Do not allow people to ride in any area of vehicle that is not equipped with seats and seat belts. In a collision, people riding in these areas are more likely to be seriously injured or killed.**
- **To minimize the risk of severe injury or death in the event of crash be sure everyone in your vehicle is in a seat and using a seat belt properly.**

TERMS

It is important to familiarize yourself with the following terms before loading your vehicle:

- Curb Weight (actual weight of your vehicle) - vehicle weight including: standard equipment, fluids and emergency tools. This weight **does not** include passengers and cargo.
- GVW (Gross Vehicle Weight) - curb weight plus the combined weight of optional equipment, passengers and cargo.
- GVWR (Gross Vehicle Weight Rating) - maximum total combined weight of the unloaded vehicle, passengers, luggage, hitch, trailer tongue load and any other optional equipment. This information is located on the F.M.V.S.S./C.M.V.S.S. label.
- GAWR (Gross Axle Weight Rating) - maximum weight (load) limit specified for the front or rear axle. This information is located on the F.M.V.S.S./C.M.V.S.S. label.
- GCWR (Gross Combined Weight Rating) - The maximum total

weight rating of the vehicle, passengers, cargo, and trailer.

- Vehicle Capacity Weight, Load limit, Total load capacity - maximum total weight limit specified of the load (passengers and cargo) for the vehicle. This is the maximum combined weight of occupants and cargo that can be loaded into the vehicle. If the vehicle is used to tow a trailer, the trailer tongue weight must be included as part of the cargo load. This information is located on the Tire and Loading Information label.
- Cargo capacity - permissible weight of cargo, the weight of total occupants weight subtracted from the load limit.

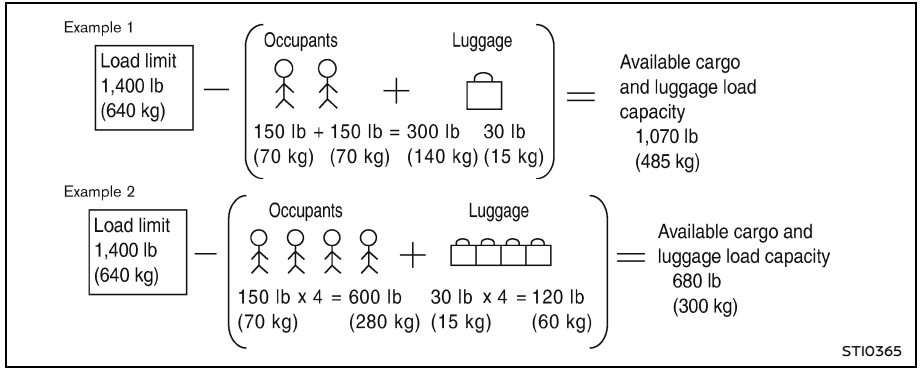

VEHICLE LOAD CAPACITY

Basic information

Do not exceed the load limit of your vehicle shown as “The combined weight of occupants and cargo” on the Tire and Loading Information label. Do not exceed the number of occupants shown as “Seating Capacity” on the Tire and Loading Information label.

To get “the combined weight of occupants and cargo”, add the weight of all occupants, then add the total luggage weight. Examples are shown in the illustration.

Steps For Determining Correct Load Limit

1. Locate the statement “The combined weight of occupants and cargo should never exceed XXX kg or XXX lbs.” on your vehicle’s placard.
2. Determine the combined weight of the driver and passengers that will be riding in your vehicle.

3. Subtract the combined weight of the driver and passengers from XXX kg or XXX lbs.
4. The resulting figure equals the available amount of cargo and luggage load capacity. For example, if the "XXX" amount equals 1400 lbs. and there will be five 150 lb passengers in your vehicle, the amount of available cargo and luggage load capacity is 650 lbs. (1400 − 750 (5 x 150) = 650 lbs.)
5. Determine the combined weight of luggage and cargo being loaded on the vehicle. That weight may not safely exceed the available cargo and luggage load capacity calculated in Step 4.
6. If your vehicle will be towing a trailer, load from your trailer will be transferred to your vehicle. Consult this manual to determine how this reduces the available cargo and luggage load capacity of your vehicle.

Towing a trailer with a vehicle that is not intended for towing may result in an accident involving injury or death.

⚠ WARNING

- **Do not tow a trailer with your vehicle. Towing a trailer may result in an accident involving injury or death.**

Before driving a loaded vehicle, confirm that you do not exceed the Gross Vehicle Weight Rating (GVWR) or the Gross Axle Weight Rating (GAWR) for your vehicle. (See "Measurement of weights" (P.406).)

Also check tires for proper inflation pressures. See the Tire and Loading Information label.

LOADING TIPS

- The GVW must not exceed GVWR or GAWR as specified on the F.M.V.S.S./C.M.V.S.S. certification label.
- Do not load the front and rear axle to the GAWR. Doing so will exceed the GVWR.

⚠ WARNING

- **Properly secure all cargo to help prevent it from sliding or shifting. Do not place cargo higher than the seatbacks. In a sudden stop or collision, unsecured cargo could cause personal injury.**
- **Do not load your vehicle any heavier than the GVWR or the maximum front and rear GAWRs. If you do, parts of your vehicle can break, tire damage could occur, or it can change the way your vehicle handles. This could result in loss of control and cause personal injury.**

- **Overloading could not only shorten the life of your vehicle and the tires, but also could lead to hazardous vehicle handling and long braking distance. This may cause a premature tire malfunction, which could result in a serious accident and personal injury. Failures caused by overloading are not covered by the vehicle's warranty.**

MEASUREMENT OF WEIGHTS

Secure loose items to prevent weight shifts that could affect the balance of your vehicle. When the vehicle is loaded, drive to a scale and weigh the front and the rear wheels separately to determine axle loads. Individual axle loads should not exceed either of the Gross Axle Weight Ratings (GAWR). The total of the axle loads should not exceed the Gross Vehicle Weight Rating (GVWR). These ratings are given on the vehicle certification label. If weight ratings are exceeded, move or remove items to bring all weights below the ratings.

TOWING A TRAILER

Do not tow a trailer with your vehicle.

FLAT TOWING

Basic information

Towing your vehicle with all four wheels on the ground is sometimes called flat towing, dinghy towing or 4 down towing. This method is sometimes used when towing a vehicle behind a recreational vehicle, such as a motor home.

⚠ CAUTION

- **Failure to follow these guidelines can result in severe transmission damage.**
- **Whenever flat towing your vehicle, always tow forward, never backward.**
- **DO NOT tow any automatic transmission vehicle with all four wheels on the ground (flat towing). Doing so WILL DAMAGE internal transmission parts due to lack of transmission lubrication.**
- **For emergency towing procedures refer to "Towing your vehicle" (P.312) of this manual.**

Automatic transmission

To tow a vehicle equipped with an automatic transmission, an appropriate vehicle dolly **MUST** be placed under the towed vehicle's drive wheels. **Always** follow the dolly manufacturer's recommendations when using their product.

NOTE:
If the battery is completely drained the transmission will not manually shift to other positions.

Manual transmission

- Always tow with the manual transmission in Neutral.
- Your vehicle speed should never exceed 70 MPH (112 km/h) when flat towing your vehicle.
- After towing 500 miles, start and idle the engine with the transmission in Neutral for two minutes. Failure to idle the engine after every 500 miles of towing may cause damage to the transmission's internal parts.

DOT (Department Of Transportation) Quality Grades: All passenger car tires must conform to federal safety requirements in addition to these grades.

Quality grades can be found where applicable on the tire sidewall between tread shoulder and maximum section width. For example:

Treadwear 200 Traction AA Temperature A

Treadwear

The treadwear grade is a comparative rating based on the wear rate of the tire when tested under controlled conditions on a specified government test course. For example, a tire graded 150 would wear one and one-half (1 1/2) times as well on the government course as a tire graded 100. The relative performance of tires depends upon actual conditions of their use, however, and may depart significantly from the norm due to variations in driving habits, service practices and differences in road characteristics and climate.

Traction AA, A, B and C

The traction grades, from highest to lowest, are AA, A, B and C. Those grades represent the tire's ability to stop on wet pavement as measured under controlled conditions on specified government test

surfaces of asphalt and concrete. A tire marked C may have poor traction performance.

⚠ WARNING

The traction grade assigned to this tire is based on straight-ahead braking traction tests, and does not include acceleration, cornering, hydroplaning, or peak traction characteristics.

Temperature A, B and C

The temperature grades A (the highest), B, and C, representing the tire's resistance to the generation of heat and its ability to dissipate heat when tested under controlled conditions on a specified indoor laboratory test wheel. Sustained high temperature can cause the material of the tire to degenerate and reduce tire life, and excessive temperature can lead to sudden tire failure. The grade C corresponds to a level of performance which all passenger car tires must meet under the Federal Motor Vehicle Safety Standard No. 109. Grades B and A represent higher levels of performance on the laboratory test wheel than the minimum required by law.

⚠ WARNING

The temperature grade for this tire is established for a tire that is properly inflated and not overloaded. Excessive speed, under-inflation, or excessive loading, either separately or in combination, can cause heat build-up and possible tire failure.

REPORTING SAFETY DEFECTS

For USA

If you believe that your vehicle has a defect which could cause a crash or could cause injury or death, you should immediately inform the National Highway Traffic Safety Administration (NHTSA) in addition to notifying NISSAN.

If NHTSA receives similar complaints, it may open an investigation, and if it finds that a safety defect exists in a group of vehicles, it may order a recall and remedy campaign. However, NHTSA cannot become involved in individual problems between you, your dealer, or NISSAN.

To contact NHTSA, you may call the Vehicle Safety Hotline toll-free at 1-888-327-4236 (TTY: 1-888-275-9171); go to http://www.safercar.gov; or write to: Administrator, NHTSA, 1200 New Jersey Avenue, SE Washington, D.C. 20590. You can also obtain other information about motor vehicle safety from http://www.safercar.gov.

You may notify NISSAN by contacting our Consumer Affairs Department, toll-free, at 1-800-NISSAN-1.

For Canada

If you believe that your vehicle has a defect which could cause a crash or could cause injury or death, you should immediately inform Transport Canada in addition to notifying NISSAN.

If Transport Canada receives complaints, it may open an investigation, and if it finds that a safety defect exists in a group of vehicles, it may request that NISSAN conduct a recall campaign. However, Transport Canada cannot become involved in individual problems between you, your dealer, or NISSAN.

You may contact Transport Canada's Defect Investigations and Recalls Division toll free at 1-800-333-0510. You may also report safety defects online at:

http://www.tc.gc.ca/eng/motorvehiclesafety/menu.htm (English speakers) or http://www.tc.gc.ca/fra/securiteautomobile/menu.htm (French speakers) Or contact Transport Canada by mail at: Transport Canada Motor Vehicle Safety Investigations Laboratory 80 Noel Street Gatineau, QC J8Z0A1

Additional information concerning motor vehicle safety may be obtained from Transport Canada's Road Safety Information Centre at 1-800-333-0371 or online at www.tc.gc.ca/roadsafety (English speakers) or www.tc.gc.ca/securiteroutiere (French speakers).

To notify NISSAN of any safety concerns please contact our Consumer Information Centre toll free at 1-800-387-0122.

READINESS FOR INSPECTION/MAINTENANCE (I/M) TEST

Due to legal requirements in some states and Canadian Provinces, your vehicle may be required to be in what is called the "ready condition" for an Inspection/Maintenance (I/M) test of the emission control system.

The vehicle is set to the "ready condition" when it is driven through certain driving patterns. Usually, the "ready condition" can be obtained by ordinary usage of the vehicle.

If a powertrain system component is repaired or the battery is disconnected, the vehicle may be reset to a "not ready condition". Before taking the I/M test, check the vehicle's inspection/maintenance test readiness condition. Place the ignition switch in the ON position without starting the engine. If the Malfunction Indicator Light (MIL) comes on steady for 20 seconds and then blinks for 10 seconds, the I/M test condition is "not ready". If the MIL does not blink after 20 seconds, the I/M test condition is "ready".

It is recommended you visit a NISSAN dealer to set the "ready condition" or to prepare the vehicle for testing.

EMISSION CONTROL SYSTEM WARRANTY

Your NISSAN is covered by the following emission warranties.

For USA:

- Emission Defects Warranty
- Emissions Performance Warranty

Details of this warranty may be found with the other vehicle warranties in your Electronic Warranty Information Booklet which can be accessed at https://www.nissanusa.com/owners/manuals-guides.html. A printed copy of the Warranty Information Booklet may be obtained by writing to:

- Nissan North America, Inc.
  Consumer Affairs Department
  P.O. Box 685003
  Franklin, TN 37068-5003
  1–800–NISSAN-1

For Canada:

Details of this warranty may be found with other vehicle warranties in your Warranty Information Booklet. The Warranty Information Booklet can be found at https://www.nissan.ca/owners/warranties-and-coverage/limited-warranty.html.

EVENT DATA RECORDERS (EDR)

This vehicle is equipped with an Event Data Recorder (EDR). The main purpose of an EDR is to record, in certain crash or near crash-like situations, such as an air bag deployment or hitting a road obstacle, data that will assist in understanding how a vehicle's systems performed. The EDR is designed to record data related to vehicle dynamics and safety systems for a short period of time, typically 30 seconds or less. The EDR in this vehicle is designed to record such data as:

- How various systems in your vehicle were operating;
- Whether or not the driver and passenger safety belts were buckled/fastened;
- How far (if at all) the driver was depressing the accelerator and/or brake pedal; and,
- How fast the vehicle was traveling.
- Sounds are not recorded.

These data can help provide a better understanding of the circumstances in which crashes and injuries occur. NOTE: EDR data are recorded by your vehicle only if a nontrivial crash situation occurs; no data are recorded by the EDR under normal driving conditions and no personal data (e.g. name, gender, age and crash location) are recorded. However, other parties, such as law enforcement, could combine the EDR data with the type of personally identifying data routinely acquired during a crash investigation.

To read data recorded by an EDR, special equipment is required, and access to the vehicle or the EDR is needed. In addition to the vehicle manufacturer and NISSAN dealer, other parties, such as law enforcement, that have the special equipment, can read the information if they have access to the vehicle or the EDR. EDR data will only be accessed with the consent of the vehicle owner or lessee or as otherwise required or permitted by law.

OWNER'S MANUAL/SERVICE MANUAL ORDER INFORMATION

Genuine NISSAN Service Manuals for this model year and prior can be purchased. A genuine NISSAN Service Manual is the best source of service and repair information for your vehicle. This manual is the same one used by the factory trained technicians working at a NISSAN dealer. Genuine NISSAN Owner's Manuals can also be purchased.

For USA:

For current pricing and availability of genuine **NISSAN Service Manuals**, contact:

www.nissan-techinfo.com

For current pricing and availability of genuine **NISSAN Owner's Manuals**, visit:

https://www.nissanusa.com

For Canada:

To purchase a copy of a genuine NISSAN Service Manual or Owner's Manual for this model year and prior please contact your nearest NISSAN dealer. For the phone number and location of a NISSAN dealer in your area, call the NISSAN Information Center at 1-800-387-0122 and a bilingual NISSAN representative will assist you.

MEMO

11 Index

A

ABS (Anti-lock Braking System) 290
Active noise cancellation 296
Active sound enhancement 296
Advanced air bag system 50
Air bag system
  Advanced air bag system 50
  Front passenger air bag and status light 51
  Front-seat mounted side-impact supplemental air bag system 55
  Roof-mounted curtain side-impact supplemental air bag system 55
Air bag warning labels 61
Air bag warning light 61, 81
Air cleaner housing filter 343
Air conditioner
  Air conditioner operation 180
  Air conditioner service 183
  Air conditioner specification label 399
  Air conditioning system refrigerant and oil recommendations 183, 393
  In-cabin microfilter 183
Air deflectors 402
Alarm, How to stop alarm (see vehicle security system) 108
Alcohol, drugs and driving 196
Android Auto 170
Antenna 184
Anti-lock Braking System (ABS) 290
Anti-lock braking system (ABS) warning light 82
Appearance care
  Exterior appearance care 318
  Interior appearance care 321
Apple CarPlay® 170
Audible reminders 86
Autolight system 112
Automatic
  Air conditioner 181
  Automatic adjusting function (front windows) 134
  Automatic Transmission Fluid (ATF) 337
  Door locks 147
  Driving with automatic transmission 202
Automatic Emergency Braking (AEB) system OFF warning light 82
Automatic Emergency Braking (AEB) with Pedestrian Detection system 250
Automatic engine shut off 199
Average fuel consumption 103
Average speed 103
Avoiding collision and rollover 195

B

Battery
  Battery 339
  Battery saver system 117
  Intelligent Key 348
Before starting the engine 200
Belts (See drive belts) 342
Blind Spot Warning (BSW) 221
Booster seats 41
Boostmeter 78
Brake
  Anti-lock Braking System (ABS) 290
  Brake and clutch fluid 337
  Brake fluid 338
  Brake system 289
  Parking brake operation 214
  Warning light 79
Break-in schedule 284
Bulb replacement 351

C

Cabin air filter 183
Capacities and recommended fluids/lubricants 387
Car phone or CB radio 185
Catalytic converter, Three way catalyst 190
Changing intercooler coolant 334
Charger
  USB (Universal Serial Bus) charging connector 124
Checking intercooler coolant level 334
Child restraints
  Booster seats 41
  Child restraints 34
  Precautions on child restraints 34
  Top tether strap 35
Child safety 31
Chimes
  Audible reminders 86
  Seat belt warning light and chime 27, 81
Circuit breaker, Fusible link 347
Cleaning exterior and interior 318, 321
Clock 106
Clutch fluid 337
Cockpit 69
Cold weather driving 293
Console box 130

Coolant
Capacities and recommended fluids/lubricants 387
Changing engine coolant 333
Checking engine coolant level 332
Corrosion protection 325
Cruise control
Fixed speed cruise control (on ICC system) 246
Intelligent Cruise Control (ICC) 230
Cup holders 128

D

Daytime running light system 117
Defroster switch, Rear window defroster switch 111
Dimensions 396
Display
Vehicle information display 87
Drive belts 342
Drive Computer 103
Drive Mode Selector 215
Driving
Cold weather driving 293
Drive Mode Selector 215
Driving with automatic transmission 202
Driving with manual transmission 207
Precautions when starting and driving 190

E

Easy-Fill Tire Alert system 194
Economy, Fuel 285
Elapsed time 103
Electric power steering warning light 82
Electric shift control system warning light 80
Emergency Call (SOS) button 127
Emergency tire puncture repair kit 300
Emission control information label 398
Emission control system warranty 410
Engine
Before starting the engine 200
Break-in schedule 284
Capacities and recommended fluids/lubricants 387
Changing engine coolant 333
Changing engine oil and filter 335
Checking engine coolant level 332
Checking engine oil level 335
Coolant temperature gauge 75
Emergency engine shut off 199
Engine block heater 295
Engine compartment check locations 330
Engine cooling system 331
Engine oil 335
Engine oil and oil filter recommendation 392
Engine oil viscosity 392
Engine serial number 398
Engine specifications 394
Engine start operation indicator 94
Engine start operation indicator (Manual Transmission models) 94
If your vehicle overheats 311
Starting the engine 201
Event Data Recorders (EDR) 410
Exhaust gas (carbon monoxide) 190
Explanation of scheduled maintenance items 369
Exterior light indicator 86

F

F.M.V.S.S./C.M.V.S.S. certification label 398
Filter
Air cleaner housing filter 343
Changing engine oil and filter 335
Flashers (See hazard warning flasher switch) 298
Flat tire
Flat tire 299
Repairing flat tire 300
Flat towing 407
Floor mat cleaning 323
Floor mat installation 323
Fluid
Automatic Transmission Fluid (ATF) 337
Brake and clutch fluid 337
Brake fluid 338
Capacities and recommended fluids/lubricants 387
Engine coolant 331
Engine oil 335
Window washer fluid 339
Fog light switch 120
Front and rear sonar system 280
Front manual seat adjustment 19
Front passenger air bag and status light 51
Front power seat adjustment 17
Front seat, Front seat adjustment 17
Front-seat active head restraints 24
Fuel
Capacities and recommended fluids/lubricants 387
Fuel economy 285
Fuel information 389
Fuel octane rating 389

Fuel-filler cap 161
Fuel-filler door 161
Gauge 76
Loose Fuel Cap warning 163
Fuel efficient driving tips 284
Fuses 346
Fusible links 347

G

Garage door opener, HomeLink® Universal Transceiver 136
Gas cap 161
Gauge
Engine coolant temperature gauge 75
Fuel gauge 76
Gauge 71
Odometer 73
Speedometer 73
Tachometer 75
General maintenance 366
Glove box 129

H

Hatch, Rear hatch 157
Hazard warning flasher switch 298
Head restraints/headrests 21
Headlights
Bulb replacement 351
Headlight switch 112
Heated seats 121
Heater
Engine block heater 295
Heater and air conditioner operation 180
High beam assist 114
Hill start assist system 279
HomeLink® Universal Transceiver 136
Hood release 157
Horn 120
How to use launch control function 212

I

Ignition switch
(Push-button) 197
Manual transmission models 207
Immobilizer system 109
In-cabin microfilter 183
Indicator
Lights 82
Vehicle information display 87
Inside mirror 165
Inspection/maintenance (I/M) test 409
Instrument brightness control 118
Instrument panel 70
Intelligent Cruise Control (ICC) 230
Intelligent Driver Alertness (I-DA) 277
Intelligent Forward Collision Warning (I-FCW) 268
Intelligent Key 144
Intelligent Key button operation light 155
Intelligent Key system
Battery replacement 348
Intelligent Key system 148
Key operating range 149
Key operation 151
Warning signals 152
Intercooler cooling system 333
Interior light control switch 135
Interior light replacement 351
Interior lights 134

J

Jump starting 309

K

Keyless entry (See remote keyless entry system) 153
Keys 144
For Intelligent Key system 148

L

Labels
Air bag warning labels 61
Air conditioner specification label 399
Emission control information label 398
Engine serial number 398
F.M.V.S.S./C.M.V.S.S. certification label 398
Tire and Loading information label 354, 399
Vehicle identification number (VIN) 397
Lane Departure Warning (LDW) 216
Launch Control 212
License plate, Installing front license plate 400
Light
Air bag warning light 61
Bulb replacement 351
Cargo light 136
Fog light switch 120
Headlight switch 112
Headlights bulb replacement 351
Indicator lights 82
Interior light control switch 135
Interior lights 134
Map lights 134

Replacement 351
Vanity mirror lights 136
Warning lights, indicator lights and audible reminders 79
Lights check/instrument panel 78
Lights, Exterior and interior light replacement 351
Limited Slip Differential 286
Loading information (See vehicle loading information) 403
Lock
Automatic door locks 147
Door locks 146
Power door lock 146
Rear hatch lock 157
Locking with mechanical key 146
Low tire pressure warning (Tire Pressure Low) 95
Low tire pressure warning light 83
Low tire pressure warning system (See Tire Pressure Monitoring System (TPMS)) 191

M

Maintenance
Battery 339
General maintenance 366
Inside the vehicle 367
Maintenance precautions 329
Maintenance requirements 366
Maintenance schedules 370
Outside the vehicle 366
Seat belt maintenance 31
Standard maintenance 372
Under the hood and vehicle 368
Maintenance schedules 370
Malfunction indicator light (MIL) 84
Manual front seat adjustment 19
Map lights 134
Master warning light 80, 85
Mechanical key (Intelligent Key system) 145
Meters and gauges
Instrument brightness control 118
Meters and gauges 71
Mirror
Inside mirror 165
Outside mirrors 166
Vanity mirror 167

N

Neutral hold mode 205
New vehicle break-in 284
NISSAN Vehicle Immobilizer System 109

O

Odometer 73
Off-road recovery 195
Oil
Capacities and recommended fluids/lubricants 387
Changing engine oil and filter 335
Checking engine oil level 335
Engine oil 335
Engine oil viscosity 392
Oil control system 91
Outside air temperature 106
Outside mirrors 166
Overheat, If your vehicle overheats 311
Owner's Manual/Service Manual order information 411

P

Panic alarm 155
Parking
Brake break-in 289
Parking brake operation 214
Parking on hills 287
Phone
Car phone or CB radio 185
Pop-up engine hood 62
Power
Electric power steering 288
Front seat adjustment 17
Power door lock 146
Power outlet 123
Power windows 132
Precautions
Braking precautions 289
Child restraints 34
Maintenance 329
Seat belt usage 24
Supplemental restraint system 44
When starting and driving 190
Push starting 311
Push-button ignition switch 197

R

Radio
Car phone or CB radio 185
Rapid air pressure loss 196
Readiness for inspection/maintenance (I/M) test 409
Rear Cross Traffic Alert (RCTA) 261
Rear hatch 157
Rear hatch hooks 131
Rear hatch opener 157

Rear hatch opener switch 158
Rear hatch release switch 159
Rear parcel box 130
Rear window defroster switch 111
RearView Monitor 172
Recorders, Event data 410
Registering your vehicle in another country 397
Remote keyless entry system 153
Repairing flat tire 300
Reporting safety defects 408
Roadside assistance program 298
Rollover 195

S

Safety
  Reporting safety defects 408
Safety, Child seat belts 31
Seat adjustment
  Front manual seat adjustment 19
  Front power seat adjustment 17
  Front seats 17
Seat belt(s)
  Child safety 31
  Infants 32
  Injured persons 28
  Larger children 32
  Precautions on seat belt usage 24
  Pregnant women 28
  Seat belt cleaning 324
  Seat belt extenders 30
  Seat belt maintenance 31
  Seat belt warning light and chime 27, 81
  Seat belts 24
  Seat belts with pretensioners 57
  Three-point type 28
Seat(s)
  Heated seats 121
  Seats 16
Secondary rear hatch release 159
Security system (NISSAN Vehicle Immobilizer System), Engine start 109
Security system, Vehicle security system 107
Servicing air conditioner 183
Shifting
  Automatic transmission 202
  Manual transmission 207
Sonar system
  Front and rear sonar system 280
Sonar system settings 282
SOS button (See Emergency Call (SOS) button) 127
Spare tire 395
Spark plugs 342
Speedometer 73
Standard maintenance 372
Starting
  Before starting the engine 200
  Jump starting 309
  Precautions when starting and driving 190
  Push starting 311
  Starting the engine 201
Status light, Front passenger air bag 51
Steering
  Electric power steering 288
Steering wheel 164
Storage 128
Sun visors 164
Supplemental air bag warning labels 61
Supplemental air bag warning light 61, 81
Supplemental restraint system
  Precautions on supplemental restraint system 44
  Supplemental restraint system 44
Switch
  Autolight switch 112
  Drive Mode Selector 215
  Emergency Call (SOS) button 127
  Fog light switch 120
  Hazard warning flasher switch 298
  Headlight switch 112
  Ignition switch 202
  Ignition switch manual transmission models 207
  Power door lock switch 147
  Rear hatch release switch 159
  Rear window defroster switch 111
  Turn signal switch 119
  Vehicle dynamic control (VDC) off switch 122
SynchroRev Match mode (S-MODE) 208

T

Tachometer 75
Temperature gauge, Engine coolant temperature gauge 75
Theft (NISSAN Vehicle Immobilizer System), Engine start 109
Three-way catalyst 190
Tire
  Pressure, Low tire pressure warning light 83
  Sealant 300
Tires
  Easy-Fill Tire Alert system 194

Emergency tire puncture repair kit 300
Flat tire 299
Low tire pressure warning system 191
Tire and Loading information label 354, 399
Tire chains 359
Tire dressing 321
Tire pressure 353
Tire Pressure Monitoring System (TPMS) 191, 299
Tire rotation 360
Types of tires 359
Uniform tire quality grading 407
Wheel/tire size 395
Wheels and tires 353
Towing
Flat towing 407
Tow truck towing 312
Towing a trailer 406
TPMS, Tire Pressure Monitoring System
TPMS with Easy Fill Tire Alert 194
TPMS, Tire Pressure Monitoring System 191, 299
Trailer towing 406
Transceiver, HomeLink® Universal Transceiver 136
Transmission
Automatic Transmission Fluid (ATF) 337
Driving with automatic transmission 202
Driving with manual transmission 207
Transmitter (See remote keyless entry system) 153
Traveling or registering your vehicle in another country 397
Trip computer 102
Trip odometer 103
Triple meter 78
Turbo Speedometer 78
Turbocharger system 191
Turn signal switch 119

U

Underbody cleaning 320
Uniform tire quality grading 407
Upshift indicator 211
USB (Universal Serial Bus) charging connector 124

V

Vanity mirror 167
Vanity mirror lights 136
Vehicle
Dimensions 396
Identification number (VIN) 397
Loading information 403
Recovery (freeing a stuck vehicle) 315
Security system 107
Vehicle dynamic control (VDC) off switch 122
Vehicle dynamic control (VDC) system 291
Vehicle information display 87
Settings 88
Vehicle information display warnings and indicators 94
Ventilators 179
Voltmeter 78

W

Warning
Blind Spot Warning (BSW) 221
Hazard warning flasher switch 298
Intelligent Forward Collision Warning (I-FCW) 268
Lane Departure Warning (LDW) 216
Lights 79
Low tire pressure warning 95
Tire Pressure Monitoring System (TPMS) 191, 299
Vehicle information display 87
Warning lights, indicator lights and audible reminders 78
Warning labels, Air bag warning labels 61
Warning light
Air bag warning light 61, 81
Anti-lock braking system (ABS) warning light 82
Brake warning light 79
Electric power steering warning light 82
Electric shift control system warning light 80
Low tire pressure warning light 83
Seat belt warning light and chime 27, 81
Warranty, Emission control system warranty 410
Washer switch, Wiper and washer switch 110
Washing 318
Waxing 319
Wheel/tire size 395
Wheels and tires
Care of wheels 320
Cleaning aluminum alloy wheels 320
Wheels and tires 353
Window washer fluid 339
Window(s)
Automatic adjusting function 134
Cleaning 320

Power windows 132
Wiper
Wiper and washer switch 110
Wiper blades 344
Wiper and washer switch 110

MEMO

MEMO

MEMO

MEMO

MEMO

MEMO

MEMO

QR code (U.S. only) **QR code (Canada only)**

To view the digital manuals and other useful guides related to your vehicle, go to **www.nissanquickguide.com** for US or **www.nissan.ca** for Canada or snap this QR code with an appropriate QR code reader.

QR code (U.S. only) **QR code (Canada only)**

For vehicles equipped with remote connectivity, including an SOS button, scan to download the smartphone app.

Printing : 2026-09
Publication No.: OM27E0 0Z34U1
Printed in the U.S.A.

Z34-D