2027 NISSAN ROGUE Hybrid e-POWER

Emergency Response Guide

INFORMATION FOR FIRST AND SECOND RESPONDERS



NISSAN ROGUE
Hybrid e-POWER (2027 -)

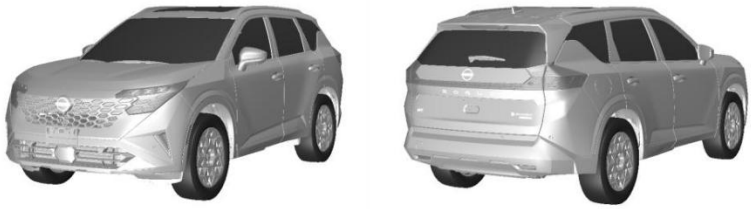

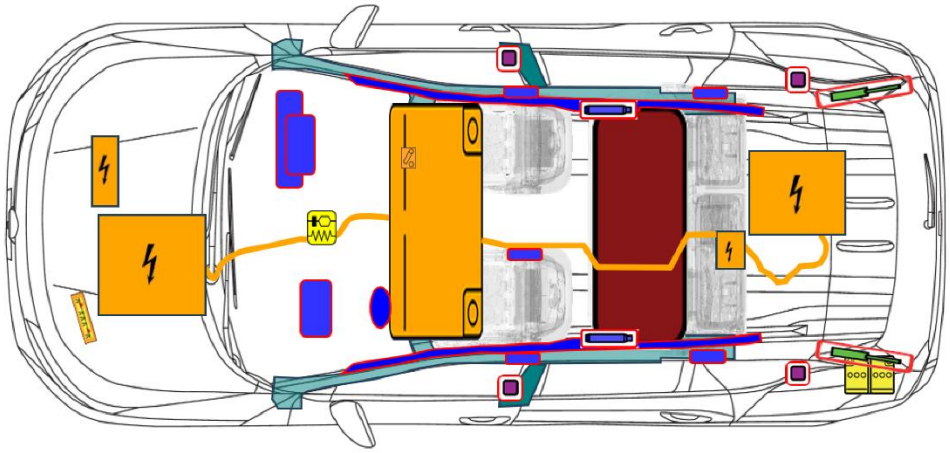

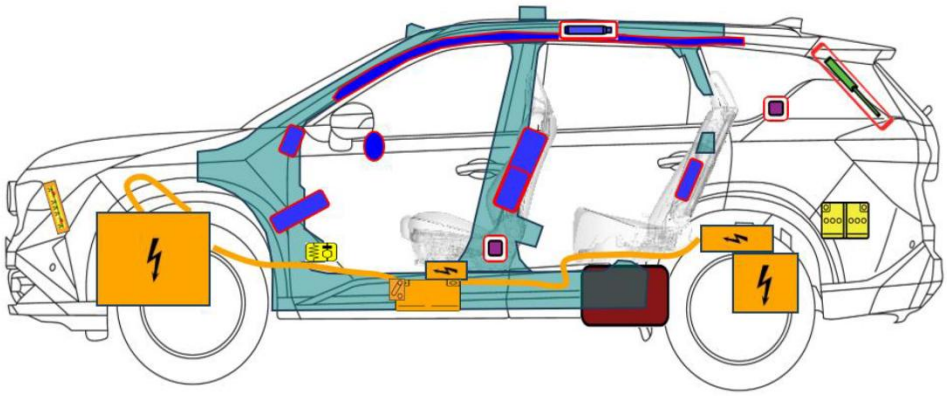

	Air bag		Stored gas inflator		Seat belt with Pretensioners		SRS control unit		Gas strut / Preloaded spring
	High strength Zone		Battery low voltage		High voltage battery pack		High voltage power cable		High voltage disconnect
	High voltage power component		Cable cut		Fuel tank				

Foreword

This manual describes emergency response operations and **important safety** related warnings for this vehicle.

This vehicle is an electrically driven car equipped with a high-voltage battery pack. **Failure to follow recommended practices during emergency responses will cause death or serious personal injury.**

Please read this manual in advance in order to understand the features of this vehicle and to help you deal with incidents involving this vehicle. Follow the procedures in order to help assure a safe and successful first response operation.

IMPORTANT INFORMATION ABOUT THIS MANUAL

You may see various symbols in this manual. They have the following meanings:



⚠DANGER

This symbol is used to inform you of an operation which will result in death or serious personal injury if instructions are not followed.

Example: Touching high-voltage components without using the appropriate protective equipment will result in electrocution.

⚠WARNING

This symbol is used to inform you of an operation which may cause death or serious personal injury if instructions are not followed.

⚠CAUTION

This symbol is used to inform you of an operation which may cause personal injury or component damage if instructions are not followed.

Table of Contents

EMERGENCY RESPONSE SHEET ERG–2

1. IDENTIFICATION / RECOGNITION ERG–5

2. IMMOBILIZATION / STABILIZATION / LIFTING ERG–14

3. DISABLE DIRECT HAZARDS / SAFETY REGULATIONS ERG–18

4. ACCESS TO THE OCCUPANTS ERG–28

5. STORED ENERGY / LIQUIDS / GASES / SOLIDS ERG–37

6. IN CASE OF FIRE ERG–39

7. IN CASE OF SUBMERSION ERG–41

8. TOWING / TRANSPORTATION / STORAGE ERG–42

9. IMPORTANT ADDITIONAL INFORMATION ERG–81

10. EXPLANATION OF PICTOGRAMS USED ERG–82

1. Identification / Recognition

1-1 About The NISSAN ROGUE Hybrid e-POWER

This vehicle uses two types of batteries. One is a 12V battery that is the same as the battery in vehicles powered by internal combustion engines, and the other is the high voltage (Li-ion) battery for the traction motor which propels the vehicle. The high-voltage battery is encased in a steel case and is mounted transversely under the driver and front passenger seats.

The high-voltage battery is charged by the internal combustion engine, which functions like a generator but doe not propel the vehicle. In addition, the high-voltage battery can be recharged by converting driving force into electricity while the vehicle is decelerating or being driven downhill. This is called regenerative charging.

1-1.1 Exterior

The specific exterior identification features are indicated as follows:

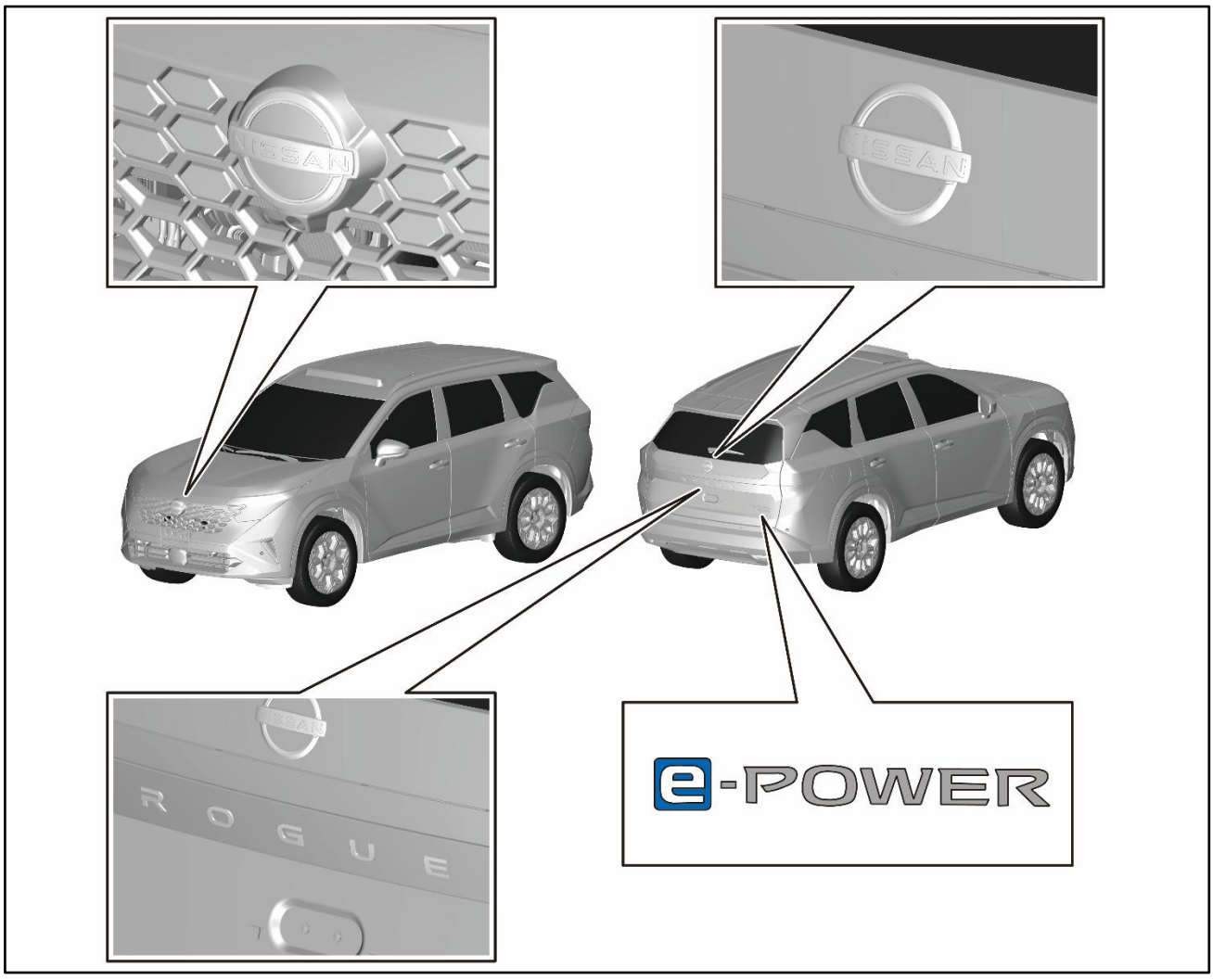

On Hybrid e-POWER vehicles, orange high-voltage cables can be seen at the dotted-line locations in the engine compartment. In addition, a label like the one shown in the callout is attached at the front of the engine compartment.



1-1.2 Interior Component Location

Interior components referenced in this manual are as follows:

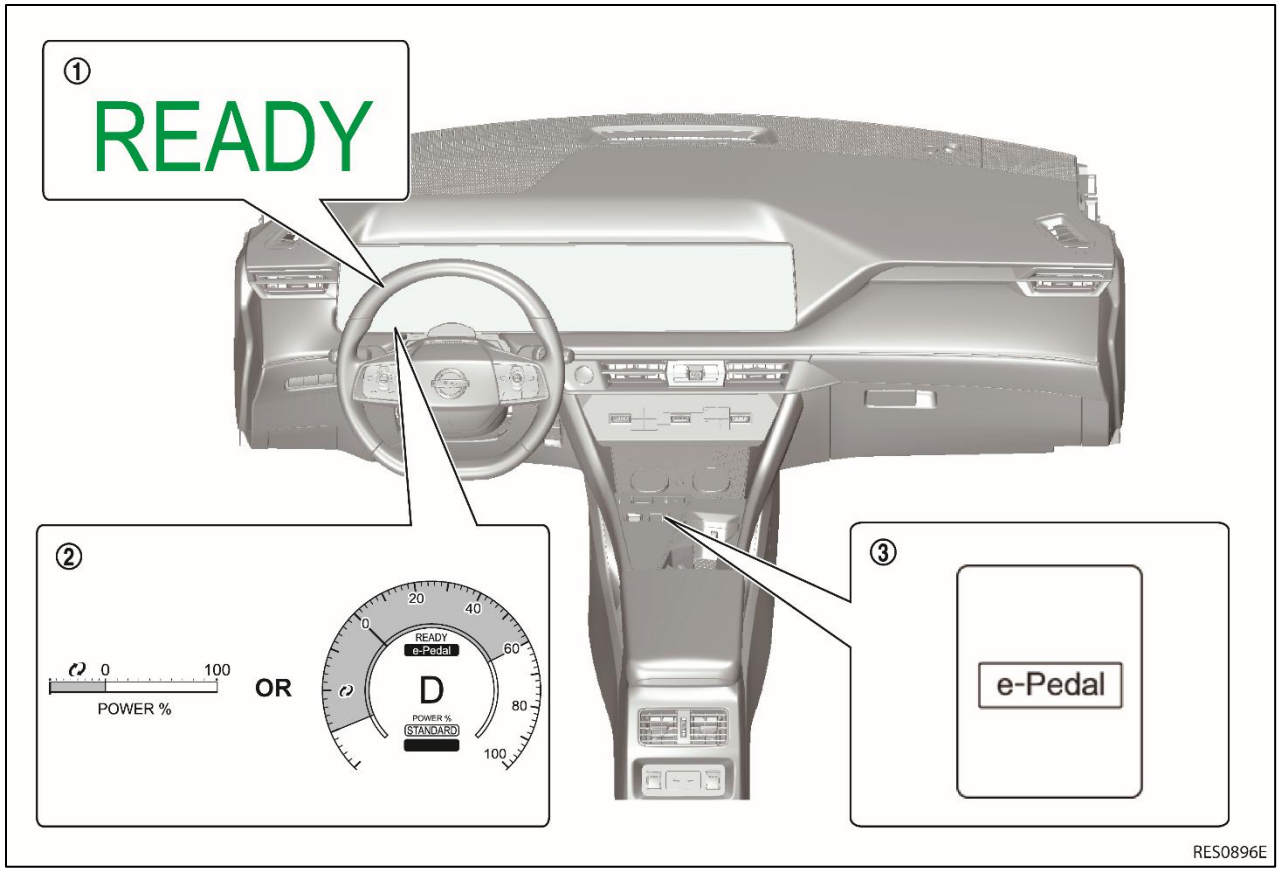

1. READY to drive indicator 2. Power meter 3. e-Pedal switch

1-1.3 Vehicle Identification Number (VIN) Layout

The vehicle identification number can be located as follows:
Example VIN : JN8AT4AAXVWXXXXXX

The ROGUE Hybrid e-POWER is identified by the 4th alphanumeric character: A

A = ZR15DDTe (Engine type)

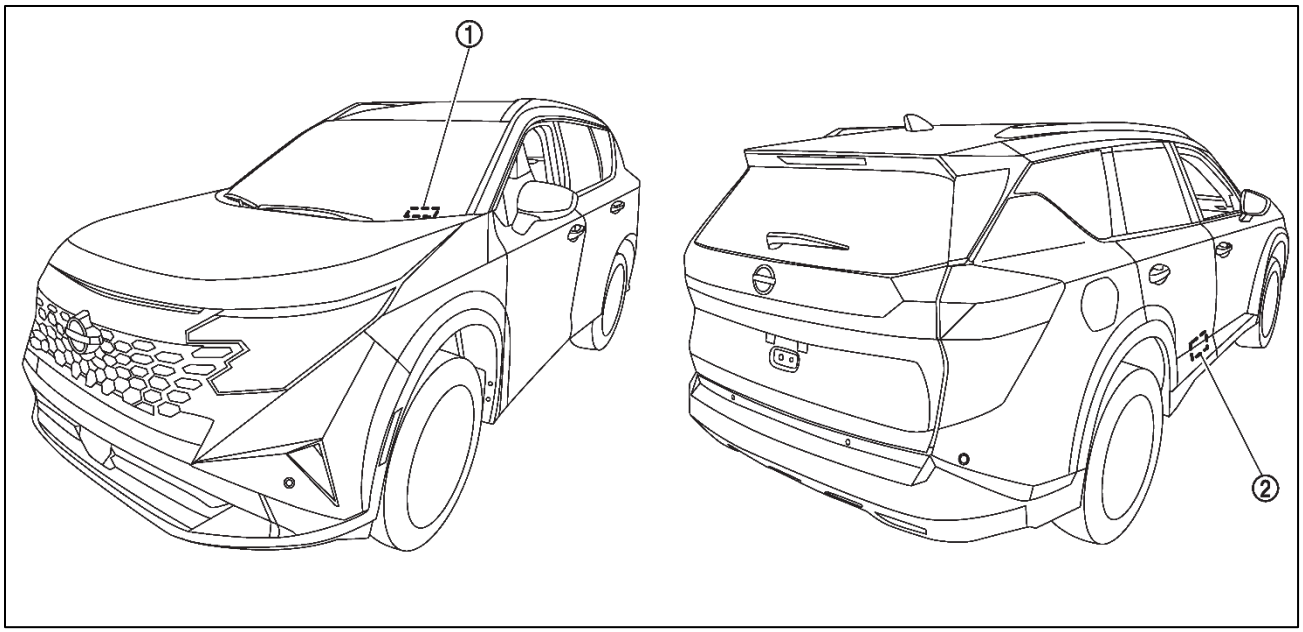

1. Vehicle identification number plate
2. Vehicle identification number (Chassis number)

1-1.4 Warning and Indicator Lamp Information

The following warning and indicator lamps are located in the instrument cluster.

Lamp Name	Icon	Description
READY to drive Indicator		This lamp is on when the Hybrid e-POWER system is powered up and the vehicle is ready to drive.
Hybrid e-POWER system warning lamp		▪ Malfunction has occurred in the Hybrid e-POWER system and/or Emergency shut-off system has been activated. The shutoff system activates in the following conditions: – Front and side collisions in which the air bags are deployed. – Certain rear collisions. – Certain Hybrid e-POWER system malfunctions.
Master warning lamp (RED)		This lamp is on when another red warning lamp is displayed in the instrument cluster or a warning is displayed on the vehicle information display.
Master warning lamp (YELLOW)		This lamp is on when a yellow warning lamp is displayed in the instrument cluster or a message is displayed on the vehicle information display.

1-1.5 High-Voltage-Related and 12-volt-Related Component Locations and Descriptions

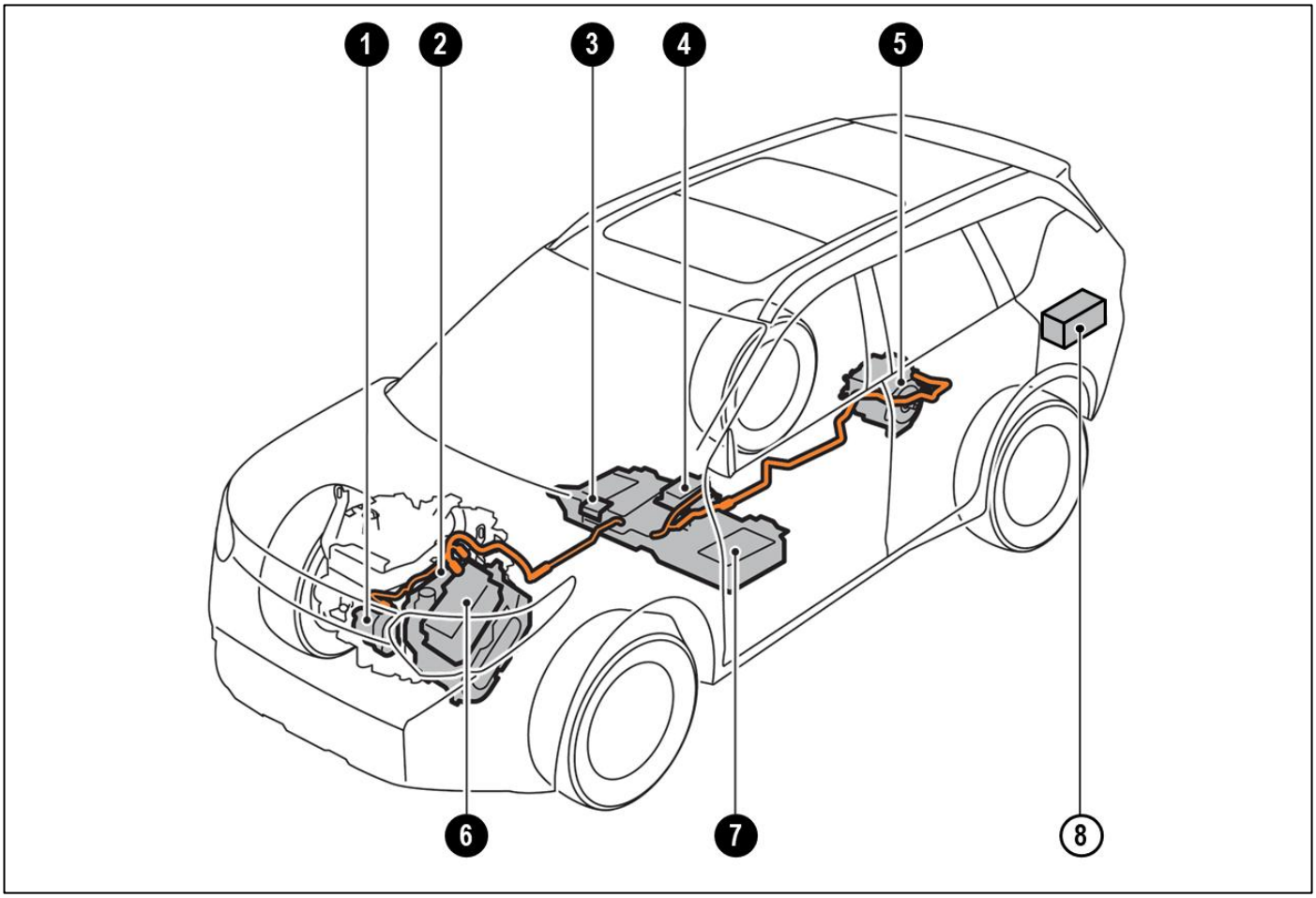

NOTE:

Components with white number in black background are high-voltage components.

No.	Component	Location	Description
❶	Air conditioner compressor (Electric compressor)	Engine room	Exclusive use motor operated with high voltage compresses refrigerant gas for high pressure.
❷	High voltage harness (orange color)	Engine room	Orange colored power cables carry high voltage power between each of the high voltage components.
		Under floor	high-voltage battery is connected to high voltage parts with orange harness and supply high voltage electric power.
❸	Service plug	Under passenger seats	Mechanically disconnects high voltage circuit from high-voltage battery.
❹	DC/DC converter	Under floor carpet	Reduces the voltage of the high-voltage battery to provide power to the 12-volt battery.
❺	Rear inverter	Under rear floor panel	The DC current from the high-voltage battery is converted to AC current and supplied to the rear traction motor.
	Rear traction motor		Converts 3 phase AC electric power to torque for vehicle propulsion.
❻	Inverter	Engine room	▪ The AC current generated by the generator is converted to DC current and supplies it to the high-voltage battery. ▪ The DC current from the high-voltage battery is converted to AC current and supplied to the front traction motor.
	Generator		Generates electric power using engine power. The generated electric power is used to charge the high-voltage battery and to supply power to the traction motor.
	Traction motor		Converts 3 phase AC electric power to torque for vehicle propulsion.
❼	High-voltage (Li-ion) battery	Transversely under the driver and front passenger seats	Stores and outputs DC electrical energy needed to propel the vehicle.
⑧	12V Battery	luggage room	Supplies electric power to electric devices operated with 12-volt.

High-Voltage Battery Pack Specifications

High-voltage battery voltage	355.2 V (nominal)
Number of high-voltage battery modules in the pack	4
High-voltage battery dimensions	8.48 x 38.31 x 19.80 in. (215.5 x 973.1 x 502.9 mm)
High-voltage battery weight	112.01 lbs. (50.8 kg)

1-1.6 High-Voltage Safety Measures

Circuit insulation	The high-voltage positive (+) and negative (-) circuits are insulated from the metal chassis.
Reducing the risk of electrocution	The high-voltage components and harnesses have insulated cases or orange-colored coverings which provide insulation and easy identification. The high-voltage battery case is electrically connected to the vehicle ground. This connection helps protect the vehicle occupants and emergency responders from high-voltage electrical shock.
Identification	The high-voltage components are labeled "WARNING" similar to the label shown below. All high-voltage harnesses are coated in orange.

Warning Labels

EXAMPLE





1-1.7 High-Voltage Circuit Shut-Off System

The high-voltage can be shut off by the following methods:

Power switch	It is a switch for changing the vehicle power state, and when it is pressed and held while the vehicle is in the READY ON state, it shuts off the high-voltage circuit.
Service plug	It is installed under the front passenger seat on the high-voltage battery, and the high-voltage circuit is shut off by manually pulling it out from the high-voltage battery.
System main relay (located in high-voltage battery)	Controlled by the power switch, this relay, which is controlled by the 12-volt system, shuts off the high-voltage from the high-voltage battery.
Emergency shut-off system	In the case of a collision (front and side collisions in which the air bags are deployed, certain rear collisions) or certain system malfunctions this system is designed to shut off the high-voltage from the high-voltage battery.
Loop harness (Cable cut)	In preparation for situations where the power switch cannot be operated due to vehicle damage, a loop harness is provided in the engine room. Cutting the loop harness shuts off the high-voltage circuit.

1-1.8 Preventing Electrical Shock

1. If it is necessary to touch any of the high-voltage harnesses or components, you must always wear appropriate Personal Protective Equipment (PPE) (refer to 2-2 Preparation Items) and shut off the high-voltage system by referring to 3-1.2 Powering Down the High-voltage System.
2. To avoid the risk of electrocution, never touch the inside of the high-voltage battery unless appropriate PPE is worn even after shutting off the high-voltage system. The high-voltage battery maintains charge even though the high-voltage system is shut down.
3. Cover any damaged high-voltage components with insulated tape.

1-1.9 Emergency Medical Equipment

The high-voltage system should not interfere with emergency medical equipment which must be used in or near the vehicle at an accident scene.

2. Immobilization / Stabilization / Lifting

2-1 Emergency Response Steps

⚠ DANGER

- ⚠ Failure to properly shut down the high-voltage electrical system before the Emergency Response Procedures are performed will result in serious injury or death from electrical shock. To prevent serious injury or death, NEVER touch high-voltage harnesses or components without always wearing appropriate Personal Protective Equipment (PPE).
- ⚠ If it is necessary to touch any of the high-voltage harnesses or components you must always wear appropriate PPE to avoid electrical shock. Shut down the high-voltage system by following the steps outlined in 3-1.2 Powering Down the High-voltage System. Wait at least ten (10) minutes for complete discharge of the high-voltage capacitor after the high-voltage system has been shut down.

⚠ WARNING

- ⚠ To avoid risk of death or severe injury never assume the vehicle is shut off simply because it is quiet.
- ⚠ If the READY to drive indicator is ON, the high-voltage system is active.
- ⚠ If possible, be sure to verify that the READY to drive indicator on the instrument cluster is OFF and the high-voltage system is stopped.
- Some of the under hood parts get hot and may cause serious burns. Use caution when working on or around these parts and deployed airbags as applicable.

2-2 Preparation Items

Preparation Items	Specification	Purpose
Personal Protective Equipment (PPE): Insulated gloves 	▪ Use protective gloves made of insulating material. ▪ The protective gloves must be capable of resisting the voltage of 600 V or more.	For protection from high-voltage electrical shock
Insulated shoes 	▪ Use safety shoes made of insulating material. ▪ The safety shoes must be capable of withstanding a voltage of 500 V or more.	
Safety shield 	–	
Leather gloves 	Must be able to fasten tight around the wrist (worn over insulated gloves).	To protect insulated gloves
Wrenches 	Size: 10mm	To remove the service plug access cover bolts. To remove the 12-volt battery terminal bolt.
Solvent resistant protection gloves	–	To utilize in the event of a high-voltage battery electrolytic solution leak.
Solvent resistant protection shoes	–	
Infrared (IR) thermometer or non-contact thermometer	Capable of measuring up to approximately 500°C	High-voltage battery temperature check.
Absorbent pad	The same pad used for internal combustion engine fluids can be used.	To absorb any high-voltage battery electrolytic solution leakage.
Standard fire fighting equipment	Standard fire fighting equipment Depending on type of fire (vehicle or battery) use standard fire fighting equipment (water or extinguisher).	To extinguish a fire.
Insulated tape	Insulating	To cover any damaged harnesses to protect from and prevent electrical shock. Tape should cover all bare or damaged wire.
Insulated sheet	Insulating	Insulation treatment for exposed high-voltage components

2-2.1 Personal Protective Equipment (PPE) Protective Wear Control

Perform an inspection of the Personal Protective Equipment (PPE) items before beginning work. Do not use any damaged PPE items.

2-2.2 Daily Inspection

This inspection is performed before and after use. The responder who will be using the items should perform the inspection and check for deterioration and damage.

- Insulated rubber gloves should be inspected for scratches, holes and tears. (Visual check and air leakage test)
- Insulated safety boots should be inspected for holes, damage, nails, metal pieces, wear or other problems on the soles. (Visual check)
- Insulated rubber sheet should be inspected for tears. (Visual check)

2-2.3 Insulated Tools

When performing work at locations where high-voltage is applied (such as terminals), use insulated tools meeting 1,000V/300A specifications.

2-3 Vehicle Immobilization and Stabilization

If possible, immobilize the vehicle by turning the 12V system OFF and stabilize it with a wheel chock(s).

First Responders:

- Stabilize the vehicle with cribbing, by removing air from the tires, or utilize the Lift Airbag Equipment for rescue.

Dismantlers/Roadside Assistance Workers:

- Stabilize the vehicle with wooden blocks or by removing air from the tires.

⚠WARNING

- To avoid risk of death or severe injury do not put wheel chock(s) under the high voltage components and harnesses.
- Do not put Lift Airbag Equipment for rescue under the high voltage harnesses and connector of high-voltage battery.
- Do not put any equipment's for rescue under the high voltage components and harness when inside of high voltage components or harnesses are exposed.

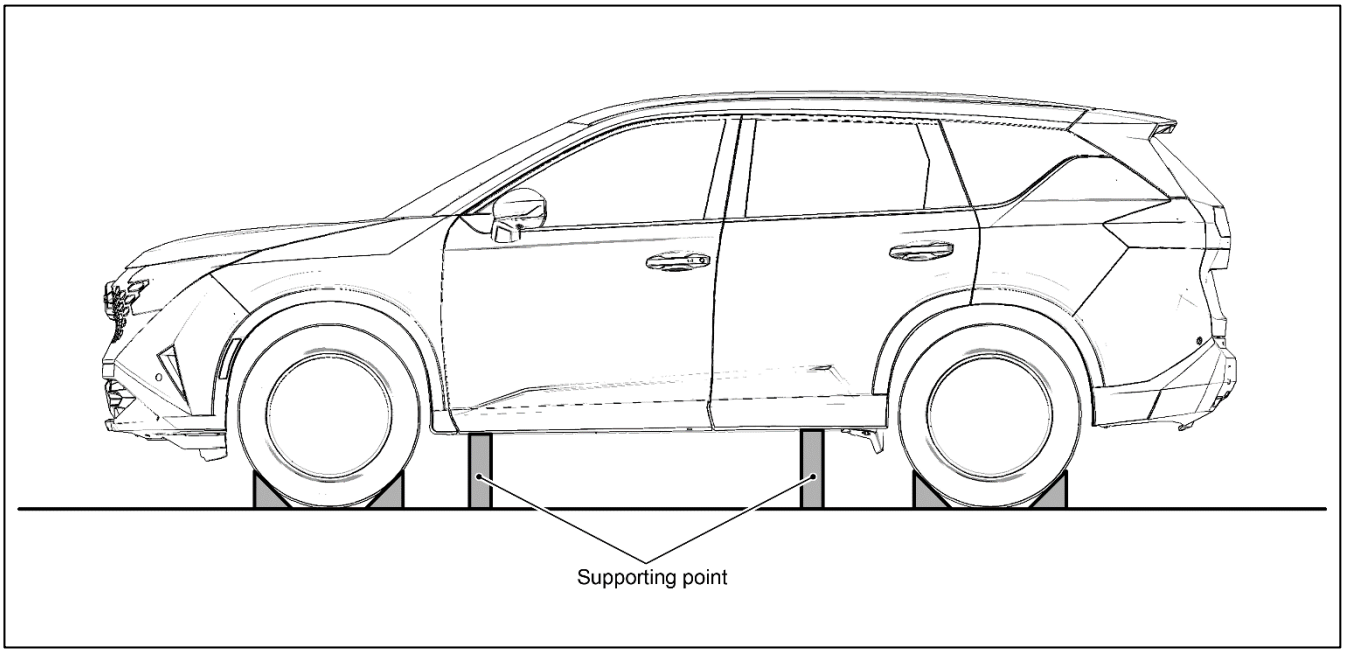

3. Disable Direct Hazards / Safety Regulations

3-1 How to Handle a Damaged Vehicle at an Accident Scene

If the operation is needed for the following systems, please operate them before battery disconnection.

- Door lock
- Power window
- Power seat
- Back door
- Electric parking brake

NOTE:

If any air bags have deployed in the following 3 situations, the high-voltage (HV) system has been designed to automatically shut off at the time of deployment.

The ROGUE Hybrid e-POWER high-voltage system incorporates capacitors which are energized whenever the high-voltage system is on. If the high-voltage system is shut down (either through one of the built-in automatic mechanisms or manually through one of the procedures explained in this ERG), the capacitors will begin to gradually discharge. After 5 minutes, the voltage level will have dropped below 60V, and complete discharge requires approximately 10 minutes after high-voltage system shut down. It is within this period of time that responders must be most cautious.

⚠WARNING

After the high-voltage system is shut down, voltage may remain present in the system capacitors. Although capacitor voltage drops below 60V after approximately 5 minutes, complete discharge requires approximately 10 minutes. Responders must exercise extreme caution during this 10-minute discharge period, as residual high voltage may still be present and could result in death or serious injury from electric shock.

When arriving to an incident involving an ROGUE Hybrid e-POWER, the vehicle should be approached with caution and inspected for the level of damage. In addition to overall vehicle condition (location and severity of body damage, air bag deployment, etc.), the high-voltage system should be assessed specifically. The locations of the high-voltage component parts are illustrated in this ERG. Refer to 1-1.5 High-Voltage-Related and 12-volt-Related Component Locations and Descriptions. Appropriate Personal Protective Equipment (PPE) must always be worn when approaching a vehicle of unknown condition, as described in this ERG.

Situation 1) High-voltage system intact, occupants can be accessed without extrication tools

The HV system can be shut down by following the procedures in this guide, while wearing appropriate PPE. After HV system shutdown, occupant assistance can begin immediately, and no wait period is necessary.

Situation 2) High-voltage system intact, occupants cannot be accessed without extrication tools

The HV system can be shut down by following the procedure in this guide, while wearing appropriate PPE. After HV system shut down, absolute care must be taken not to cut through or damage any HV system wiring, battery or components within ten (10) minutes of HV system shut down, but occupant assistance operations using extrication equipment can begin immediately. The locations of the HV components are illustrated in this guide.

Situation 3) High-voltage (HV) system damaged

If there is any evidence that the HV system has been compromised (such as arcing/sparking, orange wiring harnesses cut or damaged, HV component casings damaged, etc.), the responder may still be at risk of high-voltage exposure. The vehicle must be approached with extreme caution prior to initiating any system shut down procedures or rendering assistance to occupants. Appropriate PPE must always be worn as described in this guide, and the ten (10) minute wait time must be observed after HV system shut down in order to ensure the system is de-energized.

In rare situations where vehicle damage is very severe, HV system shut down procedures as described in this guide may not work. In these instances extreme caution and appropriate risk management must be followed to prevent shock or electrocution to the responder or occupant.

3-1.1 High-voltage System Shut-Down Procedures

Any of the following procedures can shut down and isolate the high-voltage system. The first response operation should only begin after shutting down the high-voltage system. If the vehicle is heavily damaged, for example the high-voltage battery is deformed, broken or cracked, appropriate Personal Protective Equipment (PPE) must always be used and the high-voltage battery and high-voltage components must not be touched.

⚠ DANGER

- Failure to properly shut down the high-voltage system before the Emergency Response Procedures are performed will result in serious injury or death from electrical shock. To prevent serious injury or death, NEVER touch high-voltage harnesses or components without always wearing appropriate Personal Protective Equipment (PPE). PPE must always be worn when touching or working on high-voltage components.
- When contact with high-voltage components or high-voltage harnesses is unavoidable, or when there is risk of such contact, you must always wear appropriate PPE. PPE must always be worn when touching or working on high-voltage components.

⚠WARNING

- To avoid the risk of death or serious injury, persons wearing a pacemaker or other medical device must not perform work on the vehicle. The vehicle contains parts that contain powerful magnets. If a person wearing a pacemaker or other medical device gets close to these parts, the medical device may be affected by the magnets.
- Be sure to verify that the READY to drive indicator is off and the high-voltage system is stopped.
- After the high-voltage system is shut down, please wait at least ten (10) minutes for complete discharge of the high-voltage capacitor. While waiting, do not operate any vehicle functions.

  NOTE:

  The high-voltage full discharge takes ten (10) minutes, but after five (5) minutes the voltage has dropped below 60V.

- After shutting down the high-voltage system and removing the 12-volt battery negative (-) terminal, wait at least three (3) minutes to discharge the air bag capacitor. Even though the 12-volt battery negative (-) is disconnected, the Supplemental Restraint System (SRS) air bag maintains voltage at least three (3) minutes. During this time, there is a possibility of sudden SRS air bag inflation due to harness short circuit or damage and it may cause serious injuries.
- Always shut down the high-voltage system before disconnecting the 12-volt battery. Not doing so may result in serious injury or death from electrical shock.
- The 12V system will remain active even after the 12-volt battery negative (-) terminal is removed while the high-voltage system is active. The high voltage system is active during READY to drive indicator lamp is turned ON.
  Refer to 1-1.2 Interior Component Location for location of these indicators. This is because DC/DC converter will not shut down and power will be supplied to the 12V system and high-voltage system continuously.

3-1.2 Powering Down the High-voltage System

The high-voltage system can be shut down with any 1 of the following procedures:

- Turn OFF the power switch and disconnect the 12-volt battery. Refer to 3-1.3 Primary Procedure.
- When the power switch cannot be operated due to vehicle damage. Refer to 3-1.4 Alternate Procedure 1 (Cable cut) .
- Remove the service plug and disconnect the 12-volt battery. Refer to 3-1.5 Alternate Procedure 2 (Remove Service Plug) .

3-1.3 Primary Procedure

1. Check the READY to drive indicator lamp status. If it is ON, the high voltage system is active.
2. Place the selector lever in the Park (P) position.
3. Press and hold the power switch for 2 seconds or more to turn the high-voltage system OFF. Then verify whether the READY to drive indicator lamp is OFF.

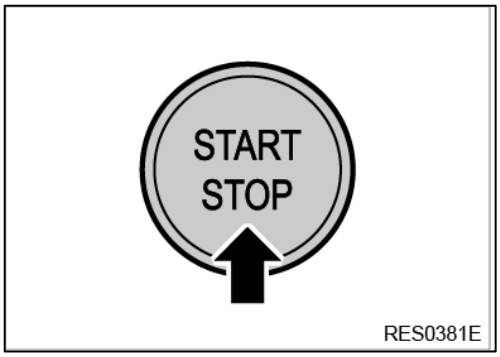

4. If possible, keep the Nissan Intelligent Key® at least 16 feet (15 meters) away from the vehicle.

   NOTE:

   This step is not necessary if the 12V system is already disabled.

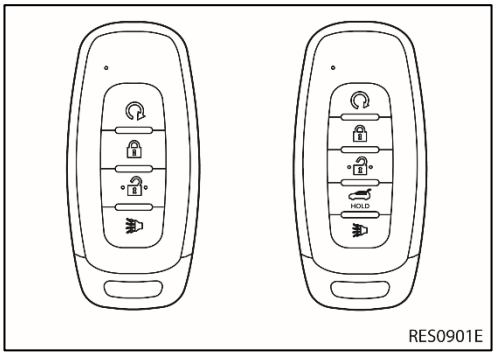

5. Open the back door.

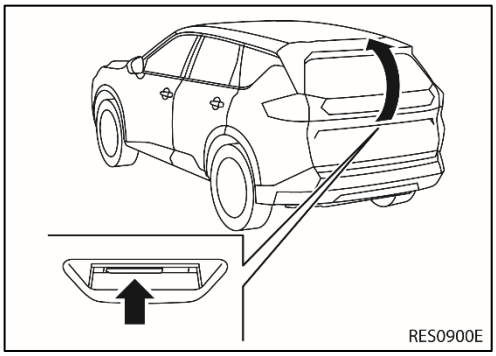

6. Remove finisher (1) on the left side of the cargo area.

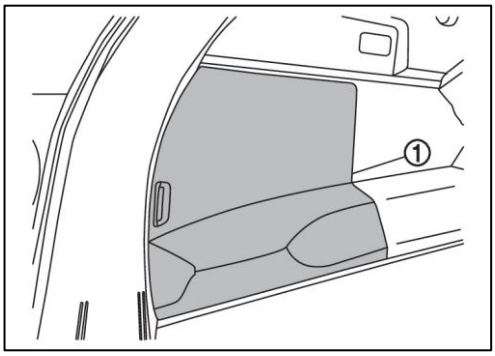

7. Disconnect 12 V battery negative terminal (1) and apply insulation tape.

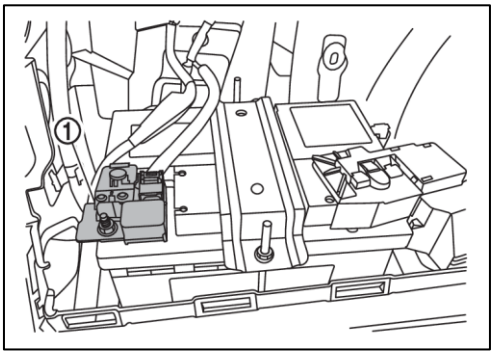

⚠WARNING

If the 12V battery cannot be disconnected, the SRS airbags may deploy and this could directly lead to risk of death or serious injury.

8. Wait at least ten (10) minutes for complete discharge of the high voltage capacitor after the power switch has been turned OFF.
9. Perform the emergency response, roadside assistance action or dismantling operation.

3-1.4 Alternate Procedure 1 (Cable cut)

1. Open the hood using the following steps:

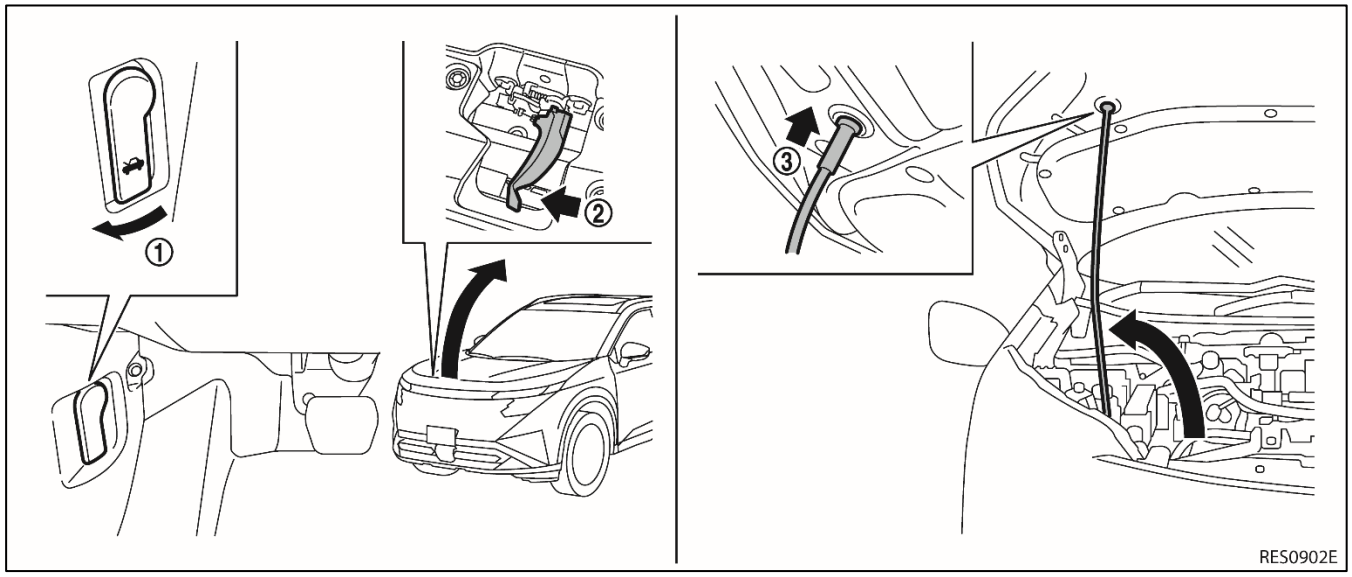

2. Cut off both ends of the first responder label located on the front right side of the engine room when viewed from the front of the vehicle.

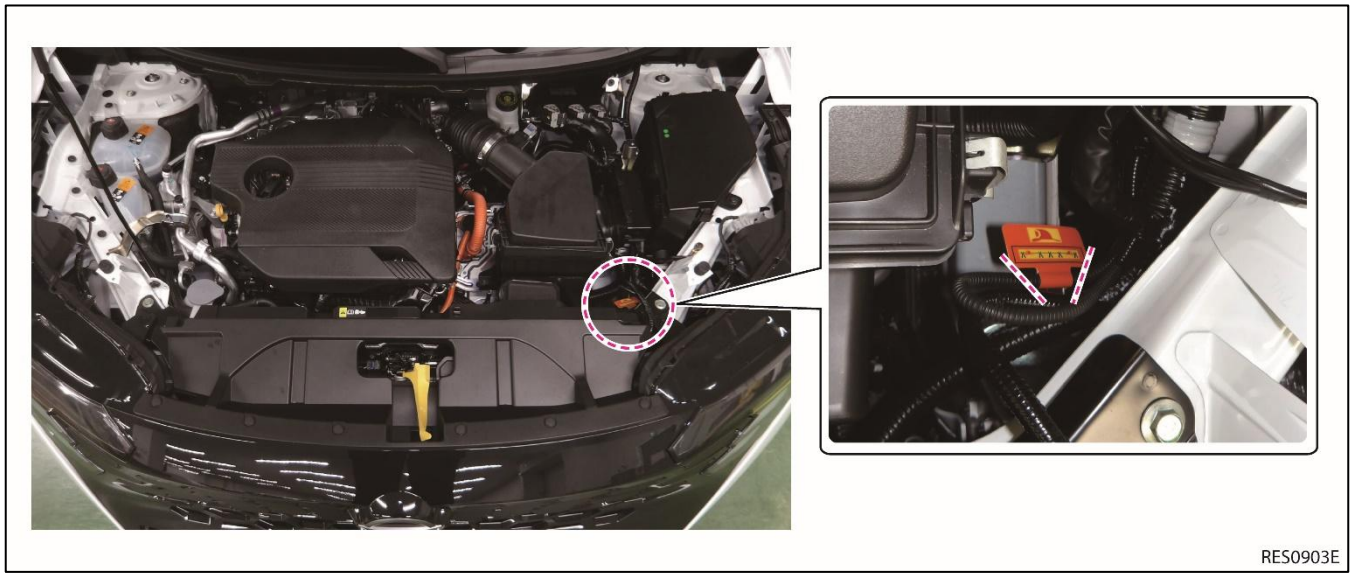

3. Open the back door.

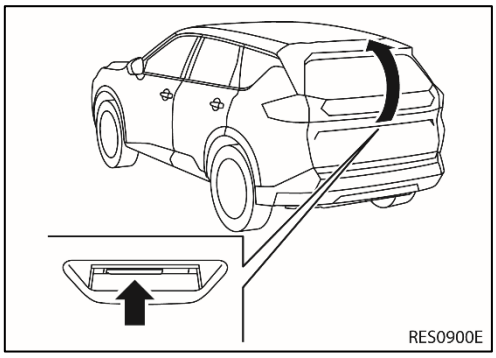

4. Remove finisher (1) on the left side of the cargo area.

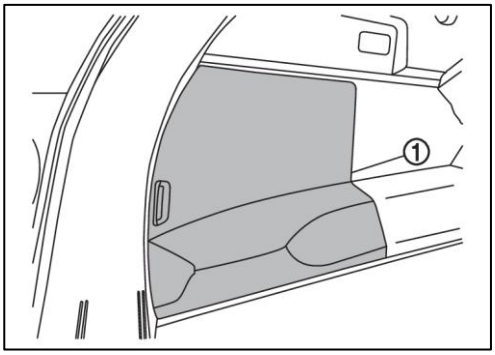

5. Disconnect 12 V battery negative terminal (1) and apply insulation tape.

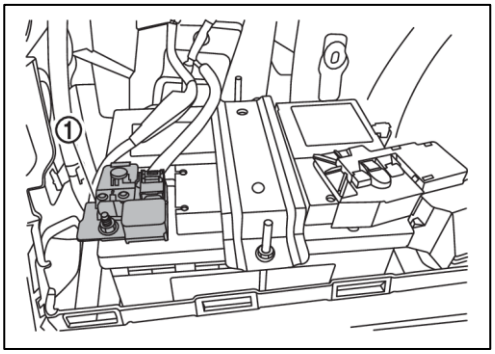

⚠WARNING

If the 12V battery cannot be disconnected, the SRS airbags may deploy and this could directly lead to risk of death or serious injury.

6. Wait at least ten (10) minutes for complete discharge of the high voltage capacitor after the power switch has been turned OFF.
7. Perform the emergency response, roadside assistance action or dismantling operation.

3-1.5 Alternate Procedure 2 (Remove Service Plug)

DANGER

- Do not remove the service plug without always wearing appropriate Personal Protective Equipment (PPE) to help protect the responder from serious injury or death by electrical shock.
- Immediately cover the service plug socket with insulated tape. The high- voltage battery retains high-voltage power even when the service plug is removed. To avoid electric shock, NEVER touch the terminals inside the socket.

WARNING

To avoid unintended reinstallation and risk of electrical shock and severe personal injury or death, the rescuer should carry the service plug on his/her person while work is in progress.

1. Check the READY to drive indicator lamp status. If it is ON, the high voltage system is active.
2. Place the selector lever in the Park (P) position.
3. Press and hold the power switch for 2 seconds or more to turn the high-voltage system OFF. Then verify whether the READY to drive indicator lamp is OFF.

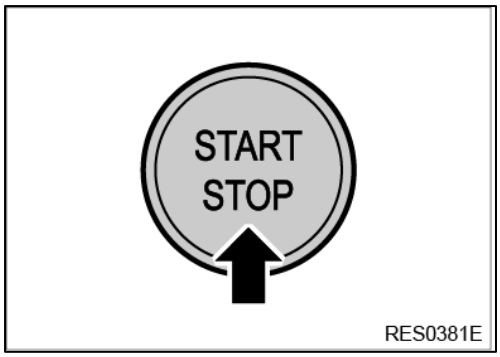

4. If possible, keep the Nissan Intelligent Key® at least 5 meters (16 feet) away from the vehicle.

NOTE:

This step is not necessary if the 12V system is already disabled.

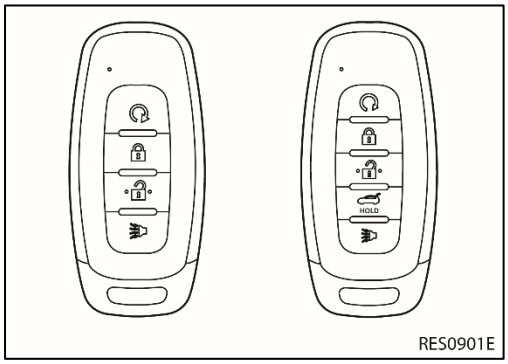

5. Turn up the floor carpet under the passenger seat, remove the mounting nuts of the service plug cover (1), and remove the service plug terminal cover.

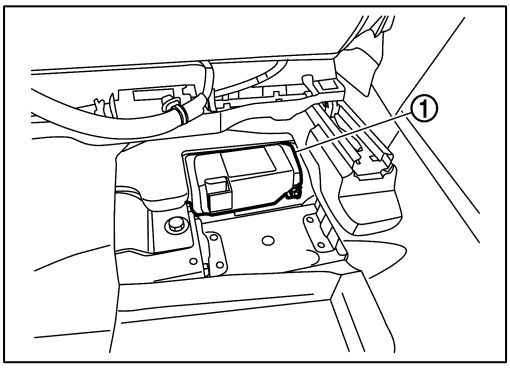

6. Remove the service plug using the following steps:

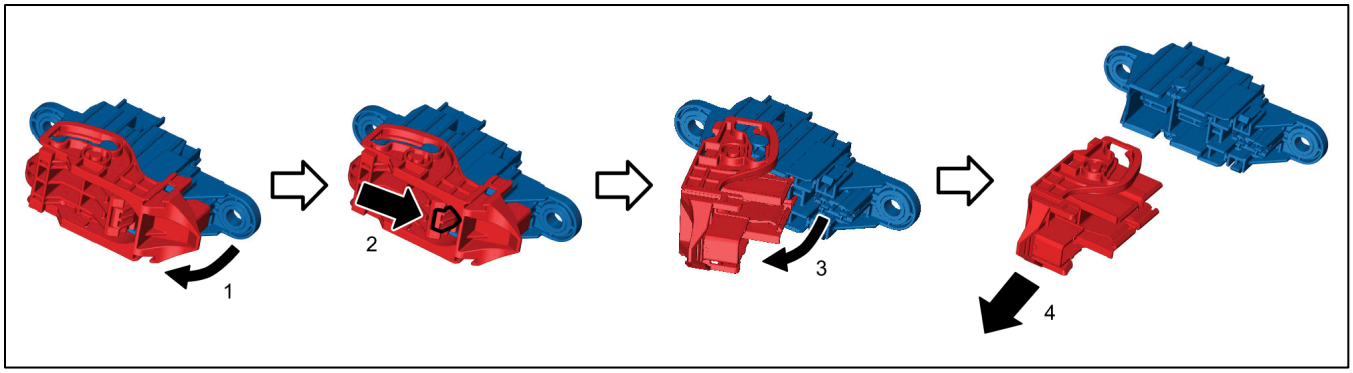

1. Pull the lever
2. Press the locking tab
3. Release and rotate fully upward
4. Pull and remove the service plug completely out of its socket.

7. Wait at least ten (10) minutes for complete discharge of the high voltage capacitor after the service plug has been removed.
8. If possible, disconnect 12 V battery negative terminal and apply insulation tape.

⚠WARNING

If the 12V battery cannot be disconnected, the SRS airbags may deploy and this could directly lead to risk of death or serious injury.

4. Access to the Occupants

4-1 Accessing the Occupants

1. Remove windows.
   a. The types of glass used in this vehicle are as follows. Laminated glass has a film interlayer, so it is more difficult to break than tempered glass.

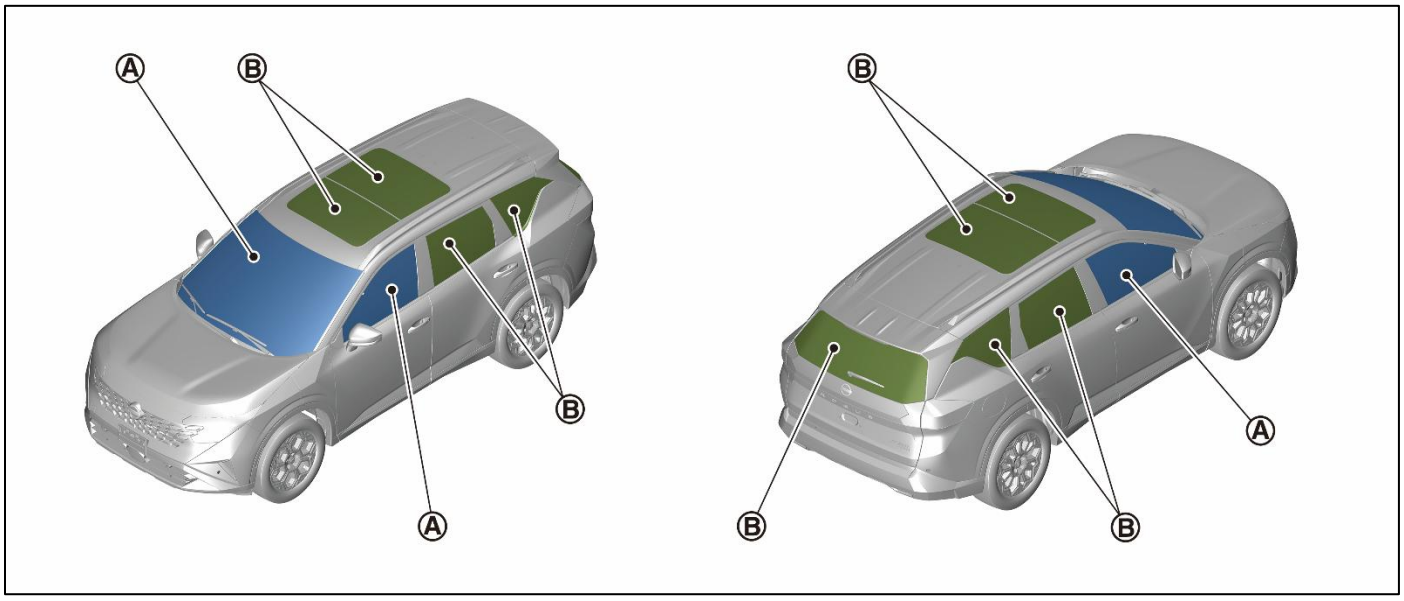

A: Laminated glass

B: Tempered glass

2. Remove doors.
   a. Door:
   The doors can be opened by operating the knob or handle installed on the door. The doors are removable with hand tools or basic rescue tools such as electrical/hydraulic rescue tools. It may be easier to remove the doors by cutting door hinges.

⚠CAUTION

If the door is locked, pull out the mechanical key from the Intelligent Key, then separate the key plate from the key head, and then insert the key plate into the key cylinder inside the door handle to unlock it.

Example

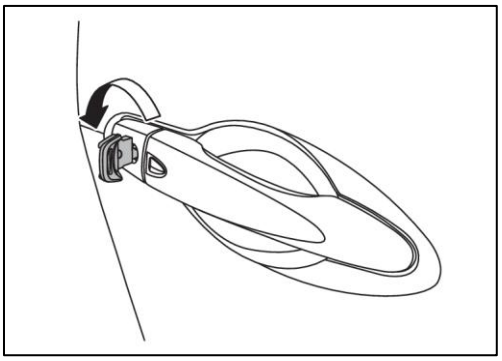

3. Adjust steering wheel (if necessary).
   a. Pull the lock lever (1) down and adjust the steering wheel up or down, forward or rearward to the desired position. Push the lock lever up securely to lock the steering wheel in place.

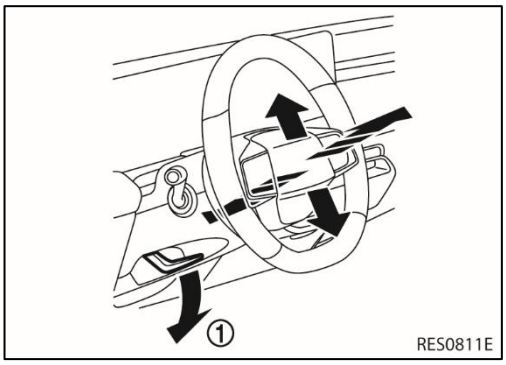

4. Adjust front seat
   a. MANUAL SEAT —The front seat can be manually adjusted forward and backward by pulling up and holding lever (1). Also, the seatback can be manually tilted forward and backward by pulling up and holding lever (2).

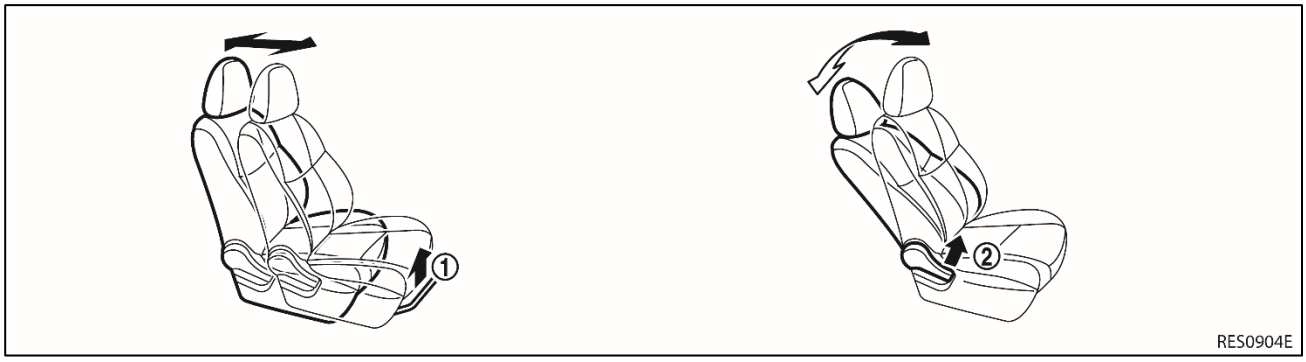

   b. POWER SEAT — Seat Position: Move the seat position to forward or backward by the adjusting switch (1); — Seat-Back: Move the seat-back to forward or backward by the adjusting switch (2); — Seat Lifter: Move the seat height to desired position by the adjusting switch (3).

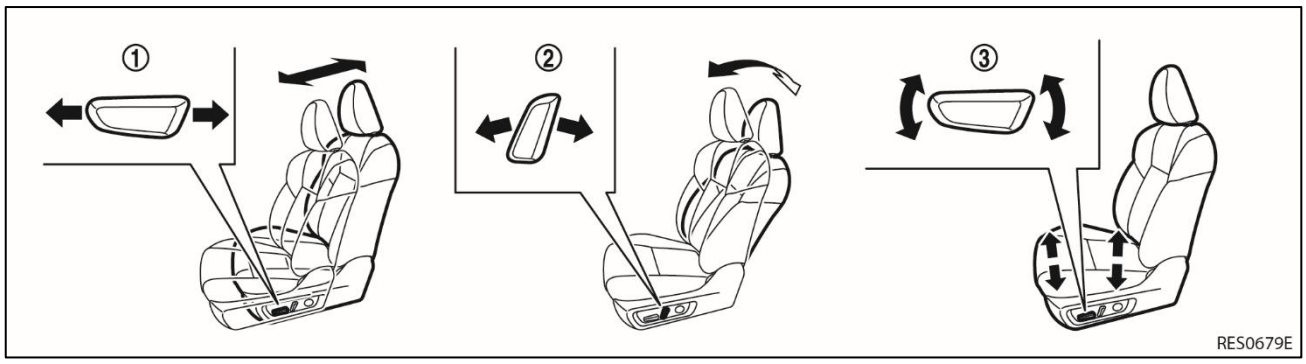

5. Remove front seat head restraint (if necessary).

   The front seat head restraint can be removed by pressing the lock knob and pulling it up.

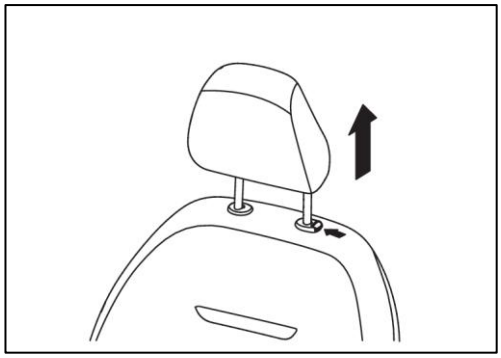

6. Unfasten the seat belt.

   Seat belt can be unfastened by pressing the release button. If seat belt cannot be unfastened, cut it with a belt cutter.

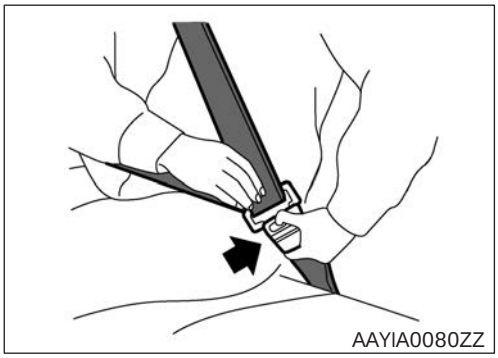

4-2 Cutting the Vehicle Body

DANGER

- Do not cut into high-voltage related areas to avoid severe personal injury or death.
- Do not cut into the high-voltage battery to avoid severe personal injury or death.
- When removing parts, NEVER touch the high-voltage parts or the insides of the exposed orange-colored high-voltage cables to avoid severe personal injury or death. Personal Protective Equipment (PPE) must always be worn when touching or working on high-voltage components.

WARNING

- Do not cut air bag parts to avoid unintended deployment of the air bags and the risk of severe personal injury or death.

If at least ten (10) minutes have passed since the rescuer shut down the high-voltage system (refer to 3-1.2 Powering Down the High-voltage System), then the rescuer can cut the vehicle except for the high-voltage battery.

WARNING

- If the rescuer cannot wait the full ten (10) minutes or shut down the high-voltage system, absolute care must be taken to avoid cutting HV parts and appropriate Personal Protective Equipment (PPE) must always be worn. DO NOT cut the high-voltage battery due to possible electrocution risk and electrolyte solution leakage.

4-2.1 SRS Air Bag System Components Location

Avoid cutting air bag system parts. However, the vehicle can be cut (except inflators) under the following conditions:

- The front, side and curtain air bags have deployed.
- At least three (3) minutes have passed after the 12-volt battery negative (-) cable has been disconnected and the high-voltage system has been shut down.

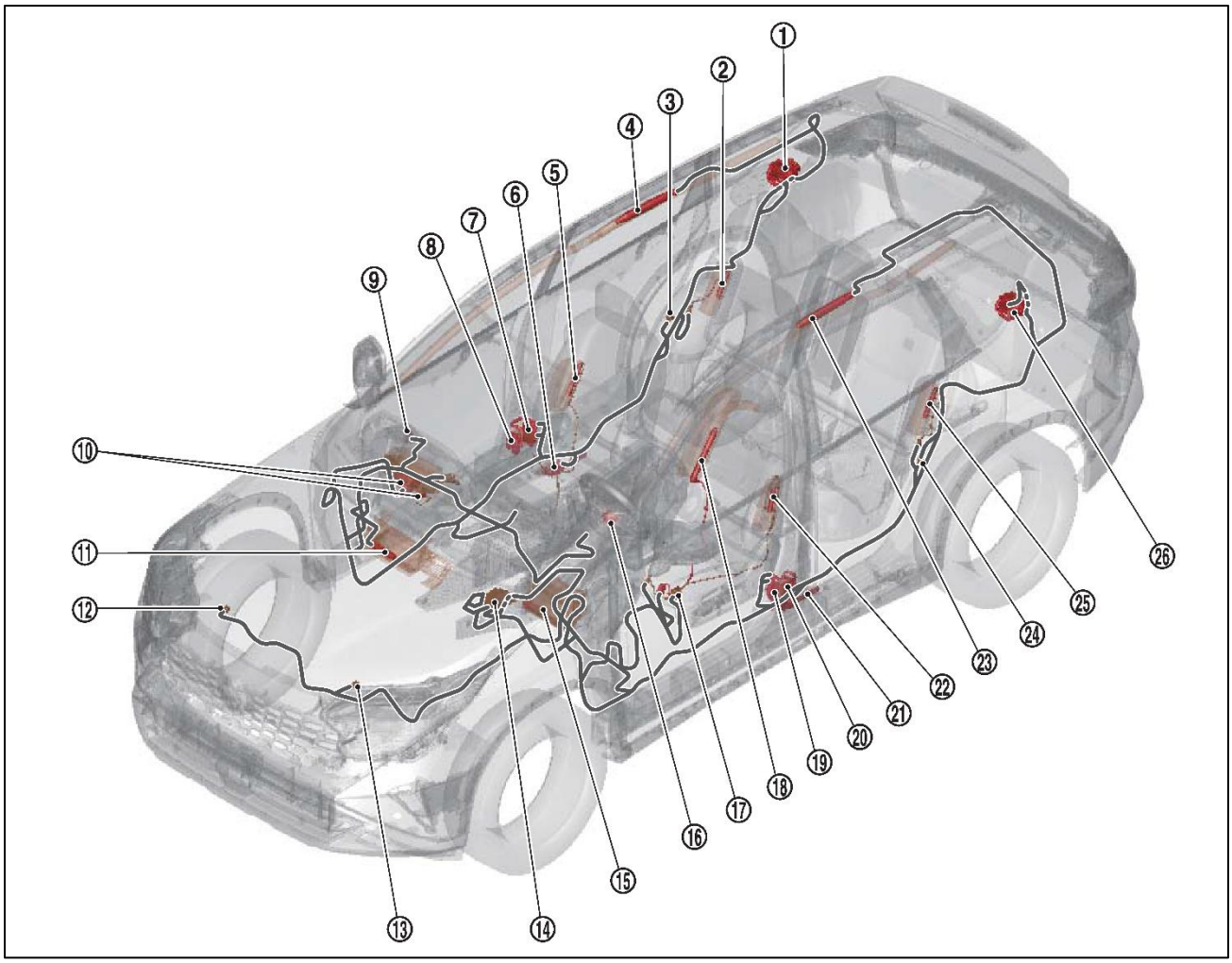

1. Rear seat belt pre-tensioner inflator (right side)	2. Rear side air bag module inflator (right side)	3. C-pillar satellite sensor (right side)
4. Curtain air bag module inflator (right side)	5. Front side air bag module inflator (right side)	6. Lap pre-tensioner inflator (right side)
7. Front seat belt force limiter inflator (right side)	8. Front seat belt pre-tensioner inflator (right side)	9. Front door satellite sensor (right side)
10. Passenger air bag module inflator	11. Knee air bag module inflator (right side)	12. Crash zone sensor (right side)
13. Crash zone sensor (left side)	14. Air bag diagnosis sensor unit	15. Knee air bag module inflator (left side)
16. Driver air bag module inflator	17. Front door satellite sensor (left side)	18. Front center air bag module inflator

19. Front seat belt force limiter inflator (left side)
20. Front seat belt pre-tensioner inflator (left side)
21. Lap pre-tensioner inflator (left side)
22. Front side air bag module inflator (left side)
23. Curtain air bag module inflator (left side)
24. C-pillar satellite sensor (left side)
25. Rear side air bag module inflator (left side)
26. Rear seat belt pre-tensioner inflator (left side)

4-2.2 Plastic Parts Locations

The resin parts shown in blue below may not be able to be spread with a spreader.

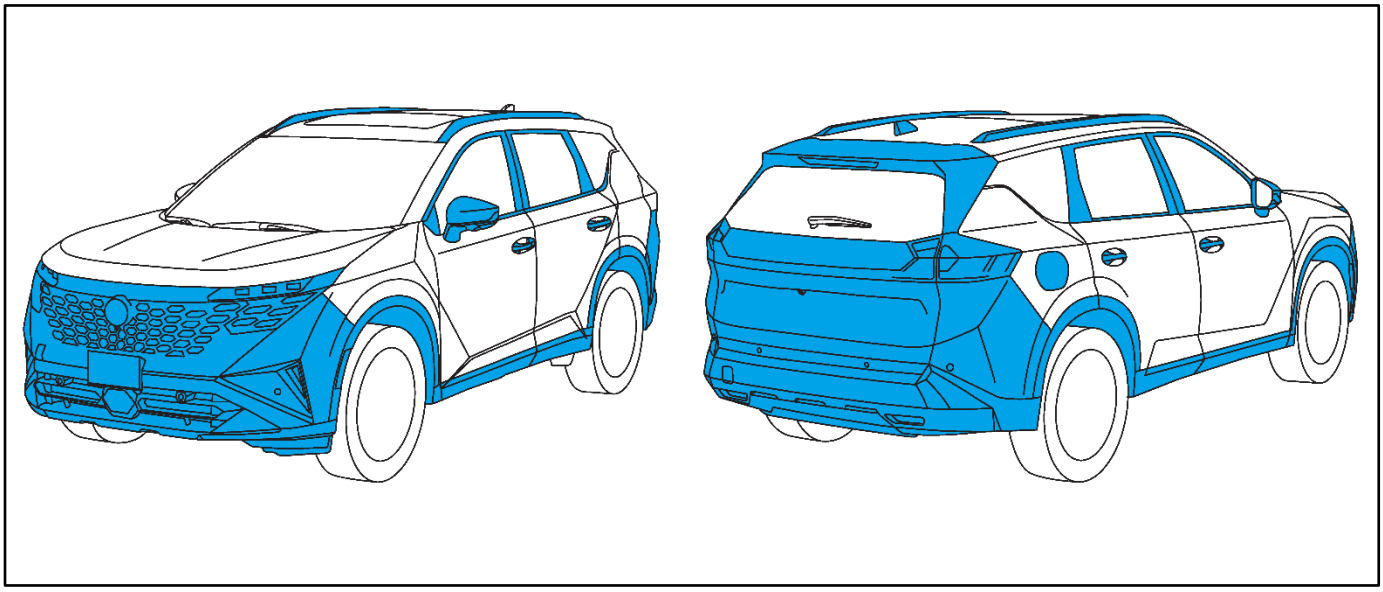

4-2.3 Vehicle Cut Sheet

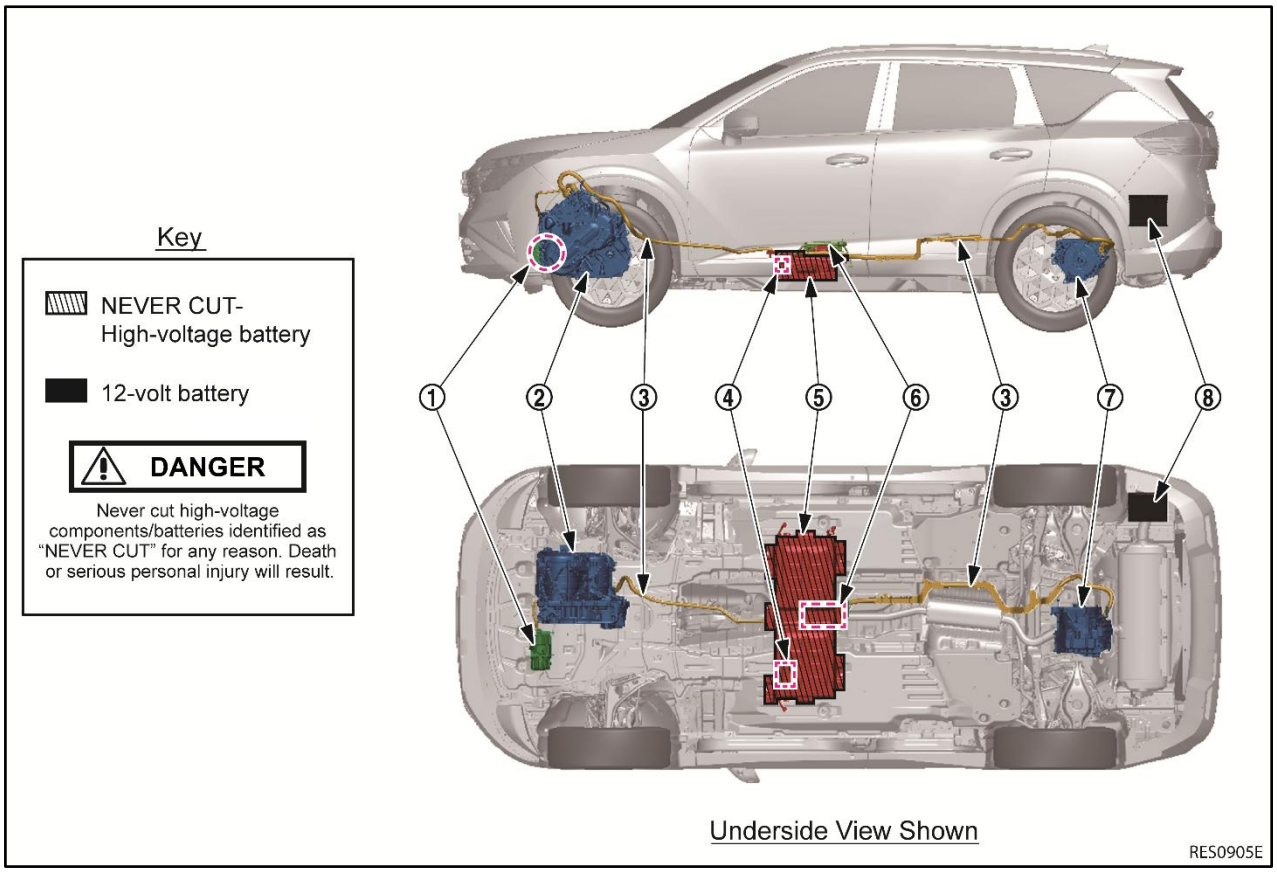

1. Air conditioner compressor (Electric compressor)
2. Electric powertrain assembly
   - Front inverter
   - Traction motor
   - Generator
3. High voltage harness
4. Service plug
5. High-voltage (Li-ion) battery
6. DC/DC converter
7. Rear traction motor (Integrated with rear inverter)
8. 12V Battery

4-2.4 High Strength Steel Locations

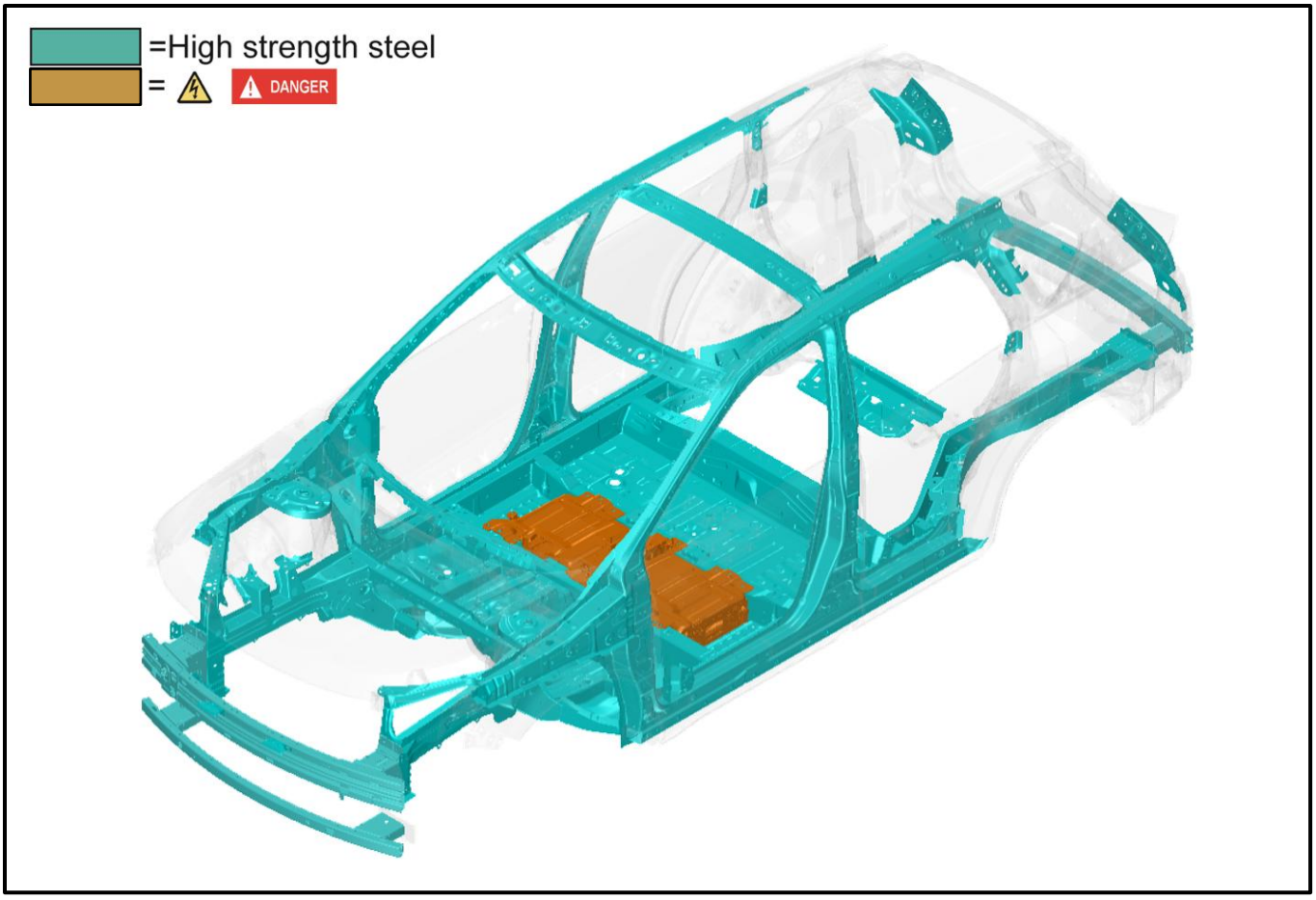

5. Stored Energy / Liquids / Gases / Solids

5-1 High-voltage Battery Damage and Fluid Leaks

⚠WARNING

The high-voltage battery contains electrolyte solution. To avoid exposure to electrolyte solution and serious personal injury, always wear appropriate solvent resistant Personal Protective Equipment (PPE) and read the following precautions:

- Electrolyte solution is a skin irritant – If contact with skin, rinse with plenty of water and see a doctor immediately.
- Electrolyte solution is an eye irritant – If contact with eyes, rinse with plenty of water and see a doctor immediately.
- If electrolyte leak occurs, wear appropriate solvent resistant PPE and use a dry cloth to clean up the spilled electrolyte. Be sure to adequately ventilate the area.
- Electrolyte solution is highly flammable.
- Electrolyte liquid or fumes that have come into contact with water vapors in the air will create an oxidized substance. This substance may irritate skin and eyes. In these cases, rinse with plenty of water and see a doctor immediately.
- Electrolyte fumes (when inhaled) can cause respiratory irritation and acute intoxication. Move to fresh air and wash mouth with water. See a doctor immediately.

First Responders:

- If electrolyte solution leakage, or damage such as any problem with the high-voltage battery casing are observed, first responders should attempt to neutralize the battery by applying a large volume of water to the battery pack while wearing appropriate Personal Protective Equipment (PPE). The neutralization process helps stabilize the thermal condition of the battery pack but does not discharge the battery.

Dismantlers/Roadside Assistance Workers:

- In cases of battery case breach or electrolyte leakage, contact the fire department immediately. If you must walk away from the vehicle, notify an appropriate responder of the fact that the vehicle is an electric car and contains a high-voltage system and warn all others.

High-voltage Battery Electrolyte Solution Characteristics:

- Clear in color
- Sweet odor
- Similar viscosity to water
- Since the high-voltage battery is made up of many small sealed battery modules, electrolyte solution leakage should be minimal.

NOTE:

Other fluids in the vehicle are the same as those in a conventional internal combustion vehicle.

⚠CAUTION

Keep pets and other animals away from the electrolyte.

5-2 12V battery

- The 12V battery supplies power to electrical systems such as the door locks, power windows, power seats, back door, and electronic parking brake.
- After performing the high-voltage system shutdown procedure, remove the negative terminal of the 12V battery to prevent unintended vehicle restart, short circuits, and electrical fires.

6. In Case of Fire

6-1 Vehicle Fire

⚠WARNING

- To avoid risk of death or personal injury always utilize full Personal Protective Equipment (PPE) and self-contained breathing apparatus during firefighting operations. Smoke from an ROGUE Hybrid e-POWER vehicle fire is similar to smoke from a conventional vehicle fire.
- To avoid personal injury do not access the service plug if the following conditions exist:
  - Smoke is coming from the battery.
  - There is an odor of smoke present.
- Before removing the service plug, check the following:
  - Confirm with a thermal imaging camera that battery surface temperature, viewed from underneath the vehicle, is not more than 8-11 °C above surrounding ambient temperature. If a thermal imaging camera is not available, the service plug may be removed if no smoke is observed for 2 hours.
  - Confirm that there is no visible damage to the service plug.
- Do not store a vehicle inside a structure. Keep the vehicle away from any structures or other vehicles if the high-voltage battery is severely damaged. There is possibility of delayed fire from a severely damaged high-voltage battery.
- In the case of extinguishing a fire with water, large amounts of water from a fire hydrant (if possible) must be used. DO NOT extinguish fire with a small amount of water.
- Due to the possibility of re-ignition, after extinguishing the fire, use an infrared (IR) thermometer (non-contact thermometer) or similar device to confirm that the high-voltage battery temperature has dropped to the same level as or below the ambient temperature.

⚠CAUTION

In the event of a small fire, a Type ABC fire extinguisher may be used for an electrical fire caused by wiring harnesses, electrical components, etc. or oil fire.

Fire attack should follow standard fire fighting practices.

If you must walk away from the vehicle, notify an appropriate responder or a rescue person of the fact that the vehicle is an electric/hybrid vehicle and contains a high-voltage system and warn all others.

During overhaul operations (late stage fire suppression process to examine for remaining sources of heat), make sure the battery is fully cooled to avoid fire re-ignition. The battery could reignite. To avoid possible electrical shock and serious personal injury, do not breach the high-voltage battery case.

To prevent the spread of fire, it is recommended to cover the vehicle with a fire blanket.


IR
Risk of re-ignition!



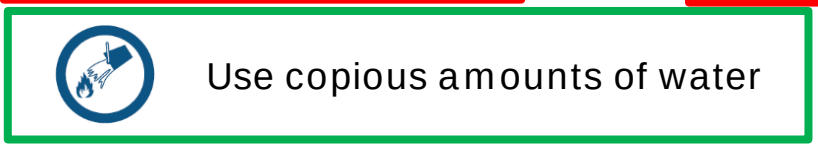
Use copious amounts of water

7. In Case of Submersion

7-1 Water Submersion

Even if a vehicle equipped with a high-voltage battery is partially or completely submerged, the vehicle body and high-voltage circuit are insulated, so there is no risk of electric shock from touching the vehicle.
Also, since the water and the vehicle are at the same potential, there is no risk of electric shock when entering the water.
However, if high-voltage components are exposed, there is a risk of electric shock.

⚠DANGER

- Damage level of submerged vehicle may not be apparent. Handling a submerged vehicle without appropriate Personal Protective Equipment (PPE) will result in serious injury or death from electrical shock.
- Do not touch damaged areas of high-voltage components or high-voltage harnesses, or exposed internal parts. If contact is unavoidable, wear appropriate insulating Personal Protective Equipment (PPE) and perform insulation treatment.
- If there is a possibility of damage to high-voltage components or high-voltage harnesses, or if the damage condition is unknown, always wear appropriate insulating Personal Protective Equipment (PPE).
- Submersion may cause the high-voltage battery to ignite. Use an infrared (IR) thermometer (non-contact thermometer) or similar device to monitor the temperature of the high-voltage battery.

⚠WARNING

- To avoid risk of death or personal injury the power switch of the submerged vehicle must be turned OFF first, if possible. Then the vehicle must be completely out of the water and drained to avoid electrical shock.
- Always wear appropriate Personal Protective Equipment (PPE) and remove/ drain water before removing the service plug when working on a vehicle after a fire or submersion to avoid electrical shock.

8. Towing / Transportation / Storage

8-1 Roadside Assistance

8-1.1 Jump Starting

To start the Hybrid e-POWER system with a booster battery, the instructions and precautions below must be followed.

⚠WARNING

If done incorrectly, jump starting can lead to a 12-volt battery explosion, resulting in severe personal injury or death. It could also damage your vehicle.

Discharged 12-volt battery may cause the following issues:

- The instrument cluster cannot be displayed while the power switch is turned ON. The start-up sound is not audible. (The electric/hybrid vehicle system cannot start.)
- The high-voltage battery cannot be charged.
- The vehicle cannot be shifted out of PARK normally.

⚠WARNING

- ⚠ To avoid risk of death or personal injury the high voltage battery cannot be jump started.
- Explosive hydrogen gas is always present in the vicinity of the 12-volt battery. Keep all sparks and flames away from the 12-volt battery.
- Do not allow battery fluid to come into contact with eyes, skin, clothing or painted surfaces. Battery fluid is a corrosive sulfuric acid solution that can cause severe burns. If the fluid comes into contact with anything, immediately flush the contacted area with water.
- The booster battery must be rated at 12 volts. Use of an improperly rated battery can damage the vehicle.
- Whenever working on or near a 12-volt battery, always wear suitable eye protectors (for example, goggles or industrial safety spectacles) and remove rings, metal bands, or any other jewelry. Do not lean over the 12-volt battery when jump starting.
- Do not attempt to jump start a frozen battery. It could explode and cause serious injury.
- ROGUE Hybrid e-POWER is equipped with an automatic cooling fan. It could come on at any time. Keep hands and other objects away from it.
- Always follow the jump starting instructions below. Failure to do so could result in damage to the charging system and cause personal injury.

⚠CAUTION

Do not use ROGUE Hybrid e-POWER to jump start another vehicle.

Jump Starting Procedures

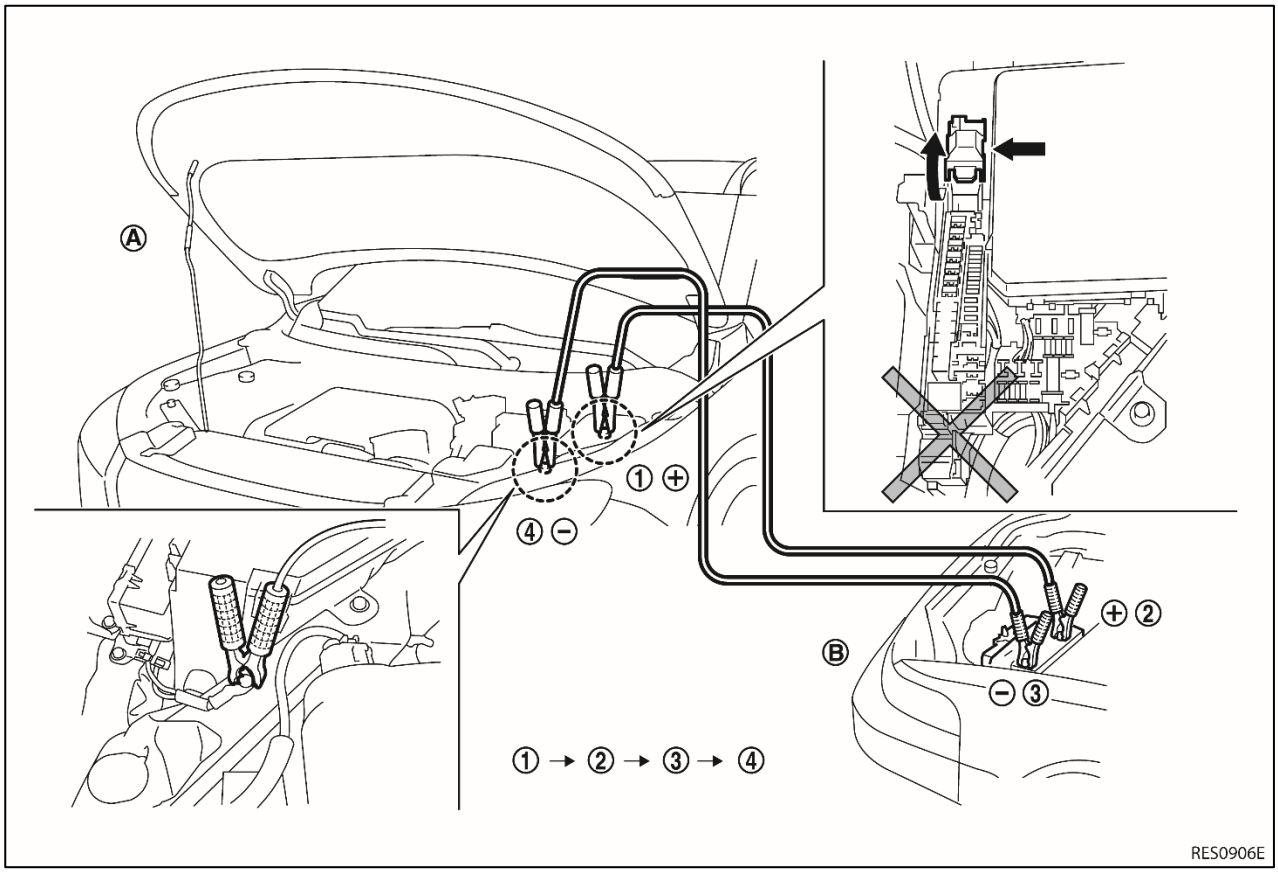

1. If the booster battery is in another vehicle (B), position the two vehicles (A and B) to bring their 12-volt batteries into close proximity to each other.

   DO NOT allow the two vehicles to touch.
2. Apply the parking brake.
3. Push the P (Park) button to engage the P (Park) position.
4. Switch off all unnecessary electrical systems (headlights, heater, air conditioner, etc.).
5. Remove the fuse box cover and open the inner cover.
6. Connect jumper cables in the sequence as illustrated (1 → 2 → 3 → 4).

⚠ CAUTION

- To avoid vehicle damage always connect positive (+) to positive (+) and negative (-) to body ground (for example, as illustrated), not to the 12-volt battery.
- Make sure the jumper cables do not touch moving parts in the motor compartment and that the cable clamps do not contact any other metal.

7. Start the engine of the booster vehicle (B) and let it run for a few minutes.
8. Keep the engine speed of the booster vehicle (B) at about 2,000 rpm, and start the Hybrid e-POWER system of the vehicle (A) being jump started.

⚠ CAUTION

- To avoid vehicle damage if the system does not start right away, push the power switch to the OFF position and wait at least 10 seconds before trying again.
- If the Hybrid e-POWER system cannot be started, stop the engine of the booster vehicle and place the power switch in the OFF position. Then, once open and close the driver's side door with the Intelligent Key in the vehicle, and keeping the door closed, wait for more than minutes without any other operations (navigation, audio, door lock, etc.). After that, repeat the steps from 6.

9. Check the vehicle information display to ensure the READY to drive indicator light is illuminated and the Hybrid e-POWER system warning light is not illuminated, then carefully disconnect the negative cable and the positive cable (4 → 3 → 2 → 1). If the Hybrid e-POWER system warning light is illuminated, turn off the power switch and open and close the driver's door with the jumper cables are connected, and wait for more than 3 minutes without doing anything. Then turn on the power switch again. Ensure the Hybrid e-POWER system warning light is not illuminated.

   NOTE:

   If it is not possible to turn the Hybrid e-POWER system ON by following this procedure, it is recommended you contact a NISSAN dealer immediately.

8-1.2 Electric Parking Brake Release Procedures

Releasing Electric Parking Brake Using Parking Brake Switch

If so equipped, the electric parking brake can be released by operating the parking brake switch shown below.

1. With the power switch in the ON position, depress the brake pedal and push the switch down (1). The indicator light (A) will turn off.

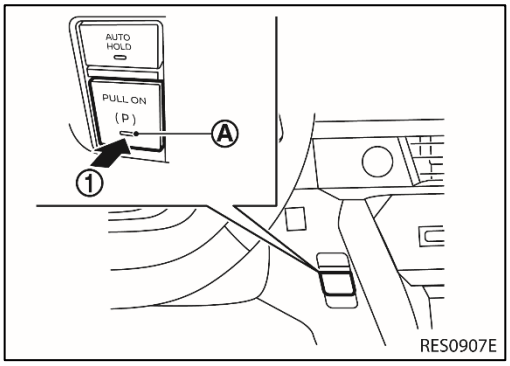

2. Check that the electric parking brake indicator light (Ⓟ or PARK) goes out.
3. If the electric parking brake indicator light remains illuminated or parking brake cannot be released, refer to Releasing Electric Parking Brake Where Parking Brake Switch Cannot Be Used, in this section.

Releasing Electric Parking Brake Where Parking Brake Switch Cannot Be Used

If the vehicle is equipped with electric parking brake and cannot be released using the parking brake switch, the following steps can be used to mechanically release the electric parking brake on each rear brake caliper assembly.

⚠WARNING

To avoid death or possible personal injury, or vehicle damage, use wheel chocks or take other appropriate safety measures to prevent fatal or serious injury accidents caused by the vehicle moving unexpectedly.

⚠WARNING

Never reuse the parking brake actuator. Doing so may cause brake system failure and possibly result in death or serious personal injury.

1. Disconnect the parking brake actuator harness connector (1) from the rear caliper assembly (2).

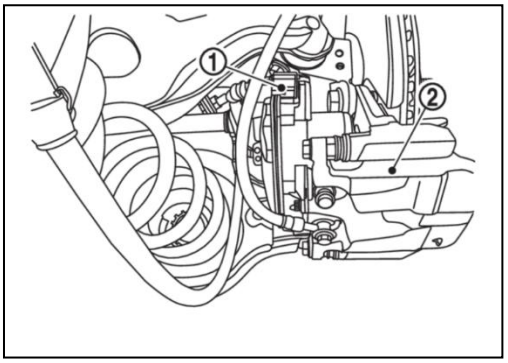

2. Remove the parking brake actuator (1) from the rear brake caliper assembly (2).

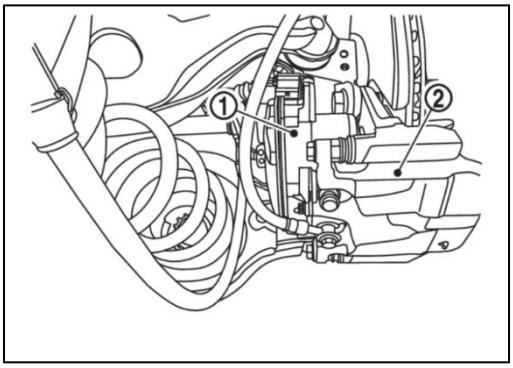

3. Rotate the rear brake caliper assembly (1) spindle part (A) clockwise to release the parking brake.

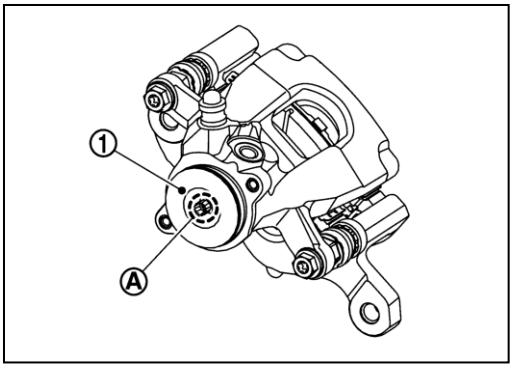

8-1.3 Neutral hold mode function (if equipped)

This function enables you to turn off the Hybrid e-POWER system with the vehicle in the "N" (Neutral) position. When using this function, release the parking brake.
If the neutral hold mode function is not equipped or can not be used, refer to 8-1.4 P (Park) Position Release Procedure, in this section.

⚠WARNING

Use this function on a level surface only. Failure to do so may cause the vehicle to move accidentally and could result in a collision or serious personal injury.

To activate the Neutral hold mode, perform the following operations.

1. Push the power switch to start the Hybrid e-POWER system.
2. Release the electronic parking brake and deactivate the automatic brake hold function and turn the e-Pedal system off.
3. Depress and hold the brake pedal through all steps listed below. Do not release it during the process to activate the Neutral hold mode.
4. Wait for 10 seconds without shifting or touching any shift buttons.
5. Push the P (Park) position button and confirm the shift position indicator indicates the P (Park) position.
6. Push the shift button to the N (Neutral) position and confirm the shift position indicator indicates the N (Neutral) position and then release the shift button.
7. Push the N (Neutral) position button again. The Neutral Hold Mode activated indicator appears in the vehicle information display when the Neutral hold mode function is activated.
8. Confirm that the electronic parking brake released.
9. Place the power switch in the "OFF" position. The Hybrid e-POWER system will turn off with holding the "N" (Neutral) position.

To exit the Neutral hold mode, place the vehicle in other than "N" (Neutral) position.

NOTE:

- It is necessary to perform the steps 5 through 7 within approximately 5 seconds.
- If the parking brake is not released, release the parking brake.
- If the e-Pedal system is activated, turn e-Pedal system off.
- When the power switch is placed in the "OFF" position while the shift position is in the "N" (Neutral) position, a message will appear in the vehicle information display.
- If the Neutral hold mode is unavailable, wait for a while without shifting operation and then perform the operations again.

8-1.4 P (Park) Position Release Procedure

If you need to release the vehicle from the P (Park) position, proceed as follows. When power switch is turned OFF, ROGUE Hybrid e-POWER automatically shifts to P position.

⚠WARNING

To avoid death or possible personal injury, or vehicle damage, use wheel chocks or take other appropriate safety measures to prevent fatal or serious injury accidents caused by the vehicle moving unexpectedly.

Be sure to firmly position wheel chocks before P (Park) position is released.

1. 12V electric power is supplied with booster cable to the 12V battery.

   NOTE:
   The vehicle may be able to move activating the neutral hold mode function after supplied 12 V electric power. To activate the neutral hold mode, refer to 8-1.3 Neutral hold mode function (if equipped).

2. Set the power switch to ON without depressing brake pedal.

⚠CAUTION

To avoid vehicle damage never set the vehicle to READY state.

3. Check that parking brake is activated. (Check that indicator lamp for parking brake is ON.)
4. Select N position.
   a. Depress brake pedal and shift to "N" position. After maintaining this status some time, check that shift position indicator is indicated to "N" position.

5. Open hood and remove fuse and fusible link block cover (1).

   NOTE:
   When the shift position is in N and the driver side door is opened, the shift position will automatically change to P. If the passenger side door is opened, the shift position will remain in N. Therefore, when working alone, exit the vehicle from a door other than the driver side door.

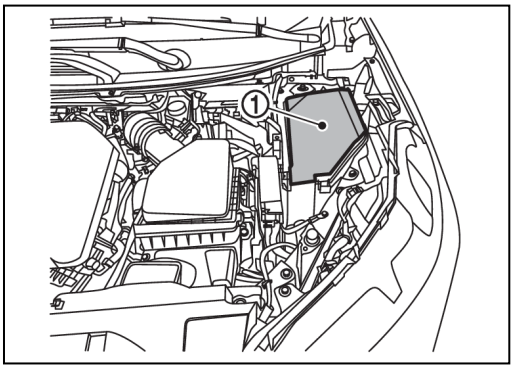

6. Remove 30A fuse (shown as SR MOTOR) (1).

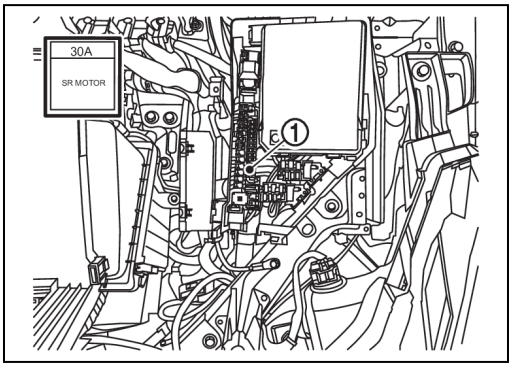

7. Release parking brake.

⚠WARNING

To avoid death or possible personal injury, or vehicle damage, use wheel chocks or take other appropriate safety measures to prevent fatal or serious injury accidents caused by the vehicle moving unexpectedly.

8. Set the power switch to OFF.
9. Remove booster cable from 12V battery.
10. Move the vehicle while power switch is OFF.

⚠WARNING

To avoid death or possible personal injury, or vehicle damage, use wheel chocks or take other appropriate safety measures to prevent fatal or serious injury accidents caused by the vehicle moving unexpectedly.

Be sure to firmly position wheel chocks when P (Park) position is manually released.

Reset Procedure

1. Disconnect the 12V battery cable from the negative terminal.
2. Install 30A fuse (shown as SR MOTOR).
3. Install fuse and fusible link block cover.
4. Connect the 12V battery cable to the negative terminal.
5. Wait for 5 seconds after set the power switch to ON and then push P position switch.
6. Set the power switch to OFF and wait for 5 seconds.

8-1.5 Towing

Vehicle Specifications

Length	183.1 in. (4,650 mm)
Width	72.8 in. (1,850 mm)
Overall Height	67.7 in. (1,720 mm)
Wheelbase	106.5 in. (2,705 mm)
Minimum Ground Clearance	8.4 - 8.5 in. (214 - 215 mm)
Overall Vehicle Weight	4066.0 - 4238.0 lbs. (1,844 - 1,922 kg) (Weight varies by equipment and trim level.)
Front Approach Angle	19.5°
Rear Departure Angle	24.1°

Towing Guidelines

Nissan strongly recommends that ROGUE Hybrid e-POWER be placed on a flatbed truck..

⚠ CAUTION

- To avoid vehicle damage never tow with the four (4) wheels on the ground.
- To avoid vehicle damage transport the vehicle only after turning the power switch OFF.
- To avoid vehicle damage safety chains or cables must be attached only to the main structural members of the vehicle.
- To avoid vehicle damage do not use the vehicle tie down hook to free a vehicle stuck in sand, snow, mud, etc.
- To avoid vehicle damage never tow a vehicle using the vehicle tie down hook.
- To avoid vehicle damage pulling devices should be routed so they do not touch any part of the suspension, steering, brake, high-voltage or cooling systems.
- To avoid vehicle damage pulling devices such as ropes or canvas straps are not recommended for use in vehicle towing or recovery.
- All applicable local and regional laws concerning towing operations must be followed.

NISSAN recommends that the vehicle be placed on a flatbed truck as illustrated:

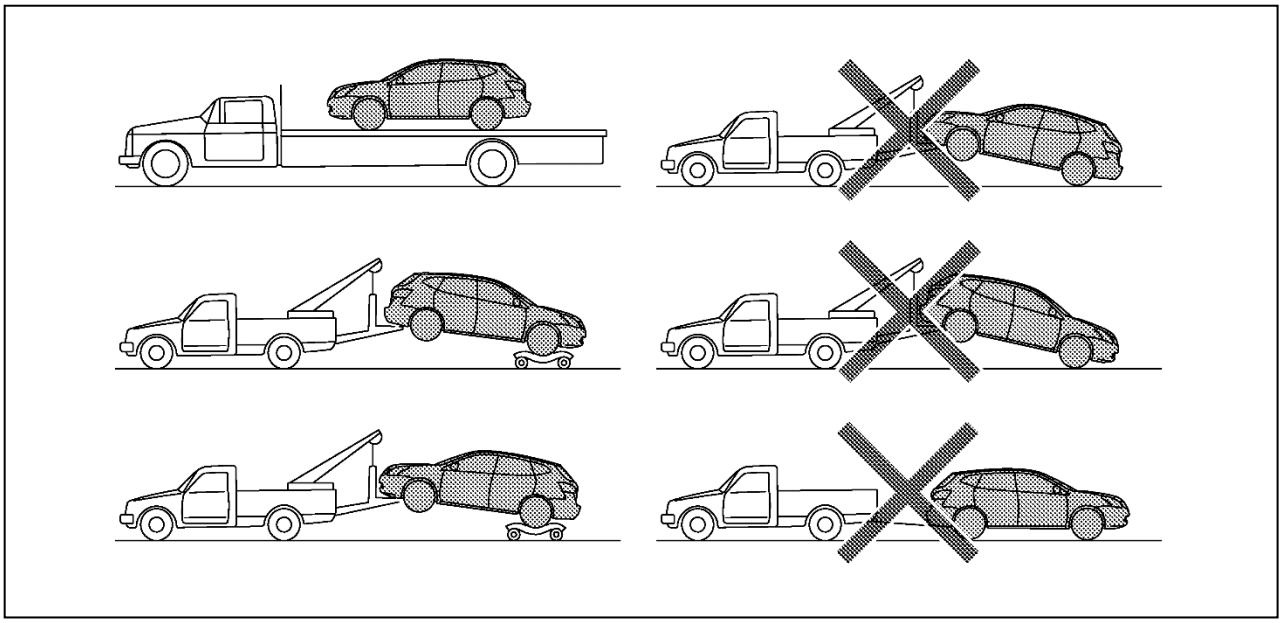



Risk of re-ignition!

⚠WARNING

Due to the potential for re-ignition, when storing the vehicle, keep a safe distance (more than 15 meters) from other vehicles to avoid death or serious injury.

NOTE:

It is also permissible to transport the Hybrid e-POWER vehicle facing rearward on a flatbed.

NOTE:
If the vehicle cannot be placed in Neutral, a P (Park) release procedure may be required. Refer to 8-1.4 P (Park) Position Release Procedure.

Use of Vehicle Equipped Hooks for Recovery Operations

If the vehicle is stuck in sand, snow, mud, etc., use a tow strap or other device designed specifically for vehicle recovery. Always follow the manufacturer's instructions for the recovery device.

⚠WARNING

To avoid vehicle damage, serious personal injury or death when recovering a stuck vehicle:

- Tow chains or cables must be attached only to the vehicle recovery hooks or main structural members of the vehicle. Otherwise, the vehicle body will be damaged.
- Use the recovery hooks to free a vehicle only. Never tow a vehicle using only the recovery hooks.
- Only use devices specifically designed for vehicle recovery and follow **the manufacturer's instructions.**
- Always pull the recovery device straight out from the front of the vehicle. Never pull at an angle.
- Route recovery devices so they do not touch any part of the vehicle except the attachment point.

Front:

- Do not use the front tie down hook for towing or vehicle recovery.

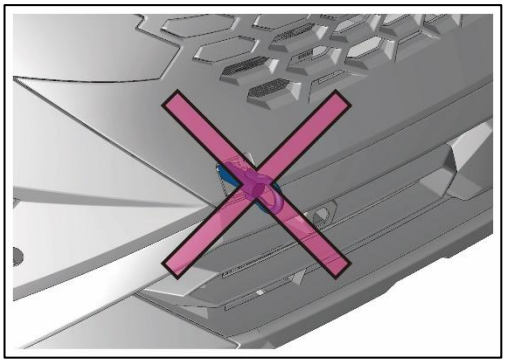

Rear:

- Do not use the rear tie down hook for towing or vehicle recovery.

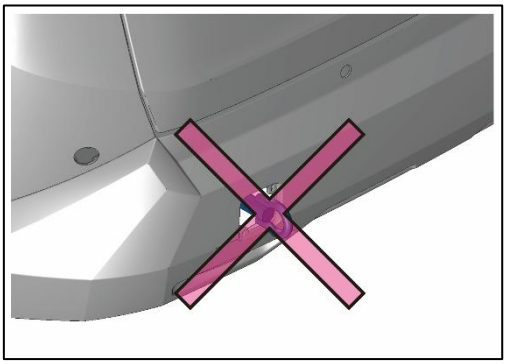

8-1.6 Storing the Vehicle

If ROGUE Hybrid e-POWER needs to be stored or left unattended, the high-voltage system must be shut down and a sign put on the vehicle indicating it is an electric vehicle with high-voltage dangers. Refer to 8-2 Storing the Vehicle.

8-1.7 Tools Installed In The Vehicle

The jack, jacking tools and the spare tire are stored in the storage in the luggage area.
The tools and spare tire are dealer options for this vehicle and may not be equipped.

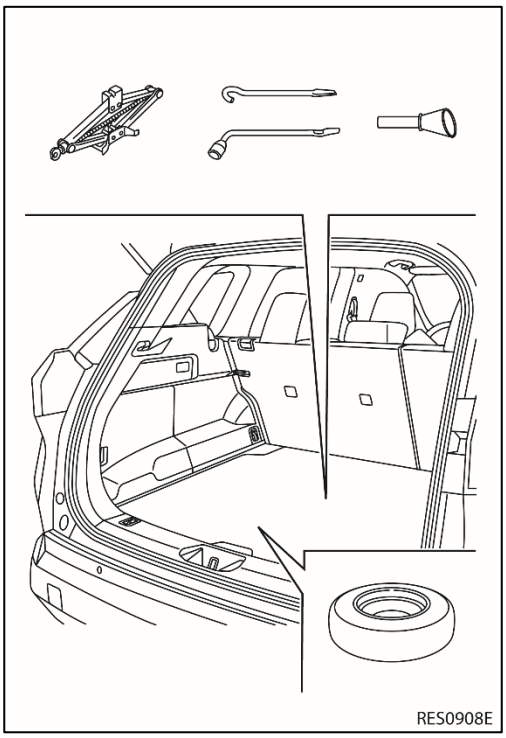

Spare tire

The spare tire and tools are located under the luggage board.
To access the storage area, remove the luggage board.
Remove the spare tire by removing the clamp holding it.

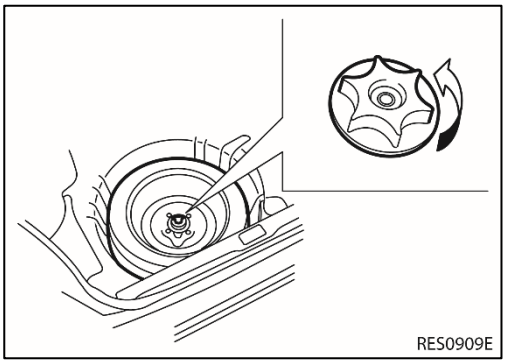

8-1.8 Jacking Up the Vehicle and Changing a Tire

The following jacking instructions apply when using the Nissan jack. (The tools and spare tire are dealer options for this vehicle and may not be equipped.)

1. Place the jack directly under the jack-up point as illustrated so the top of the jack contacts the vehicle at the jack-up point. Align the jack head between the two notches in the front or the rear as shown. Also fit the groove of the jack head between the notches as shown. The jack should be used on level firm ground.

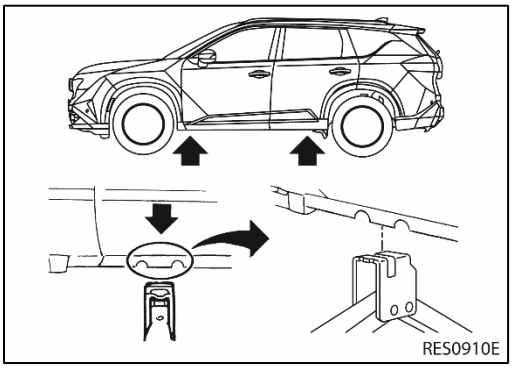

2. Loosen each wheel nut one or two turns by turning it counterclockwise with the wheel nut wrench. Do not remove the wheel nuts until the tire is off the ground.
3. Insert the jack rod end into the hole of the wheel nut wrench to form a handle. To lift the vehicle, securely hold the jack handle and rod with both hands as shown above. Carefully raise the vehicle until the tire clears the ground. Remove the wheel nuts, and then remove the tire.

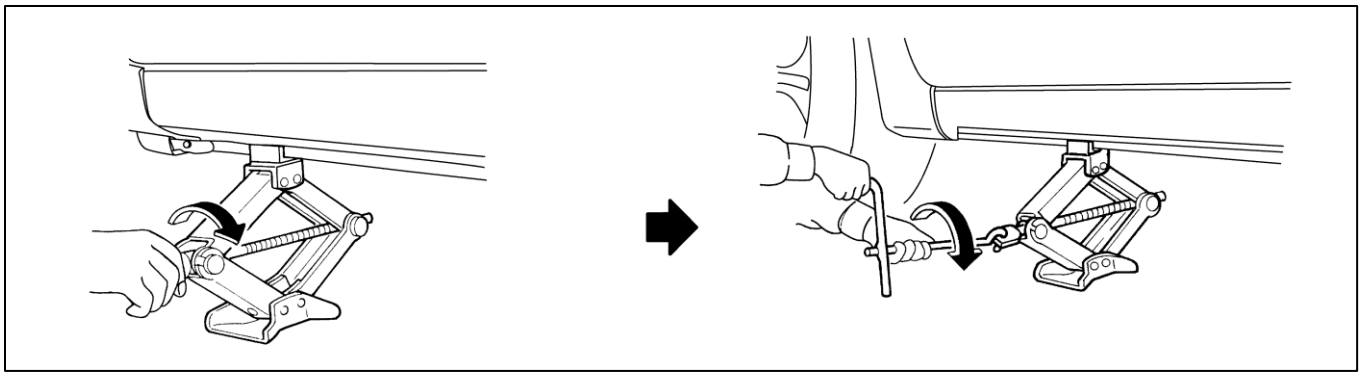

4. Install new or repaired tire and hand-tighten the wheel nuts with the wheel nut wrench in an alternating pattern.

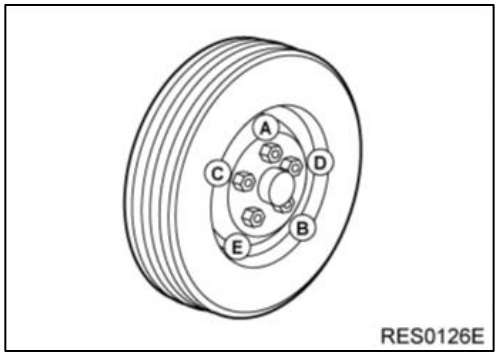

5. Securely torque the wheel nuts in an alternating pattern to 80 ft-lbs. (108 Nm).

8-1.9 Repairing a Flat Tire with Nissan Emergency Tire Puncture Repair Kit

This vehicle does not have a spare tire. The emergency tire puncture repair kit (Genuine NISSAN Emergency Tire Sealant) is supplied with the vehicle instead of a spare tire. It can be used to temporarily repair minor tire punctures.

⚠WARNING

- After using the Emergency Tire Sealant to repair a minor tire puncture, do not drive the vehicle at speeds faster than 50 MPH (80 km/h) to avoid risk of death or serious injury.
- Immediately after using Genuine NISSAN Emergency Tire Sealant to repair a minor tire puncture, take your vehicle to inspect, and repair or replace the tire. It is recommended you visit a NISSAN dealer for this service. The Genuine NISSAN Emergency Tire Sealant cannot permanently seal a punctured tire. Continuing operation of the vehicle without a permanent tire repair can lead to avoid risk of death or serious injury.
- If you used the Emergency Tire Sealant to repair a minor tire puncture, it is recommended you visit a NISSAN dealer to replace the TPMS sensor in addition to repairing or replacing the tire to avoid risk of death or serious injury.
- Nissan recommends using only NISSAN Genuine Emergency Tire Sealant provided with the vehicle. Other tire sealants may damage the valve stem seal which can cause the tire to lose air pressure to avoid risk of death or serious injury.
- Make sure the parking brake is applied to avoid risk of death or serious injury.
- Turn the power switch OFF while using the Emergency Tire Sealant to repair a flat tire to avoid risk of death or serious injury.
- Have all passengers get out of the vehicle and stand in a safe place away from traffic and clear of the vehicle to avoid risk of death or serious injury.
- Make sure the vehicle is located safely away from oncoming traffic and other hazards to avoid risk of death or serious injury.
- Observe the following precautions when using the tire repair compound:
  - Swallowing the compound is dangerous. Immediately drink as much water as possible and seek prompt medical assistance to avoid risk of death or serious injury.
  - Rinse well with lots of water if the compound comes into contact with skin or eyes. If irritation persists, seek prompt medical attention to avoid risk of death or serious injury.
  - Keep the repair compound out of the reach of children to avoid risk of death or serious injury.
  - The emergency repair compound may cause a malfunction of the tire pressure sensors and cause the low tire pressure warning light to illuminate. Have the tire pressure sensor replaced as soon as possible to avoid risk of death or serious injury.

⚠CAUTION

- To avoid vehicle damage the Emergency Tire Puncture Repair Kit from being damaged during storage or use:
  - To avoid vehicle damage only use the Emergency Tire Puncture Repair Kit on your vehicle. Do not use it on other vehicles.
  - To avoid vehicle damage only use the kit to inflate the tires of your vehicle and to check the **vehicle's** tire pressure.
  - To avoid vehicle damage only plug the compressor into a 12V DC car power point.
  - To avoid vehicle damage keep the kit free of dirt and water.
  - To avoid vehicle damage do not disassemble or modify the kit.
  - To avoid vehicle damage do not drop the kit or allow hard impacts to the kit.
- To avoid vehicle damage do not use the Emergency Tire Puncture Repair Kit under the following conditions. It is recommended you contact a NISSAN dealer or professional road assistance:
  - when the sealant has passed its expiration date (shown on the label attached to the bottle).
  - when the cut or the puncture in the tire is approximately 0.25 in (6 mm) or longer.
  - when the tire sidewall is damaged.
  - when the vehicle has been driven with extremely low tire pressure.
  - when the tire has come off the inside or the outside of the wheel.
  - when the wheel is damaged.
  - when two (2) or more tires are flat.

Take out the emergency tire puncture repair kit from the storage area under the luggage floor board. The repair kit consists of the following items:

(1). NISSAN Genuine Emergency Tire Sealant bottle

(2). Air compressor*

*: The compressor shape may differ depending on the models.

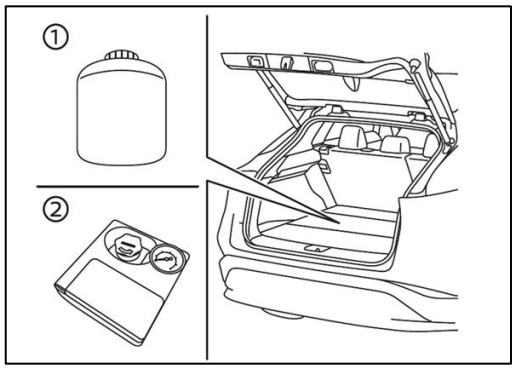

Before Using Emergency Tire Puncture Repair Kit

- If any foreign object (for example, a screw or nail) is embedded in the tire, do not remove it.
- Check the expiration date of the sealant (shown on the label attached to the bottle). Never use a sealant if the expiration date has passed.

Repairing the Tire

1. Take out the speed restriction sticker from the air compressor, then put it in a location where the driver can see it while driving.

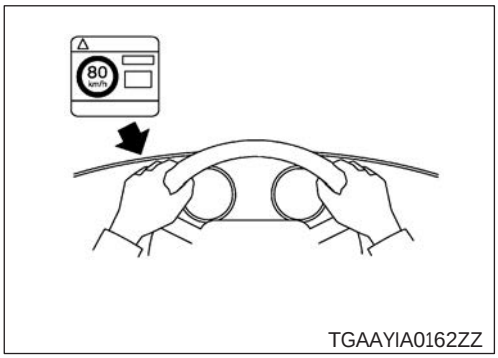

TGAAYIA0162ZZ

⚠CAUTION

To avoid vehicle damage do not put the speed restriction label on the steering wheel pad, the speedometer or the warning light locations.

2. Take the hose (1) and power plug (2) out of the air compressor. Remove the cap of the bottle holder from the air compressor.

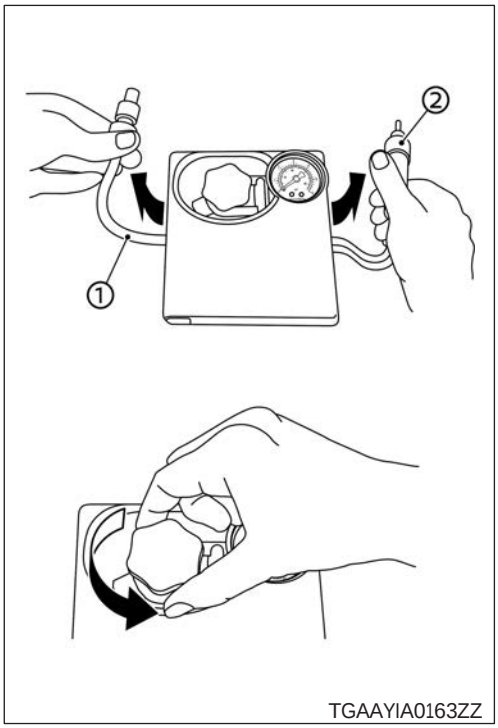

TGAAYIA0163ZZ

3. Remove the cap from the tire sealant bottle and screw the bottle clockwise onto the bottle holder. (Leave the bottle seal intact. Screwing the bottle onto the bottle holder will pierce the seal of the bottle.)

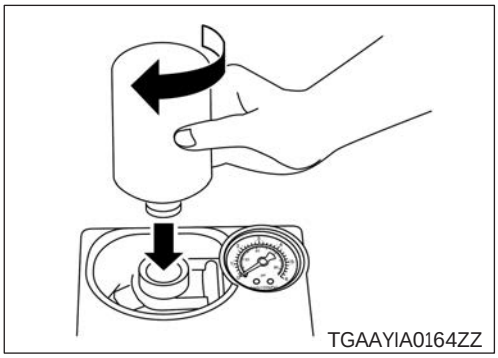
TGAAYIA0164ZZ

4. Remove the cap from the tire valve on the flat tire.
5. Remove the protective cap (A) of the hose and screw the hose securely onto the tire valve. Make sure that the pressure release valve (B) is securely tightened. Make sure that the air compressor switch is in the OFF (O) position and then insert the power plug into the power outlet in the vehicle.

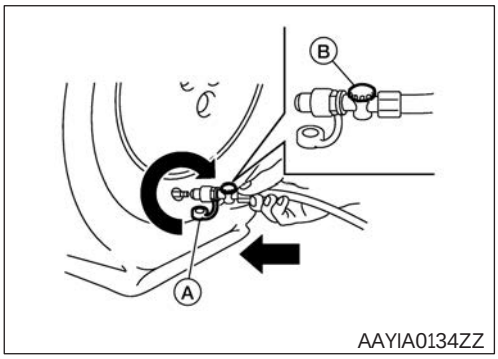

6. Place the power switch in the "ON" position.
7. Turn the air compressor switch to the ON (-) position and inflate the tire up to the pressure that is specified on the tire and loading information label affixed to the driver's side center pillar if possible or to the minimum of 26 psi (180 kPa). Turn the air compressor off briefly in order to check the tire pressure with the pressure gauge. If the tire is inflated to higher than the specified pressure, lower the tire pressure by releasing air with the pressure release valve.

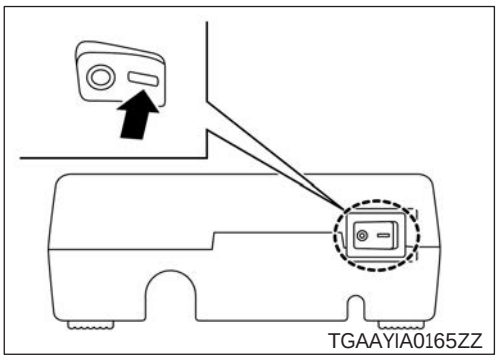

NOTE:

- There is a possibility that the pressure reaches 87 psi (600 kPa) while the tire is being inflated, but it is normal condition. Usually the pressure will drop in about 30 seconds.
- Do not operate the compressor for more than 10 minutes.

⚠WARNING

- To avoid serious personal injury while using the emergency tire puncture repair kit:
  - Securely tighten the compressor hose to the tire valve. Failure to do so can cause the sealant to spray into the air and get into your eyes or on your skin.
  - Do not stand directly beside the damaged tire while it is being inflated because of the risk of rupture. If there are any cracks or bumps in the tire, turn the compressor OFF immediately.

If the tire pressure does not increase to 26 psi (180 kPa) within ten (10) minutes, the tire may be seriously damaged and the tire cannot be repaired with this tire repair kit.

It is recommended you contact a NISSAN dealer.

8. When the tire pressure is at the specified amount, turn the air compressor OFF. If the tire cannot be inflated to the specified amount, the air compressor can be turned OFF at the minimum of 26 psi (180 kPa). Remove the power plug from the power outlet and quickly remove the hose from the tire valve. Attach the protective cap and the valve cap.

⚠WARNING

To avoid serious personal injury when stowing the emergency tire puncture repair kit keep the sealant bottle screwed into the compressor. Failure to do so can cause the sealant to spray into the air and get into your eyes or on your skin.

9. Immediately drive the vehicle for ten (10) minutes or 2 miles (3 km) at a speed below 50 MPH (80 km/h).
10. After driving, make sure the air compressor switch is in the OFF position. Then screw the hose securely onto the tire valve. Check the tire pressure with the pressure gauge. Temporary repair is completed if the tire pressure does not drop. Make sure the pressure is adjusted to the pressure specified on the tire and loading information label before driving.
11. If the tire pressure drops, repeat the steps from 5 to 10. If the pressure drops again or under 19 psi (130 kPa), the tire cannot be repaired with this tire repair kit. It is recommended you contact a NISSAN dealer.

⚠CAUTION

Do not reuse the tire sealant bottle or the hose. For a new tire sealant bottle and hose, it is recommended that you contact a NISSAN dealer.

After Repairing the Tire

It is recommended you visit a NISSAN dealer for tire repair/replacement as soon as possible.

⚠WARNING

- After using Emergency Tire Sealant to repair a minor puncture, do not drive the vehicle at speeds faster than 50 MPH (80 km/h) to avoid risk of death or serious injury.
- Immediately after using Emergency Tire Sealant to repair a minor tire puncture, it is recommended you take the vehicle to a NISSAN dealer to inspect and repair or replace the tire. The Emergency Tire Sealant cannot permanently seal a punctured tire. Continuing operation of the vehicle without a permanent tire repair can lead to a crash to avoid risk of death or serious injury.
- The Genuine NISSAN Emergency Tire Sealant or equivalent can be used for temporarily repairing a tire. Do not inject any other tire sealant into the tires, as this may cause a malfunction of the tire pressure sensors to avoid risk of death or serious injury.
- If you used the Emergency Tire Sealant to repair a minor tire puncture, it is recommended you visit a NISSAN dealer to replace the TPMS sensor in addition to repairing or replacing the tire to avoid risk of death or serious injury.
- Nissan recommends using only NISSAN Genuine Emergency Tire Sealant provided with the vehicle. Other tire sealants may damage the valve stem seal which can cause the tire to lose air pressure to avoid risk of death or serious injury.

8-2 Storing the Vehicle

- If the vehicle needs to be stored or left unattended, the high-voltage system must be shut down and a sign put on the vehicle indicating it is an electric/hybrid vehicle with high-voltage dangers.

⚠WARNING

- The service plug must be removed to shut down the high-voltage system for storage to avoid risk of death or serious injury.
- Do not store a vehicle inside a structure. Keep the vehicle away from any structures or other vehicles if the high-voltage battery is severely damaged. There is possibility of delayed fire from a severely damaged high-voltage battery to avoid risk of death or serious injury.
- Due to the potential for re-ignition, when storing the vehicle, keep a safe distance (more than 15 meters) from other vehicles to avoid death or serious injury.

- Drain gasoline, oil and other fluids, then disconnect the negative (-) terminal of the 12 V battery before storing a damaged vehicle.
- Submerged Vehicle: In addition to the normal procedures, remove the water from the vehicle.

⚠WARNING

- A vehicle that has been submerged in water poses a threat of vehicle fire after some time for possible short circuits due to electrical corrosion (wiring and circuit boards to corrode in an electrochemical reaction with water). To store a vehicle that has been submerged in water, choose a well-ventilated place at least 15 meters (49.2 feet) away from other objects to avoid risk of death or serious injury.
- To prevent a vehicle fire, avoid turning the ignition switch or power switch of a submerged vehicle to ACC or ON to avoid risk of death or serious injury.

⚠CAUTION

How to handle a vehicle post fire:

- Just like conventional vehicles, for fire safety reasons electric/hybrid vehicles that have been involved in accidents should be parked in a restricted-access section of an openair parking area a sufficient distance away from other vehicles, buildings, flammable objects and flammable surfaces to avoid vehicle damage.
- It is never recommended to park an electric/hybrid vehicle with a damaged high-voltage system in an enclosed hall to avoid vehicle damage.
- Alternatively, electric/hybrid vehicles involved in accidents may be parked in dedicated fire protection systems to avoid vehicle damage.
- Parked electric/hybrid vehicles involved in accidents, which have high-voltage components directly exposed to the weather, should be covered with a weatherproof tarpaulin to avoid vehicle damage.
- The vehicle should be marked accordingly, especially if it is to be delivered outside business hours to avoid vehicle damage.

8-2.1 Danger Sign Example

If Hybrid e-POWER vehicle needs to be stored or left unattended, the high-voltage system must be shut down by removing the service plug (refer to 3-1.5 Alternate Procedure 2 (Remove Service Plug)), and a sign put on the vehicle indicating it is an electric/hybrid vehicle with high-voltage dangers. For example:

Person in charge:_____

DANGER:
HIGH VOLTAGE REPAIR
IN PROGRESS.
DO NOT TOUCH!

DANGER:
HIGH VOLTAGE REPAIR
IN PROGRESS.
DO NOT TOUCH!

Person in charge:_____

Copy this page and put it after folding on the roof of the vehicle in service.

AAYIA0020GB

8-2.2 Preparation Items

For items to be prepared when storing the vehicle, as well as for the management and inspection of protective equipment to be used and insulated tools, refer to 2-2 Preparation Items.

8-2.3 Removing the Service Plug

If ROGUE Hybrid e-POWER needs to be stored or left unattended, the high-voltage system must be shut down by removing the service plug. Refer to 3-1.5 Alternate Procedure 2 (Remove Service Plug) for the procedure.

8-3 Preparation for Dismantling

⚠ DANGER

- ⚠ Failure to properly shut down the high-voltage electrical system before the Dismantling Procedures are performed will result in serious injury or death from electrical shock. To prevent serious injury or death, NEVER touch high-voltage harnesses or components without always wearing appropriate Personal Protective Equipment (PPE).
- ⚠ If it is necessary to touch any of the high-voltage harnesses or components you must always wear appropriate PPE to avoid electrical shock. Shut down the high-voltage system by following the steps outlined in 3-1.5 Alternate Procedure 2 (Remove Service Plug). Wait at least ten (10) minutes for complete discharge of the high-voltage capacitor after the high-voltage system has been shut down.

⚠ WARNING

- ⚠ NEVER assume the Hybrid e-POWER is shut OFF simply because it is quiet to avoid risk of death or serious injury.
- ⚠ If it becomes necessary for the dismantler to leave the vehicle, place a **"DANGER" sign (for example, refer to** 8-2.1 Danger Sign Example) on the vehicle to alert other people that the vehicle contains a high-voltage battery to avoid risk of death or serious injury.
- ⚠ If the READY to drive indicator is ON, the high-voltage system is active.
- ⚠ If possible, be sure to verify that the READY to drive indicator on the instrument cluster is OFF and the high-voltage system is stopped to avoid risk of death or serious injury.

NOTE:
We strongly advise to bring the vehicle to a Nissan Service Center for battery dismantling and discharging.

DANGER

To avoid death or serious injury do not perform this procedure if the high-voltage battery is damaged. If you are unsure of battery damage, use extreme caution and always wear appropriate Personal Protective Equipment (PPE) when working on high-voltage components.

High-voltage battery discharging must take place before dismantling. Sufficient discharging can be achieved by following these steps.

1. Push the P (Park) button to engage the P (Park) position.
2. Apply the parking brake.
3. Set wheel chocks to ensure the vehicle is completely immobilized.
4. Close the driver's door, and while depressing the brake pedal, turn the power switch to the ON position. Confirm that the READY to drive indicator illuminates.

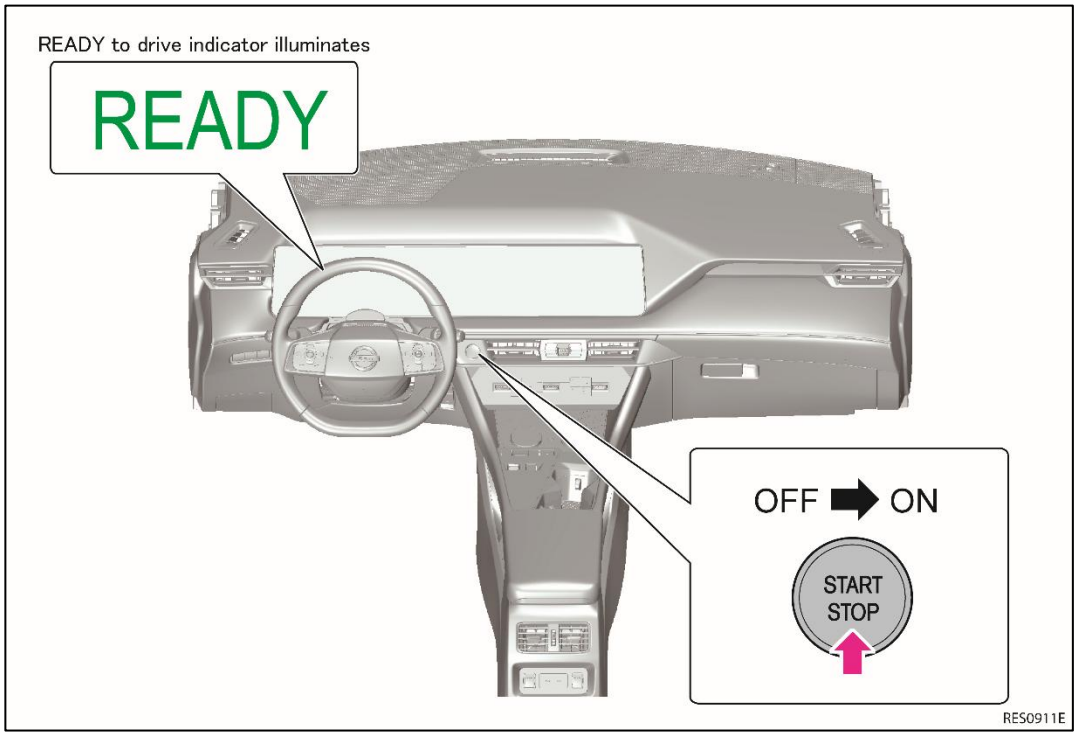

5. Turn ON all auxiliary equipment (front wiper, rear wiper, high beam, hazard lamps, and air conditioner).

6. When the battery meter display drops below 1 segment, turn the power switch OFF and confirm that the READY to drive indicator turns off. If it is not turned OFF, the battery will begin charging.

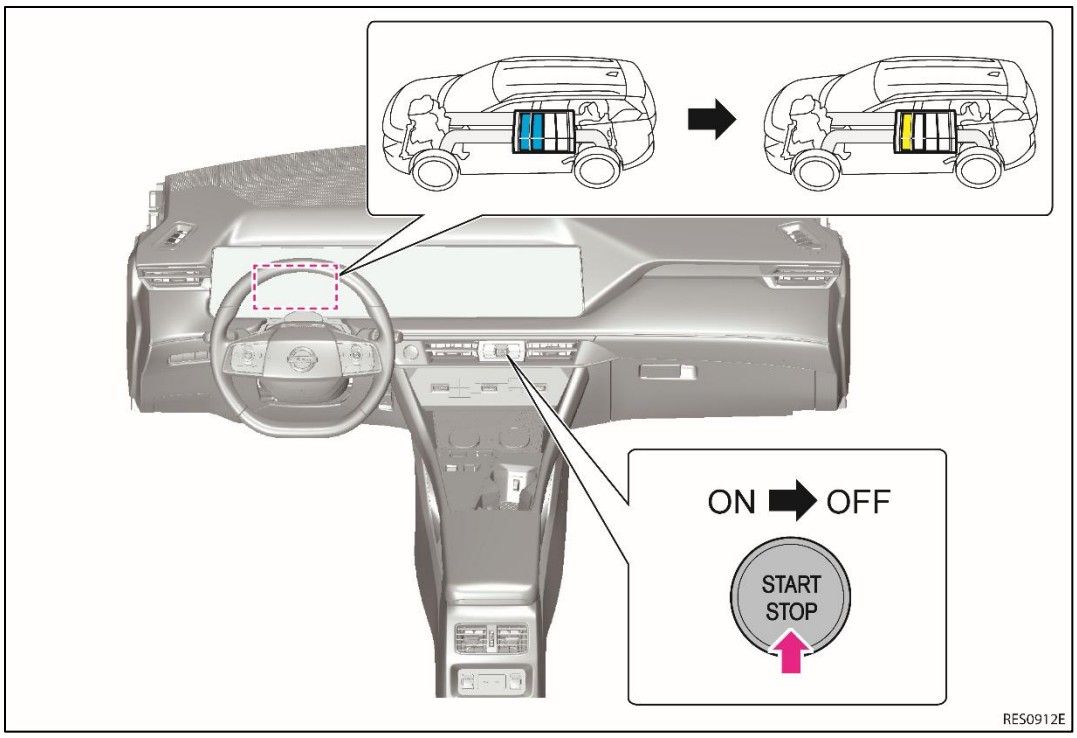

8-3.2 Preparation Items

For items to be prepared when storing the vehicle, as well as for the management and inspection of protective equipment to be used and insulated tools, refer to 2-2 Preparation Items.

8-3.3 High-voltage System Shut-Down Procedures

Once the high-voltage battery is properly discharged, any of the following procedures can shut down and isolate the high-voltage system. The dismantling operation can only begin after shutting down the high-voltage system. If the vehicle is heavily damaged, for example the high-voltage battery is deformed, broken or cracked, appropriate Personal Protective Equipment (PPE) must always be used and the high-voltage battery and high-voltage components must not be touched.

⚠ DANGER

- ⚠ Failure to properly shut down the high-voltage system before the dismantling procedures are performed will result in serious injury or death from electrical shock. To prevent serious injury or death, NEVER touch high-voltage harnesses or components without always wearing appropriate Personal Protective Equipment (PPE). PPE must always be worn when touching or working on high-voltage components
- ⚠ When contact with high-voltage components or high-voltage harnesses is unavoidable, or when there is risk of such contact, you must always wear appropriate PPE. PPE must always be worn when touching or working on high- voltage components.

⚠WARNING

- ⚠ To avoid the risk of death or serious injury, persons wearing a pacemaker or other medical device must not perform work on the vehicle. The vehicle contains parts that contain powerful magnets. If a person wearing a pacemaker or other medical device gets close to these parts, the medical device may be affected by the magnets.
- To avoid the risk of death or serious injury be sure to verify that the READY indicator is off and the high-voltage system is stopped.
- To avoid the risk of death or serious injury after the high-voltage system is shut down, please wait at least ten (10) minutes for complete discharge of the high-voltage capacitor. While waiting, do not operate any vehicle functions.
- To avoid the risk of death or serious injury after shutting down the high-voltage system and removing the 12-volt battery negative (-) terminal, wait at least three (3) minutes to discharge the air bag capacitor. Even though the 12-volt battery negative (-) is disconnected, the Supplemental Restraint System (SRS) air bag maintains voltage at least three (3) minutes. During this time, there is a possibility of sudden SRS air bag inflation due to harness short circuit or damage and it may cause serious injuries.
- To avoid the risk of death or serious injury always shut down the high-voltage system before disconnecting the 12-volt battery. Not doing so may result in serious injury or death from electrical shock.
- The 12V system will remain active even after the 12-volt battery negative (-) terminal is removed while the high-voltage system is active. The high-voltage system is active during any of the following conditions:
    - READY to drive indicator is turned ON
    - For 7 minutes after the power switch is pressed once to turn the vehicle from READY to OFF

Refer to 1-1.2 Interior Component Location for location of these indicators. This is because DC/DC converter will not shut down and power will be supplied to the 12V system and high-voltage system continuously.

Powering Down the High-voltage System

The high-voltage system can be shut down with any 1 of the following procedures:

- Turn OFF the power switch and disconnect the 12-volt battery. Refer to 3-1.3 Primary Procedure.
- When the power switch cannot be operated due to vehicle damage. Refer to 3-1.4 Alternate Procedure 1 (Cable cut) .
- Remove the service plug and disconnect the 12-volt battery. Refer to 3-1.5 Alternate Procedure 2 (Remove Service Plug) .

.

8-4 Dismantling Information

Removal or repair of the high-voltage battery requires special tools and specific training. Nissan strongly recommends that only NISSAN dealer technicians perform these operations.

8-4.1 Precautions for Handling High-voltage Battery

⚠ DANGER

- ⚠ To avoid death or serious injury because ROGUE Hybrid e-POWER contains a high-voltage battery, there is the risk of electric shock, electric leakage, or similar accidents if the high-voltage components or vehicle is handled incorrectly. Be sure to follow the correct work procedures when performing inspection and dismantling.
- ⚠ To avoid death or serious injury if it is necessary to touch any of the high-voltage harnesses or components you must always wear appropriate Personal Protective Equipment (PPE) and properly shut-down the high-voltage system by removing the service plug.
- ⚠ To avoid death or serious injury be sure to always wear appropriate PPE before beginning work on the high- voltage system.
- ⚠ To avoid death or serious injury be sure to remove the service plug in order to shut-down the high-voltage system before performing inspection or dismantling of high-voltage system harnesses and parts.
- ⚠ To avoid death or serious injury if the vehicle is heavily damaged, for example the high-voltage battery is deformed, broken, or cracked; appropriate PPE must always be used at all times to avoid electrical shock.

- ⚠ The colors of the high-voltage harnesses and connectors are all orange. Orange "High-voltage" labels are applied to the high-voltage battery and other high- voltage devices. To avoid death or serious injury do not touch the high-voltage battery or other high-voltage devices without always wearing appropriate PPE.
- ⚠ To avoid death or serious injury clearly identify the persons responsible for high-voltage work and ensure that other persons do not touch the vehicle. When not working, cover high-voltage parts with an insulating cover sheet and sign or similar item to prevent other persons from contacting them.
- ⚠ To avoid death or serious injury be sure to put the removed service plug in your pocket and carry it with you so another person does not accidentally reinstall it while work is in progress.
- ⚠ The high-voltage battery retains high-voltage at all times. Personal Protective Equipment (PPE) must always be worn when touching or working on high- voltage components to avoid risk of electrical shock and death or serious injury.
- ⚠ To avoid death or serious injury immediately insulate disconnected high-voltage connectors and terminals with insulated tape.
- ⚠ To avoid death or serious injury, persons wearing a pacemaker or other medical device must not perform work on the vehicle. The vehicle contains parts that contain powerful magnets. If a person wearing a pacemaker or other medical device gets close to these parts, the medical device may be affected by the magnets.
- ⚠ To avoid death or serious injury because this vehicle uses components that contain high-voltage and powerful magnetism, do not carry any metal products which may cause short circuits, or any magnetic media (cash cards, credit cards, etc.) which may be damaged when working on the vehicle.
- ⚠ To avoid death or serious injury keep removed high-voltage battery packs away from rain to avoid electric shock.
- To avoid death or serious injury do not heat removed battery packs higher than 158° F (70° C).

⚠ CAUTION

There is the possibility of a malfunction occurring if the vehicle is changed to READY status while the service plug is removed.

8-4.2 High-voltage Battery Pack Removal

Exploded View: High-voltage battery

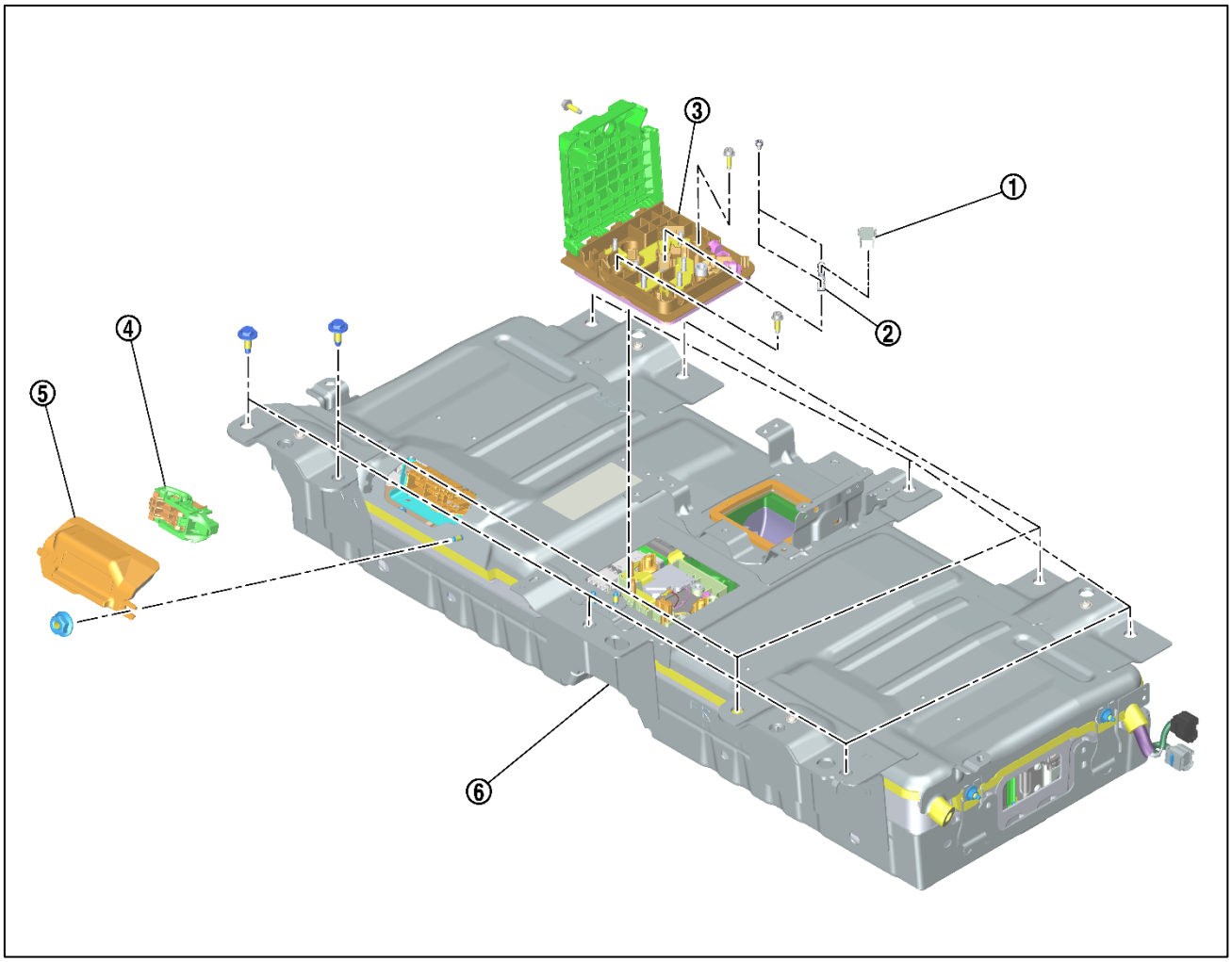

1. Sub fuse cover	2. Sub fuse	3. Terminal block assembly
4. Service plug	5. Service plug terminal cover	6. High-voltage battery

Exploded View: Seat cushion cross member

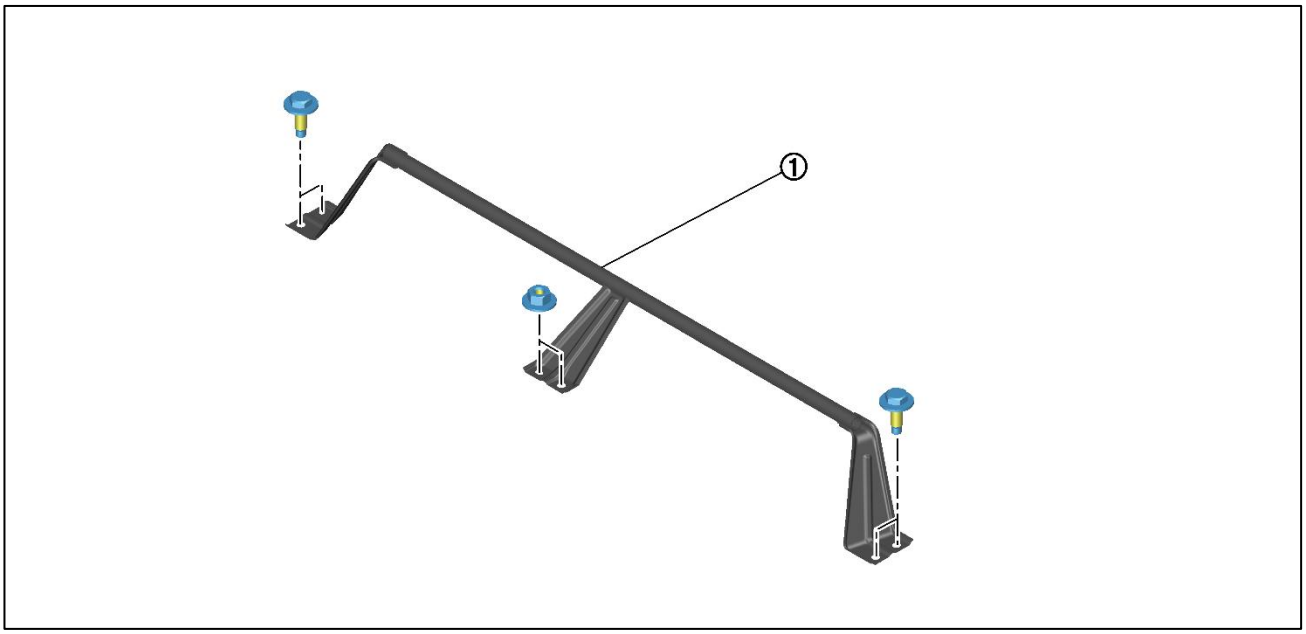

1. Seat cushion cross member

Exploded View: Body side trim

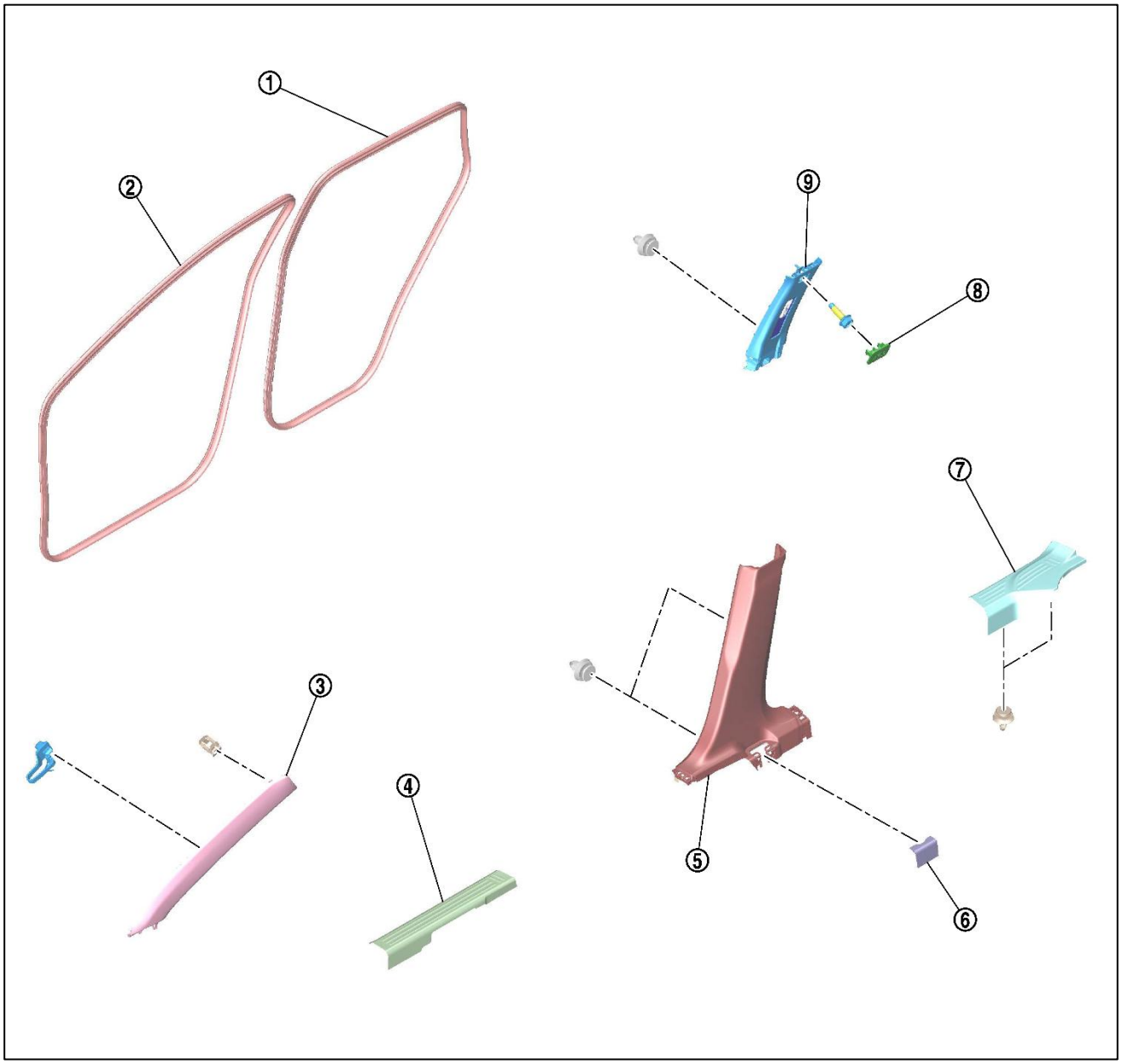

1.	Rear body side welt	2.	Front body side welt	3.	Front pillar garnish
4.	Front kicking plate	5.	Center pillar lower garnish	6.	Seat belt cover
7.	Rear kicking plate	8.	Bolt cap	9.	Center pillar upper garnish

Exploded View: Center console assembly

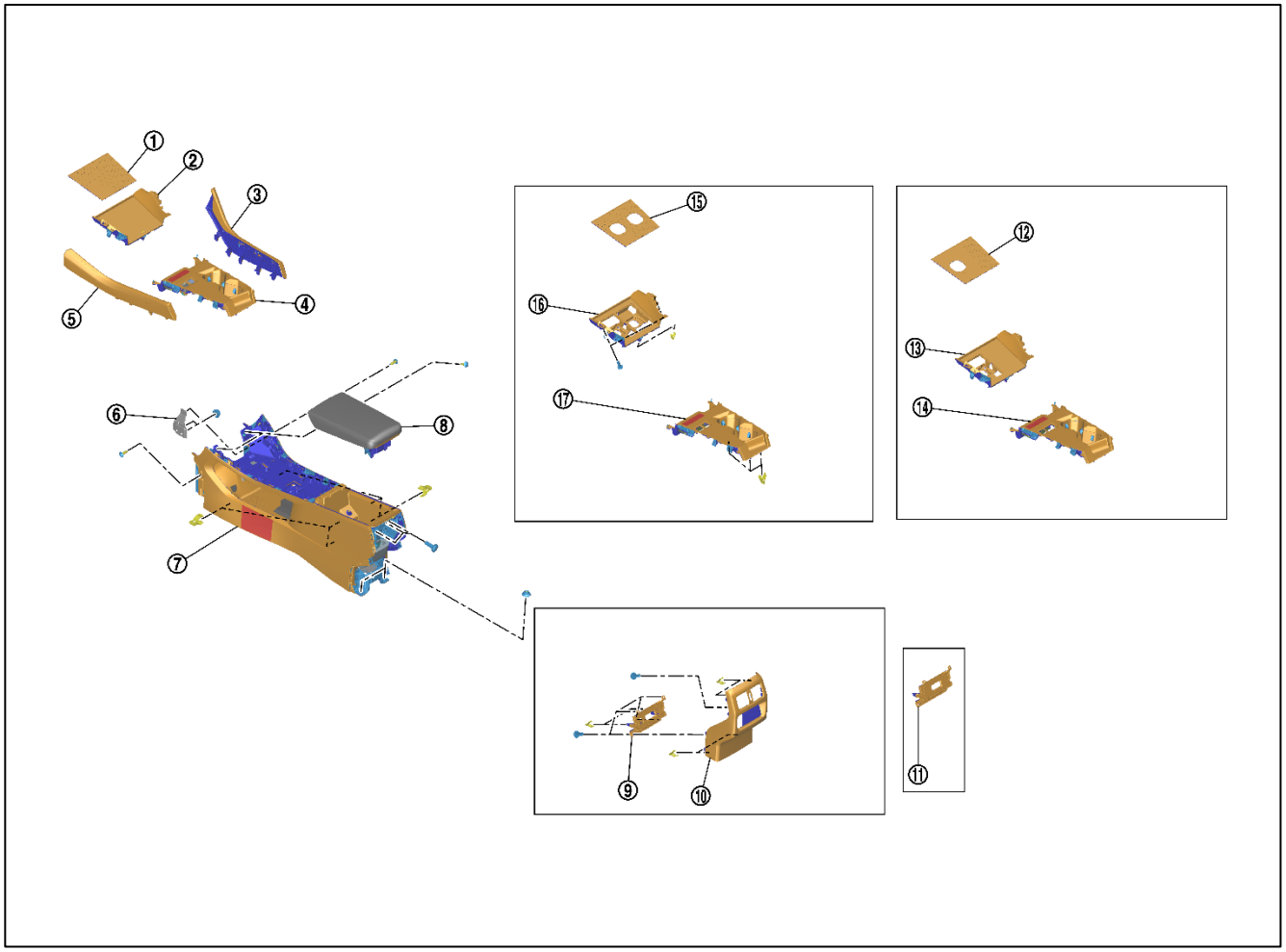

1.	Console finisher tray mat[*1]	2.	Console finisher upper[*1]	3.	Panel console RH
4.	Console finisher assembly[*1]	5.	Panel console LH	6.	Panel console bracket
7.	Center console assembly	8.	Console lid	9.	Switch bracket[*2]
10.	Console rear finisher	11.	Switch bracket[*3]	12.	Console finisher tray mat[*4]
13.	Console finisher upper[*4]	14.	Console finisher assembly[*4]	15.	Console finisher tray mat [*5]
16.	Console finisher upper[*5]	17.	Console finisher assembly[*5]		

*1: Without wireless charger unit

*2: With heater seat switch

*3: Without heater seat switch

*4: With wireless charger unit

*5: With double wireless charger unit

Exploded View: Floor trim

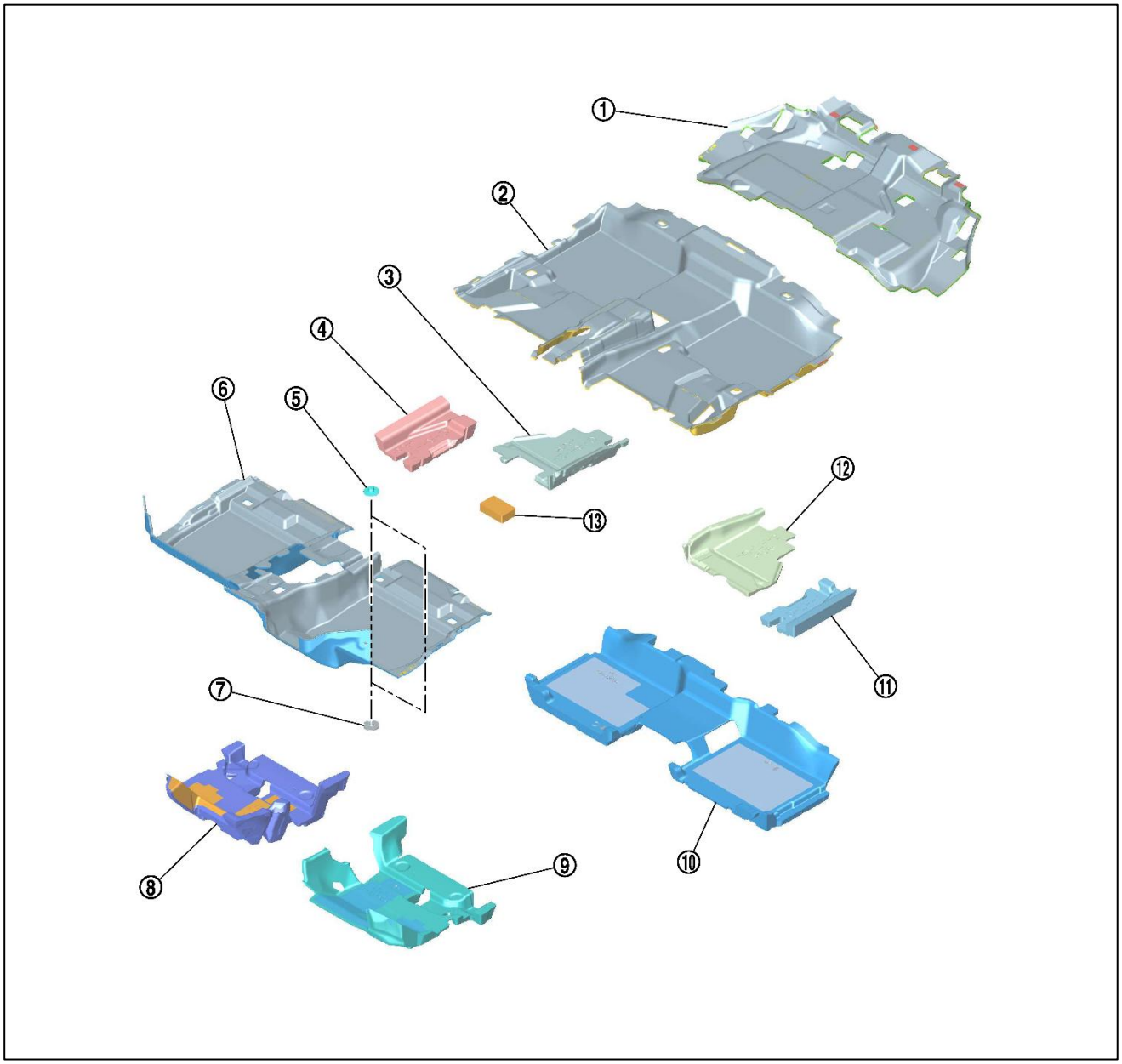

1. Rear floor carpet
2. Center floor carpet
3. Center floor spacer 2 RH
4. Center floor spacer 1 RH
5. Carpet hook
6. Front floor carpet
7. Base
8. Front floor spacer RH
9. Front floor spacer LH
10. Rear floor spacer
11. Center floor spacer 1 LH
12. Center floor spacer 2 LH
13. Floor side spacer RH

Exploded View: DC/DC converter

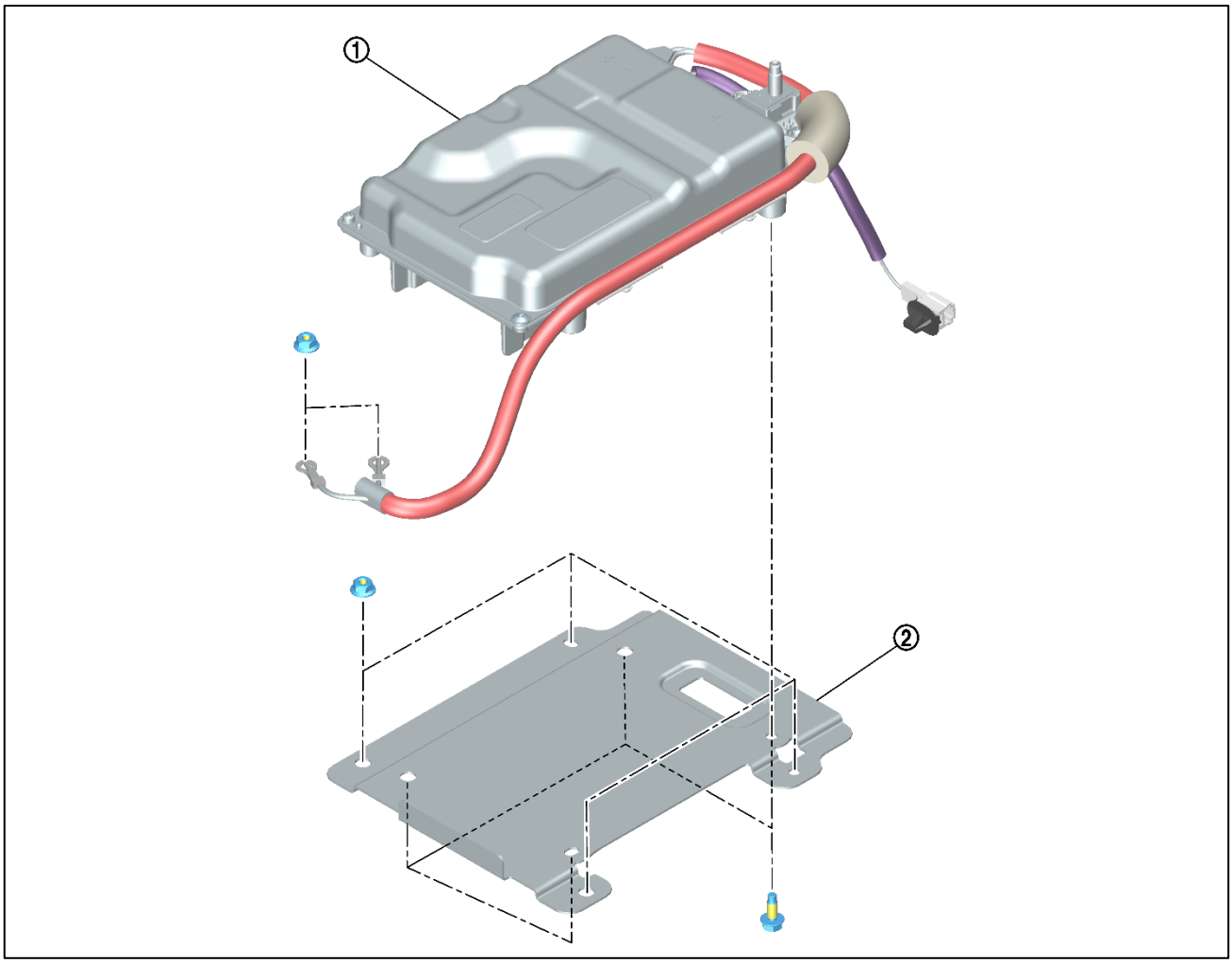

1. DC/DC converter
2. DC/DC converter bracket lower

Exploded View: High-voltage battery cooling system

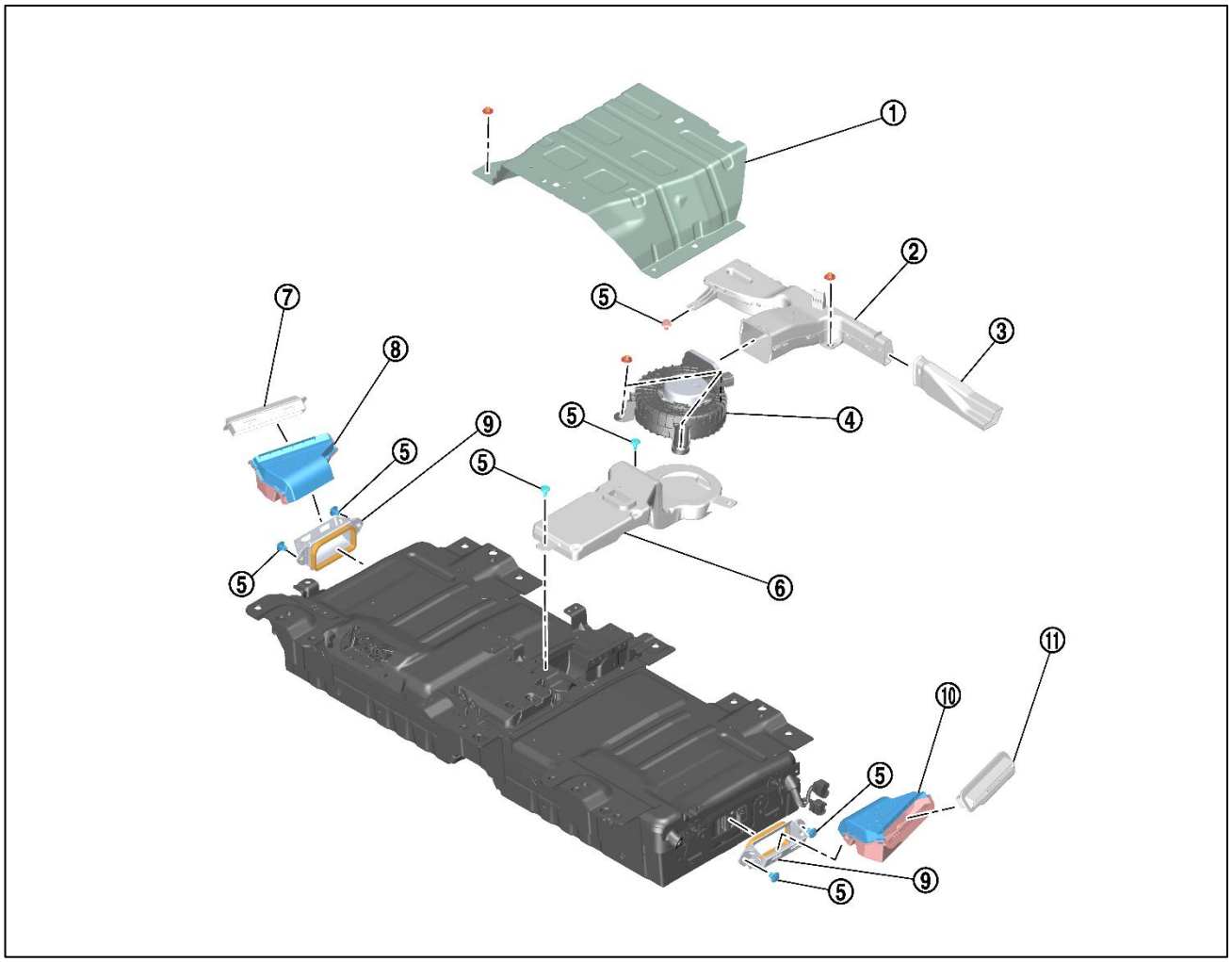

1.	Battery cooling fan protector	2.	Air duct 1	3.	Air duct 2
4.	Battery cooling fan	5.	Clip	6.	Battery cooler outlet duct
7.	Battery cooler inlet grille RH	8.	Battery cooler inlet duct RH	9.	Battery air duct
10.	Battery cooler inlet duct LH	11.	Battery cooler inlet grille LH		

Removal

DANGER

NEVER disassemble or open the high-voltage battery to avoid severe personal injury or death by electrical shock.

1. Discharge the high-voltage battery. Refer to 8-3.1 Discharging Procedures .
2. Remove front seat headrest.
3. Slide front seat to frontmost position.
4. Remove rear side mounting bolts (A) of front seat assembly.



5. Slide front seat to rearmost position.
6. Remove front side mounting bolts (A) of front seat assembly.

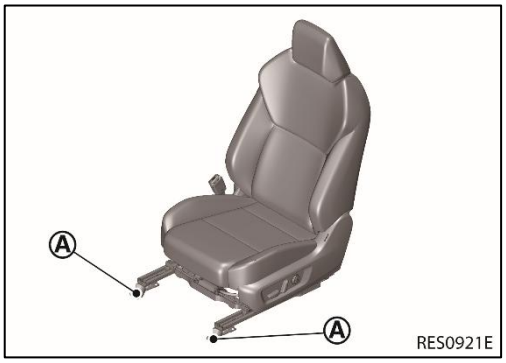

7. Pull up front seat assembly to rearward.
8. Disengage body harness fixing clips, and then disconnect harness connectors.
9. Remove front seat assembly from vehicle.

10. Remove rear seat cushion assembly.

a. Lift up seat cushion assembly at a close position (A) of engaging portion (B), and then disengage seat cushion hooks.

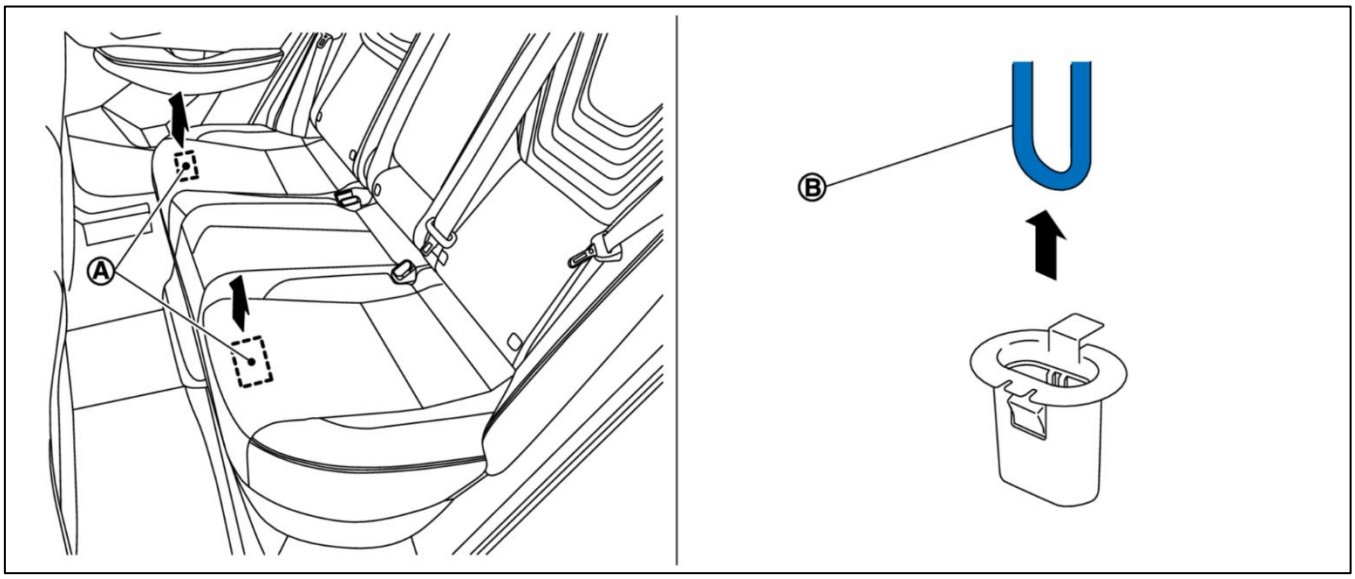

b. Disengage seat cushion assembly fixing portion (A).

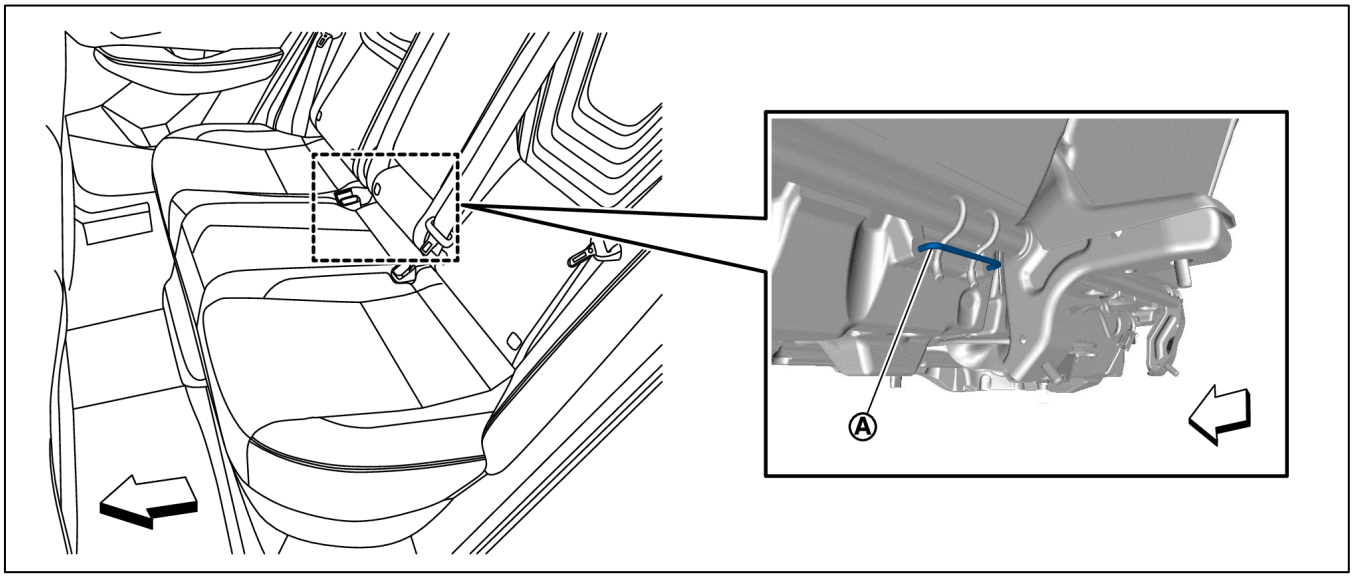

: Vehicle front

c. Pull out seatbelt buckles while pulling up seat cushion assembly.

d. Disengage harness fixing clips of seat cushion, and then disconnect harness connectors (with seat heater).

e. Remove seat cushion assembly from vehicle.

11. Disengage fixing pawls while roll up floor carpet, and then remove seat cushion hooks.

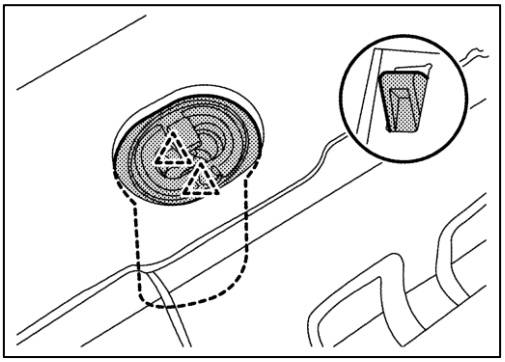

: Pawl

12. Remove seat cushion cross member. Refer to Exploded View: Seat cushion cross member.
13. Remove center pillar lower garnish (LH and RH). Refer to Exploded View: Body side trim.
14. Remove center console assembly. Refer to Exploded View: Center console assembly
15. Remove center floor carpet. Refer to Exploded View: Froor trim.
16. Disconnect 12V battery negative terminals. Refer to 3-1.3 Primary Procedure.
17. Remove DC/DC converter. Refer to Exploded View: DC/DC Converter.

⚠WARNING

To avoid death or serious injury be sure to wear insulated protective wear.

18. Remove battery cooler outlet duct. Refer to Exploded View: High-voltage battery cooling system.

19. Remove high voltage harness mounting nut (A).

⚠WARNING

To avoid death or serious injury be sure to wear insulated protective wear.

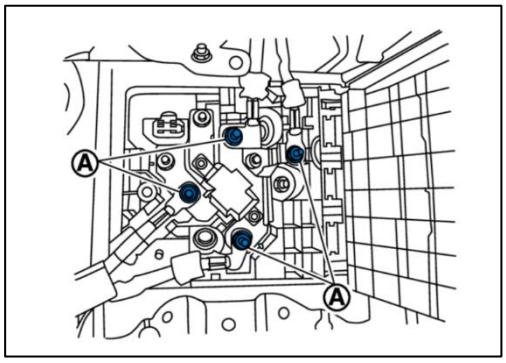

20. Disconnect harness connector (A).

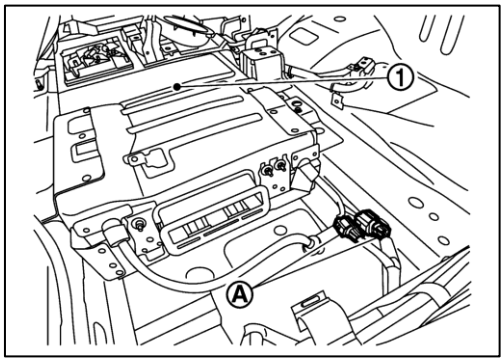

① : Li-ion battery assembly

21. Disconnect harness connector (A).

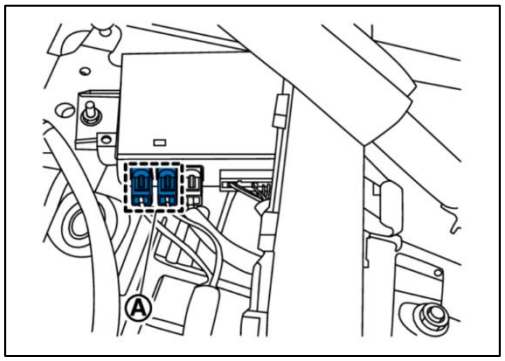

22. Remove bolts (A) of Li-ion battery assembly .

⚠WARNING

To avoid death or serious injury be sure to wear insulated protective wear.

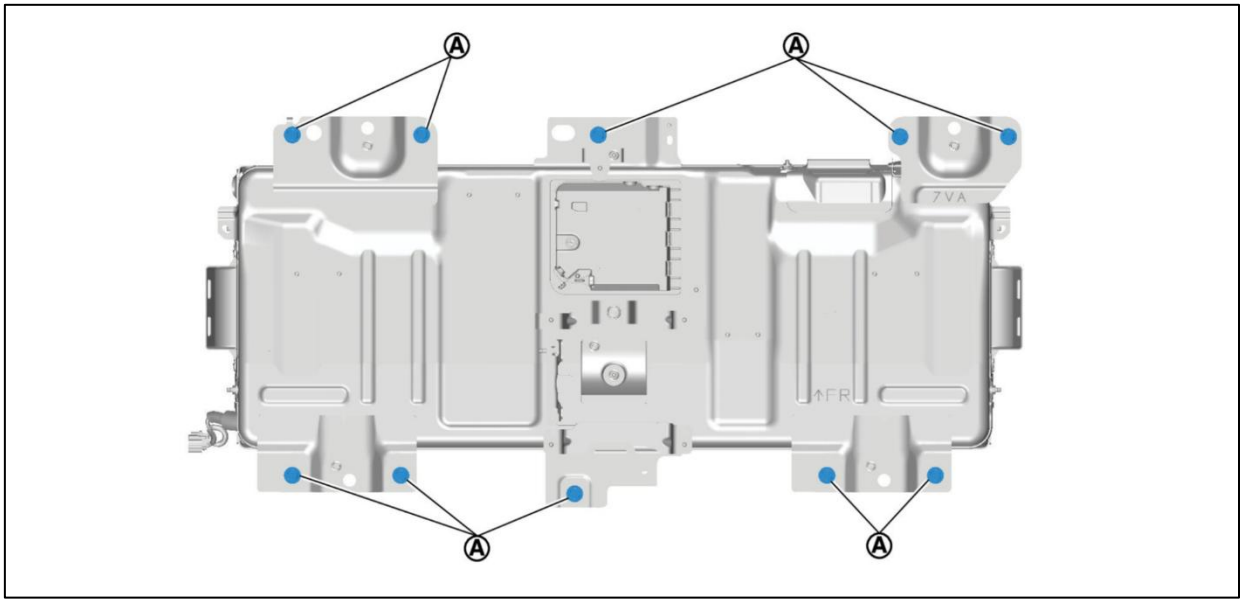

23. Remove Li-ion battery assembly from inside the vehicle, as follows.

a. Hook the carabiner (A) in the location shown in the figure and fold the belt slinger (B) in two for installation.

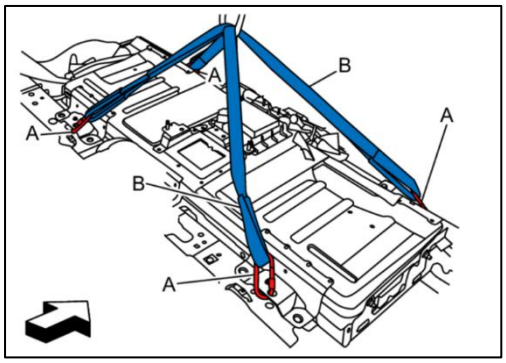

⇦ : Vehicle front

⚠WARNING

To avoid death or serious injury be sure to wear insulated protective wear.

⚠CAUTION

To avoid vehicle damage install the carabiner diagonal from each other.

b. Using the mobile floor crane (A), remove the Li-ion battery assembly from the left side of the vehicle.

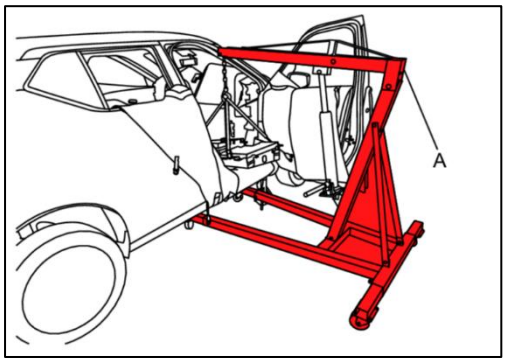

⚠WARNING

To avoid death or serious injury be sure to wear insulated protective wear.

⚠CAUTION

- To avoid vehicle damage care the B-pillar, front door finisher, and instrument panel.
- To avoid vehicle damage be careful that the headlining does not come in contact with the mobile floor crane.
- To avoid vehicle damage be careful to avoid damaging the body panel.

24. Move Li-ion battery assembly and place on the workbench.

⚠WARNING

To avoid death or serious injury be sure to wear insulated protective wear.

9. Important Additional Information

9-1 Recovery/Recycling of the High-voltage Battery

The high-voltage battery is fully recyclable. For information regarding safe recovery and recycling of the high-voltage battery, it is recommended you contact the nearest NISSAN dealer. For assistance in finding your nearest dealer please call Nissan Customer Assistance.

10. Explanation of Pictograms Used

10-1 Explanation of Pictograms Used

This manual describes emergency response operations and important safety related warnings for this vehicle.

This vehicle is an electrically driven car equipped with a high-voltage battery pack. Failure to follow recommended practices during emergency responses will cause death or serious personal injury.

Please read this manual in advance in order to understand the features of this vehicle and to help you deal with incidents involving this vehicle. Follow the procedures in order to help assure a safe and successful first response operation.

IMPORTANT INFORMATION ABOUT THIS MANUAL

You may see various symbols in this manual. They have the following meanings:



⚠DANGER

This symbol is used to inform you of an operation which will result in death or serious personal injury if instructions are not followed.

Example: Touching high-voltage components without using the appropriate protective equipment will result in electrocution.

⚠WARNING

This symbol is used to inform you of an operation which may cause death or serious personal injury if instructions are not followed.

⚠CAUTION

This symbol is used to inform you of an operation which may cause personal injury or component damage if instructions are not followed.

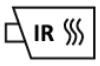	Thermal imaging camera		Risk of explosion		Toxic
	Corrosive		Harmful to humans		General warning sign
	Electric shock hazard		Extinguish using water		

Please note that there may be differences between this manual and the vehicle specification due to specification changes.

© 2026 Nissan Motor Co., Ltd.
All rights reserved.
This document may not be altered without the written permission of Nissan Motor Co., Ltd.
Pub. No.