

2027 ARMADA

OWNER'S MANUAL
and MAINTENANCE INFORMATION

For your safety, read carefully and keep in this vehicle.

CALIFORNIA PROPOSITION 65 WARNING

⚠WARNING

Operating, servicing and maintaining a passenger vehicle or off-highway motor vehicle can expose you to chemicals including engine exhaust, carbon monoxide, phthalates, and lead, which are known to the State of California to cause cancer and birth defects or other reproductive harm. To minimize exposure, avoid breathing exhaust, do not idle the engine except as necessary, service your vehicle in a well-ventilated area and wear gloves or wash your hands frequently when servicing your vehicle. For more information go to www.P65Warnings.ca.gov/passenger-vehicle.

Foreword

BASIC INFORMATION

This manual was prepared to help you understand the operation and maintenance of your vehicle so that you may enjoy many miles (kilometers) of driving pleasure. Please read through this manual before operating your vehicle.

A separate Warranty Information Booklet can be found at: https://www.nissanusa.com/owners/manuals-guides.html for U.S. or https://www.nissan.ca/owners/warranties-and-coverage/limited-warranty.html for Canada. The "Maintenance and schedules" section of this manual explains details about maintaining and servicing your vehicle.

Additionally, a separate Customer Care and Lemon Law Information Booklet (U.S. only) will explain how to resolve any concerns you may have with your vehicle, and clarify your rights under your state's lemon law.

In addition to factory-installed options, your vehicle may also be equipped with additional accessories installed prior to delivery. It is important that you familiarize yourself with all disclosures, warnings, cautions and instructions concerning proper use of such accessories prior to operating the vehicle and/or accessory. It is recommended that you visit a NISSAN dealer for details concerning the particular accessories with which your vehicle is equipped.

A NISSAN dealership knows your vehicle best. When you require any service or have any questions, they will be glad to assist you with the extensive resources available to them.

READ FIRST — THEN DRIVE SAFELY

Before driving your vehicle, please read this Owner's Manual carefully. This will ensure familiarity with controls and maintenance requirements, assisting you in the safe operation of your vehicle.

⚠ WARNING

IMPORTANT SAFETY INFORMATION REMINDERS!

Follow these important driving rules to help ensure a safe and comfortable trip for you and your passengers!

- **NEVER drive under the influence of alcohol or drugs.**
- **ALWAYS observe posted speed limits and never drive too fast for conditions.**
- **ALWAYS give your full attention to driving and avoid using vehicle features or taking other actions that could distract you.**
- **ALWAYS use your seat belts and appropriate child restraint systems. Pre-teen children should be seated in the rear seat.**
- **ALWAYS provide information about the proper use of vehicle safety features to all occupants of the vehicle.**
- **ALWAYS review this Owner's Manual for important safety information.**

ON-PAVEMENT AND OFF-ROAD DRIVING

⚠ WARNING

This vehicle will handle and maneuver differently from an ordinary passenger car because it has a higher center of gravity for off-road use. As with other vehicles with features of this type, failure to operate this vehicle correctly may result in loss of control or an accident.

For additional information, see "On-pavement and off-road driving precautions" (P.293), "Avoiding collision and rollover" (P.293) and "Driving safety precautions" (P.295).

MODIFICATION OF YOUR VEHICLE

⚠ WARNING

This vehicle should not be modified. Modification could affect its performance, safety, emissions or durability and may even violate governmental regulations. In addition, damage or performance problems resulting from modifications may not be covered under NISSAN warranties.

If modification of an advanced front air bag system is necessary to accommodate a person with disabilities, consult the contact information provided below before making any changes.

For U.S. customers:

https://www.nissanmobilityassist.com

For Canadian customers:

See the NISSAN CUSTOMER CARE PROGRAM page in this Owner's Manual for contact information.

⚠ WARNING

Installing an aftermarket On-Board Diagnostic (OBD) plug-in device that uses the port during normal driving, for example remote insurance company monitoring, remote vehicle diagnostics, telematics or engine reprogramming, may cause interference or damage to vehicle systems. We do not recommend or endorse the use of any aftermarket OBD plug-in devices, unless specifically approved by NISSAN. The vehicle warranty may not cover damage caused by any aftermarket plug-in device.

WHEN READING THE MANUAL

This manual includes information for all features and equipment available on this model. Features and equipment in your vehicle may vary depending on model, trim level, options selected, order, date of production, region or availability. Therefore, you may find information about features or equipment that are not included or installed on your vehicle.

All information, specifications and illustrations in this manual are those in effect at the time of printing. NISSAN reserves the right to change specifications, performance, design or component suppliers without notice and without obligation. From time to time, NISSAN may update or revise this manual to provide Owners with the most accurate information currently available. Please carefully read and retain with this manual all revision updates sent to you by NISSAN to ensure you have access to accurate and up-to-date information regarding your vehicle. Current versions of vehicle Owner's Manuals and any updates can also be found in the Owner section of the NISSAN website at **https://www.nissanusa.com/owners/manuals-guides.html for US or https://www.nissan.ca/owners/manuals-and-guides.html for Canada.** If you have questions concerning any information in your Owner's Manual, contact NISSAN Consumer Affairs. For contact information, refer to the NISSAN CUSTOMER CARE PROGRAM page in this Owner's Manual.

IMPORTANT INFORMATION ABOUT THIS MANUAL

You will see various symbols in this manual. They are used in the following ways:

⚠ WARNING

This is used to indicate the presence of a hazard that could cause death or serious personal injury. To avoid or reduce the risk, the procedures must be followed precisely.

⚠ CAUTION

This is used to indicate the presence of a hazard that could cause minor or moderate personal injury or damage to your vehicle. To avoid or reduce the risk, the procedures must be followed carefully.

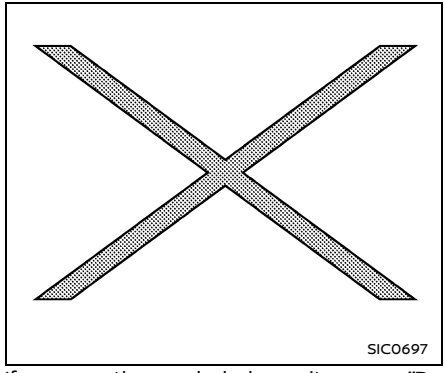
SIC0697

If you see the symbol above, it means **"Do not do this"** or **"Do not let this happen"**.



If you see a symbol similar to those above in an illustration, it means the arrow points to the front of the vehicle.



Arrows in an illustration that are similar to those above indicate movement or action.



Arrows in an illustration that are similar to those above call attention to an item in the illustration.

CALIFORNIA PERCHLORATE ADVISORY

Some vehicle parts, such as lithium batteries, may contain perchlorate material. The following advisory is provided: "Perchlorate Material - special handling may apply, see www.dtsc.ca.gov/hazardouswaste/perchlorate."

QR CODE

The word "QR code" is registered trademark of DENSO WAVE INCORPORATED in Japan and other countries.

COPYRIGHT

© 2026 NISSAN MOTOR CO., LTD.

All rights reserved. No part of this Owner's Manual may be reproduced or stored in a retrieval system, or transmitted in any form, or by any means, electronic, mechanical, photocopying, recording or otherwise, without the prior written permission of Nissan Motor Co., Ltd.

NISSAN CUSTOMER CARE PROGRAM

NISSAN CARES ...

Both NISSAN and your NISSAN dealer are dedicated to serving all your automotive needs. Your satisfaction with your vehicle and your NISSAN dealer are our primary concerns. Your NISSAN dealer is always available to assist you with all your automobile sales and service needs.

However, if there is something that your NISSAN dealer cannot assist you with or you would like to provide NISSAN directly with comments or questions, please contact the NISSAN Consumer Affairs Department using our toll-free number:

For U.S. customers

1-800-NISSAN-1

(1-800-647-7261)

For Canadian customers
1-800-387-0122

The Consumer Affairs Department will ask for the following information:

- Your name, address, and telephone number
- Vehicle identification number (attached to the top of the instrument panel on the driver's side)
- Date of purchase
- Current odometer reading
- Your NISSAN dealer's name
- Your comments or questions

OR

You can write to NISSAN with the information at:

For U.S. customers

Nissan North America, Inc.

Consumer Affairs Department

P.O. Box 685003

Franklin, TN 37068-5003

or via e-mail at:

nnaconsumeraffairs@nissan-usa.com

For Canadian customers

Nissan Canada Inc.

5290 Orbitor Drive

Mississauga, Ontario L4W 4Z5

or via e-mail at:

information.centre@nissancanada.com

If you prefer, visit us at:
www.nissanusa.com (for U.S. customers) or
www.nissan.ca (for Canadian customers)

We appreciate your interest in NISSAN and thank you for buying a quality NISSAN vehicle.

NISSAN SOFTWARE LICENSE

- Your vehicle includes physical parts and/or physical components of such parts on which software and/or firmware ("Software") is embedded or installed. Additionally, updates to Software may be made available by NISSAN for download and installation by owners from time to time as determined by NISSAN in its sole discretion. Such Software, and all updates thereto, including updates delivered by NISSAN to your vehicle over the air (collectively "Updates"), are licensed, and not sold, to you. A portion of the Software may contain or consist of open source software, which may be used under the terms and conditions of the specific license under which the open source software is distributed. For other Software, including Software for which there is no separate license agreement between you and the manufacturer or owner of the Software, the terms and conditions governing your right to use and the use of the installed Software, including any Updates, applications, services, and content provided for or through the Software, are set forth in the End User License Agreement found at:

  For U.S. customers — https://www.nissanusa.com/owners/vehicle-software.html

  For Canadian customers — https://www.nissan.ca/owners/owner-support.html

  Your use of the Software, including any Updates, constitutes consent to the End User License Agreement's terms and conditions.
- PLEASE NOTE: The End User License Agreement contains an arbitration clause. You may opt out of this arbitration clause within 30 days of the date of your vehicle purchase by sending a signed, written notice to NISSAN at the following address:

For U.S. customers	**For Canadian customers**
Nissan North America, Inc.	Nissan Canada Inc.
Consumer Affairs Department	Consumer Affairs Department
P.O. Box 685003	5290 Orbitor Drive
Franklin, TN 37068-5003	Mississauga, Ontario L4W 4Z5

- Please refer to "Updating system software" in the 5. Information section or "Software Update" in the 2. Getting Started section of the NissanConnect® Owner's Manual for information about installing Over-the-Air Updates. For questions or assistance concerning installation of any over-the-air Update, you may contact NISSAN Owner Services at 1-800-333-0207 for U.S. customers, or for Canadian customers NISSAN Consumer Affairs at consumeraffairs@nissancanada.com. You may also choose to visit a NISSAN dealer for assistance - charges may apply.

RIGHT TO REPAIR DISCLAIMER – NISSAN CANADA

NOTICE TO QUEBEC CONSUMERS:

Nissan Canada Inc. is pleased to offer a 36-month / 60,000 km (whichever occurs first) limited new-vehicle warranty on your Nissan vehicle. This warranty covers repairs on any part of the vehicle supplied by Nissan Canada that is defective in material or workmanship, subject to the terms and conditions outlined in your warranty booklet.

In accordance with Quebec's Consumer Protection Act, Nissan Canada is required to disclose whether we guarantee the availability of replacement parts, repair services, and technical information necessary to maintain or repair your vehicle or its components.

While Nissan Canada is committed to honouring the terms of our limited warranty and providing high-quality service through our authorized dealerships and Certified Collision Repair Centres, ***we do not guarantee the availability of replacement parts, repair services, or technical information necessary to maintain or repair your vehicle or its components beyond the scope of our warranty obligations.***

For more information on your warranty coverage, please refer to your Owner's Manual and Warranty Information Booklet, or visit www.nissan.ca.

Table of Contents

Illustrated table of contents	0
Safety — Seats, seat belts and supplemental restraint system	1
Instruments and controls	2
Pre-driving checks and adjustments	3
Monitor, climate, audio, phone and voice recognition systems	4
Starting and driving	5
In case of emergency	6
Appearance and care	7
Do-it-yourself	8
Maintenance and schedules	9
Technical and consumer information	10
Index	11

MEMO

0 Illustrated table of contents

Seats, seat belts and Supplemental Restraint System (SRS) 4
Exterior front 5
Exterior rear 6
Exterior (NISMO models) 7
Passenger compartment 8
Cockpit 9
Instrument panel 10
Meters and gauges 11
Engine compartment 12
VR35DDTT engine 12
Warning and indicator lights 13

SEATS, SEAT BELTS AND SUPPLEMENTAL RESTRAINT SYSTEM (SRS)

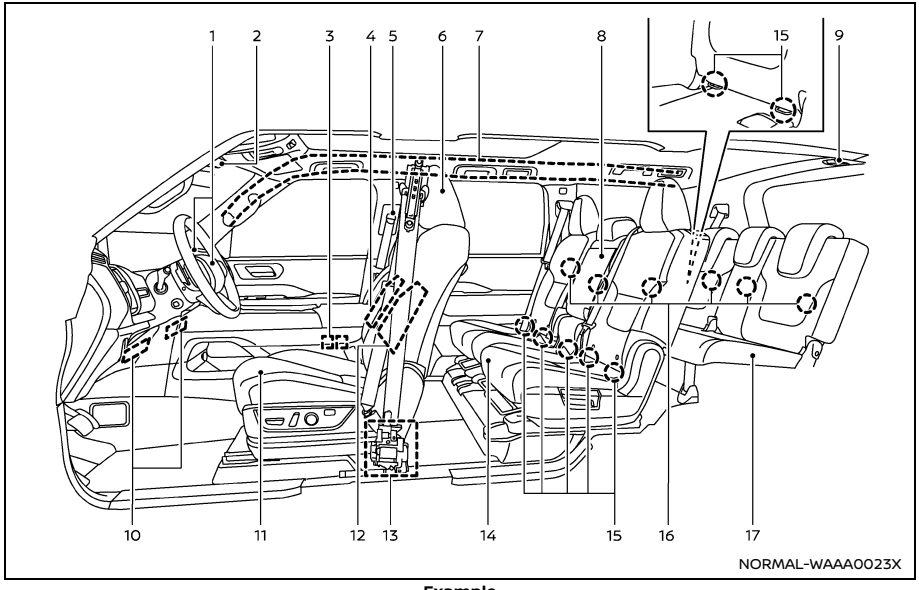

Example

1. Supplemental front-impact air bags (P.68)
2. Front passenger air bag status light (P.76)
3. Occupant classification sensors (weight sensors) (P.68)
4. Front central seat-mounted side-impact supplemental air bag* (P.68)
5. Seat belts (P.35)
6. Head restraints/headrests (P.30)
7. Roof-mounted curtain side-impact and rollover supplemental air bags (P.68)
8. Armrest (2nd row bench seat)* (P.25)
9. Seat belt for 3rd row center seat (P.41)
10. Driver and front passenger supplemental knee air bags (P.68)
11. Front seats (P.18)
12. Front seat-mounted side-impact supplemental air bags (P.68)
13. Seat belt pretensioners (P.83)
14. 2nd row seats (P.20)
    - Child restraints (P.48)
15. LATCH (Lower Anchors and Tethers for CHildren) system (for 2nd row and 3rd row right outboard seats) (P.50)
16. Child restraint anchor points (for top tether strap) (P.54)
17. 3rd row seats (P.22)
    - Child restraints (P.48)

*: if so equipped

EXTERIOR FRONT

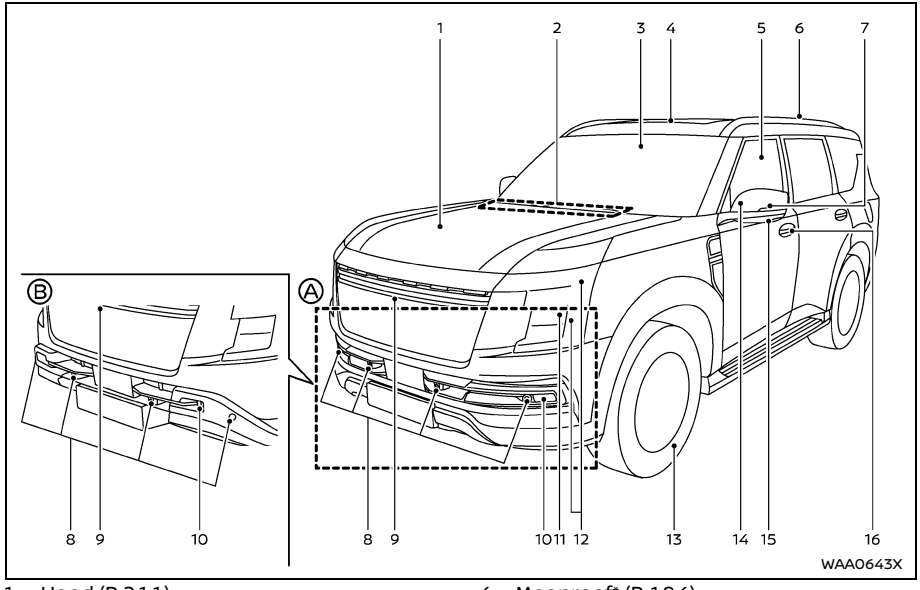

1. Hood (P.211)
2. Windshield wiper and washer
   - Switch operation (P.151)
   - Wiper blade replacement (P.480)
   - Window washer fluid (P.475)
   - Windshield wiper deicer* (P.154)
3. Front camera (P.157, P.274, P.316, P.319, P.333, P.349, P.381)
4. Moonroof* (P.184)
5. Power windows (P.182)
6. Roof rack (P.181)
7. Side turn signal lights* (P.160, P.489)
8. Sonar sensors
   - Sonar system (P.427)
   - ProPILOT Assist 2.1* (P.361)
9. Front view camera* (P.245)
10. Front fog lights* (P.160)
11. Headlights (P.155)
12. Front parking light/daytime running light/front turn signal light (P.155)
    Front side marker light (P.489)
13. Tires
    - Wheel and tires (P.490, P.528)
    - Flat tire (P.443)
    - Tire Pressure Monitoring System (TPMS) (P.107, P.290)
14. Outside mirrors (P.230)
15. Side view camera* (P.245)
16. Doors
    - Keys (P.195)
    - Door locks (P.196)
    - Intelligent Key system (P.199)
    - Security systems (P.149)
    - Remote engine start (P.209)

Ⓐ Type A
Ⓑ Type B
*: if so equipped

EXTERIOR REAR

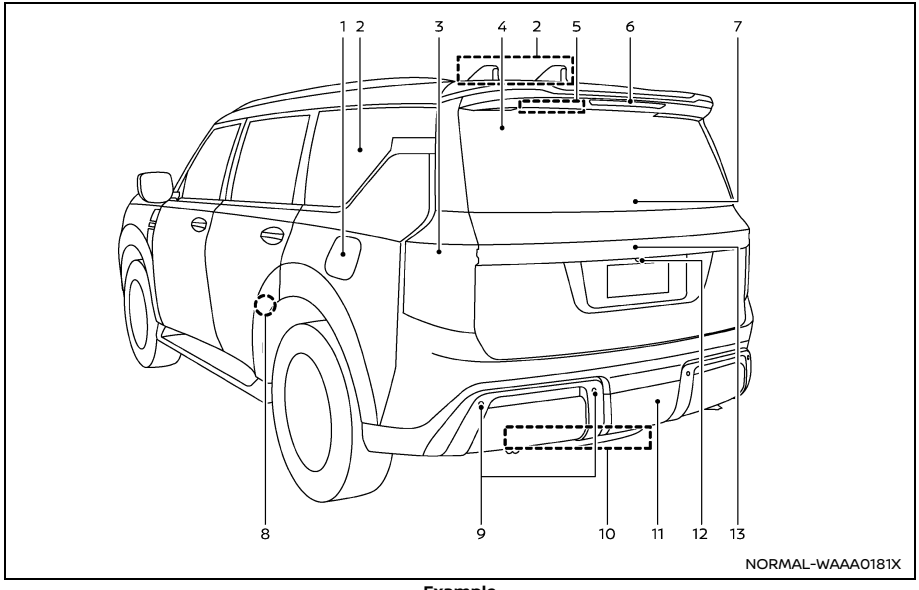

Example

1. Fuel-filler door (P.218)
   - Fuel information (P.524)
2. Antenna** (P.283)
3. Rear combination light (P.489)
4. Rear window defroster (P.154)
5. Rear window wiper and washer
   - Switch operation (P.153)
   - Window washer fluid (P.475)
6. High-mounted stop light (P.489)
7. Driving recorder camera* (P.274)
   Intelligent Rear View Mirror camera* (P.223)
8. Child safety rear door locks (P.199)
9. Sonar sensors
   - Rear Automatic Braking (RAB) (P.400)
   - Sonar system (P.427)
   - ProPILOT Assist 2.1* (P.361)
10. Spare tire (under the vehicle) (P.443)
11. Trailer hitch (P.541)
12. Rear view camera (P.239, P.245)
13. Liftgate (P.211)
    - Intelligent Key system* (P.199)

*: if so equipped

**: For ProPILOT Assist 2.1 models, there are two antennas on the roof. (Left side is Global Navigation Satellite System (GNSS) antenna, right side is radio antenna.)

Except for ProPILOT Assist 2.1 models, there is one antenna on the roof.

EXTERIOR (NISMO models)

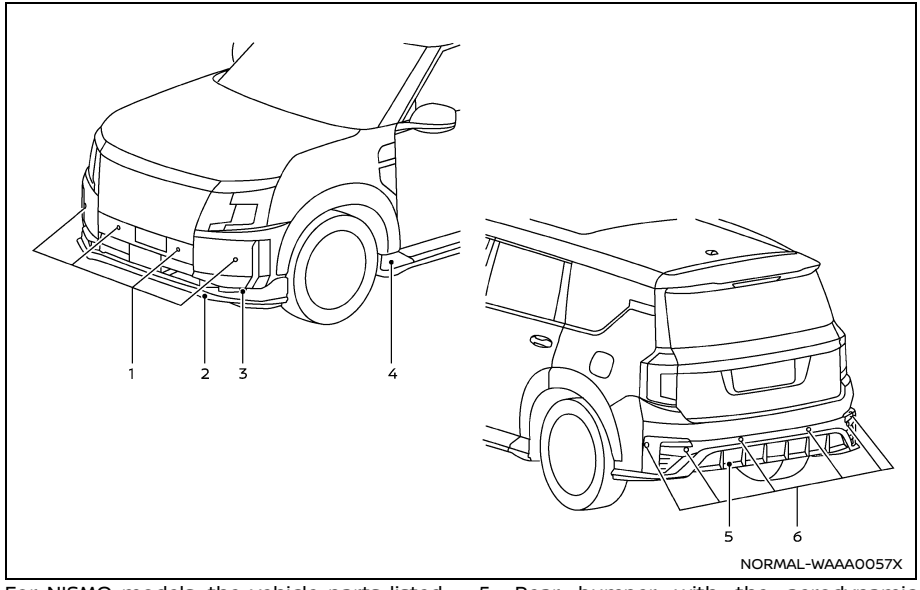

For NISMO models, the vehicle parts listed below require special care or caution for treating. Also, the front sensors are located differently from the other models. Refer to the additional information in each section.

1. Front sonar sensors (P.427)
2. Front spoiler (P.217, P.295)
3. Front fog light (P.160, P.489)
4. Side sill extensions (P.217, P.295)
5. Rear bumper with the aerodynamic diffuser (P.217, P.295)
6. Rear sonar sensors (P.427)

PASSENGER COMPARTMENT

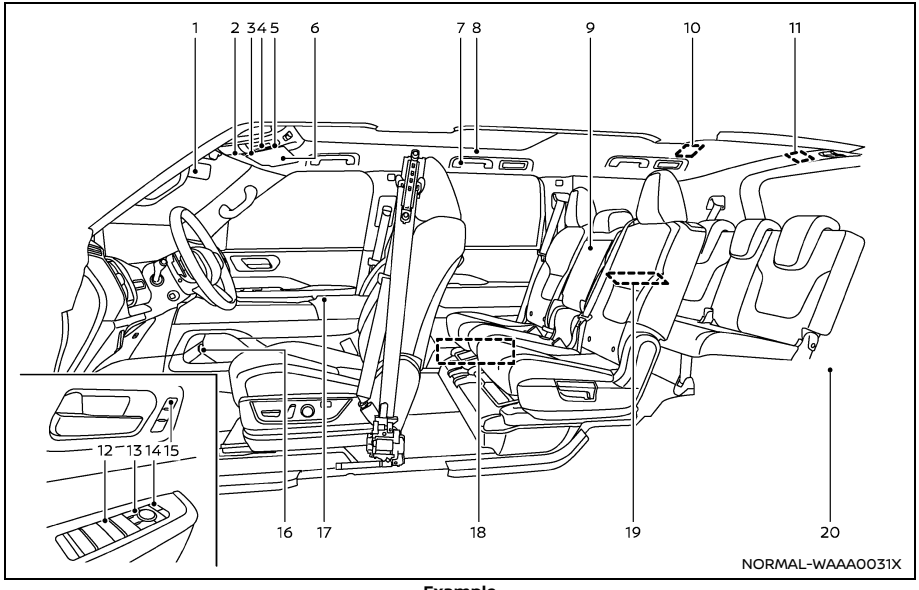

Example

1. Inside mirror (P.222)
2. Overhead console (P.177)
3. Map lights (P.187)
   - HomeLink® Universal Transceiver* (P.188)
   - Microphone**
4. Moonroof switch* (P.184)
5. Emergency Call (SOS) button* (P.173)
6. Sun visors (P.221)
7. Assist grips (P.222)
   Coat hooks (P.179)
8. Rear personal lights (P.187)
9. Armrest (2nd row seat)* (P.25)
   Cup holders (2nd row seat) (P.175)
10. Rear room light (P.188)
11. Cargo light (P.188)
12. Power window switch (P.182)
13. Outside mirror control switch (driver's side) (P.230)
14. Power door lock switches (P.198)
15. Memory seat switches* (P.233)
16. Lower console tray (P.179)
    - Power outlet (P.168)
17. Console box (P.178)
    - Power outlet (P.168)
    - USB (Universal Serial Bus) charging connector (P.171)
    - Heated seat switches (2nd row seats)* (P.162)
    - Rear air conditioner control switches (P.270)
18. USB (Universal Serial Bus) charging connector* (P.171)
19. Cup holders (3rd row seat) (P.175)
    USB (Universal Serial Bus) charging connector* (P.171)
20. Cargo area
    - Power outlet* (P.168)
    - Cargo floor box (P.180)
    - Luggage hooks (P.180)
    - Jacking tools (P.445)

*: if so equipped

**: Refer to the separate NissanConnect® Owner's Manual.

COCKPIT

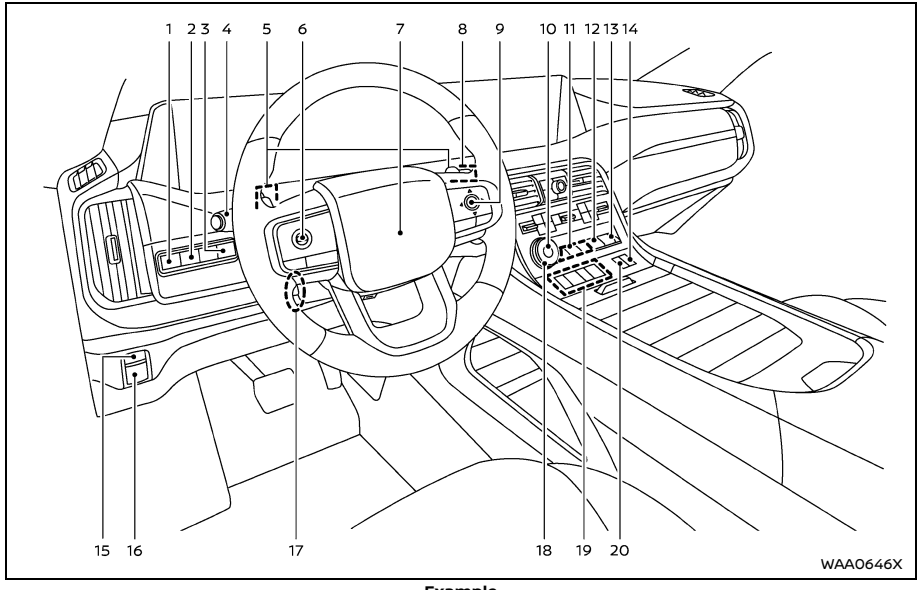

Example

1. Steering Assist switch (P.164, P.349)
2. Head Up Display (HUD) switch* (P.146)
3. Power liftgate switch* (P.211)
4. Headlight and turn signal switch (P.155)
   Fog light switch* (P.160)
5. Paddle shifters (P.305)
6. Steering-wheel-mounted controls (left side)
   - ProPILOT Assist switch (P.321, P.333, P.349)
   - Volume control**
7. Steering wheel (P.220)
   - Horn (P.161)
8. Wiper and washer switch (P.151)
9. Steering-wheel-mounted controls (right side)
   - Vehicle information display control (P.112)
   - Touch screen display control**
   - Audio control**
   - Bluetooth® Hands-Free Phone System switches**
   - Voice Recognition system switch**
10. Hill descent control switch* (P.426)
11. 4WD shift switch* (P.407)
12. Differential lock mode switch* (P.166, P.412)
13. Vehicle Dynamic Control (VDC) OFF switch (P.422)
14. Idling Stop OFF switch (P.432)
15. Automatic brake hold switch (P.309)
16. Parking brake switch (P.307)
17. Tilt and telescopic steering wheel control* (P.220)
    Tilt and telescopic steering lock lever* (P.220)
18. Drive mode selector* (P.312)
19. Shift buttons (P.302)
20. Air suspension AUTO switch* (P.413)

*: if so equipped

**: Refer to the separate NissanConnect® Owner's Manual (if so equipped).

INSTRUMENT PANEL

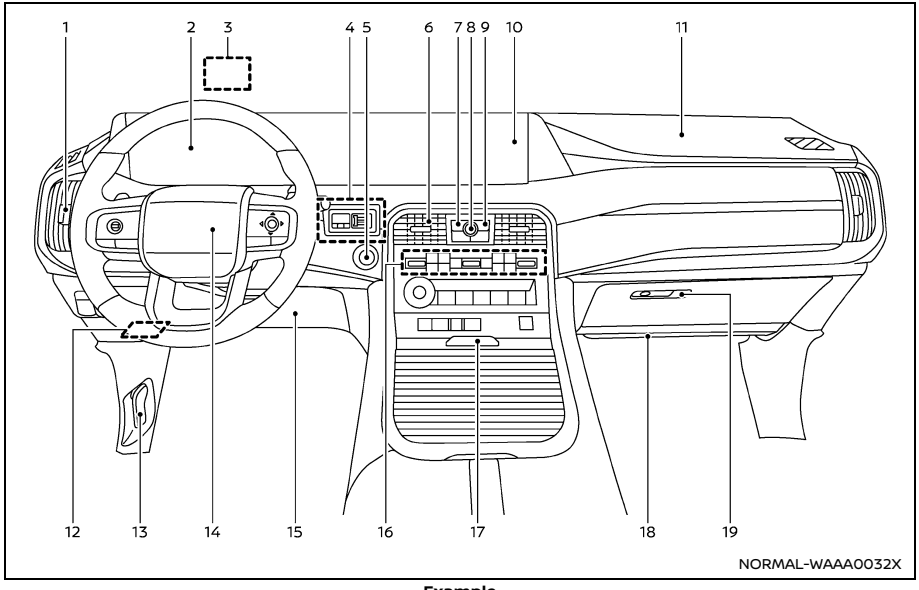

Example

1. Side ventilator (P.265)
2. Meters and gauges (P.96)
   Clock (P.142)
3. Head Up Display (HUD)* (P.146)
4. Trailer Brake Controller Unit (TBCU)* (P.167)
5. Push-button ignition switch (P.297)
6. Center ventilator (P.264)
7. CAMERA*/☀/☽ button (P.245)
8. Audio switches**
9. Hazard indicator flasher switch (P.442)
10. Touch screen display (**, P.143)
    - Intelligent Around View® Monitor* (P.245)
    - RearView monitor* (P.239)
    - NissanConnect® system**
    - Heater and air conditioner (P.265)
    - Defroster (P.154)
    - Heated steering wheel* (P.161)
    - Heated seats* (P.162)
    - Ventilated seats* (P.163)
11. Front passenger supplemental air bag (P.68)
12. Fuse box (P.482)
13. Interior hood release handle (P.211)
14. Driver supplemental front-impact air bag (P.68)
15. Driver supplemental knee air bag (P.81)
16. Heater and air conditioner (P.265)
17. Console box (P.178)
    - Cup holders (P.175)
    - USB (Universal Serial Bus) connection ports**
    - Magnetic wireless charger* (P.171)
18. Front passenger supplemental knee air bag (P.68)
19. Glove box (P.178)

*: if so equipped

**: Refer to the separate NissanConnect® Owner's Manual (if so equipped).

METERS AND GAUGES

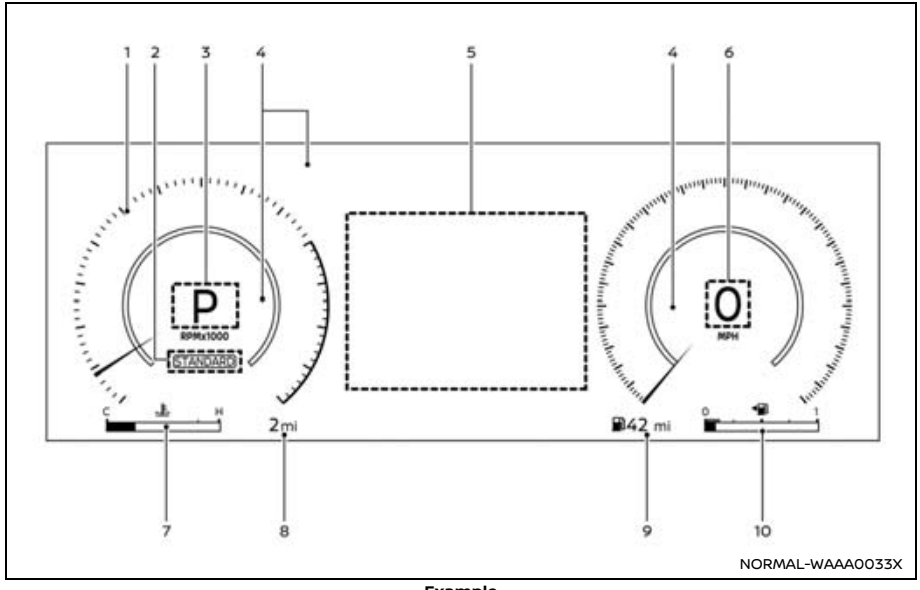

Example

1. Tachometer (P.99)
2. Drive Mode Selector indicator* (P.312)
3. Automatic Transmission (AT) position indicator (P.101)
4. Warning and indicator lights (P.102)
5. Vehicle information display (P.111)
6. Speedometer (P.98)
7. Engine coolant temperature gauge (P.99)
8. Odometer (P.98)
9. Distance to empty (dte) (P.98)
10. Fuel gauge (P.100)

*: if so equipped

The view of the meter screen can be changed. (See "Changing the meter screen view" (P.97).)

ENGINE COMPARTMENT

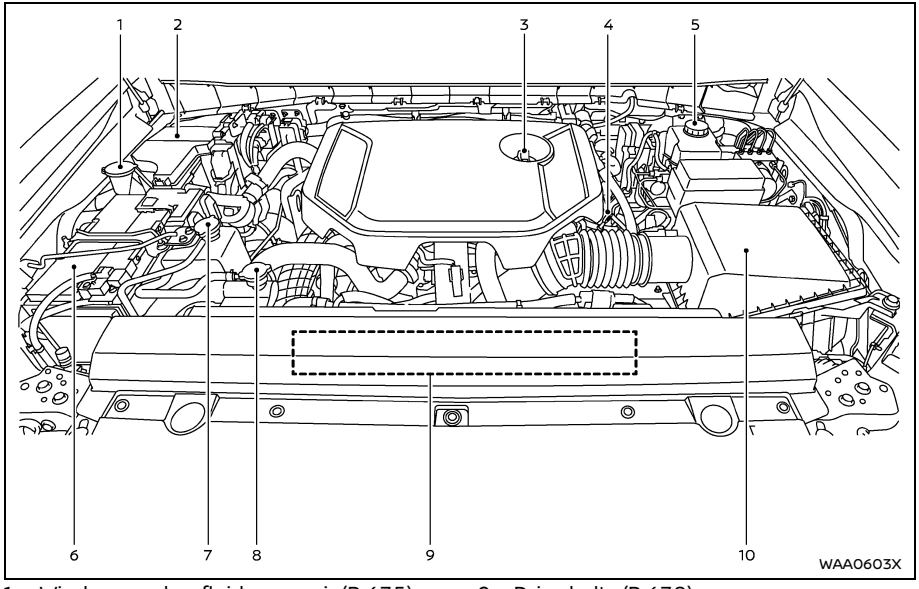

1. Window washer fluid reservoir (P.475)
2. Fuse/fusible link holder (P.482)
3. Engine oil filler cap (P.471)
4. Engine oil dipstick (P.471)
5. Brake fluid reservoir (P.474)
6. Battery (P.476)
7. Engine coolant reservoir (P.469)
8. Radiator filler cap (P.469)
9. Drive belts (P.478)
10. Air cleaner (P.480)

VR35DDTT ENGINE

NOTE:
Your vehicle may not be equipped with an engine cover.

WARNING AND INDICATOR LIGHTS

Warning/Indicator light (red)

- BRAKE
  or
  
  Brake warning light (P.102)
- 
  Charge warning light (P.103)
- 
  Electric power steering warning light (P.103)
- 
  Electric shift control system warning light (P.103)
- PARK
  or
  
  Electronic parking brake warning light (P.103)
- 
  Engine oil pressure warning light (P.104)
- 
  Hands OFF warning light (P.104)
- 
  Master warning light (P.104)
- 
  Seat belt warning light (P.104)
- 
  Supplemental air bag warning light (P.105)

Warning/Indicator light (yellow)

- ABS
  or
  
  Anti-lock Braking System (ABS) warning light (P.105)
- 
  Electronic parking brake system warning light (P.106)
- 
  Electric power steering warning light (P.106)
- 
  Automatic Emergency Braking (AEB) system OFF warning light (P.106)
- 
  Front passenger air bag status light (P.106)
- 
  Hill descent control system on indicator light (if so equipped) (P.106)
- 
  Low tire pressure warning light (P.107)
- 
  Malfunction Indicator Light (MIL) (P.108)
- 
  Master warning light (P.109)
- 
  Rear Automatic Braking (RAB) system OFF warning light (P.109)
- 
  Slip indicator light (P.109)

- 

Vehicle Dynamic Control (VDC) off indicator light (P.109)
- DIFF LOCK
Differential lock indicator (if so equipped) (P.106)

Warning/Indicator light (other)

- 

Automatic brake hold indicator light (white) (P.109)
- 

Automatic brake hold indicator light (green) (P.110)
- 
Exterior light indicator (P.110)
- 
Front fog light indicator light (if so equipped) (P.110)
- 

High beam assist indicator light (P.110)
- 
High beam indicator light (P.110)
- 
Low beam indicator light (P.110)
- 
Turn signal/hazard indicator lights (P.110)

1 Safety — Seats, seat belts and supplemental restraint system

Seats 17
- Basic information 17
- Front seats 18
- 2nd row seats 20
- 3rd row seats 22
- Armrest 25
- Flexible seating 25
- Seat adjustment using touch screen display (if so equipped) 29
- Resetting the seat positions (if so equipped) 29

Head restraints/headrests 30
- Basic information 30
- Adjustable head restraint/headrest components 31
- Non-adjustable head restraint/headrest components 32
- Remove 33
- Install 33
- Adjust 34

Seat belts 35
- Precautions on seat belt usage 35
- Pregnant women 38
- Injured persons 38
- Three-point type seat belt 38
- Seat belt extenders 45
- Seat belt maintenance 45

Child safety 46
- Basic information 46
- Infants 47
- Small children 47
- Larger children 47

Child restraints 48
- Precautions on child restraints 49
- Lower Anchors and Tethers for CHildren System (LATCH) 50
- Top tether anchor 54
- Rear-facing child restraint installation using LATCH 55
- Rear-facing child restraint installation using the seat belts 57
- Forward-facing child restraint installation using LATCH 59
- Forward-facing child restraint installation using the seat belts 61
- Installing top tether strap 64
- Booster seats 65

Supplemental restraint system 68
- Precautions on supplemental restraint system 68

NISSAN Advanced Air Bag System (front seats) 74
Driver and front passenger supplemental knee air bag 81
Front, front central* seat-mounted side-impact supplemental air bag and roof-mounted curtain side-impact and rollover supplemental air bag systems 82
Seat belts with pretensioners (front and second row outboard seats) 83
An air bag only works once 85
Supplemental air bag warning labels 88
Supplemental air bag warning light 88
Repair and replacement procedure 88

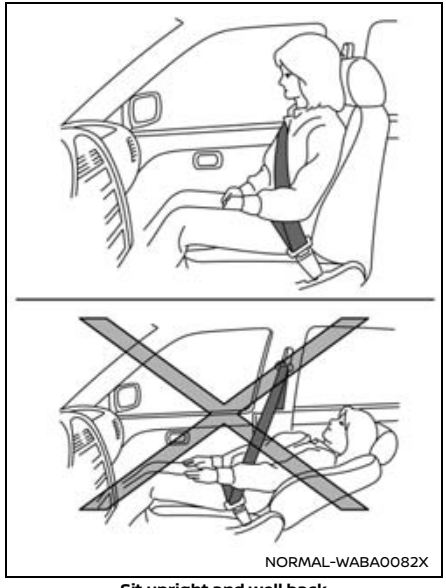

Sit upright and well back

BASIC INFORMATION

⚠ WARNING

- **Do not ride in a moving vehicle when the seatback is reclined. This can be dangerous. The shoulder belt will not be against your body. In an accident, you could be thrown into it and receive neck or other serious injuries. You could also slide under the lap belt and receive serious internal injuries.**
- **For the most effective protection when the vehicle is in motion, the seat should be upright. Always sit well back and upright in the seat with both feet on the floor and adjust the seat belt properly. See "Precautions on seat belt usage" (P.35).**
- **After adjustment, gently rock the seat to make sure it is securely locked (for manual seats if so equipped).**
- **Do not leave children unattended inside the vehicle. They could unknowingly activate switches or controls or make the vehicle move. Unattended children could become involved in serious accidents.**
- **To help avoid risk of injury or death through unintended operation of the vehicle and/or its systems, do not leave children, people who require the assistance of others or pets unattended in your vehicle. Additionally, the temperature inside a closed vehicle on a warm day can quickly become high enough to cause a significant risk of injury or death to people and pets.**
- **The seatback should not be reclined any more than needed for comfort. Seat belts are most effective when the passenger sits well back and straight up in the seat. If the seatback is reclined, the risk of sliding under the lap belt and being injured is increased.**
- **Do not place objects under the front seats as they could get stuck and prevent the seat from locking in place which could lead to an accident.**
- **Do not leave a cigarette lighter in the vehicle or place it on the floor or seat as it may be lit accidentally when luggage is loaded, when the seat is adjusted, by a child or by being stepped on by a passenger, causing a fire.**

⚠ CAUTION

When adjusting the seat positions, be sure not to contact any moving parts to avoid possible injuries and/or damages.

FRONT SEATS

Front power seat adjustment

Operating tips:

- The power seat motor has an auto-reset overload protection circuit. If the motor stops during the seat adjustment, wait 30 seconds, then reactivate the switch.
- To avoid discharge of the battery, do not operate the power seats for a long period of time when the engine is not running.

See "Memory seat (if so equipped)" (P.233) for the seat position memory function (if so equipped).

The front power seat can also be adjusted by the touch screen display (if so equipped). See "Seat adjustment using touch screen display (if so equipped)" (P.29).

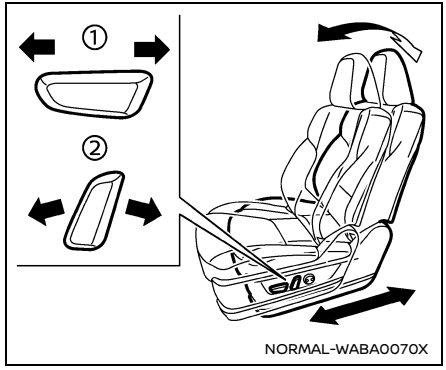

Forward and backward:

Move forward or backward the adjusting switch ① to the desired position.

Reclining:

Move forward or backward the adjusting switch ② to the desired position.

The reclining feature allows the adjustment of the seatback for occupants of different sizes to help obtain the proper seat belt fit. (See "Seat belts" (P.35).)

The seatback may be reclined to allow occupants to rest when the vehicle is parked.

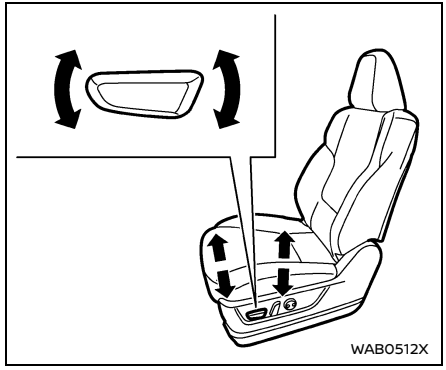

Seat lifter (if so equipped):

Move the switch as shown to adjust the angle of the front portion or height of the seat.

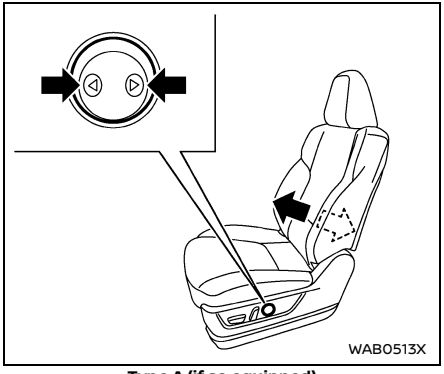

Type A (if so equipped)

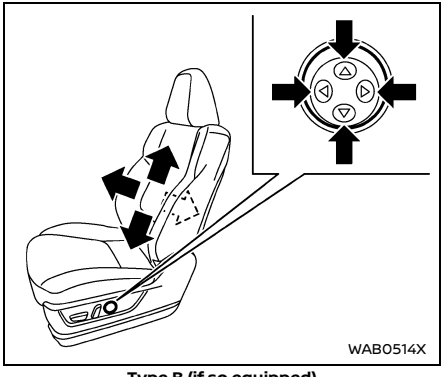

Type B (if so equipped)

Lumbar support (if so equipped)

The lumbar support feature provides lower back support to the driver and/or the front passenger.

Push the switch as shown to adjust the seat lumbar area until the desired position is achieved.

NOTE:

The adjusted air volume may become smaller due to continuous use. If this happens, push the switch to the back side for about 15 seconds to completely exhaust the air, then push the switch to the front side to fill the air up to your preferable adjustment amount.

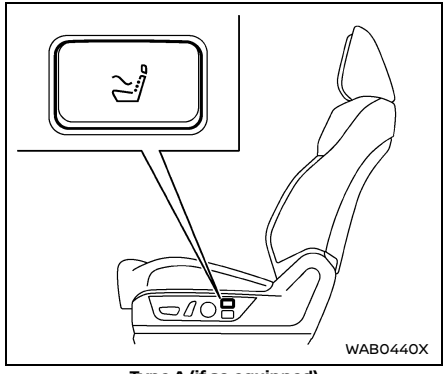

Type A (if so equipped)

Massage function (if so equipped)

Type A (if so equipped):

With the engine running and doors are closed, push the switch to start the massage function. To stop the function, push the switch again.

The massage function is automatically turned off after 30 minutes.

The massage mode can be selected by the touch screen display. See "Touch screen display" (P.143).

Type B (if so equipped):

With the engine running and doors are closed, turn on or off the massage function using touch screen display. The massage mode can be selected. (See "Touch screen

display" (P.143).)
The massage function is automatically turned off after 30 minutes.

NOTE:
Depending on the volume of the lumbar support, the start of the massage may be delayed.

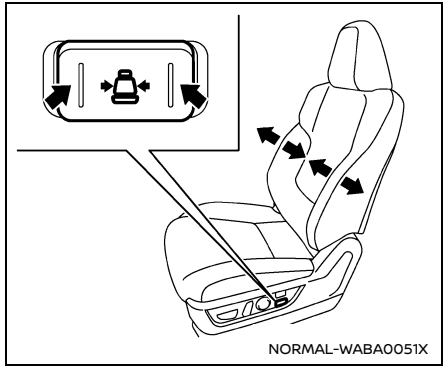
NORMAL-WABA0051X

Side support (if so equipped)

The side support feature provides support to the left and right sides of the body for the driver and the front passenger. Push the switch as shown to adjust the both seat sides area until the desired position is achieved.

Push the front side of the switch to tighten the support.

Push the rear side of the switch to expand the support.

NOTE:
The adjusted air volume may become smaller due to continuous use. If this happens, push the switch to the back side for about 15 seconds to completely exhaust the air, then push the switch to the front side to fill the air up to your preferable adjustment amount.

2ND ROW SEATS

Basic information

⚠ WARNING

- **Never allow anyone to ride in the cargo area or on the rear seat when it is in the fold-down position. Use of these areas by passengers without proper restraints could result in serious injury or death in an accident or sudden stop.**
- **When returning the seatbacks to the upright position, be certain they are completely secured in the latched position. If they are not completely secured, passengers may be injured in an accident or sudden stop.**
- **Properly secure all cargo to help prevent it from sliding or shifting. Do not place cargo higher than the seatbacks. In a sudden stop or collision, unsecured cargo could cause personal injury.**

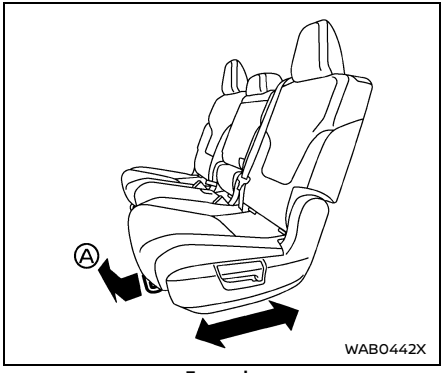

Example

Forward and backward

1. Pull up the adjusting lever Ⓐ.
2. Slide the seat to the desired position.
3. Release the adjusting lever Ⓐ to lock the seat in position.

Reclining

⚠ WARNING

- **Do not ride in a moving vehicle when the seatback is reclined. This can be dangerous. The shoulder belt will not be against your body. In an accident, you could be thrown into it and receive neck or other serious injuries. You could also slide under the lap belt and receive serious internal injuries.**
- **For the most effective protection when the vehicle is in motion, the seat should be upright. Always sit well back and upright in the seat with both feet on the floor and adjust the seat belt properly. See "Precautions on seat belt usage" (P.35).**
- **After adjustment, check to be sure the seat is securely locked.**

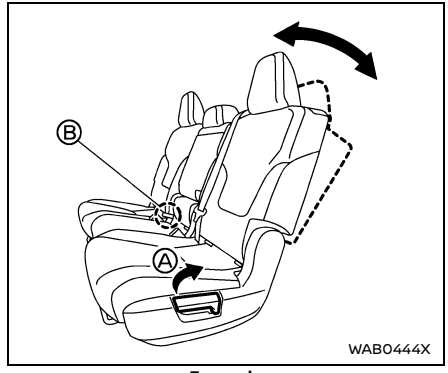

Example

Pull the reclining lever Ⓐ and position the seatback at the desired angle. Release the reclining lever after positioning the seat at the desired angle.

To return the seatback, pull the lever.

For the 2nd row bench seat models, pull the strap Ⓑ to recline and return the seatback of the center seat.

The reclining feature allows adjustment of the seatback for occupants of different sizes to help obtain proper seat belt fit. (See "Precautions on seat belt usage" (P.35).) The seatback may also be reclined to allow occupants to rest when the vehicle is parked.

Entry to 3rd row seat

The 2nd row seat can be moved forward for easy entry to or exit from the 3rd row seat.

⚠ CAUTION

- **When operating the 2nd row seat, make sure that the vehicle is stopped and the transmission is in the P (Park) position.**
- **Do not operate this feature when a passenger or a child restraint system with a child onboard.**
- **Do not drive with the 2nd row seat tipped up.**
- **Be careful not to allow the 2nd row seat to pinch, hit any part of your body or other people when operating the 2nd row seat. Make sure the seat path is clear of all objects before moving the seat.**

NOTE:
Before operating the 2nd row seat, move the corresponding front seat to a position where it does not contact the 2nd row seat.

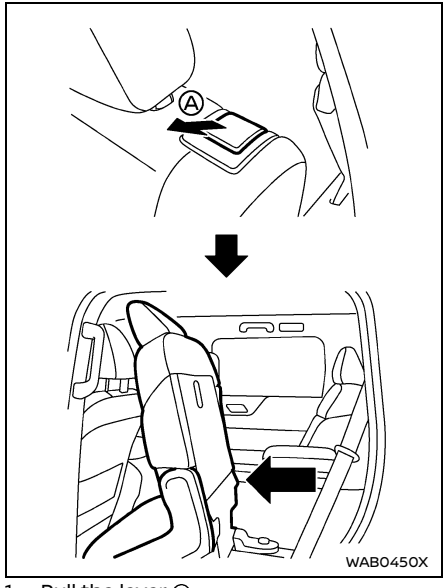

1. Pull the lever Ⓐ.
2. Tip up the seat and slide the seat forward.
3. When returning the seat to the seating position, slide the seat backward where the sufficient space for the third row seat foot area remains. Then tilt the seatback up and secure it in place.

3RD ROW SEATS

Basic information

⚠ WARNING

- **Never allow anyone to ride in the cargo area or on the rear seat when it is in the fold-down position. Use of these areas by passengers without proper restraints could result in serious injury or death in an accident or sudden stop.**
- **When returning the seatbacks to the upright position, be certain they are completely secured in the latched position. If they are not completely secured, passengers may be injured in an accident or sudden stop.**
- **Properly secure all cargo to help prevent it from sliding or shifting. Do not place cargo higher than the seatbacks. In a sudden stop or collision, unsecured cargo could cause personal injury.**

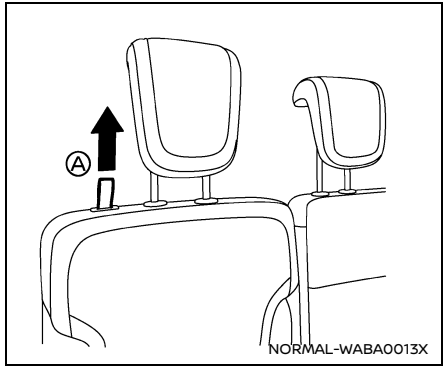

Manual seat adjustment (if so equipped)

Reclining:

Pull the strap Ⓐ and position the seatback at the desired angle. Release the strap after positioning the seat at the desired angle.

The reclining feature allows adjustment of the seatback for occupants of different sizes to help obtain proper seat belt fit. (See "Seat belts" (P.35).) The seatback may also be reclined to allow occupants to rest when the vehicle is parked.

⚠ WARNING

- **Do not ride in a moving vehicle when the seatback is reclined. This can be dangerous. The shoulder belt will not be against your body. In an accident, you could be thrown into it and receive neck or other serious injuries. You could also slide under the lap belt and receive serious internal injuries.**
- **For the most effective protection when the vehicle is in motion, the seat should be upright. Always sit well back and upright in the seat with both feet on the floor and adjust the seat belt properly. See "Seat belts" (P.35).**
- **After adjustment, check to be sure the seat is securely locked.**

Power seat adjustment (if so equipped)

NOTE:
To avoid discharging the vehicle battery, do not operate the power seats for a long period of time when the engine is not running.

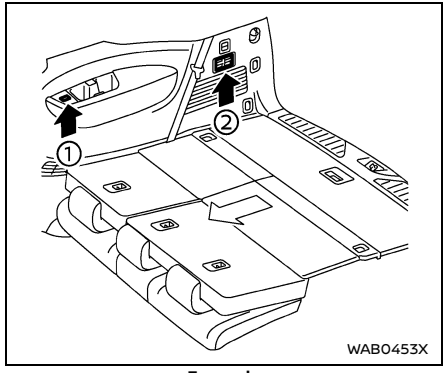

Example

The 3rd row power seat controls are located on the 3rd row cup holder console ① (both the driver's and front passenger's side). The 3rd row power folding seat controls located on the rear quarter trim panel behind the 3rd row seats (passenger's side) ②.

Before operating the 3rd row seats:

- Move the corresponding 2nd row seat to a position where it does not contact the 3rd row seat.
- Lower the 3rd row head restraint to the full down position.
- Disconnect and secure the center seat belt and tongues into the retractor base. See "3rd row center seat belt" (P.41).
  - Always reconnect the center seat belt when the seat is returned to the upright position

- Make sure that there are no objects on the seatback cushion.

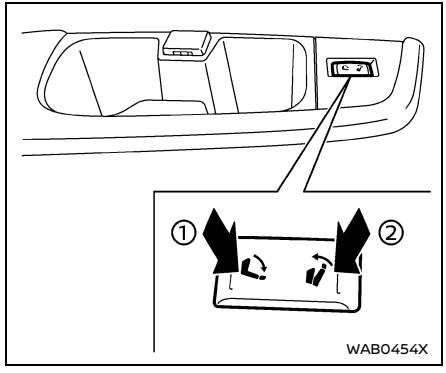

Reclining:

Push and hold the rear side of the switch ① beside the 3rd row cup holders until the desired seatback angle is obtained. To move the seatback forward again, push and hold the front side of the switch ② until the desired angle is obtained.

⚠ WARNING

- **Do not ride in a moving vehicle when the seatback is reclined. This can be dangerous. The shoulder belt will not be against your body. In an accident, you could be thrown into it and receive neck or other serious injuries. You could also slide under the lap belt and receive serious internal injuries.**
- **For the most effective protection when the vehicle is in motion, the seat should be upright. Always sit well back and upright in the seat with both feet on the floor and adjust the seat belt properly. See "Precautions on seat belt usage" (P.35).**

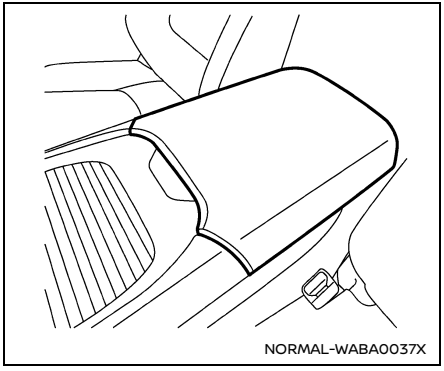

Front seats

ARMREST

The console box lid can be used as an armrest.

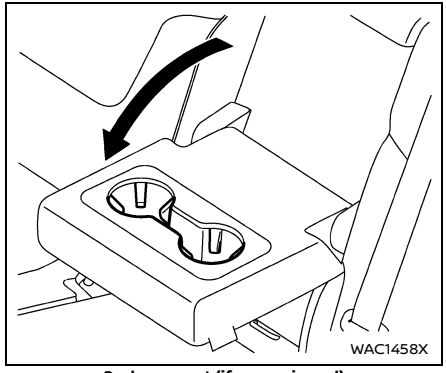

2nd row seat (if so equipped)

The 2nd row center seat backrest can be used as an armrest.

FLEXIBLE SEATING

Basic information

⚠ WARNING

- **Never allow anyone to ride in the cargo area or on the rear seats when they are in the fold-down position. In a collision, people riding in these areas without proper restraints are more likely to be seriously injured or killed.**
- **Do not allow people to ride in any area of your vehicle that is not equipped with seats and seat belts. Be sure everyone in your vehicle is in a seat and using a seat belt properly.**
- **Do not fold down the rear seats when occupants are in the rear seat area or any cargo is on the rear seats.**
- **Head restraints should be adjusted properly as they may provide significant protection against injury in an accident. Always replace and adjust them properly if they have been removed for any reason.**
- **If the head restraints are removed for any reason, they should be securely stored to prevent them from causing injury to passengers or damage to the vehicle in case of sudden braking or an accident.**
- **Properly secure all cargo to help prevent it from sliding or shifting. Do not place cargo higher than the seatbacks. In a sudden stop or collision, unsecured cargo could cause personal injury.**

- **When folding the bench seat seatback down for maximum storage, make sure the seat base is in the latched position by rocking the seat base (for manual seats if so equipped). If the seat base is not properly secured, cargo stored on top of a folded seatback may become a projectile causing personal injury or vehicle damage.**

⚠ CAUTION

- **When folding the 2nd row seat for maximum cargo hauling, be sure that cargo does not contact the center console of the captain's seat (if so equipped) to avoid possible damage to the console.**
- **When folding or returning the seat(s) to the upright position, to avoid injury to yourself and others:**
  - **Make sure that the seat path is clear before moving the seat.**
  - **Be careful not to allow hands or feet to get pinched or pinched in the seat.**
- **Before starting the operation, make sure that the head restraints of the rear seats are in the retracted position.**

NOTE:
Before operating the seat, move the corresponding seat in front of it to a position where it does not contact the operating seat.

Manual folding (if so equipped)

⚠ WARNING

When returning the seatbacks to the upright position, be certain they are completely secured in the latched position. If they are not completely secured, passengers may be injured in an accident or sudden stop.

The 2nd and 3rd row seats can be folded flat to maximize the cargo capacity.

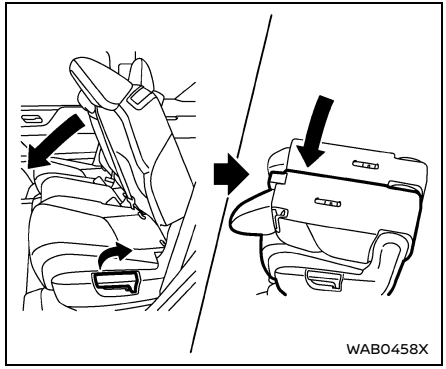

2nd row seats

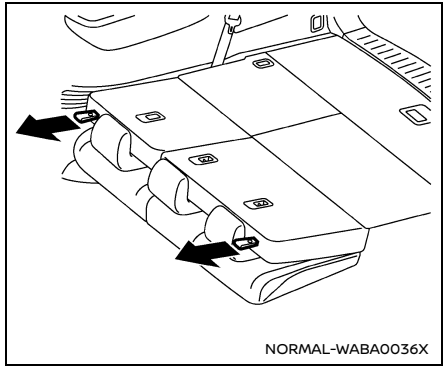

3rd row seats

Pull the lever located on the 2nd row seat or the strap located on the 3rd row seat to fold down the seatback.

Power folding (if so equipped)

The 2nd (if so equipped) and 3rd (if so equipped) row seats can be folded flat to maximize the cargo capacity.

⚠ WARNING

Before starting operation, make sure that there are no passengers or objects in the rear seats. Do not leave the vehicle until the operation is complete.

⚠ CAUTION

- **When operating the rear power seatback return, make sure that the vehicle is stopped and the transmission is in the P (Park) position.**
- **The auto reverse function may not operate depending on the shape or position of obstacles.**

NOTE:

- **Before starting the operation, make sure that the vehicle has been completely stopped. If the vehicle starts moving during the power folding/unfolding operation, the operation will stop.**
- **If the battery voltage is low, the operation may not be completed when other electrical equipment is used with the engine stopped.**
- **If the outside temperature is low or the battery voltage is low, it may not be possible to operate multiple seats at the same time. In such a case, start the engine.**
- **If the system detects that something is pinched, the seat will move to the opposite direction for a short period of time and a beep sounds. The seat will then stop if the system detects that something is pinched again.**
- **The operation will stop in the following situation.**
  - **The vehicle is driven.**
  - **If any of the relevant seat switch/key is operated.**
  - **The auto reverse function is activated.**
- **If the 3rd row seat does not completely fold or return, see "Resetting the seat positions (if so equipped)" (P.29).**
- **After charging or replacing the vehicle battery, make sure that the seats are working properly (the seat stops at the appropriate position and does not reverse) before operating the power folding function.**

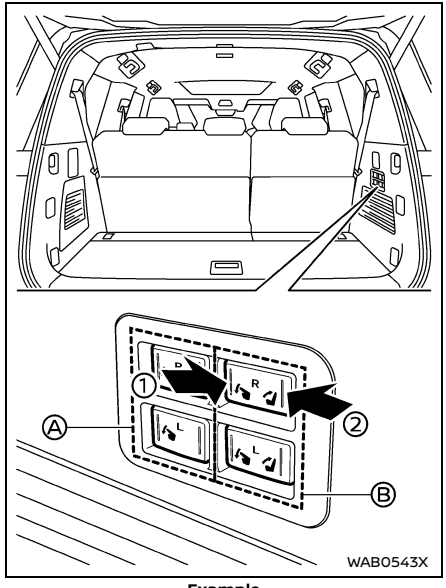

Example

Using cargo room switches:

The switches located on the front side of the vehicle Ⓐ are for the second row seats (if so equipped).

The switches located on the rear side of the vehicle Ⓑ are for the third row seats.

Push the front side of the switch ①. The cor-

responding seatback (R: right side, L: left side) will be folded down automatically.

Push the rear side of the switch ② (if so equipped). The seatback will be returned automatically.

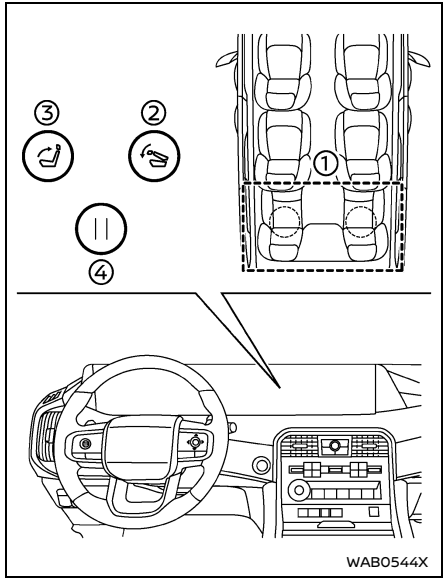

Using touch screen display:

See "Touch screen display" (P.143) or the separate NissanConnect® Owner's Manual for the basic usage of the touch screen display.

While the vehicle has completely stopped, touch ⚙ on the touch screen, then touch "Vehicle" key.

Touch "Seat" key, then touch "Power Folding Rear Seats" key, select desired seat(s) in the ①, then touch fold ② key. The selected seat(s) will fold flat. If all seats are selected, all 3rd row seats will fold flat.

To return the seats, touch return ③ key.

Touch ④ key to stop the seat movement.

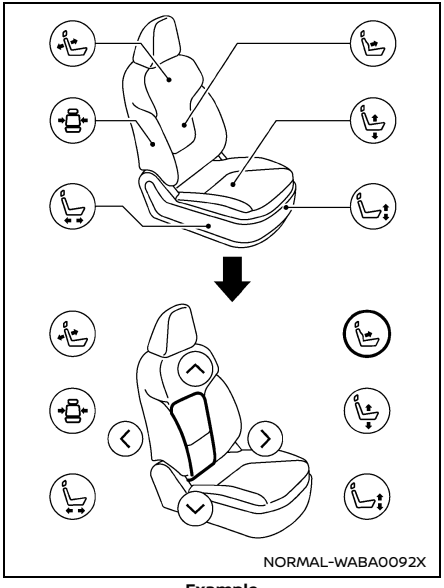

Example

SEAT ADJUSTMENT USING TOUCH SCREEN DISPLAY (if so equipped)

See "Touch screen display" (P.143) or the separate NissanConnect® Owner's Manual for the basic usage of the touch screen display.

The driver's and third row (if so equipped) seats can be operated by using the touch screen display.

Touch ⚙ on the touch screen, then touch "Vehicle" key.

Touch "Seat" key and select desired key to operate the seat.

The following items are available (if the vehicle is equipped with them):

- Massage Settings
- Driver's Seat Pop-up
- Passenger's Seat Pop-up
- Front Power Seat Adjustment
- Power Folding Rear Seats

See "Touch screen display" (P.143) for more details.

NOTE:

- **If the adjustment switch of the corresponding seat is being operated, the seat cannot be operated by the touch screen display.**
- **While the vehicle is driving, operations on the driver's seat using the touch screen display are disabled.**

RESETTING THE SEAT POSITIONS (if so equipped)

Basic information

⚠ WARNING

During the reset operation, the auto reverse function will not be activated as the system cannot detect that something has become pinched. Make sure there is nothing on the seat path or in the direction of seat movement.

The 3rd row power seats memorize their own original seating positions. Therefore, if the seat loses its position (in case of power supply cut off while the seat is in operation, for example), the seat may stop operating in an incorrect position or the auto reverse function may be activated incorrectly.

If a seat stops in an inappropriate position during the following operation, push and hold the relevant seat adjustment switch for more than 1 second to forcefully move the seat to a position.

- During reclining (backward)

Before driving, be sure to reset the original seat positions as described below.

How to reset the original seat positions

The resetting is only available when the

engine is running.

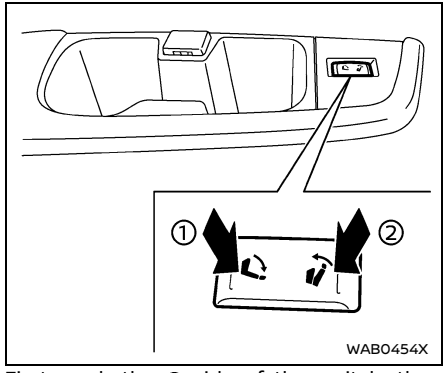

First, push the ② side of the switch, then push the ① side of the switch within 1 second, 10 times in a row.

②→①→②→①→②→①→②→①→②→①

The seat will start moving automatically (reclining). Do not leave the vehicle until the resetting is completed, as the seat moves automatically. If the resetting has completed successfully, a beep sounds twice.

If the system does not function properly after the resetting procedure, the system may need servicing. Have the system checked. It is recommended that you visit a NISSAN dealer for this service.

BASIC INFORMATION

⚠ WARNING

Head restraints/headrests supplement the other vehicle safety systems. They may provide additional protection against injury in certain rear end collisions. Adjustable head restraints/headrests must be adjusted properly, as specified in this section. Check the adjustment after someone else uses the seat. Do not attach anything to the head restraint/headrest stalk, except for genuine NISSAN accessories specifically tested for use with the vehicle's head restraint/headrest stalk. Do not remove the restraint/headrest. Do not use the seat if the head restraint/headrest has been removed. If the head restraint/headrest was removed, reinstall and properly adjust the head restraint/headrest before an occupant uses the seating position. Failure to follow these instructions can reduce the effectiveness of the head restraints/headrests. This may increase the risk of serious injury or death in a collision.

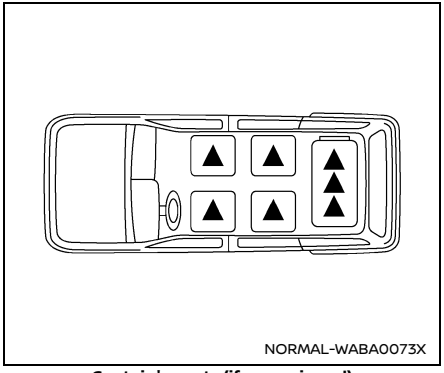

Captain's seats (if so equipped)

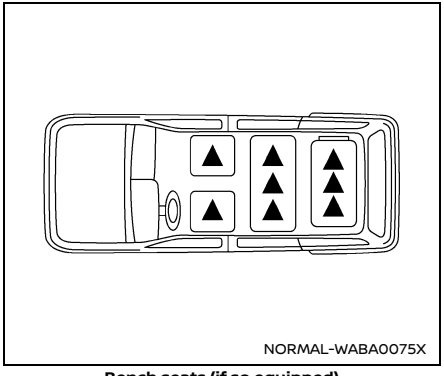

Bench seats (if so equipped)

The illustration shows the seating positions equipped with head restraint/headrest.

▲ Indicates the seating position is equipped with a head restraint.

- Your vehicle is equipped with a head restraint/headrest that may be integrated, adjustable or non-adjustable.
- Adjustable head restraints/headrests have multiple notches along the stalk to lock them in a desired adjustment position.
- The non-adjustable head restraints/headrests have a single locking notch to secure them to the seat frame.
- Proper Adjustment:
  - For the adjustable type, align the head restraint/headrest so the center of your ear is approximately level with the center of the head restraint/headrest.
  - If your ear position is still higher than the recommended alignment, place the head restraint/headrest at the highest position.
- If the head restraint/headrest has been removed, ensure that it is reinstalled and locked in place before riding in that designated seating position.

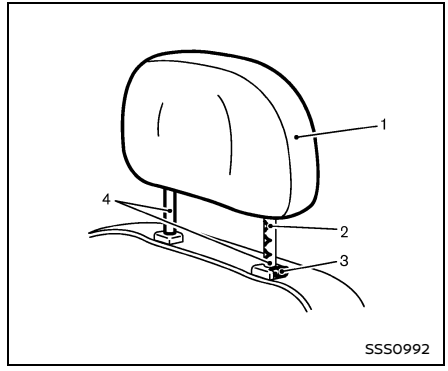

ADJUSTABLE HEAD RESTRAINT/HEADREST COMPONENTS

1. Removable head restraint/headrest
2. Multiple notches
3. Lock knob
4. Stalks

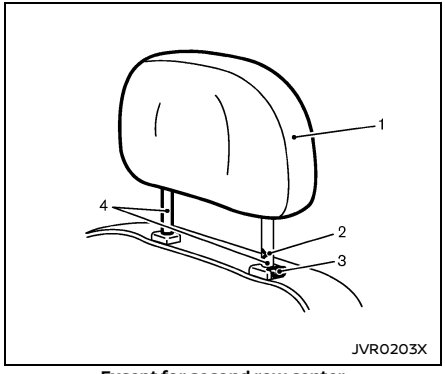

Except for second row center

NON-ADJUSTABLE HEAD RESTRAINT/HEADREST COMPONENTS

1. Removable head restraint/headrest
2. Single notch
3. Lock knob
4. Stalks

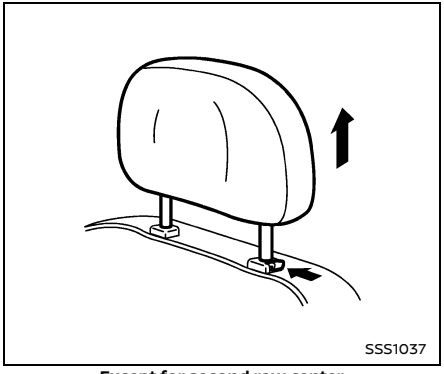

Except for second row center

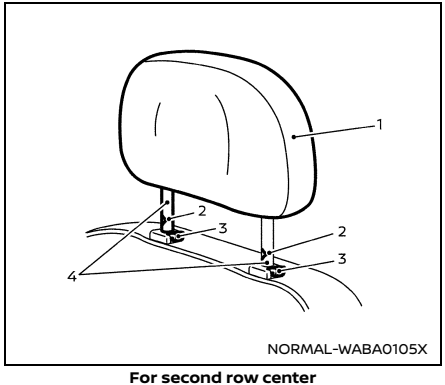

For second row center

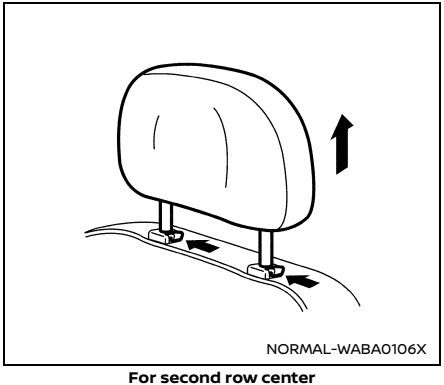

For second row center

REMOVE

CAUTION

- **The front head restraints with a speaker are not designed to be pulled out. The speaker may be damaged if the head restraint is forcibly pulled out.**
- **The 3rd row outer head restraints are not designed to be pulled out.**

Use the following procedure to remove the head restraint/headrest.

1. Pull the head restraint/headrest up to the highest position.
2. **Except for second row center:**
   Push and hold the lock knob.
   For second row center:
   Push and hold the lock knobs on both sides.
3. Remove the head restraint/headrest from the seat.
4. Store the head restraint/headrest properly in a secure place so it is not loose in the vehicle.
5. Reinstall and properly adjust the head restraint/headrest before an occupant uses the seating position.

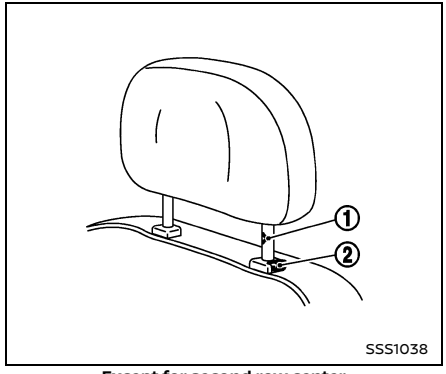

Except for second row center

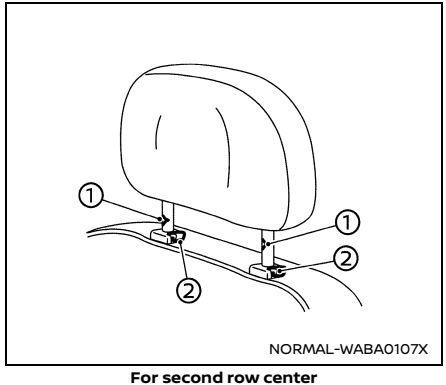

For second row center

INSTALL

1. Align the head restraint/headrest stalks with the holes in the seat. Make sure that the head restraint/headrest is facing the correct direction. The stalk with the notch (notches) ① must be installed in the hole with the lock knob ②.
2. Push and hold the lock knob(s) and push the head restraint/headrest down.
3. Properly adjust the head restraint/headrest before an occupant uses the seating position.

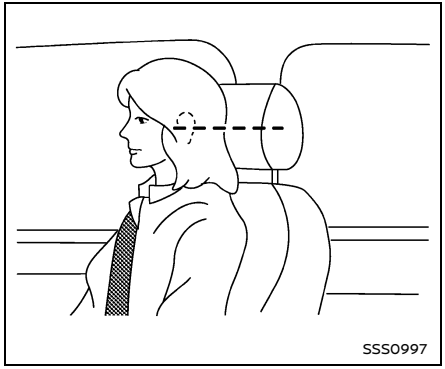

ADJUST

Basic information

For adjustable head restraint/headrest

Adjust the head restraint/headrest so the center is level with the center of your ears. If your ear position is still higher than the recommended alignment, place the head restraint/headrest at the highest position.

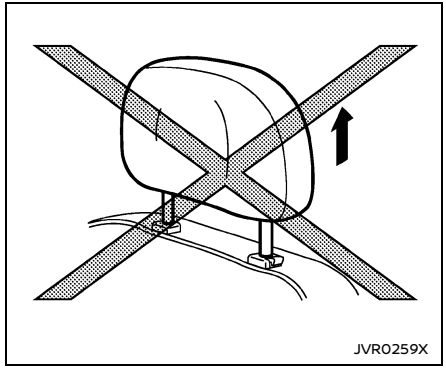

For non-adjustable head restraint/headrest

Make sure the head restraint/headrest is positioned so the lock knob is engaged in the notch before riding in that designated seating position.

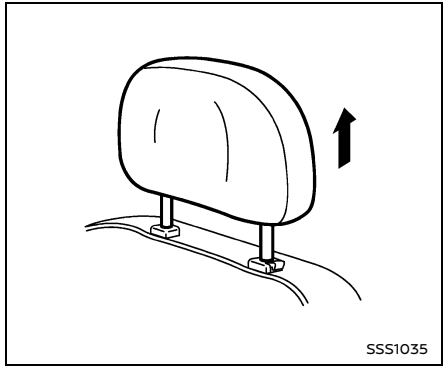

Raise

To raise the head restraint/headrest, pull it up.

Make sure the head restraint/headrest is positioned so the lock knob is engaged in the notch before riding in that designated seating position.

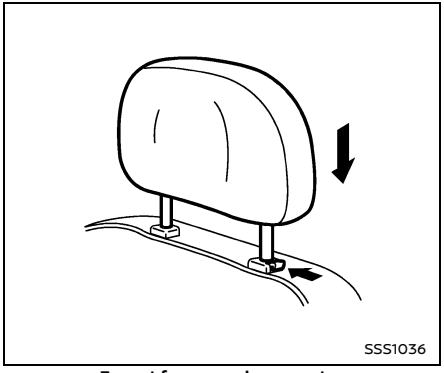

Except for second row center

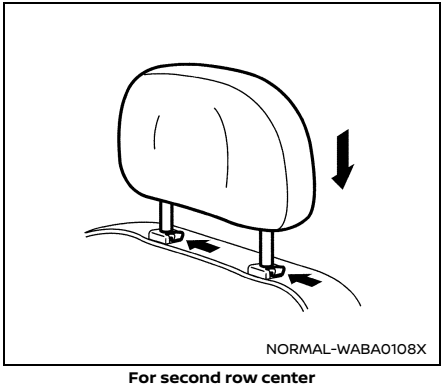

For second row center

Lower

To lower, push and hold the lock knob(s) and push the head restraint/headrest down.

Make sure the head restraint/headrest is positioned so the lock knob is engaged in the notch before riding in that designated seating position.

PRECAUTIONS ON SEAT BELT USAGE

Seat belts are the primary restraint mechanism in the vehicle and can help protect occupants during collisions, whether the air bags deploy, do not deploy, or in multi-impact collisions where the air bags have already deployed.

If you are wearing your seat belt properly adjusted, and you are sitting upright and well back in your seat with both feet on the floor, your chances of being injured or killed in an accident and/or the severity of injury may be greatly reduced. NISSAN strongly encourages you and all of your passengers to buckle up every time you drive, even if your seating position includes a supplemental air bag.

Most U.S. states and Canadian provinces or territories specify that seat belts be worn at all times when a vehicle is being driven.

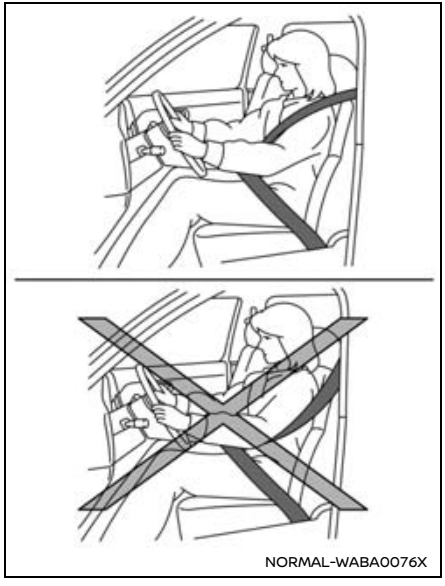

NORMAL-WABA0076X

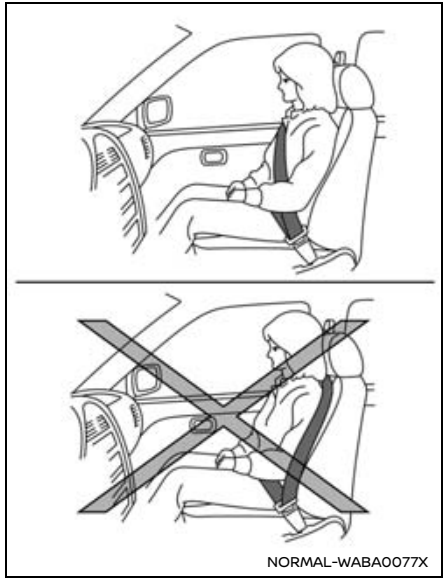

NORMAL-WABA0077X

⚠ WARNING

Wearing your seat belt incorrectly could make your injuries in a collision much worse. You might suffer internal injuries, or you could even slide out of the seat belt. Follow these instructions to wear your seat belt safely and to help keep your passengers safe from serious injury or death:

- **Relying on the air bags alone could lead to more severe injuries in a collision. Every person who drives or rides in this vehicle should always use a seat belt. Children should be properly restrained in the rear seat and, if appropriate, in a child restraint appropriate for the age and size of the child.**
- **The seat belt should be properly adjusted to a snug fit. Failure to do so may reduce the effectiveness of the entire restraint system and increase the chance or severity of injury in an accident. Serious injury or death can occur if the seat belt is not worn properly.**
- **Always route the shoulder belt over your shoulder and across your chest. Never put the belt behind your back, under your arm or across your neck. The belt should be away from your face and neck, but not falling off your shoulder.**

- **Position the lap belt as low and snug as possible AROUND THE HIPS, NOT THE WAIST. A lap belt worn too high could increase the risk of internal injuries in an accident.**
- **Be sure the seat belt tongue is securely fastened to the proper buckle.**
- **Do not wear the seat belt inside out or twisted. Doing so may reduce its effectiveness.**
- **Do not allow more than one person to use the same seat belt.**
- **Never carry more people in the vehicle than there are seat belts.**
- **If the seat belt warning light illuminates continuously or chime continues while the ignition is turned on with all doors closed and all seat belts fastened, it may indicate a malfunction in the system. Have the system checked. It is recommended that you visit a NISSAN dealer for this service.**
- **No changes should be made to the seat belt system. For example, do not modify the seat belt, add material or install devices that may change the seat belt routing or tension. Doing so may affect the operation of the seat belt system. Modifying or tampering with the seat belt system may result in serious personal injury.**
- **Once a seat belt pretensioner has activated, it cannot protect you in another collision, it cannot be reused and must be replaced together with the retractor and buckle as a unit. It is recommended that you visit a NISSAN dealer for this service.**
- **All seat belt assemblies, including retractors and attaching hardware, should be inspected after any collision. It is recommended you visit a NISSAN dealer for this service. NISSAN recommends that all seat belt assemblies in use during a collision be replaced unless the collision was minor and the belts show no damage and continue to operate properly. Seat belt assemblies not in use during a collision should also be inspected and replaced if either damage or improper operation is noted.**
- **All child restraints and attaching hardware should be inspected after any collision. Always follow the restraint manufacturer's inspection instructions and replacement recommendations. The child restraints should be replaced if they are damaged.**

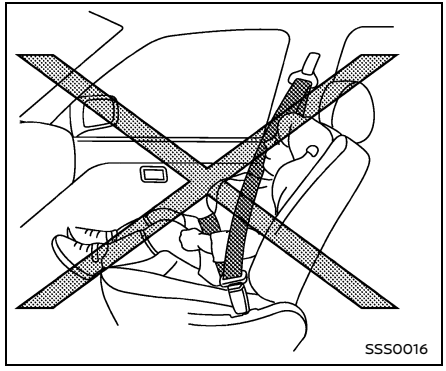
SSS0016

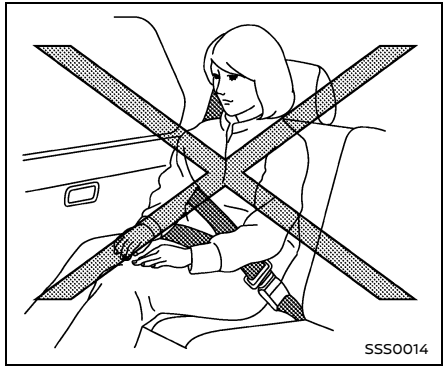
SSS0014

PREGNANT WOMEN

NISSAN recommends that pregnant women use seat belts. The seat belt should be worn snug, and always position the lap belt as low as possible around the hips, not the waist, and place the shoulder belt over your shoulder and across your chest. Never run the lap/shoulder belt over your abdominal area. Contact your doctor for specific recommendations.

INJURED PERSONS

NISSAN recommends that injured persons use seat belts, depending on the injury. Check with your doctor for specific recommendations.

THREE-POINT TYPE SEAT BELT

Basic information

⚠ WARNING

- **Every person who drives or rides in this vehicle should use a seat belt at all times.**
- **Do not ride in a moving vehicle when the seatback is reclined. This can be dangerous. The shoulder belt will not be against your body. In an accident, you could be thrown into it and receive neck or other serious injuries. You could also slide under the lap belt and receive serious internal injuries.**
- **For the most effective protection when the vehicle is in motion, the seat should be upright. Always sit well back and upright in the seat with both feet on the floor and adjust the seat belt properly.**

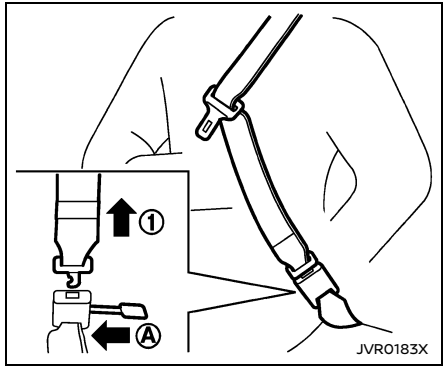

WARNING

Do not allow children to play with the seat belts. Most seating positions are equipped with Automatic Locking Retractor (ALR) mode seat belts. If the seat belt becomes wrapped around a child's neck with the ALR mode activated, the child can be seriously injured or killed if the seat belt retracts and becomes tight. This can occur even if the vehicle is parked. Unbuckle the seat belt to release the child. For the center of the 3rd row seat, the connector tongue ① may also be released. Release the connector tongue by inserting a suitable tool (such as a key) into the connector buckle Ⓐ. If the seat belt cannot be unbuckled or is already unbuckled, release the child by cutting the seat belt with a suitable tool (such as a knife or scissors) to release the seat belt.

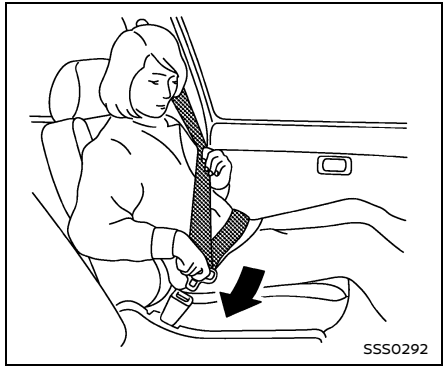

Fastening the seat belts

1. Adjust the seat. (See "Front seats" (P.18), "2nd row seats" (P.20) and "3rd row seats" (P.22).)
2. Slowly pull the seat belt out of the retractor and insert the tongue into the buckle until you hear and feel the latch engage.
   - **The retractor is designed to lock during a sudden stop or on impact. A slow pulling motion permits the belt to move, and allows you some freedom of movement in the seat.**
   - **If the seat belt cannot be pulled from its fully retracted position, firmly pull the belt and release it. Then smoothly pull the belt out of the retractor.**

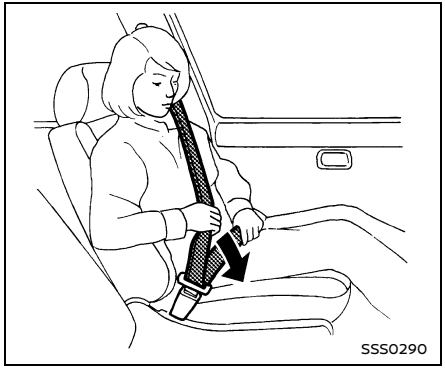

3. Position the lap belt portion **low and snug on the hips** as shown.
4. Pull the shoulder belt portion toward the retractor to take up extra slack. Be sure the shoulder belt is routed over your shoulder and across your chest.

The three-point type seat belts have two modes of operation:

- Emergency Locking Retractor (ELR)
- Automatic Locking Retractor (ALR)

The Emergency Locking Retractor (ELR) mode allows the seat belt to extend and retract to allow the driver and passengers some freedom of movement in the seat. The ELR locks the seat belt when the vehicle slows down rapidly or during impacts.

The Automatic Locking Retractor (ALR) mode (child restraint mode) locks the seat belt for child restraint installation.

When the ALR mode is activated the seat belt cannot be extended again until the seat belt tongue is detached from the buckle and fully retracted. The seat belt returns to the ELR mode after the seat belt fully retracts. For additional information, see "Child restraints" (P.48).

The ALR mode should be used only for child restraint installation. During normal seat belt use by an occupant, the ALR mode should not be activated. If it is activated, it may cause uncomfortable seat belt tension.

⚠ WARNING

When fastening the seat belts, be certain that seatbacks are completely secured in the latched position. If they are not completely secured, passengers may be injured in an accident or sudden stop.

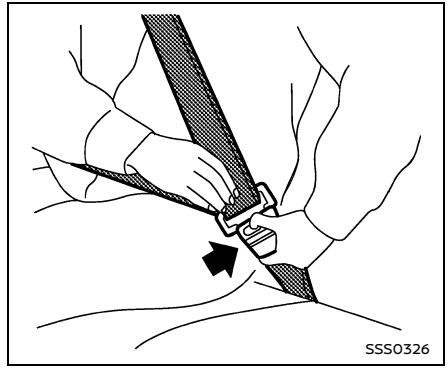

Unfastening the seat belts

To unfasten the seat belt, push the button on the buckle. The seat belt automatically retracts.

Checking seat belt operation

Seat belt retractors are designed to lock seat belt movement by two separate methods:

- When the belt is pulled quickly from the retractor.
- When the vehicle slows down rapidly.

To increase your confidence in the seat belts, check the operation as follows:

- Grasp the shoulder belt and pull forward quickly. The retractor should lock and restrict further belt movement.

If the retractor does not lock during this check, get the system checked. It is recommended you visit a NISSAN dealer for this service, or to learn more about seat belt operation.

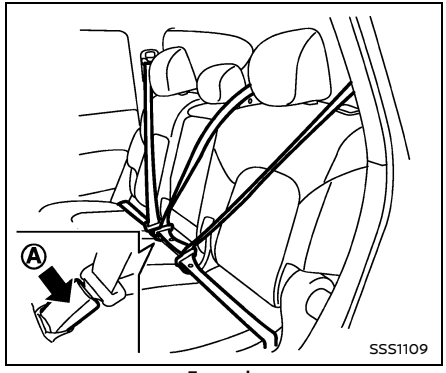

Example

Center of 2nd and 3rd row seats (if so equipped)

Selecting correct set of seat belts:

The center seat belt buckle is identified by the CENTER mark Ⓐ. The center seat belt tongue can be fastened **only** into the center seat belt buckle.

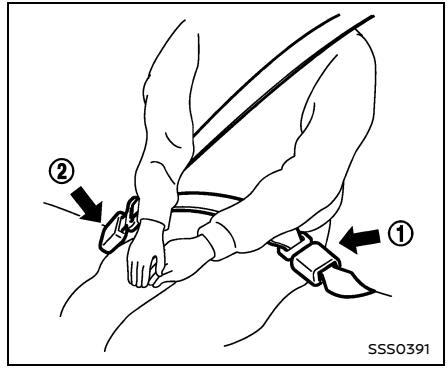

3rd row center seat belt

The 3rd row center seat belt has a connector tongue ① and a seat belt tongue ②. Both the connector tongue and the seat belt tongue must be securely latched for proper seat belt operation.

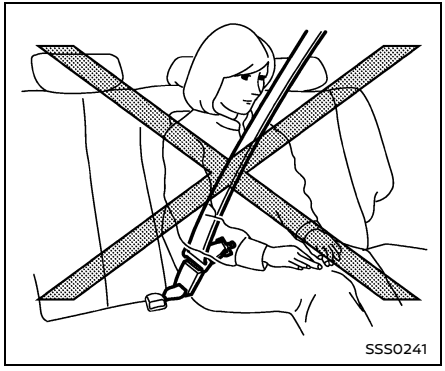
SSS0241

⚠ WARNING

- **Always fasten the connector tongue and the seat belt in the order shown.**
- **Always make sure both the connector tongue and the seat belt tongue are secured when using the seat belt or installing a child restraint. Do not use the seat belt or child restraint with only the seat belt tongue attached. This could result in serious personal injury in case of an accident or a sudden stop.**

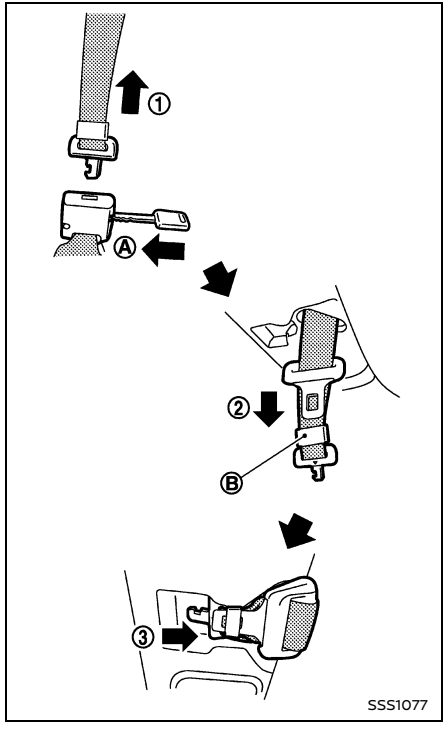

SSS1077

Stowing 3rd row center seat belt:

When folding down the 3rd row seat, the 3rd center seat belt can be retracted into a stowed position.

1. Hold the connector tongue ① so that the seat belt does not retract suddenly when the tongue is released from the connector buckle. Release the connector tongue by inserting a suitable tool such as key Ⓐ into the connector buckle.
2. Store the seat belt tongue into the tongue holder Ⓑ first ②.
3. Store the connector tongue into the retractor base ③.

⚠ WARNING

Do not unfasten the 3rd center seat belt connector except when folding down the 3rd seat.

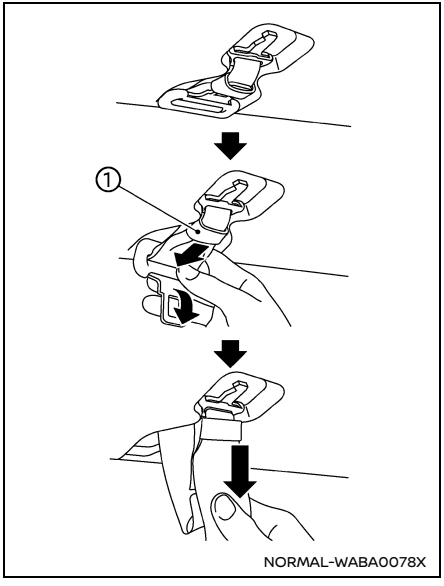

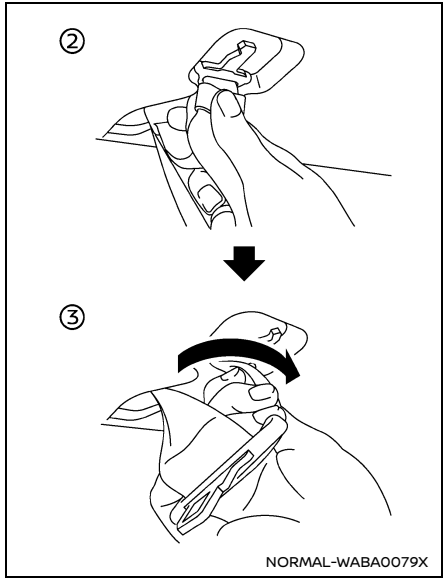

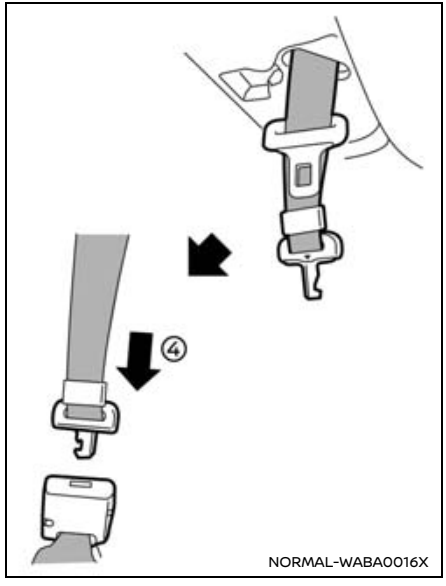

Attaching 3rd row center seat belt:

Always be sure the 3rd center seat belt connector tongue and connector buckle are attached. Disconnect only when folding down the 3rd row seat.

To connect the buckle:

1. Pull out the seat belt tongue from the tongue holder ①, then pull the seat belt tongue down and grip the seat belt.
2. Grip the seat belt near the connector tongue ② and twist it clockwise to release the connector tongue ③.
3. Pull down the connector tongue and the seat belt tongue.
4. Pull the seat belt and fasten the connector buckle until it clicks ④.

The center seat belt connector tongue and buckle are identified by the ▼ and ▲ mark.

The center seat belt connector tongue can be attached only into the 3rd center seat belt connector buckle.

To fasten the seat belt, see "Fastening the seat belts" (P.39).

⚠ WARNING

- **When attaching the 3rd center seat belt connector, be certain that the seatbacks are completely secured in the latched position and the 3rd center seat belt connector is completely secured.**
- **If the 3rd center seat belt connector and the seatbacks are not secured in the correct position, serious personal injury may result in an accident or sudden stop.**

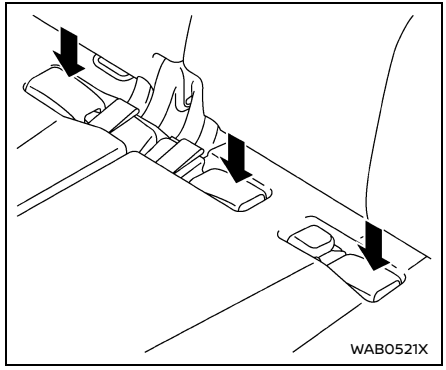

Storing 3rd row seat belt buckles

Before folding down the seat, put the buckles in the storage of the seat cushion to avoid dropping it under the seat cushion.

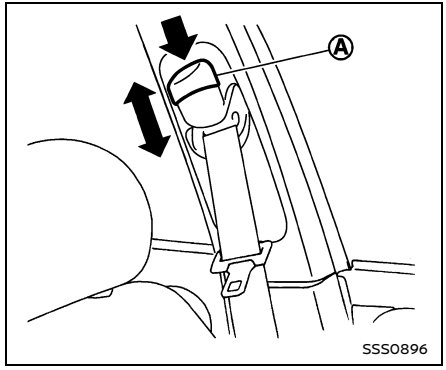

Shoulder belt height adjustment (for front seats)

The shoulder belt anchor height should be adjusted to the position best for you. (See "Precautions on seat belt usage" (P.35).)

To adjust, push the button Ⓐ, and then move the shoulder belt anchor to the desired position, so that the belt passes over the center of the shoulder. The belt should be away from your face and neck, but not falling off of your shoulder. Release the adjustment button to lock the shoulder belt anchor into position.

⚠ WARNING

- **After adjustment, release the adjustment button and try to move the shoulder belt anchor up and down to make sure it is securely fixed in position.**
- **The shoulder belt anchor height should be adjusted to the position best for you. Failure to do so may reduce the effectiveness of the entire restraint system and increase the chance or severity of injury in an accident.**

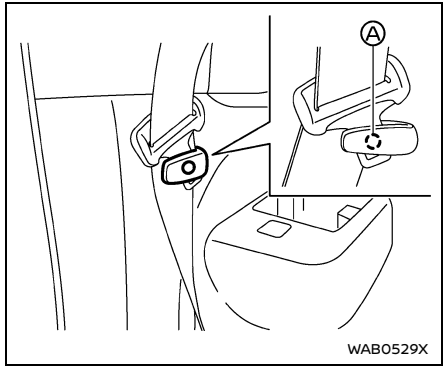

Seat belt hook

When the seat belt is not in use and when folding down the 2nd row seats, hook the 2nd row outer seat belts on the seat belt hooks.

The convex part on the inside of the hook Ⓐ can be used as a place to fit the seat belt tongue.

⚠ WARNING

Before folding up the rear seats, ensure the seat belts are not obstructing the rear seatback latches to avoid damage to the seat belt webbing.

SEAT BELT EXTENDERS

If, because of body size or driving position, it is not possible to properly fit the lap-shoulder belt and fasten it, an extender that is compatible with the installed seat belts is available that can be purchased. The extender adds approximately 8 in (200 mm) of length and may be used for front or rear outboard seating position. It is recommended you visit a NISSAN dealer for assistance with purchasing an extender if an extender is required.

⚠ WARNING

- **It is recommended that only NISSAN seat belt extenders, made by the same company which made the original equipment seat belts, be used with the NISSAN seat belts.**
- **Adults and children who can use the standard seat belt should not use an extender. Such unnecessary use could result in serious personal injury in the event of an accident.**
- **Never use seat belt extenders to install child restraints. If the child restraint is not secured properly, the child could be seriously injured or killed in a collision or a sudden stop.**

SEAT BELT MAINTENANCE

- **To clean the seat belt webbing,** apply a mild soap solution or any solution

recommended for cleaning upholstery or carpets. Then, wipe with a cloth and allow the seat belts to dry in the shade. Do not allow the seat belts to retract until they are completely dry.

- **If dirt builds up in the shoulder belt guide** of the seat belt anchors, the seat belts may retract slowly. Wipe the shoulder belt guide with a clean, dry cloth.
- **Periodically check to see that the seat belt and the metal components** such as buckles, tongues, retractors, flexible wires and anchors work properly. If loose parts, deterioration, cuts or other damage on the webbing is found, the entire seat belt assembly should be replaced.

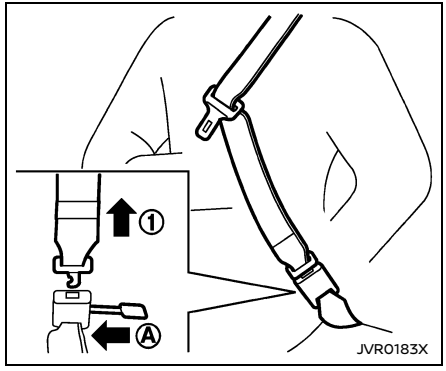

BASIC INFORMATION

⚠ WARNING

Do not allow children to play with the seat belts. Most seating positions are equipped with Automatic Locking Retractor (ALR) mode seat belts. If the seat belt becomes wrapped around a child's neck with the ALR mode activated, the child can be seriously injured or killed if the seat belt retracts and becomes tight. This can occur even if the vehicle is parked. Unbuckle the seat belt to release the child. For the center of the 3rd row seat, the connector tongue ① may also be released. Release the connector tongue by inserting a suitable tool (such as a key) into the connector buckle Ⓐ. If the seat belt cannot be unbuckled or is already unbuckled, release the child by cutting the seat belt with a suitable tool (such as a knife or scissors) to release the seat belt.

Children need adults to help protect them. They need to be properly restrained.

In addition to the general information in this manual, child safety information is available from many other sources, including doctors, teachers, government traffic safety offices, and community organizations. Every child is different, so be sure to learn the best way to transport your child.

There are three basic types of child restraint systems:

- Rear-facing child restraint
- Forward-facing child restraint
- Booster seat

The proper restraint depends on the child's size. Generally, infants up to about 1 year and less than 20 lbs (9 kg) should be placed in rear-facing child restraints. Forward-facing child restraints are available for children who outgrow rear-facing child restraints and are at least 1 year old. Booster seats are used to help position a vehicle lap/shoulder belt on a child who can no longer use a forward-facing child restraint.

⚠ WARNING

Infants and children need special protection. The vehicle's seat belts may not fit them properly. The shoulder belt may come too close to the face or neck. The lap belt may not fit over their small hip bones. In an accident, an improperly fitting seat belt could cause serious or fatal injury. Always use appropriate child restraints.

All U.S. states and Canadian provinces or territories require the use of approved child restraints for infants and small children. See "Child restraints" (P.48).

A child restraint may be secured in the vehicle by using either the LATCH (Lower Anchor and Tethers for CHildren) system or with the vehicle seat belt. See "Child restraints" (P.48) for more information.

NISSAN recommends that all pre-teens and children be restrained in the rear seat. Studies show that children are safer when properly restrained in the rear seat than in the front seat.

This is especially important because your vehicle has a supplemental restraint system (Air bag system) for the front passenger. See "Supplemental restraint system" (P.68).

INFANTS

Infants up to at least 1 year old should be placed in a rear-facing child restraint. NISSAN recommends that infants be placed in child restraints that comply with Federal Motor Vehicle Safety Standards or Canadian Motor Vehicle Safety Standards. You should choose a child restraint that fits your vehicle and always follow the manufacturer's instructions for installation and use.

SMALL CHILDREN

Children that are over 1 year old and weigh at least 20 lbs (9 kg) should remain in a rear-facing child restraint as long as possible up to the height or weight limit of the child restraint. Children who outgrow the height or weight limit of the rear-facing child restraint and are at least 1 year old should be secured in a forward-facing child restraint with a harness. Refer to the manufacturer's instructions for minimum and maximum weight and height recommendations. NISSAN recommends that small children be placed in child restraints that comply with Federal Motor Vehicle Safety Standards or Canadian Motor Vehicle Safety Standards. You should choose a child restraint that fits your vehicle and always follow the manufacturer's instructions for installation and use.

LARGER CHILDREN

Children should remain in a forward-facing child restraint with a harness until they reach the maximum height or weight limit allowed by the child restraint manufacturer.

Once a child outgrows the height or weight limit of the harness-equipped forward-facing child restraint, NISSAN recommends that the child be placed in a commercially available booster seat to obtain proper seat belt fit. For a seat belt to fit properly, the booster seat should raise the child so that the shoulder belt is properly positioned across the chest and the top, middle portion of the shoulder. The shoulder belt should not cross the neck or face and should not fall off the shoulder. The lap belt should lie snugly across the lower hips or upper thighs, not the abdomen.

A booster seat can only be used in seating positions that have a three-point type seat belt. The booster seat should fit the vehicle seat and have a label certifying that it complies with Federal Motor Vehicle Safety Standards or Canadian Motor Vehicle Safety Standards.

A booster seat should be used until the child

can pass the seat belt fit test below:

- Are the child's back and hips against the vehicle seatback?
- Is the child able to sit without slouching?
- Do the child's knees bend easily over the front edge of the seat with feet flat on the floor?
- Can the child safely wear the seat belt (lap belt low and snug across the hips and shoulder belt across mid-chest and shoulder)?
- Is the child able to use the properly adjusted head restraint/headrest?
- Will the child be able to stay in position for the entire ride?


JVR0473X

If you answered no to any of these questions, the child should remain in a booster seat using a three-point type seat belt.

NOTE:
Laws in some communities may follow different guidelines. Check local and state regulations to confirm your child is using the correct restraint system before traveling.

⚠ WARNING

Never let a child stand or kneel on any seat and do not allow a child in the cargo area. The child could be seriously injured or killed in a sudden stop or collision.

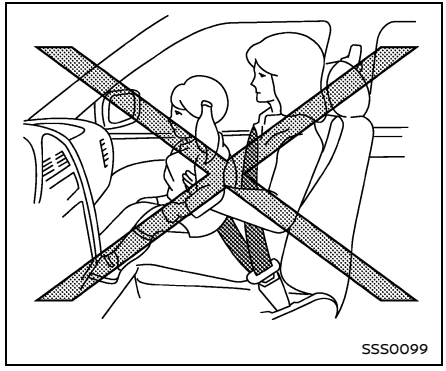
SSS0099

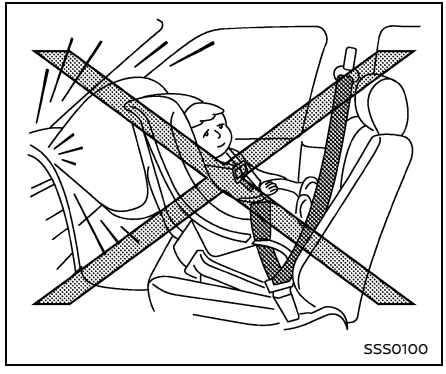
SSS0100

PRECAUTIONS ON CHILD RESTRAINTS

⚠ WARNING

- **Failure to follow the warnings and instructions for proper use and installation of child restraints could result in serious injury or death of a child or other passengers in a sudden stop or collision:**
  - **Always install the child restraint properly and follow the child restraint manufacturer's instructions exactly for installation and use.**
  - **Never install a rear-facing child restraint in the front seat of a vehicle. Only use a rear-facing child restraint in the rear seat. An inflating front passenger air bag could seriously injure or kill a child improperly placed in the front passenger seat.**
  - **Children twelve (12) and under should ride in the rear seat, properly secured in child restraints, booster seats, or seat belts, according to their size.**
  - **Infants and children should never be held on anyone's lap. Even the strongest adult cannot resist the forces of a collision.**
  - **Do not put a seat belt around both a child and another passenger.**
  - **NISSAN recommends that all child restraints be installed in the rear seat. Studies show that children are safer when properly restrained in the rear seat than in the front seat. If you must install a forward-facing child restraint in the front seat, see "Forward-facing child restraint installation using the seat belts" (P.61).**
  - **Be sure to purchase a child restraint that will fit the child and vehicle. Some child restraints may not fit properly in your vehicle.**
  - **Child restraint anchor points are designed to withstand loads from child restraints that are properly fitted.**
  - **Never use the anchor points for adult seat belts, or other items.**
  - **A child restraint with a top tether strap should not be used in the front passenger seat.**
  - **Keep seatbacks as upright as possible after fitting the child restraint.**
  - **Infants and children should always be placed in an appropriate child restraint while in the vehicle.**
- **When the child restraint is not in use, keep it secured with the LATCH system or a seat belt. In a sudden stop or collision, loose objects can injure occupants or damage the vehicle.**
- **A child restraint in a closed vehicle can become very hot. Check the seating surface and buckles before placing a child in the child restraint.**

This vehicle is equipped with a universal child restraint anchor system, referred to as the LATCH (Lower Anchors and Tethers for CHildren) system. Some child restraints include rigid or webbing-mounted attachments that can be connected to these anchors.

For details, see "Lower Anchors and Tethers for CHildren System (LATCH)" (P.50).

If you do not have a LATCH compatible child restraint, the vehicle seat belts can be used.

Several manufacturers offer child restraints for infants and small children of various sizes. When selecting any child restraint, keep the following points in mind:

- Choose only a restraint with a label certifying that it complies with Federal Motor Vehicle Safety Standard 213 or Canadian Motor Vehicle Safety Standard 213.
- Check the child restraint in your vehicle to be sure it is compatible with the vehicle's seat and seat belt system.
- If the child restraint is compatible with your vehicle, place your child in the child

restraint and check the various adjustments to be sure the child restraint is compatible with your child. Choose a child restraint that is designed for your child's height and weight. Always follow all recommended procedures.

- If the combined weight of the child and child restraint is less than 65 lbs (29.5 kg), you may use either the LATCH lower anchors or the seat belt to install the child restraint (not both at the same time).
- If the combined weight of the child and child restraint is greater than 65 lbs (29.5 kg), use the vehicle's seat belt (not the lower anchors) to install the child restraint.
- Be sure to follow the child restraint manufacturer's instructions for installation.

All U.S. states and Canadian provinces or territories require that infants and small children be restrained in an approved child restraint at all times while the vehicle is being operated. Canadian law requires the top tether strap on forward-facing child restraints be secured to the designated anchor point on the vehicle.

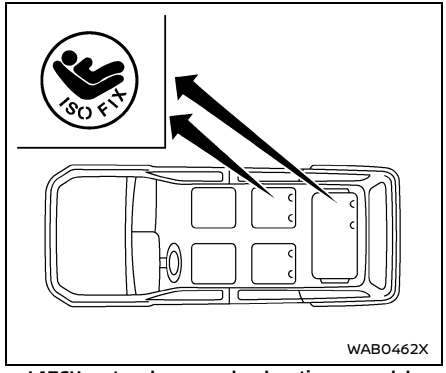

LATCH system lower anchor locations - models with 2nd row captain's seats

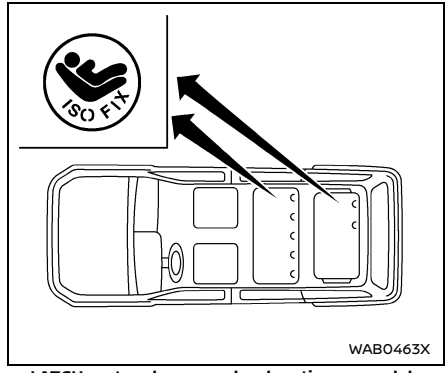

LATCH system lower anchor locations - models with 2nd row bench seat

Lower Anchors and Tethers for CHildren System (LATCH)

Basic information

Your vehicle is equipped with special anchor points that are used with the LATCH (Lower Anchors and Tethers for CHildren) system compatible child restraints. This system may also be referred to as the ISOFIX or ISOFIX compatible system. With this system, you do not have to use a vehicle seat belt to secure the child restraint unless the combined weight of the child and child restraint exceeds 65 lbs (29.5 kg). If the combined weight of the child and child restraint is greater than 65 lbs (29.5 kg), use the vehi-

cle's seat belt (not the lower anchors) to install the child restraint. Be sure to follow the child restraint manufacturer's instructions for installation.

The LATCH lower anchor points are provided to install child restraints in the following positions only:

- 2nd row captain's seats and 3rd row right outboard seat (if so equipped)
- 2nd row bench seats and 3rd row right outboard seat (if so equipped)

LATCH lower anchor

⚠ WARNING

Failure to follow the warnings and instructions for proper use and installation of child restraints could result in serious injury or death of a child or other passengers in a sudden stop or collision:

- **Only attach LATCH system compatible child restraints to the Lower Anchors shown in the illustration. For additional information, refer to the following sections of this Owner's Manual for installation guidance.**
- **Inspect the lower anchors by inserting your fingers into the lower anchor area. Feel to make sure there are no obstructions over the anchors such as seat belt webbing or seat cushion material. The child restraint will not be secured properly if the lower anchors are obstructed.**
- **Child restraint anchorages are designed to withstand only those loads imposed by correctly fitted child restraints. Under no circumstances are they to be used to attach adult seat belts, or other items or equipment to the vehicle. Doing so could damage the child restraint anchorages. The child restraint will not be properly installed using the damaged anchorage, and a child could be seriously injured or killed in a collision.**

LATCH lower anchor location

The LATCH lower anchor points are provided to install child restraints in the rear seats. **Do not attempt to install a child restraint in the center and left outboard seating positions simultaneously using the LATCH lower anchors (for models with 2nd row bench seat).**

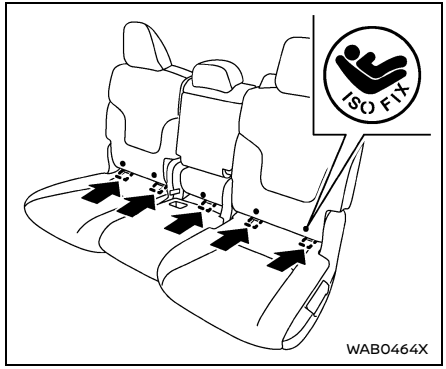

2nd row bench seat (if so equipped)

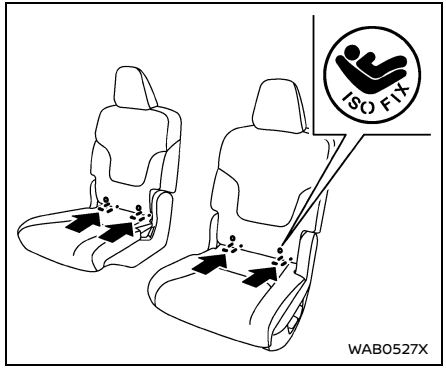

2nd row captain's seats (if so equipped)

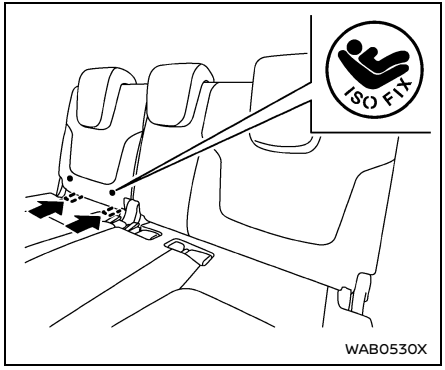

3rd row right outboard seat

The LATCH lower anchor points are located just under the ISOFIX symbols at the bottom of the rear seat cushions.

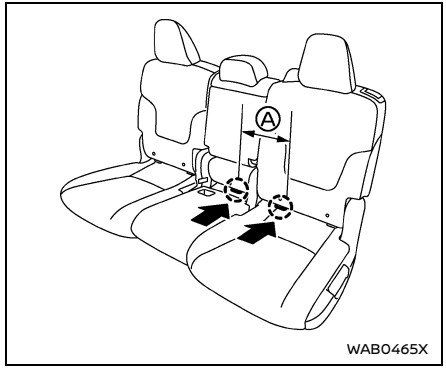

LATCH in the 2nd row center seating position (if so equipped)

A 5th LATCH anchor can be found between the outboard LATCH anchor pairs. It is specifically designed to be used together with the inboard LATCH anchor on the driver's side, in order to install a CRS in the rear center seating position.

These anchors utilize standard LATCH anchor spacing, Ⓐ of 11.02 in (280mm).

⚠ WARNING

Never attach two CRS attachments to the same LATCH anchor. This may overload the anchor in a collision, which could increase the risk of the occupant's serious injury or death.

When installing the CRS in the 2nd row center seating position with the inboard LATCH anchors, be careful to ensure any occupant or CRS in the outboard seating positions is properly restrained using the vehicle seat belt and there is no interference with the center CRS installation. If the outboard occupants cannot be properly restrained, consider using the vehicle seat belt to restrain the CRS in the center seating position, or moving the CRS to another position instead.

When installing a CRS in the center seating position, use the seat back recline feature to align the left and right sides of the seat back, creating one evenly reclined surface. Never install a CRS in the center seating position when one part of the seat back is further reclined than the other. This may create an unstable surface on which to install the CRS. Failure to evenly recline the seat backs before CRS installation could increase the risk of the occupant's serious injury or death. Remember to recheck that the CRS is properly installed any time the seats are reclined or adjusted.

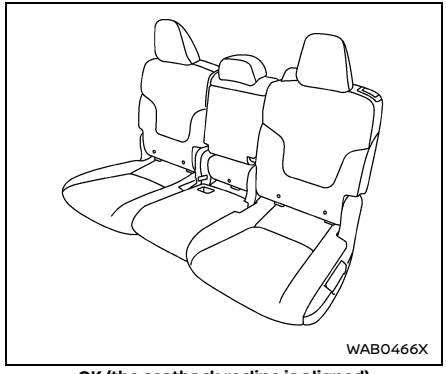

OK (the seatback recline is aligned)

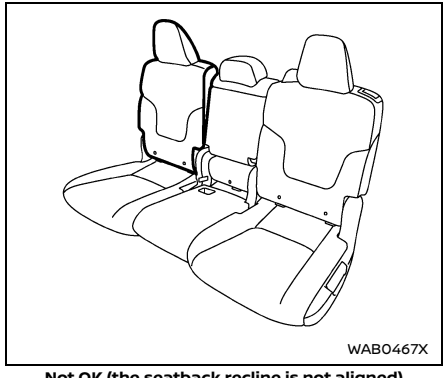

Not OK (the seatback recline is not aligned)

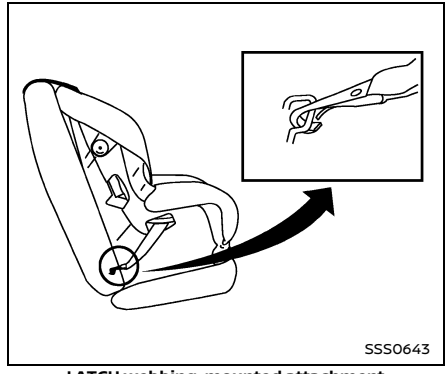

LATCH webbing-mounted attachment

Installing child restraint LATCH lower anchor attachments

LATCH compatible child restraints include two rigid or webbing-mounted attachments that can be connected to two anchors located at certain seating positions in your vehicle. With this system, you do not have to use a vehicle seat belt to secure the child restraint. Check your child restraint for a label stating that it is compatible with LATCH. This information may also be in the instructions provided by the child restraint manufacturer.

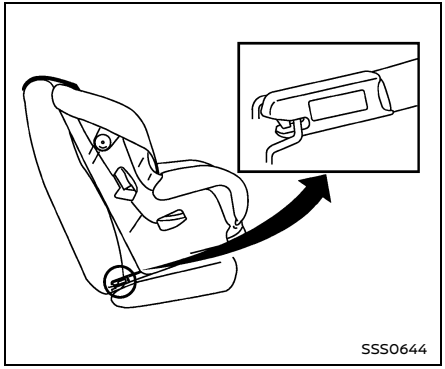

LATCH rigid-mounted attachment

When installing a child restraint, carefully read and follow the instructions in this manual and those supplied with the child restraint.

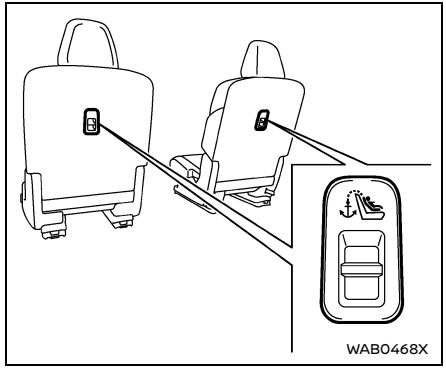

2nd row captain's seat

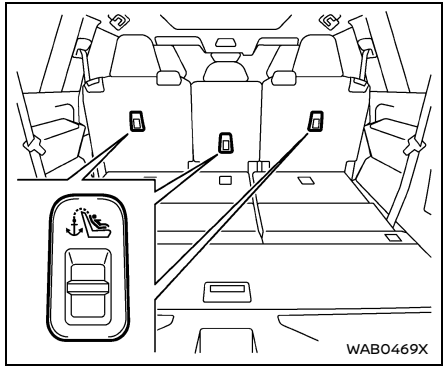

2nd row bench seat

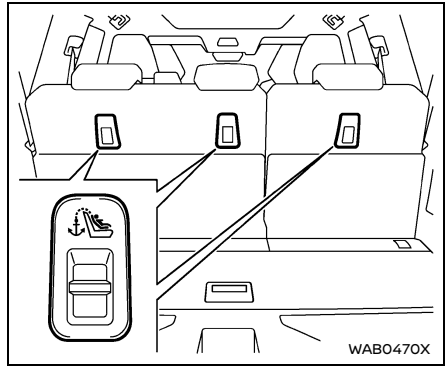

3rd row seat

TOP TETHER ANCHOR

Basic information

If the manufacturer of your child restraint requires the use of a top tether strap, it must be secured to an anchor point.

⚠ WARNING

- **Child restraint anchorages are designed to withstand only those loads imposed by correctly fitted child restraints. Under no circumstances are they to be used to attach adult seat belts, or other items or equipment to the vehicle. Doing so could damage the child restraint anchorages. The child restraint will not be properly installed using the damaged anchorage, and a child could be seriously injured or killed in a collision.**
- **Properly secure cargo and do not allow it to contact the top tether strap when it is attached to the top tether anchor. Cargo that is not properly secured or cargo that contacts the top tether strap may damage the top tether strap during a collision. Your child could be seriously injured or killed in a collision if the child restraint top tether strap is damaged.**
- **Improper installation or failure to properly secure a child restraint can lead to failure of the restraint. The child could be badly injured or killed.**

Top tether anchor point locations

Anchor points are located in the following locations:

- 2nd row bench seat (if so equipped) on the seatback as shown.
- 2nd row captain's seats (if so equipped) on the seatback as shown.
- 3rd row seat on the seatback as shown.

If you have any questions when installing a top tether strap child restraint on the rear seat, it is recommended you visit a NISSAN dealer for this service.

REAR-FACING CHILD RESTRAINT INSTALLATION USING LATCH

Refer to all Warnings and Cautions in the "Child safety" and "Child restraints" sections before installing a child restraint.

Do not use the lower anchors if the combined weight of the child and the child restraint exceeds 65 lbs (29.5 kg). If the combined weight of the child and the child restraint is greater than 65 lbs (29.5 kg), use the vehicle's seat belt (not the lower anchors) to install the child restraint. Be sure to follow the child restraint manufacturer's instructions for installation.

Follow these steps to install a rear-facing child restraint in the 2nd row seats using the LATCH system:

1. Position the child restraint on the seat. Always follow the child restraint manufacturer's instructions.

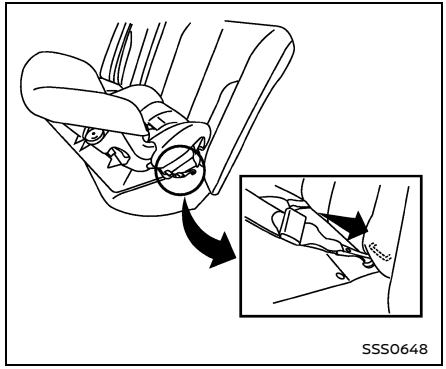

Rear-facing web-mounted — step 2

2. Secure the child restraint anchor attachments to the LATCH lower anchors. Check to make sure the LATCH attachment is properly attached to the lower anchors.

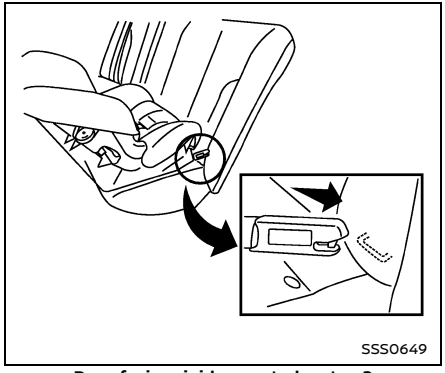

Rear-facing rigid-mounted — step 2

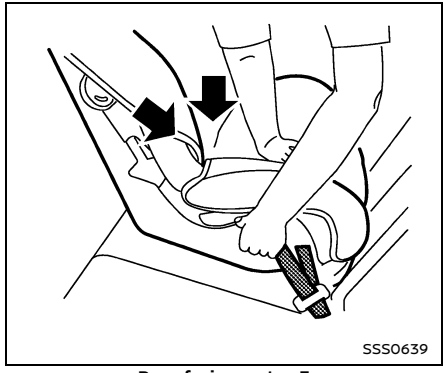

Rear-facing — step 3

3. For child restraints that are equipped with webbing-mounted attachments, remove any additional slack from the anchor attachments. Press downward and rearward firmly in the center of the child restraint with your hand to compress the vehicle seat cushion and seatback while tightening the webbing of the anchor attachments.

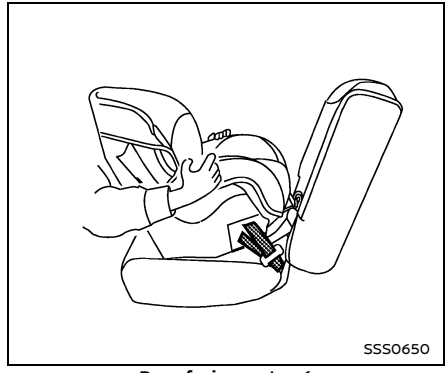

Rear-facing — step 4

4. After attaching the child restraint, test it before you place the child in it. Push it from side to side while holding the child restraint near the LATCH attachment path. The child restraint should not move more than 1 inch (25 mm), from side to side. Try to tug it forward and check to see if the LATCH attachment holds the restraint in place. If the restraint is not secure, tighten the LATCH attachment as necessary, or put the restraint in another seat and test it again. You may need to try a different child restraint or try installing by using the vehicle seat belt (if applicable). Not all child restraints fit in all types of vehicles.
5. Check to make sure the child restraint is properly secured prior to each use. If the

child restraint is loose, repeat steps 1 through 4.

REAR-FACING CHILD RESTRAINT INSTALLATION USING THE SEAT BELTS

⚠ WARNING

- **The three-point seat belt with Automatic Locking Retractor (ALR) must be used when installing a child restraint. Failure to use the ALR mode will result in the child restraint not being properly secured. The restraint could tip over or be loose and cause injury to a child in a sudden stop or collision. Also, it can change the operation of the front passenger air bag. See "Front passenger air bag and status light" (P.76).**
- **When installing a child restraint system in the 3rd center seat position, both the center seat belt connector tongue and buckle tongue must be secured. See "3rd row center seat belt" (P.41).**

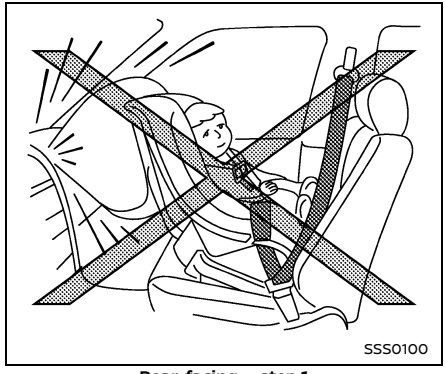

Rear-facing — step 1

Refer to all Warnings and Cautions in the "Child safety" (P.46) and "Child restraints" (P.48) before installing a child restraint.

Do not use the lower anchors if the combined weight of the child and the child restraint exceeds 65 lbs (29.5 kg). If the combined weight of the child and the child restraint is greater than 65 lbs (29.5 kg), use the vehicle's seat belt (not the lower anchors) to install the child restraint. Be sure to follow the child restraint manufacturer's instructions for installation.

Follow these steps to install a rear-facing child restraint using the vehicle seat belts in the rear seats:

1. **Child restraints for infants must be used in the rear-facing direction and therefore must not be used in the front seat.** Position the child restraint on the seat. Always follow the restraint manufacturer's instructions.

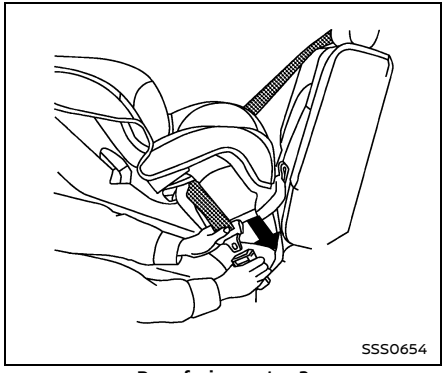

Rear-facing — step 2

2. Route the seat belt tongue through the child restraint and insert it into the buckle until you hear and feel the latch engage. Be sure to follow the child restraint manufacturer's instructions for belt routing.

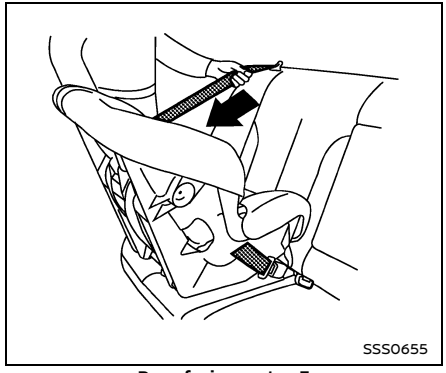

Rear-facing — step 3

3. Pull the shoulder belt until the belt is fully extended. At this time, the seat belt retractor is in the Automatic Locking Retractor (ALR) mode (child restraint mode). It reverts to the Emergency Locking Retractor (ELR) mode when the seat belt is fully retracted.

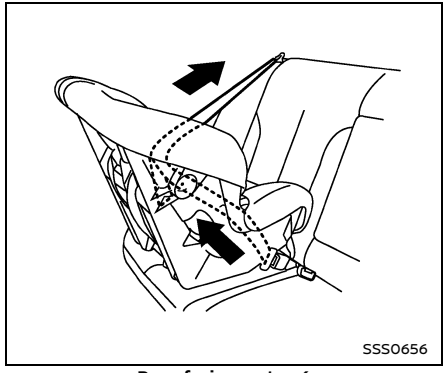

Rear-facing — step 4

4. Allow the seat belt to retract. Pull up on the shoulder belt to remove any slack in the belt.

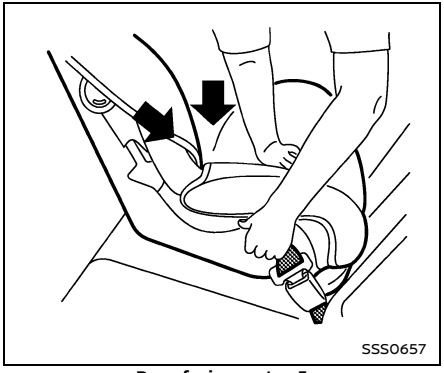

Rear-facing — step 5

5. Remove any additional slack from the seat belt; press downward and rearward firmly in the center of the child restraint to compress the vehicle seat cushion and seatback while pulling up on the seat belt.

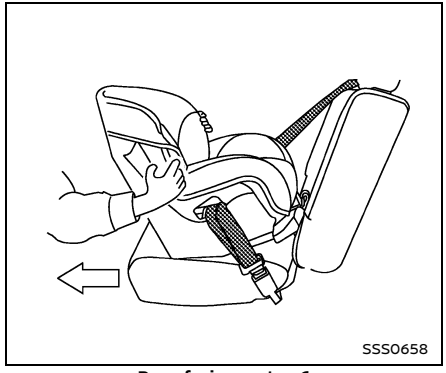

Rear-facing — step 6

6. After attaching the child restraint, test it before you place the child in it. Push it from side to side while holding the child restraint near the seat belt path. The child restraint should not move more than 1 inch (25 mm), from side to side. Try to tug it forward and check to see if the belt holds the restraint in place. If the restraint is not secure, tighten the seat belt as necessary, or put the restraint in another seat and test it again. You may need to try a different child restraint. Not all child restraints fit in all types of vehicles.
7. Check to make sure that the child restraint is properly secured prior to each use. If the seat belt is not locked, repeat steps 1 through 6.

After the child restraint is removed and the seat belt fully retracted, the ALR mode (child restraint mode) is canceled.

FORWARD-FACING CHILD RESTRAINT INSTALLATION USING LATCH

Refer to all Warnings and Cautions in the "Child safety" and "Child restraints" sections before installing a child restraint.

Do not use the lower anchors if the combined weight of the child and the child restraint exceeds 65 lbs (29.5 kg). If the combined weight of the child and the child restraint is greater than 65 lbs (29.5 kg), use the vehicle's seat belt (not the lower anchors) to install the child restraint. Be sure to follow the child restraint manufacturer's instructions for installation.

Follow these steps to install a forward-facing child restraint using the LATCH system:

1. Position the child restraint on the seat. Always follow the child restraint manufacturer's instructions.

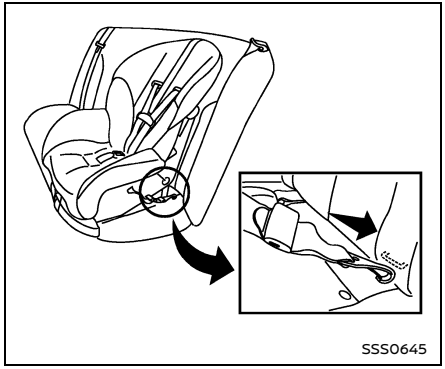

Forward-facing web-mounted — step 2

2. Secure the child restraint anchor attachments to the LATCH lower anchors. Check to make sure the LATCH attachment is properly attached to the lower anchors.

   If the child restraint is equipped with a top tether strap, route the top tether strap and secure the tether strap to the tether anchor point. See "Installing top tether strap" (P.64). Do not install child restraints that require the use of a top tether strap in seating positions that do not have a top tether anchor.

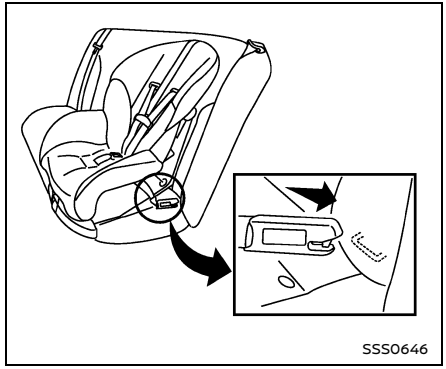

Forward-facing rigid-mounted — step 2

3. The back of the child restraint should be secured against the vehicle seatback.

   If necessary, adjust or remove the head restraint to obtain the correct child restraint fit. If the head restraint is removed, store it in a secure place. **Be sure to reinstall the head restraint when the child restraint is removed.** See "Head restraints/headrests" (P.30) for head restraint adjustment information.

   If the seating position does not have an adjustable head restraint or a headrest and it is interfering with the proper child restraint fit, try another seating position or a different child restraint.

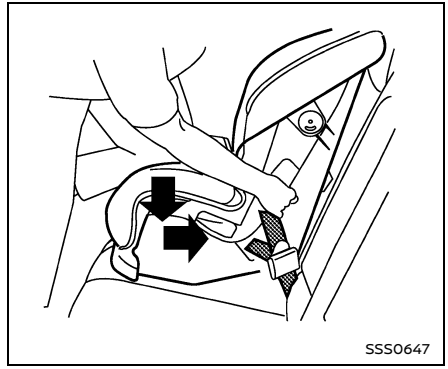

Forward-facing — step 4

4. For child restraints that are equipped with webbing-mounted attachments, remove any additional slack from the anchor attachments. Press downward and rearward firmly in the center of the child restraint with your knee to compress the vehicle seat cushion and seatback while tightening the webbing of the anchor attachments.
5. Tighten the tether strap according to the manufacturer's instructions to remove any slack.

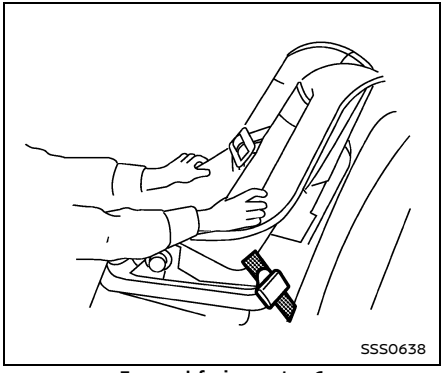

Forward-facing — step 6

6. After attaching the child restraint, test it before you place the child in it. Push it from side to side while holding the child restraint near the LATCH attachment path. The child restraint should not move more than 1 inch (25 mm), from side to side. Try to tug it forward and check to see if the LATCH attachment holds the restraint in place. If the restraint is not secure, tighten the LATCH attachment as necessary, or put the restraint in another seat and test it again. You may need to try a different child restraint. Not all child restraints fit in all types of vehicles.
7. Check to make sure the child restraint is properly secured prior to each use. If the child restraint is loose, repeat steps 1 through 6.

FORWARD-FACING CHILD RESTRAINT INSTALLATION USING THE SEAT BELTS

⚠ WARNING

- **The three-point seat belt with Automatic Locking Retractor (ALR) must be used when installing a child restraint. Failure to use the ALR mode will result in the child restraint not being properly secured. The restraint could tip over or be loose and cause injury to a child in a sudden stop or collision. Also, it can change the operation of the front passenger air bag. See "Front passenger air bag and status light" (P.76).**
- **When installing a child restraint system in the 3rd center position, both the center seat belt connector tongue and buckle tongue must be secured. See "3rd row center seat belt" (P.41).**

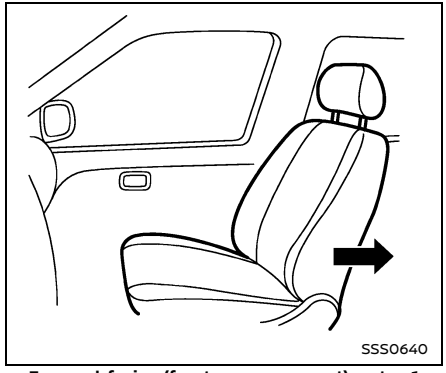

Forward-facing (front passenger seat) — step 1

Refer to all Warnings and Cautions in the "Child safety" and "Child restraints" sections before installing a child restraint.

Do not use the lower anchors if the combined weight of the child and the child restraint exceeds 65 lbs (29.5 kg). If the combined weight of the child and the child restraint is greater than 65 lbs (29.5 kg), use the vehicle's seat belt (not the lower anchors) to install the child restraint. Be sure to follow the child restraint manufacturer's instructions for installation.

Follow these steps to install a forward-facing child restraint using the vehicle seat belt in the rear seats or in the front passenger seat:

1. **If you must install a child restraint in the front seat, it should be placed in a**

forward-facing direction only. Move the seat to the rearmost position. Child restraints for infants must be used in the rear-facing direction and, therefore, must not be used in the front seat.

2. Position the child restraint on the seat. Always follow the child restraint manufacturer's instructions.

   The back of the child restraint should be secured against the vehicle seatback.

   If necessary, adjust or remove the head restraint or headrest to obtain the correct child restraint fit. If the head restraint or headrest is removed, store it in a secure place. **Be sure to reinstall the head restraint or headrest when the child restraint is removed.** See "Head restraints/headrests" (P.30) for head restraint or headrest adjustment, removal and installation information.

   If the seating position does not have an adjustable head restraint or a headrest and it is interfering with the proper child restraint fit, try another seating position or a different child restraint.

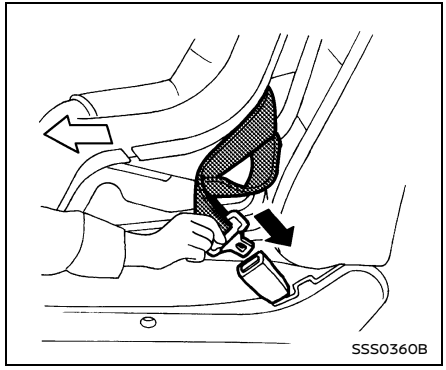

Forward-facing — step 3

3. Route the seat belt tongue through the child restraint and insert it into the buckle until you hear and feel the latch engage. Be sure to follow the child restraint manufacturer's instructions for belt routing.

   If the child restraint is equipped with a top tether strap, route the top tether strap and secure the tether strap to the tether anchor point (rear seat installation only). See "Installing top tether strap" (P.64). Do not install child restraints that require the use of a top tether strap in seating positions that do not have a top tether anchor.

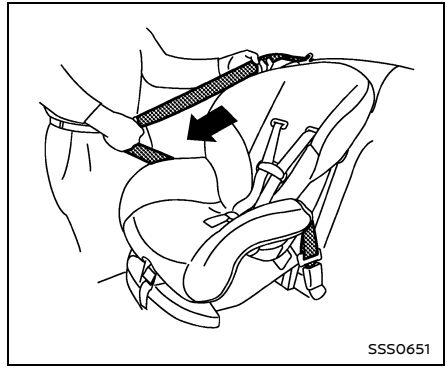

Forward-facing — step 4

4. Pull the shoulder belt until the belt is fully extended. At this time, the seat belt retractor is in the Automatic Locking Retractor (ALR) mode (child restraint mode). It reverts to Emergency Locking Retractor (ELR) mode when the seat belt is fully retracted.

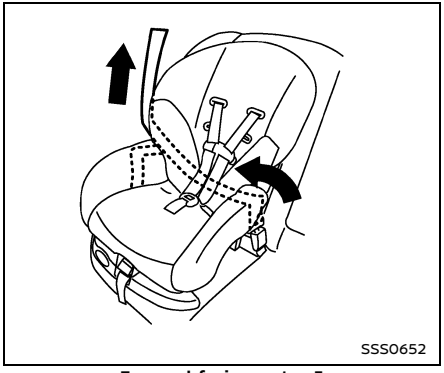

Forward-facing — step 5

5. Allow the seat belt to retract. Pull up on the shoulder belt to remove any slack in the belt.

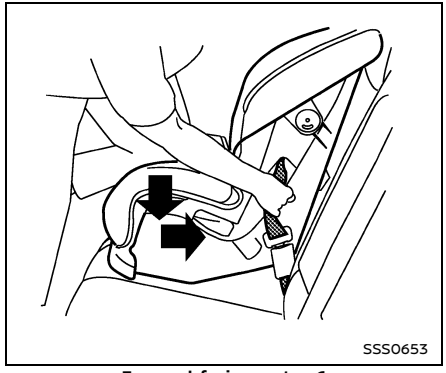

Forward-facing — step 6

6. Remove any additional slack from the seat belt; press downward and rearward firmly in the center of the child restraint with your knee to compress the vehicle seat cushion and seatback while pulling up on the seat belt.
7. Tighten the tether strap according to the manufacturer's instructions to remove any slack.

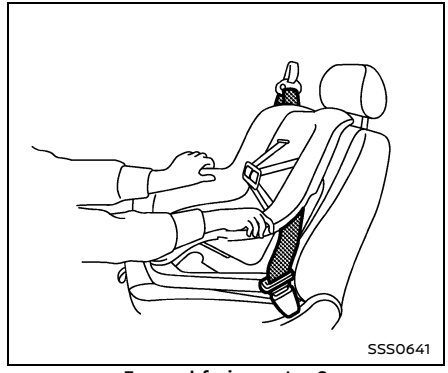

Forward-facing — step 8

8. After attaching the child restraint, test it before you place the child in it. Push it from side to side while holding the child restraint near the seat belt path. The child restraint should not move more than 1 inch (25 mm), from side to side. Try to tug it forward and check to see if the belt holds the restraint in place. If the restraint is not secure, tighten the seat belt as necessary, or put the restraint in another seat and test it again. You may need to try a different child restraint. Not all child restraints fit in all types of vehicles.
9. Check to make sure the child restraint is properly secured prior to each use. If the seat belt is not locked, repeat steps 2 through 8.



Forward-facing — step 10

10. If the child restraint is installed in the front passenger seat, place the ignition switch in the ON position. The front passenger air bag status light should illuminate. If this light is not illuminated, see "Front passenger air bag and status light" (P.76). **Move the child restraint to another seating position.** Have the system checked. It is recommended you visit a NISSAN dealer for this service.

After the child restraint is removed and the seat belt is fully retracted, the ALR mode (child restraint mode) is canceled.

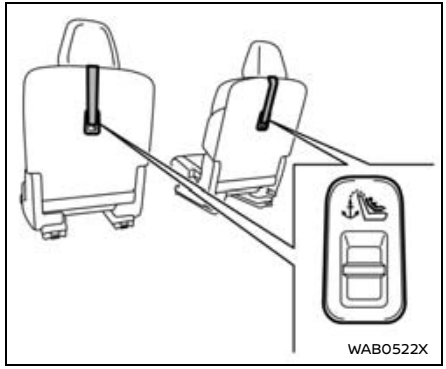

2nd row captain's seat

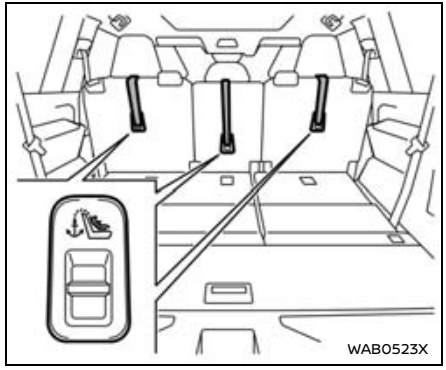

2nd row bench seat

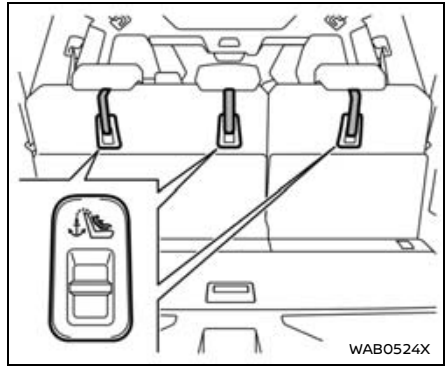

3rd row seat

INSTALLING TOP TETHER STRAP

First, secure the child restraint with the LATCH lower anchors (2nd row and 3rd row right outboard seating positions only) or the seat belt, as applicable.

1. If necessary, raise or remove the head restraint or headrest to position the top tether strap over the top of the seatback. If the head restraint or headrest is removed, store it in a secure place. Be sure to reinstall the head restraint or headrest when the child restraint is removed. See "Head restraints/headrests" (P.30) for head restraint or headrest adjustment, removal and installation information.

2. Secure the tether strap to the tether anchor point on the back of each seatback behind the child restraint.
3. Tighten the tether strap according to the manufacturer's instructions to remove any slack. Make sure the head restraint or headrest does not contact the top tether strap.

If you have any questions when installing a top tether strap on the rear seat, it is recommended you visit a NISSAN dealer for this service.

BOOSTER SEATS

Precautions on booster seats

⚠ WARNING

If a booster seat and seat belt are not used properly, the risk of a child being injured or killed in a sudden stop or collision greatly increases:

- **Make sure the shoulder portion of the belt is away from the child's face and neck and the lap portion of the belt does not cross the stomach.**
- **Make sure the shoulder belt is not behind the child or under the child's arm.**
- **A booster seat must only be installed in a seating position that has a lap/shoulder belt.**

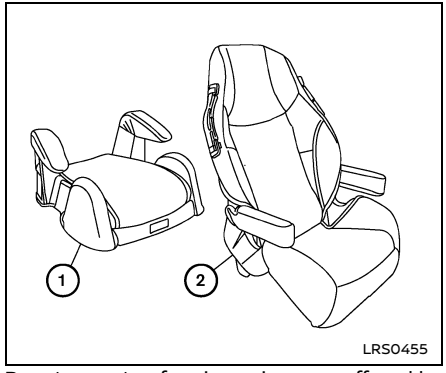

LRS0455

Booster seats of various sizes are offered by several manufacturers. When selecting any booster seat, keep the following points in mind:

- Choose only a booster seat with a label certifying that it complies with Federal Motor Vehicle Safety Standard 213 or Canadian Motor Vehicle Safety Standard 213.
- Check the booster seat in your vehicle to be sure it is compatible with the vehicle's seat and seat belt system.

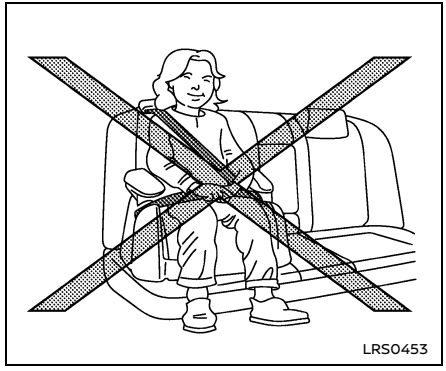
LRS0453

- Make sure the child's head will be properly supported by the booster seat or vehicle seat. The seatback must be at or above the center of the child's ears. For example, if a low back booster seat ① is chosen, the vehicle seatback must be at or above the center of the child's ears. If the seatback is lower than the center of the child's ears, a high back booster seat ② should be used.
- If the booster seat is compatible with your vehicle, place your child in the booster seat and check the various adjustments to be sure the booster seat is compatible with your child. Always follow all recommended procedures.

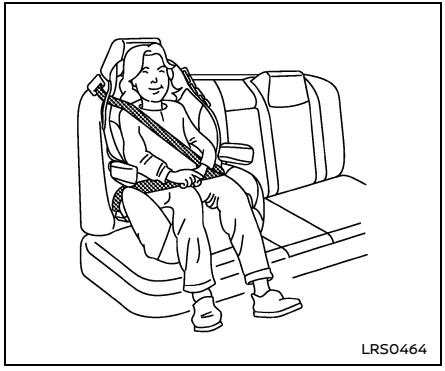

All U.S. states and Canadian provinces or territories require that infants and small children be restrained in an approved child restraint at all times while the vehicle is being operated.

The instructions in this section apply to booster seat installation in the rear seats or the front passenger seat.

Booster seat installation

⚠ WARNING

To avoid injury to child, do not use the lap/shoulder belt Automatic Locking Retractor (ALR) mode when using a booster seat with the seat belts.

Refer to all Warnings and Cautions in the "Child safety", "Child restraints" and "Booster seats" sections earlier in this section before installing a child restraint.

Follow these steps to install a booster seat in the rear seat or in the front passenger seat:

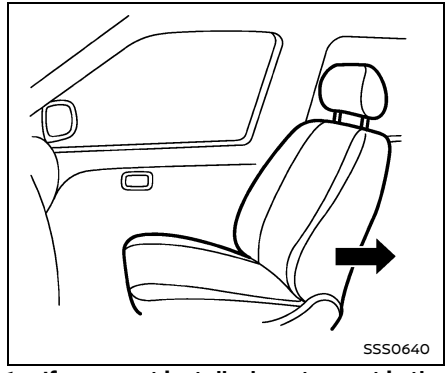

1. **If you must install a booster seat in the front seat, move the seat to the rearmost position.**
2. Position the booster seat on the seat. Only place it in a forward-facing direction. Always follow the booster seat manufacturer's instructions.

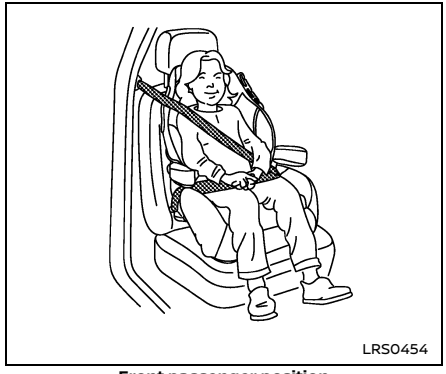

Front passenger position

3. The booster seat should be positioned on the vehicle seat so that it is stable.
   If necessary, adjust or remove the head restraint or headrest to obtain the correct booster seat fit. If the head restraint or headrest is removed, store it in a secure place. **Be sure to reinstall the head restraint or headrest when the booster seat is removed.** See "Head restraints/headrests" (P.30) for head restraint or headrest adjustment, removal and installation information.
   If the seating position does not have an adjustable head restraint or a headrest and it is interfering with the proper booster seat fit, try another seating position or a different booster seat.
4. Position the lap portion of the seat belt low and snug on the child's hips. Be sure to follow the booster seat manufacturer's instructions for adjusting the seat belt routing.
5. Pull the shoulder belt portion of the seat belt toward the retractor to take up extra slack. Be sure the shoulder belt is positioned across the top, middle portion of the child's shoulder. Be sure to follow the booster seat manufacturer's instructions for adjusting the seat belt routing.
6. Follow the warnings, cautions and instructions for properly fastening a seat belt shown in "Seat belts" (P.35).



7. If the booster seat is installed in the front passenger seat, push the ignition switch to the ON position. The front passenger air bag status light may or may not illuminate depending on the size of the child and the type of booster seat used. See "Front passenger air bag and status light" (P.76).

SUPPLEMENTAL RESTRAINT SYSTEM

PRECAUTIONS ON SUPPLEMENTAL RESTRAINT SYSTEM

This Supplemental Restraint System (SRS) section contains important information concerning the following systems.

- Driver and passenger supplemental front-impact air bag (NISSAN Advanced Air Bag System)
- Driver and front passenger supplemental knee air bag
- Front seat-mounted side-impact supplemental air bag
- Front central seat-mounted side-impact supplemental air bag (if so equipped)
- Roof-mounted curtain side-impact and rollover supplemental air bag
- Seat belt with pretensioner

Supplemental front-impact air bag system: The NISSAN Advanced Air Bag System can help cushion the impact force to the head and chest of the driver and front passenger in certain frontal collisions.

Driver and front passenger supplemental knee air bag system: This system can help cushion the impact force to the driver's and front passenger's knees in certain collisions.

Front seat-mounted side-impact supplemental air bag system: This system can help cushion the impact force to the chest and pelvis area of the driver and front passenger in certain side impact collisions. The supplemental side air bag is designed to inflate on the side where the vehicle is impacted.

Front central seat-mounted side-impact supplemental air bag (if so equipped): This system can help cushion the impact force to the head area of the driver and front passenger in certain side impact collisions or rollovers. The front central side-impact air bag is designed to inflate in the front central area where the vehicle is impacted.

Roof-mounted curtain side-impact and rollover supplemental air bag system: This system can help cushion the impact force to the head of occupants in front and rear (2nd and 3rd) outboard seating positions in certain side impact collisions or rollovers. In a side impact, the curtain air bags are designed to inflate on the side where the vehicle is impacted. In a rollover, the curtain air bags on both sides are designed to inflate. Under both side impact and rollover situations, the curtain air bags will remain inflated for a short period of time.

These supplemental restraint systems are designed to **supplement** the crash protection provided by the driver and passenger seat belts and are **not a substitute** for them. Seat belts should always be correctly worn and the occupant seated a suitable distance away from the steering wheel, instrument panel and door finishers. (See "Seat belts" (P.35) for instructions and precautions on seat belt usage.)

The supplemental air bags operate only when the ignition switch is in the ON position.

After pushing the ignition switch to the ON position, the supplemental air bag warning light illuminates. The supplemental air bag warning light will turn off after about 7 seconds if the systems are operational.

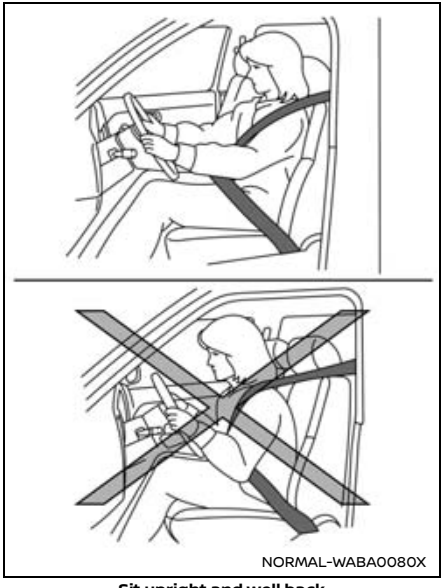

Sit upright and well back

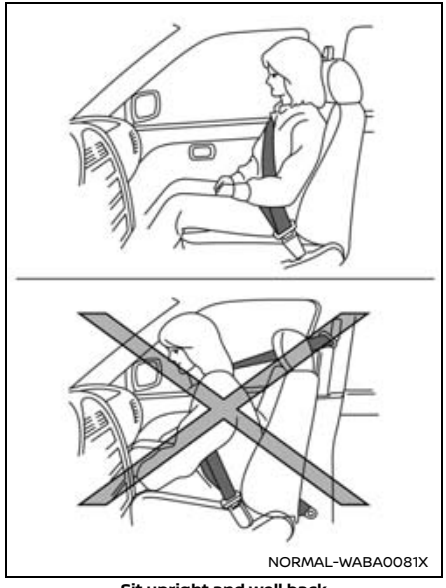

Sit upright and well back

⚠ WARNING

- **The supplemental front air bags ordinarily will not inflate in the event of a side impact, rear impact, rollover, or lower severity frontal collision. Always wear your seat belts to help reduce the risk or severity of injury in various kinds of accidents.**
- **The front passenger air bag and front passenger knee air bag will not inflate if the front passenger air bag status light is lit or if the front passenger seat is unoccupied. See "Front passenger air bag and status light" (P.76).**
- **The seat belts and the front air bags are most effective when you are sitting well back and upright in the seat. The front air bags inflate with great force. Even with the NISSAN Advanced Air Bag System, if you are unrestrained, leaning forward, sitting sideways or out of position in any way, you are at greater risk of injury or death in a crash. You may also receive serious or fatal injuries from the front air bag if you are up against it when it inflates. Always sit back against the seatback and as far-away as practical from the steering wheel or instrument panel. Always use the seat belts.**

- **The driver and front passenger seat belt buckles are equipped with sensors that detect if the seat belts are fastened. The NISSAN Advanced Air Bag System monitors the severity of a collision and seat belt usage then inflates the air bags as needed. Failure to properly wear seat belts can increase the risk or severity of injury in an accident.**
- **The front passenger seat is equipped with occupant classification sensors (weight sensors) that turn the front passenger air bag and front passenger knee air bag OFF under some conditions. This sensor is only used in this seat. Failure to be properly seated and wearing the seat belt can increase the risk or severity of injury in an accident. See "Front passenger air bag and status light" (P.76).**
- **Do not position your arm across the center of the steering wheel while driving, keep hands on the outside of the steering wheel. Placing them inside the steering wheel rim could increase the risk of injury if the front air bag inflates.**

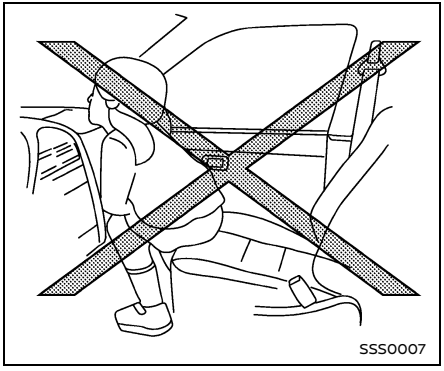
SSS0007

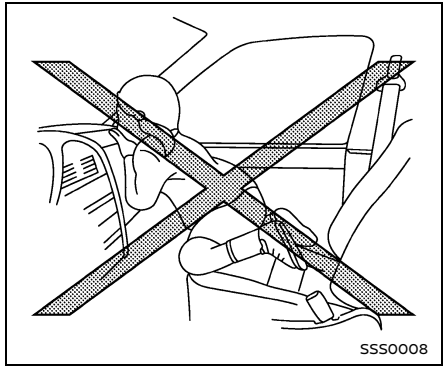
SSS0008

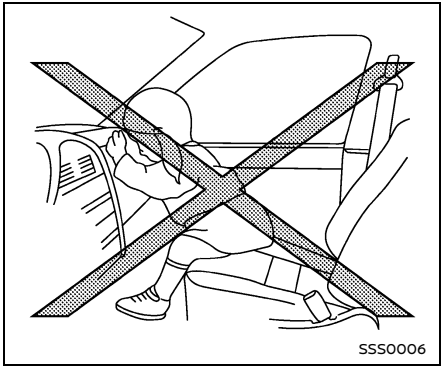
SSS0006

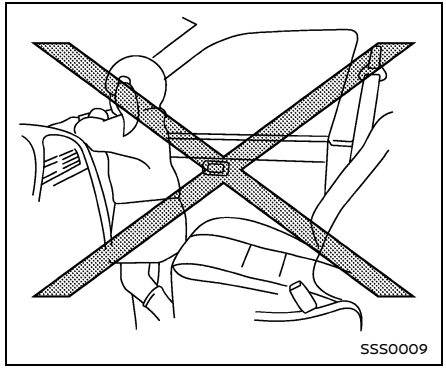
SSS0009

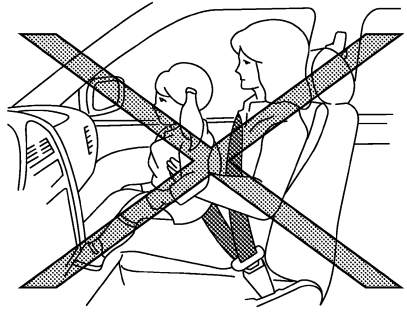

SSS0099

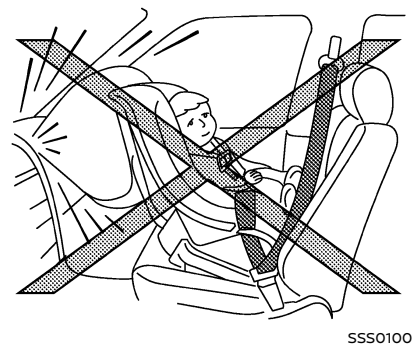

SSS0100

⚠ WARNING

- **To prevent serious injury or death never let children ride unrestrained or extend their hands or face out of the window. Do not attempt to hold them in your lap or arms. Some examples of dangerous riding positions are shown in the illustrations.**
- **Children may be severely injured or killed when the front air bags, side air bags or curtain air bags inflate if they are not properly restrained. Pre-teens and children should be properly restrained in the rear seat, if possible.**
- **Even with the NISSAN Advanced Air Bag System, never install a rear-facing child restraint in the front seat. An inflating front air bag could seriously injure or kill your child. For additional information, see "Child restraints" (P.48).**

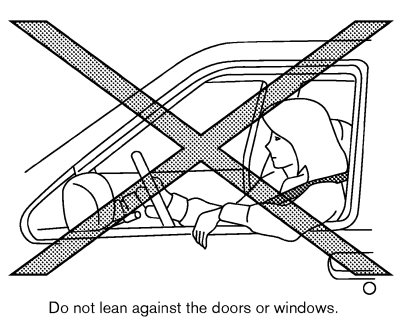

Do not lean against the doors or windows.

SSS0832

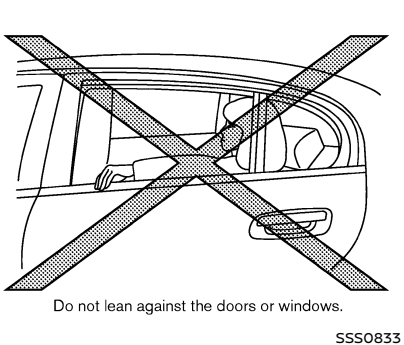

Do not lean against the doors or windows.

SSS0833

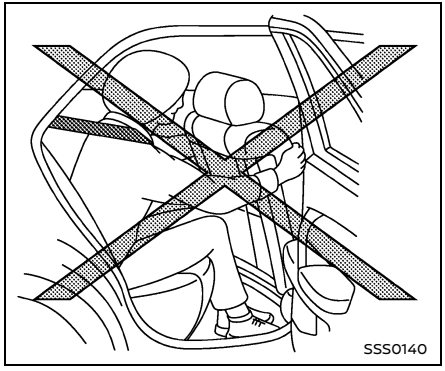
SSS0140

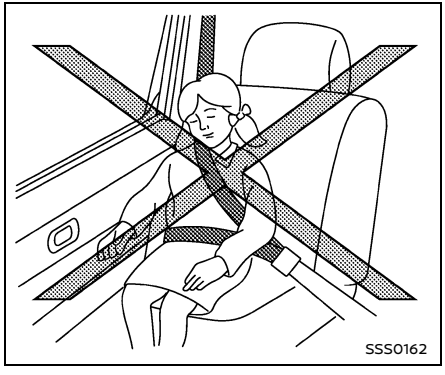
SSS0162

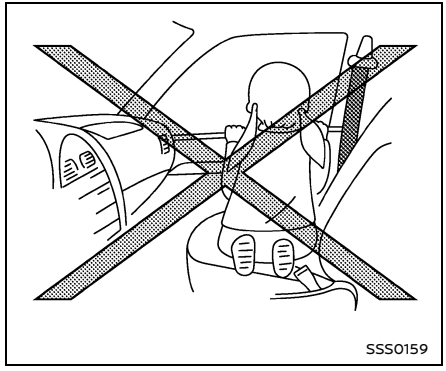
SSS0159

WARNING

Front and front central (if so equipped) seat-mounted side-impact supplemental air bags and roof-mounted curtain side-impact and rollover supplemental air bags:

- **The side air bags ordinarily will not inflate in the event of a front impact, rear impact, rollover, or lower severity side collision. Always wear your seat belts to help reduce the risk or severity of injury in various kinds of accidents.**
- **The front central side air bag and curtain air bags ordinarily will not inflate in the event of a front impact, rear impact, or lower severity side collision. Always wear your seat belts to help reduce the risk or severity of injury in various kinds of accidents.**
- **The seat belts, the side air bags and curtain air bags are most effective when you are sitting well back and upright in the seat with both feet on the floor. The side air bags and curtain air bags inflate with great force. To minimize the risk of severe injury or death in the event of a crash, do not allow anyone to place their hand, leg or face near the side air bags on the side of the seatback of the front seat or near the side roof rails. Do not allow anyone sitting in the front seats or rear outboard seats to extend their hand out of the window or lean against the door. Some examples of dangerous riding positions are shown in the previous illustrations.**

- **When sitting in the rear seat, do not hold onto the seatback of the front seat. If the side air bag inflates, you may be seriously injured. Be especially careful with children, who should always be properly restrained. Some examples of dangerous riding positions are shown in the illustrations.**
- **Do not use seat covers on the front seatbacks. They may interfere with side air bag inflation causing serious injury or death.**

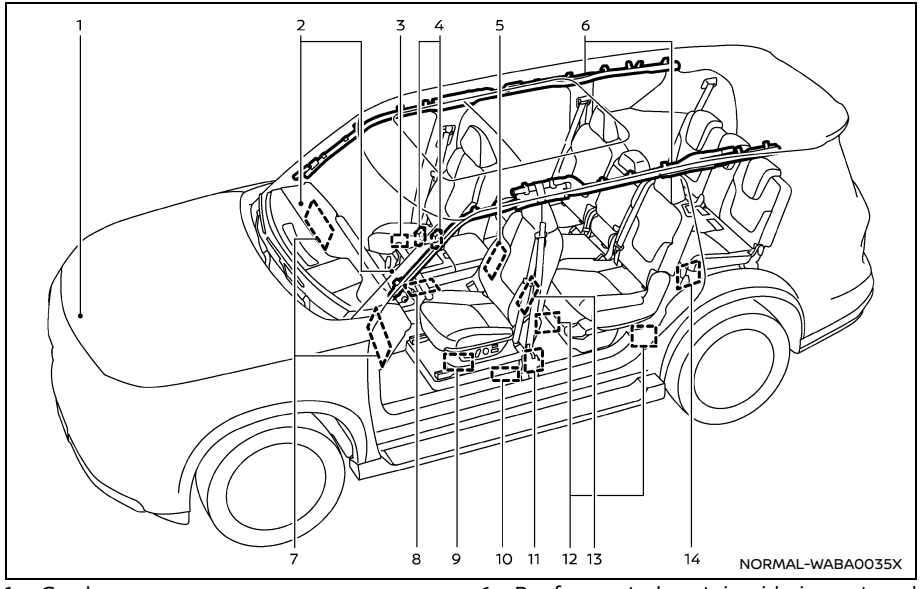

1. Crash zone sensor
2. Supplemental front-impact air bag modules (NISSAN Advanced Air Bags)
3. Occupant classification system control unit
4. Occupant classification sensors (weight sensors)
5. Front central seat-mounted side-impact supplemental air bag (if so equipped)
6. Roof-mounted curtain side-impact and rollover supplemental air bags
7. Driver and front passenger supplemental knee air bags
8. Air bag Control Unit (ACU)
9. Door satellite sensors (driver's side shown; front passenger side similar)

10. Lap outer pretensioners (front seats) (driver's side shown; front passenger side similar)
11. Seat belt pretensioners (front seats) (driver's side shown; front passenger side similar)
12. Satellite sensors (driver's side shown; front passenger side similar)
13. Front seat-mounted side-impact supplemental air bag modules (driver's side shown; front passenger side similar)
14. Seat belt pretensioners (second row outboard seats) (driver's side shown; front passenger side similar)

NISSAN ADVANCED AIR BAG SYSTEM (front seats)

Basic information

⚠ WARNING

To ensure proper operation of the passenger's advanced air bag system and minimize the risk of severe injury or death, please observe the following items.

- **Do not place objects on or near the steering wheel or instrument panel where the air bags inflate.**
- **Do not allow a passenger in the rear seat to push or pull on the seatback pocket.**
- **Do not place heavy loads heavier than 9.1 lbs (4 kg) on the seatback, head restraint or in the seatback pocket.**
- **Make sure that there is nothing pressing against the rear of the seatback, such as a child restraint installed in the rear seat or an object stored on the floor.**
- **Make sure that there is no object placed under the front passenger seat.**
- **Make sure that there is no object placed between the seat cushion and the center console or between the seat cushion and the door.**
- **Be sure that the front passenger seat does not contact the rear seat, instrument panel, etc., or the head restraint does not contact the roof.**
- **Do not position the front passenger seat so it contacts the rear seat. If the front seat does contact the rear seat, the air bag system may determine a sensor malfunction has occurred and the front passenger air bag status light may illuminate and the supplemental air bag warning light may flash.**
- **If a forward facing child restraint is installed in the front passenger seat, do not position the front passenger seat so the child restraint contacts the instrument panel. If the child restraint does contact the instrument panel, the system may determine the seat is occupied and the passenger air bag and front passenger knee air bag may deploy in a collision. Also the front passenger air bag status light may not illuminate. For additional information, see "Child restraints" (P.48).**
- **Confirm the operating condition with the front passenger air bag status light.**
- **If you notice that the front passenger air bag status light is not operating as described in this section, get the occupant classification system checked. It is recommended that you visit a NISSAN dealer for this service.**
- **Until you have confirmed with a dealer that your passenger seat occupant classification system is working properly, position the occupants in the rear seating positions.**

This vehicle is equipped with the NISSAN Advanced Air Bag System for the driver and front passenger seats. This system is designed to meet certification requirements under U.S. regulations. It is also permitted in

Canada. **All of the information, cautions and warnings in this manual apply and must be followed.**

The driver supplemental front-impact air bag is located in the center of the steering wheel. The passenger supplemental front-impact air bag is mounted in the instrument panel above the glove box. The front air bags are designed to inflate in higher severity frontal collisions, although they may inflate if the forces in another type of collision are similar to those of a higher severity frontal impact. They may not inflate in certain frontal collisions. Vehicle damage (or lack of it) is not always an indication of proper front air bag operation.

The vehicle's front air bag sensor system is designed to detect rapid deceleration usually associated with moderate to higher severity frontal collisions within a limited range of angles. Air bags are not designed to deploy in low-severity collisions. The vehicle's deceleration rate is related to various factors, such as speed of the vehicles, the weight and stiffness of the vehicles/objects involved, contact locations, and the angle of impact.

The NISSAN Advanced Air Bag System monitors information from the crash zone sensor, the Air bag Control Unit (ACU), seat belt buckle sensors and the occupant classification sensors (weight sensors). Inflator operation is based on the severity of a collision and seat belt usage for the driver. For the front passenger, the occupant classification sensors are also monitored. Based on information from the sensors, only one front air bag may inflate in a crash, depending on the crash severity and whether the front occupants are belted or unbelted. Additionally, the front passenger air bag and front passenger knee air bag may be automatically turned OFF under some conditions, depending on the information provided by the occupant classification sensors. If the front passenger air bag and front passenger knee air bag are OFF, the front passenger air bag status light will be illuminated. For additional information, see "Front passenger air bag and status light" (P.76). One front air bag inflating does not indicate improper performance of the system.

If you have any questions about your air bag system, it is recommended you visit a NISSAN dealer. If you are considering modification of your vehicle due to a disability, you may also contact NISSAN. Contact information is contained in the front of this Owner's Manual.

When a front air bag inflates, a fairly loud noise may be heard, followed by release of smoke. This smoke is not harmful and does not indicate a fire. Care should be taken not to inhale it, as it may cause irritation and choking. Those with a history of a breathing condition should get fresh air promptly.

Front air bags, along with the use of seat belts, help to cushion the impact force on the head and chest of the front occupants. They can help save lives and reduce serious injuries. However, an inflating front air bag may cause facial abrasions or other injuries. Front air bags, other than the driver's and front passenger's knee air bags, do not provide restraint to the lower body.

Even with NISSAN Advanced Air Bags, seat belts should be correctly worn and the driver and passenger seated upright as far as practical away from the steering wheel or instrument panel. The front air bags inflate quickly in order to help protect the front occupants. Because of this, the force of the front air bag inflating can increase the risk of injury if the occupant is too close to, or is against, the front air bag module during inflation.

The front air bags deflate quickly after a collision.

The front air bags operate only when the ignition switch is in the ON position.

After placing the ignition switch in the ON position, the supplemental air bag warning light illuminates. The supplemental air bag warning light will turn off after about 7 seconds if the system is operational.



Front passenger air bag status light

Front passenger air bag and status light

WARNING

The front passenger air bag and front passenger knee air bag are designed to automatically turn OFF under some conditions. Read this section carefully to learn how it operates. Proper use of the seat, seat belt and child restraints is necessary for most effective protection. Failure to follow all instructions in this manual concerning the use of seats, seat belts and child restraints can increase the risk or severity of injury in an accident.

Status light:

The front passenger seat is equipped with the occupant classification sensors (weight sensors) that turn the front passenger air bag and front passenger knee air bag are on or off depending on the weight applied to the front passenger seat. The status of the front passenger air bag and front passenger knee air bag (ON or OFF) is indicated by the front passenger air bag status light - which is located on the roof console. After the ignition switch is placed in the ON position, the front passenger air bag status light illuminates for about 7 seconds and then turns off or illuminates depending on the front passenger seat occupied status.

The light operates as follows:

- Unoccupied passenger seat: The light is ON and the front passenger air bag is OFF and will not inflate in a crash.
- Passenger seat occupied by a small adult, child or child restraint as outlined in this section: The light illuminates to indicate that the front passenger air bag is OFF and will not inflate in a crash.
- Occupied passenger seat and the passenger meets the conditions outlined in this section: The light is OFF to indicate that the front passenger air bag and front passenger knee air bag are operational.

In addition to the above, certain objects placed on the front passenger seat may also cause the light to operate as described above depending on their weight.

For additional information related to the normal operation and troubleshooting of this occupant classification sensor system, please refer to "Normal operation:" and "Troubleshooting:".

Front passenger air bag:

The front passenger air bag is designed to automatically turn OFF when the vehicle is operated under some conditions as described below as permitted by U.S. regulations. If the front passenger air bag is OFF, it will not inflate in a crash. The driver air bag and other air bags in your vehicle are not part of this system.

The purpose of the regulation is to help

reduce the risk of injury or death from an inflating air bag to certain front passenger seat occupants, such as children, by requiring the air bag to be automatically turned OFF. Certain sensors are used to meet the requirements.

The occupant classification sensor in this vehicle is a weight sensor. It is designed to detect an occupant and objects on the seat by weight. For example, if a child is in the front passenger seat, the Advanced Air Bag System is designed to turn the passenger air bag OFF in accordance with the regulations. Also, if a child restraint of the type specified in the regulations is on the seat, the occupant classification sensors can detect it and cause the air bag to turn OFF.

Front passenger seat adult occupants who are properly seated and using the seat belt as outlined in this manual should not cause the passenger air bag and front passenger knee air bag to be automatically turned OFF. For small adults it may be turned OFF, however, if the occupant takes his/her weight off the seat cushion (for example, by not sitting upright, by sitting on an edge of the seat, or by otherwise being out of position), this could cause the sensor to turn the air bag OFF. Always be sure to be seated and wearing the seat belt properly for the most effective protection by the seat belt and supplemental air bag.

NISSAN recommends that pre-teens and children be properly restrained in a rear seat. NISSAN also recommends that appropriate child restraints and booster seats be properly installed in a rear seat. If this is not possible, the occupant classification sensors are designed to operate as described above to turn the front passenger air bag and front passenger knee air bag OFF for specified child restraints. Failing to properly secure child restrains and to use the ALR mode may allow the restraint to tip or move in an accident or sudden stop. This can also result in the passenger air bag and front passenger knee air bag inflating in a crash instead of being OFF. (See "Child restraints" (P.48) for proper use and installation.)

If the front passenger seat is not occupied, the passenger air bag and front passenger knee air bag are designed not to inflate in a crash. However, heavy objects placed on the seat could result in air bag inflation, because of the object being detected by the occupant classification sensors. Other conditions could also result in air bag inflation, such as if a child is standing on the seat, or if two children are on the seat, contrary to the instructions in this manual. Always be sure that you and all vehicle occupants are seated and restrained properly.

Using the front passenger air bag status light, you can monitor when the front passenger air bag and front passenger knee air bag are automatically turned OFF.

If an adult occupant is in the seat but the front passenger air bag status light is illuminated (indicating that the front passenger air bag and front passenger knee air bag are OFF), it could be that the person is a small adult, or is not sitting on the seat properly.

If a child restraint must be used in the front seat, the front passenger air bag status light may or may not be illuminated, depending on the size of the child and the type of child restraint being used.

⚠ WARNING

If the front passenger air bag status light is not illuminated (indicating that the air bag might inflate in a crash), it could be that the front-facing child restraint or seat belt is not being used properly. To avoid serious injury or death, make sure that the child restraint is installed properly, the seat belt is used properly and the occupant is positioned properly. If the front passenger air bag status light is not illuminated, reposition the occupant or child restraint in a rear seat. Never use a rear-facing child restraint in the front seat.

If the front passenger air bag status light will not illuminate even though you believe that the front-facing child restraint, the seat belts and the occupant are properly positioned, it is recommended that you take your vehicle to a NISSAN dealer. A NISSAN dealer can check the system status by using a special tool. However, until you have confirmed with your dealer that your air bag is working properly, reposition the occupant or child restraint in a rear seat.

The NISSAN Advanced Air Bag System and

front passenger air bag status light will take a few seconds to register a change in the passenger seat status. This is normal system operation and does not indicate a malfunction.

If a malfunction occurs in the front passenger air bag system, the supplemental air bag warning light , located in the meter and gauges area will illuminated (blinking or steadily lit). Have the system checked. It is recommended you visit a NISSAN dealer for this service.

Normal operation:

In order for the occupant classification sensor system to classify the front passenger based on weight, please follow the precautions and steps outlined below:

Precautions:

- Make sure that there are no objects weighing over 9.1 lbs (4 kg) hanging on the seat or placed in the seatback pocket.
- Make sure that a child restraint or other object is not pressing against the rear of the seatback.
- Make sure that a rear passenger is not pushing or pulling on the back of the front passenger seat.
- Make sure that the front passenger seat or seatback is not forced back against an object on the seat or floor behind it.
- Make sure that there is no object placed under the front passenger seat.
- Make sure that the front passenger seat head restraint does not contact the roof when adjusting the front passenger seat.

Steps:

1. Adjust the seat as outlined. (See "Front seats" (P.18).) Sit upright, leaning against the seatback, and centered on the seat cushion with your feet comfortably extended to the floor.
2. Make sure there are no objects on your lap.
3. Fasten the seat belt as outlined. (See "Seat belts" (P.35).)
4. Remain in this position for 30 seconds allowing the system to classify the front passenger before the vehicle is put into motion.
5. Ensure proper classification by checking the front passenger air bag status light.

NOTE:
This vehicle's occupant classification sensor system locks the classification during driving so it is important that you confirm that the front passenger is properly classified prior to driving. Also, the occupant classification sensor system may recalculate the weight of the occupant when the vehicle comes to a stop (i.e. stop light, stop sign, etc.), so the front passenger seat occupant should continue to remain seated as outlined above.

Troubleshooting:

If you think the front passenger air bag status light is incorrect:

1. If the light is ON with an adult occupying the front passenger seat:
   - Occupant is a small adult — the front passenger air bag status light is functioning as intended. The front passenger air bag and front passenger knee air bag are suppressed.

   However, if the occupant is not a small adult, then this may be due to the following conditions that may be interfering with the weight sensors:
   - Occupant is not sitting upright, leaning against the seatback, and centered on the seat cushion with his/her feet comfortably extended to the floor.
   - A child restraint or other object pressing against the rear of the seatback.
   - A rear passenger pushing or pulling on the back of the front passenger seat.
   - Forcing the front seat or seatback against an object on the seat or floor behind it.
   - An object placed under the front passenger seat.
   - An object placed between the seat cushion and center console or between the seat cushion and the door.

   If the vehicle is moving, please come to a stop when it is safe to do so. Check and correct any of the above conditions. Restart the vehicle and wait 1 minute.

NOTE:

A system check will be performed during which the front passenger air bag status light will remain lit for about 7 seconds initially.

If the light is still ON after this, the person should be advised not to ride in the front passenger seat and the vehicle should be checked as soon as possible. It is recommended you visit a NISSAN dealer for this service.

2. If the light is OFF with a small adult, child or child restraint occupying the front passenger seat.

   This may be due to the following conditions that may be interfering with the weight sensors:

   - Small adult or child is not sitting upright, leaning against the seatback, and centered on the seat cushion with his/her feet comfortably extended to the floor.
   - The child restraint is not properly installed, as outlined. (See "Child restraints" (P.48).)
   - An object weighing over 9.1 lbs (4 kg) hanging on the seat or placed in the seatback pocket.
   - A child restraint or other object pressing against the rear of the seatback.
   - A rear passenger pushing or pulling on the back of the front passenger seat.
   - Forcing the front seat or seatback against an object on the seat or floor behind it.
   - An object placed under the front passenger seat.
   - An object placed between the seat cushion and center console.
   - The front passenger seat head restraint contacting the roof.

   If the vehicle is moving, please come to a stop when it is safe to do so. Check and correct any of the above conditions. Restart the vehicle and wait 1 minute.

NOTE:

A system check will be performed during which the front passenger air bag status light will remain lit for about 7 seconds initially.

If the light is still OFF after this, the small adult, child or child restraint should be repositioned in the rear seat and it is recommended that the vehicle should be checked by a NISSAN dealer as soon as possible.

3. If the light is OFF with no front passenger and no objects on the front passenger seat, the vehicle should be checked as soon as possible. It is recommended you visit a NISSAN dealer for this service.

Other supplemental front-impact air bag precautions

⚠ WARNING

To avoid risk of serious injury or death:

- **Do not place any objects on the steering wheel pad or on the instrument panel. Also, do not place any objects between any occupant and the steering wheel or instrument panel. Such objects may become dangerous projectiles and cause injury if the front air bags inflate.**
- **Do not place objects with sharp edges on the seat. Also, do not place heavy objects on the seat that will leave permanent impressions in the seat. Such objects can damage the seat or occupant classification sensors (weight sensors). This can affect the operation of the air bag system.**
- **Do not use water or acidic cleaners (hot steam cleaners) on the seat. This can damage the seat or occupant classification sensors. This can also affect the operation of the air bag system.**
- **Immediately after inflation, several front air bag system components will be hot. Do not touch them; you may severely burn yourself.**

- **No unauthorized changes should be made to any components or wiring of the supplemental air bag system. This is to prevent accidental inflation of the supplemental air bag or damage to the supplemental air bag system.**
- **After a collision, NISSAN recommends that you have the seat belts and the air bag system in your vehicle inspected, and any necessary components replaced by a NISSAN dealer as soon as possible.**
- **No unauthorized changes should be made to any components or the SRS wiring or your vehicle's electrical system, suspension system, or front end structure. The SRS wiring harnesses should not be modified or disconnected. Unauthorized electrical test equipment and probing devices should not be used on the air bag system. This could affect proper operation of the front air bag system.**
- **Tampering with the air bag system may result in serious personal injury. Tampering includes changes to the steering wheel and the instrument panel assembly by placing material over the steering wheel pad and above the instrument panel or by installing additional trim material around the air bag system.**
- **Removing or modifying the front passenger seat may affect the function of the air bag system and result in serious personal injury.**
- **Modifying or tampering with the front passenger seat may result in serious personal injury. For example, do not change the front seats by placing material on the seat cushion or by installing additional trim material, such as seat covers, on the seat that are not specifically designed to assure proper air bag operation. Additionally, do not stow any objects under the front passenger seat or the seat cushion and seatback. Such objects may interfere with the proper operation of the occupant classification sensors (weight sensors).**
- **No unauthorized changes should be made to any components or wiring of the seat belt system. This may affect the front air bag system. Tampering with the seat belt system may result in serious personal injury.**
- **It is recommended you visit a NISSAN dealer for work on and around the front air bags. It is also recommended you visit a NISSAN dealer for installation of electrical equipment. The Supplemental Restraint System (SRS) wiring harnesses* should not be modified or disconnected. Unauthorized electrical test equipment and probing devices should not be used on the air bag system.**
- **A cracked windshield should be replaced immediately by a qualified repair facility. A cracked windshield could affect the function of the supplemental air bag system.**

* **The SRS wiring harness connectors are yellow and orange for easy identification.**

When selling your vehicle, we request that you inform the buyer about the front air bag system and guide the buyer to the appropriate sections in this Owner's Manual.

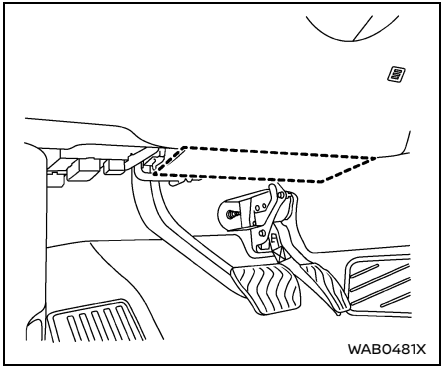

Driver's side

DRIVER AND FRONT PASSENGER SUPPLEMENTAL KNEE AIR BAG

The knee air bag is located in the knee bolster, on the driver's and front passenger's sides. **All of the information, cautions and warnings in this manual apply and must be followed.** The knee air bag is designed to inflate in higher severity frontal collisions, although it may inflate if the forces in another type of collision are similar to those of a higher severity frontal impact. It may not inflate in certain collisions.

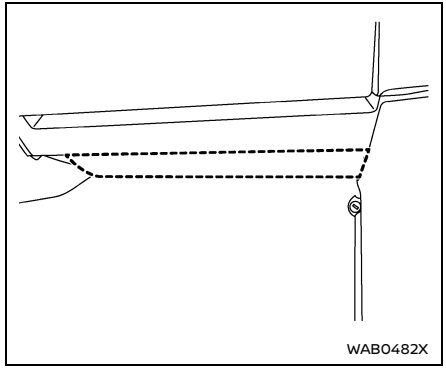

Front passenger's side

Vehicle damage (or lack of it) is not always an indication of proper knee air bag operation.

When the knee air bag inflates, a fairly loud noise may be heard, followed by release of smoke. This smoke is not harmful and does not indicate a fire. Care should be taken not to inhale it, as it may cause irritation and choking. Those with a history of a breathing condition should get fresh air promptly.

The knee air bag helps to cushion the impact force on the knees of the driver and front passenger. It can help reduce serious injuries. However, an inflating knee air bag may cause abrasions or other injuries. The knee air bag provides restraint to the lower body.

The knee air bag inflates quickly in order to help protect the occupants. Because of this, the force of the knee air bag inflating can increase the risk of injury if the occupant is too close to, or is against, this air bag module during inflation. The knee air bag will deflate quickly after the collision is over OR the knee air bag will remain inflated for a short time.

The knee air bag operates only when the ignition switch is placed in the ON position.

After placing the ignition switch in the ON position, the supplemental air bag warning light illuminates. The supplemental air bag warning light will turn off after about 7 seconds if the system is operational.

⚠ WARNING

To avoid risk of serious injury or death:

- **Do not place any objects between the knee bolster and the driver's or front passenger's seat. Such objects may become dangerous projectiles and cause injury if a knee air bag inflates.**
- **Right after inflation, the knee air bag system components will be hot. Do not touch them; you may severely burn yourself.**

- **No unauthorized changes should be made to any components or wiring of the knee air bag system. This is to prevent damage to or accidental inflation of the knee air bag system.**
- **Do not make unauthorized changes to your vehicle's electrical system or suspension system. This could affect proper operation of the knee air bag system.**
- **Tampering with the knee air bag system may result in serious personal injury. For example, do not change the driver or front passenger knee bolster or install additional trim material around the knee air bag.**
- **It is recommended that you visit a NISSAN dealer for work on and around the knee air bag. It is also recommended that you visit a NISSAN dealer for installation of electrical equipment. The SRS wiring harnesses* should not be modified or disconnected. Unauthorized electrical test equipment and probing devices should not be used on the knee air bag system.**

***The SRS wiring harness or connectors are yellow or orange for easy identification.**

When selling your vehicle, we request that you inform the buyer about the knee air bag system and guide the buyer to the appropriate sections in this manual.

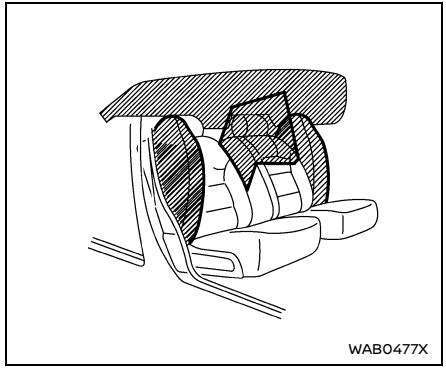
WAB0477X

FRONT, FRONT CENTRAL* SEAT-MOUNTED SIDE-IMPACT SUPPLEMENTAL AIR BAG AND ROOF-MOUNTED CURTAIN SIDE-IMPACT AND ROLLOVER SUPPLEMENTAL AIR BAG SYSTEMS

*: if so equipped

The side air bags are located in the outside of the seatback of the front seats. The front central side air bag (if so equipped) is located in the inside of the seatback of the driver's seat. The curtain air bags are located in the side roof rails. **All of the information, cautions and warnings in this manual apply and must be followed.** The side air bags and curtain air bags are designed to inflate in higher severity side collisions, although they may inflate if the forces in another type of collision are similar to those of a higher severity side impact. They are designed to inflate on the side where the vehicle is impacted. They may not inflate in certain side collisions on the side where the vehicle is impacted.

Curtain air bags are also designed to inflate in certain types of rollover collisions or near rollovers. As a result, certain vehicle movements (for example, during severe off roading) may cause the curtain air bags to inflate.

Vehicle damage (or lack of it) is not always an indication of proper side air bag and curtain air bag operation.

When side air bags and curtain air bags inflate, a fairly loud noise may be heard, followed by release of smoke. This smoke is not harmful and does not indicate a fire. Care should be taken not to inhale it, as it may cause irritation and choking. Those with a history of a breathing condition should get fresh air promptly.

Side air bags, along with the use of seat belts, help to cushion the impact force on the chest and pelvis of the front occupants. Front central side air bag, along with the use of seat belts, helps to cushion the impact force on the head area of the front occupants. Curtain air bags help to cushion the impact force to the head of occupants in the front and rear (2nd and 3rd) outboard seating positions. They can help save lives and reduce serious injuries. However, an inflating side air bag or curtain air bag may cause

abrasions or other injuries. Side air bags and curtain air bags do not provide restraint to the lower body.

The seat belts should be correctly worn and the driver and passenger seated upright as far as practical away from the side air bag. Rear seat passengers should be seated as far away as practical from the door finishers and side roof rails. The side air bags and curtain air bags inflate quickly in order to help protect the occupants. Because of this, the force of the side air bags and curtain air bags inflating can increase the risk of injury if the occupant is too close to, or is against, these air bag modules during inflation. The side air bags will deflate quickly after the collision is over. The front central side air bag and curtain air bags will remain inflated for a short period of time.

The side air bags and curtain air bags operate only when the ignition switch is in the ON position.

After pushing the ignition switch to the ON position, the supplemental air bag warning light illuminates. The air bag warning light will turn off after about 7 seconds if the systems are operational.

WARNING

To avoid risk of serious injury or death:

- **Do not place any objects near the seatback of the front seats. Also, do not place any objects (an umbrella, bag, etc.) between the front door finisher and the front seat. Such objects may become dangerous projectiles and cause injury if side air bag inflates.**
- **Right after inflation, several side air bags and curtain air bag system components will be hot. Do not touch them; you may severely burn yourself.**
- **No unauthorized changes should be made to any components or wiring of side air bag and curtain air bag systems. This is to prevent damage to or accidental inflation of the side air bag and curtain air bag systems.**
- **Do not make unauthorized changes to your vehicle's electrical system, suspension system or side panel. This could affect proper operation of the side air bag and curtain air bag systems.**
- **Tampering with the air bag system may result in serious personal injury. For example, do not change the front seats by placing material near the seatbacks or by installing additional trim material, such as seat covers, around the side air bags.**
- **Removing or modifying the front passenger seat may affect the function of the air bag system and result in serious personal injury.**
- **It is recommended you visit a NISSAN dealer for work on and around the side air bag and curtain air bag. It is also recommended you visit a NISSAN dealer for installation of electrical equipment. The Supplemental Restraint System (SRS) wiring harnesses* should not be modified or disconnected. Unauthorized electrical test equipment and probing devices should not be used on the side air bag or curtain air bag systems.**

* **The SRS wiring harness connectors are yellow and orange for easy identification.**

When selling your vehicle, we request that you inform the buyer about the side air bag and curtain air bag systems and guide the buyer to the appropriate sections in this Owner's Manual.

SEAT BELTS WITH PRETENSIONERS (front and second row outboard seats)

WARNING

To avoid risk of serious injury or death:

- **Deployed seat belt pretensioner(s) cannot protect you in another collision. Once a seat belt pretensioner has activated, it cannot be reused and must be replaced together with the retractor and buckle as a unit.**
- **If the vehicle becomes involved in a collision but pretensioner(s) are not activated, be sure to have the pretensioner system checked and, if necessary, replaced. It is recommended that you visit a NISSAN dealer for this service.**
- **No unauthorized changes should be made to any components or wiring of the pretensioner system. This is to prevent damage to or accidental activation of the pretensioner(s). Tampering with the pretensioner system may result in serious personal injury.**
- **It is recommended that you visit a NISSAN dealer for work on and around the pretensioner system. It is also recommended that you visit a NISSAN dealer for installation of electrical equipment. Unauthorized electrical test equipment and probing devices should not be used on the pretensioner system.**
- **If you need to dispose of the pretensioner(s) or scrap the vehicle, it is recommended that you visit a NISSAN dealer for this service. Incorrect disposal procedures could cause personal injury.**

The pretensioner system may activate with the supplemental air bag system in certain types of collisions.

Working with the seat belt retractor, it helps tighten the seat belt when the vehicle becomes involved in certain types of collisions, helping to restrain front and second row outboard seats occupants.

The pretensioner is encased with the seat belt retractor and buckle anchor. These seat belts are used the same way as conventional seat belts.

When a pretensioner activates, smoke is released and a loud noise may be heard. The smoke is not harmful, and it does not indicate a fire. Care should be taken not to inhale it as it may cause irritation and choking. Those with a history of a breathing condition should get fresh air promptly.

After pretensioner activation, load limiters allow the seat belt to release webbing (if necessary) to reduce forces against the chest.

The supplemental air bag warning light is used to indicate malfunctions in the pretensioner system. (See "Supplemental air bag warning light" (P.88) for more details.) If the operation of the supplemental air bag warning light indicates there is a malfunction, have the system checked. It is recommended you visit a NISSAN dealer for this service.

When selling your vehicle, we request that you inform the buyer about the pretensioner system and guide the buyer to the appropriate sections in this Owner's Manual.

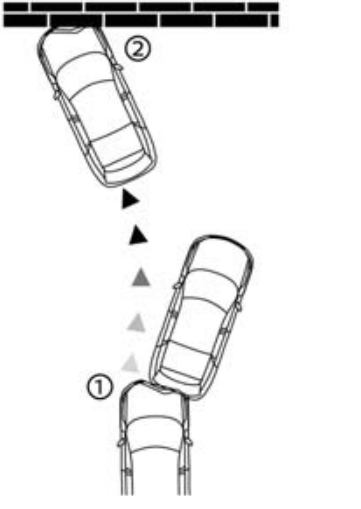

NORMAL-WABA0093X

AN AIR BAG ONLY WORKS ONCE

Basic information

In a multiple-impact collision, air bags help protect only during the first impact severe enough to activate the system.

If, as in the illustration above, for example, the collision labeled ① were severe enough to activate the front air bags, the front air bags would not be reactivated in collision ②.

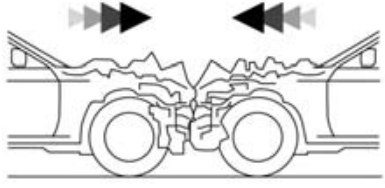
NORMAL-WABA0094X

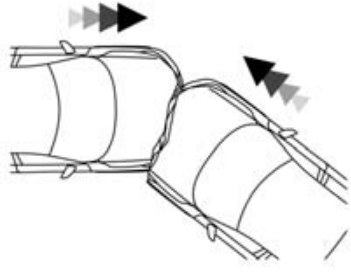
NORMAL-WABA0095X

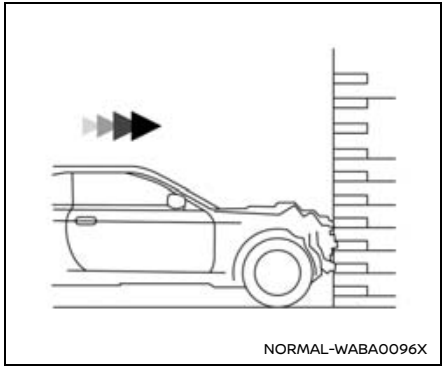
NORMAL-WABA0096X

Frontal collisions

A severe frontal head-on or angled collision involving another vehicle or object, probably will activate the front air bags. Depending on the specific impact, the side and curtain air bags may also activate in this type of collision.

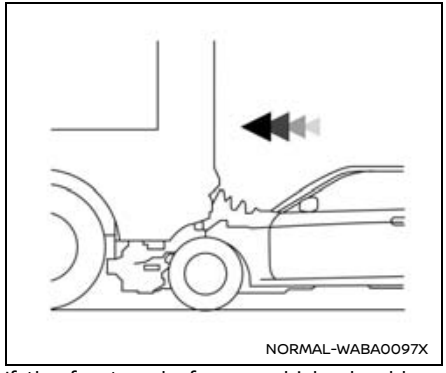
NORMAL-WABA0097X

If the front end of your vehicle should go under a vehicle, the impact may not activate the front air bags.

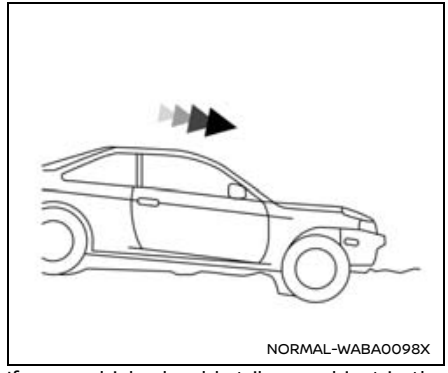
NORMAL-WABA0098X

If your vehicle should strike an object in the road, such as a rock, debris or hole, the front air bags may or may not activate, depending on the specific impact.

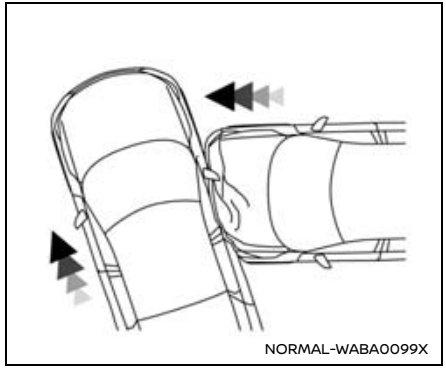
NORMAL-WABA0099X

Side, rear and rollover collisions

The side air bags and curtain air bags are designed to inflate in higher severity side collisions, although they may inflate if the forces in another type of collision are similar to those of a higher severity side impact. They are designed to inflate on the side where the vehicle is impacted.

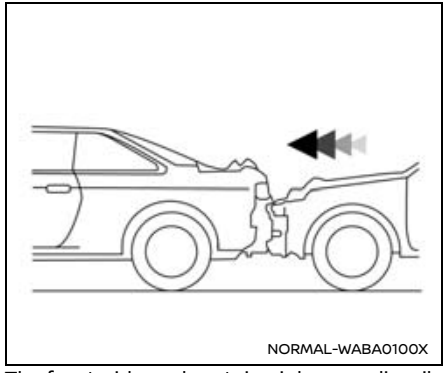
NORMAL-WABA0100X

The front, side and curtain air bags ordinarily will not inflate in the event your vehicle is struck from the rear.

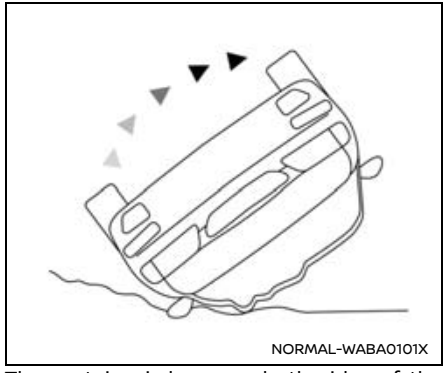
NORMAL-WABA0101X

The curtain air bags on both sides of the vehicle and the front central side air bag (if so equipped) are designed to activate in certain types of rollover collisions or near rollovers. This function is in addition to the side impact protection function described above. The front air bags are not likely to activate in this situation.

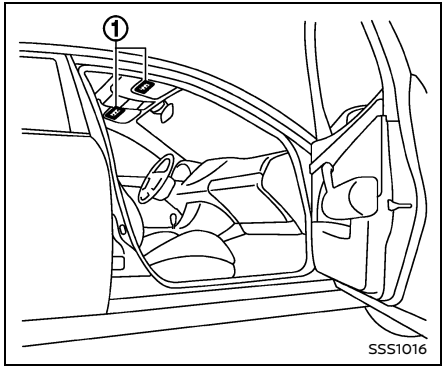

SUPPLEMENTAL AIR BAG WARNING LABELS

Warning labels about the supplemental front-impact air bag system are placed in the vehicle as shown in the illustration.

SRS air bag

The warning labels ① are located on the surface of the sun visors.

⚠ WARNING

Do not use a rear-facing child restraint on a seat protected by an air bag in front of it. If the air bag deploys, it may cause serious injury or death.

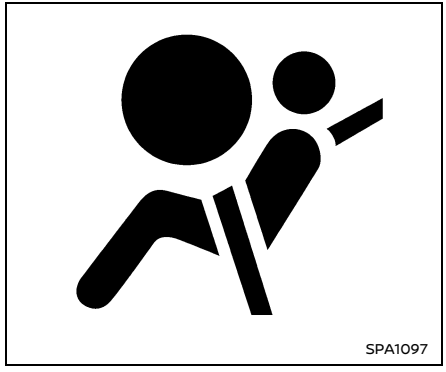

SUPPLEMENTAL AIR BAG WARNING LIGHT

The supplemental air bag warning light, displaying in the instrument panel, monitors the circuits for the air bag systems, pretensioners and all related wiring.

When the ignition switch is in the ON position, the supplemental air bag warning light illuminates for about 7 seconds and then turns off. This means the system is operational.

If any of the following conditions occur, the air bag and/or pretensioner systems need servicing:

- The supplemental air bag warning light remains on after approximately 7 seconds.
- The supplemental air bag warning light flashes intermittently.
- The supplemental air bag warning light does not come on at all.

Under these conditions, the air bag and/or pretensioner systems may not operate properly. They must be checked and repaired. It is recommended you visit a NISSAN dealer for this service.

⚠ WARNING

If the supplemental air bag warning light is on, it could mean that the front air bag, knee air bag, side air bag, curtain air bag and/or pretensioner systems will not operate in an accident.

To help avoid injury to yourself or others, have your vehicle checked as soon as possible. It is recommended you visit a NISSAN dealer for this service.

REPAIR AND REPLACEMENT PROCEDURE

The front air bags, knee air bags, side air bags, curtain air bags and pretensioners are designed to activate on a one-time-only basis. As a reminder, unless it is damaged, the supplemental air bag warning light will remain illuminated after inflation has occurred. These systems should be repaired and/or replaced as soon as possible. It is recommended you visit a NISSAN dealer for this service.

When maintenance work is required on the vehicle, the front air bags, knee air bags, side air bags, curtain air bags, pretensioners and related parts should be pointed out to the person conducting the maintenance. The ignition switch should always be in the OFF position when working under the hood or inside the vehicle.

WARNING

To ensure proper operation of the seat belts and the air bag system and minimize the risk of severe injury or death please observe the following items:

- **Once a front air bag, knee air bag, side air bag or curtain air bag has inflated, the air bag module will not function again and must be replaced. Additionally, the activated pretensioner(s) must also be replaced. The air bag module and pretensioner(s) should be replaced. It is recommended that you visit a NISSAN dealer for this service. However, the air bag module and pretensioner(s) cannot be repaired.**
- **The front air bag, knee air bag, side air bag, curtain air bag and the pretensioner should be inspected if there is any damage to the front end or side portion of the vehicle. It is recommended that you visit a NISSAN dealer for this service.**
- **If you need to dispose of a supplemental air bag or pretensioner systems or scrap the vehicle, it is recommended that you visit a NISSAN dealer. Incorrect disposal procedures could cause personal injury.**
- **If there is an impact to your vehicle from any direction, your Occupant Classification Sensor (OCS) should be checked to verify it is still functioning correctly. It is recommended that you visit a NISSAN dealer for this service. The OCS should be checked even if no air bags deploy as a result of the impact. Failure to verify proper OCS function may result in an improper air bag deployment resulting in injury or death.**

MEMO

2 Instruments and controls

Cockpit 94
Instrument panel 95
Meters and gauges 96
- Basic information 96
- Changing the meter screen view 97
- Speedometer and odometer 98
- Tachometer 99
- Engine coolant temperature gauge 99
- Fuel gauge 100
- Instrument brightness control 101
- Automatic Transmission (AT) position indicator 101
- ECO Drive Report 101

Warning lights, indicator lights and audible reminders 102
- Warning & Indicator Lights 102
- Checking lights 102
- Warning/indicator lights (red) 102
- Warning/indicator lights (yellow) 105
- Warning/indicator lights (other) 109
- Audible reminders 110

Vehicle information display 111
- Basic information 111
- How to use the vehicle information display 112
- Startup display 112
- Settings 113
- Vehicle information display warnings and indicators 121
- Trip computer 136
- Clock and outside air temperature 142

Touch screen display 143
- Basic information 143
- Vehicle 143

Head Up Display (HUD) (if so equipped) 146
- Basic information 146
- How to use the HUD 147
- Driver Assistance/Navigation/Traffic Sign/Audio/TEL/SMS/Message for Driver Assistance linking 148
- Warning message (if so equipped) 148

Security systems 149
- Basic information 149
- Vehicle Security System 149
- NISSAN Vehicle Immobilizer System 150

Wiper and washer switch 151
- Basic information 151
- Windshield wiper and washer operation 151
- Rain-sensing auto wiper system 152
- Rear window wiper and washer operation 153

Rear window defroster and outside mirror defroster (if so equipped) ... 154
Windshield deicer (if so equipped) ... 154
Headlight and turn signal switch ... 155
Headlight switch ... 155
Turn signal switch ... 160
Fog light switch (if so equipped) ... 160
Basic information ... 160
Front fog lights ... 160
Horn ... 161
Heated steering wheel (if so equipped) ... 161
Heated seats (if so equipped) ... 162
Basic information ... 162
Operation with touch screen display ... 162
Operation with switch ... 163
Ventilated seats (if so equipped) ... 163
Basic information ... 163
Operation with touch screen display ... 164
Operation with switch ... 164
Steering Assist switch ... 164
Vehicle Dynamic Control (VDC) OFF switch ... 165
Hill descent control switch (if so equipped) ... 165
Differential lock mode switch (if so equipped) ... 166
Trailer Brake Controller Unit (TBCU) (if so equipped) ... 167
Rear Door Alert ... 167
Power outlet ... 168
Basic information ... 168
USB (Universal Serial Bus) charging connector ... 171
Magnetic wireless charger (if so equipped) ... 171
Emergency Call (SOS) button (if so equipped) ... 173
Emergency support ... 173
Storage ... 175
Cup holders ... 175
Overhead console ... 177
Glove box ... 178
Console box ... 178
Lower console tray ... 179
Card holder ... 179
Coat hooks ... 179
Luggage hooks ... 180
Cargo floor box ... 180
Roof rack ... 181
Windows ... 182
Power windows ... 182
Moonroof (if so equipped) ... 184
Basic information ... 184
Power moonroof and sunshade ... 185
Interior lights ... 186
Basic information ... 186
Interior light switch ... 187
Map lights ... 187
Rear personal lights ... 187
Rear room light ... 188
Vanity mirror light ... 188
Cargo light ... 188

HomeLink® Universal Transceiver (if so equipped) 188
Basic information 188
Programming HomeLink® 189
Programming HomeLink® for Canadian customers and gate openers 190
Operating the HomeLink® Universal Transceiver 191
Programming troubleshooting 191
Clearing the programmed information 191
Reprogramming a single HomeLink® button 191
If your vehicle is stolen 191

COCKPIT

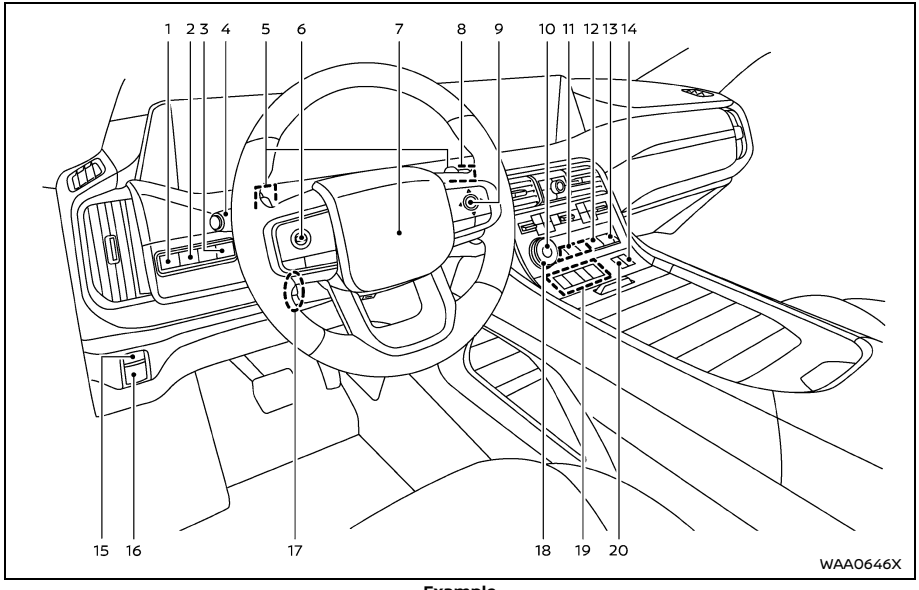

Example

1. Steering Assist switch
2. Head Up Display (HUD) switch*
3. Power liftgate switch*
4. Headlight and turn signal switch/Fog light switch*
5. Paddle shifters
6. Steering-wheel-mounted controls (left side)
   - ProPILOT Assist switch
   - Volume control**
7. Steering wheel
   - Horn
8. Wiper and washer switch
9. Steering-wheel-mounted controls (right side)
   - Vehicle information display control
   - Touch screen display control**
   - Audio control**
   - Bluetooth® Hands-Free Phone System switches**
   - Voice Recognition system switch**
10. Hill descent control switch*
11. 4WD shift switch*
12. Differential lock mode switch*
13. Vehicle Dynamic Control (VDC) OFF switch
14. Idling Stop OFF switch
15. Automatic brake hold switch
16. Parking brake switch
17. Tilt and telescopic steering wheel control*/Tilt and telescopic steering lock lever*
18. Drive mode selector*
19. Shift buttons
20. Air suspension AUTO switch*

*: if so equipped

**: Refer to the separate NissanConnect® Owner's Manual (if so equipped).

INSTRUMENT PANEL

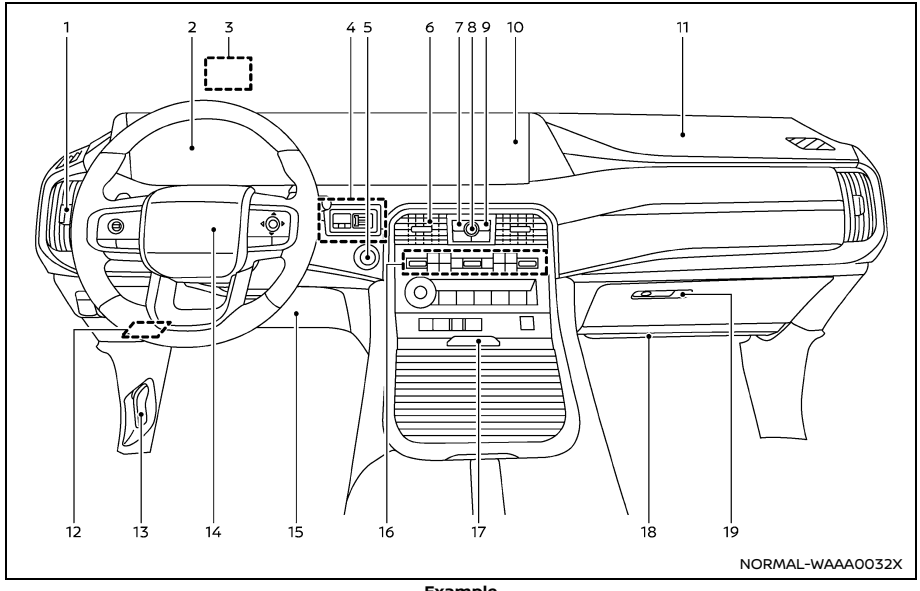

Example

1. Side ventilator
2. Meters and gauges/Clock
3. Head Up Display (HUD)*
4. Trailer Brake Controller Unit (TBCU)*
5. Push-button ignition switch
6. Center ventilator
7. CAMERA*/☀/☽ button
8. Audio switches**
9. Hazard indicator flasher switch
10. Touch screen display**
    - Intelligent Around View® Monitor*
    - RearView monitor*
    - NissanConnect® system**
    - Heater and air conditioner
    - Defroster
    - Heated steering wheel*
    - Heated seats*
    - Ventilated seats*
11. Front passenger supplemental air bag
12. Fuse box
13. Interior hood release handle
14. Driver supplemental front-impact air bag
15. Driver supplemental knee air bag
16. Heater and air conditioner
17. Console box
    - Cup holders
    - USB (Universal Serial Bus) connection ports**
    - Magnetic wireless charger*
18. Front passenger supplemental knee air bag
19. Glove box

*: if so equipped

**: Refer to the separate NissanConnect® Owner's Manual (if so equipped).

METERS AND GAUGES

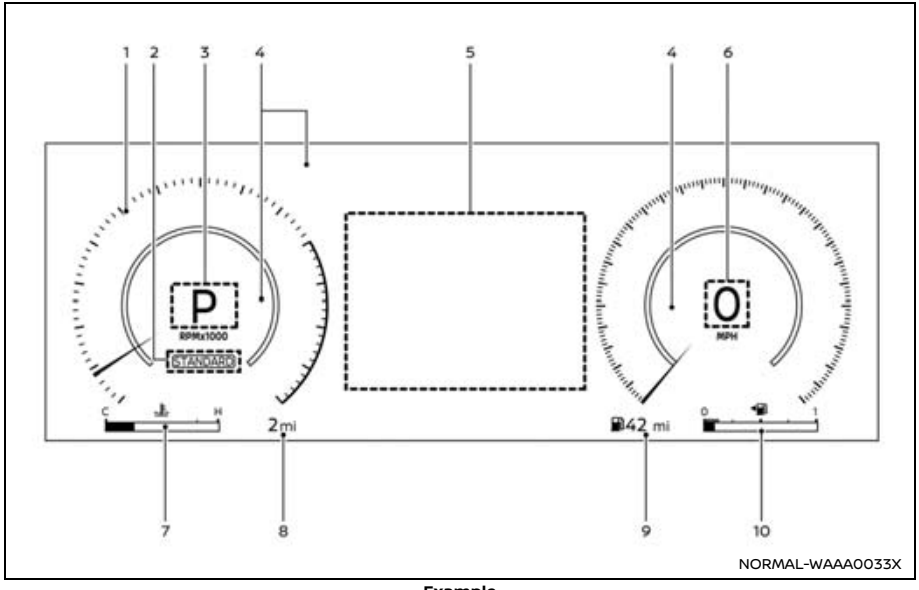

Example

1. Tachometer
2. Drive Mode Selector indicator*
3. Automatic Transmission (AT) position indicator
4. Warning and indicator lights
5. Vehicle information display
6. Speedometer
7. Engine coolant temperature gauge
8. Odometer
9. Distance to empty (dte)
10. Fuel gauge

*: if so equipped

BASIC INFORMATION

The view of the meter screen can be changed. (See "Changing the meter screen view" (P.97).)

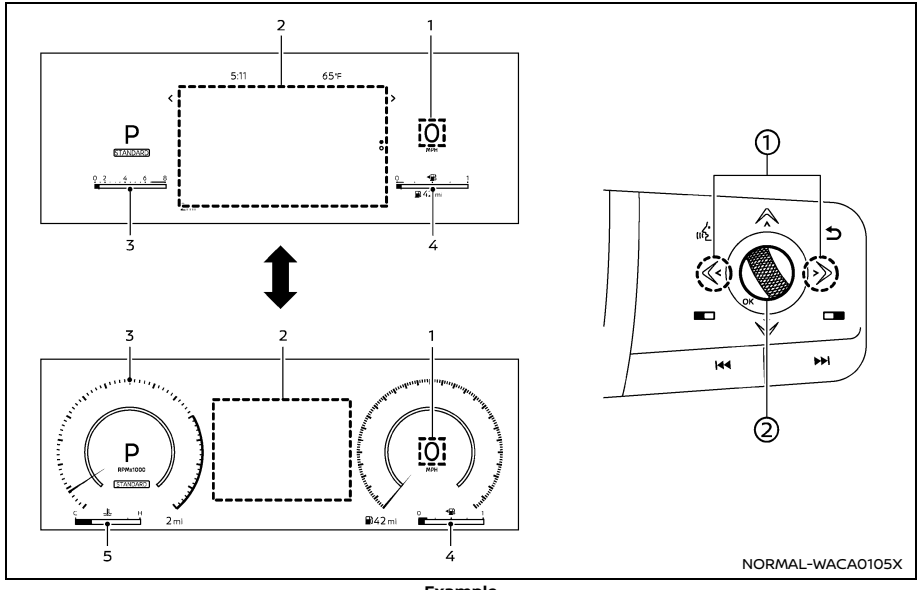

Example

1. Speedometer
2. Vehicle information display
3. Tachometer
4. Fuel gauge
5. Engine coolant temperature gauge

CHANGING THE METER SCREEN VIEW

The meter screen view can be changed according to your preferences.

To change the meter screen view:

1. Push left or right arrow key ① to select "Settings" menu on the vehicle information display and push the scroll dial.
2. Rotate the scroll dial ② to select "Customize Display" and push the scroll dial.
3. Rotate the scroll dial to select "Change Meter View" and push the scroll dial.

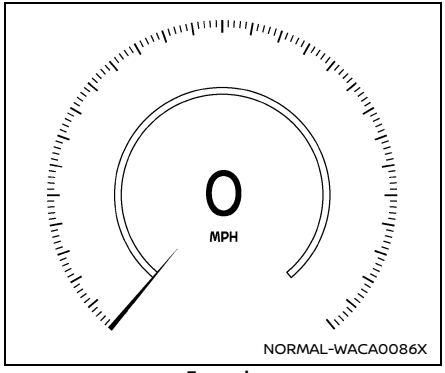

Example

SPEEDOMETER AND ODOMETER

Speedometer

The speedometer indicates vehicle speed in miles per hour (MPH) and kilometers per hour (km/h).

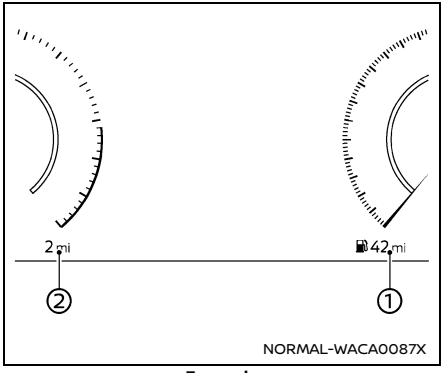

Example

Distance to empty (dte)/Odometer

Distance to empty (dte):

The distance to empty (dte) ① provides an estimation of the distance that can be driven before refueling. The dte is constantly being calculated, based on the amount of fuel in the fuel tank and the actual fuel consumption.

The display is updated every 30 seconds.

The dte mode includes a low range warning feature. If the fuel level is low, the warning is displayed on the screen.

When the fuel level drops even lower, the dte display will change to "———".

- If the amount of fuel added is small, the value displayed just before the ignition switch is placed in the OFF position may continue to be displayed.
- When driving uphill or rounding curves, the fuel in the tank shifts, which may momentarily change the display.

Odometer:

The odometer ② is displayed in the vehicle information display to indicate the total distance the vehicle has been driven.

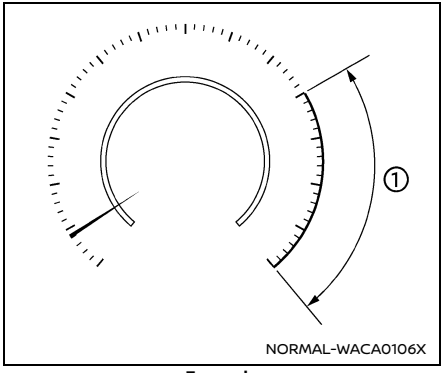

Example

TACHOMETER

The tachometer indicates engine speed in revolutions per minute (RPM). **Do not rev the engine into the red zone ①.**

⚠ CAUTION

When engine speed approaches the red zone, shift to a higher gear or reduce engine speed. Operating the engine in the red zone may cause serious engine damage.

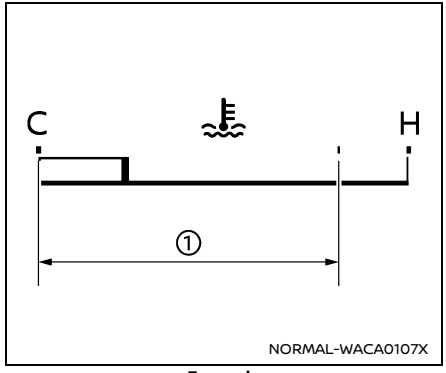

Example

ENGINE COOLANT TEMPERATURE GAUGE

The gauge indicates the engine coolant temperature.

The engine coolant temperature is within the normal range when the gauge needle points within the zone ① shown in the illustration.

The engine coolant temperature varies with the outside air temperature and driving conditions.

⚠ CAUTION

- **If the gauge indicates the engine coolant temperature is near the hot (H) end of the normal range, reduce vehicle speed to decrease the temperature.**
- **If the gauge is over the normal range, stop the vehicle as soon as safely possible and let the engine idle.**
- **If the engine is overheated, continued operation of the vehicle may seriously damage the engine. (See "If your vehicle overheats" (P.453) for immediate action required.)**

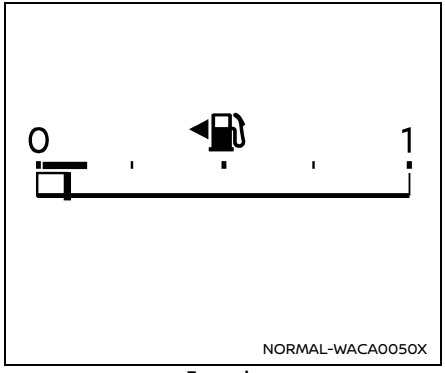

Example

FUEL GAUGE

The fuel gauge indicates the approximate fuel level in the tank when the ignition switch is in the ON position.

The gauge may move slightly during braking, turning, accelerating, or going up and down hills due to movement of fuel in the tank.

The low fuel warning appears on the vehicle information display when the fuel level in the tank is getting low. Refuel as soon as it is convenient, preferably before the gauge reads 0 (empty).

The arrow, , indicates the location of the fuel-filler door.

Refuel before the gauge reads the empty (0) position.

There is a small reserve of fuel in the tank when the fuel gauge reads the empty (0) position.

CAUTION

- **If the vehicle runs out of fuel, the malfunction indicator light (MIL) may come on. Refuel as soon as possible. After a few driving trips, the light should turn off. If the light remains on after a few driving trips, have the vehicle inspected. It is recommended you visit a NISSAN dealer for this service.**
- **For additional information, see "Malfunction Indicator Light (MIL)" (P.108).**

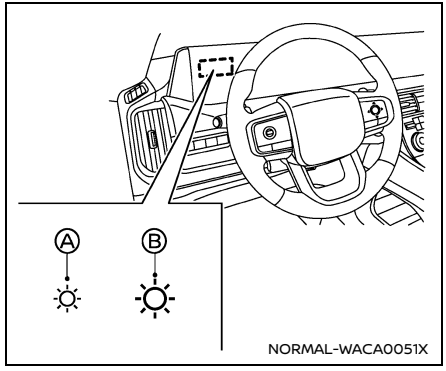

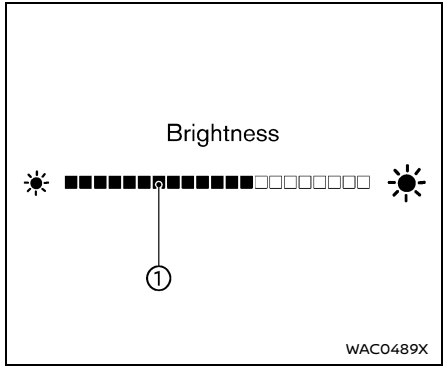

INSTRUMENT BRIGHTNESS CONTROL

The instrument brightness control switch can be operated when the ignition switch is in the ON position. When the switch is operated, the vehicle information display switches to the brightness adjustment mode.

Touch the switch Ⓐ to dim the instrument panel lights. The bar ① moves to the left side.

Touch the switch Ⓑ to brighten the lights. The bar ① moves to the right side.

The vehicle information display returns to the normal display when the instrument brightness control switch is not operated for more than 5 seconds.

AUTOMATIC TRANSMISSION (AT) POSITION INDICATOR

The Automatic Transmission (AT) position indicator indicates the shift position when the ignition switch is in the ON position. (See "Automatic Transmission (AT) position indicator" (P.124).)

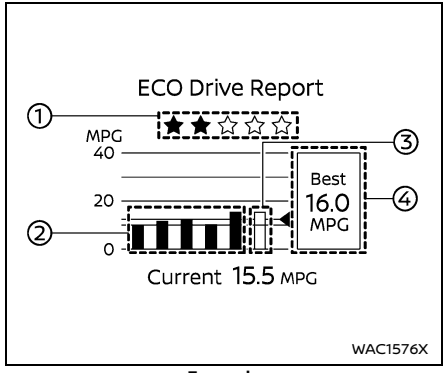

Example

ECO DRIVE REPORT

When the ignition switch is placed in the ON or OFF position, the ECO Drive Report is displayed.

① ECO evaluation
② Previous 5 times (History)
③ Current fuel economy
④ Best fuel economy

The result of ECO evaluation is displayed when the vehicle is driven for about 10 minutes or more.

①: The more economically you drive, the more ★ appear.

②: The average fuel economy for the previous 5 times will be displayed.

③: The average fuel economy since the last reset will be displayed.

④: The best fuel economy of the past history will be displayed.

When the "See Tire Pressure" message appears in the ECO Drive Report, the display can be switched to the Tire Pressures display by pushing the scroll dial on the steering wheel to show an additional message. (See "ECO Mode Setting" (P.115).)

WARNING LIGHTS, INDICATOR LIGHTS AND AUDIBLE REMINDERS

WARNING & INDICATOR LIGHTS

Warning/indicator lights (red)



Warning/indicator lights (yellow)





Warning/indicator lights (other)

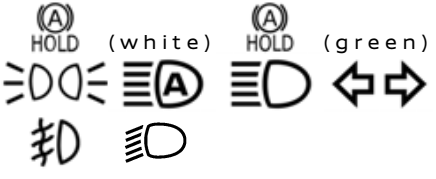

CHECKING LIGHTS

With all doors closed, apply the parking brake, fasten the seat belts and place the ignition switch in the ON position without starting the engine. The following lights (if so equipped) will come on:

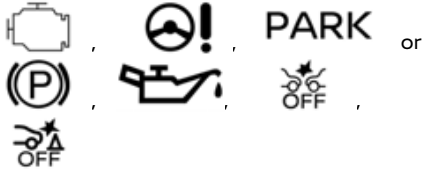

The following lights (if so equipped) come on briefly and then go off:

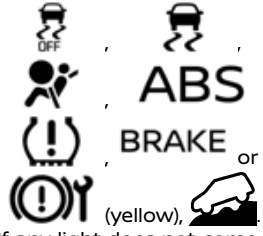

If any light does not come on or operates in a way other than described, it may indicate a burned-out bulb and/or a system malfunction. It is recommended you have the system checked by a NISSAN dealer.

WARNING/INDICATOR LIGHTS (red)

Basic information

See "Vehicle information display" (P.111).

Brake warning light

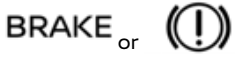

When the ignition switch is placed in the ON position, the brake warning light remains illuminated for about a few seconds. If the brake warning light illuminates at any other time, it may indicate that the hydraulic brake system is not functioning properly. If the brake warning light illuminates, stop the vehicle immediately and it is recommended that you contact a NISSAN dealer.

Low brake fluid warning light:

When the ignition switch is placed in the ON position, the brake warning light illuminates, and then turns off. If the light illuminates while the engine is running with the parking brake not applied, stop the vehicle and perform the following:

1. Check the brake fluid level. If brake fluid is necessary, add fluid and have the system checked. It is recommended you have this service performed by a NISSAN dealer. (See "Brake fluid" (P.474).)
2. If the brake fluid level is correct, have the warning system checked. It is recommended you have this service performed by a NISSAN dealer.

Anti-lock Braking System (ABS) warning indicator:

When the parking brake is released and the brake fluid level is sufficient, if both the brake

warning light and the Anti-lock Braking System (ABS) warning light illuminate, it may indicate the ABS is not functioning properly. Have the brake system checked, and if necessary repaired. It is recommended you visit a NISSAN dealer for this service. (See "Anti-lock Braking System (ABS) warning light" (P.105).)

⚠ WARNING

- **Your brake system may not be working properly if the warning light is on. Driving could be dangerous. If you judge it to be safe, drive carefully to the nearest service station for repairs. Otherwise, have your vehicle towed because driving it could be dangerous.**
- **Pressing the brake pedal with the engine stopped and/or low brake fluid level may increase your stopping distance and braking will require greater pedal effort as well as pedal travel.**
- **If the brake fluid level is below the minimum or MIN mark on the brake fluid reservoir, do not drive until the brake system has been checked. It is recommended you visit a NISSAN dealer for this service.**

Charge warning light



When the ignition switch is in the ON position, the charge warning light illuminates and then turns off.

If the light illuminates while the engine is running, it may indicate the charging system is not functioning properly. Turn the engine off and check the alternator belt. If the belt is loose, broken, missing or if the light remains on, have your vehicle serviced immediately. It is recommended you visit a NISSAN dealer for this service.

⚠ CAUTION

Do not continue driving if the alternator belt is loose, broken or missing.

Electric power steering warning light (red)



When the ignition switch is in the ON position, the electric power steering warning light illuminates. After starting the engine, the electric power steering warning light turns off. This indicates the electric power steering is operational.

When the electric power steering warning light illuminates in red, the electric power steering does not operate. Stop the vehicle in a safe place immediately. Have the system checked. It is recommended that you visit a NISSAN dealer for this service.

(See "Electric power steering" (P.418).)

Electric shift control system warning light



The electric shift control system warning light illuminates when a malfunction occurs in the electric shift control system. When the master warning light illuminates, the chime sounds and the following message is displayed in the vehicle information display: “When parked apply parking brake”.

When the ignition switch is placed in the OFF position, the chime sounds continuously. Ensure the parking brake is applied.

Have the system checked by a NISSAN dealer.

Electronic parking brake warning light

 or PARK

The electronic parking brake warning light indicates that the electronic parking brake system is operating.

When the ignition switch is placed in the ON or ACC position, the electronic parking brake warning light illuminates. When the engine is

started and the parking brake is released, the warning light turns off.

If the parking brake is not released, the electronic parking brake warning light remains on. Be sure that the electronic parking brake warning light has turned off before driving. (See "Parking brake" (P.307).)

If the electronic parking brake warning light illuminates or flashes while the electronic parking brake system warning light illuminates, it may indicate that the electronic parking brake system is not functioning properly. Have the system checked, and if necessary repaired. It is recommended you visit a NISSAN dealer for this service.

Engine oil pressure warning light



This light warns of low engine oil pressure. When the ignition switch is in the ON position, the engine oil pressure warning light illuminates. After starting the engine, the engine oil pressure warning light turns off. This indicates that the oil pressure sensors in the engine are operational.

If the engine oil pressure warning light illuminates or blinks while the engine is running, it may indicate that the engine oil pressure is low.

Stop the vehicle safely as soon as possible. Stop the engine immediately and call a NISSAN dealer.

⚠ CAUTION

- **Running the engine with the engine oil pressure warning light illuminated could cause serious damage to the engine.**
- **The engine oil pressure warning light is not designed to indicate a low oil level. The oil level should be checked using the dipstick. (See "Engine oil" (P.471).)**

Hands OFF warning light



When the Steering Assist is activated, it monitors the driver's steering wheel operation. If the steering wheel is not operated or the driver takes his/her hands off the steering wheel for a period of time, the warning light illuminates. If the driver does not operate the steering wheel after the warning light has been illuminated, an audible alert sounds and the warning flashes in the vehicle information display, followed by a quick brake application to request the driver to take control of the vehicle again. If the driver remains unresponsive, the vehicle will automatically turn on the hazard lights and slow to a complete stop. (See "Steering Assist" (P.370).)

Master warning light



When the ignition switch is in the ON position, the master warning light illuminates if a warning message appears in the vehicle information display.

See "Vehicle information display" (P.111).

Seat belt warning light and chime



The light and chime remind you to fasten the seat belts. They operate differently depending on the model. To identify, check the type of the seat belt warning display shown in the vehicle information display.

For models with both the front and rear seat belt warning display:

- The seat belt warning light will illuminate when the ignition switch is placed in the ON position if the driver's seat belt is not fastened, or if the front passenger's seat belt is not fastened when occupied. The chime will sound for a period of time.
- If the driver's or occupied front passenger's seat belt is changed from fastened to unfastened, the seat belt warning light will illuminate until the seat belt(s) are fastened again.
- The seat belt warning light will also illuminate for a period of time if a rear

passenger's seat belt is changed from fastened to unfastened.

- For the driver's or occupied front passenger's seat belt, if the vehicle is driven above certain speed in the conditions that illuminate the seat belt warning light, the light will begin to blink and the chime will sound until the seat belt is fastened again.
- For a rear passenger's seat belt, if the shift position is placed in the D (Drive) or R (Reverse) position in the conditions that illuminate the seat belt warning light, the light will begin to blink and the chime will sound for a period of time, or until the seat belt is fastened again.

For models with only the rear seat belt warning display:

- The seat belt warning light will illuminate when the ignition switch is placed in the ON position if the driver's seat belt is not fastened, or if the front passenger's seat belt is not fastened when occupied.
- The seat belt warning light will also illuminate if a rear passenger's seat belt is changed from fastened to unfastened.
- If the driver's seat belt is not fastened when the ignition switch is placed in the ON position, the chime will sound shortly.
- If the vehicle is driven above certain speed in the conditions that illuminate the seat belt warning light, the light will begin to blink and the chime will sound for a period of time, or until the seat belt is fastened again.

NOTE:
The warning light and/or chime may activate if an object is placed in the unoccupied front passenger seat. In this case, remove the object from the front passenger seat.
The warning light and/or chime may activate if any seat belt is unfastened before the vehicle comes to a complete stop. Please keep the seat belts fastened until the vehicle has come to a complete stop.

Supplemental air bag warning light



After placing the ignition switch in the ON position, the supplemental air bag warning light will illuminate. The supplemental air bag warning light will turn off after about 7 seconds if the supplemental front air bag and supplemental side air bag, curtain air bag systems and/or pretensioner seat belt are operational.
If any of the following conditions occur, the front air bag, side air bag, curtain air bag and pretensioner systems need servicing.

- The supplemental air bag warning light remains on after approximately 7 seconds.
- The supplemental air bag warning light flashes intermittently.
- The supplemental air bag warning light does not come on at all.

It is recommended you visit a NISSAN dealer for these services.
Unless checked and repaired, the Supplemental Restraint Systems and/or the pretensioners may not function properly.
For additional information, see "Supplemental restraint system" (P.68).

⚠ WARNING

If the supplemental air bag warning light is on, it could mean that the front air bag, side air bag, curtain air bag and/or pretensioner systems will not operate in an accident. To help avoid injury to yourself or others, have your vehicle checked. It is recommended you visit a NISSAN dealer for this service.

WARNING/INDICATOR LIGHTS (yellow)

Basic information

See "Vehicle information display" (P.111).

Anti-lock Braking System (ABS) warning light

ABS or 

When the ignition switch is in the ON position, the Anti-lock Braking System (ABS) warning light illuminates and then turns off. This indicates the ABS is operational.

If the ABS warning light illuminates while the engine is running, or while driving, it may indicate the ABS is not functioning properly. Have the system checked. It is recommended you visit a NISSAN dealer for this service.

If an ABS malfunction occurs, the anti-lock function is turned off. The brake system then operates normally, but without anti-lock assistance. (See "Brake system" (P.419).)

Automatic Emergency Braking (AEB) system OFF warning light



When the ignition switch is in the ON position, the AEB system OFF warning light illuminates. After starting the engine, the warning light turns off.

This light illuminates when the AEB with Pedestrian Detection system is set to OFF on the vehicle information display.

If the light illuminates when the AEB with Pedestrian Detection system is ON, it may indicate that the system is unavailable. See "Automatic Emergency Braking (AEB) with Pedestrian Detection system" (P.381) or "Intelligent Forward Collision Warning (I-FCW)" (P.392).

Differential lock indicator (if so equipped)

DIFF LOCK

When the differential lock mode switch is in the "ON" position, the differential lock indicator light will blink and then stay on after the differential gear is completely locked.

See "Rear differential lock system (if so equipped)" (P.412).

Electronic parking brake system warning light



When the ignition switch is in the ON position, the electronic parking brake system warning light illuminates and then turns off.

The electronic parking brake system warning light functions for the electronic parking brake system. If the warning light illuminates, it may indicate that the electronic parking brake system is not functioning properly. Have the brake system checked, and, if necessary, repaired. It is recommended that you visit a NISSAN dealer for this service.

Electric power steering warning light (yellow)



When the electric power steering warning light illuminates in yellow, the power assist to the steering is lowered. At this time, greater steering efforts are required. Securely grip the steering wheel and operate it with greater force than usual. Have the system checked. It is recommended that you visit a NISSAN dealer for this service.

(See "Electric power steering" (P.418).)

Front passenger air bag status light



The front passenger air bag status light will be lit and the front passenger air bag and the front passenger knee air bag will be off depending on how the front passenger seat is being used.

For additional information, see "Front passenger air bag and status light" (P.76).

Hill descent control system on indicator light (if so equipped)



When the ignition switch is placed in the ON position the hill descent control system on

indicator light illuminates briefly and then turns off. This indicates that the hill descent control system is operational.

The light illuminates when the hill descent control system is activated.

If the hill descent control switch is on and the indicator light blinks, the system is not engaged.

If the indicator light does not illuminate or blink when the hill descent control switch is on, the system may not be functioning properly. Have the system checked. It is recommended you contact a NISSAN dealer for this service.

For additional information, see "Hill descent control system (if so equipped)" (P.426).

Low tire pressure warning light



Your vehicle is equipped with a Tire Pressure Monitoring System (TPMS) that monitors the tire pressure of all tires except the spare tire.

The low tire pressure warning light warns of low tire pressure or indicates that the TPMS is not functioning properly.

After the ignition switch is placed in the ON position, this light illuminates for about 1 second and turns off.

Low tire pressure warning:

If the vehicle is being driven with low tire pressure, the warning light will illuminate. The "Tire Pressure Low - Add Air" warning also appears in the vehicle information display.

When the low tire pressure warning light illuminates, you should stop and adjust the tire pressure to the recommended COLD tire pressure shown on the Tire and Loading Information label. The low tire pressure warning light may not automatically turn off when the tire pressure is adjusted. After the tire is inflated to the recommended pressure, the vehicle must be driven at speeds above 16 MPH (25 km/h) to activate the TPMS and turn off the low tire pressure warning light. Use a tire pressure gauge to check the tire pressure.

The "Tire Pressure Low - Add Air" warning is active as long as the low tire pressure warning light remains illuminated.

For additional information, see "Vehicle information display" (P.111), "Tire Pressure Monitoring System (TPMS)" (P.290) and "Tire Pressure Monitoring System (TPMS)" (P.443).

TPMS malfunction:

If the TPMS is not functioning properly, the low tire pressure warning light will flash for approximately 1 minute when the ignition switch is placed in the ON position. The light will remain on after the 1 minute. Have the system checked. It is recommended you visit a NISSAN dealer for this service. The "Tire Pressure Low - Add Air" warning does not appear if the low tire pressure warning light illuminates to indicate a TPMS malfunction.

For additional information, see "Tire Pressure Monitoring System (TPMS)" (P.290).

⚠ WARNING

- **If the light does not illuminate with the ignition switch placed in the ON position, have the vehicle checked. It is recommended you visit a NISSAN dealer for this service as soon as possible.**
- **If the light illuminates while driving, avoid sudden steering maneuvers or abrupt braking, reduce vehicle speed, pull off the road to a safe location and stop the vehicle as soon as possible. Driving with under-inflated tires may permanently damage the tires and increase the likelihood of tire failure. Serious vehicle damage could occur and may lead to an accident and could result in serious personal injury. Check the tire pressure for all four tires. Adjust the tire pressure to the recommended COLD tire pressure shown on the Tire and Loading Information label to turn the low tire pressure warning light OFF. If the light still illuminates while driving after adjusting the tire pressure, a tire may be flat or the TPMS may be malfunctioning. If you have a flat tire, replace it with a spare tire as soon as possible. If no tire is flat and all tires are properly inflated, it is recommended you consult a NISSAN dealer.**

- **Since the spare tire is not equipped with the TPMS, when a spare tire is mounted or a wheel is replaced, the TPMS will not function and the low tire pressure warning light will flash for approximately 1 minute. The light will remain on after 1 minute. Have your tires replaced and/or TPMS system reset as soon as possible. It is recommended you visit a NISSAN dealer for these services.**
- **Replacing tires with those not originally specified by NISSAN could affect the proper operation of the TPMS.**
- **To help avoid serious personal injury or death, when checking your tire pressure, either as part of routine maintenance or because of a TPMS alert, please check the pressure in all of your tires. Driving on under-inflated tires can cause tire failure and interfere with the proper operation of other vehicle systems.**

⚠ CAUTION

- **The TPMS is not a substitute for the regular tire pressure check. Be sure to check the tire pressure regularly.**
- **If the vehicle is being driven at speeds of less than 16 MPH (25 km/h), the TPMS may not operate correctly.**
- **Be sure to install the specified size of tires to the four wheels correctly.**

Malfunction Indicator Light (MIL)



If the malfunction indicator light comes on steady or blinks while the engine is running, it may indicate a potential emission control malfunction.

The malfunction indicator light may also illuminate steady if the vehicle runs out of fuel. Check to make sure that the vehicle has at least 3 US gallons (11.4 liters) of fuel in the fuel tank.

After a few driving trips, the light should turn off if no other potential emission control system malfunction exists.

If this indicator light remains on for 20 seconds and then blinks for 10 seconds when the engine is not running, it indicates that the vehicle is not ready for an emission control system inspection/maintenance test. (See "Readiness for Inspection/Maintenance (I/M) test" (P.558).)

Operation:

The malfunction indicator light will come on in one of two ways:

- Malfunction indicator light on steady — An emission control system malfunction has been detected. It is recommended you visit a NISSAN dealer for this service. You do not need to have your vehicle towed to the dealer.
- Malfunction indicator light blinking — An engine misfire has been detected which may damage the emission control system.

  To reduce or avoid emission control system damage:

  1) Do not drive at speeds above 45 MPH (72 km/h).
  2) Avoid hard acceleration or deceleration.
  3) Avoid steep uphill grades.
  4) If possible, reduce the amount of cargo being hauled or towed.

  The malfunction indicator light may stop blinking and remain on.

  Have the vehicle inspected. It is recommended you visit a NISSAN dealer for this service. You do not need to have your vehicle towed to the dealer.

⚠ CAUTION

Continued vehicle operation without having the emission control system checked and repaired as necessary could lead to poor driveability, reduced fuel economy, and possible damage to the emission control system.

Master warning light



When the ignition switch is in the ON position, the master warning light illuminates if a warning message appears in the vehicle information display.

See "Vehicle information display" (P.111).

Rear Automatic Braking (RAB) system OFF warning light



This light comes on when the ignition switch is placed in the ON position. It turns off after the engine is started.

This light illuminates when the RAB system is turned off in the vehicle information display with the shift position in R (Reverse).

If the light illuminates or blinks when the RAB system is on, it may indicate that the system is unavailable. For additional information, see "Rear Automatic Braking (RAB)" (P.400).

Slip indicator light



When the ignition switch is in the ON position, the slip indicator light illuminates and then turns off.

The light will blink when the Vehicle Dynamic Control (VDC) system or the traction control system is operating, thus alerting the driver that the vehicle is nearing its traction limits. The road surface may be slippery.

If the light illuminates while the VDC system is on, this light alerts the driver to the fact that the VDC system's fail-safe mode is operating, for example the VDC system may not be functioning properly. Have the system checked. It is recommended you visit a NISSAN dealer for this service. If a malfunction occurs in the system, the VDC system function will be canceled but the vehicle is still driveable. For additional information, see "Vehicle Dynamic Control (VDC) system" (P.422).

Vehicle Dynamic Control (VDC) off indicator light



The light comes on when the VDC is turned OFF. This indicates that the VDC system and traction control system are not operating.

Turn the VDC on using the VDC OFF switch, or restart the engine and the system will operate normally. (See "Vehicle Dynamic Control (VDC) system" (P.422).)

The light also comes on when placing the ignition switch in the ON position. The light will turn off after about 2 seconds if the system is operational. If the light stays on or comes on along with the indicator light while you are driving, have the VDC system checked. It is recommended that you visit a NISSAN dealer for this service.

WARNING

The VDC should remain on unless freeing a vehicle from mud or snow.

While the VDC system is operating, you might feel a slight vibration or hear the system working when starting the vehicle or accelerating, but this is not a malfunction.

WARNING/INDICATOR LIGHTS (other)

Basic information

See "Vehicle information display" (P.111).

Automatic brake hold indicator light (white)



The automatic brake hold indicator light (white) illuminates when the automatic brake hold system is on standby. (See "Automatic brake hold" (P.309).)

Automatic brake hold indicator light (green)



The automatic brake hold indicator light (green) illuminates when the automatic brake hold system is operating. (See "Automatic brake hold" (P.309).)

Exterior light indicator



This indicator illuminates when the headlight switch is turned to the AUTO, ≡D◐≡ or ≡◐ position and the front parking lights, rear combination lights, license plate lights or headlights are on. The indicator turns off when these lights are turned off.

Front fog light indicator light (if so equipped)



The front fog light indicator light illuminates when the front fog lights are on. (See "Front fog lights" (P.160).)

High beam assist indicator light



The high beam assist indicator light illuminates when the high beam assist system is turned on and it is operational. (See "High beam assist" (P.157).)

High beam indicator light



This light illuminates when the headlight high beam is on and goes out when the low beam is selected.

Low beam indicator light



The low beam indicator light illuminates when the headlight low beam is on. The indicator turns off when the high beam is selected. (See "Headlight and turn signal switch" (P.155).)

Turn signal/hazard indicator lights



The light flashes when the turn signal switch lever or hazard switch is turned on.

AUDIBLE REMINDERS

Light reminder chime

The light reminder chime will sound when the headlight switch is placed in the ≡D◐≡ or ≡◐ position after the engine was turned off, and the driver's door is opened with the light is on.
Turn the light switch to the OFF (if so equipped) or AUTO position when you leave the vehicle.

Driving Aid chimes

An audible alert/chime may be heard if any of the following systems are active:

- Lane Departure Warning (LDW)*
- Intelligent Lane Intervention (I-LI)*
- Blind Spot Warning (BSW)
- Intelligent Blind Spot Intervention (I-BSI)
- Rear Cross Traffic Alert (RCTA)
- ProPILOT Assist
- Automatic Emergency Braking (AEB) with Pedestrian Detection
- Intelligent Forward Collision Warning (I-FCW)
- Rear Automatic Braking (RAB)
- Sonar system
- Rear Sonar System (RSS)
- Intelligent Driver Alertness (I-DA)

*Only when the Steering Assist is turned on
For additional information, refer to the "5. Starting and driving" section.

Door lock warning chime

When the chime sounds, be sure to check both the vehicle and the Intelligent Key. See "Troubleshooting guide" (P.204).

Brake pad wear warning

The disc brake pads have audible wear warnings. When a brake pad requires replacement, it will make a high pitched scraping sound when the vehicle is in motion. This scraping sound will first occur only when the brake pedal is depressed. After more wear of the brake pad, the sound will always be heard even if the brake pedal is not depressed. Have the brakes checked as soon as possible if the warning sound is heard.

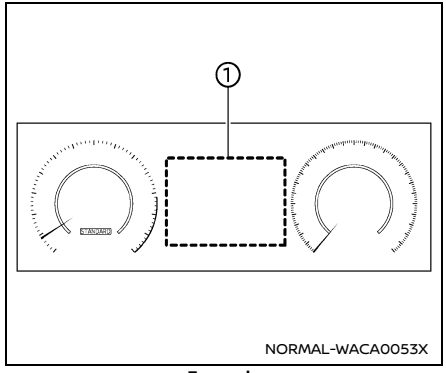

Example

BASIC INFORMATION

The vehicle information display ① is located as shown above, and it displays the warnings and information. The following items are also displayed if the vehicle is equipped with them:

- Tachometer
- Speedometer
- Vehicle settings
- Trip computer information
- Driver Assistance
- ProPILOT Assist
- Intelligent Key operation information
- Audio information
- Navigation - turn by turn
- Indicators and warnings
- Tire pressure information
- Other information

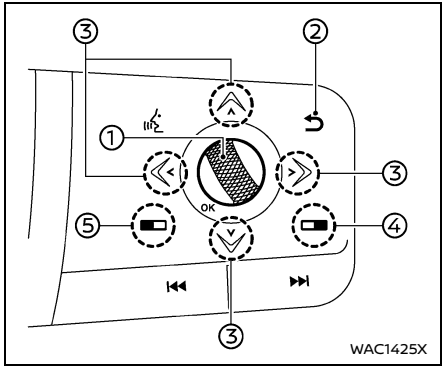

Type A

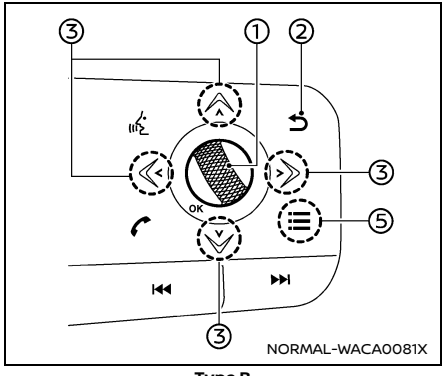

Type B

HOW TO USE THE VEHICLE INFORMATION DISPLAY

The vehicle information display can be changed using the dial and buttons located on the steering wheel.

① Scroll dial - navigate through the items and change or select an item in vehicle information display
this scroll dial allows up/down navigation and push to select

② ↩ - go back to the previous menu

③ Up/down/left/right arrows - change from one display screen category to the next (i.e. trip, Fuel economy)

④ Push to operate the touch screen display by the steering-wheel-mounted controls. See "Touch screen display" (P.143) for additional information.

⑤ Type A: Push to operate the vehicle information display by the steering-wheel-mounted controls.
Type B: Display the "Shortcut Menu" screen.

Shortcut Menu

If you push the ⑤ button while the color of the ⑤ button is in orange (Type A) or when the ☰ button ⑤ is pushed (Type B), the "Shortcut Menu" screen will appear on the vehicle information display. Select the menu by rotating the scroll dial ① and push it.
The following menus are available:

- Trailer Blind Spot
  Allows user to turn ON/OFF the trailer blind spot function. (See "Blind Spot Warning (BSW)" (P.325).)
- Change Meter View
  Allows user to change the meter screen view. (See "Changing the meter screen view" (P.97).)
- Audio Source
  Allows user to select the available audio source. (See the separate NissanConnect® Owner's Manual for the audio system.)
- Driver Assistance
  Allows user to change the "Driver Assistance" settings. (See "Driver Assistance" (P.113).)

STARTUP DISPLAY

When the ignition switch is placed in the ON position, the vehicle information display may display the following screens if the vehicle is equipped with them:

- Home
- Blank
- Drive Computer
- Fuel Economy
- ECO Pedal Guide
- Air suspension
- Off Road
- Tire Pressures
- Idling Stop
- AWD Torque
- Navigation

- Compass
- Audio
- Driver Assistance
- ProPILOT Assist
- Speed Limit Sign
- Warnings
- Settings

Warnings will only display if there are any present. For more information on warnings and indicators, see "Vehicle information display warnings and indicators" (P.121).

To control what items display in the vehicle information display, see "Settings" (P.113).

SETTINGS

Basic information

The setting mode allows user to change the information displayed in the vehicle information display and some settings:

- Driver Assistance
- Head-Up Display (if so equipped)
- ECO Mode Setting
- TPMS Setting
- Clock
- Vehicle Settings
- Towing Settings
- Maintenance
- Customize Display
- Unit/Language
- Factory Reset

Driver Assistance

To change the status, warnings or turn on or off any of the systems/warnings displayed in the "Driver Assistance" menu, use the scroll dial to select and change a menu item:

- Intelligent Cruise (if so equipped)
- Lane Centering Assist
- Lane Change Assist (if so equipped)
- Lane Assist
- Blind Spot Assist
- Emergency Assist
- Traffic Sign Assist
- Parking Assist
- Driver Monitor
- Sound Setting (if so equipped)
- Timer Alert
- Low Temp. Alert
- Chassis Control

Intelligent Cruise (if so equipped):

To change the status or turn on or off any of the systems displayed in this menu, use the scroll dial to select and change a menu item:

- Speed Adjust by Route
  Allows user to turn the Speed Adjust by Route function ON/OFF. (See "Speed Adjust by Route (a feature of ProPILOT Assist 2.1)" (P.369).)
- Spd.Limit Assist
  Allows user to customize the Speed Limit Assist options.
  - OFF
  - Manual
  - Auto

  (See "Speed Limit Assist (a feature of ProPILOT Assist 2.1)" (P.368).)
- Speed Limit Offset
  Allows user to customize the Speed Limit Offset tolerance (-5 MPH (-10 km/h) to +5 MPH (+10 km/h)).

Lane Centering Assist:

- Steering Assist
  Allows user to turn the Steering Assist function ON/OFF. (See "Steering Assist" (P.370).)
- Hands Off Mode (if so equipped)
  Allows user to turn the Hands Off Mode function ON/OFF. (See "Steering Assist with HD map data (a feature of ProPILOT Assist 2.1)" (P.373).)

Lane Change Assist (if so equipped):

- Activate by turn signal
  Allows user to turn this function ON/OFF.
- Passing Assist
  Allows user to turn this function ON/OFF.
- Passing Setting
  Allows user to customize the Passing Setting option.
  - Sport
  - Standard
  - Comfort

  (See "Lane Change Assist (ProPILOT Assist 2.1)" (P.376) for details of these functions.)

Lane Assist:

- Warning
  Allows user to turn the Lane Departure Warning (LDW) system ON/OFF.
- Intervention
  Allows user to turn the Intelligent Lane Intervention (I-LI) system ON/OFF.
- Lane Sensitivity
  Allows user to select the strength of Lane Sensitivity (Strong, Normal or Mild).

(See "Lane Departure Warning (LDW)/Intelligent Lane Intervention (I-LI)" (P.319).)

Blind Spot Assist:

- Warning
  Allows user to turn the Blind Spot Warning (BSW) system ON/OFF.
- Intervention
  Allows user to turn the Intelligent Blind Spot Intervention (I-BSI) system ON/OFF.
- Trailer Blind Spot
  Allows user to turn the Trailer Blind Spot function ON/OFF.

(See "Blind Spot Warning (BSW)" (P.325) and "Intelligent Blind Spot Intervention (I-BSI)" (P.333).)

Emergency Brake:

Allows user to turn the Automatic Emergency Braking (AEB) with Pedestrian Detection system and Intelligent Forward Collision Warning (I-FCW) system ON/OFF.
(See "Automatic Emergency Braking (AEB) with Pedestrian Detection system" (P.381) and "Intelligent Forward Collision Warning (I-FCW)" (P.392).)

Traffic Sign Assist:

Allows user to turn the Traffic Sign Assist system options below ON/OFF.

- Speed Limit Sign
- Speed Limit Warning (if so equipped)

(See "Traffic Sign Recognition (TSR)" (P.316).)

Parking Assist:

To change the status or turn on or off any of the systems displayed in the "Parking Assist" menu, use the scroll dial to select and change a menu item (the displayed order varies depending on models):

- Rear Cross Traffic Alert
  Allows user to turn the Rear Cross Traffic Alert system ON/OFF. (See "Rear Cross Traffic Alert (RCTA)" (P.343).)
- Moving Object (if so equipped)
  Allows user to turn the Moving Object Detection (MOD) ON/OFF.
- Front Sonar
  Allows user to turn the front sonar sensors ON/OFF.
- Rear Sonar
  Allows user to turn the rear sonar sensors ON/OFF.
  When the Trailer BSW function is activated, this menu cannot be selected. (See "Trailer BSW function operation" (P.330).)
- Sonar Distance
  Allows user to select the sonar sensor's detection distance (Long, Medium or Short).
- Auto Show Sonar
  Allows user to turn the sonar system display ON/OFF.
- Sonar Volume
  Allows user to select the volume of the sonar tone (High, Medium or Low).

(See "Moving Object Detection (MOD) (if so equipped)" (P.261) and "Front and rear sonar system" (P.427).)

Driver Monitor:

- Driver Alertness
  Allows user to turn the Intelligent Driver Alertness (I-DA) system ON/OFF. (See "Intelligent Driver Alertness (I-DA)" (P.398).)
- Driver Monitor (if so equipped)
  Allows user to turn the Driver Monitor system ON/OFF. (See "Driver Monitor (ProPILOT Assist 2.1)" (P.375).)

Sound Setting (if so equipped):

- Warning Volume
  Allows user to select the volume of the warning sound (High, Medium or Low).

Timer Alert:

Allows user to adjust the Timer Alert or reset.

- (Current Time)/(Set Time)
- Reset

Low Temp. Alert:

Allows user to turn the Low Temperature Alert function ON/OFF.

Chassis Control:

- Trace Control

Allows user to turn the function ON/OFF. (See "Intelligent Trace Control" (P.425).)

Head-Up Display (if so equipped)

To change the status or turn on or off any of the systems displayed in the "Head-Up Display" menu, use the scroll dial to select and change a menu item:

- Brightness
- Height
- Rotation
- Contents selection
  - Navigation
  - Driving Assist
  - Speed Limit Sign
  - Audio
  - TEL/SMS
- Reset

(See "Head Up Display (HUD) (if so equipped)" (P.146).)

ECO Mode Setting

This setting allows user to change the ECO mode system settings.

To change the status or turn on or off any of the systems displayed in the "ECO Mode Settings" menu, use the scroll dial to select and change a menu item:

- ECO Customize (if so equipped)
  - Cruise Control
  - Idling stop
  - Air Conditioning

  For additional information, see "ECO Customize (if so equipped)" (P.313).
- ECO Drive Assist
  - ECO Drive Report

  For additional information, see "ECO Drive Report" (P.101).
- View History

  To reset the View History:
  1. Select "View History" using the scroll dial and push it.
  2. Push the scroll dial.
  3. Select "Yes" by pushing the scroll dial.

  For additional information, see "ECO Drive Report" (P.101).
- Tire Pres ECO advice

  Push the scroll dial to turn the "Tire Pres ECO advice" ON/OFF.

  For additional information, see "Tire Pres ECO advice" (P.313).

TPMS Setting

The following submenu appears.

Tire Pressure Unit:

The unit for tire pressure that is shown in the vehicle information display can be changed to:

- psi
- kPa
- bar
- kgf/cm^2

Use the scroll dial to select and change the unit.

Clock

Allows user to turn ON or OFF the clock display on the vehicle information display.

Vehicle Settings

The vehicle settings allows user to change settings for the following menus.

- Power Back Door (if so equipped)
- Lighting
- Locking
- Wipers
- Driving Position (if so equipped)
- Rear Door Alert
- Mirrors (if so equipped)

The vehicle settings can be changed using the scroll dial.

Power Back Door (if so equipped):

This allows user to turn the power liftgate ON or OFF.

Lighting:

The "Lighting" menu has the following options:

- Welcome Lights
  The welcome lighting can be set to be ON or OFF. Use the scroll dial to turn this feature ON or OFF.
- Accent Lighting (if so equipped)
  The brightness of the Accent Lighting can be adjusted. Use the scroll dial to select the brightness.
- Light Off Delay
  The duration of the automatic headlights can be changed from 0 to 180 seconds. Use the scroll dial to change the duration.

Locking:

The "Locking" menu has the following options:

- Selective Unlock
  When this item is turned on, and the door handle request switch on the driver's side door or the liftgate request switch (if so equipped) is pushed, only the corresponding door/liftgate is unlocked. All the doors can be unlocked if you push the same request switch within 60 seconds. When this item is turned to off, all the doors will be unlocked when using the request switch once. Use the scroll dial to activate or deactivate this function.
- Horn beeps on lock
  When this item is turned on, the horn will chirp and the hazard indicators will flash twice when locking the vehicle with the Intelligent Key. Use the scroll dial to activate or deactivate this function.
- Auto Door Unlock
  The "Auto Door Unlock" feature allows user to customize the auto door unlock options. Use the scroll dial to change the mode.
  – Shift to P
  – Ignition OFF
  – OFF
- Walk Away Lock
  When this item is turned on, the walk away lock function is activated. Use the scroll dial to activate or deactivate this function. (See "Walk away lock function" (P.203).)
- Approach Unlock
  When this item is turned on, the approach unlock function is activated. Use the scroll dial to activate or deactivate this function. (See "Approach unlock function" (P.203).)
- Ext. Door Switch
  When this item is turned on, the request switches are activated. Use the scroll dial to activate or deactivate this function.
  When this item is turned off, the Walk Away Lock and the Approach Unlock function are also deactivated.

Wipers:

The "Wipers" menu has the following options:

- Rain Sensor
  The rain-sensing auto wiper system can be activated or deactivated. Use the scroll dial to turn this system ON or OFF.
- Reverse Link
  The "Reverse Link" wiper feature can be set to be ON or OFF. Use the scroll dial to turn this feature ON or OFF. (See "Rear window wiper and washer operation" (P.153).)
- Drip Wipe
  The drip wipe feature can be set to ON or OFF. Use the scroll dial to turn this feature ON or OFF. (See "Wiper and washer switch" (P.151).)

Driving Position (if so equipped):

- Exit Seat Slide
  This allows user to turn the "Exit Seat Slide" feature of the entry/exit function ON or OFF. Use the scroll dial to turn this feature ON/OFF. (See "Memory seat (if so equipped)" (P.233).)
- Exit Steering
  This allows user to turn the "Exit Steering" feature of the entry/exit function ON or OFF. Use the scroll dial to turn this feature ON/OFF. (See "Memory seat (if so equipped)" (P.233).)

Rear Door Alert:

Type A (if so equipped):
This allows user to customize the Rear Door Alert options. Use the scroll dial to change the mode.

- Horn & Alert
- Alert Only
- OFF

(See "Rear Door Alert" (P.167).)

Type B (if so equipped):
This allows user to turn the Rear Door Alert ON or OFF.
(See "Rear Door Alert" (P.167).)

Mirrors (if so equipped):

Allows user to select one of the following items of the outside mirrors:
- Auto Fold Off
- Unfold at Ignition
- Unfold at Unlock

Towing Settings

The towing settings menu allows the user to access the following trailer related items.

Trailer Light Check:

Allows user to start the check in which the vehicle will test various lights that could affect a trailer if connected properly. This feature can also be activated using the Intelligent Key.
For additional information, see "Intelligent Key system" (P.199) and "Towing a trailer" (P.537).

Trailer Information:

The registered and currently selected trailer information is displayed.
- Trailer Length
- Trailer BSW ON/OFF

Select Trailer:

Allows user to select a registered trailer.
- Trailer name1 - Trailer name9 (appears if trailers are registered)
- Default Trailer

Edit Setting:

Allows user to name, set length or delete the information of trailers.
This menu becomes selectable after you add a trailer information by "Add Trailer for BSW" menu.
- Trailer name1 - Trailer name9
  - Rename Trailer
    You can rename the trailer letter by letter, by rotating and pushing the scroll dial.
  - Edit Length
    When this item is selected, below message will be displayed.
    "Is the width less than 9ft (2.7m) and the length less than 33ft (10m) ?"
    Select "Yes" to edit the trailer length by rotating and pushing the scroll dial. Push "OK" to save the trailer information.
    If you select "No", then the "Trailer BSW is unavailable when this trailer connected" message will be displayed. See "Add Trailer for BSW" for more details.
  - Delete Setting
    When this item is selected, below message will be displayed.
    "Delete This Trailer?"
    Select "Yes" to delete the registered trailer information.

Add Trailer for BSW:

When this item is selected, below message will be displayed.
"Is the width less than 9ft (2.7m) and the length less than 33ft (10m) ?"

NOTE:
The trailer length is the length from the rear bumper of the vehicle to the end of the attached trailer Ⓐ.

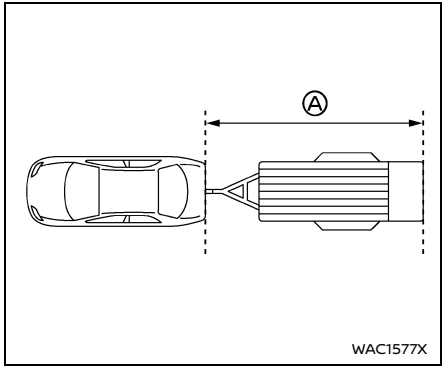

- **Yes:** You can edit the trailer length by rotating and pushing the scroll dial. Push "OK" to save the trailer information.
  Then you can name the trailer letter by letter, by rotating and pushing the scroll dial under the "Name" screen. Push "OK" to save the trailer information.
- **No:** The "Trailer BSW is unavailable when this trailer connected" message will be displayed. The trailer cannot be added for the BSW system.

See "Blind Spot Warning (BSW)" (P.325) for the details of the BSW system.

Maintenance

The maintenance mode allows user to check the distance to oil change or set alerts for the reminding of maintenance intervals.

Select "Maintenance" using the scroll dial and push it.

- Oil Level
- Oil Control System
- Tire
- Other
- Suspension (if so equipped)

Oil Level:

The Oil Level menu allows user to check the engine oil level on the vehicle information display.

To check the oil level:

To check the engine oil level, select "Oil Level".

The oil level and status can be measured automatically at every trip.

"Oil Level OK": The engine oil level is correct.

"Low Oil Level": The engine oil level is too low. Please add the appropriate amount of engine oil and then recheck the engine oil level. See "Engine oil" (P.471).

"High Oil Level": The engine oil level is too high. Please reduce the appropriate amount of engine oil and then recheck the engine oil level. See "Engine oil" (P.471). It is recommended you visit a NISSAN dealer for this service.

How to update the Oil Level:

To update the engine oil level, perform the following steps.

1. Park the vehicle on a level surface and apply the parking brake.
2. Run the engine until it reaches operating temperature.
3. Turn off the engine. Wait more than 10 minutes for the oil to drain back into the oil pan.
4. Place the ignition switch ON without stepping on the brake (see "Push-button ignition switch operation" (P.298)). Do not start the engine.
5. Select "Settings", then "Maintenance", then "Oil Level".
6. Push the scroll dial to select "Update Oil Level" to measure the engine oil level again.
   If you select the "Update Oil Level" while the engine is running, "Turn off engine to update Oil Level" message is displayed.

NOTE:
In order to measure the oil level correctly, NISSAN recommends performing the above steps before measuring the oil level. Otherwise, the measured oil level may not be accurate.

Oil Control System:

The Oil Control System informs the distance to oil change. Never exceed 10,000 miles (16,000 km) between oil change intervals.

- **Display when ignition is ON**: Engine Oil Service due in xxx miles
  - **Display timing**: Remaining oil life is less than 940 miles (1,500 km).
  - **Action Required**: Plan to have your vehicle serviced.

- **Display when ignition is ON**: Engine Oil Service due
  - **Display timing**: Remaining oil life is 0 miles (0 km).
  - **Action Required**: Have your vehicle serviced within two weeks or less than 500 miles (800 km).

The oil change interval cannot be adjusted manually.

The distance to oil change interval is calculated depending on the driving conditions and set automatically by the oil control system. A reminder will be displayed when approaching the end of the service interval.

When the Factory Reset option is selected in the vehicle information display, the oil control system will also be reset to initial value. Please change the engine oil when Factory Reset is selected.

CAUTION

If the oil replacement indicator is displayed, change the engine oil within two weeks or less than 500 miles (800 km).

Operating the vehicle with deteriorated oil can damage the engine.

To reset oil control system:

1. Place the ignition switch in the ON position.
2. Push the ◀ and ▶ buttons on the steering wheel until "Settings" appears in the vehicle information display. Use the scroll dial to select "Maintenance". Then, push the scroll dial.
3. Select the "Oil Control System" and push the scroll dial.
4. Push the scroll dial according to the reset instructions displayed at the bottom of the "Oil Control System" maintenance screen.

If your oil replacement indicator resets prematurely or becomes inoperative, please change the oil within 5,000 miles (8,000 km) from your last oil change.

Tire:

This indicator appears when the user set distance comes for replacing tires. You can set or reset the distance for replacing tires.

WARNING

The tire replacement indicator is not a substitute for regular tire checks, including tire pressure checks. (See "Changing wheels and tires" (P.498).) Many factors including tire inflation, alignment, driving habits and road conditions affect tire wear and when tires should be replaced. Setting the tire replacement indicator for a certain driving distance does not mean your tires will last that long. Use the tire replacement indicator as a guide only and always perform regular tire checks. Failure to perform regular tire checks, including tire pressure checks could result in tire failure. Serious vehicle damage could occur and may lead to a collision, which could result in serious personal injury or death.

Other:

This indicator appears when the user set distance comes for checking or replacing maintenance items other than the engine oil, oil filter and tires. Other maintenance items can include such things as air filter or tire rotation. You can set or reset the distance for checking or replacing the items.

Suspension (if so equipped):

- System
  Allows user to turn ON or OFF the air suspension system.
  (See "Air suspension system (if so equipped)" (P.413) for details.)

If you turned OFF the air suspension system, it will automatically turn ON when the vehicle starts driving.

Customize Display

The display settings allows user to choose from the various meter selections.
The display settings can be changed using the scroll dial.

Change Meter View:

Allows user to turn select the meter view.
(See "Changing the meter screen view" (P.97) for details.)

Main Menu Selection:

Displays available screens that can be shown in the vehicle information display.

Route Guidance (if so equipped):

To change the setting, use the scroll dial to select and push it.

- Alerts

The "Alerts" allows user to turn the Navigation Settings alerts ON or OFF.

ProPILOT Assist Display:

Allows user to turn the ProPILOT Assist Display transition ON or OFF.

Welcome Effect:

The "Welcome Effect" displays the available welcome effect settings.

- Animation
- Sound

Operation Guidance:

The "Operation Guidance" displays the available operation guidance settings.

- Lights
- Wiper
  - Front
  - Rear
- High Beam Assist
- Seat Memory (if so equipped)

Unit/Language

The units that are shown in the vehicle information display can be changed:

- Mileage/Fuel
- Tire Pressure
- Temperature
- Language

Use the scroll dial to select and change the units of the vehicle information display.

Mileage/Fuel:

The unit for the mileage that is shown in the vehicle information display can be changed. (The displayed order varies depending on models.)

- miles, MPG
- km, km/l
- km, l/100km

Use the scroll dial to select and change the unit.

Tire Pressure:

The unit for tire pressures that is shown in the vehicle information display can be changed to:

- psi
- kPa
- bar
- kgf/cm^2

(See "TPMS Setting" (P.115).)

Temperature:

The temperature that is shown in the vehicle information display can be changed from:

- °C
- °F

Use the scroll dial to toggle choices.

Language:

The language of the vehicle information display can be changed.
Use the scroll dial to select and change the language.

Factory Reset

The settings in the vehicle information display can be reset back to the factory default. To reset the vehicle information display:

1. Select "Factory Reset" using the scroll dial and push it.
2. Select "Yes" to return all settings back to default by pushing the scroll dial.

NOTE:
When the factory reset is implemented, the added trailer information for the trailer BSW will be deleted. (See "Towing Settings" (P.117).)

VEHICLE INFORMATION DISPLAY WARNINGS AND INDICATORS

Engine start operation indicator



Push brake and start switch to drive

This indicator appears when the shift position is in the P (Park) position.
This indicator means that the engine will start by pushing the ignition switch with the brake pedal depressed. You can start the engine directly in any position of the ignition switch.

Key Not Detected warning



Key Not Detected
Please ensure a valid key is present in the vehicle

This warning appears when the door is closed with the Intelligent Key left outside the vehicle and the engine is running. Make sure that the Intelligent Key is inside the vehicle.
See "Intelligent Key system" (P.199) for more details.

Key Battery Low warning



Key Battery Low

This warning appears when the Intelligent Key battery is running out of power.
If this indicator appears, replace the battery with a new one. See "Intelligent Key battery replacement" (P.486).

Engine start operation for Intelligent Key system indicator



Place the key near the start switch

This indicator appears when the Intelligent Key battery is running out of power and when the Intelligent Key system and vehicle are not communicating normally.
If this indicator appears, touch the ignition switch with the Intelligent Key while depressing the brake pedal. (See "Intelligent Key battery discharge" (P.299).)

Key System Error: See Owner's Manual warning



Key System Error
See Owner's Manual

This warning appears if there is a malfunction in the Intelligent Key system.
If this warning appears while the engine is stopped, the engine cannot be started. If this warning appears while the engine is running, the vehicle can be driven. However, it is recommended that you visit a NISSAN dealer for repair as soon as possible.

Release Parking Brake warning

Release Parking Brake

This warning appears when the accelerator pedal is depressed when the electronic parking brake automatic release function cannot be used. Release the electronic parking brake manually.

Low Fuel warning



Low Fuel

This warning appears when the fuel level in the fuel tank is getting low. Refuel as soon as it is convenient, preferably before the fuel gauge reaches 0 (Empty). There will be a small reserve of fuel in the tank when the fuel gauge needle reaches 0 (Empty).

Low Washer Fluid warning



Low Washer Fluid

This warning appears when the window washer fluid is at a low level. Add window washer fluid as necessary. For additional information, refer to "Window washer fluid" (P.475).

Door/liftgate open warning



This warning appears if any of the doors and/or the liftgate are open or not closed securely. The vehicle icon indicates which door or the liftgate is open on the display.

Front and rear seat belt warning (if so equipped)



- This warning includes display of the seat belts for front and rear seating positions. Any seat belt that is unfastened will appear red and fastened will appear green.
- When the ignition switch is placed in the ON position, this warning will be displayed for a period of time to check the seat belt conditions for all seats.
- If a rear seat belt is changed from fastened to unfastened, this warning will be displayed and the seat belt warning light will turn ON for a period of time.
- If the shift position is placed in the D (Drive) or R (Reverse) position during or after the rear seat belt buckle status change, this warning will be displayed, the seat belt warning light will blink and the chime will sound for a period of time, or until the rear seat belt(s) are buckled again.

NOTE:
Opening and closing a rear door while the vehicle is stopped will reset this warning for rear seat belt conditions, similar to placing the ignition switch in the ON position again.

For precautions on seat belt usage, see "Seat belts" (P.35).

Rear seat belt warning (if so equipped)



- This warning includes display of the seat belts for rear seating positions. Rear seat belts that are unfastened will appear red and fastened will appear green.
- If any rear seat belts are not fastened when the ignition switch is placed in the ON position, this warning will be displayed for a period of time.
- When a rear seat belt is changed from fastened to unfastened, this warning will be displayed for a period of time and the seat belt warning light will turn ON.
- If the vehicle is driven above certain speed during or after the rear seat belt buckle status change, this warning will be displayed, the seat belt warning light will blink, and the chime will sound for a period of time, or until the rear seat belt(s) are buckled again.

NOTE:
Opening and closing a rear door while the vehicle is stopped will reset this warning, similar to placing the ignition switch in the ON position again.

For precautions on seat belt usage, see "Seat belts" (P.35).

Tire Pressure Low — Add Air warning



Tire Pressure Low
Add Air

This warning appears when the low tire pressure warning light in the meter illuminates and low tire pressure is detected. The warning appears each time the ignition switch is placed in the ON position as long as the low tire pressure warning light remains illuminated. If this warning appears, stop the vehicle and adjust the pressure to the recommended COLD tire pressure shown on the Tire and Loading Information label. (See "Low tire pressure warning light" (P.107) and "Tire Pressure Monitoring System (TPMS)" (P.290).)

Shift to P range warning



Shift to P range

This warning appears when the driver's door is opened while the shift position is in any position other than P (Park).

If this warning appears, push the park button to engage the P (Park) position.

An inside warning chime will also sound. (See "Intelligent Key system" (P.199).)

Some modes not available in 4LO indicator (if so equipped)

Some modes not available in 4LO

This indicator appears when any of the following drive mode is selected while the 4L mode is selected.

- ECO
- SPORT

(See "Drive Mode Selector (if so equipped)" (P.312).)

4HI/4LO is not available in current Drive mode indicator (if so equipped)

4HI/4LO is not available in current Drive mode

This indicator appears when you push the 4WD shift switch to change the driving mode between AUTO and 4H/4L (if so equipped) while the following drive mode is selected.

- ECO
- SPORT

(See "Drive Mode Selector (if so equipped)" (P.312).)

AWD AUTO is not available in current Drive mode indicator (if so equipped)

AWD AUTO is not available in current Drive mode

This indicator appears when you push the 4WD shift switch to change the driving mode between 4H/4L and AUTO while the following drive mode is selected.

- SAND
- MUD/RUT
- ROCK

(See "Drive Mode Selector (if so equipped)" (P.312).)

Four-Wheel Drive (4WD) shift indicator (if so equipped)



This indicator shows the Four-Wheel Drive (4WD) driving mode (AUTO, 4H or 4L) that is selected by the 4WD shift switch. (See "NISSAN All-Mode 4WD® (if so equipped)" (P.407).)

For 4HI/4LO shift to N and apply brake indicator (if so equipped)

For 4HI/4LO shift to N and apply brake

This indicator appears when you push the

4WD shift switch to change the driving mode between 4H and 4L, or between AUTO and 4L, without shifting the transmission to the N (Neutral) position and depressing the brake pedal. (See "NISSAN All-Mode 4WD® (if so equipped)" (P.407).)

To engage Diff-lock vehicle must be stopped and in 4LO indicator (if so equipped)

To engage Diff-lock vehicle must be stopped and in 4LO

This indicator appears when you push the differential lock mode switch to the ON position, without shifting the 4WD mode to the 4L and vehicle stop. (See "Rear differential lock system (if so equipped)" (P.412).)

Automatic Transmission (AT) position indicator



This indicator shows the AT shift position.

In the manual shift mode, when the transmission does not shift to the selected gear due to a transmission protection mode, the AT position indicator will blink and a chime will sound.

See "Automatic Transmission (AT)" (P.302) for further details.

AT Malfunction Service now warning

AT Malfunction Service now

This warning appears when there is a malfunction with the AT system. If this warning appears, have the system checked. It is recommended that you visit a NISSAN dealer for this service.

AT hot Power reduced warning

AT hot Power reduced

The AT has a high fluid temperature protection mode. If the fluid temperature becomes too high (for example, climbing steep grades in high temperatures with heavy loads), engine power and, under some conditions, vehicle speed will be decreased automatically to reduce the chance of transmission damage. Vehicle speed can be controlled with the accelerator pedal, but the engine and vehicle speed may be reduced.

AT Malfunction Stop safely warning

AT Malfunction Stop safely

This warning appears when there is a malfunction with the AT system. If this warning appears, stop the vehicle in a safe place. Have the system checked. It is recommended you visit a NISSAN dealer for this service.

Service AT Power reduced warning

Service AT Power reduced

This warning appears when the AT power is reduced. If this warning appears, have the system checked. It is recommended that you visit a NISSAN dealer for this service.

Steering system malfunction Stop safely warning

Steering system malfunction Stop safely

When this warning appears, the electric power steering does not operate. Stop the vehicle in a safe place immediately. Have the system checked. It is recommended that you visit a NISSAN dealer for this service. (See "Electric power steering" (P.418).)

Steering system malfunction Visit dealer warning

Steering system malfunction Visit dealer

When this warning appears, the power assist to the steering is lowered. At this time, greater steering efforts are required. Securely grip the steering wheel and operate it with greater force than usual. Have the system checked. It is recommended that

you visit a NISSAN dealer for this service. (See "Electric power steering" (P.418).)

Drive Mode Selector indicator (if so equipped)



When a driving mode is selected using the Drive Mode Selector, the selected mode indicator is displayed if the vehicle is equipped with them.

- STANDARD
- ECO
- SPORT
- TOW
- SNOW
- ROCK (4WD models)
- SAND (4WD models)
- MUD/RUT (4WD models)

(See "Drive Mode Selector (if so equipped)" (P.312).)

AWD error Apply parking brake warning (if so equipped)



This warning appears when the Automatic Transmission (AT) parking function is not engaged. If the transfer control is not secured in any driving mode while the AT shift position is in the P (Park) position, the transmission will disengage and the wheels will not lock. If this warning appears with the shift position in the P (Park) position, push the 4WD shift switch to the AUTO, 4H or 4L (if so equipped) position again with the shift position in the N (Neutral) position and depressing the brake pedal. (See "NISSAN All-Mode 4WD® (if so equipped)" (P.407).)

AWD Error: See Owner's Manual warning (if so equipped)



This warning appears when the Four-Wheel Drive (4WD) system is not functioning properly while the engine is running. Reduce vehicle speed and have your vehicle checked as soon as possible. It is recommended that you visit a NISSAN dealer for this service. (See "NISSAN All-Mode 4WD® (if so equipped)" (P.407).)

AWD High Temp. Stop vehicle warning (if so equipped)



This warning appears when the temperature of transfer case increases. If this warning is displayed, stop the vehicle with the engine idling, as soon as it is safe to do so. In these cases, the 4WD changes to 2WD to protect the powertrain parts. Then if the warning turns off, you can continue 4WD driving. (See "NISSAN All-Mode 4WD® (if so equipped)" (P.407).)

Tire Size Incorrect: See Owner's Manual warning (if so equipped)



This warning may appear if there is a large difference between the diameters of front and rear wheels and tires. Pull off the road in a safe area, with the engine idling. Check that all the tire sizes, brand, construction and tread pattern are the same, that the tire pressures are correct and that the tires are not excessively worn. If you have any problems, change tires or adjust tire pressures

correctly. Do not select the SAND, MUD/RUT, ROCK or SNOW mode with the Drive Mode Selector (if so equipped). Change the 4WD shift switch to AUTO mode and do not drive fast. (See "NISSAN All-Mode 4WD® (if so equipped)" (P.407).)

Depending on the driving conditions, this warning may also appear when a spare tire is installed. (See "Spare tire" (P.501).)

AWD error Do not drive at high speed Service now warning (if so equipped)

AWD

AWD error
Do not drive at high speed
Service now

This warning appears when the 4WD system is malfunctioning. Avoid driving at high speeds and have your vehicle checked. It is recommended that you visit a NISSAN dealer for this service. (See "NISSAN All-Mode 4WD® (if so equipped)" (P.407).)

Shipping Mode On Push Storage Fuse warning

Shipping Mode On
Push Storage Fuse

This warning may appear if the extended storage switch is not pushed in. When this warning appears, push in the extended storage switch to turn off the warning. (See "Extended storage fuse switch" (P.486).)

Power will turn off to save the battery warning

Power will turn off
to save the battery

Under the specific conditions, this warning may appear after the ignition switch is in the ON position for a certain period of time.

Power turned off to save the battery warning

Power turned off
to save the battery

Under the specific conditions, this warning may appear after the ignition switch is automatically turned OFF to save the battery.

Reminder Turn OFF Headlights warning



Reminder Turn OFF Headlights

The warning appears when the headlight switch is placed in ≡DC≡ or position after the engine was turned off, and the driver's door is opened with the light is on.

Turn the light switch to the OFF (if so equipped) or AUTO position when you leave the vehicle.

Headlight System Error: See Owner's Manual warning

Headlight System Error
See Owner's Manual

This warning appears if the LED headlights are malfunctioning. Have the system checked. It is recommended that you visit a NISSAN dealer for this service.

Time for a break? indicator



Time for a break?

This indicator appears when the set Timer Alert activates. You can set the time for up to 6 hours.

Chassis Control System Error: See Owner's Manual warning

Chassis Control System Error
See Owner's Manual

This warning appears if the chassis control module detects a malfunction in the chassis control system. Have the system checked. It is recommended that you visit a NISSAN dealer for this service. (See "Chassis control" (P.425).)

Check Rear Seat indicator (if so equipped)

Check Rear Seat
Dismiss Message
Disable Alert

When the system is enabled, this message appears when the Rear Door Alert system is active and can remind the driver to check the rear seat.

- Using the steering switch, the driver can select "Dismiss Message" to clear the display for a period of time.
- Using the steering switch, the driver can select "Disable Alert" to disable the horn alert for the remainder of the current trip.

For additional information, see "Rear Door Alert" (P.167).

WARNING

Selecting "Dismiss Message" during a stop within a trip temporarily dismisses the message for that stop without turning the system off. Alerts can be provided for other stops during the trip. Selecting "Disable Alert" turns off the Rear Door Alert system for the remainder of a trip and no audible alert will be provided.

Check Rear Seat indicator

Check Rear Seat

When the system is enabled, this message appears when the ignition switch is placed in the OFF position. This message alerts the driver to check for occupants or items in the rear seat after the audible alert (if so equipped) has been provided.

Lane Departure Warning (LDW)/Intelligent Lane Intervention (I-LI) indicator



This indicator appears when the Lane Departure Warning (LDW) and/or Intelligent Lane Intervention (I-LI) systems are engaged.

(See "Lane Departure Warning (LDW)/Intelligent Lane Intervention (I-LI)" (P.319).)

Blind Spot Warning (BSW)/Intelligent Blind Spot Intervention (I-BSI) indicator



This indicator appears when the Blind Spot Warning (BSW) and/or Intelligent Blind Spot Intervention (I-BSI) systems are engaged.

(See "Blind Spot Warning (BSW)" (P.325) or "Intelligent Blind Spot Intervention (I-BSI)" (P.333).)

Vehicle ahead detection indicator



This indicator shows the status of the following systems:

- Automatic Emergency Braking (AEB) with Pedestrian Detection
- Intelligent Forward Collision Warning (I-FCW)

(See "Automatic Emergency Braking (AEB) with Pedestrian Detection system" (P.381) or "Intelligent Forward Collision Warning (I-FCW)" (P.392).)

Cruise indicator



This indicator shows the conventional (fixed speed) cruise control mode status. The status is shown by the color.

(See "Conventional (fixed speed) cruise control" (P.366).)

Speed control status/set distance/lane marker indicator



This indicator shows the status of the Intelligent Cruise Control (ICC) system and the

detection of the lane markers. The status is shown by the color and shape. (See "ProPILOT Assist Systems" (P.349).)

Malfunction See Owner's Manual warning

Malfunction
See Owner's Manual

This warning appears when the following systems malfunction.

- Traffic Sign Recognition (TSR)
- Rear Automatic Braking (RAB)
- Rear Cross Traffic Alert (RCTA)
- Automatic Emergency Braking (AEB) with Pedestrian Detection
- Intelligent Forward Collision Warning (I-FCW)
- Lane Departure Warning (LDW)
- Intelligent Lane Intervention (I-LI)
- Blind Spot Warning (BSW)
- Intelligent Blind Spot Intervention (I-BSI)
- ProPILOT Assist
- Intelligent Driver Alertness (I-DA)

(See "Traffic Sign Recognition (TSR)" (P.316), "Rear Automatic Braking (RAB)" (P.400), "Rear Cross Traffic Alert (RCTA)" (P.343), "Automatic Emergency Braking (AEB) with Pedestrian Detection system" (P.381), "Intelligent Forward Collision Warning (I-FCW)" (P.392), "Lane Departure Warning (LDW)/Intelligent Lane Intervention (I-LI)" (P.319), "Blind Spot Warning (BSW)" (P.325), "Intelligent Blind Spot Intervention (I-BSI)" (P.333), "ProPILOT Assist Systems" (P.349) or "Intelligent Driver Alertness (I-DA)" (P.398).)

Unavailable Camera Temperature High warning

Unavailable
Camera Temperature High

This warning appears if the interior temperature of the vehicle has reached such a high temperature that the sensor for the following systems can no longer function reliably.

- Lane Departure Warning (LDW)
- Intelligent Lane Intervention (I-LI)
- Intelligent Blind Spot Intervention (I-BSI)
- Traffic Sign Recognition (TSR)
- Steering Assist

Once the interior temperature has reached normal levels, the warning should disappear.

If the warning continues to display, have the system checked. It is recommended that you visit a NISSAN dealer for this service.

For additional information, refer to "Lane Departure Warning (LDW)/Intelligent Lane Intervention (I-LI)" (P.319), "Intelligent Blind Spot Intervention (I-BSI)" (P.333), "Traffic Sign Recognition (TSR)" (P.316) or "ProPILOT Assist Systems" (P.349).

Currently Unavailable warning

Currently Unavailable
due to Drive Mode or
High Suspension Setting

This warning appears when the Intelligent Lane Intervention (I-LI), Intelligent Blind Spot Intervention (I-BSI) or the Intelligent Cruise Control (ICC) system becomes unavailable in certain conditions. (See "Lane Departure Warning (LDW)/Intelligent Lane Intervention (I-LI)" (P.319), "Intelligent Blind Spot Intervention (I-BSI)" (P.333) or "Intelligent Cruise Control (ICC)" (P.362).)

Driving Aids Temporarily limited Radar interference warning

Driving Aids
Temporarily limited
Radar interference

When the radar sensor picks up interference from another radar source, this warning message will appear in the vehicle information display and the AEB system OFF warning light will illuminate.

When the above condition no longer exists, the AEB with Pedestrian Detection system and the I-FCW system will resume automatically.

(See "Automatic Emergency Braking (AEB) with Pedestrian Detection system" (P.381) and "Intelligent Forward Collision Warning (I-FCW)" (P.392).)

Forward Driving Aids temporarily disabled Front Sensor blocked See Owner's Manual warning

Forward Driving Aids temporarily disabled
Front Sensor blocked
See Owner's Manual

If the front radar sensor area on the front of the vehicle is covered with dirt or obstructed, making it impossible to detect a vehicle ahead, the following system is automatically turned off.

- Intelligent Cruise Control (ICC) (on ProPILOT Assist system)

If the warning message appears, park the vehicle in a safe location and turn the engine off.

Check to see if the sensor area is blocked. If the sensor area is blocked, remove the blocking material. Restart the engine. If the warning message continues to appear, have the system checked. It is recommended that you visit a NISSAN dealer for this service.

For more details, see "ProPILOT Assist Systems" (P.349).

Driving Aids Temporarily disabled Clean sensor area See Owner's Manual warning

Driving Aids
Temporarily disabled
Clean sensor area
See Owner's Manual

If the front radar sensor area on the front of the vehicle or the front camera area is covered with ice, dirt or obstructed, making it impossible to detect a vehicle ahead, the following system is automatically turned off.

- Automatic Emergency Braking (AEB) with Pedestrian Detection
- Intelligent Forward Collision Warning (I-FCW)

If the warning message appears, park the vehicle in a safe location and turn the engine off.

Check to see if the sensor area is blocked. If the sensor area is blocked, remove the blocking material. Restart the engine. If the warning message continues to appear, have the system checked. It is recommended that you visit a NISSAN dealer for this service.

For more details, see "Automatic Emergency Braking (AEB) with Pedestrian Detection system" (P.381) or "Intelligent Forward Collision Warning (I-FCW)" (P.392).

Driving Aids temporarily limited warning

Driving Aids
temporarily limited

This warning appears under the following conditions when Automatic Emergency Braking (AEB) with Pedestrian Detection system is activated.

For the Automatic Emergency Braking (AEB) with Pedestrian Detection system:

- When the system check for the warning function did not end normally
- When the vehicle is towed

(See "Automatic Emergency Braking (AEB) with Pedestrian Detection system" (P.381).)

Driving Aids temporarily limited Front Camera Too Hot warning

Driving Aids temporarily limited
Front Camera Too Hot

This warning appears if the interior temperature of the vehicle has reached such a high temperature that the sensor for the following systems can no longer function reliably.

- Automatic Emergency Braking (AEB) with Pedestrian Detection system

Once the interior temperature has reached normal levels, the warning should disappear.

If the warning continues to display, have the system checked. It is recommended that you visit a NISSAN dealer for this service.

(See "Automatic Emergency Braking (AEB) with Pedestrian Detection system" (P.381).)

Driving Aids Temporarily limited Poor Visibility warning

Driving Aids Temporarily limited
Poor Visibility

This warning appears when the Automatic Emergency Braking (AEB) with Pedestrian Detection system or Steering Assist system

is activated and strong light, such as sunlight or high beams from oncoming vehicles, enter the front camera.
(See "Automatic Emergency Braking (AEB) with Pedestrian Detection system" (P.381) or "ProPILOT Assist Systems" (P.349).)

Rear Driving Aids Unavailable indicator

Rear Driving Aids Unavailable Towing Assist Activated

This message will appear when the TOW mode (if so equipped) is selected or the trailer BSW function is activated, and the Rear Automatic Braking (RAB) system, Rear Cross Traffic Alert (RCTA) and the rear sonar system will be temporarily unavailable.
(See "Rear Automatic Braking (RAB)" (P.400), "Front and rear sonar system" (P.427), "Drive Mode Selector (if so equipped)" (P.312), "Blind Spot Warning (BSW)" (P.325) or "Rear Cross Traffic Alert (RCTA)" (P.343).)

Unavailable Side Radar Obstruction warning

Unavailable Side Radar Obstruction

This warning appears when the following systems become unavailable because a radar blockage is detected.

- Blind Spot Warning (BSW)
- Intelligent Blind Spot Intervention (I-BSI)
- Rear Cross Traffic Alert (RCTA)

(See "Blind Spot Warning (BSW)" (P.325), "Intelligent Blind Spot Intervention (I-BSI)" (P.333) or "Rear Cross Traffic Alert (RCTA)" (P.343).)

I-LI ON indicator/I-BSI ON indicator/ProPILOT Assist status indicator



This indicator appears when the following systems are turned on:

- Intelligent Lane Intervention (I-LI)
- Intelligent Blind Spot Intervention (I-BSI)
- ProPILOT Assist

See "Lane Departure Warning (LDW)/Intelligent Lane Intervention (I-LI)" (P.319), "Intelligent Blind Spot Intervention (I-BSI)" (P.333) or "ProPILOT Assist Systems" (P.349).

Look Forward warning (if so equipped)

⚠ Warning



Look Forward

This warning may appear if the system does not detect driver's attention on the road ahead.
Always look forward, drive carefully and pay attention to traffic conditions ahead.
When the driver looks forward, the warning turns off.
For additional information, refer to "Driver Monitor (ProPILOT Assist 2.1)" (P.375).

Steering Assist guidance



Steering Assist ON



OFF

Steering Assist OFF

This message appears when the Steering Assist system is turned on or off.
See "ProPILOT Assist Systems" (P.349).

Steering Assist indicator



This indicator appears when the Steering Assist system is engaged.
See "ProPILOT Assist Systems" (P.349).

Hands on/Eyes off detection warning (if so equipped)



This warning may appear when the Steering Assist system is engaged and the following condition(s) occur:

- When not holding the steering wheel
- When there is no steering wheel operation

Hold on the steering wheel immediately. When the steering operation is detected, the warning turns off and the Steering Assist function is automatically restored. For additional information, refer to "ProPILOT Assist Systems" (P.349).

Step on Brake Now indicator

Step on Brake Now

This message may appear when the Intelligent Cruise Control (ICC) system is engaged and the following condition occurs:

- While the vehicle is stopped by the ICC system, the driver's door is opened but the electronic parking brake was not activated.

Step on the brake pedal immediately.

Unavailable Slippery Road warning

Unavailable
Slippery Road

This warning appears when the following systems become unavailable because the road is slippery.

- Intelligent Lane Intervention (I-LI)
- Intelligent Blind Spot Intervention (I-BSI)
- Intelligent Cruise Control (ICC)

(See "Lane Departure Warning (LDW)/Intelligent Lane Intervention (I-LI)" (P.319), "Intelligent Blind Spot Intervention (I-BSI)" (P.333) or "Intelligent Cruise Control (ICC)" (P.362).)

Unavailable Seatbelt is Unfastened indicator

Unavailable
Seatbelt is Unfastened

This message may appear when the Intelligent Cruise Control (ICC) system is engaged.

Under the following condition, the ICC system is automatically canceled:

- When the driver's seat belt is not fastened.

The ICC system cannot be used when the driver's seat belt is not fastened.

Unavailable Adverse Weather indicator

Unavailable
Adverse Weather

This message may appear when the Steering Assist system is engaged.

Under the following conditions, the Steering Assist system is automatically canceled:

- When the wiper (HI) operates.
- When lane markers in the traveling lane cannot be correctly detected for a period of time due to such items as a snow rut, reflection of light on a rainy day or several unclear lane markers are present.

If you want to use the Steering Assist system again, cancel the ProPILOT Assist system and set it again when lane markers are clearly visible.

Unavailable Low Visibility indicator

Unavailable
Low Visibility

This message may appear when the Steering Assist system is engaged.

Under the following conditions, the Steering Assist system is automatically canceled:

- The camera area of the windshield is fogged up or covered with dirt, water, drops, ice, snow, etc.
- Strong light, such as sunlight or high beams from oncoming vehicles, enter the front camera (for models equipped with ProPILOT Assist 2.1)

Steering Assist Not Available Cannot Detect Lane indicator

Steering Assist Not Available Cannot Detect Lane

This indicator may appear when the Steering Assist system is engaged. The Steering Assist system is automatically canceled when the lane markers in the traveling lane cannot be correctly detected for a period of time due to such items as a snow rut, reflection of light on a rainy day or several unclear lane markers are present.

If you want to use the Steering Assist system again, cancel the ProPILOT system and set it again when lane markers are clearly visible.

Trailer or Rear Object May Limit Steering Assist indicator (if so equipped)

Trailer or Rear Object May Limit Steering Assist

This indicator may appear when the Steering Assist system is engaged. The Steering Assist with HD map data feature is not available or may cancel if the system determined that it cannot correctly detect the vehicle behind in an adjacent lane.

Unavailable Parking Brake is ON indicator

Unavailable Parking Brake is ON

This message may appear when the Intelligent Cruise Control (ICC) system is engaged. Under the following condition, the ICC system is automatically canceled:

- The electronic parking brake is applied.

The above system cannot be used when the electronic parking brake is activated.

Only Available with ProPILOT Assist ON indicator

Only Available with ProPILOT Assist ON

This indicator appears when the Steering Assist switch is pushed while the ProPILOT Assist system is not turned on. (See "ProPILOT Assist Systems" (P.349).)

Automatic Emergency Braking (AEB) emergency warning indicator



This warning indicator appears along with an audible warning, when the Automatic Emergency Braking (AEB) with Pedestrian Detection system detects the possibility of a forward collision.

See "Automatic Emergency Braking (AEB) with Pedestrian Detection system" (P.381).

Rear Automatic Braking (RAB) system warning indicator



This warning indicator appears to indicate the status of the Rear Automatic Braking (RAB) system.

See "Rear Automatic Braking (RAB)" (P.400).

Sonar system indicator



This indicator appears to indicate the status of the sonar system.

See "Front and rear sonar system" (P.427).

Parking Sensor Temporarily disabled warning

Parking Sensor Temporarily disabled

This warning appears when the sonar system is temporarily disabled caused by sonar sensor blockage is detected. (See "Front and rear sonar system" (P.427).)

Parking Sensor Error See Owner's Manual warning

Parking Sensor Error
See Owner's Manual

This warning appears when there is a malfunction with the sonar system. (See "Front and rear sonar system" (P.427).)

Press Brake Pedal warning

Press Brake Pedal

This warning appears in the following situations:

- The driver tries to release the electronic parking brake manually without depressing the brake pedal.
- The vehicle is stopped on a steep hill and there is a possibility of moving backward, even if the electronic parking brake is applied.

Press brake pedal to prevent rolling warning



Press brake pedal to prevent rolling

This warning appears and a chime sounds if the vehicle moves while the automatic brake hold function is activated. Apply the foot brake to stop the vehicle moving.

Press brake to operate switch indicator



AUTO HOLD
Press brake to operate switch

This indicator appears if the automatic brake hold switch is pushed without depressing the brake pedal while the automatic brake hold function is activated. Depress the brake pedal and push the switch to deactivate the automatic brake hold function. (See "Automatic brake hold" (P.309).)

Caution Steep slope indicator



AUTO HOLD
Caution
Steep slope

This indicator appears and a chime sounds when the automatic brake hold function is activated while the vehicle is on a steep hill. Apply the foot brake to stop the vehicle moving. (See "Automatic brake hold" (P.309).)

Steep Slope Apply foot brake indicator



AUTO HOLD
Steep Slope
Apply foot brake

This indicator appears and a chime sounds if "Caution Steep slope" has appeared over about 3 minutes. Then, the parking brake will automatically be applied and the braking force of the automatic brake hold function will be released, and vehicle may move or roll away unexpectedly. Apply the foot brake to stop the vehicle moving. (See "Automatic brake hold" (P.309).)

Auto Hold Not Available in 4LO indicator (if so equipped)

Auto Hold
Not Available in 4LO

Automatic brake hold function will not be activated when the vehicle is in the 4L position. If the 4WD shift switch is shifted to the 4L position when the automatic brake hold function is activated, the braking force of the automatic brake hold function will be released. (See "Automatic brake hold" (P.309).)

Take a Break? indicator



Take a Break?

This indicator appears when the Intelligent Driver Alertness (I-DA) system detect that the driver attention is decreasing. (See "Intelligent Driver Alertness (I-DA)" (P.398).)

Low Oil Level warning



Low Oil Level

This warning appears when the engine oil level is low. Warm up the engine on a level surface. After at least 10 minutes have passed since the engine was stopped, use the engine oil dipstick to check the oil level. (See "Engine oil" (P.471).) If the oil level is low, add the engine oil.

If the warning appears again before reaching the oil change interval shown in the "9. Maintenance and schedules" section, check the oil level. When the warning appears and the oil level is low, have the vehicle checked. It is recommended that you visit a NISSAN dealer for this service.

NOTE:
If the vehicle is not on a level surface, accurate measurement of the oil level may not be possible. If "Low Oil Level" warning message appears, but the level shown by the oil dipstick is normal, move the vehicle to a level surface and stop the engine. After at least 10 minutes have passed, open the driver's door and place the ignition switch in the ON position. If the "Low Oil Level" warning message appears again, add the engine oil or change the engine oil, according to the instructions described above.

Sensor Fault See Owner's Manual warning



Sensor Fault
See Owner's Manual

This warning appears when the engine oil level sensor may be malfunctioning. It is recommended you contact a NISSAN dealer immediately.

Engine Oil Service due in – – – miles



Service due in – – – miles

This distance to oil change is displayed if the distance to oil change is less than 62 miles (100 km).

Engine oil level display



Oil Level OK

To display the engine oil level, see "Maintenance" (P.118).

"Oil Level OK": The engine oil level is correct.

"Low Oil Level": The engine oil level is too low. Please add the appropriate amount of engine oil and then check the engine oil level again. See "Engine oil" (P.471).

"High Oil Level": The engine oil level is too high. Please reduce the appropriate amount of engine oil and then check the engine oil level again. See "Engine oil" (P.471). It is recommended you visit a NISSAN dealer for this service.

Air suspension mode indicator (if so equipped)



The vehicle height indicators will appear in accordance with the status of the air suspension system. See "Air suspension system (if so equipped)" (P.413) for more information.

Air suspension warning (if so equipped)

Suspension malfunction
Please steer carefully
Visit dealer

This warning appears when the air suspension system is malfunctioning. (See "Air suspension system (if so equipped)" (P.413).)

Idling Stop System indicator



This indicator shows the Idling Stop System status. (See "Idling Stop System" (P.432).)

Limited driver's aid VDC setting OFF warning

Limited driver's aid
VDC setting OFF

This warning appears when the Vehicle Dynamic Control (VDC) system is OFF. The Automatic Emergency Braking (AEB) with Pedestrian Detection will not operate. In this case only visible and audible warning operates.

Driving Aids Limited Towing Assist Activated indicator

Driving Aids Limited
Towing Assist Activated

This warning appears when the trailer BSW function (see "Trailer BSW function operation" (P.330)) is enabled or the TOW mode has been selected (if so equipped) (see "Drive Mode Selector (if so equipped)" (P.312)). The Intelligent Lane Intervention (I-LI) system, the Intelligent Blind Spot Intervention (I-BSI) system and the Steering Assist function (ProPILOT Assist) are automatically disabled.

Neutral Hold Mode guidance indicator

To Exit Vehicle in Neutral;
Engine ON, Brake ON
Push P, shift into N twice

This indicator appears when the ignition switch is placed in the OFF position while the shift position is in the N (Neutral) position (Neutral hold mode is available). (See "Neutral hold mode function" (P.304).)

Neutral Hold Mode activated indicator

Neutral Hold Mode has been activated.
To exit this mode, please shift to a different gear.

This indicator appears when the Neutral hold mode is activated. To exit the Neutral hold mode, place the vehicle in other than N (Neutral) position. (See "Neutral hold mode function" (P.304).)

Neutral Hold Mode was not activated indicator

Neutral Hold Mode was not activated.

This indicator appears when the Neutral hold mode is unavailable. To activate the Neutral hold mode, wait for a while without shifting and then perform the operations again. (See "Neutral hold mode function" (P.304).)

Secondary Collision Mitigation Braking malfunction warning

Secondary Collision
Mitigation Braking
malfunction
Visit Dealer

This warning appears when there is a malfunction with the braking system to mitigate the secondary collision (Secondary Collision Mitigation Braking (SCMB)). Have the system checked as soon as possible. It is recommended that you contact a NISSAN dealer for this service.

See "Secondary Collision Mitigation Braking (SCMB)" (P.421) for more details.

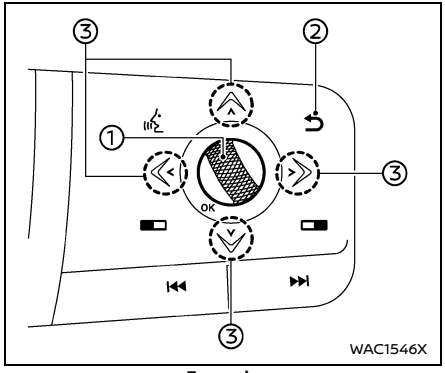

Example

TRIP COMPUTER

Basic information

Switches for the trip computer are located on the steering wheel.

① Scroll dial - navigate through the items and change or select an item in vehicle information display
this scroll dial allows up/down navigation and push to select

② ↩ - go back to the previous menu

③ Up/down/left/right arrows - change from one display screen to the next (i.e. trip, Fuel economy)

The displayed images may differ depending on the model.

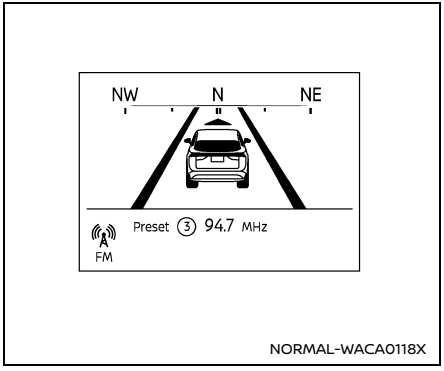

Home

The Home mode shows the following information.

- Navigation (if so equipped)
- Audio

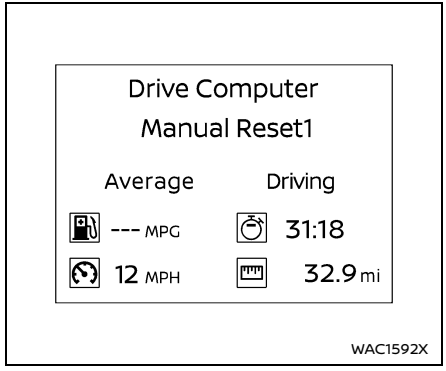

Drive Computer

Average fuel consumption:

The average fuel consumption shows the average fuel consumption since the last reset.

Average speed:

The average speed shows the average vehicle speed since the last reset.

Trip odometer:

The trip odometer shows the total distance the vehicle has been driven since the last reset.

Elapsed time:

The elapsed time shows the time since the last reset.

The Drive Computer mode has three modes of operation. You can switch between Manual Reset1, Manual Reset2 or Auto Refuel by pushing the scroll dial.

Manual Reset1 and Manual Reset2 can be reset manually by using the scroll dial.

Auto Refuel will be reset automatically each time when refueling.

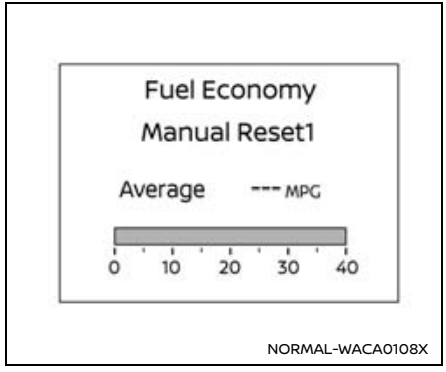

Fuel Economy display

Current fuel consumption:

The Fuel economy display mode shows the current fuel consumption.

Average fuel consumption:

The Fuel economy display mode shows the average fuel consumption since the last reset.

The Fuel economy display mode has three modes of operation. You can switch between Manual Reset1, Manual Reset2 or Auto Refuel by pushing the scroll dial.

Manual Reset1 and Manual Reset2 can be reset manually by using the scroll dial.

Auto Refuel will be reset automatically each time when refueling.

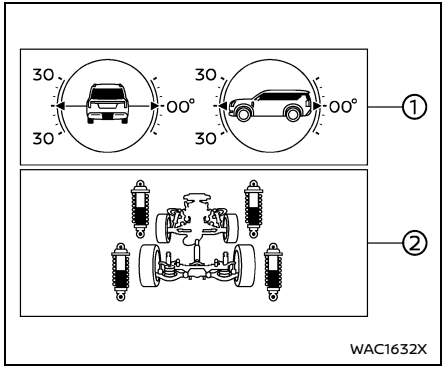

Example

Off Road (if so equipped)

The Off Road and 4WD monitor displays the various conditions of the vehicle.

The Pitch and Roll Gauge ① indicates the angle of the vehicle position left, right, up or down. The value will be displayed while the vehicle graphic will rotate to indicate vehicle condition: left, right, up or down.

The Tire Angle & 4WD Gauge ② indicates the angle of the tires based on turning of the steering wheel and 4WD status. The graphic image will show the actual vehicle tire position while the angle is to be displayed above as reference. The 4WD status is displayed below.

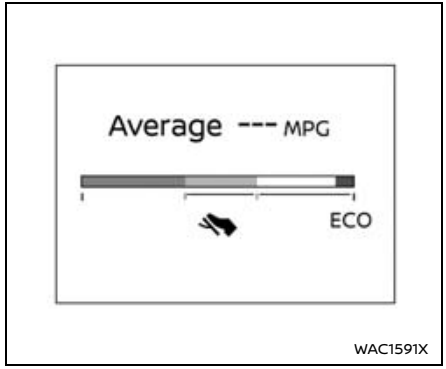

ECO Pedal Guide (if so equipped)

When the ECO mode is selected, you can view the ECO Pedal Guide function for improving fuel economy.

(See "ECO Pedal Guide function (if so equipped)" (P.314).)

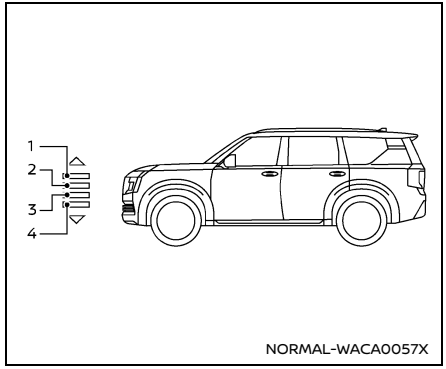

Height Control display (if so equipped)

The Height Control display shows the current vehicle height in 4 stages.

Depending on the vehicle height, one of the symbols in front of the vehicle graphic will illuminate.

1. The vehicle height is HIGH level
2. The vehicle height is NORMAL level
3. The vehicle height is AERO level
4. The vehicle height is ACCESS level

See "Air suspension system (if so equipped)" (P.413) for detailed information.

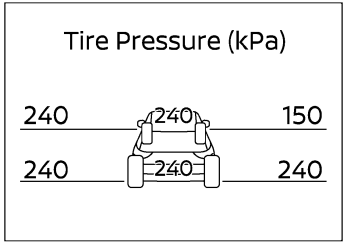

WAC1585X

Tire Pressures

The tire pressure mode shows the pressure of all four tires while the vehicle is driven.

With the “Tire Pres ECO advice” function ON, when the tire pressure is getting low, “Check Tire Pressures for Best Fuel Economy” appears. (See "ECO Mode Setting" (P.115) and "Tire Pres ECO advice" (P.313).)

When the Tire Pressure Low — Add Air warning appears, the display can be switched to the tire pressure mode by pushing the scroll dial to reveal additional details on the displayed warning.

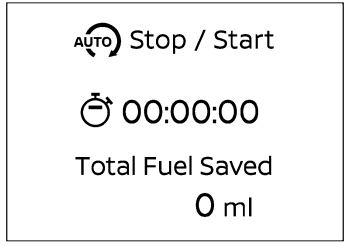

WAC1331X

Idling Stop System

The Idling Stop System mode shows the information about the amount of fuel saved while using the system. (See "Idling Stop System" (P.432).)

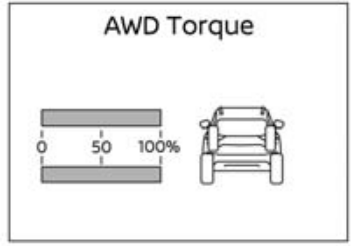

NORMAL-WACA0109X

4WD Torque Split display (if so equipped)

When the NISSAN All-Mode 4WD® torque distribution display is selected, you can view the distribution ratio of the transmission torque to the front and rear wheels during driving.

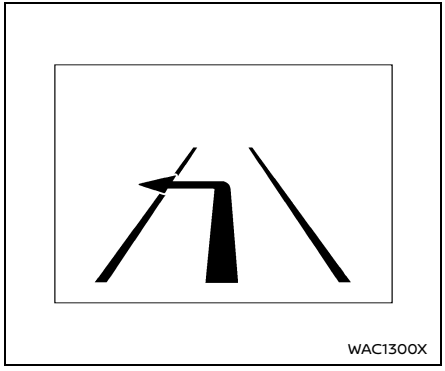

Navigation

When the route guidance is set in the navigation system, this item shows the navigation route information.

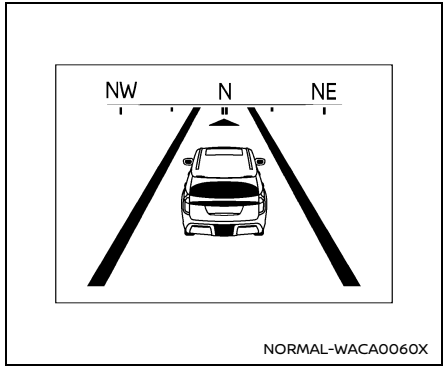

Compass (if so equipped)

This display indicates the heading direction of the vehicle.

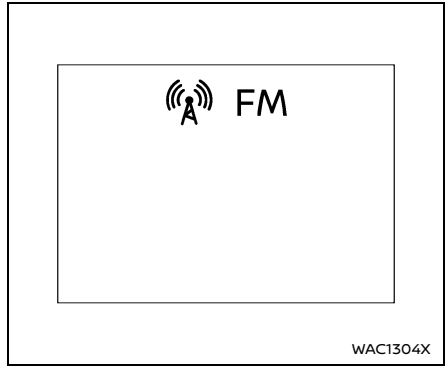

Audio

The audio mode shows the status of audio information.

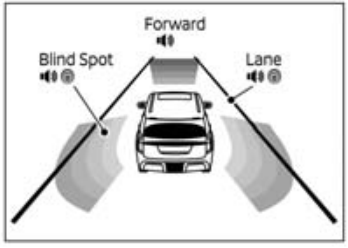

NORMAL-WACA0061X

Driver Assistance

The Driver Assistance mode shows the operating condition for the following systems.

- Forward:
  - Automatic Emergency Braking (AEB) with Pedestrian Detection system
  - Intelligent Forward Collision Warning (I-FCW)
- Lane:
  - Lane Departure Warning (LDW)
  - Intelligent Lane Intervention (I-LI)
- Blind Spot:
  - Blind Spot Warning (BSW)
  - Intelligent Blind Spot Intervention (I-BSI)

For more details, see "Automatic Emergency Braking (AEB) with Pedestrian Detection system" (P.381), "Intelligent Forward Collision Warning (I-FCW)" (P.392), "Lane Departure Warning (LDW)/Intelligent Lane Intervention (I-LI)" (P.319), "Blind Spot Warning (BSW)" (P.325) or "Intelligent Blind Spot Intervention (I-BSI)" (P.333).

- When any of the "Warning" systems are enabled, the " " mark is shown in each zone.
- When any of the "Intervention" systems are enabled, the " " mark is shown in each zone.
- When no system is enabled, "OFF" is shown in each zone.
- When the " " mark (yellow) or " " mark (yellow) flashes or illuminates in each zone, the system cannot be used.

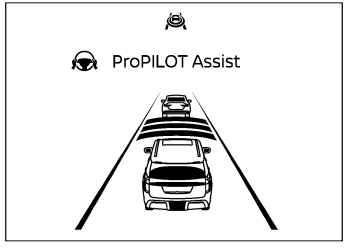

NORMAL-WACA0062X

Example

ProPILOT Assist

The ProPILOT Assist mode shows the operating conditions for the following systems:

- Intelligent Cruise Control (ICC)
- Steering Assist

The display will also be shown when the ProPILOT Assist is turned on. For additional information, see "ProPILOT Assist Systems" (P.349).

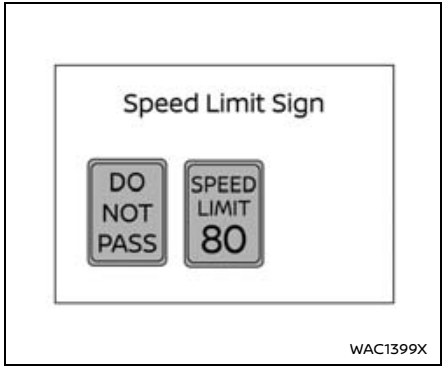

Traffic Sign Recognition

The Traffic Sign Recognition (TSR) system provides the driver with information about the most recently detected speed limit. See "Traffic Sign Recognition (TSR)" (P.316) for more details.

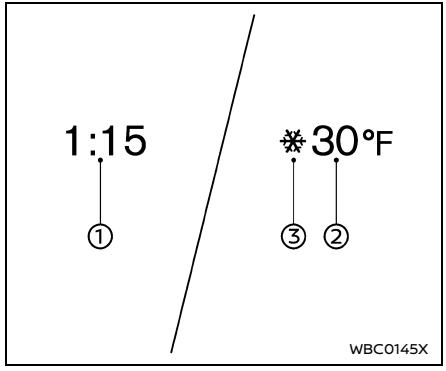

CLOCK AND OUTSIDE AIR TEMPERATURE

The clock ① and outside air temperature ② are displayed on the upper side of the vehicle information display.

Clock

For clock adjustment, see "Clock" (P.115) or the separate NissanConnect® Owner's Manual.

Outside air temperature (˚F or ˚C)

The outside air temperature is displayed in ˚F or ˚C in the range of −40 to 140˚F (−40 to 60˚C).

The outside air temperature mode includes a low temperature warning feature. If the outside air temperature is below 27˚F (−3˚C), the indicator ③ is displayed.

The outside temperature sensor is located in front of the radiator. The sensor may be affected by road or engine heat, wind directions and other driving conditions. The display may differ from the actual outside temperature or the temperature displayed on various signs, billboards or media information.

NOTE:

The clock is not displayed when it is disabled in the settings menu. In addition, the clock will not be displayed temporarily while the seat belt waning is displayed. (See "Front and rear seat belt warning (if so equipped)" (P.122) or "Rear seat belt warning (if so equipped)" (P.122) for the seat belt warning display.)

TOUCH SCREEN DISPLAY

BASIC INFORMATION

Some of the vehicle equipment/features can be operated using the touch screen display. See the NissanConnect® Owner's Manual for the basic usage of the touch screen display.

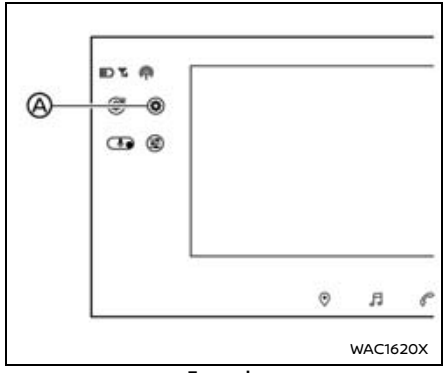

Example

Touch ⚙ Ⓐ on the touch screen display to display "All Settings" menu.

Touch to select your desired item.

Available setting items vary depending on models, specifications, software versions and conditions.

See the following items for the vehicle-related equipment/features. For items other than those listed below, please refer to the separate NissanConnect® Owner's Manual.

VEHICLE

Camera

The following items for the camera can be adjusted or turned on or off. See "RearView Monitor (if so equipped)" (P.239) or "Intelligent Around View® Monitor (if so equipped)" (P.245) for more details.

- Predictive Course Lines
  Allows user to turn the predictive course lines ON/OFF.
- Display Settings
  The following items can be adjusted.
  - Brightness
  - Contrast
  - Tint
  - Color
  - Black Level
- Saved Locations
  Allows user to change or delete the registered locations.
- Ultra Wide Camera
  Allows user to turn this function ON/OFF. If this item is ON, the icon that enables Ultra Wide View is displayed.
- My Parking Locations
  Allows user to register or delete the guide lines for your parking. See "My Parking Locations (if so equipped)" (P.256) for details.
- Automatic 360° Moving
  Allows user to turn this function ON/OFF. If this item is ON, the 3D view of the vehicle will turn 360° when the Camera ☀/☽ button is pushed first time after the ignition switch ON.
- Vehicle Color
  Allows user to change the vehicle color viewed in the Intelligent Around View® Monitor.

Dash Cam

The following items for the driving recorder can be adjusted or turned on or off. See "Driving recorder (if so equipped)" (P.274) for more details.

Please note that all recording functions are turned off at the first start. When you turn on the "Auto Record Video" at the first time, "Parking Monitoring" and "Recording At Impact" will also be turned on at the same time. After the first activation, each items can be turned ON/OFF independently.

- Auto Record Video
  Allows user to turn the general recording function ON/OFF.
- Record Sound
  Allows user to turn the sound recording function ON/OFF (except for Record Event).
- Parking Monitoring
  Allows user to turn the parking monitoring function ON/OFF.
  If this function is ON, the vehicle will automatically start recording when the vehicle senses an impact during parking.
- Recording At Impact
  Allows user to turn this function ON/OFF.
  If this function is ON, the vehicle will automatically start recording when the vehicle senses an impact during driving or stopping.
- Recording Time
  Allows user to select the recording time per 1 general recording video from below.
  - 1 min
  - 3 min
  - 5 min
- Video Bitrate
  Allows user to select video bitrate from below.
  - High
  - Standard
  - Low
- Video Overlay Information
  Allows user to turn this function ON/OFF.
  If this function is ON, the vehicle information is overlaid on the videos.
- Impact Sensitivity
  Allows user to select the impact threshold at which automatic recording starts.
  - High
  - Middle
  - Low
- Wi-Fi File Transfer
  Allows user to turn this function ON/OFF.
  If this function is ON, a smartphone can be connected to the driving recorder via Wi-Fi using a dedicated smartphone app. Files stored on the driving recorder can be checked and downloaded using the smartphone.
- Self-timer
  Allows user to select the self timer status for the In Car Camera from below.
  - 0 sec
  - 3 sec
  - 10 sec
- Adjust Camera Angle
  Allows user to adjust the front/rear camera angle.
- Dash Cam System
  Allows user to set/select the items below.
  - Software Version
  - Format SD card
  - Reset All Dash Cam Settings to Default
- Front Camera
  The following items can be adjusted.
  - Brightness
  - Contrast
- Rear Camera
  The following items can be adjusted.
  - Brightness
  - Contrast
- Inside Camera
  The following items can be adjusted.
  - Brightness
  - Contrast

Climate

The following items for the air conditioner can be adjusted or turned on or off. See "Heater and air conditioner" (P.265) for more details about the air conditioner.

- Airflow Intensity
  Allows user to select your preferred airflow intensity from below.
  OFF, 1, 2 or 3

- Defrost Activates Front & Rear
  Allows user to turn the function ON/OFF.
  If this function is ON, the rear defroster will automatically activate when the front defroster is turned ON.
- Auto Defogging Sensitivity
  Allows user to select your preferred sensitivity from below.
  OFF, 1, 2 or 3
- Biometric Cooling (BIO COOL)
  Allows user to turn the Biometric Cooling function ON/OFF.
  See "Biometric cooling (if so equipped)" (P.272) for details.
- Heated Steering Wheel Sensitivity
  Allows user to select your preferred sensitivity from below.
  OFF, 1, 2 or 3
- Driver Auto Seat Sensitivity
  Allows user to select your preferred sensitivity from below.
  OFF, 1, 2 or 3
- Passenger Auto Seat Sensitivity
  Allows user to select your preferred sensitivity from below.
  OFF, 1, 2 or 3
- 2nd Row Left Auto Seat Sensitivity
  Allows user to select your preferred air conditioning intensity from below.
  OFF, 1, 2 or 3
- 2nd Row Right Auto Seat Sensitivity
  Allows user to select your preferred air conditioning intensity from below.
  OFF, 1, 2 or 3

Seat

The following items for the seat can be adjusted or turned on or off. See "Seats" (P.17) or "Seat adjustment using touch screen display (if so equipped)" (P.29) for more details.

- Massage Settings
  Allows user to set/select the items below.
  - ON/OFF
  - Relaxing, Refreshing or Lumbar
  - Intensity
  - Speed
- Driver's Seat Pop-up
  Allows user to turn the display pop up function for the driver's seat ON/OFF.
- Passenger's Seat Pop-up
  Allows user to turn the display pop up function for the front passenger's seat ON/OFF.
- Front Power Seat Adjustment
  Allows user to adjust various positions of the driver's and front passenger's seat.
  See "Front seats" (P.18) for each adjustment.
- Power Folding Rear Seats
  Allows user to folding/returning 3rd row seats to maximize the cargo capacity.
  See "Power folding (if so equipped)" (P.27) for more details.

Interior Light

The following items for the interior light can be adjusted or turned on or off. See "Interior lights" (P.186).

Following items are available.

- Accent Lighting
  Allows user to adjust the brightness.
- Ambient Lighting
  Allows user to turn the light ON/OFF, adjust the brightness and set the items below.
  (Locations)
  - Front
  - Rear

  (Colors)
  - ProPILOT Assist Mode
  - Delight (4 colors)
  - Discovery (4 colors)
  - Passion (4 colors)
  - Harmony (4 colors)
  - Additional (48 colors)

HEAD UP DISPLAY (HUD) (if so equipped)

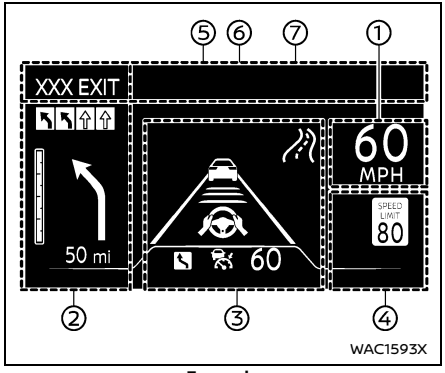

Example

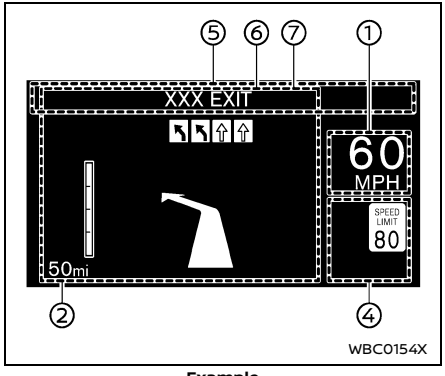

Example

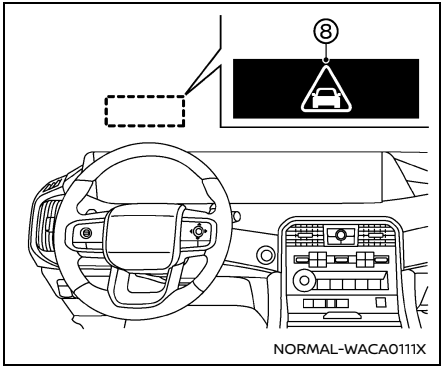

The Head Up Display (HUD) can display one or more of the following features (if so equipped):

① Vehicle speed
② Navigation
③ Driving Assist
④ Traffic Sign
⑤ Audio
⑥ TEL/SMS
⑦ Message for Driver Assistance
⑧ Warning message

BASIC INFORMATION

⚠ WARNING

- **Failure to properly adjust the brightness and position of the displayed image may interfere with the driver's ability to see through the windshield, which could cause an accident leading to severe injury or death.**
- **Do not use the Head Up Display (HUD) for extended periods of time as that can cause you to not see other vehicles, pedestrians or objects, which could cause an accident leading to severe injury or death.**

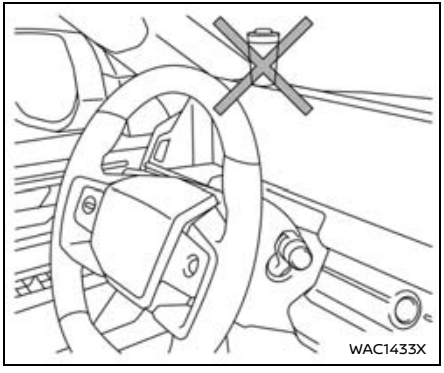
WAC1433X

CAUTION

- **Do not place any type of liquid on or near the projector. Doing so may cause malfunction of the equipment.**
- **Do not touch any internal parts of the projector. Doing so may cause malfunction of the equipment.**
- **To prevent scratches to the projector glass, do not place any sharp objects on or near the projector opening.**
- **Do not place any objects on the instrument panel which may obstruct the display of the HUD.**
- **For cleaning, use a soft cloth, dampened with water. Never use a rough cloth, alcohol, benzine, thinner or any kind of solvent or paper towel with a chemical cleaning agent. They will scratch or cause discoloration to the projector lens.**
- **Do not spray any liquid such as water on the projector lens. Spraying liquid may cause the system to malfunction.**

NOTE:

- **If you wear polarized sunglasses, the display may be difficult to see. Increase the brightness of the HUD in the vehicle information display or remove your sunglasses.**
- **Depending on weather conditions (rain, snow, sunlight, etc.), the display may be difficult to see.**
- **If the displayed image appears distorted, it is recommended you have the system checked by a NISSAN dealer.**
- **The HUD has a special windshield to allow the image to be displayed clearly. If your windshield needs replacing, this should be completed by a NISSAN dealer.**
- **For cleaning, use a soft clean dry cloth. If it cannot be removed, use a soft clean cloth, dampened with water. After that please use a soft clean close.**

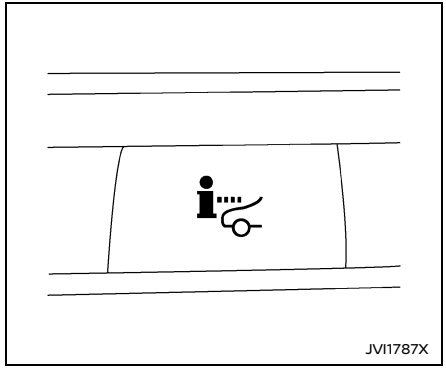
JVI1787X

HOW TO USE THE HUD

Basic information

To turn the HUD on, push the HUD switch. To turn the HUD off, push the switch again.
If the HUD is turned off, it will remain off even if the vehicle is restarted.
The following settings can be changed in the vehicle information display:

- Brightness
- Height
- Rotation
- Contents selection
  - Navigation
  - Driving Assist
  - Speed Limit Sign
  - Audio

– TEL/SMS
- Reset

NOTE:
- **Emergency information may display even if the HUD is turned off.**
- **When Driving Assist is activated, the HUD will be displayed with the ProPILOT Assist switch on even if the HUD switch is turned off.**

This product includes the following software.

(1) Panasonic Corporation or software developed for Panasonic Corporation

(2) Third-party software licensed to Panasonic Corporation

(3) Open source software

Regarding (3) Open source software, it includes open source software (OSS), including various software to which license information applies.

Refer to the license web site at: http://car.panasonic.jp/oss/j03llnna

Display brightness

The brightness of the display may be controlled in the vehicle information display. The brightness will also be adjusted automatically according to the exterior ambient lighting brightness.

Do not apply strong light to the sensor of Head Up Display. Doing so may cause a malfunction.

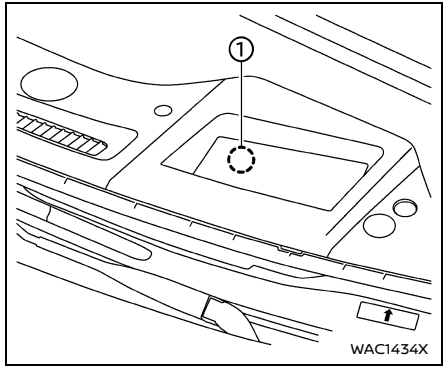

NOTE:
- **The HUD has a built-in sensor ① that controls the brightness of the displayed image. If you block the sensor with an object, the display will darken, making it difficult to see.**

DRIVER ASSISTANCE/NAVIGATION/TRAFFIC SIGN/AUDIO/TEL/SMS/MESSAGE FOR DRIVER ASSISTANCE LINKING

The HUD will display Driver Assistance and navigation information.

The Driver Assistance display will show warning situations for the following systems if the vehicle is equipped with them:
- Automatic Emergency Braking (AEB) with Pedestrian Detection
- Intelligent Forward Collision Warning (I-FCW)
- Lane Departure Warning (LDW)
- Intelligent Lane Intervention (I-LI)
- Hands-free warning
- Lane Change Assist indicator (ProPILOT Assist 2.1)

The Navigation System linking display will show the following items:
- Intersection names
- Arrows indicating turning direction
- Distance to the next intersection
- Recommended lane indicator

The Traffic Signs Recognition (TSR) system linking display will show the following items:
- Speed Limit Sign

The Audio System linking display will show the following items:
- Songs
- Radio stations

The TEL/SMS linking display will show the following item:
- Caller's name or phone number

The message linking display will show the following item:
- ProPILOT Assist 2.1

WARNING MESSAGE (if so equipped)

When the following system is operated, the warning message appears on the Head Up Display (HUD).
- ProPILOT Assist 2.1
- Automatic Emergency Braking (AEB) with Pedestrian Detection system

For details, see "Vehicle information display warnings and indicators" (P.121).

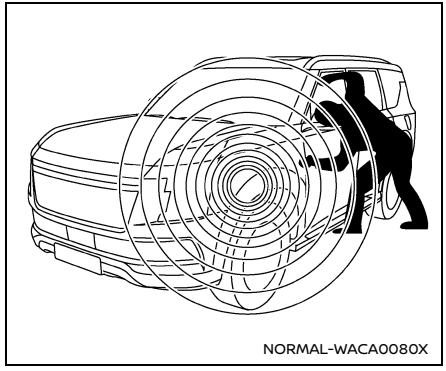
NORMAL-WACA0080X

BASIC INFORMATION

Your vehicle has two types of security systems, as follows:

- Vehicle security system
- NISSAN Vehicle Immobilizer System

VEHICLE SECURITY SYSTEM

Basic information

The vehicle security system provides visual and audio alarm signals if someone opens the doors, hood and liftgate when the system is armed. It is not, however, a motion detection type system that activates when a vehicle is moved or when a vibration occurs.

The system helps deter vehicle theft but cannot prevent it, nor can it prevent the theft of interior or exterior vehicle components in all situations. Always secure your vehicle even if parking for a brief period. Never leave your keys in the vehicle, and always lock it when unattended. Be aware of your surroundings, and park in secure, well-lit areas whenever possible.

Many devices offering additional protection, such as component locks, identification markers, and tracking systems, are available at auto supply stores and specialty shops. Your NISSAN dealer may also offer such equipment. Check with your insurance company to see if you may be eligible for discounts for various theft protection features.

How to arm the vehicle security system

1. Close all windows. **The system can be armed even if the windows are open.**
2. Remove the keys from the vehicle.
3. Close all doors, hood and liftgate. Lock all doors. The doors can be locked with the request switch (on the door handles) or the Intelligent Key.

Even when the driver and/or passengers are in the vehicle, the system will activate with all the doors, hood and liftgate locked with the ignition switch placed in the OFF position. When placing the ignition switch in the ON position, the system will be released.

Vehicle security system activation

The vehicle security system will give the following alarm:

- The headlights blink and the horn sounds intermittently.
- The alarm automatically turns off after approximately 30 seconds. However, the alarm reactivates if the vehicle is tampered with again.

The alarm is activated by:

- opening any doors, the hood or liftgate without using Intelligent Key (even if the door is unlocked by releasing the door inside lock knob).

How to stop an activated alarm

The alarm stops by unlocking a door with the request switch, pushing the UNLOCK button on the Intelligent Key or placing the ignition switch in the ON position.

NISSAN VEHICLE IMMOBILIZER SYSTEM

The NISSAN Vehicle Immobilizer System will not allow the engine to start without the use of the registered key.

If the engine does not start using the registered Intelligent Key, it may be due to interference caused by:

- Another Intelligent Key.
- Automated toll road device.
- Automated payment device.
- Other devices that transmit similar signals.

Start the engine using the following procedure:

1. Remove any items that may be causing the interference away from the Intelligent Key.
2. Start the engine again.

If this procedure allows the engine to start, NISSAN recommends placing the registered Intelligent Key separate from other devices to avoid interference.

Statement related to section 15 of FCC rules for NISSAN Vehicle Immobilizer System (CONT ASSY-SMART KEYLESS)

NOTE:
FCC Notice:
For USA:
This device complies with Part 15 of the FCC Rules. Operation is subject to the following two conditions: (1) this device may not cause harmful interference, and (2) this device must accept any interference received, including interference that may cause undesired operation.
NOTE:
Changes or modifications not expressly approved by the party responsible for compliance could void the user's authority to operate the equipment.
For Canada:
This device contains licence-exempt transmitter(s)/receiver(s) that comply with Innovation, Science and Economic Development Canada's licence-exempt RSS(s). Operation is subject to the following two conditions: (1) This device may not cause interference. (2) This device must accept any interference, including interference that may cause undesired operation of the device.

WIPER AND WASHER SWITCH

BASIC INFORMATION

⚠ WARNING

In freezing temperatures the washer solution may freeze on the window and obscure your vision which may lead to an accident. Warm the window with the defroster before you wash the window.

⚠ CAUTION

- **Do not operate the washer continuously for more than 30 seconds.**
- **Do not operate the washer if the reservoir tank is empty.**
- **Do not fill the window washer reservoir tank with washer fluid concentrates at full strength. Some methyl alcohol based washer fluid concentrates may permanently stain the grille if spilled while filling the window washer reservoir tank.**
- **Pre-mix washer fluid concentrates with water to the manufacturer's recommended levels before pouring the fluid into the window washer reservoir tank. Do not use the window washer reservoir tank to mix the washer fluid concentrate and water.**

If the windshield wiper operation is interrupted by snow or ice, the wiper may stop moving to protect its motor. If this occurs, turn the wiper switch to the OFF position and remove the snow or ice that is on and around the wiper arms. In approximately 1 minute, turn the switch on again to operate the wiper.

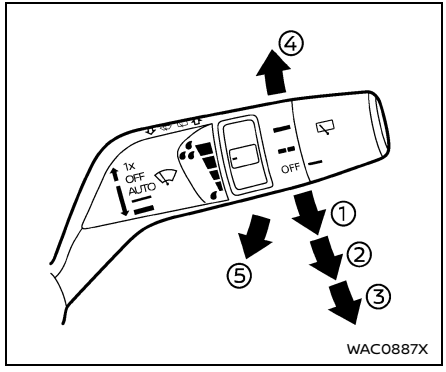

WAC0887X

WINDSHIELD WIPER AND WASHER OPERATION

The windshield wiper and washer operates when the ignition switch is in the ON position.

Push the lever down to operate the wiper at the following speed:

① AUTO — operates the rain-sensing auto wiper system. (See "Rain-sensing auto wiper system" (P.152).)
② Low — continuous low speed operation
③ High — continuous high speed operation
④ Mist — one sweep operation of the wiper

To operate the washer, pull the lever toward the back of the vehicle ⑤ until the desired amount of washer fluid is spread on the windshield. The wiper will automatically

operate several times.

Wiper drip wipe system:

The wiper will also operate once about 3 seconds after the washer and wiper are operated. This operation is to wipe washer fluid that has dripped on the windshield.

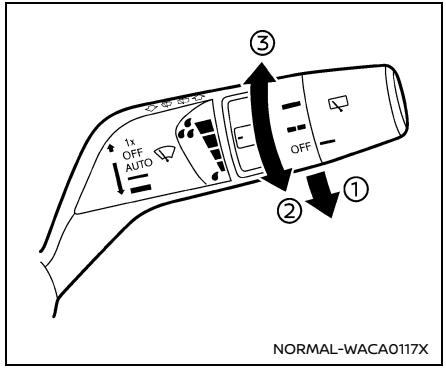

NORMAL-WACA0117X

RAIN-SENSING AUTO WIPER SYSTEM

Basic information

The rain-sensing auto wiper system can automatically turn on the wipers and adjust the wiper speed depending on the rainfall and the vehicle speed by using the rain sensor located on the upper part of the windshield.

To set the rain-sensing auto wiper system, push the lever down to the AUTO position ①. The wiper will sweep once while the ignition switch is in the ON position.

The rain sensor sensitivity level can be adjusted by turning the knob toward ② (Low) or ③ (High).

- High — High sensitive operation
- Low — Low sensitive operation

To turn the rain-sensing auto wiper system off, push up the lever to the OFF position, or pull down the lever to the Low or High position.

⚠ CAUTION

Do not touch the rain sensor and around it when the wiper switch is in the AUTO position and the ignition switch is in the ON position. The wipers may operate unexpectedly and cause to an injury or may damage a wiper.

- **The rain-sensing auto wipers are intended for use during rain. If the switch is left in the AUTO position, the wipers may operate unexpectedly when dirt, fingerprints, oil film or insects are stuck on or around the sensor. The wipers may also operate when exhaust gas or moisture affect the rain sensor.**
- **The rain-sensing auto wipers may not operate if rain does not hit the rain sensor even if it is raining.**
- **When the windshield glass is coated with water repellent, the speed of the rain-sensing auto wipers may be higher even though the amount of the rainfall is small.**
- **Be sure to turn off the rain-sensing auto wiper system when you use a car wash.**

- **When the ignition switch is in the ON position and the vehicle speed is below approximately 5 MPH (8 km/h) with the shift position is in the N (Neutral) position, the rain-sensing auto wipers will not operate.**
- **Using genuine wiper blades is recommended for proper operation of the rain-sensing auto wiper system. (See "Windshield wiper blades" (P.480) for wiper blade replacement.)**

How to enable/disable the rain-sensing auto wiper system

The rain-sensing auto wiper system can be enabled/disabled in the vehicle information display.
See "Vehicle Settings" (P.115) for more details.

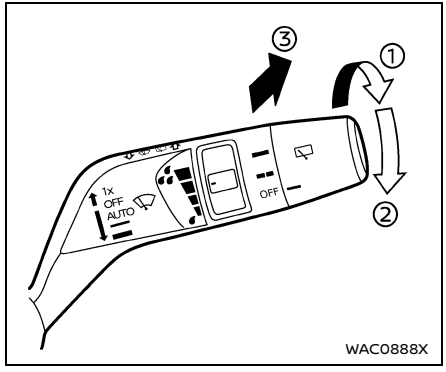

WAC0888X

REAR WINDOW WIPER AND WASHER OPERATION

If the rear window wiper operation is interrupted by snow etc., the wiper may stop moving to protect its motor. If this occurs, turn the wiper switch to OFF and remove the snow etc. on and around the wiper arms. After about 1 minute, turn the switch ON again to operate the wiper.

The rear window wiper and washer operate when the ignition switch is in the ON position.
Turn the switch clockwise from the OFF position to operate the wiper.

① Intermittent — intermittent operation (not adjustable)
② Low — continuous low speed operation

Push the switch forward ③ to operate the washer. Then the wiper will also operate several times.

Rear window wiper service position:

After the engine is turned off (Auto ACC is activated), rapidly push the switch forward ③ to operate the washer twice within 0.75 seconds. This action will cause the rear window wiper arm to take the service position.
To return the rear window wiper arm, when the engine has been stopped (Auto ACC is activated) turn the switch clockwise or push the switch forward again.

Reverse Link feature:

When the windshield wiper switch is on, shift the transmission to the R (Reverse) position will operate the rear window wiper.

NOTE:
The Reverse Link feature may be disabled. For additional information, refer to "Vehicle Settings" (P.115).

REAR WINDOW DEFROSTER AND OUTSIDE MIRROR DEFROSTER (if so equipped)

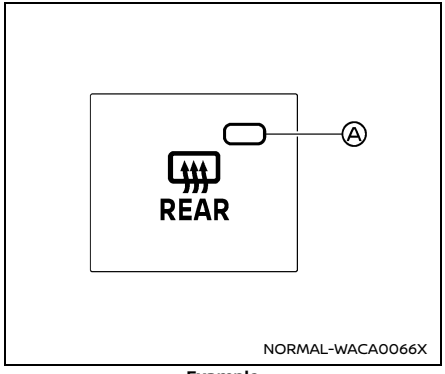

Example

The defroster switch is located on the front air conditioner control panel.

To defog/defrost the rear window glass and outside mirrors (if so equipped), start the engine and push the switch on. The indicator light Ⓐ will illuminate. Push the switch again to turn the defroster off.

It will automatically turn off in approximately 20 minutes.

⚠ CAUTION

When cleaning the inner side of the rear window, be careful not to scratch or damage the rear window defroster.

WINDSHIELD DEICER (if so equipped)

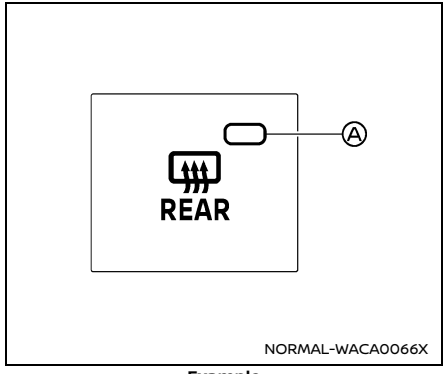

Example

The deicer is used to remove ice from the windshield when a wiper is frozen to the windshield.

To defrost the windshield, start the engine and push the switch. The indicator light Ⓐ will illuminate and the deicer operates for approximately 20 minutes. The rear window defroster will activate at the same time. After the preset time has passed, the deicer will turn off automatically. To turn off the deicer manually, push the switch again.

⚠ CAUTION

- **When operating the deicer continuously, be sure to start the engine. Otherwise, it may cause the battery to discharge.**
- **When cleaning the inner side of the window, be careful not to scratch or damage the electrical conductors on the surface of the window.**

HEADLIGHT AND TURN SIGNAL SWITCH

HEADLIGHT SWITCH

Basic information

CAUTION

Use the headlights with the engine running to avoid discharging the vehicle battery.

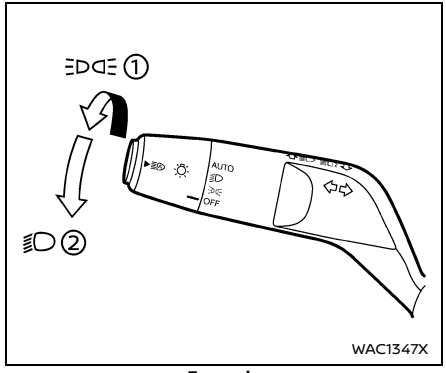

Example

Lighting

Type A (if so equipped):

① Rotate the switch to the position, and the front parking, tail, license plate, and instrument panel lights will come on.

② Rotate the switch to the position, and the headlights will come on and all the other lights remain on. The daytime running light will turn off.

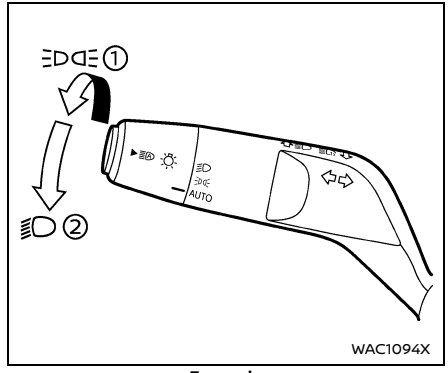

Example

Type B (if so equipped):

① Rotate the switch to the position, and the front parking, tail, license plate, and instrument panel lights will come on. The Intelligent Auto Headlights will also be set in this position.

② Rotate the switch to the position, and the headlights will come on and all the other lights remain on. The daytime running light will turn off.

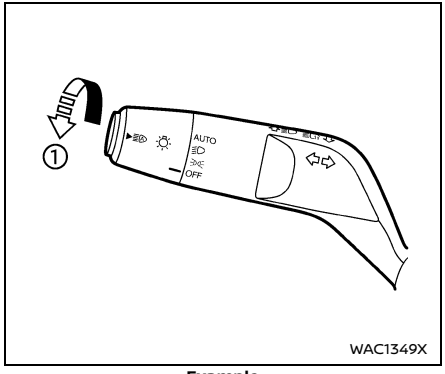

Example

Intelligent Auto Headlights

Type A (if so equipped):

The Intelligent Auto Headlights allows the headlights to be set so they turn on and off automatically.

To set the Intelligent Auto Headlights:

1. Make sure the headlight switch is in the AUTO position ①.
2. Place the ignition switch in the ON position.
3. The Intelligent Auto Headlights automatically turns the headlights on and off.

To turn the Intelligent Auto Headlights off, turn the switch to the OFF, ≡D≡ or ≡D position.

The Intelligent Auto Headlights can turn on the headlights automatically when it is dark and turn off the headlights when it is light.

The headlights will also be turned on automatically at twilight or in rainy weather (when the windshield wiper is operated continuously).

If the ignition switch is placed in the OFF position and one of the doors is opened and this condition is continued, the headlights remain on for 5 minutes.

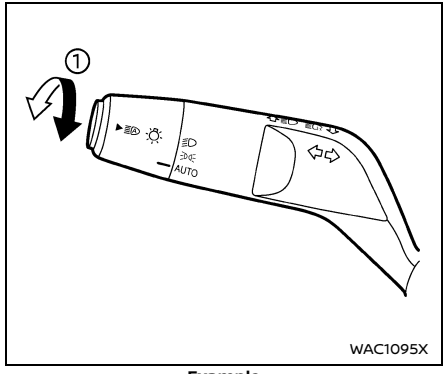

Example

Type B (if so equipped):

The Intelligent Auto Headlights allows the headlights to be set so they turn on and off automatically.

To set the Intelligent Auto Headlights:

1. Make sure the headlight switch is in the ≡D≡ or AUTO position ①.
2. Place the ignition switch in the ON position.
3. The Intelligent Auto Headlights automatically turns the headlights on and off.

To turn the Intelligent Auto Headlights off, turn the switch to the ≡D position.

The Intelligent Auto Headlights can turn on the headlights automatically when it is dark and turn off the headlights when it is light.

If the ignition switch is placed in the ON position when the parking brake is applied, the headlights remain off.

With the position selected, the headlights turn off when the ignition switch is placed in the OFF position, the shift position is placed in the P (Park) position or the parking brake is applied. (The front parking, tail, license plate, and instrument panel lights are on.)

The headlights will also be turned on automatically at twilight or in rainy weather (when the windshield wiper is operated continuously).

With the AUTO position selected (headlights are on), if the ignition switch is placed in the OFF position and one of the doors is opened and this condition is continued, the headlights remain on for 5 minutes.

Automatic headlights off delay:

You can keep the headlights on for up to 180 seconds after you place the ignition switch in the OFF and open any door then close all the doors. You can adjust the period of the automatic headlights off delay from 0 seconds (OFF) to 180 seconds. The factory default setting is 30 seconds.

For automatic headlights off delay setting, see "Vehicle Settings" (P.115).

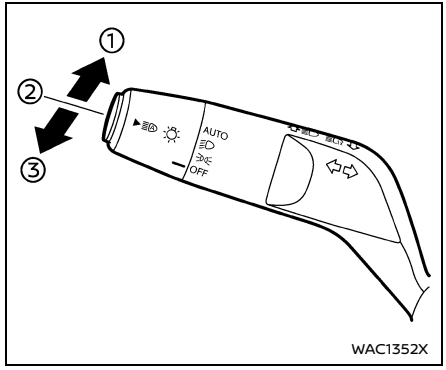

Example

Headlight beam select

① To select the high beam, push the lever forward and release it. The high beam lights come on and the light illuminates.

② Pull the lever back and release it to select the low beam.

③ To flash the headlights when the high beam is not selected, pull the lever towards the rear position. To flash the headlights when the high beam is selected, pull the lever twice towards the rear position.

High beam assist

The high beam assist system will operate when the vehicle is driven at speeds of approximately 19 MPH (30 km/h) and above. If an oncoming vehicle or leading vehicle appears in front of your vehicle when the headlight high beam is on, the headlight will be switched to the low beam automatically.

Precautions on high beam assist:

⚠ WARNING

- **The high beam assist system is a convenience but it is not a substitute for safe driving operation. The driver should remain alert at all times, ensure safe driving practices and switch the high beams and low beam manually when necessary.**
- **The high beam or low beam may not switch automatically under the following conditions. Switch the high beam and low beam manually.**
  - **During bad weather (rain, fog, snow, wind, etc.).**
  - **When a light source similar to a headlight or tail light is in the vicinity of the vehicle.**
  - **When the headlights of the oncoming vehicle or the leading vehicle are turned off, when the color of the light is affected due to foreign materials on the lights, or when the light beam is out of position.**

- **When there is a sudden, continuous change in brightness.**
- **When driving on a road that passes over rolling hills, or a road that has level differences.**
- **When driving on a road with many curves.**
- **When a sign or mirror-like surface is reflecting intense light towards the front of the vehicle.**
- **When the container, etc. being towed by a leading vehicle is reflecting intense light.**
- **When a headlight on your vehicle is damaged or dirty.**
- **When the vehicle is leaning at an angle due to a punctured tire, being towed, etc.**

- **The timing of switching the low beam and high beam may change under the following situations.**
  - **The brightness of the headlights of the oncoming vehicle or leading vehicle.**
  - **The movement and direction of the oncoming vehicle and the leading vehicle.**
  - **When only one light on the oncoming vehicle or the leading vehicle is illuminated.**
  - **When the oncoming vehicle or the leading vehicle is a two-wheeled vehicle.**
  - **Road conditions (incline, curve, the road surface, etc.).**
  - **The number of passengers and the amount of cargo.**

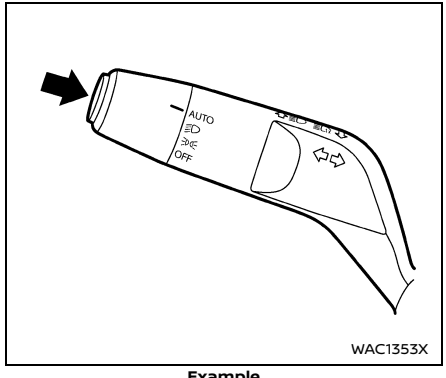

Example

High beam assist operations:

To activate the high beam assist system, push the switch as illustrated with the AUTO position (or position, depending on the model). The high beam assist indicator light in the meter will illuminate while the headlights are turned on.

If the high beam assist indicator light does not illuminate in the above condition, it may indicate that the system is not functioning properly. It is recommended you have the system checked by a NISSAN dealer.

When the vehicle speed lowers to less than approximately 13 MPH (20 km/h), the headlight remains the low beam.

To turn off the high beam assist system, push the switch again.

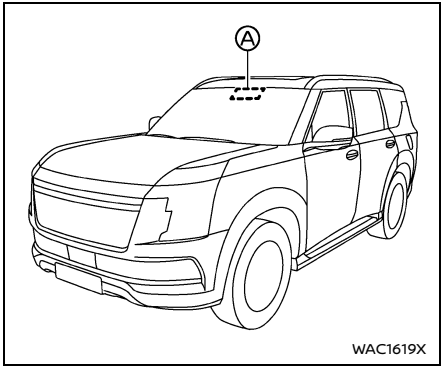

Ambient image sensor maintenance:

The ambient image sensor Ⓐ for the high beam assist system is located in front of the inside mirror. To keep the proper operation of the high beam assist system and prevent a system malfunction, be sure to observe the following:

- Always keep the windshield clean.
- Do not attach a sticker (including transparent material) or install an accessory near the ambient image sensor.
- Do not strike or damage the areas around the ambient image sensor. Do not touch the sensor lens that is located on the ambient image sensor.

If the ambient image sensor is damaged due to an accident, it is recommended you contact a NISSAN dealer.

Battery saver system

- When the headlight switch is in the ≡D or 🚗 position while the ignition switch is in the ON position, the lights will automatically turn off within a period of time after the ignition switch has been placed in the OFF position.
- When you turn on the headlight switch after the ignition switch has been placed in the OFF position, the lights will automatically turn off after about 5 minutes.
- When the headlight switch remains in the ≡D or 🚗 position after the lights automatically turn off, the lights will turn on when the ignition switch is placed in the ON position.

⚠ CAUTION

- **Be sure to turn the light switch to the OFF (if so equipped) or the AUTO position when you leave the vehicle for extended periods of time to prevent the battery being discharged.**
- **Never leave the light switch on when the engine is not running for extended periods of time even if the headlights turn off automatically.**

Daytime Running Light (DRL) system

The LED Daytime Running Lights (DRL) automatically illuminate when the engine is started and the parking brake is released. The LED DRL operate with the headlight switch in the OFF (if so equipped), ≡D (type A: when it is light or dark, type B: when it is light), or AUTO (when the headlights are off) position. When you turn the headlight switch to the 🚗 position for full illumination, the LED lights switch from LED DRL to the park function.

If the parking brake is applied before the engine is started, the LED DRL do not illuminate. The LED DRL illuminate when the parking brake is released. This feature will work in the ≡D, AUTO or OFF (if so equipped) position. The LED DRL will remain on until the ignition switch is placed in the OFF position.

⚠ WARNING

When the LED DRL system is active with the headlight switch in the OFF position (if so equipped), tail lights on your vehicle are not on. It is necessary at dusk to turn on your headlights. Failure to do so could cause an accident injuring yourself and others.

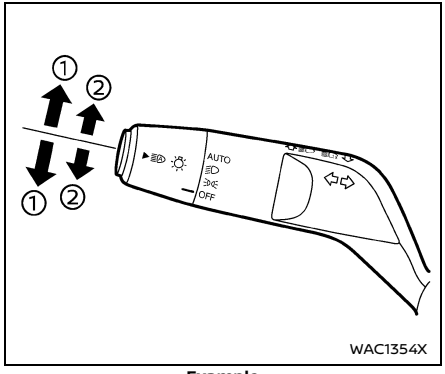

Example

TURN SIGNAL SWITCH

① Turn signal

Move the lever up or down to signal the turning direction. When the turn is completed, the turn signals cancel automatically.

Models with automatic return lever:

The lever will return to the neutral position after moving and then releasing it. To cancel the turn signals, lightly move the lever to the position ② of the opposite direction and then release it quickly.

② Lane change signal

Move the lever up or down until the turn signal begins to flash, but the lever does not latch, to signal a lane change. Hold the lever until the lane change is completed.

Move the lever up or down until the turn signal begins to flash, but the lever does not latch, and release the lever. The turn signal will automatically flash three times.

Choose the appropriate method to signal a lane change based on road and traffic conditions.

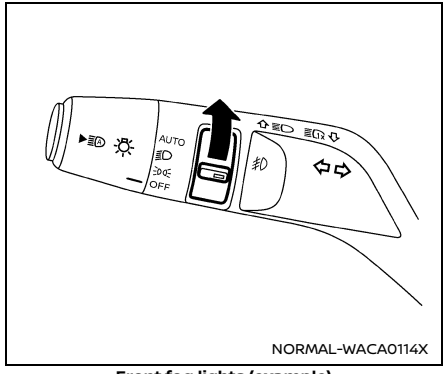

Front fog lights (example)

BASIC INFORMATION

FRONT FOG LIGHTS

To turn the fog lights on, turn the headlight switch to the position, then turn the switch to the position.

To turn them off, turn the switch to the OFF position. The headlights must be on with the low beams selected for the fog lights to operate. The fog lights automatically turn off when the high beam headlights are selected.

HORN

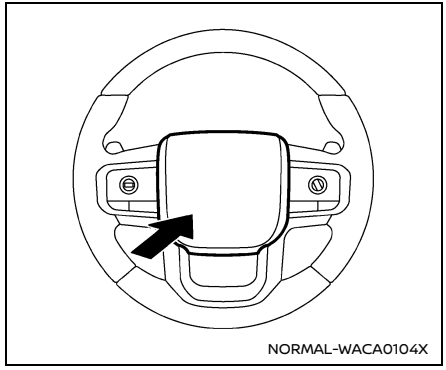

To sound the horn, push the center pad area of the steering wheel.

WARNING

Do not disassemble the horn. Doing so could affect proper operation of the supplemental front air bag system. Tampering with the supplemental front air bag system may result in serious personal injury.

HEATED STEERING WHEEL (if so equipped)

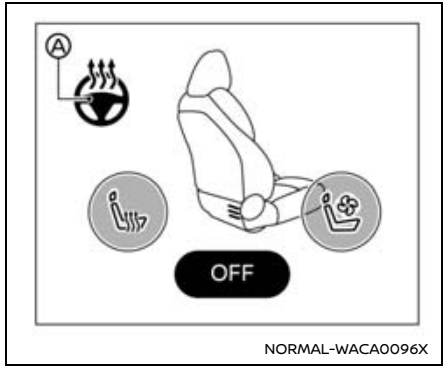

Example

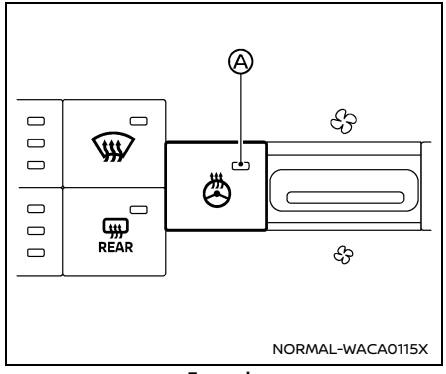

Example

The control key is displayed on the touch screen display.

The heated steering wheel switch is located on the instrument panel.

1. Start the engine.
2. Touch the key Ⓐ or push the heated steering wheel switch to turn on or off the heated steering wheel.
   ON: the color of the key turns orange, or the indicator Ⓐ on the switch illuminates.
   OFF: the color of the key turns white, or the indicator Ⓐ on the switch turns off.

If the surface temperature of the steering wheel is below 86 to 104°F (30 to 40°C), the system will heat the steering wheel and cycle off and on to maintain a temperature above 86 to 104°F (30 to 40°C). The indicator light will remain on as long as the system is on.

The heated steering wheel system is automatically turned off after 30 minutes.

HEATED SEATS (if so equipped)

BASIC INFORMATION

⚠ WARNING

Do not use or allow occupants to use the seat heater if you or the occupants cannot monitor elevated seat temperatures or have an inability to feel pain in body parts that contact the seat. Use of the seat heater by such people could result in serious injury.

⚠ CAUTION

- **Do not use the seat heater for extended periods or when no one is using the seat.**
- **Do not put anything on the seat which insulates heat, such as a blanket, cushion, seat cover, etc. Otherwise, the seat may become overheated.**
- **Do not place anything hard or heavy on the seat or pierce it with a pin or similar object. This may result in damage to the heater.**
- **Any liquid spilled on the heated seat should be removed immediately with a dry cloth.**
- **When cleaning the seat, never use gasoline, thinner, or any similar materials.**
- **If any malfunctions are found or the heated seat does not operate, turn the switch off and have the system checked. It is recommended you visit a NISSAN dealer for this service.**

The front and 2nd row seats (if so equipped) are warmed by built-in heaters. The control keys are displayed on the touch screen display, and the switches are located on the instrument panel (if so equipped) and the back of the center console box (if so equipped), and can be operated independently of each other.

The heater is controlled by a control module, automatically adjusting the heat level to maintain comfort according to the selected heat range.

The temperature control intensity level can be selected by the touch screen display. See "Climate" (P.144).

When the vehicle's interior is warmed, or before you leave the vehicle, be sure to turn off the seat heater.

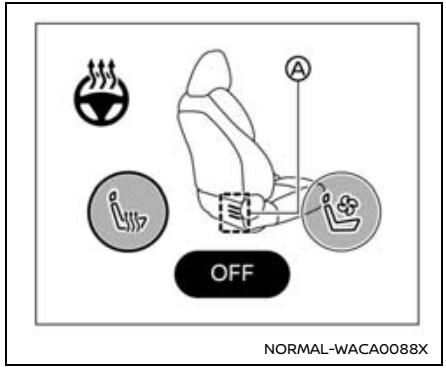

Example

OPERATION WITH TOUCH SCREEN DISPLAY

1. Start the engine.
2. Touch the key to select the desired heat range.
   - For high heat, touch the key once.
   - For medium heat, touch the key twice.
   - For low heat, touch the key three times.
   - The indicator Ⓐ illuminates depending on the heat level.
3. To turn off the heater, touch the key repeatedly until the indicator Ⓐ goes off.

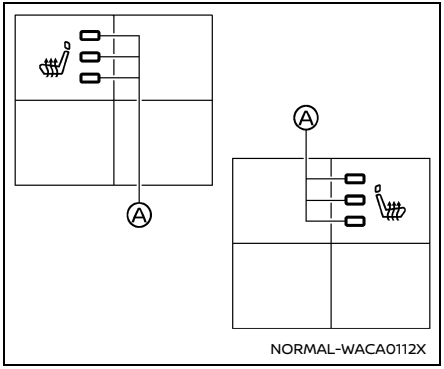

For front seats

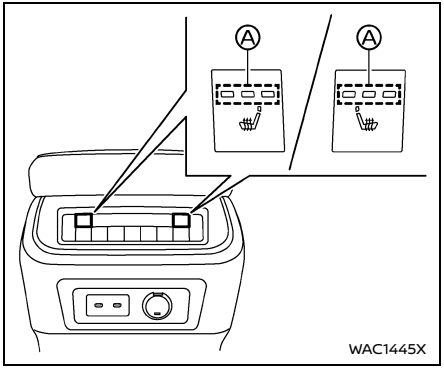

For 2nd row seats (if so equipped)

OPERATION WITH SWITCH

1. Start the engine.
2. Push the heated seat switch and select the desired heat range.
   - For high heat, push the switch once.
   - For medium heat, push the switch twice.
   - For low heat, push the switch three times.
   - The indicator light Ⓐ on the switch will illuminate depending on the heat level when the heater is on.
3. To turn off the heater, push the heated seat switch until the indicator light turns off.

VENTILATED SEATS (if so equipped)

BASIC INFORMATION

⚠ CAUTION

- **Do not use the ventilated seat for extended periods or when no one is using the seat.**
- **Do not place anything hard or heavy on the seat or pierce it with a pin or similar object. This may result in damage to the ventilated seat.**
- **Any liquid spilled on the seat should be removed immediately with a dry cloth.**
- **When cleaning the seat, never use gasoline, thinner, or any similar materials.**
- **If any malfunctions are found or the ventilated seat does not operate, turn the switch off and have the system checked. It is recommended you visit a NISSAN dealer for this service.**

The ventilated seats ventilate the surface of the front seats. The control keys are displayed on the touch screen display and the switches are located on the instrument panel, and can be operated independently of each other.

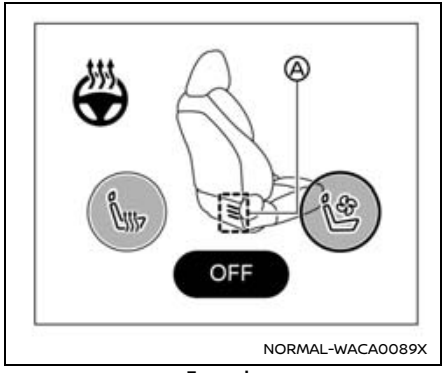

Example

OPERATION WITH TOUCH SCREEN DISPLAY

1. Start the engine.
2. Touch the or key (once, twice or three times). The indicator Ⓐ illuminates in blue depending on the ventilation level.
3. To turn off, touch the key repeatedly until the indicator Ⓐ goes off.

Before you leave the vehicle, be sure to turn off the ventilated seats.

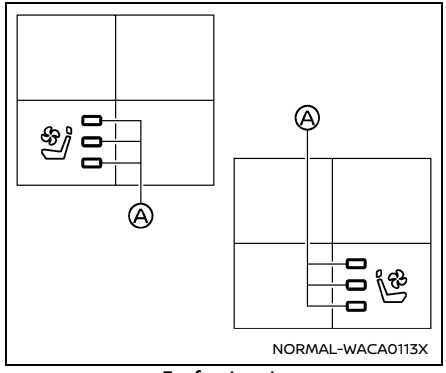

For front seats

OPERATION WITH SWITCH

1. Start the engine.
2. Push the or switch (once, twice or three times). The indicator Ⓐ illuminates in blue depending on the ventilation level.
3. To turn off, push the switch repeatedly until the indicator turns off.

Before you leave the vehicle, be sure to turn off the ventilated seats.

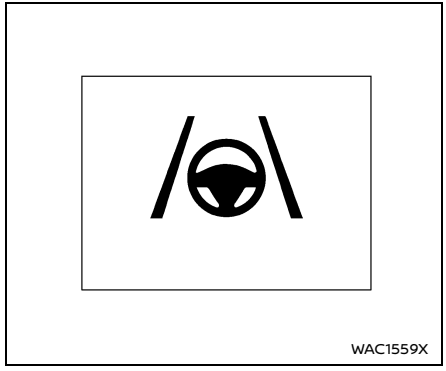

The Steering Assist switch is used to temporarily turn on and off the Steering Assist system.

You can also use the "Driver Assistance" menu in the vehicle information display to turn on and off the Steering Assist system. (See "Settings" (P.113).)

The Steering Assist system controls the steering system to help keep your vehicle near the center of the lane when driving. (See "ProPILOT Assist Systems" (P.349).)

VEHICLE DYNAMIC CONTROL (VDC) OFF SWITCH

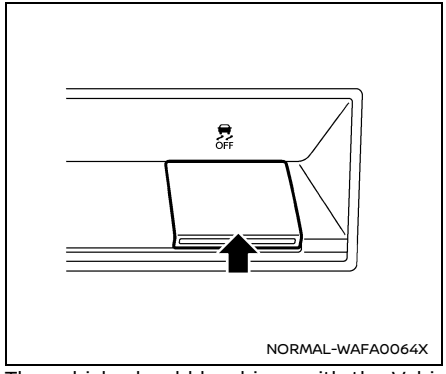

NORMAL-WAFA0064X

The vehicle should be driven with the Vehicle Dynamic Control (VDC) system on for most driving conditions.

If the vehicle is stuck in mud or snow, the VDC system reduces the engine output to reduce wheel spin. The engine speed will be reduced even if the accelerator is depressed to the floor. If maximum engine power is needed to free a stuck vehicle, turn the VDC system off.

To turn off the VDC system, push and hold the VDC OFF switch. The OFF indicator will illuminate.

Push the VDC OFF switch again or restart the engine to turn on the system. (See "Vehicle Dynamic Control (VDC) system" (P.422).)

HILL DESCENT CONTROL SWITCH (if so equipped)

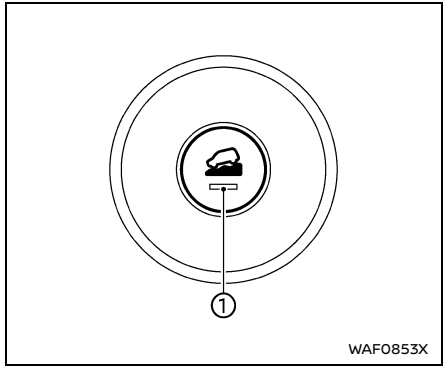

WAF0853X

WARNING

- **Never rely solely on the hill descent control system to control vehicle speed when driving on steep downhill grades. Always drive carefully when using the hill descent control system and decelerate the vehicle speed by depressing the brake pedal if necessary. Be especially careful when driving on frozen, muddy or extremely steep downhill roads. Failure to control vehicle speed may result in a loss of control of the vehicle and possible serious injury or death.**
- **The hill descent control may not control the vehicle speed on a hill under all load or road conditions. Always be prepared to depress the brake pedal to control vehicle speed. Failure to do so may result in a collision or serious personal injury.**

CAUTION

When the hill descent control system operates continuously for a long time, the temperature of the VDC system may increase and the hill descent control system may be temporarily disabled (the indicator light ① will blink). If the indicator light does not come on continuously after blinking, stop using the system.

The hill descent control system is designed to reduce driver workload when going down steep hills. The hill descent control system helps to control vehicle speed so the driver can concentrate on steering the vehicle.

To activate the hill descent control system:

- The shift button must be in forward or reverse gear,
- The 4WD switch must be in the 4L position and the vehicle speed must be under 20 MPH (30 km/h) or

- The 4WD switch must be in the 4H position and the vehicle speed must be under 20 MPH (30 km/h), and
- The hill descent control system switch must be ON.

The hill descent control system on indicator light on the meter will come on when the system is activated. Also, the stop/tail lights illuminate while the hill descent control system applies the brakes to control vehicle speed.

If the accelerator or brake pedal is depressed while the hill descent control system is on, the system will stop operating temporarily. As soon as the accelerator or brake pedal is released, the hill descent control system begins to function again if the hill descent control operating conditions are fulfilled.

The hill descent control system on indicator light blinks if the switch is on and all conditions for system activation are not met or if the system becomes disengaged for any reason.

To turn off the hill descent control system, push the switch to the OFF position.

For additional information, see "Hill descent control system on indicator light (if so equipped)" (P.106) and "Hill descent control system (if so equipped)" (P.426).

DIFFERENTIAL LOCK MODE SWITCH (if so equipped)

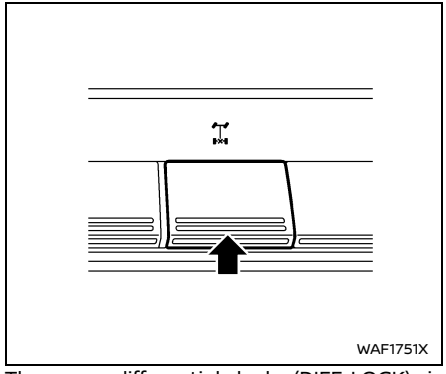

The rear differential lock (DIFF-LOCK) is designed to transmit engine power to the left and right wheels equally.

To lock the rear differential gear, reduce the vehicle speed below 4 MPH (7 km/h) and turn the 4WD shift switch to the 4L position. Then push the differential lock mode switch on. The differential lock (DIFF-LOCK) indicator light " DIFF LOCK " will blink in the meter and then stay on when the differential gear is completely locked.

After using the rear differential lock (DIFF-LOCK) push the differential lock mode switch again to off. The DIFF-LOCK indicator light will turn off after the differential lock is released.

(See "Rear differential lock system (if so equipped)" (P.412).)

- **The rear differential lock-up device operates only when the engine is running.**
- **In 4WD AUTO or 4H mode, the rear differential lock-up device does not operate when the differential lock mode switch is turned to the "ON" position. (The DIFF-LOCK indicator light will flash.)**

⚠ WARNING

- **Use the rear differential lock (DIFF-LOCK) only in an emergency when it is not possible to free a stuck vehicle even when using the 4L position.**
- **When the DIFF-LOCK is in operation, turning the vehicle becomes difficult. This can be dangerous, especially at high speeds. Doing so could damage the drivetrain components.**
- **While DIFF-LOCK is on, the Antilock Braking System (ABS) warning light illuminates. This indicates that antilock function may not fully operate.**
- **Do not operate the DIFF-LOCK when the vehicle is turning or when one side wheel is rotating. Otherwise the power train system parts could be damaged.**
- **Avoid quick starts while the DIFF-LOCK is in operation. Otherwise the power train system parts could be damaged.**

Observe the above precautions. Otherwise, loss of normal steering control may occur, which may result in an accident and serious injury or death.

TRAILER BRAKE CONTROLLER UNIT (TBCU) (if so equipped)

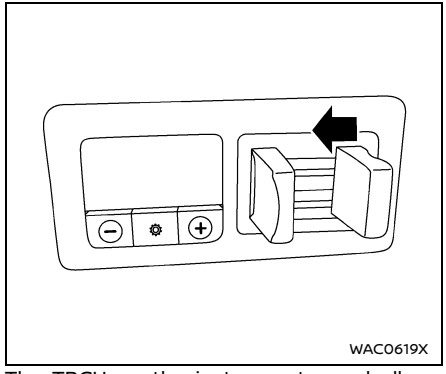

The TBCU on the instrument panel allows the driver to adjust the braking force applied to the trailer brakes. See "Trailer Brake Controller Unit (TBCU) (if so equipped)" (P.547).

REAR DOOR ALERT

The Rear Door Alert system functions under certain conditions to indicate there may be an object or passenger in the rear seat(s). Check the seat(s) before exiting the vehicle.

The Rear Door Alert system is initially enabled. The driver can disable the system using the vehicle information display. (See "Vehicle Settings" (P.115).)

When the system is enabled:

- The system is activated when a rear door is opened and closed.
- The time interval to activate the system between when the rear door is opened and the vehicle is started is about 15 minutes. A longer interval does not indicate a malfunction.

Type A (if so equipped):

When "Horn & Alert" setting is selected:

- When the ignition switch is placed in the OFF position, a notification message appears in the vehicle information display with the options to “Dismiss Message” or “Disable Alert” if desired.
  - Select “Disable Alert” to temporarily disable for that stop.
  - No selection or “Dismiss Message” will keep the alert enabled for that stop.
- If the alert is enabled when a driver exits the vehicle, a message will appear in the vehicle information display that states “Check Rear Seat”.
- An audible horn sound will occur after a short time unless a rear door is opened within a short time to deactivate the alert.

- If the doors are locked before the alert is deactivated by opening a rear door, the horn will sound.
- If the liftgate is opened before a rear door is opened, the horn will be delayed until after the liftgate is closed.

NOTE:
If "Alert Only" setting is selected, the message alert will still be shown in the vehicle information display but the horn will not sound.

⚠ WARNING

The system does not directly detect objects or passengers in the rear seat(s). Instead, it can detect when a rear door is opened and closed, indicating that there may be something in the rear seat(s).

NOTE:
There may be times when the horn sounds but there are no objects or passengers in the rear seat(s).
(See "Check Rear Seat indicator (if so equipped)" (P.127).)

Type B (if so equipped):
When "Rear Door Alert" setting is ON:

- When the ignition switch is placed in the OFF position, a notification message appears in the vehicle information display that states "Check Rear Seat".

⚠ WARNING

The system does not directly detect objects or passengers in the rear seat(s). Instead, it can detect when a rear door is opened and closed, indicating that there may be something in the rear seat(s).

POWER OUTLET

BASIC INFORMATION

⚠ CAUTION

- **Use power outlet with the engine running to avoid discharging the vehicle battery.**
- **Avoid using power outlet when the air conditioner, headlights or rear window defroster is on.**
- **Before inserting or disconnecting a plug, be sure the electrical accessory being used is turned OFF.**
- **When not in use, be sure to close the cap. Do not allow water or any liquid to contact the outlet.**

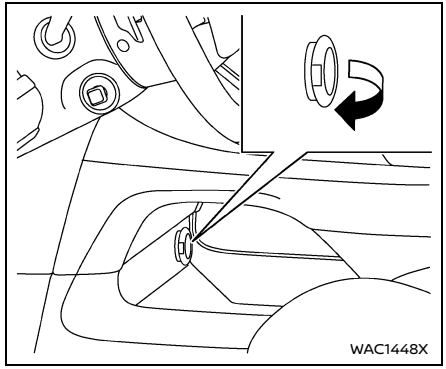

Power outlet (type A)

The power outlet is located as shown.
Open the lid to use.

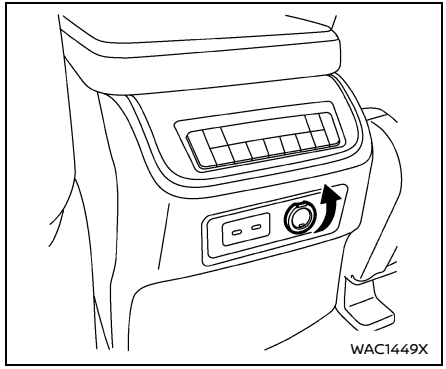

Power outlet (type A)

Type A:
The power outlet is used for powering electrical accessories such as cellular telephones.

CAUTION

- **The outlet and plug may be hot during or immediately after use.**
- **Do not use with accessories that exceed a combined power draw of 12 volts, 120W (10A) for all the power outlets. Do not use double adapters or more than one electrical accessory.**
- **This power outlet is not designed for use with a cigarette lighter unit.**
- **Push the plug in as far as it will go. If good contact is not made, the plug may overheat or the internal temperature fuse may blow.**

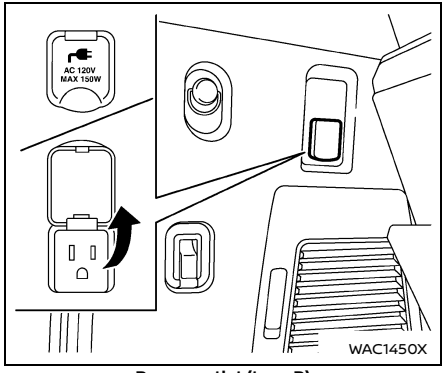

Power outlet (type B)

Type B (if so equipped):

The power outlet (plug type) is located on the left side trim of the cargo area. It can operate when the ignition switch is in the ON position.

The specification of this power outlet is for use of a 120 volt, 150W (1.25A) power draw.

Pull up the cover and plug in.

After using the power outlet, be sure to turn off the main switch.

⚠ CAUTION

- **Do not use with accessories that exceed a 120 volt, 150W (1.25A) power draw.**
- **Use this power outlet with the engine running. (If the engine is stopped, this could result in a discharged battery.)**

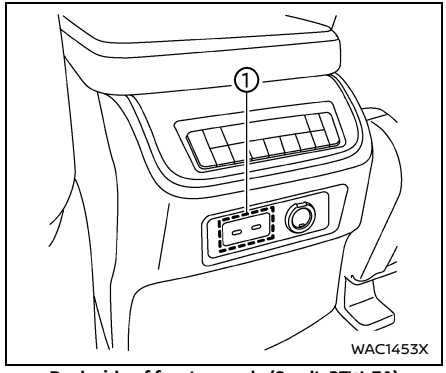

Back side of front console (9 volt, 27W, 3A)

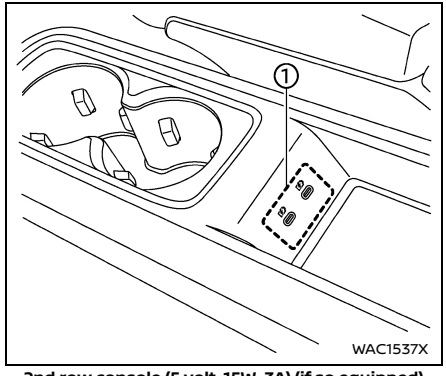

2nd row console (5 volt, 15W, 3A) (if so equipped)

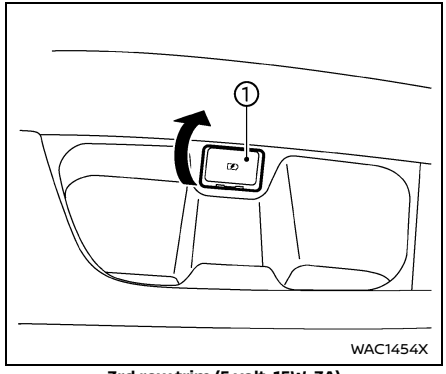

3rd row trim (5 volt, 15W, 3A)

USB (Universal Serial Bus) CHARGING CONNECTOR

The Type-C USB charging connector ① can be used only for charging an external device.

Connect a USB device into the connector. Charging will start automatically (see the preceding illustrations for each maximum output).

The external device will be charged continuously while the ignition switch is in the ON position.

Some mobile devices cannot be charged depending on their specifications.

⚠ CAUTION

- **Do not force a USB device into the connector. Inserting the USB device tilted into the connector may damage the connector. Make sure that the USB device is connected correctly into the connector.**
- **Do not grab the USB connector cover when pulling the USB device out of the connector. This could damage the connector and the cover.**

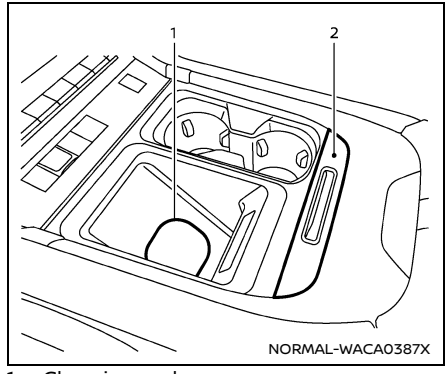

1. Charging pad
2. Lid

MAGNETIC WIRELESS CHARGER (if so equipped)

The magnetic wireless charger is located inside the lid. Slide the lid to open. Place the smartphone on the center of the charging pad. Charging will start automatically. The smartphone will be charged continuously while the ignition switch is in the ON position.

⚠ WARNING

- **Never put metallic materials such as coins between the wireless charger and a smartphone.**

- **Those who use a pacemaker or other medical equipment should contact the electric medical equipment manufacturer for the possible influences before use.**
- **Never put cloth over the smartphone during charging process.**
- **Never charge a smartphone when it is wet.**
- **While charging, never put metallic materials or small goods such as a cigarette lighter, Intelligent Key or memory drive between the wireless charger and a smartphone.**

⚠ CAUTION

- **Do not put an RFID/NFC/credit card between the wireless charger and a smartphone. This could cause data corruption in the card.**
- **Do not use the wireless charger with dust accumulated or dirt on the pad.**
- **Do not hit the surface of the wireless charger.**
- **Do not spill liquid (water, drinks, etc.) on the charging pad.**
- **Do not use grease, oil or alcohol for cleaning charging pad.**

Wireless charger operation

To use the magnetic wireless charger, place your phone on the center of the charging pad. If you are using a compatible device or accessory, magnetic alignment will assist in securing the device in the optimal charging position. To optimize the charging performance, use a Qi2 compatible phone or phone case equipped with a magnetic ring.

NOTE:

- **Only a Qi or Qi2 compatible smartphone can be used.**
- **Wireless charging only operates within fixed temperature range (depends on the smartphone model).**
- **Leaving lid open while wireless charging could improve charging efficiency.**
- **The charging may not be possible depending on the smartphone type. Please refer to your smartphone's instruction manual for details.**
- **Smartphones that are too large to be placed on the charging pad cannot be charged.**
- **If you charge your smartphone while using apps or immediately after using apps, the smartphone or the wireless charger may be warmed during charging process and the charging may stop by the protection function of the smartphone or the wireless charger. This is not a malfunction. If this occurs, restart charging after the smartphone or the wireless charger has cooled down.**
- **The wireless charging process may be limited or stopped by the status of the smartphone (battery temperature, etc.) and surrounding environment. In particular, if the interior of a vehicle is excessively hot, charging may not function properly. If this occurs, using the charging feature after the cabin temperature has decreased.**
- **Android smartphones and iPhones that do not have built-in magnets may not remain properly aligned on the charging pad, which can result in unsuccessful charging. To ensure stable positioning and effective charging, please use a case that complies with the Qi2 standard.**
- **Even if smartphone supports the Qi2 standard, wireless charging may not work properly if you are using a case without built-in magnets.**
- **The wireless charging process will stop during process of searching for the Intelligent Key.**
- **The wireless charging process will not be started when a USB (Universal Serial Bus) cable is connected to the smartphone.**
- **Depending on radio reception conditions, electromagnetic signals from the wireless charger may cause noise in radio audio.**
- **Charging performance may be affected by smartphone operating system updates. For more information, please contact device manufacturer.**

This device complies with part 15 of the FCC Rules and RSS-Gen of IC Rules.

Operation is subject to the following two conditions:

(1) This device may not cause harmful interference, and

(2) This device must accept any interference received, including interference that may cause undesired operation.

Changes or modifications not expressly approved by the party responsible for compliance could void the user's authority to operate the equipment.

RF Radiation Exposure Statement: This equipment complies with FCC RF Radiation exposure limits set forth for an uncontrolled environment.

This device and its antenna must not be co-located or operating in conjunction with any other antenna or transmitter.

This equipment should be installed and operated with a minimum distance of 15 cm between the radiator and your body.

ISED Compliance Statement

This device complies with RSS-Gen of IC Rules

Operation is subject to the following two conditions:

(1) This device may not cause harmful interference, and

(2) This device must accept any interference received, including interference that may cause undesired operation.

Changes or modifications made to this device, not expressly approved by the party responsible for compliance will void the user's authority to operate the equipment.

ISED RF Radiation Exposure Statement:

This equipment complies with ISED RF Radiation exposure limits set forth for an uncontrolled environment. This device and its antenna must not be co-located or operating in conjunction with any other antenna or transmitter. This equipment should be installed to operate with a minimum distance of 15 cm between the radiator and the end-user's body and arms.

EMERGENCY CALL (SOS) BUTTON (if so equipped)

EMERGENCY SUPPORT

Basic information

NissanConnect® Services provide various services to support dealing with emergencies of the subscribed vehicle and the driver.

For example, in case of an illness or serious injury, you can seek support by pushing the in-vehicle Emergency Call (SOS) button and connecting to the NissanConnect® Services Response Center. The NissanConnect® Services Response Center can specify the location of the vehicle via Global Navigation Satellite System (GNSS), and the information will be sent to the police or other agencies as needed.

For information about other NissanConnect® Services emergency support related services, contact the NissanConnect® Customer Support line at 1-855-426-6628 or refer to the NissanConnect® Services website www.nissanusa.com/connect (for U.S.) or www.nissan.ca/nissanconnect (English)/ www.nissan.ca/nissanconnect/fr (French) (for Canada).

For models with ProPILOT Assist 2.1:

After the vehicle is brought to an emergency stop, the vehicle is connected to the Emergency Call (SOS) service operator, who then requests relief from public institutions (police, fire department, medical institutions). See "Hands On Detection" (P.372) for more details of the ProPILOT Assist 2.1 features.

⚠ WARNING

- **Please note that the Automatic Collision Notification service and Emergency Call function cannot be used in the following conditions:**
  - **Emergency functions and services may not be available without a paid subscription to NissanConnect® Services.**
  - **The NissanConnect® Services network system is disabled.**
  - **The vehicle moves outside the service area where the TCU (Telematics Control Unit) is connected to the system.**
  - **The vehicle is outside the area where the cellular network service is receivable.**
  - **The vehicle is in a location with poor signal reception such as tunnels, underground parking garages, behind buildings or in mountainous areas.**
  - **The line is busy.**
  - **The TCU (Telematics Control Unit) or other systems of your vehicle are not working properly.**
  - **Emergency call may not be triggered on the severity of a collision and/or emergency.**
- **Automatic Collision Notification triggers a connection from the vehicle to the NissanConnect® Services Emergency Response Center when the vehicle has been involved in a collision and/or if the supplemental air bags have deployed.**
- **Park the vehicle in a safe location and set the parking brake before operating the Emergency Call (SOS) button.**
- **Only use this service in case of an emergency. There may be a penalty for inappropriate use of the service.**
- **Radio waves could adversely affect electric medical equipment. Individuals who use a pacemaker should contact the device manufacturer regarding any possible effects before using the system.**
- **The TCU (Telematics Control Unit) antenna is installed inside the upper central part of the instrument panel. An occupant should not get any closer to the antenna than specified by the pacemaker manufacturer. The radio waves from the TCU antenna may adversely affect the operation of the pacemaker while using the NissanConnect® Services.**
- **If the automatic emergency call has been triggered, it is recommended that you bring the vehicle to a NISSAN dealer. This is necessary because the automatic emergency call system needs to be reset to avoid any unintended emergency call being made.**

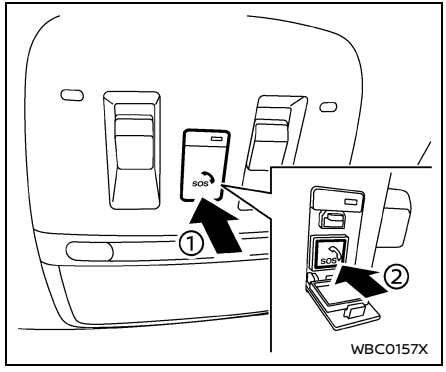

Making an emergency call

The Emergency Call (SOS) button is located near the map light.

1. Place the ignition switch in the ON position.
2. Push the cover ① to expose the Emergency Call (SOS) button ②.
3. Push the Emergency Call (SOS) button ② to make an emergency call.
4. When the line is connected, speak to the Response Specialist.

If you want to cancel the emergency call, push and hold the Emergency Call (SOS) button for a few seconds.

NOTE:

- **After the Emergency Call (SOS) button is pushed, it may take some time until the system initiates connection, depending on the technical environment and whether the TCU (Telematics Control Unit) is being used by other services.**
- **An indicator light on the Emergency Call (SOS) button shows the readiness of the emergency support system. If the indicator light is not illuminated, pushing the Emergency Call (SOS) button does not connect your vehicle to the Response Specialist.**
  The indicator light blinks while connected to the NissanConnect® Services Response Center.
- **Even when the indicator light is illuminated, connection to the NissanConnect® Services Response Center may not be possible. If this occurs in an emergency situation, contact the authorities by other means.**
- **To avoid disconnecting the line, keep the engine running during an emergency call, if it is safe to do so.**

CUP HOLDERS

Basic information

⚠ CAUTION

- **Avoid abrupt starting and braking when the cup holder is being used to prevent spilling the drink. If the liquid is hot, it can scald you or your passenger.**
- **Use only soft cups in the cup holder. Hard objects can injure you in an accident.**
- **Do not recline the rear seatback when you use the cup holders on the rear armrest. Doing so may cause the beverages to spill over, and if they are hot, they may scald the passengers.**

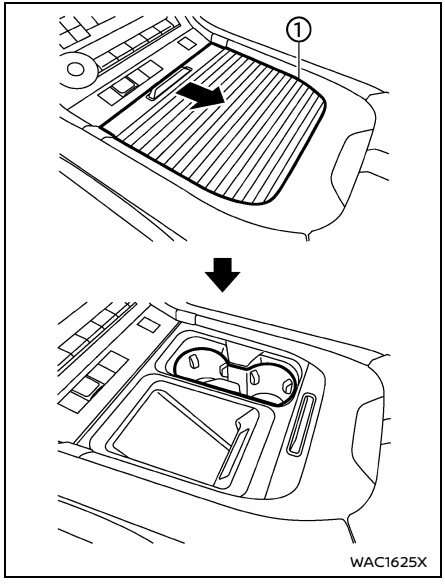

Front

To use the cup holder, slide the lid ①.
The cup holder is not designed to store personal items.

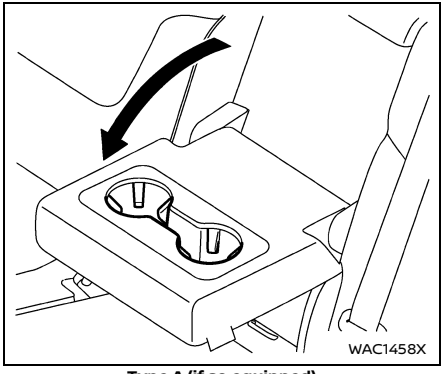

Type A (if so equipped)

2nd row seat

Type A:

To use the cup holder, pull down the 2nd row center seat backrest.

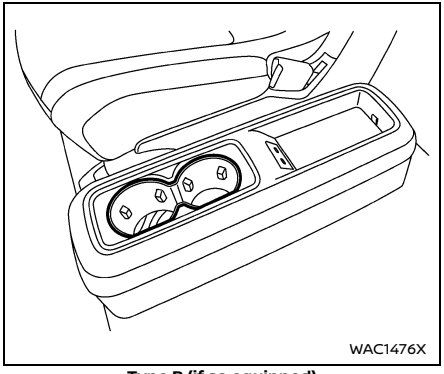

Type B (if so equipped)

Type B:

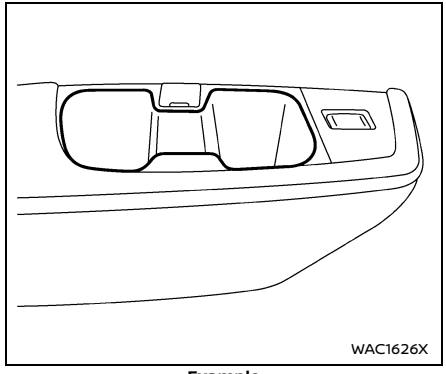

Example

3rd row seat

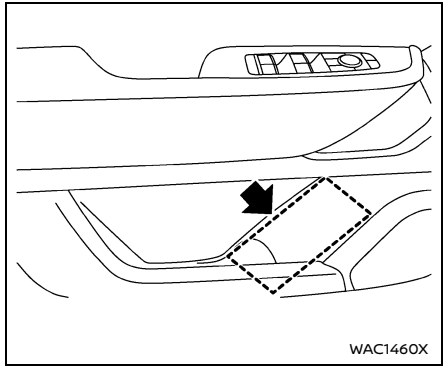

Soft bottle holder

CAUTION

- **Do not use bottle holder for any other objects that could be thrown about in the vehicle and possibly injure people during sudden braking or an accident.**
- **Do not use bottle holder for open liquid containers.**

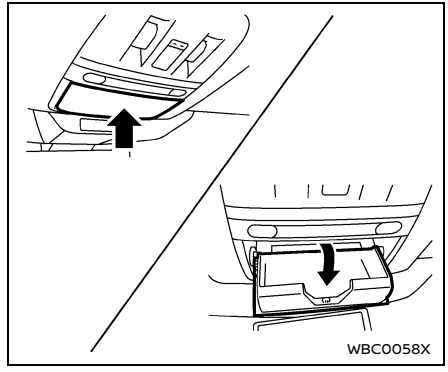

OVERHEAD CONSOLE

WARNING

Keep the overhead console closed while driving to avoid obstructing the driver's view and to help prevent an accident.

CAUTION

- **Do not use for anything other than sunglasses.**
- **Do not leave sunglasses in the overhead console while parking in direct sunlight. The heat may damage the sunglasses.**

To open the overhead console, push and release. Only store one pair of sunglasses in the console.

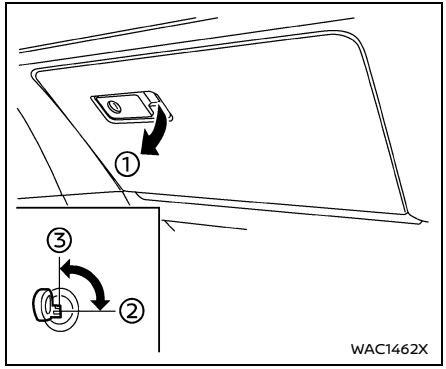

GLOVE BOX

⚠ WARNING

Keep glove box lid closed while driving to help prevent injury in an accident or a sudden stop.

To open the glove box, pull the handle ①.
To close, push the lid in until the lock latches.
To lock ②/unlock ③ the glove box, use the mechanical key. For the mechanical key usage, see "Keys" (P.195).

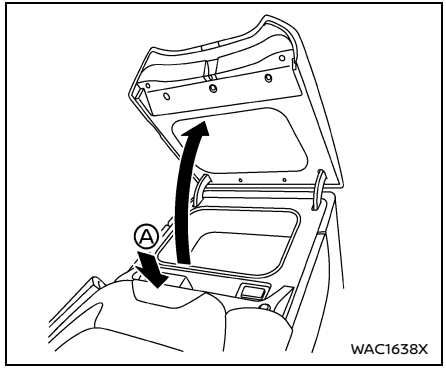

CONSOLE BOX

Front

To open the console box lid push the knob Ⓐ and pull up the lid.
To close, push the lid down until the lock latches.

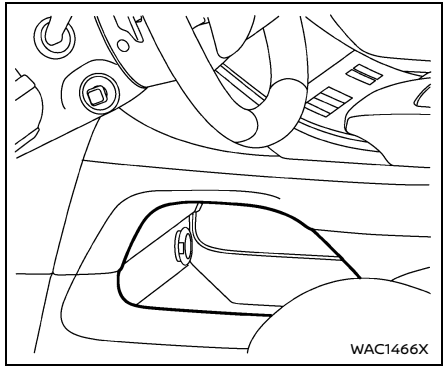

LOWER CONSOLE TRAY

CAUTION

Do not place any objects in lower console tray that could be thrown about in the vehicle and cause injury during sudden braking or collision.

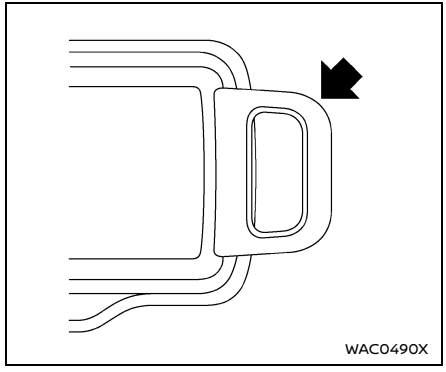

CARD HOLDER

Slide a card in the card holder.

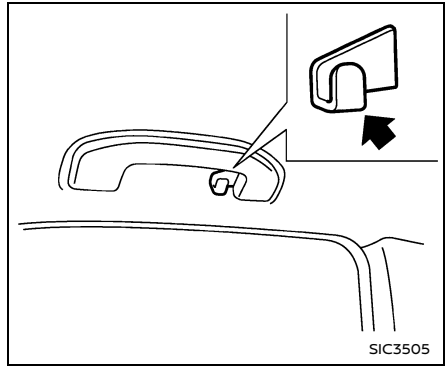

COAT HOOKS

The coat hook is located above the 2nd row side window.

CAUTION

Do not apply a total load of more than 2 lb (1 kg) to the hook.

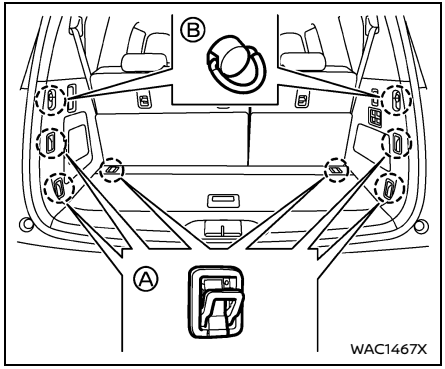

LUGGAGE HOOKS

WARNING

- **Always make sure that the cargo is properly secured. Use the suitable ropes and hooks.**
- **Unsecured cargo can become dangerous in an accident or sudden stop.**
- **Never allow anyone to ride in the luggage area. It is extremely dangerous to ride in a cargo area inside of a vehicle. In a collision, people riding in these areas are more likely to be seriously injured or killed.**
- **Do not allow people to ride in any area of your vehicle that is not equipped with seats and seat belts.**
- **The child restraint top tether strap may be damaged by contact with items in the cargo area. Secure any items in the cargo area. Your child could be seriously injured or killed in a collision if the top tether strap is damaged.**
- **Be sure everyone in your vehicle is in a seat and using a seat belt properly.**

CAUTION

Do not apply a total load of more than 22 lb (10 kg) Ⓐ or 7 lb (3 kg) Ⓑ to the hook.

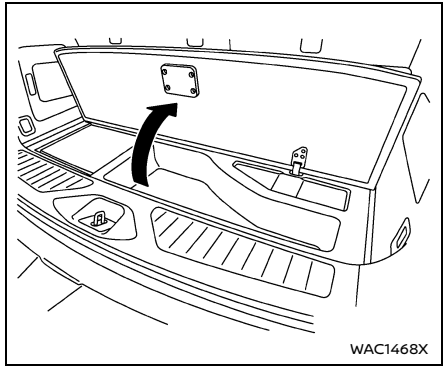

CARGO FLOOR BOX

Pull up the cargo floor board to use the cargo floor box.

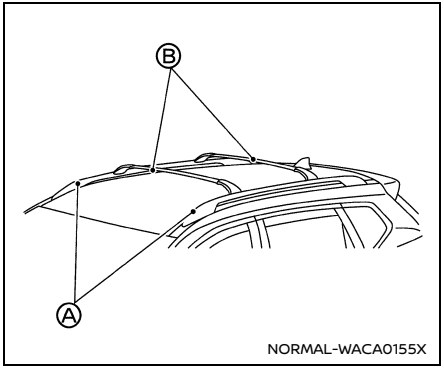

Example

ROOF RACK

Basic information

WARNING

- **Always install the cross bars onto the roof side rails before loading cargo of any kind. Loading cargo directly onto the roof side rails or the vehicle's roof may cause vehicle damage.**
- **Roof rack cross bars should be evenly distributed.**
- **Do not exceed maximum roof rack crossbars load capacity and always distribute the load uniformly.**
- **Heavy loading of the roof rack has the potential to affect the vehicle stability and handling during sudden or unusual handling maneuvers.**
- **Properly secure all cargo with ropes or straps to help prevent it from sliding or shifting. In a sudden stop or collision, unsecured cargo could cause personal injury.**
- **Drive extra carefully when the vehicle is loaded at or near the cargo carrying capacity, especially if the significant portion of that load is carried on the crossbars.**
- **When using the step, the door should be opened. There is a risk of falling off the step if you use the step with the door closed.**

CAUTION

- **Use care when placing or removing items from the roof rack. If you cannot comfortably lift the items onto the roof rack from the ground, use a ladder or a stool.**

Do not apply any load directly to the roof side rails Ⓐ. Cross bars Ⓑ (if so equipped) must be installed before applying load/cargo/luggage to the roof of the vehicle.

Genuine NISSAN accessory crossbars may be available through a NISSAN dealer. It is recommended that you visit a NISSAN dealer for additional information.

The service load capacity for the roof side rails is 221 lb (100 kg), however do not exceed the crossbars load capacity.

Be careful that your vehicle does not exceed the Gross Vehicle Weight Rating (GVWR) or its Gross Axle Weight Rating (GAWR front and rear).

For additional information regarding GVWR and GAWR, refer to "Vehicle loading information" (P.533).

- F.M.V.S.S. or C.M.V.S.S. certification label (located on the driver's door pillar).

Installing crossbars (if so equipped)

WARNING

- **It is recommended that you have the roof rack crossbars installed by a NISSAN dealer.**
- **Protect the painted area on the vehicle's roof under the crossbars by placing a piece of cloth under the cross bars to prevent scratch damage.**
- **Make sure the moonroof is in the closed position during the installation process.**

POWER WINDOWS

Basic information

⚠ WARNING

- **Make sure that all passengers have their hands, etc. inside the vehicle while it is in motion and before closing the windows. Use the window lock switch to prevent unexpected use of the power windows.**
- **To help avoid risk of injury or death through unintended operation of the vehicle and or its systems, including entrapment in windows or inadvertent door lock activation, do not leave children, people who require the assistance of others or pets unattended in your vehicle. Additionally, the temperature inside a closed vehicle on a warm day can quickly become high enough to cause a significant risk of injury or death to people and pets.**

The power windows operate when the ignition switch is in the ON position, or for a period of time after the ignition switch is placed in the OFF position. If the driver's or front passenger's door is opened during this period of time, power to the windows is canceled.

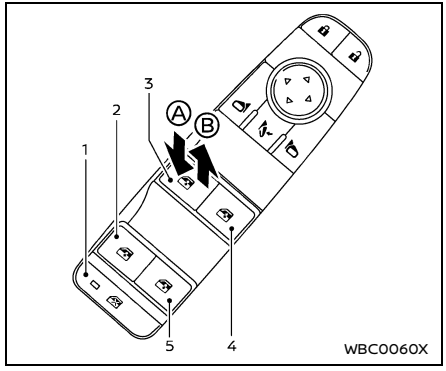

1. Window lock button
2. Rear left passenger side window
3. Driver side window
4. Front passenger side window
5. Rear right passenger side window

Main power window switch (driver's side)

To open or close the window, push down Ⓐ or pull up Ⓑ the switch and hold it. The main switch (driver side switches) will open or close all the windows.

Locking rear passenger's windows

When the window lock button is pushed (the indicator illuminates), the rear passenger's windows cannot be operated with the rear passenger's power window switch. The rear passenger's windows can only be operated with the main switch (driver side switches). To cancel the passenger's windows lock, push the window lock button again.

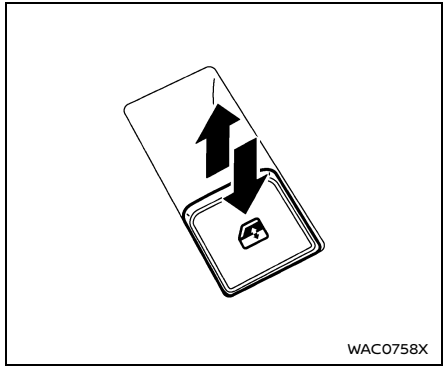
WAC0758X

Passenger side power window switch

The passenger's switch can control its corresponding window. When the window lock button on the driver's switch is pushed, the rear passenger's switch cannot be operated.

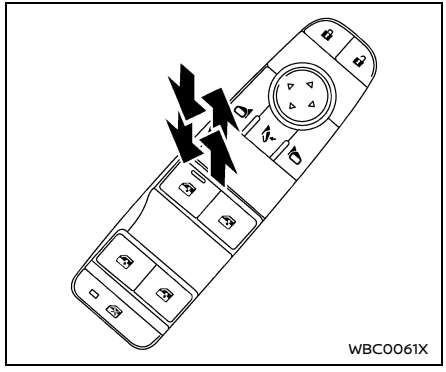
WBC0061X

Automatic operation

The automatic function enables a window to fully open or close without holding the switch down or up.

To fully open the window, push the power window switch down to the second detent and release the switch. To fully close the window, pull the power window switch up to the second detent and release the switch. The switch does not have to be held during window operation.

To stop the window open/close operation during the automatic function, push down or pull up the switch in opposite directions.

Auto-reverse function

⚠ WARNING

There are some small distances immediately before the closed position which cannot be detected. Make sure that all passengers have their hands, etc., inside the vehicle before closing the window.

The auto-reverse function enables a window to automatically reverse when something is caught in the window as it is closing by the automatic function. When the control unit detects an obstacle, the window will be lowered immediately.

Depending on the environment or driving conditions, the auto-reverse function may activate if an impact or load similar to something being caught in the window occurs.

Window timer:

The window timer allows the window switch to be operated for a short time even if the ignition switch is placed in the OFF position. The window timer will be cancelled when the driver's or front passenger's side door is opened or the preset time has expired.

When power window switch does not operate

If the power window automatic function does not operate properly, perform the following procedure to initialize the power win-

dow functions.

1. Close the door.
2. Place the ignition switch in the ON position.
3. Pull the power window switch and hold it to fully close the window.*1
4. Release the power window switch.
5. Pull the power window switch and hold it for approximately 5 seconds or more.*2
6. Push the power window switch down and hold it to fully open the window.
7. Release the power window switch.
8. Push the power window switch down and hold it for approximately 5 seconds or more.*2
9. Pull the power window switch and hold it to fully close the window.*1
10. Operate the window by the automatic function (window open and close) to confirm that the initialization is complete.

*1: If the window stops before reaching the fully closed position, release the switch, then pull and hold it again to fully close the window.

*2: After pulling or pushing the power window switch and holding it for approximately 5 seconds or more, the window will move again.

If the window cannot automatically be closed since the auto-reverse function activated due to a malfunction, perform the following procedure to cancel the auto-reverse function.

1. Pull the power window switch up until the auto-reverse function is activated, then the window will reverse automatically.
2. Repeat the procedure twice.
3. Pull the power window switch and hold it to close the window to confirm that the cancellation is completed.

⚠ WARNING

When the auto-reverse function is canceled, the window will not automatically reverse even if the control unit detects an obstacle. Make sure that all passengers have their hands, etc. inside the vehicle before closing the windows.

If the power window functions do not operate properly after performing the procedure above, have your vehicle checked. It is recommended that you visit a NISSAN dealer.

MOONROOF (if so equipped)

BASIC INFORMATION

⚠ WARNING

- **In an accident you could be thrown from the vehicle through an open moonroof. Always use seat belts and child restraints.**
- **Do not allow anyone to stand up or extend any portion of their body out of the moonroof opening while the vehicle is in motion or while the moonroof is closing.**

⚠ CAUTION

- **Remove water drops, snow, ice or sand from the moonroof before opening.**
- **Do not place any heavy object on the moonroof or surrounding area.**

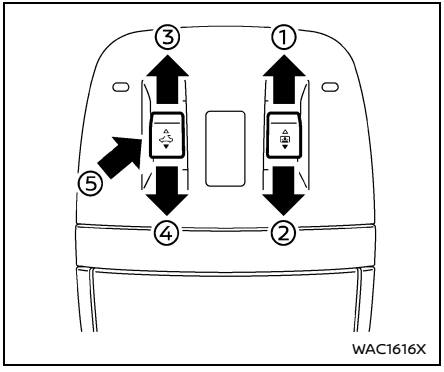

POWER MOONROOF AND SUNSHADE

Sliding sunshade and moonroof

When the sunshade switch is pushed to the OPEN position ①, the sunshade will open. (If the sunshade starts to open from the position between close and half open, the sunshade will be stopped at half position. When the switch is pushed again, the sunshade will open fully.) When the moonroof switch is pushed to the OPEN position ③, the moonroof opens to the comfort mode position. (If the sunshade is closed, the sunshade will be opened to the half position. When the switch is pushed again, the moonroof will open fully.)

When the moonroof switch is pushed to the CLOSE position ④, the moonroof will automatically close. When the sunshade switch is pushed to the CLOSE position ②, the sunshade will close.

To stop the sunshade or moonroof during the operation, push the moonroof switch to either the OPEN ①, ③, CLOSE ②, ④ or UP ⑤ position.

Tilting moonroof

To tilt up the moonroof, push the moonroof switch to the up position ⑤.

To tilt down the moonroof, push the switch again or push it to the CLOSE position ④.

Comfort mode

This is the position used when driving with the moonroof open. When driving with the moonroof fully open, wind noise may be very loud. Use the comfort mode position when driving.

Auto-reverse function

⚠ WARNING

There are some small distances just before the closed position which cannot be detected. Make sure that all passengers have their hands, etc. inside the vehicle before closing the moonroof and sunshade.

The auto-reverse function enables the moonroof and sunshade to automatically reverse when something is caught in the moonroof and sunshade as it is closing. When the control unit detects an obstacle, the moonroof and sunshade will open immediately.

Depending on the environment or driving conditions, the auto-reverse function may activate if an impact or load similar to something being caught in the moonroof and sunshade occurs.

If the auto-reverse function activates consecutively or the battery is discharged, the moonroof and sunshade may not close properly. In this case, push and hold the switch to the CLOSE position ④ to close the moonroof.

If the moonroof does not operate

If the moonroof and sunshade do not operate properly, perform the following procedure to initialize the operation system.

1. If the moonroof and sunshade are open, close them fully by repeatedly pushing the moonroof switch to the CLOSE ② and ④ position.
2. Push and hold the moonroof switch to the CLOSE position ④ for 10 seconds.
   The moonroof will be tilted up and the sunshade will close slightly and then stop.
3. Release the moonroof switch once, and immediately push the moonroof switch again and hold it to the CLOSE position ④.
   The moonroof and sunshade will move as follows:
   Sunshade fully open → moonroof tilt down → moonroof fully open → moonroof fully close → sunshade fully close

4. Release the moonroof switch after the moonroof and sunshade stopped.
5. Check if the moonroof switch operates normally.

⚠ WARNING

The driver is always responsible for operating the moonroof properly, including the operation by all passengers. Failure to follow the warnings and instructions for proper use of the moonroof could result in serious injury or death.

- **Do not allow children to operate the moonroof. Improper operation by children may cause an accident. If children or others get caught in the moonroof, it could cause serious injury.**
- **To help avoid risk of injury or death through unintended operation of the moonroof, place the ignition switch in the OFF position when leaving the vehicle, and do not leave children and the Intelligent Key inside the vehicle.**
- **Do not activate the auto-reverse function intentionally. If hands or face, etc. get caught in the moonroof, it could cause serious injury.**

⚠ CAUTION

- **Do not place objects (such as newspapers, handkerchiefs, etc.) on the sunshade when it is extending or retracting causing improper operation or damage to the sunshade.**
- **Do not push the sunshade arm with your hands, etc., as this may deform it. Improper operation or damage to the sunshade may result.**
- **Do not put any object into the sunshade inlet port as this may result in improper operation or damage the sunshade.**
- **Do not hang any object on the arm rail as this may result in improper operation or damage the sunshade.**
- **Do not forcefully pull the sunshade. Doing so may elongate the sunshade. Improper operation or damage to the sunshade may result.**

If the moonroof does not operate properly after performing the procedure above, have your vehicle checked by a NISSAN dealer.

INTERIOR LIGHTS

BASIC INFORMATION

⚠ CAUTION

- **Do not leave the light switch on when the engine is not running for extended periods of time to prevent the battery from being discharged.**
- **Turn off the lights when you leave the vehicle.**

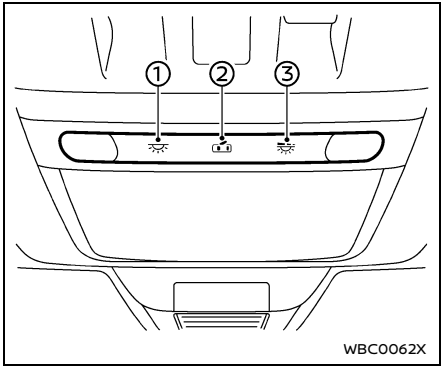

INTERIOR LIGHT SWITCH

① The interior lights can be turned ON regardless of door position. The lights will go off after a period of time unless the ignition switch is placed in the ON position when any door is opened.

② The interior lights can be set to operate when the doors are opened. To turn off the interior lights when a door is open, touch the switch, the interior lights will not illuminate, regardless of door position. The lights will go off when the ignition switch is placed in the ON position, or the driver's door is closed and locked.

③ The brightness of the map lights can be adjusted in 4 levels by touching this switch.

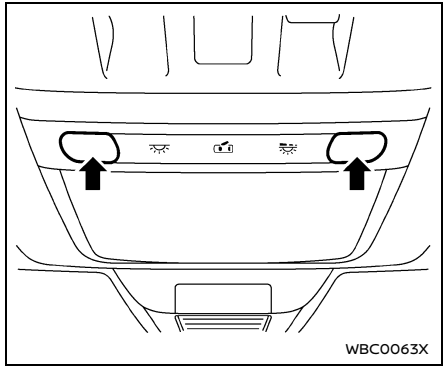

MAP LIGHTS

Touch the light to turn the map lights on. To turn the light off, touch the light again

The lights will also turn off after a period of time when the lights remain illuminated during engine off, to prevent the battery from becoming discharged.

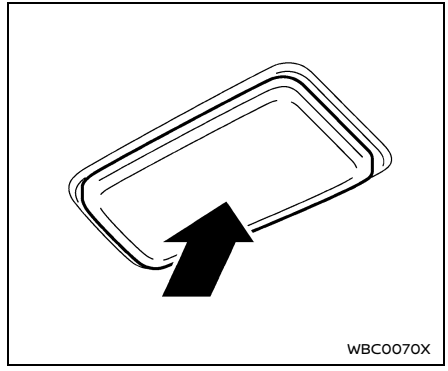

REAR PERSONAL LIGHTS

To turn the rear personal light on, touch the light. Touch the light again to dim the light. To turn off the light, touch the light once again.

The lights will also turn off after a period of time when the lights remain illuminated during engine off, to prevent the battery from becoming discharged.

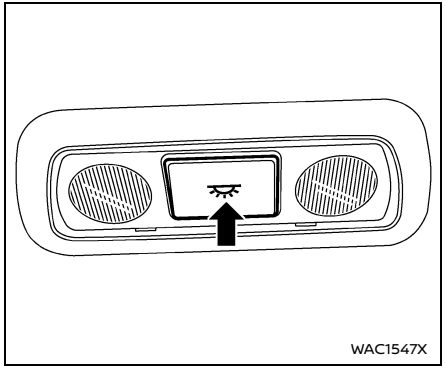
WAC1547X

REAR ROOM LIGHT

To turn on the rear room light, push the switch.

To turn off the rear room light, push the switch again.

The light will turn off after a period of time when the light remains illuminated during engine off, to prevent the battery from becoming discharged.

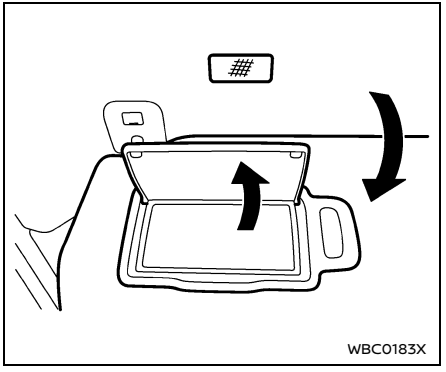
WBC0183X

VANITY MIRROR LIGHT

The light over the vanity mirror will turn on when the cover on the vanity mirror is opened.

When the cover is closed, the light will turn off.

The lights will also turn off after a period of time when the lights remain illuminated during engine off, to prevent the battery from becoming discharged.

CARGO LIGHT

The cargo light illuminates when the liftgate is opened.

The light will turn off after a period of time when the light remains illuminated during engine off, to prevent the battery from becoming discharged.

HomeLink® UNIVERSAL TRANSCEIVER (if so equipped)

BASIC INFORMATION

The HomeLink® Universal Transceiver provides a convenient way to consolidate the functions of up to three individual hand-held transmitters into one built-in device.

HomeLink® Universal Transceiver:

- Will operate most Radio Frequency (RF) devices such as garage doors, gates, home and office lighting, entry door locks and security systems.
- Is powered by your vehicle's battery. No separate batteries are required. If the vehicle's battery is discharged or is disconnected, HomeLink® will retain all programming.

When the HomeLink® Universal Transceiver is programmed, retain the original transmitter for future programming procedures (Example: new vehicle purchases). Upon sale of the vehicle, the programmed HomeLink® Universal Transceiver buttons should be erased for security purposes. For additional information, refer to "Programming HomeLink®" (P.189).

⚠ WARNING

- **Do not use the HomeLink® Universal Transceiver with any garage door opener that lacks safety stop and reverse features as required by federal safety standards. (These standards became effective for opener models manufactured after April 1, 1982.) A garage door opener which cannot detect an object in the path of a closing garage door and then automatically stop and reverse, does not meet current federal safety standards. Using a garage door opener without these features increases the risk of serious injury or death.**
- **During the programming procedure your garage door or security gate will open and close (if the transmitter is within range). Make sure that people or objects are clear of the garage door, gate, etc. that you are programming.**
- **Your vehicle's engine should be turned off while programming the HomeLink® Universal Transceiver. Do not breathe exhaust gases; they contain colorless and odorless carbon monoxide. Carbon monoxide is dangerous. It can cause unconsciousness or death.**

PROGRAMMING HomeLink®

The following steps show generic instructions how to program a HomeLink® button. If you have any questions or are having difficulty programming your HomeLink® buttons, refer to the HomeLink® web site at: www.homelink.com/nissan or call 1-800-355-3515.

NOTE:
It is also recommended that a new battery be placed in the hand-held transmitter of the device being programmed to HomeLink® for quicker programming and accurate transmission of the radio-frequency.

1. Position the end of your hand-held transmitter 1-3 in (26-76 mm) away from the HomeLink® surface, keeping the HomeLink® indicator light ① in view.

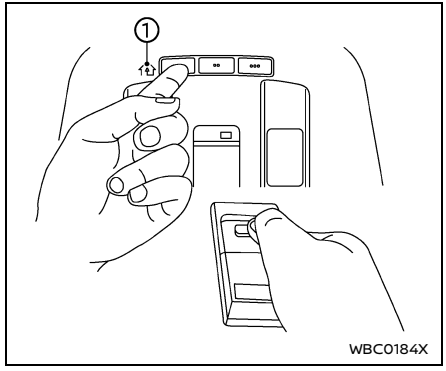

2. Using both hands, simultaneously press and hold the desired HomeLink® button and handheld transmitter button. DO NOT release until the HomeLink® indicator light ① flashes slowly and then rapidly. When the indicator light flashes rapidly, both buttons may be released. (The rapid flashing indicates successful programming.)

NOTE:
Some devices to be programmed may require you to replace Step 2 with the cycling procedure noted in the "Programming HomeLink® for Canadian customers and gate openers" (P.190).

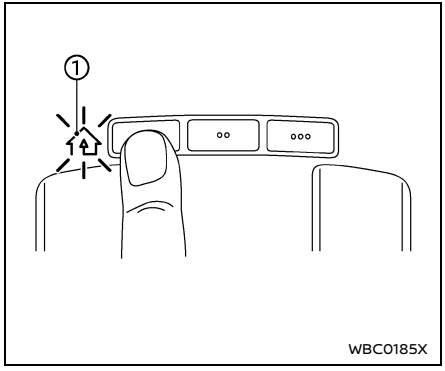

3. Press and hold the programmed HomeLink® button and observe the indicator light.
   - If the indicator light 1 is solid/continuous, programming is complete and your device should activate when the HomeLink® button is pressed and released.
   - If the indicator light 1 blinks rapidly for two seconds and then turns to a solid/continuous light, continue with Steps 4-6 for a rolling code device. A second person may make the following steps easier. Use a ladder or other device. Do not stand on your vehicle to perform the next steps.
4. At the receiver located on the garage door opener motor in the garage, locate the "learn" or "smart" button (the name and color of the button may vary by manufacturer but it is usually located near where the hanging antenna wire is attached to the unit). If there is difficulty locating the button, reference the garage door opener's manual.
5. Press and release the "learn" or "smart" button.

NOTE:
Once the button is pressed, you have approximately 30 seconds to initiate the next step.

6. Return to the vehicle and firmly press and hold the programmed HomeLink® button for two seconds and release. Repeat the "press/hold/release" sequence up to 3 times to complete the programming process. HomeLink® should now activate your rolling code equipped device.
7. If you have any questions or are having difficulty programming your HomeLink® buttons, refer to the HomeLink® web site at: www.homelink.com/nissan or call 1-800-355-3515.

PROGRAMMING HomeLink® FOR CANADIAN CUSTOMERS AND GATE OPENERS

Canadian radio-frequency laws require transmitter signals to "time-out" (or quit) after several seconds of transmission – which may not be long enough for HomeLink® to pick up the signal during programming. Similar to this Canadian law, some U.S. gate operators are designed to "time-out" in the same manner.

If you live in Canada or you are having difficulties programming a gate operator or garage door opener by using the "Programming HomeLink®" procedures, replace "Programming HomeLink®" Step 2 with the following:

NOTE:
When programming a garage door opener, etc., unplug the device during the "cycling" process to prevent possible damage to the garage door opener components.

Step 2: Using both hands, simultaneously press and hold the desired HomeLink® button and the hand-held transmitter button. During programming, your hand-held transmitter may automatically stop transmitting. Continue to press and hold the desired HomeLink® button while you press and repress ("cycle") your hand-held transmitter every two seconds until the frequency signal has been learned. The HomeLink® indicator light will flash slowly and then rapidly after several seconds upon successful programming. **DO NOT** release until the HomeLink® indicator light flashes slowly and then rapidly. When the indicator light flashes rapidly, both buttons may be released. The rapid flashing indicates successful programming.

Proceed with "Programming HomeLink®" step 3 to complete.

Remember to plug the device back in when programming is completed.

OPERATING THE HomeLink® UNIVERSAL TRANSCEIVER

The HomeLink® Universal Transceiver, after it is programmed, can be used to activate the programmed device. To operate, simply press and release the appropriate programmed HomeLink® Universal Transceiver button. The amber indicator light will illuminate while the signal is being transmitted.

For convenience, the hand-held transmitter of the device may also be used at any time.

PROGRAMMING TROUBLE-SHOOTING

If the HomeLink® does not quickly learn the hand-held transmitter information:

- replace the hand-held transmitter batteries with new batteries.
- position the hand-held transmitter with its battery area facing away from the HomeLink® surface.
- press and hold both the HomeLink® and hand-held transmitter buttons without interruption.
- position the hand-held transmitter 1-3 in (26-76 mm) away from the HomeLink® surface. Hold the transmitter in that position for up to 15 seconds. If HomeLink® is not programmed within that time, try holding the transmitter in another position - keeping the indicator light in view at all times.

If you have any questions or are having difficulty programming your HomeLink® buttons, refer to the HomeLink® web site at: www.homelink.com/nissan or 1-800-355-3515.

CLEARING THE PROGRAMMED INFORMATION

Basic information

The following procedure clears the programmed information from both buttons. Individual buttons cannot be cleared. However, individual buttons can be reprogrammed, see "Reprogramming a single HomeLink® button" (P.191).

To clear all programming

1. Press and hold the two outer HomeLink® buttons until the indicator light begins to flash in approximately 10 seconds. Do not hold for longer than 20 seconds.
2. Release both buttons.

HomeLink® is now in the programming mode and can be programmed at any time beginning with "Programming HomeLink®" - Step 1.

REPROGRAMMING A SINGLE HomeLink® BUTTON

To reprogram a HomeLink® Universal Transceiver button, complete the following.

1. Press and hold the desired HomeLink® button. **Do not** release the button.
2. The indicator light will begin to flash after 20 seconds. Without releasing the HomeLink® button, proceed with "Programming HomeLink®" - Step 1.

For questions or comments, contact HomeLink® at: www.homelink.com/nissan or 1-800-355-3515.

The HomeLink® Universal Transceiver button has now been reprogrammed. The new device can be activated by pushing the HomeLink® button that was just programmed. This procedure will not affect any other programmed HomeLink® buttons.

IF YOUR VEHICLE IS STOLEN

If your vehicle is stolen, you should change the codes of any non-rolling code device that has been programmed into HomeLink®. Consult the Owner's Manual of each device or call the manufacturer or dealer of those devices for additional information.

When your vehicle is recovered, you will need to reprogram the HomeLink® Universal Transceiver with your new transmitter information.

NOTE:
FCC Notice:
For USA:
This device complies with Part 15 of the FCC Rules. Operation is subject to the following two conditions: (1) this device may not cause harmful interference, and (2) this device must accept any interference received, including interference that may cause undesired operation.

NOTE:
Changes or modifications not expressly approved by the party responsible for compliance could void the user's authority to operate the equipment.
For Canada:
This device contains licence-exempt transmitter(s)/receiver(s) that comply with Innovation, Science and Economic Development Canada's licence-exempt RSS(s). Operation is subject to the following two conditions: (1) This device may not cause interference. (2) This device must accept any interference, including interference that may cause undesired operation of the device.

3 Pre-driving checks and adjustments

Keys 195
- Intelligent Key 195
- Valet hand-off 196

Doors 196
- Basic information 196
- Locking with key 197
- Locking with inside lock knob 197
- Unlocking with inside handle 197
- Locking with power door lock switch 198
- Automatic door locks 198
- Child safety rear door lock 199

Intelligent Key system 199
- Basic information 199
- Intelligent Key operating range 201
- Door locks/unlocks precaution 201
- Intelligent Key operation 202
- Walk away lock function 203
- Approach unlock function 203
- Battery saver system 204
- Warning lights and audible reminders 204
- Troubleshooting guide 204
- How to use remote keyless entry function 205

Remote engine start 209
- Basic information 209
- Remote engine start operating range 209
- Remote starting the engine 209
- Canceling a remote engine start 210
- Conditions the remote engine start will not work 210

Hood 211

Liftgate 211
- Basic information 211
- Operating manual liftgate (if so equipped) 212
- Operating power liftgate (if so equipped) 212
- Motion-activated liftgate (if so equipped) 215
- Garage mode system (if so equipped) 215
- Auto closure 216
- Liftgate release lever 216

Front, side and rear unique parts (NISMO models) 217

Fuel-filler door 218
- Basic information 218
- Opening the fuel-filler door 218
- How to refuel 219
- When refueling from a portable fuel container 220

Steering wheel 220
- Basic information 220
- Manual operation (if so equipped) 221
- Power operation (if so equipped) 221

Sun visors 221
Assist grips 222
Mirrors 222
Inside mirror 222
Outside mirrors 230
Vanity mirror 232
Memory seat (if so equipped) 233
Basic information 233
Memory storage function 233
Linking the profiled user function to a stored memory position 234
Setting memory function 234
System operation 234

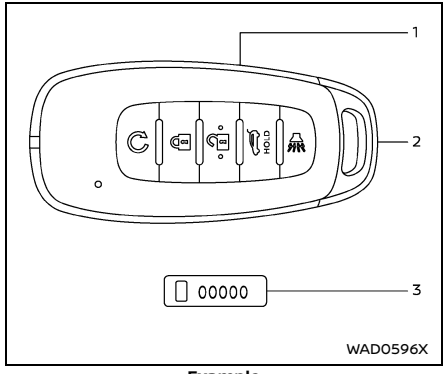

Example

1. Intelligent Key (2 sets)
2. Mechanical key (inside Intelligent Key) (2 sets)
3. Key number plate

INTELLIGENT KEY

Basic information

Your vehicle can only be driven with the Intelligent Keys which are registered to your vehicle's Intelligent Key system components and NISSAN Vehicle Immobilizer System components. As many as 4 Intelligent Keys can be registered and used with one vehicle. The new keys must be registered by a NISSAN dealer prior to use with the Intelligent Key system and NISSAN Vehicle Immobilizer System of your vehicle. Since the registration process requires erasing all memory in the Intelligent Key components when registering new keys, be sure to take all Intelligent Keys that you have to the NISSAN dealer.

A key number plate is supplied with your keys. Record the key number and keep it in a safe place (such as your wallet), not in the vehicle. If you lose your keys, it is recommended you visit a NISSAN dealer for duplicates by using the key number. NISSAN does not record any key numbers so it is very important to keep track of your key number plate.

A key number is only necessary when you have lost all keys and do not have one to duplicate from. If you still have a key, it can be duplicated without knowing the key number.

⚠ CAUTION

- **Be sure to carry the Intelligent Key with you when driving. The Intelligent Key is a precision device with a built-in transmitter. To avoid damaging it, please note the following.**
  - **The Intelligent Key is water resistant; however, wetting may damage the Intelligent Key. If the Intelligent Key gets wet, immediately wipe until it is completely dry.**
  - **Do not bend, drop or strike it against another object.**
  - **If the outside temperature is below 14°F (-10°C) degrees, the battery of the Intelligent Key may not function properly.**
  - **Do not place the Intelligent Key for an extended period in a place where temperatures exceed 140°F (60°C).**
  - **Do not change or modify the Intelligent Key.**
  - **Do not use a magnet key holder.**
  - **Do not place the Intelligent Key near an electric appliance such as a television set, personal computer or cellular phone.**
  - **Do not allow the Intelligent Key to come into contact with water or salt water, and do not wash it in a washing machine. This could affect the system function.**

If an Intelligent Key is lost or stolen, NISSAN recommends erasing the ID code of that Intelligent Key. This will prevent the Intelligent Key from unauthorized use to unlock the vehicle. For information regarding the erasing procedure, it is recommended you visit a NISSAN dealer.

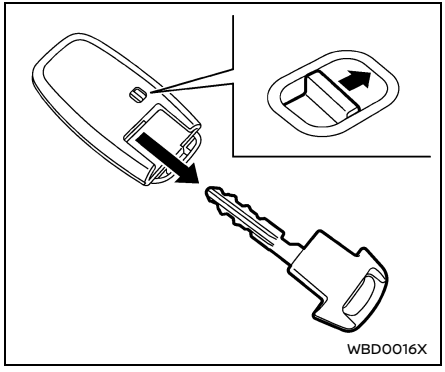

Mechanical key

To remove the mechanical key, release the lock knob at the back of the Intelligent Key.

To install the mechanical key, firmly insert it into the Intelligent Key until the lock knob returns to the lock position.

Use the mechanical key to lock or unlock the driver's door. (See "Doors" (P.196).)

⚠ CAUTION

Always carry the mechanical key installed in the Intelligent Key.

VALET HAND-OFF

When you have to leave a key with a valet, give them the Intelligent Key itself and keep the mechanical key with you to protect your belongings.

To prevent the glove box from being opened during valet hand-off, follow the procedures below.

1. Remove the mechanical key from the Intelligent Key.
2. Lock the glove box with the mechanical key.
3. Hand the Intelligent Key to the valet, keeping the mechanical key in your pocket or bag for insertion into the Intelligent Key when you retrieve your vehicle.

See "Glove box" (P.178).

BASIC INFORMATION

⚠ WARNING

- **Always have the doors locked while driving. Along with the use of seat belts, this provides greater safety in the event of an accident by helping to prevent persons from being thrown from the vehicle. This also helps keep children and others from unintentionally opening the doors, and will help keep out intruders.**
- **Before opening any door, always look for and avoid oncoming traffic.**
- **To help avoid risk of injury or death through unintended operation of the vehicle and or its systems, including entrapment in windows or inadvertent door lock activation, do not leave children, people who require the assistance of others or pets unattended in your vehicle. Additionally, the temperature inside a closed vehicle on a warm day can quickly become high enough to cause a significant risk of injury or death to people and pets.**

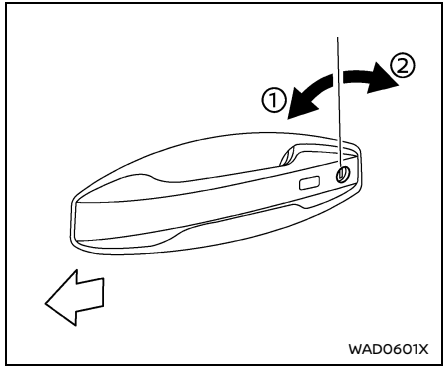

LOCKING WITH KEY

To lock the driver's door, insert the key to the door key cylinder and turn the key to the rear side of the vehicle ②.

To unlock the driver's door, turn the key to the front side of the vehicle ①.

To unlock the other doors, see "Locking with power door lock switch" (P.198), "Intelligent Key system" (P.199) or "How to use remote keyless entry function" (P.205).

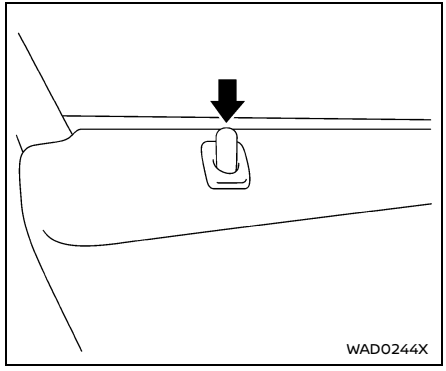

LOCKING WITH INSIDE LOCK KNOB

To lock the door, push down the inside lock knob.

Be sure not to leave the Intelligent Key inside the vehicle.

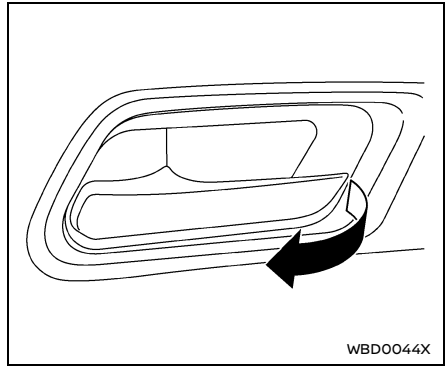

UNLOCKING WITH INSIDE HANDLE

To unlock and open the door, pull once on the door handle to unlock it, and again to open it.

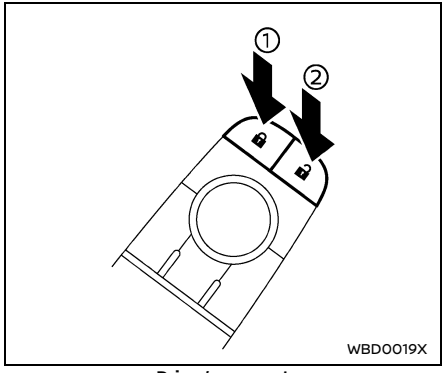

Driver's armrest

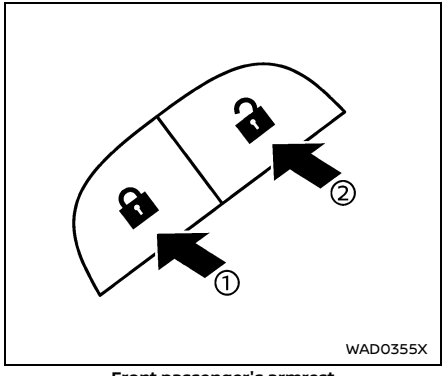

Front passenger's armrest

LOCKING WITH POWER DOOR LOCK SWITCH

Basic information

Operating the power door lock switch (located on the driver's and front passenger's doors) will lock or unlock all the doors.

To lock the doors, push the power door lock switch to the lock position ① with the driver's and front passenger's doors open, then close the door.

When locking the door this way, be sure not to leave the key inside the vehicle.

To unlock the doors, push the power door lock switch to the unlock position ②.

Lockout protection

To prevent the Intelligent Key from being accidentally locked in the vehicle, lockout protection is equipped with the Intelligent Key system.

When any door is open, the doors are locked, and then the Intelligent Key is put inside the vehicle and all the doors are closed; a chime will sound and the lock will automatically unlock.

NOTE:
The doors may not lock when the Intelligent Key is in the same hand that is operating the door handle request switch to lock the door. Put the Intelligent Key in a purse, pocket or your other hand.

⚠ CAUTION

The lockout protection may not function under the following conditions:

- **When the Intelligent Key is placed on top of the instrument panel.**
- **When the Intelligent Key is placed inside the glove box.**
- **When the Intelligent Key is placed inside the door pockets.**
- **When the Intelligent Key is placed inside or near metallic materials.**

AUTOMATIC DOOR LOCKS

- All doors lock automatically when the vehicle speed reaches 15 MPH (24 km/h).
- All doors unlock automatically when the ignition switch is placed in the OFF position or when the shift position is placed in the P (Park) position, if selected.

NOTE:
The Automatic door unlock feature can be changed using the "Vehicle Settings" menu on the vehicle information display. (See "Vehicle Settings" (P.115).)

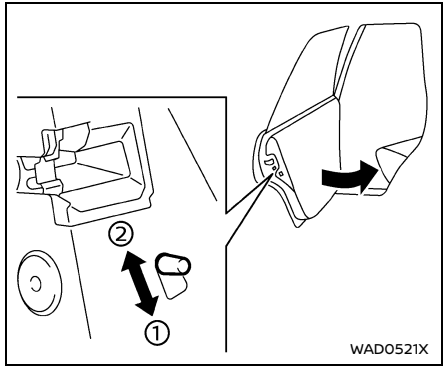

CHILD SAFETY REAR DOOR LOCK

Child safety rear door locks help prevent doors from being opened accidentally, especially when small children are in the vehicle.

When the levers are in the lock position ①, the rear doors can be opened only from the outside.

To disengage, move the levers to the unlock position ②.

BASIC INFORMATION

⚠ WARNING

- **Radio waves could adversely affect electric medical equipment. Those who use a pacemaker should contact the electric medical equipment manufacturer for the possible influences before use.**
- **The Intelligent Key transmits radio waves when the buttons are pushed. The FAA advises that the radio waves may affect aircraft navigation and communication systems. Do not operate the Intelligent Key while on an airplane. Make sure the buttons are not operated unintentionally when the unit is stored during a flight.**

The Intelligent Key system can operate all the door locks using the remote controller function or pushing the request switch on the vehicle without taking the key out from a pocket or purse. The operating environment and/or conditions may affect the Intelligent Key system operation.

Be sure to read the following before using the Intelligent Key system.

⚠ CAUTION

- **Be sure to carry the Intelligent Key with you when operating the vehicle.**
- **Never leave the Intelligent Key in the vehicle when you leave the vehicle.**

The Intelligent Key is always communicating with the vehicle as it receives radio waves. The Intelligent Key system transmits weak radio waves. Environmental conditions may interfere with the operation of the Intelligent Key system under the following operating conditions.

- When operating near a location where strong radio waves/noises are transmitted, such as a TV tower, power station and broadcasting station.
- When in possession of wireless equipment, such as a cellular phone, transceiver, and CB radio.
- When the Intelligent Key is in contact with or covered by metallic materials.
- When any type of radio wave remote control is used nearby.
- When the Intelligent Key is placed near an electric appliance such as a personal computer.
- When the vehicle is parked near a parking meter.

In such cases, correct the operating conditions before using the Intelligent Key function or use the mechanical key.

Although the life of the battery varies depending on the operating conditions, the battery's life is approximately 2 years. If the battery is discharged, replace it with a new one.

When the Intelligent Key battery is low, a warning appears in the vehicle information display. (See "Key Battery Low warning" (P.121).)

Since the Intelligent Key is continuously receiving radio waves, if the key is left near equipment which transmits strong radio waves/noises, such as signals from a TV and personal computer, the battery life may become shorter.

For information regarding replacement of a battery, see "Intelligent Key battery replacement" (P.486).

As many as 4 Intelligent Keys can be registered and used with one vehicle. For information about the purchase and use of additional Intelligent Keys, it is recommended that you contact a NISSAN dealer.

⚠ CAUTION

- **Do not allow the Intelligent Key, which contains electrical components, to come into contact with water or salt water. This could affect the system function.**
- **Do not drop the Intelligent Key.**
- **Do not strike the Intelligent Key sharply against another object.**
- **Do not change or modify the Intelligent Key.**
- **Wetting may damage the Intelligent Key. If the Intelligent Key gets wet, immediately wipe until it is completely dry.**
- **If the outside temperature is below 14°F (–10°C) degrees, the battery of the Intelligent Key may not function properly.**
- **Do not place the Intelligent Key for an extended period in an area where temperatures exceed 140°F (60°C).**
- **Do not attach the Intelligent Key with a key holder that contains a magnet.**
- **Do not place the Intelligent Key near equipment that produces a magnetic field, such as a TV, audio equipment, personal computers, cellular phone or wireless charger (if so equipped).**

If an Intelligent Key is lost or stolen, NISSAN recommends erasing the ID code of that Intelligent Key from the vehicle. This may prevent the unauthorized use of the Intelligent Key to operate the vehicle. For information regarding the erasing procedure, it is recommended that you contact a NISSAN dealer.

The Intelligent Key function can be disabled. For information about disabling the Intelligent Key function, it is recommended that you contact a NISSAN dealer.

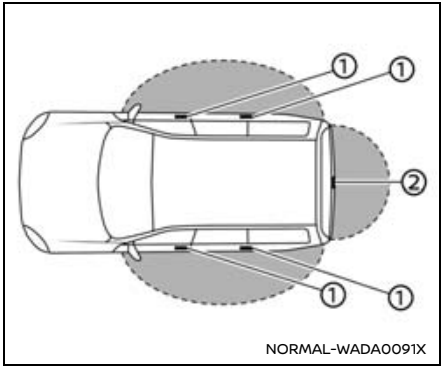

NORMAL-WADA0091X

INTELLIGENT KEY OPERATING RANGE

The Intelligent Key functions can only be used when the Intelligent Key is within the specified operating range from the request switch ① and ② (if so equipped).

When the Intelligent Key battery is discharged or strong radio waves/noises are present near the operating location, the Intelligent Key system's operating range becomes narrower, and the Intelligent Key may not function properly.

The operating range is within 80 cm (31.50 in) from each request switch ① ②.

If the Intelligent Key is too close to the door glass or handle, the request switch may not function.

When the Intelligent Key is within the operating range, it is possible for anyone who does not carry the Intelligent Key to push the request switch to lock or unlock the doors.

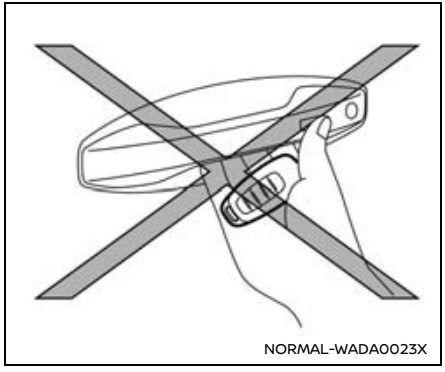
NORMAL-WADA0023X

DOOR LOCKS/UNLOCKS PRECAUTION

- Do not push the door handle request switch with the Intelligent Key held in your hand as illustrated. The close distance to the door handle will cause the Intelligent Key system to have difficulty recognizing that the Intelligent Key is outside the vehicle.
- After locking with the door handle request switch, verify the doors are securely locked by testing them.
- To prevent the Intelligent Key from being left inside the vehicle, make sure you carry the key with you and then lock the doors.
- Do not pull the door handle before pushing the door handle request switch.

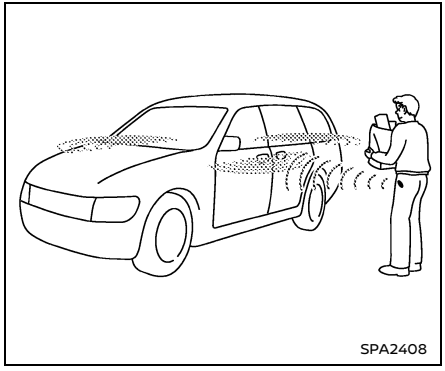

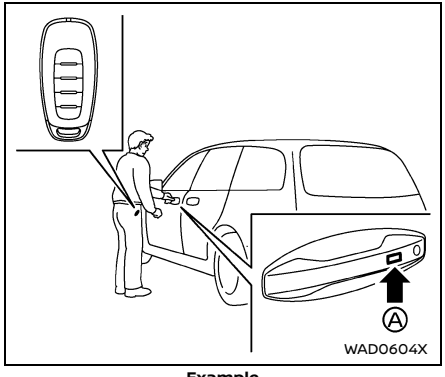

Example

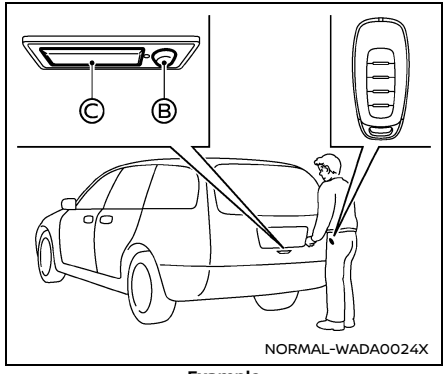

Example

INTELLIGENT KEY OPERATION

You can lock or unlock the doors without taking the key out from your pocket or bag.

When you carry the Intelligent Key with you, you can lock or unlock all doors by pushing the door handle request switch Ⓐ (located on the front and rear doors) or liftgate request switch Ⓑ (if so equipped) within the range of operation.

When you lock or unlock the doors, the hazard indicator will flash and the outside chime will sound as a confirmation.

Welcome light function

- When you unlock the doors, the parking lights, tail lights and the license plate lights will illuminate for a period of time.
- With the doors locked and when approaching the vehicle with the Intelligent Key, the parking lights, tail lights and license plate lights illuminate. (If you approach the vehicle several times without unlocking the door, the light may not illuminate to prevent unintended activation of the function.)
- The welcome light function can be disabled. For information about disabling the welcome light function, see "Vehicle Settings" (P.115).

Locking doors

1. Push the park button to engage the P (Park) position. Place the ignition switch in the OFF position and make sure you carry the Intelligent Key with you.
2. Close all doors.
3. Push the door handle request switch Ⓐ or the liftgate request switch Ⓑ (if so equipped) while carrying the Intelligent Key with you.
4. All doors and the liftgate will lock.
5. The hazard indicator flashes twice and the outside buzzer sounds twice.

NOTE:

- **Request switches can be deactivated when the "Ext. Door Switch" is turned off in the Vehicle Settings of the vehicle information display. For additional information, see "Vehicle Settings" (P.115).**
- **Doors lock with the door handle request switch while the ignition switch is not in the OFF position.**

- **Doors do not lock by pushing the driver's door handle request switch while the driver's door is open. However, doors lock with the mechanical key even if any door is open.**
- **Doors do not lock with the door handle request switch with the Intelligent Key inside the vehicle and a beep sounds to warn you. However, when an Intelligent Key is inside the vehicle, doors can be locked with another Intelligent Key.**

⚠ CAUTION

- **After locking the doors using the request switch, make sure that the doors have been securely locked by operating the door handles.**
- **When locking the doors using the request switch, make sure to have the Intelligent Key in your possession before operating the request switch to prevent the Intelligent Key from being left in the vehicle.**
- **The request switch is operational only when the Intelligent Key has been detected by the Intelligent Key system.**

Unlocking doors

1. Push the door handle request switch Ⓐ or the liftgate request switch Ⓑ (if so equipped) while carrying the Intelligent Key with you.
2. The hazard indicator flashes once and outside chime sounds once.
   - When the driver's door handle request switch or the liftgate request switch (if so equipped) is pushed:
     The driver's door or the liftgate will unlock.
   - When the front or rear passenger's door handle request switch is pushed:
     All doors and the liftgate will unlock.
3. Push the driver's door handle request switch or the liftgate request switch (if so equipped) again within 1 minute.
4. The hazard indicator flashes once and outside chime sounds once again. All the doors and the liftgate will unlock.

All doors will be locked automatically unless one of the following operations is performed within 1 minute after pushing the request switch while the doors are locked.

- Opening any door.
- Pushing the ignition switch.

During this 1-minute time period, if the UNLOCK button on the Intelligent Key is pushed, all doors will be locked automatically after another 1 minute.

NOTE:
The unlocking operation can be changed in "Selective Unlock" under the Vehicle Settings of the vehicle information display. For additional information, see "Vehicle Settings" (P.115).

Opening liftgate

1. Carry the Intelligent Key.
2. Push the liftgate opener switch Ⓒ.
3. The liftgate will unlock and then open.

WALK AWAY LOCK FUNCTION

When you walk away from the vehicle with the Intelligent Key, the vehicle will be locked automatically by the walk away lock function (the operation range is around 7 ft (2 m)). This function is disabled by the default setting. You can enable this function by the vehicle information display. For additional information, see "Vehicle Settings" (P.115).

NOTE:
- **When the doors are locked by the walk away lock function, the hazard indicator flashes twice. Be sure to confirm the door locks before you leave the vehicle.**
- **The walk away lock function may not operate under the following conditions:**
  - **When the door(s) and/or the liftgate are not closed securely.**
  - **When the engine is running.**
  - **When the Intelligent Key is placed inside of the vehicle.**
  - **When you place the Intelligent Key outside of the vehicle for a period of time. (When a door is opened and closed, the walk away lock function will be reactivated.)**

APPROACH UNLOCK FUNCTION

When you approach the vehicle with the Intelligent Key, the vehicle will be unlocked

automatically by the approach unlock function (the operation range is around 3 ft (1 m)). This function is disabled by the default setting. You can enable this function by the vehicle information display. For additional information, see "Vehicle Settings" (P.115).

NOTE:

- **When you approach the vehicle from the front, the approach unlock function may not operate unless you get close to the door.**
- **The approach unlock function may not operate under the following conditions:**
  - **When the Intelligent Key is placed inside of the vehicle.**
  - **When you place the Intelligent Key outside of the vehicle for a period of time. (When a door is unlocked and locked, the approach unlock function will be reactivated.)**
  - **When the engine is running (except the remote engine start function is performed).**
  - **When 8 days have passed since the vehicle was locked.**
  - **When you lock the vehicle with the power door lock switch.**
- **When both the approach unlock function and the selective unlock function are turned on, only the driver's door will be unlocked when you approach the vehicle.**

BATTERY SAVER SYSTEM

When all the following conditions are met for a period of time, the battery saver system will cut off the power supply to prevent battery discharge.

- The ignition switch is in the ON position. (See "Push-button ignition switch positions" (P.298).)

WARNING LIGHTS AND AUDIBLE REMINDERS

To help prevent the vehicle from moving unexpectedly by erroneous operation of the Intelligent Key or to help prevent the vehicle from being stolen, chime or beep sounds inside and outside the vehicle and the warning display appears on the vehicle information display.

When a chime or beep sounds or the warning display appears, be sure to check the vehicle and Intelligent Key.

See "Troubleshooting guide" (P.204) and "Vehicle information display" (P.111).

TROUBLESHOOTING GUIDE

Verify the location of all Intelligent Keys that are programmed for the vehicle. If another Intelligent Key is in range or inside the vehicle, the vehicle system may respond differently than expected.

- **When stopping the engine > "Hold Start to shut off engine Key" message appears on the display.**
  - The Intelligent Key is not inside the vehicle. Carry the Intelligent Key inside the vehicle and push the ignition switch once to stop the engine.
  - There is not the Intelligent Key or the battery charge is low. Push and hold the ignition switch for more than 2 seconds to stop the engine.
- **When closing the door after getting out of the vehicle > The Key Not Detected warning appears on the display, the outside chime sounds three times and the inside warning chime sounds for approximately 3 seconds.**
  - The engine is running. Place the ignition switch in the OFF position.
- **When opening the driver's door after the ignition switch is placed in the OFF position > The Check Rear Seat indicator appears on the display, then the horn sounds six times.**
  - The Rear Door Alert "Horn & Alert" setting (if so equipped) is selected. Check the rear seat for occupants or items, clear the Rear Door Alert message by using the steering switches.
- **When pushing the request switch to lock doors > The outside chime sounds for a few seconds.**
  - The Intelligent Key is inside the vehicle. Carry the Intelligent Key with you.
- **When pushing the ignition switch to start the engine > The Key Battery Low warning appears on the display.**
  - The Intelligent Key battery charge is low. Replace the battery with a new

one. (See "Intelligent Key battery replacement" (P.486).)

- **When pushing the ignition switch > The Key System Error warning appears on the display.**
  - It warns of a malfunction with the Intelligent Key system. It is recommended that you contact a NISSAN dealer.

HOW TO USE REMOTE KEYLESS ENTRY FUNCTION

⚠ WARNING

- **Radio waves could adversely affect electric medical equipment. Those who use a pacemaker should contact the electric medical equipment manufacturer for the possible influences before use.**
- **The Intelligent Key transmits radio waves when the buttons are pushed. The FAA advises that the radio waves may affect aircraft navigation and communication systems. Do not operate the Intelligent Key while on an airplane. Make sure the buttons are not operated unintentionally when the unit is stored during a flight.**

⚠ CAUTION

- **Do not allow the Intelligent Key, which contains electrical components, to come into contact with water or salt water. This could affect the system function.**
- **Do not drop the Intelligent Key.**
- **Do not strike the Intelligent Key sharply against another object.**
- **Do not change or modify the Intelligent Key.**
- **Wetting may damage the Intelligent Key. If the Intelligent Key gets wet, immediately wipe until it is completely dry.**
- **If the outside temperature is below 14°F (-10°C) degrees, the battery of the Intelligent Key may not function properly.**
- **Do not place the Intelligent Key for an extended period in an area where temperatures exceed 140°F (60°C).**
- **Do not attach the Intelligent Key with a key holder that contains a magnet.**
- **Do not place the Intelligent Key near equipment that produces a magnetic field, such as a TV, audio equipment, personal computers, cellular phone or wireless charger (if so equipped).**

The remote keyless entry function can operate all door locks using the remote keyless entry function of the Intelligent Key. The remote keyless entry function can operate at a distance of approximately 33 ft (10 m) from the vehicle. (The operating distance depends upon the conditions around the vehicle.)

The remote keyless entry function will not operate:

- When the Intelligent Key is not within the operational range.
- When the Intelligent Key battery is discharged.

The remote keyless entry function can also operate the vehicle alarm.

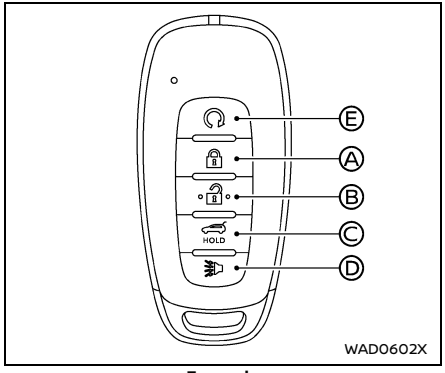

Example

Ⓐ LOCK button

Ⓑ UNLOCK button

Ⓒ Power liftgate button (if so equipped)

Ⓓ PANIC button

Ⓔ Remote engine start button

When you lock or unlock the doors or the liftgate, the hazard indicator will flash and the horn will sound as a confirmation.

Locking doors

1. Place the ignition switch in the OFF position.
2. Carry the Intelligent Key with you.*
3. Close all the doors.
4. Push the LOCK button Ⓐ on the Intelligent Key.
5. All the doors and the liftgate will lock.
6. The hazard indicator flashes twice and the horn chirps once.

*: Doors will lock with the Intelligent Key while the ignition switch is in the ON position.

Operate the door handles to confirm that the doors have been securely locked.

Unlocking doors

1. Push the UNLOCK button Ⓑ on the Intelligent Key once.
2. The hazard indicator flashes once. The driver's door will unlock.
3. Push the UNLOCK button again within 1 minute.
4. The hazard indicator flashes once. All the doors and the liftgate will unlock.

All doors will be locked automatically unless one of the following operations is performed within 1 minute after pushing the UNLOCK button while the doors are locked.

- Opening any door (including the liftgate).
- Pushing the ignition switch.

During this 1-minute time period, if the UNLOCK button is pushed, all doors will be locked automatically after another 1 minute.

NOTE:
The unlocking operation can be changed in "Selective Unlock" under the Vehicle Settings of the vehicle information display. For additional information, see "Vehicle Settings" (P.115).

Opening window(s) (if so equipped)

The Intelligent Key allows you to simultaneously open the window(s) equipped with automatic operation. All doors must be closed and the key must be outside the vehicle.

To open the window(s) equipped with automatic operation, push and hold the button on the Intelligent Key **for longer than 3 seconds** after all doors are unlocked.

The door window(s) equipped with automatic operation will open while pushing the button on the Intelligent Key.

To interrupt opening of the window(s) equipped with automatic operation, release the button.

- The Intelligent Key cannot close any window.
- All doors will be unlocked by the operation.

Opening/closing liftgate (if so equipped)

1. Push the power liftgate button Ⓒ for more than 1 second.
2. The liftgate will automatically open.

The outside chime sounds 3 times for approximately 3 seconds.

To close the liftgate, push the power liftgate button for more than 1 second.

The liftgate will automatically close.

If the button is pushed while the liftgate

is being opened or closed, the liftgate will immediately stop. Pushing the button again will reverse the direction of the liftgate. However, when the liftgate is near the fully open position, it moves in the closing direction and when the liftgate is near the fully close position, it moves in the opening direction.

Using panic alarm

If you are near your vehicle and feel threatened, you may activate the alarm to call attention as follows:

1. Push the PANIC button Ⓓ on the Intelligent Key for **more than 0.5 seconds.**
2. The theft warning alarm and headlights will stay on for 25 seconds.
3. The panic alarm stops when:
   - It has run for 25 seconds, or
   - Any of the buttons on the Intelligent Key is pushed.

Trailer light check

This functionality allows the customer to confirm trailer light operation, without the need of a second person to press the brake pedal or activate each turn signal light. The trailer light check can be performed by the Intelligent Key or through the Towing Settings in the vehicle information display. For additional information, see "Towing Settings" (P.117).

To activate the trailer light check function with your Intelligent Key, perform the following:

1. Aim the Intelligent Key at the vehicle.
2. Press and release the LOCK button.
3. Within 2 seconds, press and hold the LOCK button again for at least 2 seconds, until the horn beeps once and the park lights turn on.

The following events will occur:

- The left turn signal light on the vehicle and the trailer will flash for 5 seconds.
- The right turn signal light on the vehicle and the trailer will flash for 5 seconds.
- The stop lights on the vehicle and the trailer will turn ON for 5 seconds.
- Repeat 4 times in total (when the engine is running).

The front parking lights and the tail lights remain on while events above occur.

NOTE:

If the trailer lights do not work properly, check the connections and bulbs. If the vehicle lights do not turn on, see "Exterior and interior lights" (P.489). If the trailer light check routine fails to start, ensure the following vehicle conditions:

- **The vehicle is NOT moving, 0 MPH (0 km/h)**
- **Brake pedal is NOT depressed**
- **Left or right turn signal is OFF**
- **Trailer light check configuration is NOT disabled and available in the Towing Settings of the vehicle information display**
- **The hazard switch is NOT turned ON**
- **The shift position is in P (Park) position**
- **Vehicle is within Remote Keyless Entry range**

Remote engine start

The remote engine start button Ⓔ is on the Intelligent Key if the vehicle has remote engine start function. This function allows the engine to start from outside the vehicle. See "Remote engine start" (P.209).

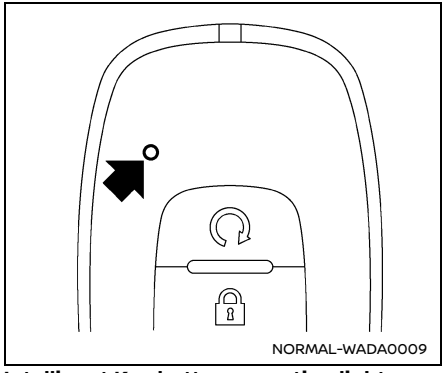

Intelligent Key button operation light

The light blinks only when you push any button on the Intelligent Key. The light illumination only signifies that the Intelligent Key has transmitted a signal. You may look and/or listen to verify that the vehicle has performed the intended operation. If the light does not blink, your battery may be too weak to communicate to the vehicle. If this occurs, the battery may need to be replaced. For additional information regarding the replacement of a battery, see "Intelligent Key battery replacement" (P.486).

Setting hazard indicator and horn mode

This vehicle is set in hazard indicator and horn mode when you first receive the vehicle.

In hazard indicator and horn mode, when the LOCK button Ⓐ is pushed, the hazard indicator flashes twice and the horn chirps once. When the UNLOCK button Ⓑ is pushed, the hazard indicator flashes once.

If horns are not necessary, the system can be switched to the hazard indicator mode.

In hazard indicator mode, when the LOCK button is pushed, the hazard indicator flashes twice. When the UNLOCK button is pushed, neither the hazard indicator nor the horn operates.

Switching procedure:

To switch the hazard indicator and horn (chime) operation, push the LOCK Ⓐ and UNLOCK Ⓑ buttons on the Intelligent Key simultaneously for more than 4 seconds.

- When the hazard indicator mode is set, the hazard indicator flashes 3 times.
- When the hazard indicator and horn mode is set, the hazard indicator flashes once and the horn chirps once.

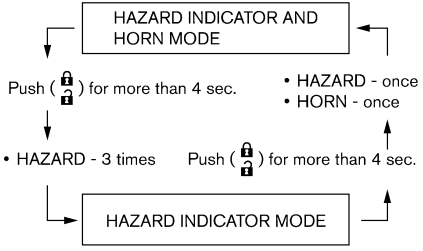

The horn operation can also be turned on or off in the vehicle information display. See "Vehicle Settings" (P.115).

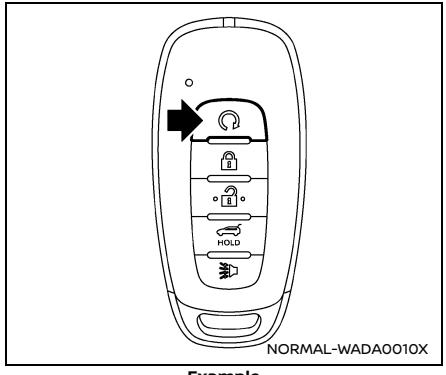

Example

BASIC INFORMATION

The remote engine start button is on the Intelligent Key if the vehicle has remote engine start function. This function allows the engine to start from outside the vehicle.

Some systems, such as the air conditioner system, will turn on during a remote engine start, if the system was on the last time the ignition switch was turned off.

Laws in some local communities may restrict or prohibit the use of remote engine start, or the amount of time a parked vehicle engine may idle. For example, some laws require a person using remote engine start to have the vehicle in view or may restrict idling time except in freezing temperatures. Check local regulations for any requirements.

Other conditions may affect the remote engine start function. See "Conditions the remote engine start will not work" (P.210).

Other conditions can affect the performance of the Intelligent Key transmitter. See "Intelligent Key system" (P.199) for additional information.

REMOTE ENGINE START OPERATING RANGE

⚠ WARNING

- **To help avoid risk of injury or death through unintended operation of the vehicle and or its systems, including entrapment in windows or inadvertent door lock activation, do not leave children, people who require the assistance of others or pets unattended in your vehicle. Additionally, the temperature inside a closed vehicle on a warm day can quickly become high enough to cause a significant risk of injury or death to people and pets.**
- **Do not use remote engine start in closed spaces such as a garage. Do not breathe exhaust gases; they contain colorless and odorless carbon monoxide. Carbon monoxide is dangerous. It can cause unconsciousness or death.**

⚠ CAUTION

When the Intelligent Key battery is discharged or other strong radio waves/noises are present near the operating location, the Intelligent Key operating range becomes narrower, and the Intelligent Key may not function properly.

The remote engine start function can only be used when the Intelligent Key is within the specified operating range from the vehicle.

The remote engine start operating range is approximately 197 ft (60 m) from the vehicle.

REMOTE STARTING THE ENGINE

To use the remote start function to start the engine, perform the following:

1. If the doors are unlocked, push the LOCK button to lock all doors.
2. Aim the Intelligent Key at the vehicle.
3. Push the LOCK button again.
4. Within 5 seconds push and hold the remote engine start button until the turn signal lights flash and the tail lights illuminate. If the vehicle is not within view, push and hold the remote engine start button for at least 2 seconds.

The following events will occur when the engine starts:

- The front parking lights will turn on and remain on as long as the engine is running.
- The doors will be locked and the air conditioner system may turn on.
- The engine will continue to run for about 20 minutes.

Depress and hold the brake pedal, then place the ignition switch in the ON position before driving. For further instructions, see "Driving the vehicle" (P.301).

The vehicle needs to be driven at speeds of 4 MPH (7 km/h) before the remote engine start procedure can be used again.

CANCELING A REMOTE ENGINE START

To cancel a remote engine start, perform one of the following:

- Aim the Intelligent Key at the vehicle and push the remote engine start button until the front parking lights turn off.
- Turn on the hazard indicator flashers.
- Cycle the ignition switch ON and then OFF.
- The 20 minute timer has expired.
- The engine hood has been opened.
- The shift position is shifted out of the P (Park) position.
- The theft alarm sounds due to illegal entry into the vehicle.
- The ignition switch is pushed without an Intelligent Key in the vehicle.
- The ignition switch is pushed with an Intelligent Key in the vehicle but the brake pedal is not depressed.
- The accelerator pedal is depressed.
- The vehicle moves after a remote engine start. (The hazard indicator flashers blink once and the engine is stopped.)

CONDITIONS THE REMOTE ENGINE START WILL NOT WORK

The remote engine start will not operate if any of the following conditions are present:

- The ignition switch is placed in the ON position.
- The hood is not securely closed.
- The hazard indicator flashers are on.
- The engine is still running. The engine must be completely stopped.
- The remote engine start button is not pushed and held for at least 2 seconds.
- The remote engine start button is not pushed and held within 5 seconds of pushing the LOCK button.
- The doors are not closed and locked. (The hazard indicator flashers blink twice to indicate the function is not operated.)
- The liftgate is open. (The hazard indicator flashers blink twice to indicate the function is not operated.)
- The Key System Error warning message remains on in the vehicle information display.
- The theft alarm sounds due to illegal entry into the vehicle. (The hazard indicator flashers blink twice to indicate the function is not operated.)
- The remote engine start has already been used once. (To use the remote engine start function again, the vehicle needs to be driven at speeds of 4 MPH (7 km/h).)
- The shift position is not in the P (Park) position.

HOOD

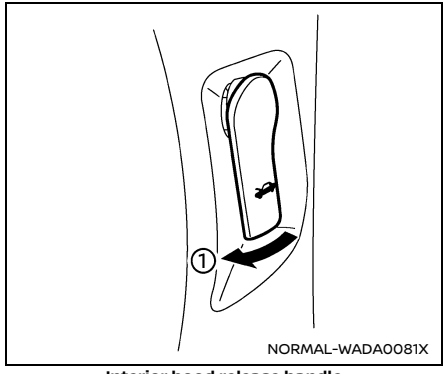

Interior hood release handle

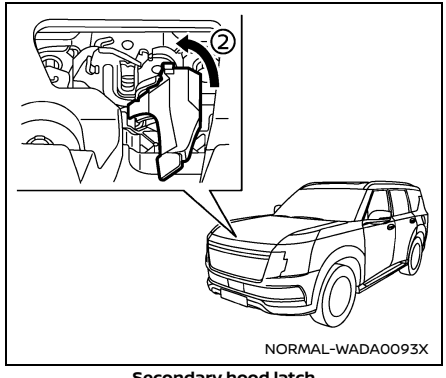

Secondary hood latch

1. Pull the interior hood release handle ① located below the driver's side instrument panel; the hood will then spring up slightly.
2. Pull the secondary hood latch ② sideways at the front of the hood with your fingertips and raise the hood.
3. When closing the hood, slowly close the hood down and make sure it locks into place.

⚠ WARNING

- **Make sure the hood is completely closed and latched before driving. Failure to do so could cause the hood to fly open and result in an accident.**
- **If you see steam or smoke coming from the engine compartment, to avoid injury do not open the hood.**

LIFTGATE

BASIC INFORMATION

⚠ WARNING

- **Always be sure the liftgate has been closed securely to prevent it from opening while driving.**
- **Do not drive with the liftgate open. This could allow dangerous exhaust gases to be drawn into the vehicle. For additional information, refer to "Exhaust gas (carbon monoxide)" (P.289).**
- **To help avoid risk of injury or death through unintended operation of the vehicle and or its systems, including entrapment in windows or inadvertent door lock activation, do not leave children, people who require the assistance of others or pets unattended in your vehicle. Additionally, the temperature inside a closed vehicle on a warm day can quickly become high enough to cause a significant risk of injury or death to people and pets.**
- **Always be sure that hands and feet are clear of the door frame to avoid injury while closing the liftgate.**

⚠ CAUTION

Do not use accessory carriers that attach to the liftgate. Doing so will cause damage to the vehicle.

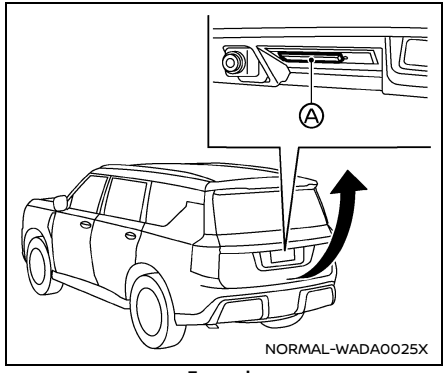

Example

OPERATING MANUAL LIFTGATE (if so equipped)

To open the liftgate, unlock it and push the liftgate opener switch Ⓐ. Pull up the liftgate to open.

The liftgate can be unlocked by:

- Push the liftgate request switch (if so equipped) with the Intelligent Key carried with you.
- Push the UNLOCK button on the Intelligent Key.
- Push the power door lock switch to the "UNLOCK" position.

To close the liftgate, pull down until it securely locks.

OPERATING POWER LIFTGATE (if so equipped)

To operate the power liftgate, the vehicle must be in the P (Park) position.

The power liftgate will not operate if the battery voltage is low.

If the liftgate is open approximately 5.9 in (150 mm) or less from the fully closed position, power liftgate cannot be performed by any switch operations. To operate the power liftgate, manually close the liftgate.

The power liftgate operation can be activated or deactivated in the vehicle information display. (See "Vehicle Settings" (P.115).)

NOTE:

- **When washing, waxing or maintaining your vehicle, placing or replacing the body cover, or splashing water to the area around the kick motion sensor, turn off the power liftgate.**
- **If the power open or close operation is performed consecutively, the safety mode activates and the operation cannot be performed for a certain period of time. In this case, wait for a while and then perform the operation.**

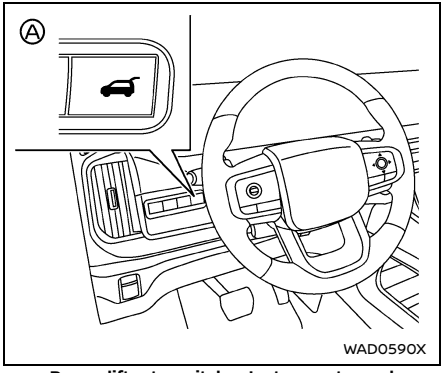

Power liftgate switch — Instrument panel

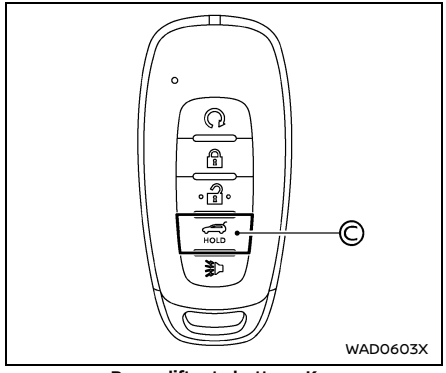

Power liftgate button - Key

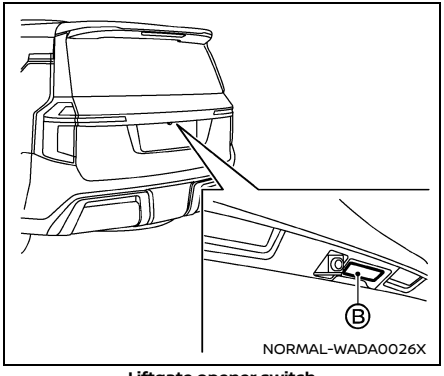

Liftgate opener switch

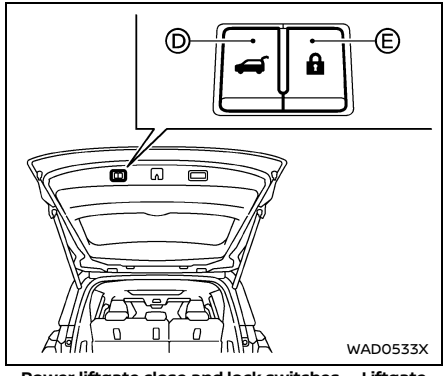

Power liftgate close and lock switches — Liftgate

Power open (using switches)

When the liftgate is fully closed, the liftgate will fully open automatically by:

- pushing the power liftgate switch Ⓐ on the instrument panel for more than 1 second
- pushing the liftgate opener switch Ⓑ
- pushing the power liftgate button Ⓒ on the key for more than 1 second

The outside chime sounds when the liftgate starts opening.

NOTE:

The liftgate can be opened by the power liftgate switch Ⓐ or the power liftgate button Ⓒ even if the liftgate is locked. The liftgate can be unlocked and opened independently of the other doors, even when they are locked. The liftgate must be unlocked (or the Intelligent Key must be within range) to open with the liftgate opener switch Ⓑ.

Power close (using switches)

When the liftgate is fully opened, the liftgate will fully close automatically by:

- pushing the power liftgate switch Ⓐ on the instrument panel for more than 1 second
- pushing the power liftgate button Ⓒ on the key for more than 1 second
- pushing the power liftgate close switch Ⓓ on the lower part of the liftgate

The outside chime sounds when the liftgate starts closing.

Power close and lock

When the liftgate is fully opened and the Intelligent Key is carried with you near the liftgate, all the doors and the liftgate will lock and the liftgate will fully close automatically by pushing the power liftgate lock switch Ⓔ on the lower part of the liftgate.

The outside chime sounds when the liftgate starts closing.

Stop and reverse function

The power liftgate will stop immediately if one of the following actions is performed during power open or close.

- pushing the power liftgate switch Ⓐ
- pushing the liftgate opener switch Ⓑ
- pushing the power liftgate close switch Ⓓ on the lower part of the liftgate
- pushing the power liftgate button Ⓒ on the key

And then the power liftgate will move in the reverse direction if one of the above actions is performed again.

The outside chime sounds when the liftgate starts to reverse.

Auto reverse function

The auto-reverse function enables the liftgate to automatically reverse when something is caught in the liftgate as it is opening or closing. When the control unit detects an obstacle, the liftgate will reverse and stop.

If a second obstacle is detected, the liftgate motion will stop.

A pinch sensor is mounted on each side of the liftgate. If an obstacle is detected by the pinch sensor during power close, the liftgate will reverse and stop.

NOTE:
If the pinch sensor is damaged or removed, the power close function will not operate.

⚠ WARNING

There is a small distance immediately before the closed position that cannot be detected. Make sure that all passengers keep their hands, etc., clear from the liftgate opening before closing the liftgate.

Manual mode

If power operation is not available, the liftgate can be operated manually. Power operation may not be available if the battery voltage is low or if the liftgate is open approximately 5.9 in (150 mm) or less from the fully closed position. When the power liftgate is turned off, the liftgate can be opened manually by pushing the liftgate opener switch. If the power liftgate opener switch is pushed during power open or close, the power operation will be canceled and the liftgate can be operated manually. This will allow normal power operation functions to resume.

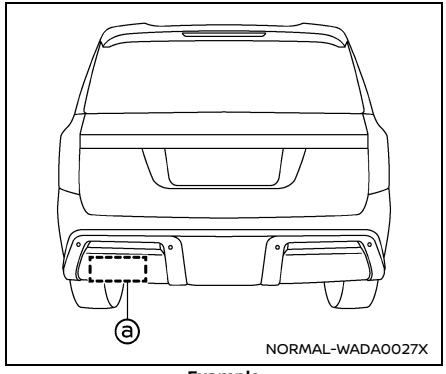

Example

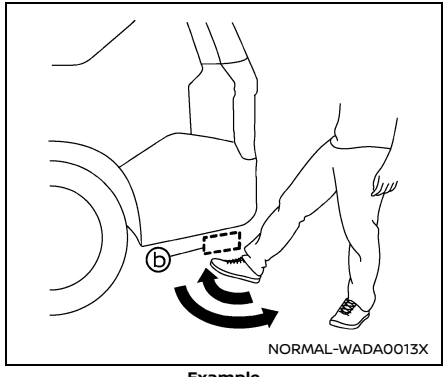

Example

MOTION-ACTIVATED LIFTGATE (if so equipped)

Basic information

The liftgate can be operated using a quick kicking motion under the left side of the rear bumper.

The kick motion sensor ⓐ is located on the left side of the rear bumper. When you move your foot under and then away from the operating range ⓑ similar to a kicking motion, while carrying the Intelligent Key with you, the liftgate will open or close automatically.

Proper operation technique

- While at the rear of the vehicle, begin making a quick forward kicking motion.
- Raise your foot straight under the left of the rear bumper then immediately return your foot to the ground in a continuous motion.
- You do not need to hold your foot under the bumper or move it side to side. Immediately return your foot to the ground.
- The kicking motion should be straight, smooth and consistent.
- After your kick motion is complete, step back and allow the liftgate to open/close.
- Three beeps will sound and the liftgate will begin moving within 2 seconds after the kick.

⚠ WARNING

Prevent unintentional liftgate opening/closing. There may be conditions when opening/closing the liftgate is not desired. Keep the Intelligent Key out of range of the liftgate, 7 ft (2 m) or more or inside the vehicle, when washing or working around the back of the vehicle.

NOTE:

- **The kick motion sensor may not function under the following conditions:**
  - **When operating near a location where strong radio waves/noises are transmitted, such as a TV tower, power station or broadcasting station.**
  - **When the vehicle is parked near a parking meter.**
- **The power liftgate may not operate when your foot remains in the operating range ⓑ.**

⚠ CAUTION

- **When the Intelligent Key is carried with you near the liftgate, even someone, who does not carry the Intelligent Key, may be able to open or close the liftgate with a kick motion.**
- **Do not perform a kick motion near the exhaust system components while they are hot. You may severely burn yourself.**
- **Do not perform a kick motion on an unstable place (for example, on a slope or a muddy ground, etc.).**

Power open or close function

The liftgate will fully open automatically using the kick motion sensor.

1. Carry the Intelligent Key.
2. Move your foot under and away from the rear bumper similarly to a kicking motion within the operation range of the kick motion sensor.
3. The liftgate will automatically open or close.

Stop and reverse function

The power liftgate will stop immediately if a kick motion is performed during power open or close. The liftgate can be stopped even if you do not carry the Intelligent Key.

And then the power liftgate will move in the reverse direction if a kick motion is performed again. The power liftgate can be reversed when you carry the Intelligent Key.

GARAGE MODE SYSTEM (if so equipped)

The liftgate can be set to open to a specific height by performing the following:

1. Open the liftgate.
2. Pull the liftgate down to the desired position and hold the liftgate (the liftgate will have some resistance when being manually adjusted).
3. While holding the liftgate in position, press and hold the power liftgate close and lock switch located on the liftgate for approximately 3 seconds or until 2 beeps are heard.

The liftgate will open to the selected position setting. To change the position of the liftgate, repeat steps 1-3 for setting the position of the liftgate.

⚠ CAUTION

Do not set the height of the liftgate below approximately 1/3 of the way to the floor using garage mode. Even if you set the height below approximately 1/3 of the way to the floor, the height will automatically be set to approximately 1/3 of the way to the floor.

AUTO CLOSURE

When the liftgate reaches the secondary position, the closure motor engages and pulls the liftgate to its primary latch position.

Do not apply excessive force when the auto closure is operating. Excessive force applied may cause the mechanism to malfunction.

⚠ CAUTION

- **The liftgate will automatically close from the secondary position. To avoid pinching, keep hands and fingers away from liftgate opening.**
- **Do not let children operate the liftgate.**

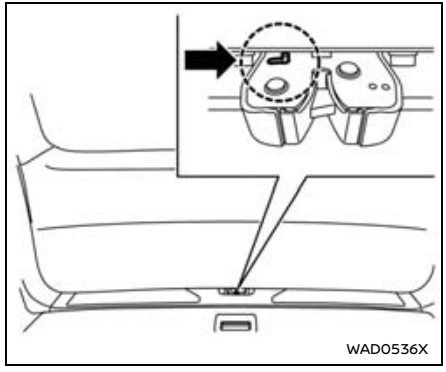

LIFTGATE RELEASE LEVER

If the liftgate cannot be opened with the power door lock switch due to a discharged battery, follow these steps.

1. Fold the 3rd row seats down. (See "3rd row seats" (P.22).)
2. Insert a suitable tool in the access opening. Move the release lever to the left. The liftgate will be unlatched.
3. Push the liftgate up to open.

It is recommended that you contact a NISSAN dealer as soon as possible for repair.

FRONT, SIDE AND REAR UNIQUE PARTS (NISMO models)

The NISMO models have the following unique parts on the front, side and rear of the vehicle.

- Front spoiler (P.295)
- Side sill extensions (P.295)
- Rear bumper with the aerodynamic diffuser (P.295)

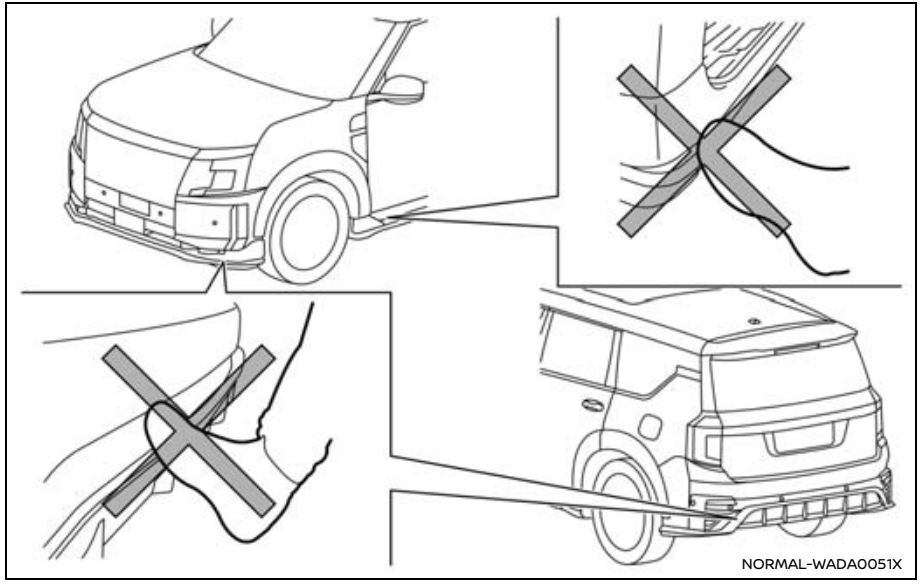

FUEL-FILLER DOOR

⚠ CAUTION

- **Do not place your foot on or step on the front spoiler and rear bumper with the aerodynamic diffuser. Also, do not step on the side sill extensions. Doing so may result in damage to the front spoiler, side sill extensions and rear bumper with the aerodynamic diffuser.**
- **When the vehicle height is changed by the air suspension system (if so equipped):**
  - **Be careful not to damage the front spoiler, side sill extensions or rear bumper with the aerodynamic diffuser by contacting the road surface and objects such as curbs, parking blocks, etc.**
  - **Reduce the vehicle speed when the vehicle approaches or leaves a steep hill.**

  See "Air suspension system (if so equipped)" (P.413).

BASIC INFORMATION

⚠ CAUTION

- **Avoid applying direct water pressure, such as high-pressured sprayer, on or around the fuel-filler door.**
- **Be sure to close the fuel-filler door before using an automatic car wash or a high-pressured car wash.**

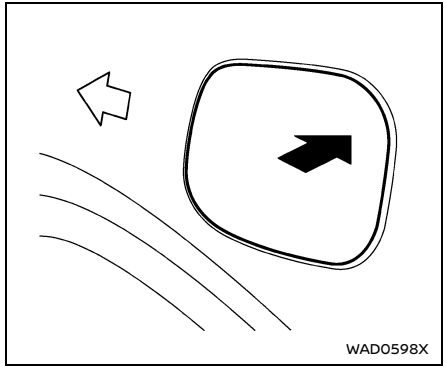

OPENING THE FUEL-FILLER DOOR

To open the fuel-filler door, push the right side of the door.

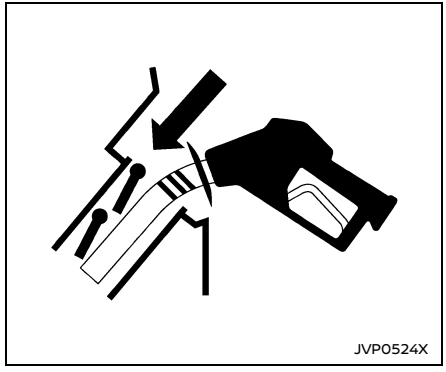

JVP0524X

HOW TO REFUEL

The fuel tank is not equipped with a fuel-filler cap. After opening the fuel-filler door, insert the fuel pump nozzle directly into the fuel-filler opening. When the fuel pump nozzle is pulled out, the fuel-filler opening will be sealed.

To refuel:

Be sure to insert the fuel pump nozzle slowly into the fuel-filler opening as far as it will go before fueling.

Never move the nozzle during refueling.

Pull out the nozzle approximately 5 seconds after the fuel pump nozzle shuts off automatically (initial shut-off).

Close the fuel-filler door after refueling.

If you need to refuel from a portable fuel container, use the funnel supplied with your vehicle. (See "When refueling from a portable fuel container" (P.220).)

⚠ CAUTION

- **Do not attempt to open the flaps on the fuel-filler opening using any tool other than the fuel pump nozzle.**
- **This fuel-filler opening is only conformable to normal fuel pump nozzles at gas stations. Using a nozzle with a small diameter may damage the opening and the fuel system.**
- **If fuel is spilled on the vehicle body, flush it away with water to avoid paint damage.**

⚠ WARNING

- **Gasoline is extremely flammable and highly explosive under certain conditions. You could be burned or seriously injured if it is misused or mishandled. Always stop engine and do not smoke or allow open flames or sparks near the vehicle when refueling.**
- **Do not attempt to top off the fuel tank after the fuel pump nozzle shuts off automatically. Continued refueling may cause fuel overflow, resulting in fuel spray and possibly a fire.**
- **Never pour fuel into the throttle body to attempt to start your vehicle.**
- **Do not fill a portable fuel container in the vehicle or trailer. Static electricity can cause an explosion of flammable liquid, vapor or gas in any vehicle or trailer. To reduce the risk of serious injury or death when filling portable fuel containers:**
  - **Always place the container on the ground when filling.**
  - **Do not use electronic devices when filling.**
  - **Keep the pump nozzle in contact with the container while you are filling it.**
  - **Use only approved portable fuel containers for flammable liquid.**

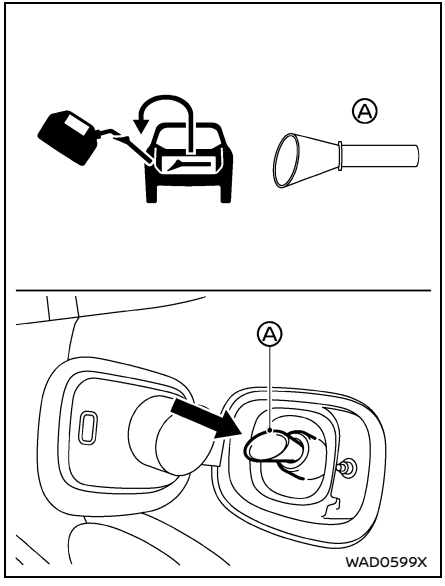

WHEN REFUELING FROM A PORTABLE FUEL CONTAINER

If you need to refuel from a portable fuel container, use the funnel Ⓐ stored in the bag (located under the luggage board).

Be sure to insert the funnel into the fuel-filler opening slowly and fully. Insert the nozzle of the portable fuel container into the opening along the funnel and fill the fuel tank.

After refueling, remove the funnel from the fuel-filler opening. Wipe the funnel clean and return it to the bag.

⚠ CAUTION

- **Do not insert the nozzle of the portable fuel container directly into the fuel-filler opening. Doing so may damage the opening and the fuel system.**
- **Use only the funnel provided with your vehicle. Otherwise, the fuel-filler opening and the fuel system may be damaged.**

BASIC INFORMATION

⚠ WARNING

- **Do not adjust the steering wheel while driving. You could lose control of your vehicle and cause an accident.**
- **Do not adjust the steering wheel any closer to you than is necessary for proper steering operation and comfort. The driver's air bag inflates with great force. If you are unrestrained, leaning forward, sitting sideways or out of position in any way, you are at greater risk of injury or death in a crash. You may also receive serious or fatal injuries from the air bag if you are up against it when it inflates. Always sit back against the seatback and as far away as practical from the steering wheel. Always use the seat belts.**

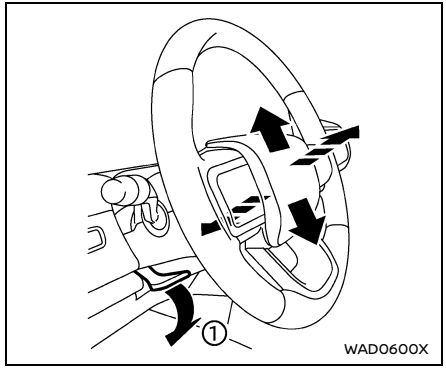

MANUAL OPERATION (if so equipped)

Pull the lock lever ① down and adjust the steering wheel up, down, forward or rearward to the desired position. Push the lock lever up securely to lock the steering wheel in place.

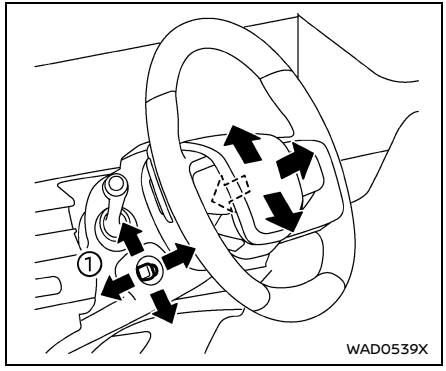

POWER OPERATION (if so equipped)

Tilt or telescopic operation

Move the lever ① to adjust the steering wheel up or down, forward or rearward to the desired position.

Entry/Exit function operation:

The memory seat system will make the steering wheel move up automatically when the driver's door is opened with the ignition switch in the OFF position. This lets the driver get into and out of the seat more easily.

For more information, see "Memory seat (if so equipped)" (P.233).

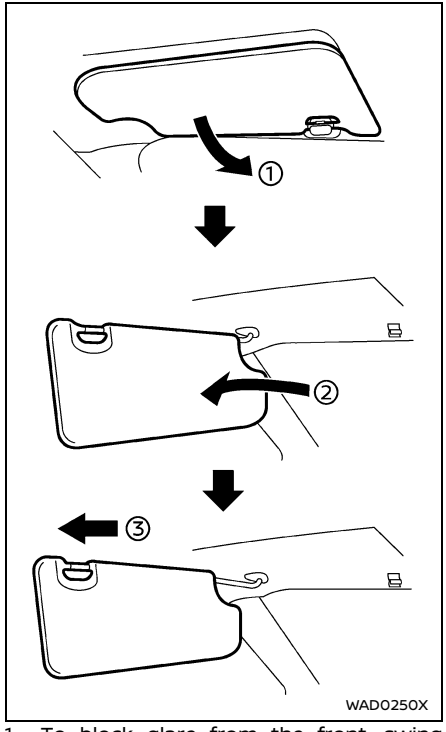

1. To block glare from the front, swing down the main sun visor ①.

2. To block glare from the side, remove the main sun visor from the center mount and swing it to the side ②.
3. Slide the sun visor ③ in or out as needed.

CAUTION

- **Do not store the sun visor before returning the extension to its original position.**
- **Do not pull the extension sun visor forcedly downward.**

ASSIST GRIPS

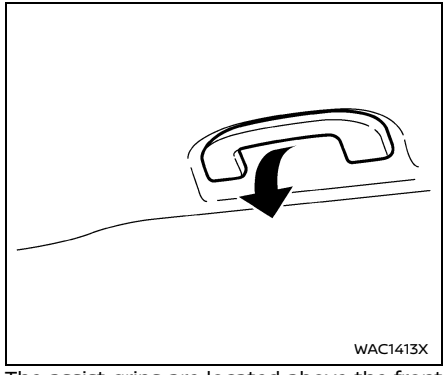

The assist grips are located above the front and rear side windows.

CAUTION

Do not use the assist grip when getting into or out of the vehicle. This may damage the assist grip and cause you to fall.

MIRRORS

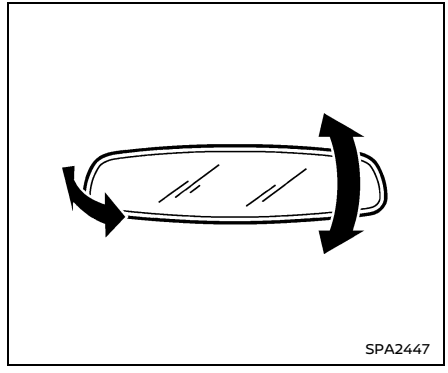

INSIDE MIRROR

Basic information

Adjust the height and the angle of the inside mirror to the desired position.

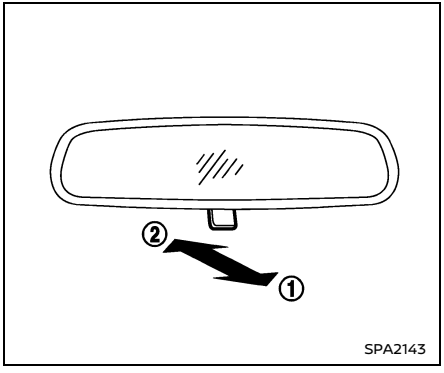

Manual anti-glare type (if so equipped)

Pull the adjusting lever ① when the glare from the headlights of the vehicle behind you obstructs your vision at night.

Push the adjusting lever ② during the day for the best rearward visibility.

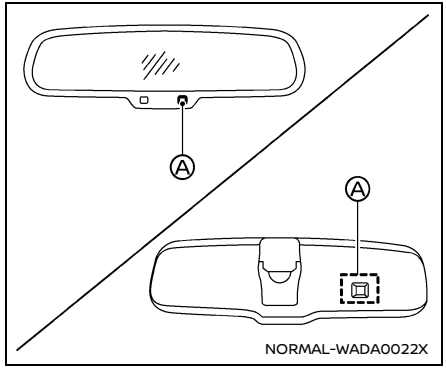

Automatic anti-glare type (if so equipped)

The inside mirror is designed so that it automatically changes reflection according to the intensity of the headlights of the following vehicle.

The anti-glare system will be automatically turned on when the ignition switch is placed in the ON position.

Do not hang any objects on the mirror or apply glass cleaner. Doing so will reduce the sensitivity of the sensor Ⓐ, resulting in improper operation.

Intelligent Rear View Mirror (if so equipped)

⚠ WARNING

- **Failure to follow the warnings and instructions for proper use of the Intelligent Rear View Mirror could result in serious injury or death.**
  - **The Intelligent Rear View Mirror is a convenience feature but it is not a substitute for proper vehicle operation. The system has areas where objects cannot be viewed. Check the blind spot of the Intelligent Rear View Mirror before vehicle operation. The driver is always responsible for safe driving.**
  - **Do not disassemble or modify the Intelligent Rear View Mirror, the camera unit or wirings. If you do, it may result in accidents or fire. In case you notice smoke or smell coming from the Intelligent Rear View Mirror, stop using the system immediately. It is recommended that you see a NISSAN dealer for servicing.**
  - **Do not adjust the Intelligent Rear View Mirror while driving. Doing so can be a distraction and it could lose control of your vehicle and cause an accident or serious injury.**

– Do not gaze into the Intelligent Rear View Mirror display during driving. It may cause a distraction and it could lose control of your vehicle and cause an accident or serious injury.

– Do not put a cigarette or flames to the Intelligent Rear View Mirror, the camera unit or wirings. It may cause a fire.

- **Be sure to adjust the Intelligent Rear View Mirror before driving. Switch the system to the conventional rearview mirror mode and be properly seated on the driver's seat. Then adjust the mirror so as to see the rear window properly. Driving without adjusting the mirror may cause difficulty in watching the display at Intelligent Rear View Mirror mode (camera view mode) due to the reflection from the surface of the mirror.**
- **If the indicator light goes off when the Intelligent Rear View Mirror mode (camera mode) is used, immediately switch the system to the conventional rearview mirror mode. If you switch the mode to the Intelligent Rear View Mirror mode again and the indicator does not illuminate, the system may be malfunctioning. It is recommended you visit a NISSAN dealer for servicing.**
- **When strong light (for example, sunlight or high beams from following vehicles) enters the camera, a light beam or a glaring light may appear on the monitor screen of the Intelligent Rear View Mirror. In that case, switch the system to the conventional rearview mirror mode appropriately.**
- **If you find it difficult to use the Intelligent Rear View Mirror mode due to reasons such as ambient brightness, please switch to the conventional rearview mirror mode accordingly.**
- **If dirt, rain or snow accumulates on the exterior glass surface covering the camera, the Intelligent Rear View Mirror may not display objects clearly. Use of the rear window wiper/washer may improve visibility, but if not, switch the Intelligent Rear View Mirror to the conventional rearview mirror mode until a time the glass covering the camera can be cleaned.**

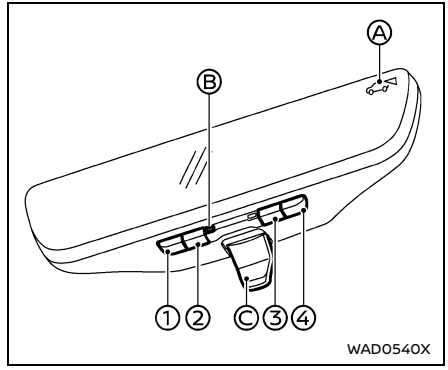

① MENU button
② Left button
③ Right button
④ Mode select button
Ⓐ Indicator
Ⓑ Indicator light
Ⓒ Mode select lever

Components:

Intelligent Rear View Mirror provides a clear rearview from a camera located on the rear of the vehicle. Intelligent Rear View Mirror has two modes: conventional rearview mirror mode and Intelligent Rear View Mirror mode (camera view mode). You can switch these two modes by the mode select lever Ⓒ.

When the Intelligent Rear View Mirror mode

is selected, the indicator Ⓐ is displayed and the indicator light Ⓑ illuminates.

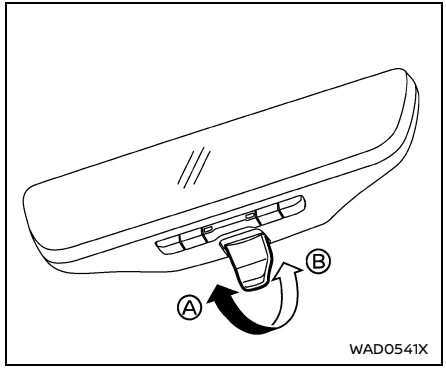

WAD0541X

How to change the mode:

The mode can be switched when the ignition switch is in the ON position.

- Pull the mode select lever Ⓐ to switch to the Intelligent Rear View Mirror mode (camera view mode).
- Push the mode select lever Ⓑ to switch to the conventional rearview mirror mode.

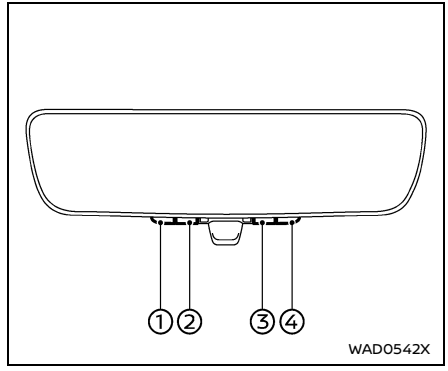

WAD0542X

How to make settings of Intelligent Rear View Mirror:

You can choose display settings of the Intelligent Rear View Mirror such as brightness, camera angle, textual indication ON or OFF and language.

When the Intelligent Rear View Mirror mode is on, setting menu can be selected by pushing the MENU button ①. Push ② or ③ to select an item and then push the ④ button.

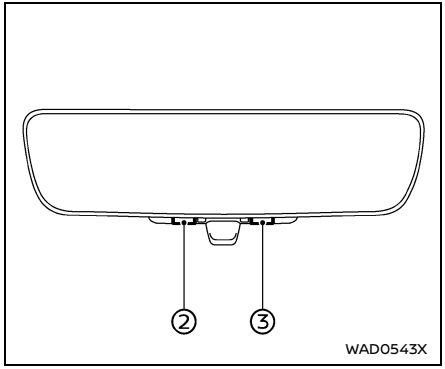

Brightness:
The brightness of the display screen can be adjusted.

- Push the left button ② to dim the screen.
- Push the right button ③ to brighten the screen.

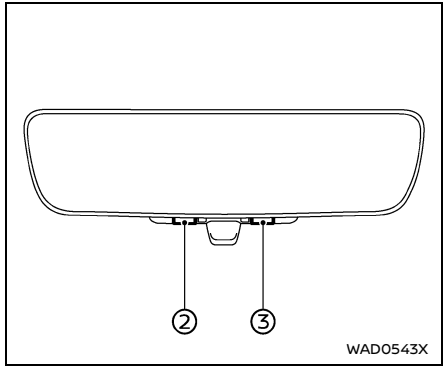

Down/Up:
The vertical camera angle of the display screen can be adjusted.

- Push the left button ② to down the camera angle.
- Push the right button ③ to up the camera angle.

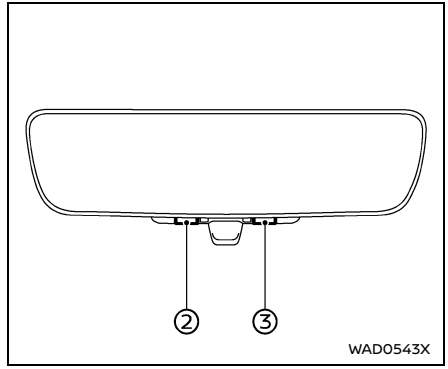

Left/Right:
The horizontal camera angle of the display screen can be adjusted.

- Push the left button ② to move the camera angle to the left.
- Push the right button ③ to move the camera angle to the right.

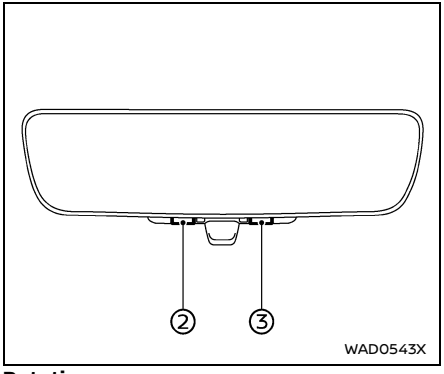

Rotation:

The camera angle of the display screen can be rotated.

- Push the left button ② to rotate the camera angle to the left.
- Push the right button ③ to rotate the camera angle to the right.

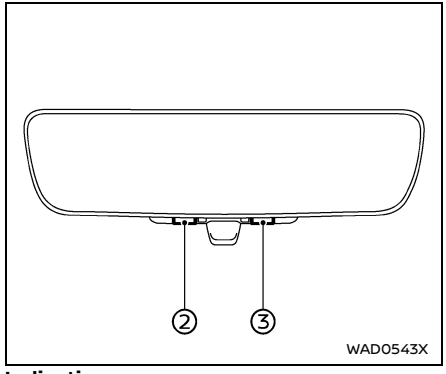

Indication:

The textual indication can be turned on or off on the Intelligent Rear View Mirror display screen.

- Push the left button ② to disable the textual indication on the display screen.
- Push the right button ③ to enable the textual indication on the display screen.

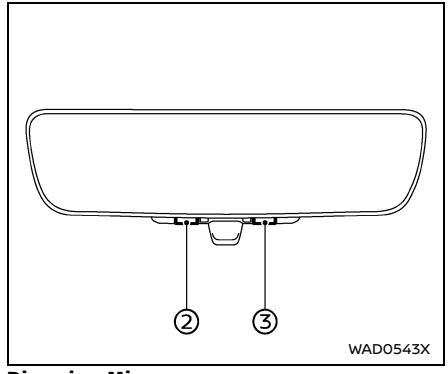

Dimming Mirror:

The mirror is designed so that it automatically changes reflection according to the intensity of the headlights of the following vehicle. You can enable or disable the automatic anti-glare mode.

- Push the left button ② to disable the automatic anti-glare mode.
- Push the right button ③ to enable the automatic anti-glare mode.

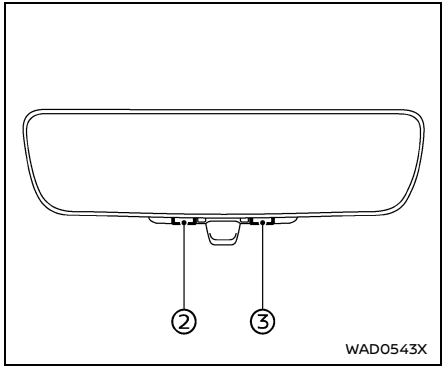

Language:
The language of the textual indication can be selected on the Intelligent Rear View Mirror display screen.
Select the language by using the ② or ③ button. The language setting will be retained even if the engine is restarted.

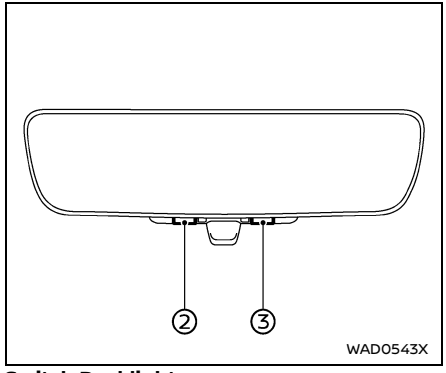

Switch Backlight:
The illumination of the buttons can be turned on or off.
- Push the button ② to turn off the illumination.
- Push the button ③ to turn on the illumination.

License:
The license information is displayed.

Intelligent Rear View Mirror system precautions:

NOTE:
- **Long-term use of this system in stopping engine may cause battery to be discharged.**
- **Do not attach an antenna of wireless device near the Intelligent Rear View Mirror. Electric wave from wireless device may cause disturbed image in Intelligent Rear View Mirror.**
- **Do not push buttons excessively or operating the lever roughly may cause a system failure or the Intelligent Rear View Mirror itself to drop.**
- **Never turn the body of Intelligent Rear View Mirror by 90° or more. It may damage the Intelligent Rear View Mirror.**
- **Do not apply strong shocks to the body of Intelligent Rear View Mirror. It may cause a system failure.**
- **Do not apply heavy load to the camera and camera-cover on the rear of the vehicle. It may cause the camera to be removed or may cause a system failure.**
- **If it is difficult to see the Intelligent Rear View Mirror display screen because of a strong external light, switch the mode to the conventional rearview mirror mode for better use.**
- **Close the sunshade (if so equipped) when the Intelligent Rear View Mirror display screen is unclear due to strong external light.**

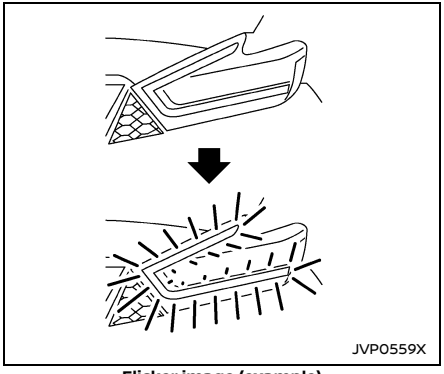

Flicker image (example)

- **When LED headlights are viewed on the Intelligent Rear View Mirror display, the images may flicker. This is normal.**
- **Due to diffused reflection from external environment, images on the screen may flicker. This is not a malfunction.**
- **A quick movement of a thing may not be able to display on the camera view screen. This is not a malfunction.**
- **Turn on the headlights at twilight or in a tunnel, etc.**
- **The Intelligent Rear View Mirror mode (camera view mode) display is different from the conventional rearview mirror. Objects in the display may differ from actual distance. Do not solely rely on the Intelligent Rear View Mirror. Always rely on your own operation to avoid accidents.**
- **If the brightness of the camera view display is adjusted to excessive bright level, it may cause an eyestrain in the driving. Adjust the brightness properly.**
- **Use the rear window wiper when it rains. If the camera view image is still unclear when the rear window wiper is in operation, check the deterioration of the rear window wiper blade.**
- **When using the rear window wiper, images on the screen may flicker. This is not a malfunction.**
- **Defog the rear window with defroster when rear window is fogged. Use the conventional rearview mirror mode until the rear window is fully defogged.**
- **The display of the Intelligent Rear View Mirror may become hot. This is not a malfunction.**
- **The color of an object in the distance or in the dark may be difficult to be recognized. This is not a malfunction.**

System maintenance (Intelligent Rear View Mirror):

- Always keep the mirror and camera area of the rear window clean.
- Clean the mirror and the camera lens with a dry soft cloth.
- When cleaning the camera area of the rear window, use a soft cloth dampened with water and a neutral detergent. Then dry it with a dry soft cloth.
- If the image on the Intelligent Rear View Mirror display screen is still unclear even after cleaning the camera area of the rear window, an oil film may be adhering to the rear window glass. Clean the rear window glass with an oil film remover.
- Never use alcohol, benzine, thinner, or any similar material to clean the mirror or camera lens. It will cause a discoloration, deterioration or a system malfunction.
- Do not attach a sticker (including transparent material) on the camera area of the rear window.

License information:

This product includes the following software.

(1) Software developed by or for Panasonic Automotive Systems Co., Ltd. (Panasonic)

(2) Third-party software licensed to Panasonic

(3) Open source software

Regarding (3) Open source software, it includes open source software (OSS), including various software to which license information applies.

Refer to the license web site at: http://car.panasonic.jp/oss/m03xsn9d

OUTSIDE MIRRORS

Basic information

⚠ WARNING

Objects viewed in the outside mirror on the passenger side are closer than they appear. Be careful when moving to the right. Using only this mirror could cause an accident. Use the inside mirror or glance over your shoulder to properly judge distances to other objects.

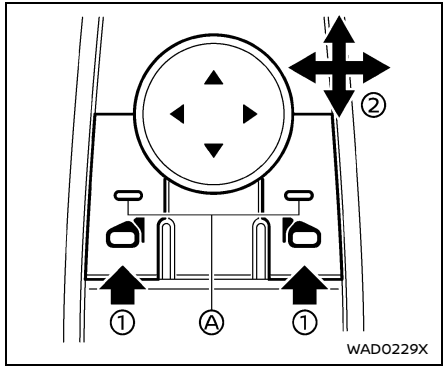

Adjusting outside mirrors

The outside mirror control switch is located on the driver's armrest.

The outside mirror will operate when the ignition switch is in the ON or Auto ACC position.

Push either the right or left switch to select the right or left side mirror ① (the indicator light Ⓐ on the selected mirror switch illuminates), then adjust ② using the control switch.

Defrosting outside mirrors (if so equipped)

The outside mirrors will be heated when the rear window defroster switch is operated. (See "Rear window defroster and outside mirror defroster (if so equipped)" (P.154).)

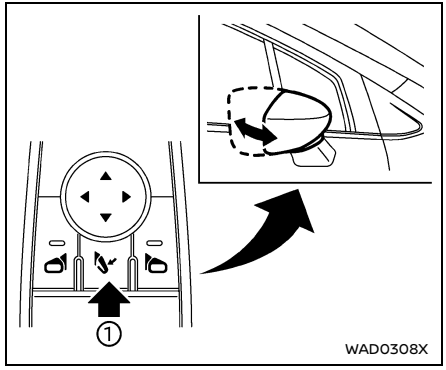

Example

Foldable outside mirrors

Remote control type:

The outside rearview mirror remote control operates when the ignition switch is in the ON or Auto ACC position.

The outside rearview mirrors automatically fold when the outside rearview mirror folding switch ① is pushed in. To unfold, push the switch again.

⚠ WARNING

Do not drive with the mirrors stored. You will be unable to see behind the vehicle.

⚠ CAUTION

- **Continuously performing the fold/unfold operation of the outside rearview mirror may cause the switch to stop the operation.**
- **Do not touch the mirrors while they are moving. Your hand may be pinched, and the mirror may malfunction.**
- **If the mirrors were folded or unfolded by hand, there is a chance that the mirror will move forward or backward during driving. If the mirrors were folded or unfolded by hand, be sure to adjust them again electrically before driving.**

Automatic fold (if so equipped):

The outside rearview mirrors automatically fold when the doors are locked with the Intelligent Key or the request switch. The mirrors unfold when the doors are unlocked with the Intelligent Key or the request switch, or when the ignition switch is placed in the ON position. For information about disabling the automatic fold function, see "Vehicle Settings" (P.115).

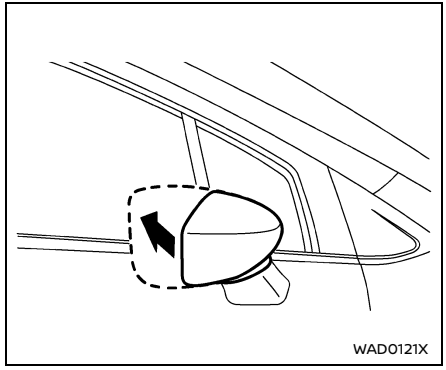

Manual control type:

Fold the outside mirror by pushing it toward the rear of the vehicle.

Reverse tilt-down feature (if so equipped)

When backing up the vehicle, the right and left outside mirrors will turn downward automatically to provide better rear visibility.

1. Push the ignition switch to the ON position.
2. Shift the transmission to the R (Reverse) position.
3. Choose either the right or left outside mirror.
4. The outside mirror surfaces move downward.

When one of the following conditions has occurred, the outside mirror surfaces will return to their original positions.

- The shift position is in any position other than R (Reverse).
- Neither the right nor the left outside mirror is selected.
- The ignition switch is placed into the OFF position.

To disable the function, make sure that neither the right nor the left outside mirror is selected.

The reverse tilt position can be changed. While in R (Reverse), adjust the glass position to the desired location. The next time the vehicle is shifted into R (Reverse), the glass position will go to the newly set position. Additionally, the changed reverse tilt position can be saved to a memory seat position. After the reverse tilt glass position has been changed, vehicle is shifted back into park and glass has returned to the original position, push the Set switch and push the desired memory switch (1 or 2) to assign the new reverse tilt position memory.

Automatic anti-glare (if so equipped)

The outside rearview mirror (for driver's side) is designed so that it automatically changes reflection according to the intensity of the headlights of the vehicle following you.

The anti-glare system will be automatically turned on when you place the ignition switch in the ON position.

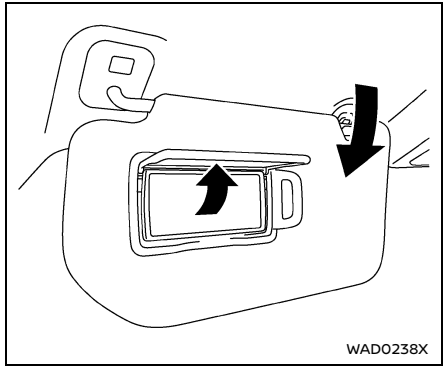

VANITY MIRROR

To use the vanity mirror, pull down the sun visor and pull up the cover.

MEMORY SEAT (if so equipped)

BASIC INFORMATION

The memory seat system has the following features:

- Memory storage function
- Linking the profiled user function to a stored memory position
- Setting memory function

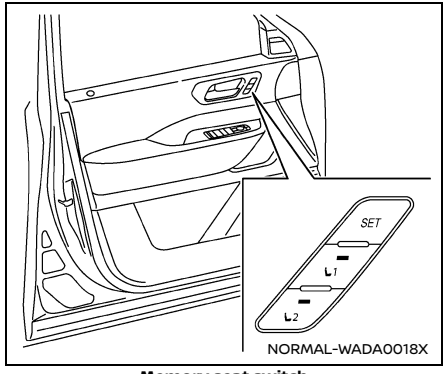

Memory seat switch

MEMORY STORAGE FUNCTION

Basic information

Two positions for the driver's seat, steering wheel and outside mirrors can be stored in the memory switch. Follow these procedures to use the memory system.

1. Adjust the driver's seat, steering wheel and outside mirrors to the desired positions by manually operating each adjusting switch. For additional information, refer to "Seats" (P.17), "Steering wheel" (P.220) and "Outside mirrors" (P.230).
2. Push the SET switch and, within 5 seconds, push the memory switch (1 or 2).
3. The indicator light for the pushed memory switch will come on and stay on for approximately 5 seconds.
4. The chime will sound if the memory has been stored.

NOTE:

- **The memory storage procedure will be canceled if the following operations are performed after the SET switch is pushed:**
  - **Push the ignition switch to start the engine.**
  - **Operate the seat, steering column or the outside mirror.**
- **If a new memory position is stored in the same memory switch, the previous memory position will be overwritten by the new stored position.**

Confirming memory storage

Push the SET switch. If a memory position has been stored in the switch (1 or 2) then the indicator light for the respective switch will stay ON for approximately 5 seconds.

The other switch lights up for a moment and then goes out.

Recalling switch memory positions

NOTE:

For safety, the recall must be performed when the transmission is in the P (Park) position.

To recall the manually stored positions, push the memory switch (1 or 2).

The driver's seat, steering wheel and outside mirrors will move to the positions stored in the memory.

NOTE:
The recalling may not work if certain period of time has passed after the ignition switch is placed in the OFF position.

LINKING THE PROFILED USER FUNCTION TO A STORED MEMORY POSITION

Basic information

The profiled user function can be linked to a stored memory position with the following procedure.

1. Place the ignition switch in the ON position while carrying the Intelligent Key that was registered to the vehicle with a user.

NOTE:
Make sure the single Intelligent Key is inside the vehicle. If multiple keys are inside the vehicle, the vehicle may detect a wrong Intelligent Key.

2. Adjust the position of the driver's seat, steering wheel and outside mirrors. (See "Seats" (P.17), "Steering wheel" (P.220) and "Outside mirrors" (P.230).)
3. Place the ignition switch in the OFF position.

The next time you sign in (selecting the user on the display) after placing the ignition switch in the ON position while carrying the Intelligent Key, the system will automatically adjust to the memorized driving position. (See the separate NissanConnect® Owner's Manual for the profiled user settings.)

Entry/Exit function

This system is designed so that the driver's seat and steering wheel will automatically move when the shift position is in the P (Park) position. This allows the driver to get into and out of the driver's seat more easily.

The driver's seat will slide backward and the steering wheel will move up:

- When the driver's door is opened with the ignition switch placed in the OFF position.
- When the ignition switch is changed from ON to OFF with the driver's door open.

The driver's seat and steering wheel will return to the previous position:

- When the ignition switch is placed in the ON position while the shift position is in the P (Park) position.

The entry/exit function can be canceled through "Vehicle Settings" in the vehicle information display by performing the following:

- Switch the "Exit Seat Slide" or "Exit Steering" from ON to OFF. For additional information, refer to "Vehicle Settings" (P.115).

SETTING MEMORY FUNCTION

The status of the following settings can be linked to the Intelligent Key and the memorized settings can be available for each Intelligent Key.

- Air conditioner system
- Steering wheel position
- Navigation system
- Audio system
- Seat position

To use the memory function, lock the doors with the Intelligent Key that is linked to the settings, and unlock the doors by pushing the driver's door request switch or "UNLOCK" button on the Intelligent Key.

To enable the memorized settings:

1. Carry the Intelligent Key that is linked to the settings, and unlock the doors by pushing the driver's door request switch or "UNLOCK" button on the Intelligent Key.
2. Place the ignition switch in the ON position. The memorized settings are available.

SYSTEM OPERATION

The memory seat system may not start operating or may stop operating under the following conditions:

- When the vehicle speed exceeds approximately 2 MPH (3 km/h).
- When the transmission is moved from P (Park) to any other position.
- When the tilt/telescopic operation lever of the steering wheel is operated.
- When any of the memory switches are pushed while the memory seat system is operating.

4 Monitor, climate, audio, phone and voice recognition systems

NissanConnect® Owner's Manual 237
Safety note 237
Safety information 238
USB memory device, iPod® and Bluetooth® audio player 238
RearView Monitor (if so equipped) 239
- Basic information 239
- RearView Monitor system operation 239
- How to read the displayed lines 240
- Difference between predictive and actual distances 240
- How to park with predictive course lines 242
- RearView Monitor settings 243
- RearView Monitor system limitations 243
- System maintenance 244

Intelligent Around View® Monitor (if so equipped) 245
- Basic information 245
- Intelligent Around View® Monitor system operation 246
- Difference between predictive and actual distances 253
- How to park with predictive course lines 254
- How to switch the display 256
- Adjusting the screen 258
- Setting the vehicle color 258
- Camera widgets 258
- Intelligent Around View® Monitor system limitations 258
- System maintenance 260

Moving Object Detection (MOD) (if so equipped) 261
- Basic information 261
- MOD system operation 261
- Turning MOD on and off 263
- MOD system limitations 263
- System maintenance 264

Ventilators 264
- Center ventilators 264
- Side ventilators 265
- Rear ventilators 265

Heater and air conditioner 265
- Basic information 265
- Automatic air conditioner 266
- Rear automatic air conditioning system 270
- Biometric cooling (if so equipped) 272
- Air conditioner settings 273
- Operating tips 274
- Linking Intelligent Key 274
- In-cabin microfilter 274

Servicing climate control ... 274
Driving recorder (if so equipped) ... 274
Basic information ... 274
Precautions of the driving recorder ... 275
About microSD card ... 276
About copyright ... 277
Driving recorder system interface ... 277
Informational icons ... 279
File menu ... 280
In Car Camera menu ... 281
Driving recorder settings ... 282
Features available in MyNISSAN app ... 282
Radio approval information ... 282
Antenna ... 283
Window antenna ... 283
Satellite radio antenna ... 283
Global Navigation Satellite System (GNSS) antenna (for ProPILOT Assist 2.1) (if so equipped) ... 284
Car phone or CB radio ... 284

NISSANCONNECT® OWNER'S MANUAL



QR code (U.S. only)

For models equipped with the NissanConnect® system, please refer to your printed NissanConnect® Owner's Manual (if so equipped), or scan the QR code for quick access to the full digital version of the manual, along with other helpful guides related to your vehicle.

This manual includes the following information.

Available functions may vary depending on the models and specifications.

- Navigation system
- Audio system
- Bluetooth® Hands-Free Phone System
- Apple CarPlay®
- Android Auto™
- NissanConnect® Services
- SiriusXM® Radio
- Apps menu
- Other settings
- Voice recognition
- General system information

SAFETY NOTE

⚠ WARNING

- **Do not disassemble or modify this system. If you do, it may result in accidents, fire, or electric shock.**
- **Do not use this system if you notice any abnormality, such as a frozen screen or lack of sound. Continued use of the system may result in accident, fire or electric shock.**
- **In case you notice any foreign object in the system hardware, spill liquid on it, or notice smoke or smell coming from it, stop using the system immediately. It is recommended you visit a NISSAN dealer for servicing. Ignoring such conditions may lead to accidents, fire, or electric shock.**
- **Park the vehicle in a safe location and apply the parking brake to view the images on the touch screen display.**

Do not attempt to operate the system in extreme temperature conditions [below −4°F (−20°C) and above 158°F (70°C)]. Operating this system under these conditions may result in system malfunctions.

⚠ WARNING

- **To operate the system, first park the vehicle in a safe location and set the parking brake. Operating the system while driving can distract the driver and may result in a serious accident.**
- **Exercise extreme caution at all times so full attention may be given to vehicle operation. If the system does not respond immediately, please be patient and keep your eyes on the road. Inattentive driving may lead to a crash resulting in serious injuries or death.**
- **Laws in some jurisdictions may restrict the use of some of the applications and features such as "Text-to-Speech", social networking, and texting. Check local regulations for any requirements before using this feature.**
- **To avoid risk of death or serious personal injury when parking the vehicle with the engine turned on, it should be kept in a well-ventilated area to avoid exposure to carbon monoxide. Do not breathe exhaust gases; they contain colorless and odorless carbon monoxide. Carbon monoxide is dangerous. It can cause unconsciousness or death.**
  - **Apply the parking brake.**
  - **Do not allow children, pets or people who may need assistance to remain in the vehicle.**
  - **Do not leave the vehicle unattended to prevent unauthorized use of the vehicle.**

⚠ WARNING

Do not connect, disconnect or operate the USB device while driving. Doing so can be a distraction. If distracted you could lose control of your vehicle and cause an accident or serious injury.

REARVIEW MONITOR (if so equipped)

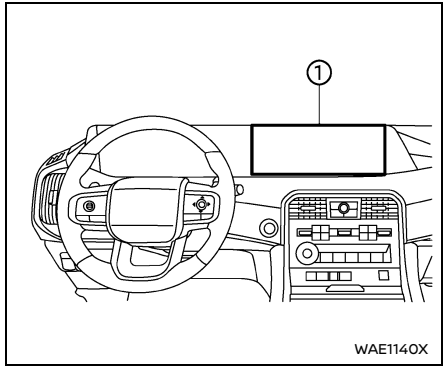

① Touch screen display

BASIC INFORMATION

⚠ WARNING

- **Failure to follow the warnings and instructions for proper use of the RearView Monitor could result in serious injury or death.**
- **RearView Monitor is a convenience feature and is not a substitute for proper backing. Always turn and look out the windows, and check mirrors to be sure that it is safe to move before operating the vehicle. Always back up slowly.**
- **The system is designed as an aid to the driver in showing large stationary objects directly behind the vehicle, to help avoid damaging the vehicle.**
- **The distance guide line and the vehicle width line should be used as a reference only when the vehicle is on a level paved surface. The distance viewed on the monitor is for reference only and may be different than the actual distance between the vehicle and displayed objects.**

⚠ CAUTION

Do not scratch the camera lens when cleaning dirt or snow from the front of the camera.

The RearView Monitor system automatically shows a rear view of the vehicle when the transmission is placed in the R (Reverse) position.
The radio can still be heard while the RearView Monitor is active.

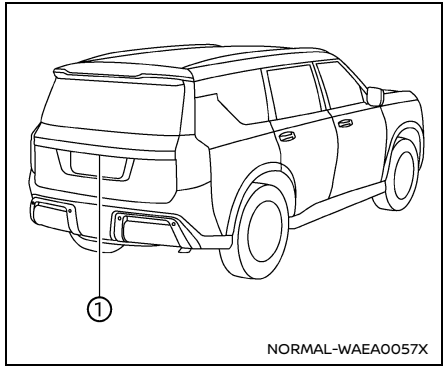

To display the rear view, the RearView Monitor system uses a camera ① located just above the vehicle's license plate.

REARVIEW MONITOR SYSTEM OPERATION

When the ignition switch is placed in the ON position, shift the transmission to the R (Reverse) position to operate the RearView Monitor.

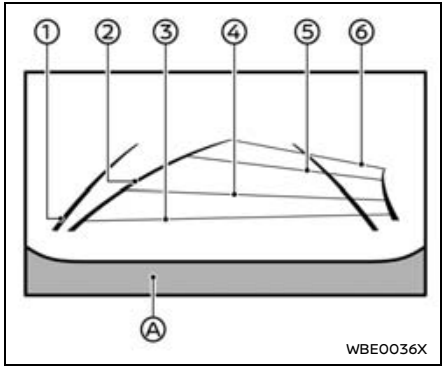

HOW TO READ THE DISPLAYED LINES

Guiding lines which indicate the vehicle width and distances to objects with reference to the bumper line Ⓐ are displayed on the monitor.

Vehicle width guide lines ①:

Indicate the vehicle width when backing up.

Predictive course lines ②:

Indicate the predictive course when backing up. The predictive course lines will be displayed on the monitor when the transmission is shifted to the R (Reverse) position and if the steering wheel is turned.

The vehicle width guide lines and the width of the predictive course lines are wider than the actual width and course.

Distance guide lines:

Indicate distances from the vehicle body.

- Red line ③: approximately 1.5 ft (0.5 m)
- Blue line ④: approximately 3 ft (1 m)
- Blue line ⑤: approximately 7 ft (2 m)
- Blue line ⑥: approximately 10 ft (3 m)

DIFFERENCE BETWEEN PREDICTIVE AND ACTUAL DISTANCES

Basic information

The displayed guide lines and their locations on the ground are for approximate reference only. Objects on uphill or downhill surfaces or projecting objects will be actually located at distances different from those displayed in the monitor relative to the guide lines (refer to illustrations). When in doubt, turn around and view the objects as you are backing up, or park and exit the vehicle to view the positioning of objects behind the vehicle.

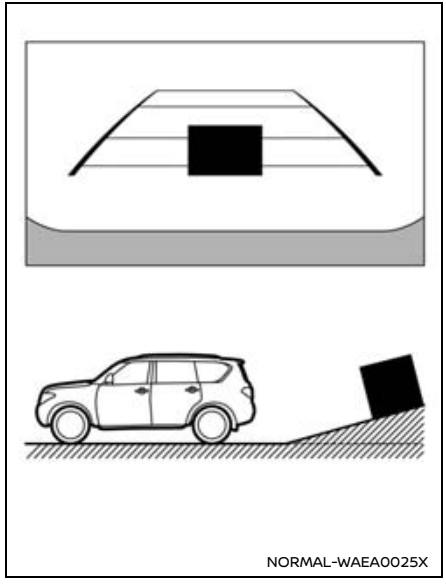

Backing up on a steep uphill

When backing up the vehicle up a hill, the distance guide lines and the vehicle width guide lines are shown closer than the actual distance. Note that any object on the hill is farther than it appears on the monitor.

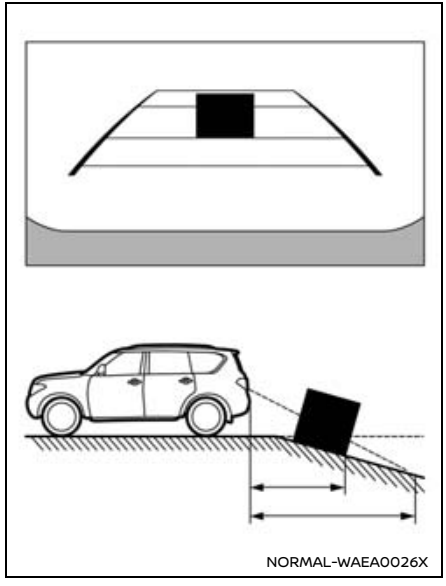

Backing up on a steep downhill

When backing up the vehicle down a hill, the distance guide lines and the vehicle width guide lines are shown farther than the actual distance. Note that any object on the hill is closer than it appears on the monitor.

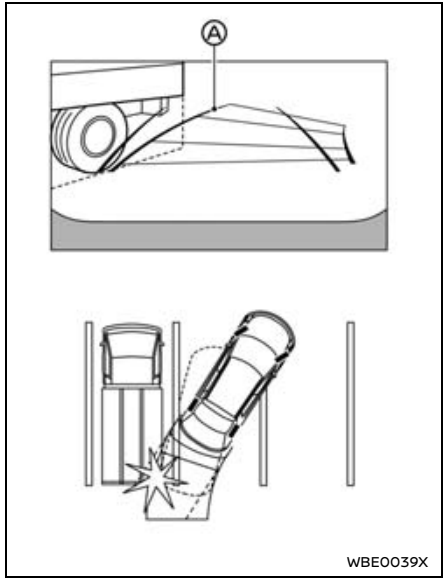

Backing up near a projecting object

The predictive course lines Ⓐ do not touch the object in the display. However, the vehicle may hit the object if it projects over the actual backing up course.

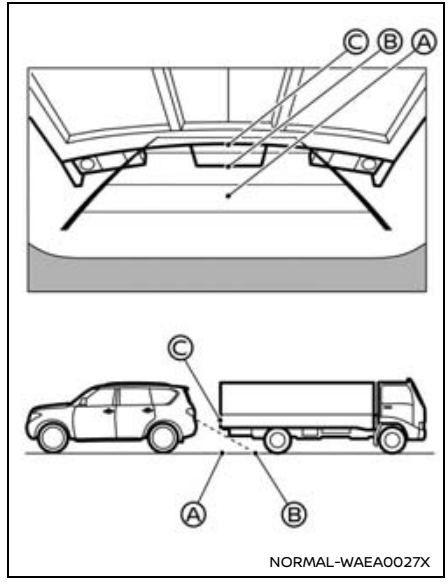

Backing up behind a projecting object

The position Ⓒ is shown farther than the position Ⓑ in the display. However, the position Ⓒ is actually at the same distance as the position Ⓐ. The vehicle may hit the object when backing up to the position Ⓐ if the object projects over the actual backing up

course.

HOW TO PARK WITH PREDICTIVE COURSE LINES

⚠ WARNING

- **If the tires are replaced with different sized tires, the predictive course lines may be displayed incorrectly.**
- **On a snow-covered or slippery road, there may be a difference between the predictive course line and the actual course line.**
- **If the battery is disconnected or becomes discharged, the predictive course lines may be displayed incorrectly. If this occurs, please perform the following procedures:**
  - **Turn the steering wheel from lock to lock while the engine is running.**
  - **Drive the vehicle on a straight road for more than 5 minutes.**
- **When the steering wheel is turned with the ignition switch in the ON position, the predictive course lines may be displayed incorrectly.**

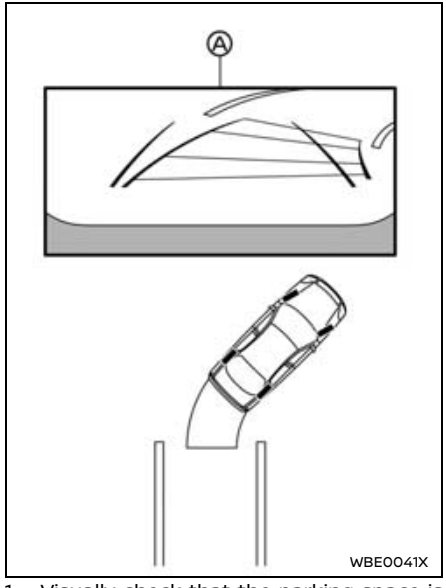

1. Visually check that the parking space is safe before parking your vehicle.
2. The rear view of the vehicle is displayed on the screen Ⓐ when the transmission is shifted to the R (Reverse) position.

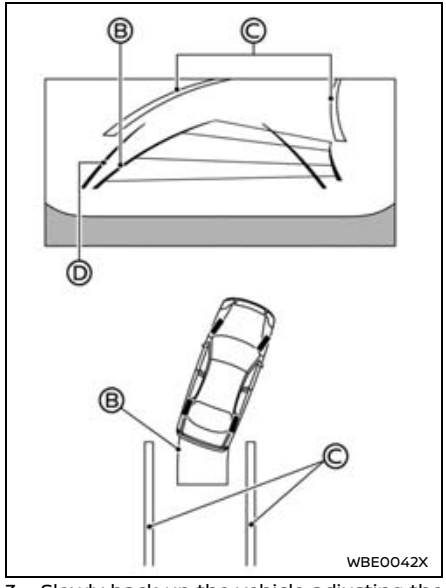

3. Slowly back up the vehicle adjusting the steering wheel so that the predictive course lines Ⓑ enter the parking space Ⓒ.
4. Maneuver the steering wheel to make the vehicle width guide lines Ⓓ parallel to the parking space Ⓒ while referring to the predictive course lines.
5. When the vehicle is parked in the space completely, place the shift position to the

P (Park) position and apply the parking brake.

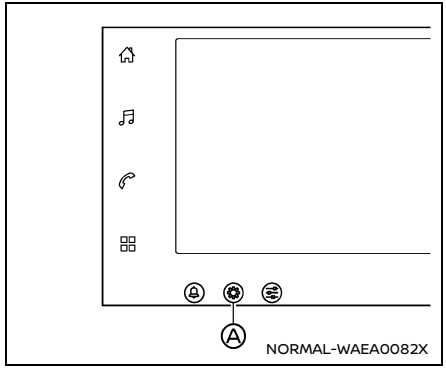

REARVIEW MONITOR SETTINGS

1. Touch " ⌂ " key on the touch screen display.
2. Touch " ⚙ " key Ⓐ.
3. Touch "Vehicle" key.
4. Touch "Camera" key.

Available setting items:

- Predictive course line
  Predictive course lines can be turned on/off.
- Display setting
  The brightness, contrast, tint, color and black level can be adjusted.

REARVIEW MONITOR SYSTEM LIMITATIONS

⚠ WARNING

Listed below are the system limitations for RearView Monitor. Failure to operate the vehicle in accordance with these system limitations could result in serious injury or death.

- **The system cannot completely eliminate blind spots and may not show every object.**
- **Underneath the bumper and the corner areas of the bumper cannot be viewed on the RearView Monitor because of its monitoring range limitation. The system will not show small objects below the bumper, and may not show objects close to the bumper or on the ground.**
- **Objects viewed in the RearView Monitor differ from actual distance because a wide-angle lens is used.**
- **Objects in the RearView Monitor will appear visually opposite compared to when viewed in the rearview and outside mirrors.**
- **Use the displayed lines as a reference. The lines are highly affected by the number of occupants, vehicle position, road conditions and road grade.**

- **Make sure that the liftgate is securely closed when backing up.**
- **Do not put anything on the rear view camera. The rear view camera is installed above the license plate.**
- **When washing the vehicle with high-pressure water, be sure not to spray it around the camera. Otherwise, water may enter the camera unit causing water condensation on the lens, a malfunction, fire or an electric shock.**
- **Do not strike the camera. It is a precision instrument. Otherwise, it may malfunction or cause damage resulting in a fire or an electric shock.**

The following are operating limitations and do not represent a system malfunction:

- When the temperature is extremely high or low, the screen may not clearly display objects.
- When strong light directly shines on the camera, objects may not be displayed clearly.
- Vertical lines may be seen in objects on the screen. This is due to strong reflected light from the bumper.
- The screen may flicker under fluorescent light.
- The colors of objects on the RearView Monitor may differ somewhat from the actual color of objects.
- Objects on the monitor may not be clear in a dark environment.
- There may be a delay when switching between views.
- If dirt, rain or snow accumulates on the camera, the RearView Monitor may not display objects clearly. Clean the camera.
- Do not use wax on the camera lens. Wipe off any wax with a clean cloth dampened with a diluted mild cleaning agent, then wipe with a dry cloth.

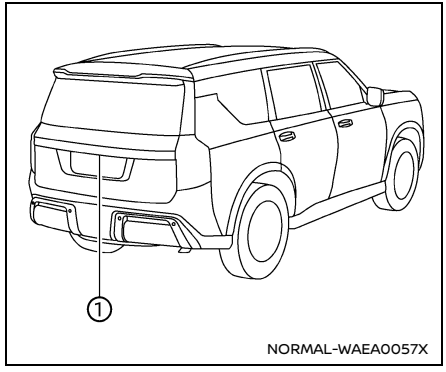

SYSTEM MAINTENANCE

⚠ CAUTION

- **Do not use alcohol, benzine or thinner to clean the camera. This will cause discoloration.**
- **Do not damage the camera as the monitor screen may be adversely affected.**

If dirt, rain or snow accumulates on the camera ①, RearView Monitor may not display objects clearly. Clean the camera by wiping it with a cloth dampened with a diluted mild cleaning agent and then wiping it with a dry cloth.

INTELLIGENT AROUND VIEW® MONITOR (if so equipped)

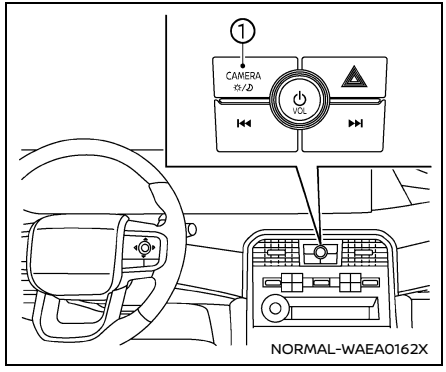

① CAMERA/☼/◑ button

BASIC INFORMATION

⚠ WARNING

- **Failure to follow the warnings and instructions for the proper use of the Intelligent Around View® Monitor system could result in serious injury or death.**
- **The Intelligent Around View® Monitor is a convenience feature and is not a substitute for proper vehicle operation because it has areas where objects cannot be viewed. The four corners of the vehicle in particular, are areas where objects do not always appear in the bird's-eye, front, rear, 3D, Invisible Hood, Ultra Wide and rear zoom views. Always check your surroundings to be sure that it is safe to move before operating the vehicle. Always operate the vehicle slowly.**
- **The driver is always responsible for safety during parking and other maneuvers.**

⚠ CAUTION

Do not scratch the lens when cleaning dirt or snow from the front of the camera.

The Intelligent Around View® Monitor system is designed as an aid to the driver in situations such as slot parking or parallel parking.

The monitor displays various views of the position of the vehicle in a split screen format. Not all views are available at all times.

Available views:

- Front view
  A view of the front of the vehicle
- Rear view
  A view of the rear of the vehicle
- Bird's-eye view
  The surrounding view of the vehicle from above
- Front-side view
  The view around and ahead of the driver's side and the front passenger's side wheel
- Front-wide view
  A wider area view of the front view
- Rear-wide view
  A wider area view of the rear view
- 3D view
  A 360-degree view around the vehicle
- Invisible Hood View
  A view of the front of the vehicle with the transparent engine hood
- Ultra Wide view
  A huge field of vision across both the vehicle information display and the touch screen display for the front-wide view and the Invisible Hood View
- Rear zoom view
  An enlarged view of the rear of the vehicle

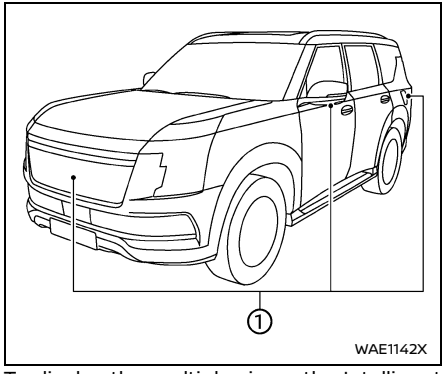

To display the multiple views, the Intelligent Around View® Monitor system uses cameras ① located on the front grille, on the vehicle's outside mirrors and one just above the vehicle's rear license plate.

INTELLIGENT AROUND VIEW® MONITOR SYSTEM OPERATION

Basic information

When the ignition switch is placed in the ON position, push the CAMERA/☀/☽ button or shift the transmission to the R (Reverse) position to operate the Intelligent Around View® Monitor.

The screen displayed on the Intelligent Around View® Monitor will automatically return to the previous screen 3 minutes after the CAMERA/☀/☽ button has been pushed with the transmission in a position other than the R (Reverse) position.

Available views

⚠ WARNING

- **The distance guide lines and the vehicle width guide lines should be used as a reference only when the vehicle is on a paved, level surface. The apparent distance viewed on the monitor may be different than the actual distance between the vehicle and displayed objects.**
- **Use the displayed lines and the bird's-eye view as a reference. The lines and the bird's-eye view are greatly affected by the number of occupants, fuel level, vehicle position, road condition and road grade.**
- **If the tires are replaced with different sized tires, the predictive course lines and the bird's-eye view may be displayed incorrectly.**
- **When driving the vehicle up a hill, objects viewed in the monitor are farther than they appear. When driving the vehicle down a hill, objects viewed in the monitor are closer than they appear.**
- **Objects in the rear view will appear visually opposite compared to when viewed in the rearview and outside mirrors.**
- **Use the mirrors or actually look to properly judge distances to other objects.**
- **The distance between objects viewed in the rear view differs from actual distance because a wide-angle lens is used.**
- **On a snow-covered or slippery road, there may be a difference between the predictive course line and the actual course line.**
- **The vehicle width and predictive course lines are wider than the actual width and course.**

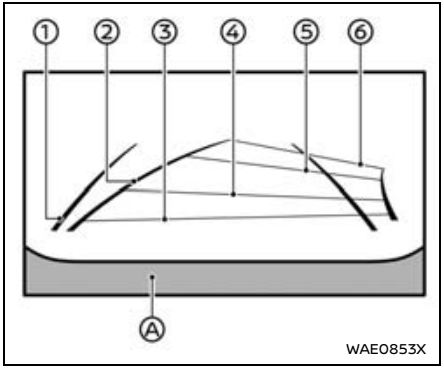

Front view

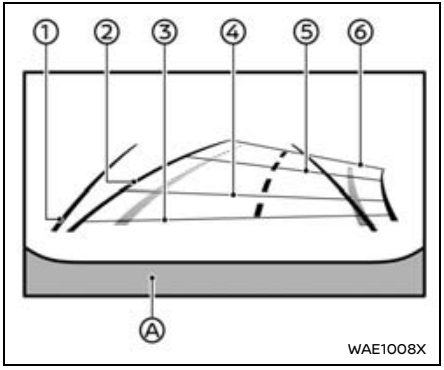

Rear view

Front and rear view:

Guiding lines that indicate the approximate vehicle width and distances to objects with reference to the vehicle body line Ⓐ, are displayed on the monitor.

Vehicle width guide lines ①:

Indicate the vehicle width.

Predictive course lines ②:

Indicate the predictive course when operating the vehicle. The predictive course lines will move depending on how much the steering wheel is turned.

Distance guide lines:

Indicate distances from the vehicle body.

- Red line ③: approximately 1.5 ft (0.5 m)
- Blue line ④: approximately 3 ft (1 m)
- Blue line ⑤: approximately 7 ft (2 m)
- Blue line ⑥: approximately 10 ft (3 m)

The front view will not be displayed when the vehicle speed is above 12 MPH (20 km/h).

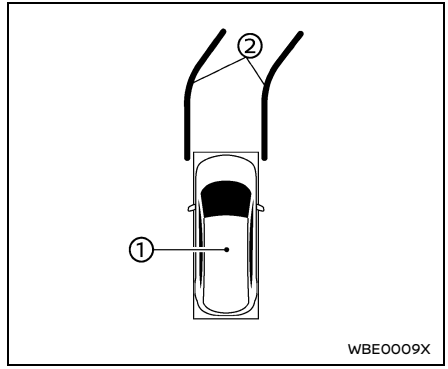

Example

Bird's-eye view:

The bird's-eye view shows the overhead view of the vehicle which helps confirm the vehicle position and the predictive course to a parking space.

The vehicle icon ① shows the position of the vehicle. Note that the distance between objects viewed in the bird's-eye view differs from the actual distance.

The predictive course lines ② indicate the predicted course when operating the vehicle.

⚠ WARNING

- **Objects in the bird's-eye view will appear farther than the actual distance.**
- **Tall objects, such as a curb or vehicle, may be misaligned or not displayed at the seam of the views.**
- **Objects that are above the camera cannot be displayed.**
- **The view for the bird's-eye view may be misaligned when the camera position alters.**
- **A line on the ground may be misaligned and is not seen as being straight at the seam of the views. The misalignment will increase as the line proceeds away from the vehicle.**

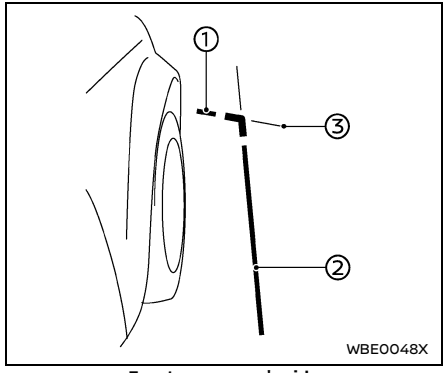

Front passenger's side

Front-side view:

Guiding lines:

Guiding lines that indicate the approximate width and the front end of the vehicle (both the driver's and front passenger's sides) are displayed on the monitor.

The front-of-vehicle line ① shows the front part of the vehicle.

The side-of-vehicle line ② shows the vehicle width including the outside mirrors.

The extensions ③ of both the front ① and side ② lines are shown with a blue line.

⚠ CAUTION

The turn signal light may look like the side-of-vehicle line. This is not a malfunction.

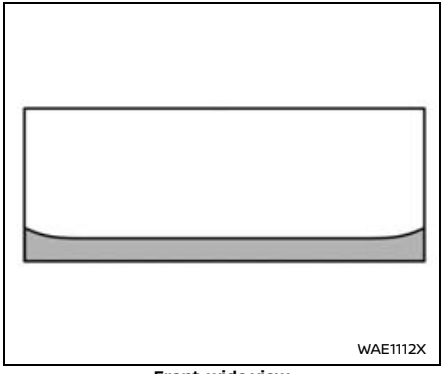

Front-wide view

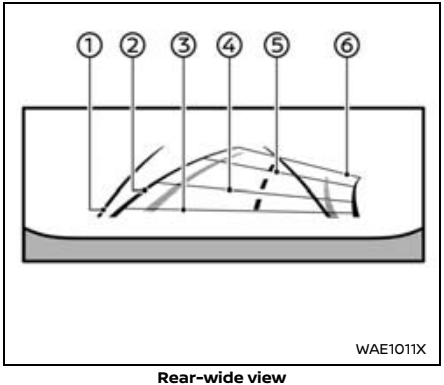

Rear-wide view

Front-wide/rear-wide view:

While the front view/rear view shows a normal view on the split screens, the front-wide view/rear-wide view shows a wider area on the entire screen and allows checking of the blind corners on the right and left sides.

Vehicle width guide lines ① :

Indicate the approximate vehicle width.

Predictive course lines ② :

Indicate the predictive course when operating the vehicle. The predictive course lines will move depending on how much the steering wheel is turned.

Distance guide lines:

Indicate distances from the vehicle body.

- Red line ③ : approximately 1.5 ft (0.5 m)
- Blue line ④ : approximately 3 ft (1 m)
- Blue line ⑤ : approximately 7 ft (2 m)
- Blue line ⑥ : approximately 10 ft (3 m)

The front-wide view will not be displayed when the vehicle speed is above 12 MPH (20 km/h).

Saved Locations:

You can save the points where the front-wide view will automatically pop up. This can be useful when the driver needs to check the blind corners at intersections with poor visibility, for example.

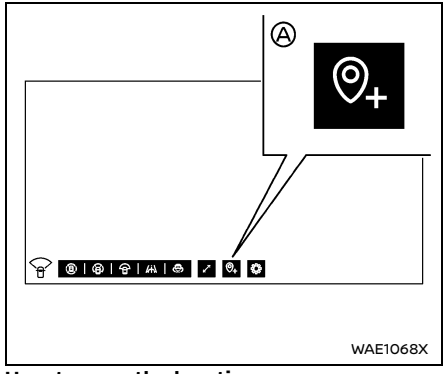

How to save the location:

When the camera screen is displayed, touch Ⓐ key.

See "Camera" (P.143) for more information.

Towing mode (if so equipped)

When the TOW mode has been selected in the Drive Mode Selector, the rear view continues to be displayed if the transmission has shifted out from the R (Reverse) position. If one of the following condition is met, the rear view will be canceled.

- Vehicle speed exceeds 6 MPH (10 km/h)
- 8 seconds have passed
- Vehicle moves forward more than 26 feet (8 m)

See "Drive Mode Selector (if so equipped)" (P.312) for the details of TOW mode.

4WD mode (if so equipped)

While the transmission is not in the R (Reverse) position, when the "4H" or "4L" (if so equipped) is selected in the NISSAN All-Mode 4WD®, the Invisible Hood View will automatically be displayed. If the vehicle speed exceeds 12 MPH (20 km/h), the view screen display will be canceled. If the vehicle speed decreased slower than 10 MPH (16 km/h), the view screen will be displayed again.

See "NISSAN All-Mode 4WD® (if so equipped)" (P.407) for the details of the 4WD system.

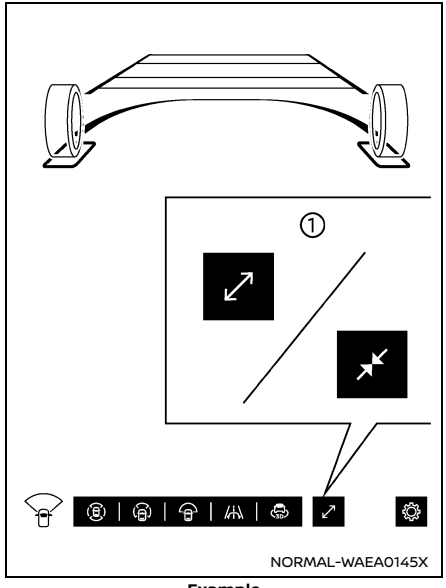

Example

Ultra Wide view

The Ultra Wide view provides the driver with a huge field of vision across both the vehicle information display and the touch screen display. The Ultra Wide view can be used for the front-wide view and the Invisible Hood View.

How to turn ON/OFF the Ultra Wide view:

When the camera screen is displayed, touch ① icon to activate or deactivate the Ultra Wide view.

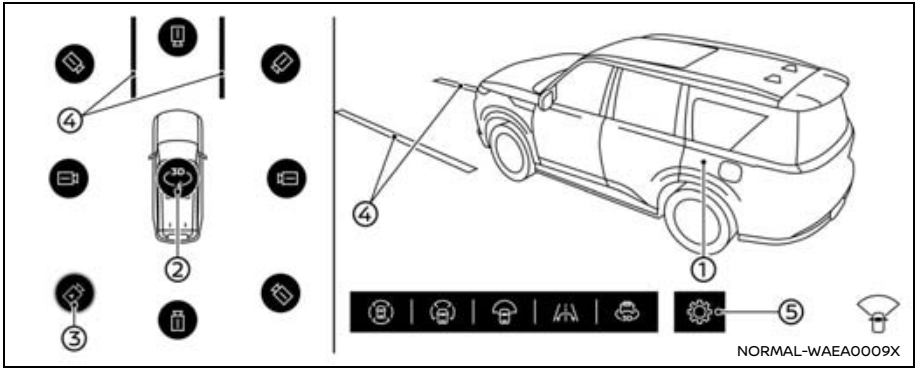

3D view

The 3D view shows the 360-degree view around the vehicle which helps confirm the vehicle position and the predictive course to a parking space.

When touching the rotation icon ②, the vehicle image ① and the surrounding area image will pop up and turn 360° to check the vehicle surroundings.

The vehicle image can also be rotated by swiping the vehicle image itself (if so equipped).

8 different camera directions can be selected by touching the camera position icon ③.

When the vehicle speed exceeds 10 MPH (16 km/h), the three cameras that are shooting in the direction of travel can only be selected.

The predictive course lines ④ indicate the predicted course when operating the vehicle.

⚠ WARNING

- **The distance between objects viewed in the view differs from the actual distance.**
- **There are some areas where the system will not show objects. See "Intelligent Around View® Monitor system limitations" (P.258) for more details.**

Automatic 360° Moving:

When you push the CAMERA/☀/☽ button at the first time after the ignition switch has been placed in the ON position, the vehicle image and the surrounding area image will pop up and turn 360° automatically (Auto 360° Moving) to check the vehicle surroundings.

How to turn ON/OFF the Auto 360° Moving feature

When the camera screen is displayed, touch ⑤ to open the "Settings" menu, then select "Automatic 360° Moving" and enable or disable this feature.

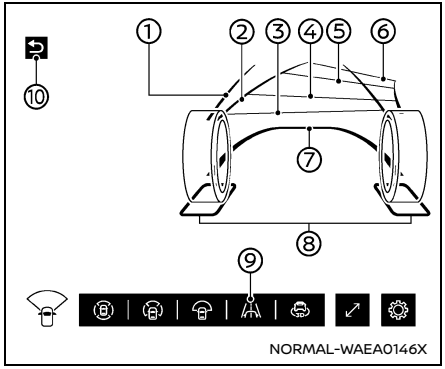

Example

Invisible Hood View

The Invisible Hood View allows user to see the road surface underneath the virtually transparent vehicle body. This may be useful for aligning the front wheels with the rails of the automatic car wash, or help to avoid hitting the side of the vehicle against curbs when operating at low speeds, for example.

NOTE:
The image of the road surface under the body is a composite from the front camera images, and does not actually show the road surface under the vehicle body.

Vehicle width guide lines ①:
Indicate the approximate vehicle width.

Predictive course lines ②:
Indicate the predictive course when operating the vehicle. The predictive course lines will move depending on how much the steering wheel is turned.

Distance guide lines:
Indicate distances from the vehicle body.

- Red line ③: approximately 1.5 ft (0.5 m)
- Blue line ④: approximately 3 ft (1 m)
- Blue line ⑤: approximately 7 ft (2 m)
- Blue line ⑥: approximately 10 ft (3 m)

The Invisible Hood View will not be displayed when the vehicle speed is above 12 MPH (20 km/h).

Vehicle outline ⑦:
Indicates the vehicle outline of the front area.

Wheel area lines ⑧:
Indicate the wheel outlines of the front wheels.

How to turn ON/OFF the Invisible Hood View:

When the camera screen is displayed, touch ⑨ icon to activate the Invisible Hood View. To deactivate the Invisible Hood View, select other camera view or touch the return key ⑩.

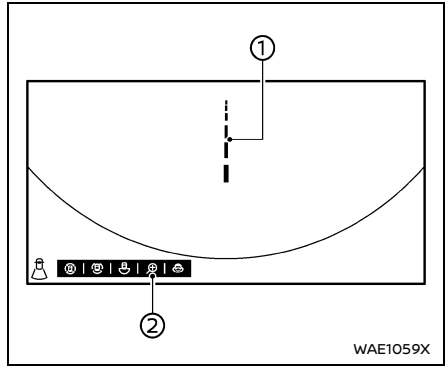

Rear zoom view

The rear zoom view shows an enlarged portion of the rear ground area. This provides a clear limited rear view with the predictive center line, that can be useful when docking a trailer to the vehicle, for example.

Predictive center line ①:
Indicate the predictive center line of the vehicle.

How to turn ON/OFF the rear zoom view:

When the camera screen is displayed, touch icon ② to activate the rear zoom view. To deactivate the rear zoom view, select other camera view or touch the return key on the left corner of the screen.

DIFFERENCE BETWEEN PREDICTIVE AND ACTUAL DISTANCES

Basic information

The displayed guide lines and their locations on the ground are for approximate reference only. Objects on uphill or downhill surfaces or projecting objects will be actually located at distances different from those displayed in the monitor relative to the guide lines (refer to illustrations). When in doubt, turn around and view the objects as you are backing up, or park and exit the vehicle to view the positioning of objects behind the vehicle.

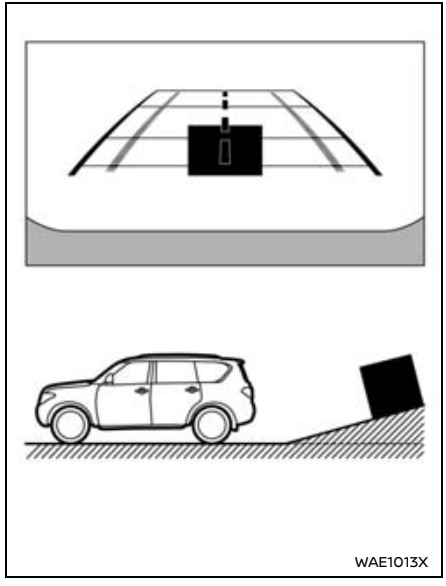

Backing up on a steep uphill

When backing up the vehicle up a hill, the distance guide lines and the vehicle width guide lines are shown closer than the actual distance. Note that any object on the hill is farther than it appears on the monitor.

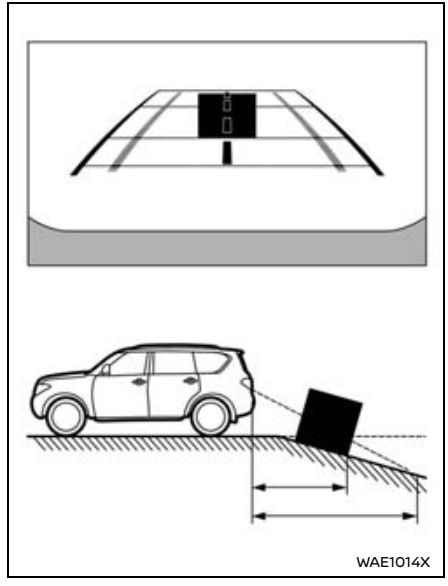

Backing up on a steep downhill

When backing up the vehicle down a hill, the distance guide lines and the vehicle width guide lines are shown farther than the actual distance. Note that any object on the hill is closer than it appears on the monitor.

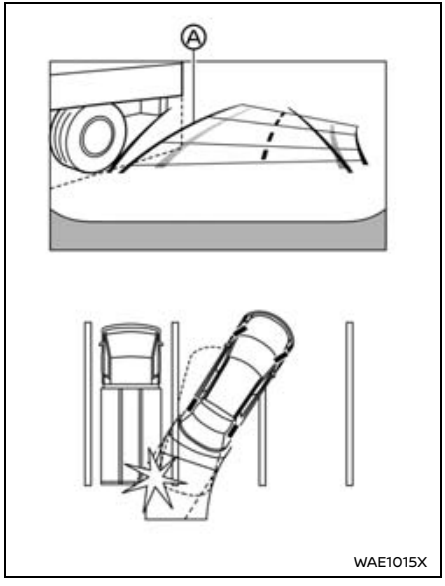

Backing up near a projecting object

The predictive course lines Ⓐ do not touch the object in the display. However, the vehicle may hit the object if it projects over the actual backing up course.

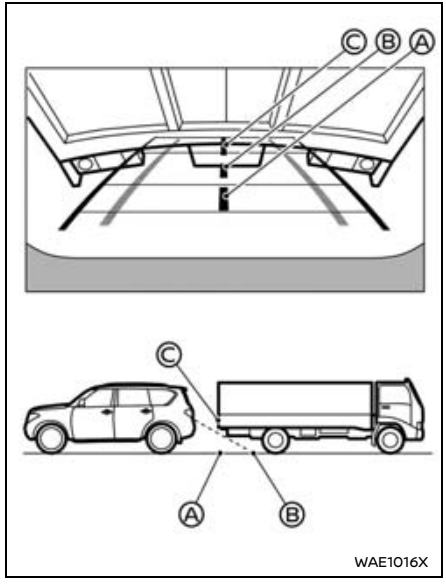

Backing up behind a projecting object

The position Ⓒ is shown farther than the position Ⓑ in the display. However, the position Ⓒ is actually at the same distance as the position Ⓐ. The vehicle may hit the object when backing up to the position Ⓐ if the object projects over the actual moving course.

HOW TO PARK WITH PREDICTIVE COURSE LINES

Basic information

⚠ WARNING

- **If the tires are replaced with different sized tires, the predictive course lines may be displayed incorrectly.**
- **On a snow-covered or slippery road, there may be a difference between the predictive course line and the actual course line.**
- **If the battery is disconnected or becomes discharged, the predictive course lines may be displayed incorrectly. If this occurs, please perform the following procedures:**
  - **Turn the steering wheel from lock to lock while the engine is running.**
  - **Drive the vehicle on a straight road for more than 5 minutes.**
- **When the steering wheel is turned with the ignition switch in the ON position, the predictive course lines may be displayed incorrectly.**

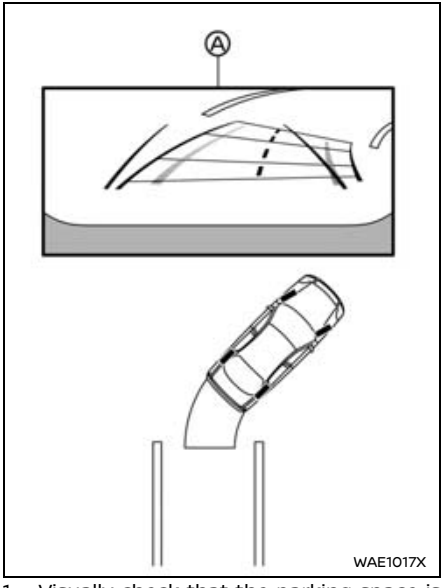

1. Visually check that the parking space is safe before parking your vehicle.
2. The rear view of the vehicle is displayed on the screen Ⓐ when the transmission is shifted to the R (Reverse) position.

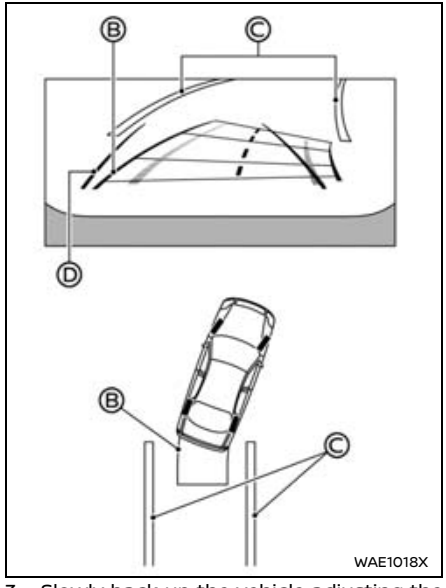

3. Slowly back up the vehicle adjusting the steering wheel so that the predictive course lines Ⓑ enter the parking space Ⓒ.
4. Maneuver the steering wheel to make the vehicle width guide lines Ⓓ parallel to the parking space Ⓒ while referring to the predictive course lines.
5. When the vehicle is parked in the space completely, place the shift position in the P (Park) position and apply the parking brake.

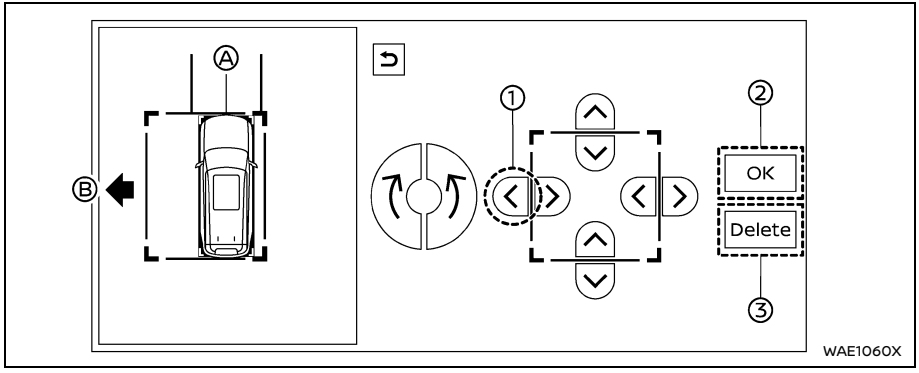

Example

My Parking Locations (if so equipped)

My Parking Locations allows driver to ensure that there is enough space to open the door at your usual parking spot, such as your home garage.

How to register the parking location:

After parking the vehicle in the correct parking position, perform the following procedures.

1. Push "CAMERA/☀/☽" button
2. Touch ⚙ to display "Settings" menu.
3. Touch "My Parking Locations" menu.
4. Touch your preferable parking location from the list, then touch "Register".

How to adjust the parking space frame:

Touch the arrow keys displayed on the screen to adjust the parking space frame Ⓐ.

For example, touch the ① key to expand the parking spot frame toward Ⓑ. When the adjustment has been completed, touch ② to register the parking spot.

To clear the registered parking space frame, touch ③.

After the registration, the display view will switch and the parking guide will appear automatically when the vehicle approaches to the registered parking spot and you select the transmission R (Reverse) position to display the bird's-eye view.

HOW TO SWITCH THE DISPLAY

With the ignition switch placed in the ON position, push the CAMERA/☀/☽ button or shift the transmission to the R (Reverse) position to operate the Intelligent Around View® Monitor.

The Intelligent Around View® Monitor displays different split screen views depending on the position of the transmission. Push the CAMERA/☀/☽ button or touch the screen icon at the bottom of the display to switch between the available views.

If the transmission is in the R (Reverse) position, the available views are:

- Rear view/bird's-eye view split screen
- Rear view/front-side view split screen
- Rear-wide view
- Rear zoom view

3D view is not available in the R (Reverse) position.

If the transmission is out of the R (Reverse) position, the available views are:

- Front view/bird's-eye view split screen
- Front view/front-side view split screen
- Front-wide view
- Invisible Hood View
- 3D view (touch the screen icon)
- Ultra Wide view

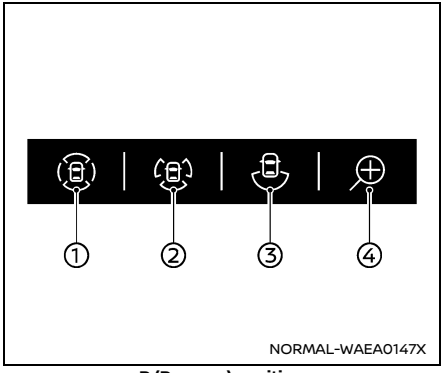

R (Reverse) position

① Bird's-eye view (with rear view)
② Front side view (with rear view)
③ Rear-wide view
④ Rear zoom view

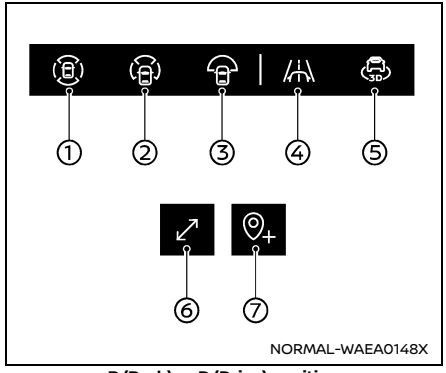

P (Park) or D (Drive) position

① Bird's-eye view (with front view)
② Front side view (with front view)
③ Front-wide view
④ Invisible Hood View
⑤ 3D view
⑥ Expand/contract (for Ultra Wide view)
⑦ Save Location (for front-wide view pop-up)

Available views/icons may vary depending on the conditions.

The display will switch from the 3D Around View® Monitor screen when:

- The transmission is in the D (Drive) position and the vehicle speed increases above approximately 12 MPH (20 km/h).
- A different screen is selected.
- 3 minutes have passed without doing any operation.

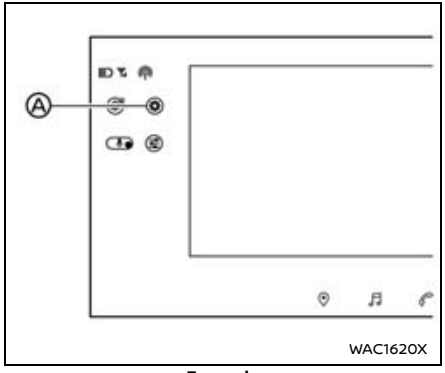

Example

ADJUSTING THE SCREEN

1. Touch " ⚙ " key Ⓐ on the touch screen display.
2. Touch "Vehicle" key.
3. Touch "Camera" key.
4. Touch "Display Settings" key.
5. Touch the "+" or "-" key of the desired item on the touch screen display. You can change the brightness, contrast, tint, color, and black level.

The "Display Settings" key can also be selected directly on the Intelligent Around View® Monitor display by touching " ⚙ " key.

NOTE:
Do not adjust the display settings of the Intelligent Around View® Monitor while the vehicle is moving. Make sure the parking brake is firmly applied.

SETTING THE VEHICLE COLOR

The color of the vehicle shown on the bird's-eye view and the 3D view can be changed. To change the color, perform the following operation.

1. Push the CAMERA/☀/🌙 button.
2. Select a view while the transmission is not in the R (Reverse) position.
3. Touch " ⚙ " key on the touch screen display.
4. Touch the "Vehicle Color" key.
5. Touch the desired color.

CAMERA WIDGETS

The camera-related widgets can be set on the home menu screen of the touch screen display. See the separate NissanConnect® Owner's Manual for more details about customizing the home menu screen.

INTELLIGENT AROUND VIEW® MONITOR SYSTEM LIMITATIONS

Basic information

⚠ WARNING

Listed below are the system limitations for Intelligent Around View® Monitor. Failure to operate the vehicle in accordance with these system limitations could result in serious injury or death.

- **Do not use the Intelligent Around View® Monitor with the outside mirrors in the stored position, and make sure that the liftgate is securely closed when operating the vehicle using the Intelligent Around View® Monitor.**
- **The apparent distance between objects viewed on the Intelligent Around View® Monitor differs from the actual distance.**
- **The cameras are installed on the front grille, the outside mirrors and above the rear license plate. Do not put anything on the cameras.**
- **When washing the vehicle with high pressure water, be sure not to spray it around the cameras. Otherwise, water may enter the camera unit causing water condensation on the lens, a malfunction, fire or an electric shock.**

- **Do not strike the cameras. They are precision instruments. Doing so could cause a malfunction or cause damage resulting in a fire or an electric shock.**

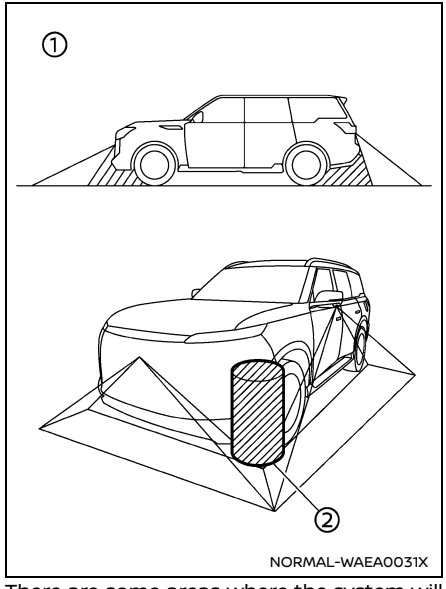

There are some areas where the system will not show objects and the system does not warn of moving objects. When in the front or the rear view display, an object below the bumper or on the ground may not be viewed ①. When in the bird's-eye view, a tall object near the seam ② of the camera viewing areas will not appear in the monitor.

The following are operating limitations and do not represent a system malfunction:

- There may be a delay when switching between views.
- When the temperature is extremely high or low, the screen may not display objects clearly.
- When strong light directly shines on the camera, objects may not be displayed clearly.
- The screen may flicker under fluorescent light.
- The colors of objects on the Intelligent Around View® Monitor may differ somewhat from the actual color of objects.
- Objects on the Intelligent Around View® Monitor may not be clear and the color of the object may differ in a dark environment.
- There may be differences in sharpness between each camera view of the bird's-eye view.
- Do not use wax on the camera lens. Wipe off any wax with a clean cloth that has been dampened with a diluted mild cleaning agent, then wipe with a dry cloth.

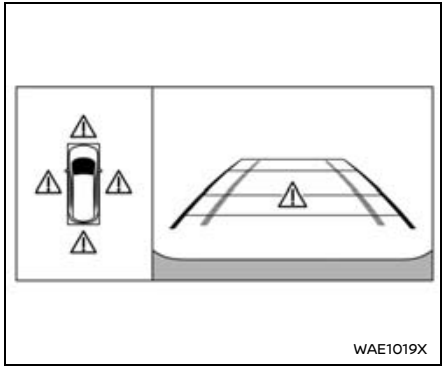

System temporarily unavailable

When the "⚠" icon is displayed on the screen, there will be abnormal conditions in the Intelligent Around View® Monitor. This will not hinder normal driving operation but the system should be inspected. It is recommended you visit a NISSAN dealer.

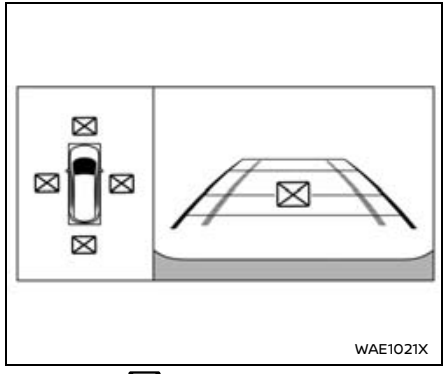

When the "⊠" icon is displayed on the screen, the camera image may be receiving temporary electronic disturbances from surrounding devices. This will not hinder normal driving operation but the system should be inspected. It is recommended you visit a NISSAN dealer.

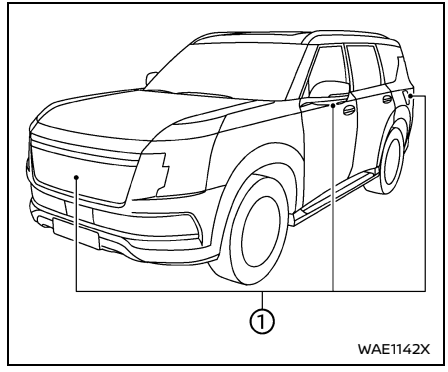

SYSTEM MAINTENANCE

⚠ CAUTION

- **Do not use alcohol, benzine or thinner to clean the camera. This will cause discoloration.**
- **Do not damage the camera as the monitor screen may be adversely affected.**

If dirt, rain or snow accumulates on any of the cameras ①, the Intelligent Around View® Monitor may not display objects clearly. Clean the camera by wiping with a cloth dampened with a diluted mild cleaning agent and then wiping with a dry cloth.

MOVING OBJECT DETECTION (MOD) (if so equipped)

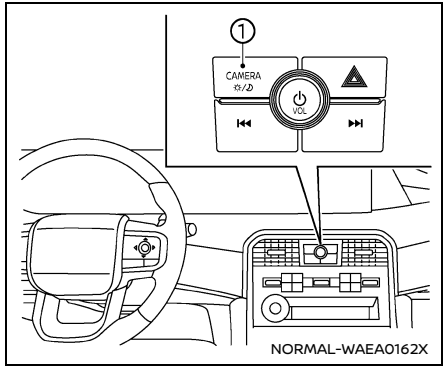

① CAMERA/☀/☽ button

BASIC INFORMATION

⚠ WARNING

- **Failure to follow the warnings and instructions for proper use of the Moving Object Detection system could result in serious injury or death.**
- **The MOD system is not a substitute for proper vehicle operation and is not designed to prevent contact with objects surrounding the vehicle. When maneuvering, always use the outside mirror and rearview mirror and turn and check the surroundings to ensure it is safe to maneuver.**
- **The system is deactivated at speeds above 5 MPH (8 km/h). It is reactivated at lower speeds.**
- **The MOD system is not designed to detect the surrounding stationary objects.**

The MOD system can inform the driver of moving objects near the vehicle when driving out of garages, maneuvering in parking lots and in other such instances.

The MOD system detects moving objects by using image processing technology on the image shown in the display.

MOD SYSTEM OPERATION

The MOD system will turn on automatically under the following conditions:

- When the transmission is in the R (Reverse) position.
- When the CAMERA/☀/☽ button is pushed to activate the Intelligent Around View® Monitor system on the display.
- When vehicle speed decreases below approximately 5 MPH (8 km/h).

The MOD system operates in the following conditions when the camera view is displayed:

- When the transmission is in the P (Park) or N (Neutral) position and the vehicle is stopped, the MOD system detects the moving objects in the bird's-eye view. The MOD system will not operate if either door is opened. If outside mirrors are folded, MOD may not operate properly.
- When the transmission is in the D (Drive) position, and the vehicle speed is below approximately 5 MPH (8 km/h), the MOD system detects moving objects in the front view, front-wide view or Invisible Hood View.
- When the transmission is in the R (Reverse) position and the vehicle speed is below approximately 5 MPH (8 km/h), the MOD system detects moving objects in the rear view or rear-wide view. The MOD system will not operate if the liftgate is open.

The MOD system does not detect moving objects in the front-side view and the 3D view. The MOD icon is not displayed on the screen when in this view (depending on models).

When the MOD system detects a moving object near the vehicle, the orange frame will be displayed on the view where the object is detected and a chime will sound once. While the MOD system continues to detect moving objects, the orange frame continues to be displayed.

NOTE:
While the RCTA chime is beeping, the MOD system does not chime.

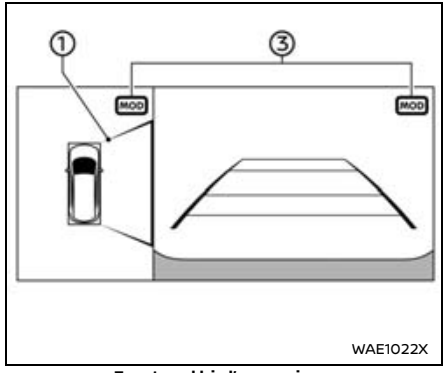

Front and bird's-eye views

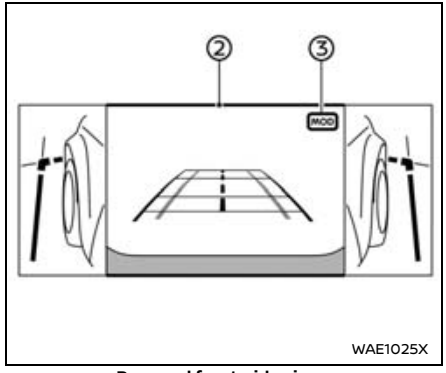

Rear and front-side views

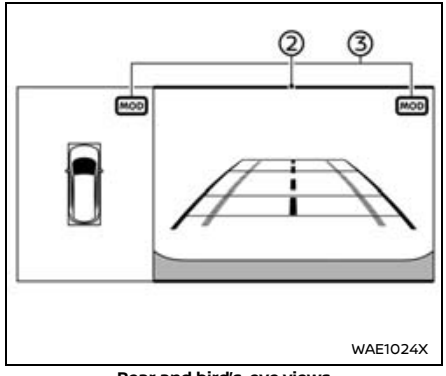

Rear and bird's-eye views

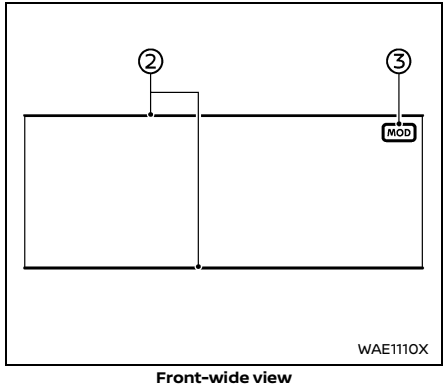

Front-wide view

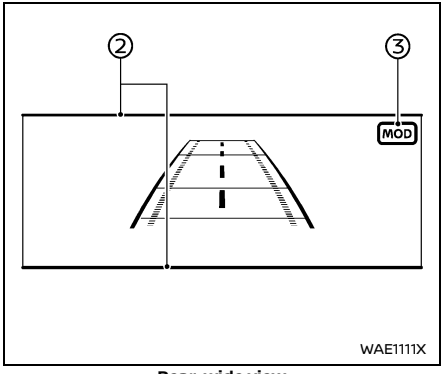

Rear-wide view

In the bird's-eye view, the orange frame ① is displayed on each camera image (front, rear, right, left) depending on where moving objects are detected.

The orange frame ② is displayed on the front view, rear view, front-wide view, Invisible Hood View and rear-wide view.

A green MOD icon ③ is displayed in the view where the MOD system is operative. A gray MOD icon ③ is displayed in the view where the MOD system is not operative.

If the MOD system is turned off, the MOD icon ③ is not displayed.

TURNING MOD ON AND OFF

The MOD system can be turned on and off using the vehicle information display. (See "Driver Assistance" (P.113).)

MOD SYSTEM LIMITATIONS

⚠ WARNING

Listed below are the system limitations for MOD. Failure to operate the vehicle in accordance with these system limitations could result in serious injury or death.

- **Do not use the MOD system when towing a trailer. The system may not function properly.**
- **Excessive noise (for example, audio system volume or open vehicle window) will interfere with the chime sound, and it may not be heard.**
- **The MOD system performance will be limited according to environmental conditions and surrounding objects such as:**
  - **When there is low contrast between background and the moving objects.**
  - **When there is blinking source of light.**
  - **When strong light such as another vehicle's headlight or sunlight is present.**
  - **When camera orientation is not in its usual position, such as when the outside mirror is folded.**
  - **When there is dirt, water drops or snow on the camera lens.**
  - **When the position of the moving objects in the display is not changed.**
- **The MOD system might detect flowing water droplets on the camera lens, white smoke from the muffler, moving shadows, etc.**
- **The MOD system may not function properly depending on the speed, direction, distance or shape of the moving objects.**
- **If your vehicle sustains damage to the parts where the camera is installed, leaving it misaligned or bent, the sensing zone may be altered and the MOD system may not detect objects properly.**
- **When the temperature is extremely high or low, the screen may not display objects clearly. This is not a malfunction.**

NOTE:

The green MOD icon will change to orange if one of the following has occurred.

- **When the system is malfunctioning.**
- **When the component temperature reaches a high level.**
- **When the rear view camera has detected a blockage.**

If the icon light continues to illuminate in orange, have the MOD system checked. It

is recommended that you visit a NISSAN dealer for this service.

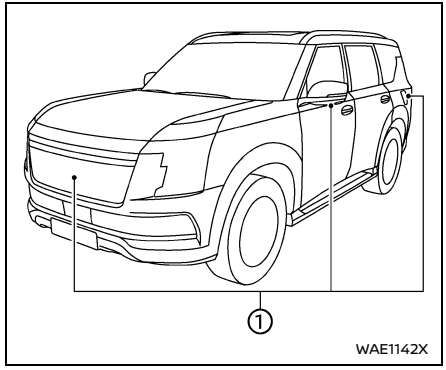

SYSTEM MAINTENANCE

⚠ CAUTION

- **Do not use alcohol, benzine or thinner to clean the camera. This will cause discoloration.**
- **Do not damage the camera as the monitor screen may be adversely affected.**

If dirt, rain or snow accumulates on any of the cameras ①, the MOD system may not operate properly. Clean the camera by wiping with a cloth dampened with a diluted mild cleaning agent and then wiping with a dry cloth.

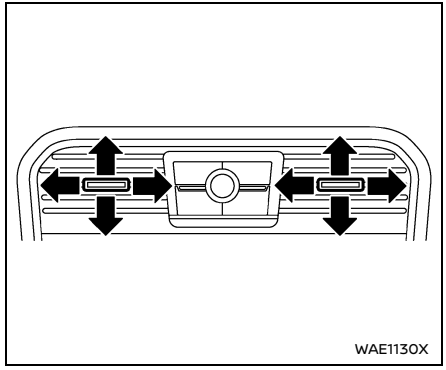

CENTER VENTILATORS

Open or close the vents, and adjust the air flow direction of the ventilators by moving the center knob as illustrated.

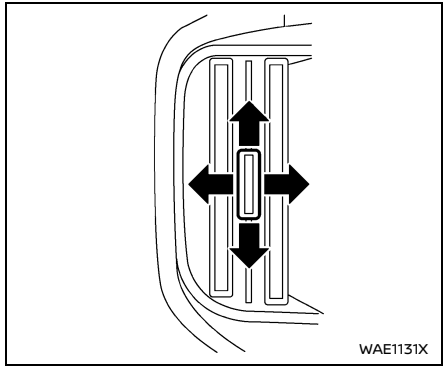

SIDE VENTILATORS

Open or close the vents, and adjust the air flow direction of the ventilators by moving the center knob as illustrated.

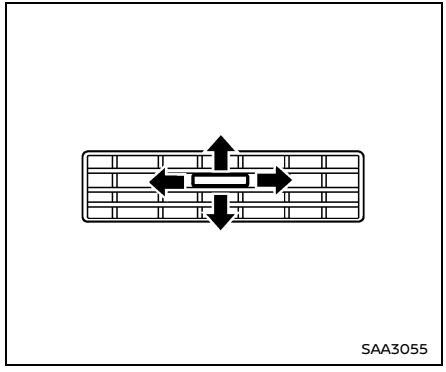

REAR VENTILATORS

Open or close the vents, and adjust the air flow direction of the ventilators by moving the center knob as illustrated.

BASIC INFORMATION

⚠ WARNING

- **The air conditioner cooling function operates only when the engine is running.**
- **Do not leave children or adults who would normally require the support of others alone in your vehicle. Pets should not be left alone either.**

  On hot, sunny days, temperatures in a closed vehicle could quickly become high enough to cause severe or possibly fatal injuries to people or animals.
- **Do not use the recirculation mode for long periods as it may cause the interior air to become stale and the windows to fog up.**
- **Do not adjust the heating and air conditioning controls while driving so that full attention may be given to vehicle operation.**

Start the engine and operate the climate control system.

NOTE:

- **Odors from inside and outside the vehicle can build up in the air conditioner unit. Odor can enter the passenger compartment through the ventilators.**

- **When parking, set the heater and air conditioner controls to turn off air recirculation to allow fresh air into the passenger compartment. This should help reduce odors inside the vehicle.**

While the engine is stopped by the Idling Stop System, activating the front defroster will cause the engine to automatically restart. While the engine is running, activating the front defroster will prevent the Idling Stop System from automatically stopping the engine.

When the engine is stopped by the Idling Stop System, heater and air conditioner performance may be reduced. To keep full heater and air conditioner performance, restart the engine by pushing the Idling Stop OFF switch. (See "Idling Stop System" (P.432).)

AUTOMATIC AIR CONDITIONER

Basic information

You can use either the front air conditioner control panel or keys on the climate control screen to control the automatic air conditioner.

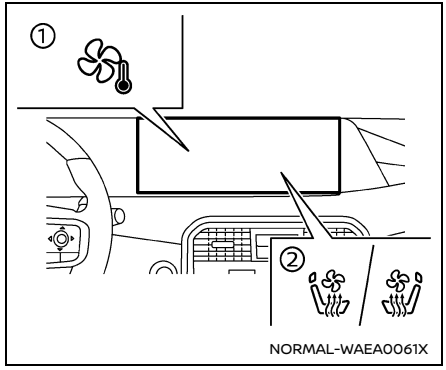

Example

To display the climate control screen, touch the " " key ① on the touch screen display. You can also control some air conditioner settings by touching " " or " " key ② (if so equipped) while displaying other than climate control screen.

When the air conditioner is on, the temperature is shown on the bottom of the screen. You can also operate the air conditioner by touching the temperature area.

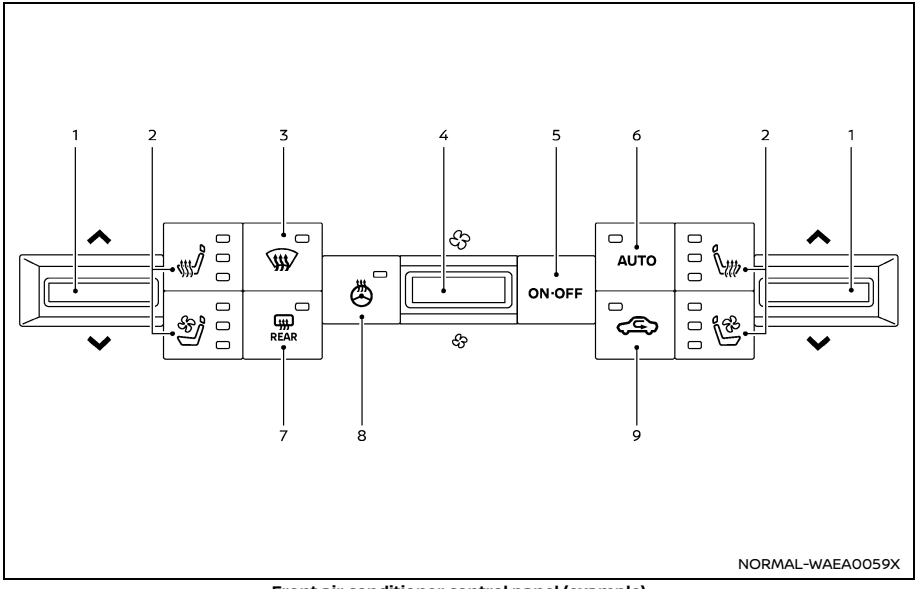

Front air conditioner control panel (example)

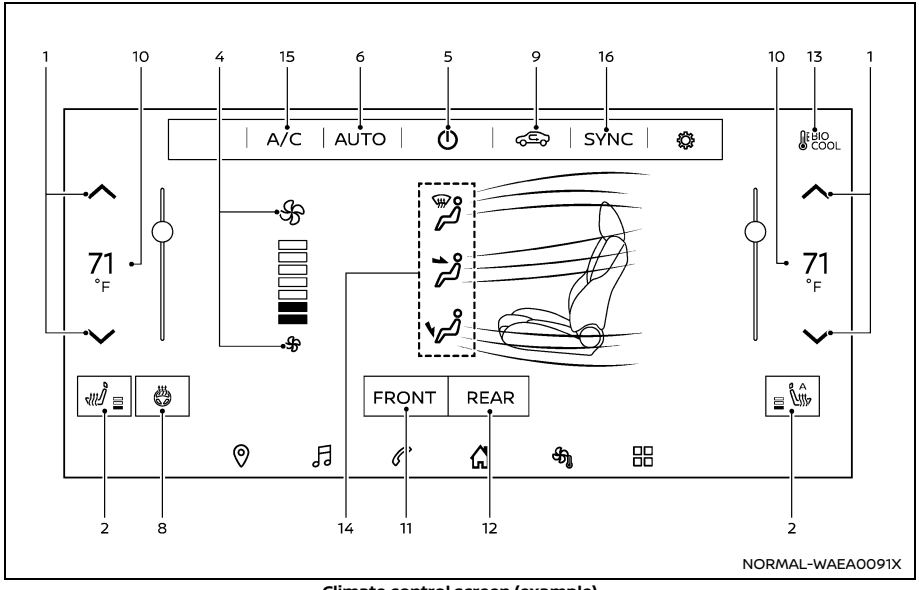

Climate control screen (example)

1. Temperature control switches/keys
2. Front ventilated/heated seats control buttons/keys (if so equipped)
   (See "Ventilated seats (if so equipped)" (P.163) or "Heated seats (if so equipped)" (P.162).)
3. (front defroster) button
4. Fan speed control switch/keys
5. ON·OFF button/key
6. AUTO (automatic) button/key
7. (rear window defroster) button
   (See "Rear window defroster and outside mirror defroster (if so equipped)" (P.154).)
8. Heated steering wheel switch/key (if so equipped)
   (See "Heated steering wheel (if so equipped)" (P.161))
9. Air intake control button/key
10. Temperature display
11. FRONT air conditioner key
12. REAR air conditioner key
13. BIO COOL (Biometric cooling) icon (if so equipped)
14. Air flow control key
15. A/C (air conditioner) key
16. SYNC (synchronize) key

Automatic operation

Cooling and/or dehumidified heating (AUTO):

This mode may be used all year round as the system automatically works to keep a constant temperature. Air flow distribution and fan speed are also controlled automatically.

1. Use the AUTO button or key. (The indicator light on the button will illuminate and the color of the key will turn orange.)
2. Use the temperature control switches or keys on the corresponding side to set the desired temperature.
   - You can individually set temperatures for the driver's side and front passenger's side when the color of the SYNC key is white.

A visible mist may be seen coming from the ventilators in hot, humid conditions as the

air is cooled rapidly. This does not indicate a malfunction.

Heating (A/C OFF):

The air conditioner does not activate in this mode. Use this mode when you only need to heat.

1. Use the AUTO button or key. (The indicator light on the button will illuminate and the color of the key will turn orange.)
2. Touch the "A/C" key to change the color of the key to white.
3. Use the temperature control switches or keys on the corresponding side to set the desired temperature.
   - You can individually set temperatures for the driver's side and front passenger's side when the color of the "SYNC" key is white.
   - The temperature of the passenger compartment will be maintained automatically. Air flow distribution and fan speed are also controlled automatically.

NOTE:

- **Do not set the temperature lower than the outside air temperature or the system may not work properly.**
- **Not recommended if windows fog up.**

Dehumidified defrosting or defogging:

1. Push the button. (The indicator light on the button will illuminate.)
2. Use the temperature control switches or keys on the corresponding side to set the desired temperature.
   - To quickly remove ice from the outside of the windows, use the fan speed control switch or keys to set the fan speed to maximum.
   - As soon as possible after the windshield is cleared, use the AUTO button or key to turn to the automatic mode.

Manual operation

Fan speed control:

Use the fan speed control switch or keys to manually control the fan speed.

Air intake control:

The air intake control mode will change each time the air intake control button or key is pushed or touched.

- When the air recirculates inside the vehicle, the indicator light on the air intake control button will illuminate and the color of the air intake control key is orange.
- When the air flow is drawn from outside the vehicle, the indicator light on the air intake control button will turn off and the color of the air intake control key is white.
- When the " AUTO " icon (if so equipped) is displayed in the climate control screen, the air intake will be controlled automatically.

Air flow control:

Touching the air flow control key manually controls air flow and selects the air outlet:

- — Air flows mainly from center and side ventilators.
- — Air flows mainly from the foot outlet and partly from the defroster.
- — Air flows mainly from the defroster.

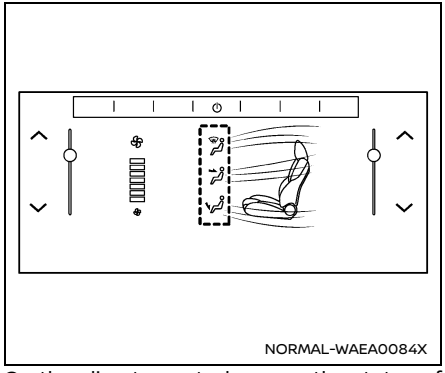
NORMAL-WAEA0084X

On the climate control screen, the status of air flow for each position can be checked.

You can turn on and off air flow individually by touching the desired position.

The amount of wind can change by swiping the display.

When adjusting the temperature, the color of display showing the temperature of wind will change. These colors do not indicate the temperature of wind but the set temperature.

Synchronize temperature settings:

Touch the "SYNC" key. When the color of the "SYNC" key has turned to orange, the SYNC mode has been activated.

When the SYNC mode is active, the driver's side temperature control switch/key will control the driver's side, front passenger's side and rear temperatures.

When the front passenger's side or rear temperature setting is changed, it will cancel the SYNC mode of the operated individual zone.

Changing both the front passenger's side temperature setting and the rear temperature setting will completely turn off the SYNC mode.

Turning the system on/off

Push or touch the ON·OFF button/key.

Remote engine start logic

When the remote engine start function is activated, the automatic air conditioner and heater may go into automatic heating or cooling mode depending on the outside and cabin temperatures. During this period, the display and the buttons will be inoperable until the ignition switch is placed in the ON position. When the temperature is low, the rear defroster may also be activated automatically with the activation of the remote engine start function. (See "Remote engine start" (P.209).)

REAR AUTOMATIC AIR CONDITIONING SYSTEM

Basic information

When the front air conditioning system is on, the rear air conditioning system can be operated with the buttons on the front air conditioner control panel (if so equipped), the touch panel screen (if so equipped) and the rear air conditioner control panel at the rear of the center console.

Operation on the front air conditioner controls

To control the rear automatic air conditioning system with the front air conditioner controls (the touch panel screen and the front air conditioner control panel), touch the "REAR" key on the climate control screen to display the rear climate screen.

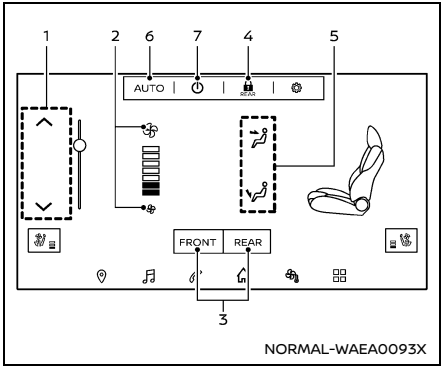

Example

Available items:

1. Temperature control keys
   Touch to decrease or increase the temperature setting.
2. Fan speed control keys
   The fan speed of the air from the ventilators can be adjusted.
3. FRONT/REAR air conditioner keys
   Touch to switch the screen between climate control screen and rear climate screen.
4. Rear air conditioner lock key
   Touch to turn the rear air conditioner control lock on/off.
5. Air flow control keys
   Touch to turn on the air flow from each position.
6. AUTO (automatic) key
   Touch to turn the auto mode on/off.
7. ON/OFF key
   Touch to turn the rear air conditioner on/off.

You can also control the rear air conditioner with the buttons on the front air conditioner control panel while the rear climate screen is displayed.

Rear air conditioner control lock:

Touch the rear air conditioner lock key to lock the rear air conditioner control by the rear air conditioner control switches. (The color of the rear air conditioner lock key will be orange.)
To unlock it, touch the key again.

Rear air conditioner control switches operation

When the rear air conditioner control lock (if so equipped) is off (the color of the rear air conditioner lock key is white), the rear automatic air conditioning system can also be adjusted by using the rear air conditioner control switches located on the rear of the center console.

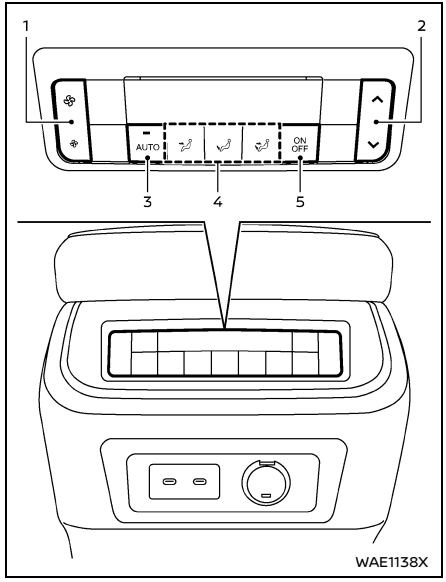

Example

1. Fan speed control switches
   Rear fan speed control up/down
2. Temperature control switches
   Rear temperature control up/down
3. AUTO (automatic) switch
   Rear automatic air conditioning system on, AUTO mode on

4. Air flow control switches
   Rear air flow mode change
5. ON/OFF switch
   Rear automatic air conditioning system on/off

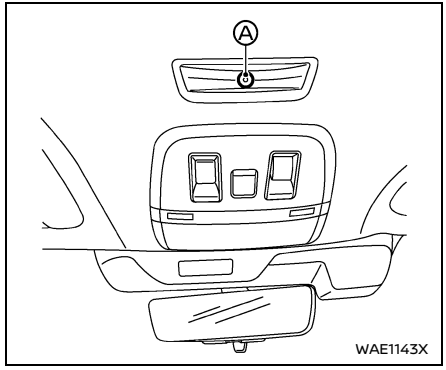

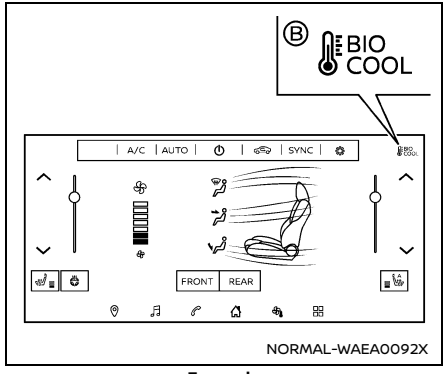

Example

BIOMETRIC COOLING (if so equipped)

Using the infrared (IR) sensor Ⓐ, the biometric cooling controls air flow volume in accordance with the passenger's temperature of their faces depending on the conditions.

- When the front passenger's seat is occupied (the seat belt buckle has latched) and the system detects that the front passenger's surface temperature is high, the air flow volume to the front seat will be increased.
- When a second row seat is occupied (the seatbelt buckle has latched), the rear air conditioning system will start operation automatically (if the front air conditioner is in operation).
- When a second row seat is occupied (the seat belt buckle has latched) and the system detects that the second row seat passenger's surface temperature is high, the air flow volume to the second and third row seat passengers will be increased.

Turning the biometric cooling on/off:

To activate/deactivate the biometric cooling function, perform the following steps.

1. Touch " " key on the touch screen display.
2. Touch " " key.
3. Touch "Biometric Cooling (BIO COOL)" key and select ON/OFF.

When this function is activated, the key Ⓑ appears in white.

NOTE:

- **Wearing sunglasses, having a beard, etc., may affect the ability of accurate measurement of facial body temperature and, as a result, the control expected by the passenger may not be possible.**
- **System does not have the capability to identify individual passengers. Also body temperature readings do not leave the vehicle.**

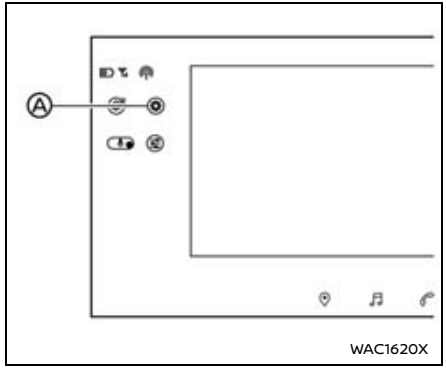

Example

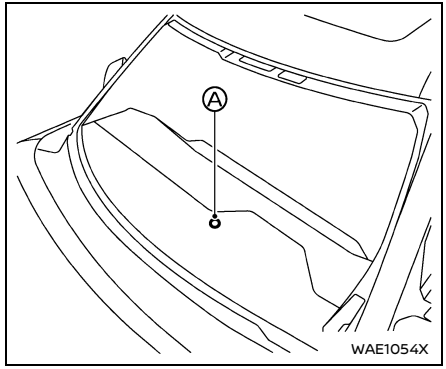

AIR CONDITIONER SETTINGS

Some of the air conditioning related items can be operated using the touch screen display. See the NissanConnect® Owner's Manual for basic usage of the Touch screen display.

1. Touch " ☼ " key Ⓐ on the touch screen display to display "All Settings" menu.
2. Touch "Vehicle" key.
3. Touch "Climate" key.

See "Climate" (P.144) for more details.

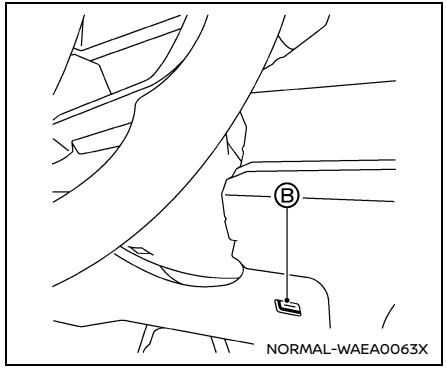

OPERATING TIPS

When the engine coolant temperature and outside air temperature are low, the air flow from the foot outlets may not operate. However, this is not a malfunction. After the coolant temperature warms up, the air flow from the foot outlets will operate normally.

The sensors Ⓐ and Ⓑ located on the instrument panel help maintain a constant temperature. Do not put anything on or around the sensors.

LINKING INTELLIGENT KEY

The air conditioner system settings can be memorized for each Intelligent Key. See "Setting memory function" (P.234).

IN-CABIN MICROFILTER

The climate control system is equipped with an In-cabin microfilter which collects dirt, dust, etc.

To make sure the air conditioner heats, defogs, and ventilates efficiently, replace the filter in accordance with the specified maintenance intervals listed in the "9. Maintenance and schedules" section. If replacement is required, it is recommended you visit a NISSAN dealer for this service.

The filter should be replaced if the air flow decreases significantly or if windows fog up easily when operating the heater or air conditioner.

SERVICING CLIMATE CONTROL

The climate control system in your vehicle is charged with a refrigerant designed with the environment in mind. **This refrigerant will not harm the earth's ozone layer.** However, special charging equipment and lubricant are required when servicing your air conditioner. Using improper refrigerants or lubricants will cause severe damage to your climate control system. (See "Capacities and recommended fluids/lubricants" (P.523) for climate control system refrigerant and lubricant recommendations.)

A NISSAN dealer will be able to service your environmentally friendly climate control system.

⚠ WARNING

The system contains refrigerant under high pressure. To avoid personal injury, any air conditioner service should be done only by an experienced technician with the proper equipment.

DRIVING RECORDER (if so equipped)

BASIC INFORMATION

The driving recorder saves footage of the front and rear of the vehicle as videos and photos, which can be viewed on the touch screen display or your smartphone.

The driving recorder is also capable of sound and video recording in the vehicle.

For the driving recorder setting, see "Touch screen display" (P.143).

- The recording function of the driving recorder includes general recording, which records continuously at fixed intervals, and Record Event, which starts recording by manual operation or an impact to the vehicle.
- If the general recording data exceeds the recording area of the microSD card, the oldest data will be automatically overwritten. NISSAN recommends that you back up the recording data regularly.
- Record Event and photo data will not be overwritten. If the recording area of the microSD card is exceeded, data cannot be saved and a message will be displayed on the driving recorder screen. NISSAN recommends that the unnecessary data should frequently be deleted .

All recording functions are turned off at the first start. NISSAN recommends turning them on in the touch screen display setting menu before you start driving.

PRECAUTIONS OF THE DRIVING RECORDER

- Immediately after turning on the ignition switch, the driving recorder is not activated and cannot start recording. Please wait until the driving recorder starts up.
- Immediately after inserting the microSD card, recording will not be possible as the microSD card will be read. Please wait until the loading of the microSD card has finished.
- If the temperature inside of the vehicle is too hot or too cold, the recording function and Wi-Fi communication function may stop to protect equipment. Adjust the temperature inside the vehicle to an appropriate temperature using the air conditioner, etc.
- There may be differences in the time information of the recording files between the front camera, rear camera and inside camera.
- In the following cases, recording may start unexpectedly.
  - A strong impact is applied to the vehicle body
  - The door is opened or closed forcefully
- The Record Event function is designed to activate in the event of a collision. However, it may not start recording if the impact is minor.
- The recording may not be possible due to sounds inside the vehicle or surrounding noises.
- Depending on the surrounding brightness and distance to the object, the image may not be shown clearly.
- If an LED traffic light, etc., has been recorded, it may appear blinking or the color may not be discernible.
- Recorded footages are not guaranteed to be effective as evidence of traffic accidents, etc.
- The quality or recording of video/audio may not be guaranteed in every circumstance.

Data and Content Warning: Any data, recordings, or other content ("Content") captured by the driving recorder may contain inaccurate or incomplete information due to many factors, including but not limited to, the passage of time, changing environmental circumstances, technological corruption, or digital manipulation or extraction.

Content Warranty: Any Content captured by the driving recorder is provided to you "as is" and you agree to use it at your own risk. NISSAN (and its licensors and suppliers) make no guarantees, representations, or warranties of any kind, express or implied, arising by law or otherwise, including but not limited to, content, quality, accuracy, completeness, effectiveness, reliability, fitness for a particular purpose, usefulness, use or results to be obtained from this Content, or that the Content or any server that may be required to operate the driving recorder will be uninterrupted or error free.

Disclaimer of Warranty: THE DRIVING RECORDER AND CONTENT ARE PROVIDED ON AN "AS IS" AND "WITH ALL FAULTS" BASIS, AND NISSAN (AND ITS LICENSORS AND SUPPLIERS) EXPRESSLY DISCLAIM ALL OTHER WARRANTIES, EXPRESS OR IMPLIED, INCLUDING BUT NOT LIMITED TO, THE IMPLIED WARRANTIES OF NON-INFRINGEMENT, MERCHANTABILITY, SATISFACTORY QUALITY, ACCURACY, TITLE AND FITNESS FOR A PARTICULAR PURPOSE. NO ORAL OR WRITTEN ADVICE OR INFORMATION PROVIDED BY NISSAN (OR ANY OF ITS LICENSORS, AGENTS, EMPLOYEES, OR THIRD PARTY PROVIDERS) SHALL CREATE A WARRANTY, AND YOU ARE NOT ENTITLED TO RELY ON ANY SUCH ADVICE OR INFORMATION.

Disclaimer of Liability: NISSAN (AND ITS LICENSORS AND SUPPLIERS) SHALL NOT BE LIABLE TO YOU IN RESPECT OF ANY CLAIM, DEMAND OR ACTION, IRRESPECTIVE OF THE NATURE OF THE CAUSE OF THE CLAIM, DEMAND OR ACTION ALLEGING ANY LOSS, INJURY OR DAMAGES, DIRECT OR INDIRECT, WHICH MAY RESULT FROM THE USE OR POSSESSION OF THE CONTENT AND/OR USE OR POSSESSION OF THE DRIVING RECORDER; OR FOR ANY LOSS OF PROFIT, REVENUE, CONTRACTS OR SAVINGS, OR ANY OTHER DIRECT, INDIRECT, INCIDENTAL, SPECIAL OR CONSEQUENTIAL DAMAGES ARISING OUT OF YOUR USE OF OR INABILITY TO USE THE CONTENT AND/OR THE DRIVING RECORDER, ANY DEFECT IN THE CONTENT AND/OR DRIVING RECORDER, WHETHER IN AN ACTION IN CONTRACT OR TORT OR BASED ON A WARRANTY, EVEN IF NISSAN HAS BEEN ADVISED OF THE POSSIBILITY OF SUCH DAM-

AGES. YOU ASSUME ANY RISKS ASSOCIATED WITH YOUR USE OF THE CONTENT AND/OR DRIVING RECORDER. TO THE EXTENT NISSAN IS NOT PERMITTED UNDER APPLICABLE LAW TO EXCLUDE ITS LIABILITY PURSUANT TO THE ABOVE, NISSAN TOTAL AGGREGATE LIABILITY TO YOU SHALL BE LIMITED TO THE AMOUNT OF US $100.00. Some states, territories, and countries do not allow certain liability exclusions or damages limitations, so to that extent the above may not apply to you.

⚠ WARNING

Taking your eyes off the road for too long or too often while using any driving recorder functionalities or related features can cause a crash or other serious injuries. Do not give extended attention to the driving recorder while operating the vehicle. Focus your attention on operation of the vehicle. The driving recorder feature is provided for convenience only. The driver is responsible for driving with due care and attention at all times.

THE DRIVING RECORDER IS INTENDED TO BE USED FOR PROVIDING CERTAIN CONTENT RELATED TO YOUR VEHICLE AND IS NOT INTENDED TO BE USED AS A SAFETY RELATED TOOL AND CANNOT WARN YOU ABOUT ALL DANGERS AND HAZARDS WITH RESPECT TO YOUR DRIVE OR THE CURRENT ENVIRONMENT OF YOUR VEHICLE.

Applicable laws, regulations, and ordinances may prohibit or otherwise restrict certain actions or use of the driving recorder and/or Content in your jurisdiction. NISSAN is not responsible for your compliance with applicable laws, regulations, and ordinances. You are solely responsible for compliance with any applicable laws, regulations, or ordinances relating to use of the driving recorder in your vehicle. You are solely responsible for compliance with any applicable laws, regulations, or ordinances relating to use, retention, or dissemination of any Content captured by the driving recorder.

NOTE:
- **While driving, the camera screen, saved videos or still images cannot be displayed.**
- **When transferring or disposing of the device with a microSD card inserted, delete all saved recorded data to protect your privacy.**
- **This product includes the following software:**
  1) **Software developed by or for Panasonic Automotive Systems Co., Ltd. (Panasonic)**
  2) **Third Party Owned Software Licensed to Panasonic**
  3) **Open source software (OSS)**
- **Software classified as (3) above includes open source software (OSS), including various software to which the license information listed on the website below applies.**
  http://car.panasonic.jp/oss/l01yvn7c

ABOUT MICROSD CARD

⚠ WARNING

Never allow children to contact the microSD card. If it is accidentally swallowed, it may become stuck in the throat and cause serious injury or death in the worst case.

NOTE:
If the microSD card is ejected during recording or playback, data may be damaged.

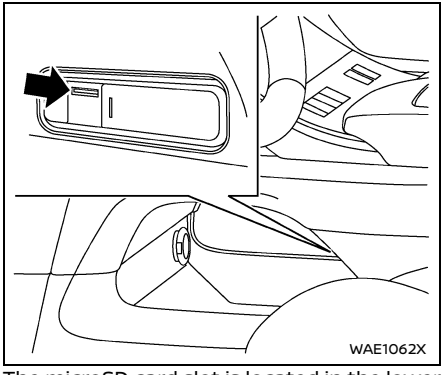

The microSD card slot is located in the lower console tray, under the center console.

- Videos and still images saved with the driving recorder are stored on the microSD card inserted into the card slot located on inside of the lower console tray.
- In the following cases, data may not be saved correctly.
  - If initialization is performed on a device other than this unit
  - If files created with a device other than this unit are mixed
  - When changing the file name recorded on the microSD card
  - If you use a microSD card other than the one included with this device
  - If the microSD card is not inserted correctly

ABOUT COPYRIGHT

- Unauthorized copying, broadcasting, public performance, and rental of copyrighted materials is prohibited by law.
- Except for personal use, videos and images taken may not be used without the permission of the rights holder. Photo shooting may be restricted even for personal use.
- Please refrain from using this device to take portraits of others without their consent, or to display them to an unspecified number of people, as this may infringe on portrait rights.
- If you use this device to engage in malicious behavior that causes a significant nuisance to the public, you may be subject to punishment according to laws and ordinances (nuisance prevention ordinances, etc.)

DRIVING RECORDER SYSTEM INTERFACE

Touch " ⊞ " on the Launch Bar to display the apps menu.

Touch "Dash Cam" key to display the driving recorder screen.

The "Dash Cam" menu can also be set in the home menu of the touch screen display. See "Touch screen display" (P.143) for more details.

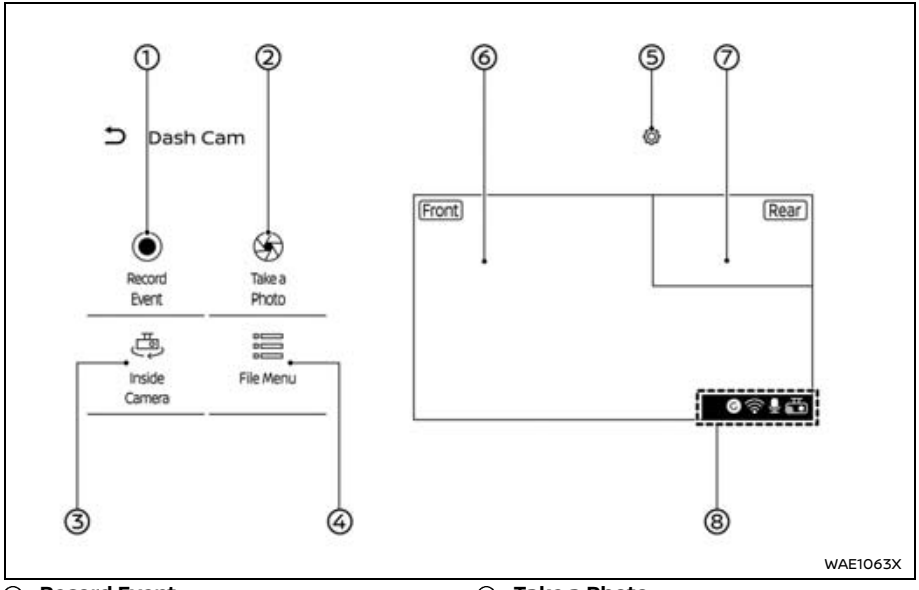

① **Record Event**
Touch to start recording manually in case of an emergency, etc.
The recording time starts 10 seconds before you start recording, and continues until 25 seconds after you start recording.

② **Take a Photo**
Touch to save the image shown on the camera screen (main) as a still image.

③ **Inside Camera/Outside Camera**
Touch to switch the inside/outside camera.

④ **File Menu**
Photos and recorded files can be viewed or deleted.

⑤ ☼
Touch to display the driving recorder settings menu.

⑥ **Camera screen (main)**
The image from the front camera is displayed.

⑦ **Camera screen (secondary)**
The image from the rear camera will be displayed. Touch to swap the display with the camera screen (main).

⑧ **Informational icons**
Icons indicating the operating status of the driving recorder will be displayed.

NOTE:

- **The images on the camera screen (main)/(secondary) may be displayed later than they actually are.**
- **The camera screen cannot be displayed while driving, however, "Record Event" and "Take a Photo" can be used while driving.**

Record Event has two measures.

1. Manual activation
   Recording starts by touching "Record Event" key on the screen.
2. Automatic activation
   Recording starts by unexpected accident (collision, burglar, etc.).

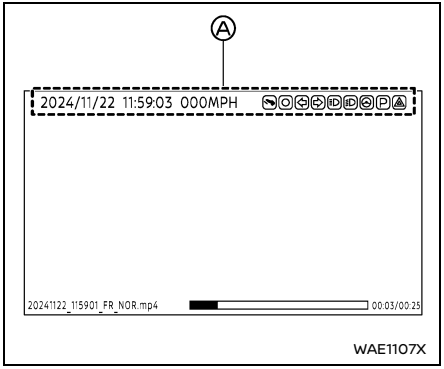

Recording playback screen (example)

Ⓐ: Overlay information

The overlay information has the following information

- Date and time information
- Vehicle speed information
- Function icons

The overlay information is not displayed on the inside camera video.

NOTE:

- **Vehicle speed information may lag behind the video.**
- **There is no guarantee that the speed information will always be used as evidence.**

INFORMATIONAL ICONS

Icons indicating the operating status of the driving recorder are displayed on the driving recorder screen.

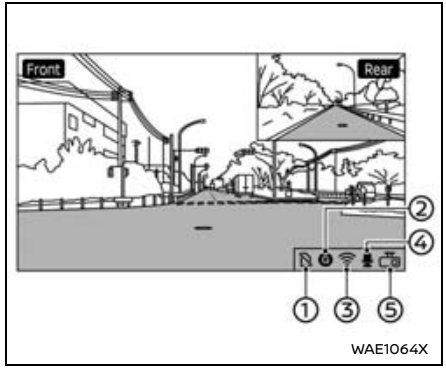

Example

- Position ①:
  No icon: microSD card detected
  : microSD card not detected
- Position ②:
  (Red): Collision recording function ON
  : Collision recording function OFF
- Position ③:
  (White): Wi-Fi File Transfer ON
  No icon: Wi-Fi File Transfer OFF
- Position ④:
  : Audio recording ON
  : Audio recording OFF

- Position ⑤:

  : Emergency/manual/general recording in progress

  : Recording stopped

NOTE:

- **If the icon is not displayed in the location ① and the shot or recorded data is not saved, there may be insufficient free data space on the microSD card. If it occurs, delete sufficient amount of data.**
- **If is displayed, the microSD card may be malfunctioning. If the error does not resolve after formatting the microSD card, replace it with a new microSD card.**
- **If , (gray), or (gray) is displayed, the vehicle or the driving recorder may be malfunctioning. Have the system checked. It is recommended that you visit a NISSAN dealer for this service.**

FILE MENU

Photos and recorded files can be viewed or deleted in the file menu screen.

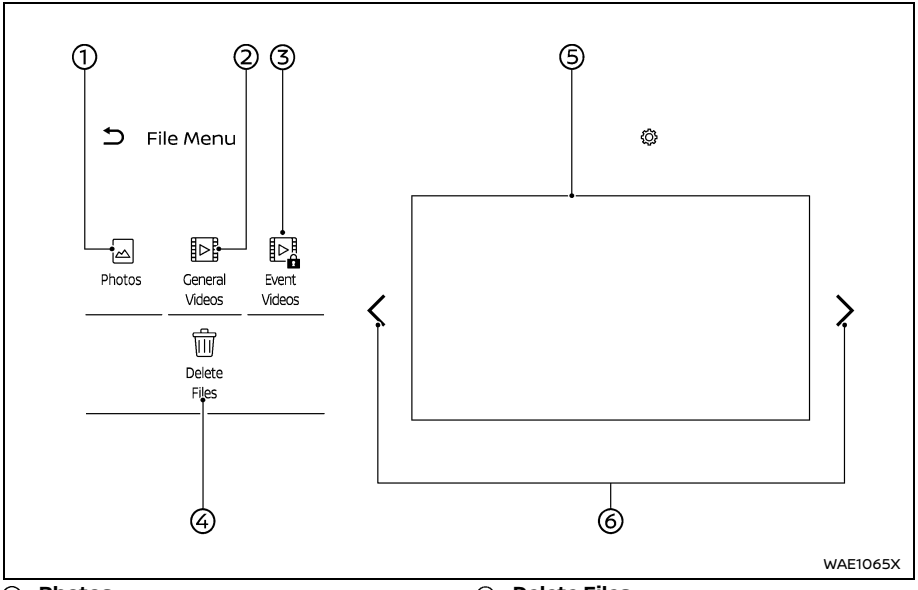

① **Photos**
Touch to select and display the saved photos in the file list.

② **General Videos**
Touch to select and play general recording videos in the file list.

③ **Event Videos**
Touch to select and play the Record Event videos in the file list.

④ **Delete Files**
Touch to select and delete files.

⑤ **File list**
A list of saved files will be displayed. Select a file from the list to play videos or view photos.
You can also delete videos and photos.

⑥ **< >**
Touch to switch the pages.

NOTE:
- **The file list or view files cannot be displayed while driving.**
- **The recording function cannot be used while a file list is displayed or a video is being played.**

IN CAR CAMERA MENU

You can record or take photos of the vehicle's cabin for making a record of your family trip, etc.
Photos and recorded files can be viewed or deleted in the "File Menu".

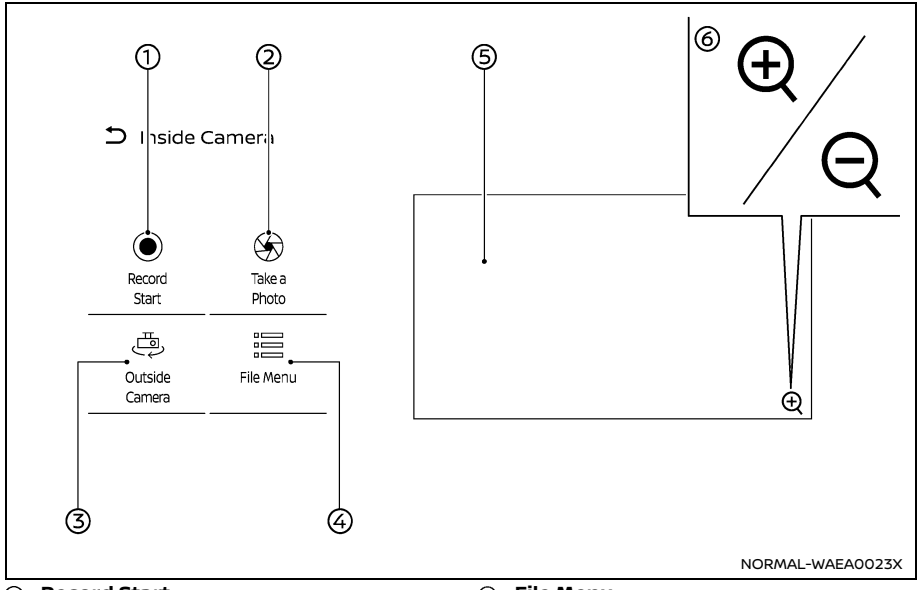

① **Record Start**
Touch to start/stop recording manually.

② **Take a Photo**
Touch to save the image shown on the camera screen ⑤ as a still image.

③ **Outside Camera/Inside Camera**
Touch to switch the inside/outside camera.

④ **File Menu**
See "File menu" (P.280).

⑤ **In Car Camera screen**
Driver can check the status of the 2nd row seat on the touch screen display.

⑥ **Zoom icon**
Touch the icon to select zoom (to the rear seat passengers) or not.

NOTE:
The camera screen cannot be displayed while driving, however, "Record Start" and "Take a Photo" can be used while driving.

DRIVING RECORDER SETTINGS

Touch ⚙ to display the driving recorder settings menu.

See "Touch screen display" (P.143) for the details of the driving recorder settings items.

A smartphone can be connected to the driving recorder via Wi-Fi using a dedicated smartphone app. Files stored on the driving recorder can be checked and downloaded using the smartphone.

The dedicated app can be downloaded by Google Play (for Android) or App Store (iOS).

Google/Android/Google Play

Google, Android, Google Play, and other marks are trademarks of Google LLC.

App Store

Apple and the Apple logo are trademarks of Apple Inc., registered in the U.S. and other countries. App Store is a service mark of Apple Inc.



App download

- App name: NISSAN Intelligent Dash Cam
- Default Wi-Fi name: dvr_ssid
- Default Wi-Fi password: dvr_pass

If you have forgotten your password, you can initialize the driving recorder by selecting "System" key and then "Reset All Dash Cam Settings to Default" key.

NOTE:

- **If the recording setting is set to OFF when using the driving recorder for the first time, initialize the driving recorder.**
- **Initializing the microSD card will erase all data included. It is recommended that a backup data should be kept in advance.**

FEATURES AVAILABLE IN MYNISSAN APP

Using MyNISSAN app, users can take pictures using the driving recorder cameras from a remote location.

Also, if your vehicle is hit by something/someone or the lock is broken, the driving recorder will detect such events and send a notification and pictures to your MyNISSAN app.

RADIO APPROVAL INFORMATION

This device complies with part 15 of the FCC Rules. Operation is subject to the following two conditions:

(1) This device may not cause harmful interference, and (2) this device must accept any interference received, including interference that may cause undesired operation.

This transmitter must not be co-located or operated in conjunction with any other antenna or transmitter.

This equipment complies with FCC radiation exposure limits set forth for an uncontrolled environment and meets the FCC radio frequency (RF) Exposure Guidelines.

This equipment should be installed and operated keeping the radiator at least 20 cm or more away from person's body.

FCC CAUTION

Changes or modifications not expressly approved by the party responsible for compliance could void the user's authority to operate the equipment.

NOTE:
This device contains licence-exempt transmitter(s)/receiver(s) that comply with Innovation, Science and Economic Development Canada's licence-exempt RSS(s). Operation is subject to the following two conditions:
1. This device may not cause interference.
2. This device must accept any interference, including interference that may cause undesired operation of the device.
L'émetteur/récepteur exempt de licence contenu dans le présent appareil est conforme aux CNR d'Innovation, Sciences et Développement économique Canada applicables aux appareils radio exempts de licence. L'exploitation est autorisée aux deux conditions suivantes:
1. L'appareil ne doit pas produire de brouillage;
2. L'appareil doit accepter tout brouillage radioélectrique subi, même si le brouillage est susceptible d'en compromettre le fonctionnement.
This equipment complies with ISED radiation exposure limits set forth for an uncontrolled environment and meets RSS-102 of the ISED radio frequency (RF) Exposure rules.
This equipment should be installed and operated keeping the radiator at least 20 cm or more away from person's body.
Cet équipement est conforme aux limites d'exposition aux rayonnements énoncées pour un environnement non contrôlé et respecte les règles d'exposition aux fréquences radioélectriques (RF) CNR-102 de l'ISDE.
Cet équipement doit être installé et utilisé en gardant une distance de 20 cm ou plus entre le radiateur et le corps humain.

WINDOW ANTENNA

The antenna pattern is printed inside the 3rd row seat window.

⚠ CAUTION

- **Do not place metalized film near the 3rd row seat window or attach any metal parts to it. This may cause poor reception or noise.**
- **When cleaning the inside of the 3rd row seat window, be careful not to scratch or damage the 3rd row seat window antenna. Lightly wipe along the antenna with a dampened soft cloth.**
- **Do not damage the antenna pattern with luggage.**

SATELLITE RADIO ANTENNA

The antenna is located on the rear part of the vehicle roof. (See "Exterior rear" (P.6).)

⚠ CAUTION

- **A build up of ice on the antenna can affect radio performance. Remove the ice to restore radio reception.**
- **When removing snow from the roof, do not apply strong force to the antenna. That may cause broken antenna and roof panel dent.**

- **When using a high pressure car wash, keep the high pressure nozzle away from the antenna. The seal may be deformed or damaged.**
- **The radio performance may be affected if cargo carried on the roof blocks the radio signal. If possible, do not put cargo near the antenna.**

GLOBAL NAVIGATION SATELLITE SYSTEM (GNSS) ANTENNA (for ProPILOT Assist 2.1) (if so equipped)

Two antennas are located on the rear part of the vehicle roof. (See "Exterior rear" (P.6).)

CAUTION

- **A build up of ice on the antenna can affect GNSS performance. Remove the ice to restore GNSS reception.**
- **When removing snow from the roof, do not apply strong force to the antenna. That may cause broken antenna and roof panel dent.**
- **When using a high pressure car wash, keep the high pressure nozzle away from the antenna.**

  The seal may be deformed or damaged.
- **The GNSS performance may be affected if cargo carried on the roof blocks the GNSS signal. If possible, do not put cargo near the antenna.**

CAR PHONE OR CB RADIO

When installing a car phone or a CB radio in your vehicle, be sure to observe the following cautions, otherwise the new equipment may adversely affect the electronic control modules and electronic control system harness.

WARNING

- **A cellular phone should not be used for any purpose while driving so full attention may be given to vehicle operation. Some jurisdictions prohibit the use of cellular phones while driving.**
- **If you must make a call while your vehicle is in motion, the hands-free cellular phone operational mode (if so equipped) is highly recommended. Exercise extreme caution at all times so full attention may be given to vehicle operation.**
- **If a conversation in a moving vehicle requires you to take notes, pull off the road to a safe location and stop your vehicle before doing so.**

CAUTION

- **Keep the antenna as far away as possible from the electronic control modules.**
- **Keep the antenna wire more than 8 in (20 cm) away from the electronic control system harness. Do not route the antenna wire next to any harness.**
- **Adjust the antenna standing-wave ratio as recommended by the manufacturer.**
- **Connect the ground wire from the CB radio chassis to the body.**
- **For details, it is recommended you visit a NISSAN dealer.**

5 Starting and driving

Precautions when starting and driving 289
- Basic information 289
- Exhaust gas (carbon monoxide) 289
- Three-way catalyst 289
- Turbocharger system 290
- Tire Pressure Monitoring System (TPMS) 290
- Avoiding collision and rollover 293
- On-pavement and off-road driving precautions 293
- Off-road recovery 294
- Rapid air pressure loss 294
- About lowering of the vehicle body (if so equipped) 295
- Drinking alcohol/drugs and driving 295
- For NISMO models 295
- Driving safety precautions 295

Push-button ignition switch 297
- Basic information 297
- Operating range for engine start function 297
- Push-button ignition switch operation 298
- Push-button ignition switch positions 298
- Emergency engine shut off 298
- Automatic engine shut-off 299
- Intelligent Key battery discharge 299

Before starting the engine 300

Starting the engine 300
- Basic information 300
- Remote engine start 301

Driving the vehicle 301
- Engine protection mode 301
- Automatic Transmission (AT) 302

Parking brake 307
- Basic information 307
- Automatic operation 307
- Manual operation 308

Automatic brake hold 309
- Basic information 309
- How to activate/deactivate the automatic brake hold function 310
- How to use the automatic brake hold function 311

Drive Mode Selector (if so equipped) 312
- Basic information 312
- STANDARD mode 313
- ECO mode 313
- SPORT mode 314
- TOW mode 314
- SNOW mode 314
- SAND mode (if so equipped) 315
- ROCK mode (if so equipped) 315

MUD/RUT mode (if so equipped) ... 316
Traffic Sign Recognition (TSR) ... 316
Basic information ... 316
System operation ... 317
How to enable/disable the TSR system ... 318
System temporarily unavailable ... 319
System malfunction ... 319
System maintenance ... 319
Lane Departure Warning (LDW)/Intelligent Lane Intervention (I-LI) ... 319
Basic information ... 319
LDW system operation ... 320
How to enable/disable the LDW system ... 321
I-LI system operation ... 321
How to enable/disable the I-LI system ... 321
LDW/I-LI system limitations ... 322
System temporarily unavailable ... 323
System malfunction ... 324
System maintenance ... 324
Blind Spot Warning (BSW) ... 325
Basic information ... 325
BSW system operation ... 326
How to enable/disable the BSW system ... 327
BSW system limitations ... 327
BSW driving situations ... 328
Trailer BSW function operation ... 330
System temporarily unavailable ... 331
System malfunction ... 331
System maintenance ... 332
Intelligent Blind Spot Intervention (I-BSI) ... 333
Basic information ... 333
I-BSI system operation ... 334
How to enable/disable the I-BSI system ... 335
I-BSI system limitations ... 335
I-BSI driving situations ... 337
System temporarily unavailable ... 341
System malfunction ... 341
System maintenance ... 341
Rear Cross Traffic Alert (RCTA) ... 343
Basic information ... 343
RCTA system operation ... 343
How to enable/disable the RCTA system ... 344
RCTA system limitations ... 345
System temporarily unavailable ... 347
System malfunction ... 347
System maintenance ... 347
ProPILOT Assist Systems ... 349
Overview ... 349
ProPILOT Assist Systems Overview ... 351
ProPILOT Assist mode indicators ... 352
ProPILOT Assist displays and indicators ... 360
Intelligent Cruise Control (ICC) ... 362
Conventional (fixed speed) cruise control ... 366
Speed Limit Assist (a feature of ProPILOT Assist 2.1) ... 368
Speed Adjust by Route (a feature of ProPILOT Assist 2.1) ... 369
Steering Assist ... 370

Hands On Detection 372
Steering Assist with HD map data (a feature of ProPILOT Assist 2.1) 373
Driver Monitor (ProPILOT Assist 2.1) 375
Attention to the road (ProPILOT Assist 2.1) 376
Lane Change Assist (ProPILOT Assist 2.1) 376
Passing Assist (ProPILOT Assist 2.1) 378
License information (ProPILOT Assist 2.1) 380
Automatic Emergency Braking (AEB) with Pedestrian Detection system 381
Basic information 381
AEB with Pedestrian Detection system operation 382
Turning the AEB with Pedestrian Detection system ON/OFF 384
AEB with Pedestrian Detection system limitations 384
System temporarily unavailable 389
System malfunction 390
System maintenance 391
Intelligent Forward Collision Warning (I-FCW) 392
Basic information 392
I-FCW system operation 393
Turning the I-FCW system ON/OFF 394
I-FCW system limitations 395
System temporarily unavailable 396
System malfunction 396
System maintenance 397
Intelligent Driver Alertness (I-DA) 398
Basic information 398
I-DA system operation 399
How to enable/disable the I-DA system 399
I-DA system limitations 400
System malfunction 400
Rear Automatic Braking (RAB) 400
Basic information 400
RAB system operation 401
How to temporarily cancel the RAB system 402
RAB system limitations 402
System temporarily unavailable 404
System malfunction 404
System maintenance 405
Break-in schedule 405
Fuel Efficient Driving Tips 406
Increasing fuel economy 407
NISSAN All-Mode 4WD® (if so equipped) 407
Basic information 407
NISSAN All-Mode 4WD® system 408
4WD shift switch 410
4WD shift indicator 411
4WD warning message 411
4WD mode of Intelligent Around View® Monitor (if so equipped) 412
Rear differential lock system (if so equipped) 412
Air suspension system (if so equipped) 413
Basic information 413
Operation condition of the air suspension system 414

Switches ... 414
Vehicle height level ... 416
Modes and display indicators ... 416
Turning OFF the air suspension system ... 416
Air suspension system temporarily unavailable ... 416
Air suspension system malfunction ... 417
Parking/parking on hills ... 417
Electric power steering ... 418
Brake system ... 419
Braking precautions ... 419
Brake assist ... 420
Brake assist ... 420
Anti-lock Braking System (ABS) ... 420
Secondary Collision Mitigation Braking (SCMB) ... 421
Vehicle Dynamic Control (VDC) system ... 422
Basic information ... 422
How to turn off the VDC system ... 423
Brake Force Distribution ... 424
Chassis control ... 425
Basic information ... 425
Intelligent Trace Control ... 425
Hill Start Assist system ... 425
Hill descent control system (if so equipped) ... 426
Basic information ... 426
Hill descent control switch ... 427
Front and rear sonar system ... 427
Basic information ... 427
System operation ... 428
How to enable/disable the sonar system ... 429
Sonar system limitations ... 430
System temporarily unavailable ... 431
System maintenance ... 431
Idling Stop System ... 432
Basic information ... 432
Retrograde movement control function ... 434
Idling Stop System display ... 434
Idling Stop OFF switch ... 437
Cold weather driving ... 438
Freeing a frozen door lock ... 438
Anti-freeze ... 438
Battery ... 438
Draining of coolant water ... 438
Tire equipment ... 438
Special winter equipment ... 438
Driving on snow or ice ... 438
Engine block heater (if so equipped) ... 439
Active sound enhancement (if so equipped) ... 439

PRECAUTIONS WHEN STARTING AND DRIVING

BASIC INFORMATION

⚠ WARNING

- **Do not leave children or adults who would normally require the support of others alone in your vehicle. Pets should not be left alone either.**

  They could accidentally injure themselves or others through inadvertent operation of the vehicle. Also, on hot, sunny days, temperatures in a closed vehicle could quickly become high enough to cause severe or possibly fatal injuries to people or animals.
- **Properly secure all cargo to help prevent it from sliding or shifting. Do not place cargo higher than the seatbacks. In a sudden stop or collision, unsecured cargo could cause personal injury.**

EXHAUST GAS (carbon monoxide)

⚠ WARNING

- **Do not breathe exhaust gases; they contain colorless and odorless carbon monoxide. Carbon monoxide is dangerous. It can cause unconsciousness or death.**
- **If you suspect that exhaust fumes are entering the vehicle, drive with all windows fully open, and have the vehicle inspected immediately.**
- **Do not run the engine in closed spaces such as a garage.**
- **Do not park the vehicle with the engine running for any extended length of time.**
- **Keep the liftgate closed while driving, otherwise exhaust gases could be drawn into the passenger compartment. If you must drive with the liftgate open, follow these precautions:**
  1) **Open all the windows.**
  2) **Turn the air recirculation mode off and set the fan speed control to the highest level to circulate the air.**
- **If electrical wiring or other cable connections must pass to a trailer through the seal on the liftgate or the body, follow the manufacturer's recommendation to prevent carbon monoxide entry into the vehicle.**
- **The exhaust system and body should be inspected by a qualified mechanic whenever:**
  - **Your vehicle is raised for service.**
  - **You suspect that exhaust fumes are entering into the passenger compartment.**
  - **You notice a change in the sound of the exhaust system.**
  - **You have had an accident involving damage to the exhaust system, underbody, or rear of the vehicle.**

THREE-WAY CATALYST

The three-way catalyst is an emission control device installed in the exhaust system. Exhaust gases in the three-way catalyst are burned at high temperatures to help reduce pollutants.

⚠ WARNING

- **The exhaust gas and the exhaust system are very hot. Keep people, animals or flammable materials away from the exhaust system components.**
- **Do not stop or park the vehicle over flammable materials such as dry grass, waste paper or rags. They may ignite and cause a fire.**

⚠ CAUTION

- **Do not use leaded gasoline. Deposits from leaded gasoline seriously reduce the three-way catalyst's ability to help reduce exhaust pollutants.**

- **Keep your engine tuned up. Malfunctions in the ignition, fuel injection, or electrical systems can cause overrich fuel flow into the three-way catalyst, causing it to overheat. Do not keep driving if the engine misfires, or if noticeable loss of performance or other unusual operating conditions are detected. Have the vehicle inspected promptly. It is recommended you visit a NISSAN dealer for this service.**
- **Avoid driving with an extremely low fuel level. Running out of fuel could cause the engine to misfire, damaging the three-way catalyst.**
- **Do not race the engine while warming it up.**
- **Do not push or tow your vehicle to start the engine.**

TURBOCHARGER SYSTEM

The turbocharger system uses engine oil for lubrication and cooling of its rotating components. The turbocharger turbine turns at extremely high speeds and it can reach an extremely high temperature. It is essential to maintain a clean supply of oil flowing through the turbocharger system. A sudden interruption of oil supply may cause a malfunction in the turbocharger.

To ensure prolonged life and performance of the turbocharger, it is essential to comply with the following maintenance procedure.

⚠ CAUTION

- **Change your engine oil according to the recommended intervals shown in the "Maintenance and schedules" (P.503).**
- **Use only the recommended engine oil. (See "Capacities and recommended fluids/lubricants" (P.523).)**
- **If the engine has been operating at high rpm for an extended period of time, let it idle for a few minutes prior to turn off.**
- **Do not accelerate your engine to high rpm immediately after starting it.**

TIRE PRESSURE MONITORING SYSTEM (TPMS)

Basic information

Each tire, including the spare (if provided), should be checked monthly when cold and inflated to the inflation pressure recommended by the vehicle manufacturer on the vehicle placard or tire inflation pressure label. (If your vehicle has tires of a different size than the size indicated on the vehicle placard or tire inflation pressure label, you should determine the proper tire inflation pressure for those tires.)

As an added safety feature, your vehicle has been equipped with a tire pressure monitoring system (TPMS) that illuminates a low tire pressure telltale when one or more of your tires is significantly under-inflated. Accordingly, when the low tire pressure telltale illuminates, you should stop and check your tires as soon as possible, and inflate them to the proper pressure. Driving on a significantly under-inflated tire causes the tire to overheat and can lead to tire failure. Under-inflation also reduces fuel efficiency and tire tread life, and may affect the vehicle's handling and stopping ability.

Please note that the TPMS is not a substitute for proper tire maintenance, and it is the driver's responsibility to maintain correct tire pressure, even if under-inflation has not reached the level to trigger illumination of the TPMS low tire pressure telltale.

Your vehicle has also been equipped with a TPMS malfunction indicator to indicate when the system is not operating properly. The TPMS malfunction indicator is combined with the low tire pressure telltale. When the system detects a malfunction, the telltale will flash for approximately one minute and then remain continuously illuminated. This sequence will continue upon subsequent vehicle start-ups as long as the malfunction exists. When the malfunction indicator is illuminated, the system may not be able to detect or signal low tire pressure as intended. TPMS malfunctions may occur for a variety of reasons, including the installation of replacement or alternate tires or wheels on the vehicle that prevent the TPMS from functioning properly. Always check the

TPMS malfunction telltale after replacing one or more tires or wheels on your vehicle to ensure that the replacement or alternate tires and wheels allow the TPMS to continue to function properly.

Additional information

- Since the spare tire is not equipped with the TPMS, the TPMS does not monitor the tire pressure of the spare tire.
- The TPMS will activate only when the vehicle is driven at speeds above 16 MPH (25 km/h). Also, this system may not detect a sudden drop in tire pressure (for example, a flat tire while driving).
- The low tire pressure warning light does not automatically turn off when the tire pressure is adjusted. After the tire is inflated to the recommended pressure, the vehicle must be driven at speeds above 16 MPH (25 km/h) to activate the TPMS and turn off the low tire pressure warning light. Use a tire pressure gauge to check the tire pressure.
- The "Tire Pressure Low Add Air" warning appears in the vehicle information display when the low tire pressure warning light is illuminated and low tire pressure is detected. The "Tire Pressure Low Add Air" warning turns off when the low tire pressure warning light turns off.
  The "Tire Pressure Low Add Air" warning appears each time the ignition switch is placed in the ON position as long as the low tire pressure warning light remains illuminated.
  The "Tire Pressure Low Add Air" warning does not appear if the low tire pressure warning light illuminates to indicate a TPMS malfunction.
- Tire pressure rises and falls depending on the heat caused by the vehicle's operation and the outside temperature. Do not reduce the tire pressure after driving because the tire pressure rises after driving. Low outside temperature can lower the temperature of the air inside the tire which can cause a lower tire inflation pressure. This may cause the low tire pressure warning light to illuminate. If the warning light illuminates in low ambient temperature, check the tire pressure for all four tires.
- Depending on a change in the outside temperature, the low tire pressure warning light may illuminate even if the tire pressure has been adjusted properly. Adjust the tire pressure to the recommended COLD tire pressure again when the tires are cold.
- You can also check the pressure of all tires (except the spare tire) on the vehicle information display. (See "Tire Pressures" (P.139).)

For additional information, see "Low tire pressure warning light" (P.107) and "Tire Pressure Monitoring System (TPMS)" (P.443).

⚠ WARNING

- **If the low tire pressure warning light illuminates while driving, avoid sudden steering maneuvers or abrupt braking, reduce vehicle speed, pull off the road to a safe location and stop the vehicle as soon as possible. Driving with under-inflated tires may permanently damage the tires and increase the likelihood of tire failure. Serious vehicle damage could occur and may lead to an accident and could result in serious personal injury. Check the tire pressure for all four tires. Adjust the tire pressure to the recommended COLD tire pressure shown on the Tire and Loading Information label to turn the low tire pressure warning light OFF. If the light still illuminates while driving after adjusting the tire pressure, a tire may be flat or the TPMS may be malfunctioning. If you have a flat tire, replace it with a spare tire as soon as possible. If no tire is flat and all tires are properly inflated, it is recommended you consult a NISSAN dealer.**

- **Since the spare tire is not equipped with the TPMS, when a spare tire is mounted or a wheel is replaced, the TPMS will not function and the low tire pressure warning light will flash for approximately 1 minute. The light will remain on after 1 minute. Have your tires replaced and/or TPMS system reset as soon as possible. It is recommended you visit a NISSAN dealer for these services.**
- **Replacing tires with those not originally specified by NISSAN could affect the proper operation of the TPMS.**
- **Do not inject any tire liquid or aerosol tire sealant into the tires, as this may cause a malfunction of the tire pressure sensors.**
- **To help avoid serious personal injury or death, when checking your tire pressure, either as part of routine maintenance or because of a TPMS alert, please check the pressure in all of your tires. Driving on under-inflated tires can cause tire failure and interfere with the proper operation of other vehicle systems.**

⚠ CAUTION

- **The TPMS may not function properly when the wheels are equipped with tire chains or the wheels are buried in snow.**
- **Do not place metalized film or any metal parts (antenna, etc.) on the windows. This may cause poor reception of the signals from the tire pressure sensors, and the TPMS will not function properly.**

Some devices and transmitters may temporarily interfere with the operation of the TPMS and cause the low tire pressure warning light to illuminate. Some examples are:

- Facilities or electric devices using similar radio frequencies are near the vehicle.
- If a transmitter set to similar frequencies is being used in or near the vehicle.
- If a computer (or similar equipment) or a DC/AC converter is being used in or near the vehicle.

Low tire pressure warning light may illuminate in the following cases.

- If the vehicle is equipped with a wheel and tire without TPMS.
- If the TPMS has been replaced and the ID has not been registered.
- If the wheel is not originally specified by NISSAN.

NOTE:
FCC Notice:
For USA:
This device complies with Part 15 of the FCC Rules. Operation is subject to the following two conditions: (1) this device may not cause harmful interference, and (2) this device must accept any interference received, including interference that may cause undesired operation.
NOTE:
Changes or modifications not expressly approved by the party responsible for compliance could void the user's authority to operate the equipment.
For Canada:
This device contains licence-exempt transmitter(s)/receiver(s) that comply with Innovation, Science and Economic Development Canada's licence-exempt RSS(s). Operation is subject to the following two conditions: (1) This device may not cause interference. (2) This device must accept any interference, including interference that may cause undesired operation of the device.

TPMS with Easy Fill Tire Alert

When adding air to an under-inflated tire, the TPMS with Easy Fill Tire Alert provides visual and audible signals outside the vehicle to help you inflate the tires to the recommended COLD tire pressure.

Vehicle set-up:

1. Park the vehicle in a safe and level place.
2. Apply the parking brake and shift the transmission in the P (Park) position.
3. Place the ignition switch in the ON position. Do not start the engine.

Operation:

1. Add air to the tire.
2. After a few seconds, the hazard indicators will start flashing.
3. When the designated pressure is reached, the horn beeps once and the hazard indicators stop flashing.
4. Perform the above steps for each tire.

- If the tire is over-inflated more than approximately 4 psi (30 kPa), the horn beeps and the hazard indicators flash 3 times. To correct the pressure, push the core of the valve stem on the tire briefly to release pressure. When the pressure reaches the designated pressure, the horn beeps once.
- If the hazard indicator does not flash within approximately 15 seconds after starting to inflate the tire, it indicates that the Easy Fill Tire Alert is not operating.
- The TPMS will not activate the Easy Fill Tire Alert under the following conditions:
  - If there is interference from an external device or transmitter
  - The air pressure from the inflation device such as those using a power socket is not sufficient to inflate the tire
  - If an electrical equipment is being used in or near the vehicle
  - There is a malfunction in the TPMS system
  - There is a malfunction in the horn or hazard indicators
- If the Easy Fill Tire Alert does not operate due to TPMS interference, move the vehicle about 3 ft (1m) backward or forward and try again.

If the Easy Fill Tire Alert is not working, use a tire pressure gauge.

AVOIDING COLLISION AND ROLLOVER

⚠ WARNING

Failure to operate this vehicle in a safe and prudent manner may result in loss of control or an accident.

Be alert and drive defensively at all times. Obey all traffic regulations. Avoid excessive speed, high speed cornering, or sudden steering maneuvers, because these driving practices could cause you to lose control of your vehicle. **As with any vehicle, a loss of control could result in a collision with other vehicles or objects, or cause the vehicle to rollover, particularly if the loss of control causes the vehicle to slide sideways.** Be attentive at all times, and avoid driving when tired. Never drive when under the influence of alcohol or drugs (including prescription or over-the-counter drugs which may cause drowsiness). Always wear your seat belt as outlined in the "Seat belts" (P.35), and also instruct your passengers to do so.

Seat belts help reduce the risk of injury in collisions and rollovers.

In a rollover crash, an unbelted or improperly belted person is significantly more likely to be injured or killed than a person properly wearing a seat belt.

ON-PAVEMENT AND OFF-ROAD DRIVING PRECAUTIONS

Utility vehicles have a significantly higher rollover rate than other types of vehicles.

They have higher ground clearance than passenger cars to make them capable of performing in a variety of on-pavement and off-road applications. This gives them a higher center of gravity than ordinary cars. An advantage of higher ground clearance is a better view of the road, allowing you to anticipate problems. However, they are not designed for cornering at the same speeds as conventional passenger cars any more than low-slung sports cars are designed to perform satisfactorily under off-road conditions. If at all possible, avoid sharp turns or abrupt maneuvers, particularly at high speeds. As with other vehicles of this type, failure to operate this vehicle correctly may result in loss of control or vehicle rollover.

Seat belts help reduce the risk of injury in collisions and rollovers.

In a rollover crash, an unbelted or improperly belted person is significantly more likely to be injured or killed than a person properly wearing a seat belt.

Be sure to read "Driving safety precautions" (P.295).

OFF-ROAD RECOVERY

While driving, the right side or left side wheels may unintentionally leave the road surface. If this occurs, maintain control of the vehicle by following the procedure below. Please note that this procedure is only a general guide. The vehicle must be driven as appropriate based on the conditions of the vehicle, road and traffic.

1. Remain calm and do not overreact.
2. Do not apply the brakes.
3. Maintain a firm grip on the steering wheel with both hands and try to hold a straight course.
4. When appropriate, slowly release the accelerator pedal to gradually slow the vehicle.
5. If there is nothing in the way, steer the vehicle to follow the road while the vehicle speed is reduced. Do not attempt to drive the vehicle back onto the road surface until vehicle speed is reduced.
6. When it is safe to do so, gradually turn the steering wheel until both tires return to the road surface. When all tires are on the road surface, steer the vehicle to stay in the appropriate driving lane.
   - If you decide that it is not safe to return the vehicle to the road surface based on vehicle, road or traffic conditions, gradually slow the vehicle to a stop in a safe place off the road.

RAPID AIR PRESSURE LOSS

Rapid air pressure loss or a "blow-out" can occur if the tire is punctured or is damaged due to hitting a curb or pothole. Rapid air pressure loss can also be caused by driving on under-inflated tires.

Rapid air pressure loss can affect the handling and stability of the vehicle, especially at highway speeds.

Help prevent rapid air pressure loss by maintaining the correct air pressure and visually inspect the tires for wear and damage. See "Tire wear and damage" (P.499).

If a tire rapidly loses air pressure or "blows-out" while driving maintain control of the vehicle by following the procedure below. Please note that this procedure is only a general guide. The vehicle must be driven as appropriate based on the conditions of the vehicle, road and traffic.

⚠ WARNING

The following actions can increase the chance of losing control of the vehicle if there is a sudden loss of tire air pressure. Losing control of the vehicle may cause a collision and result in personal injury.

- **The vehicle generally moves or pulls in the direction of the flat tire.**
- **Do not rapidly apply the brakes.**
- **Do not rapidly release the accelerator pedal.**
- **Do not rapidly turn the steering wheel.**

1. Remain calm and do not overreact.
2. Maintain a firm grip on the steering wheel with both hands and try to hold a straight course.
3. When appropriate, slowly release the accelerator pedal to gradually slow the vehicle.
4. Gradually steer the vehicle to a safe location off the road and away from traffic if possible.
5. Lightly apply the brake pedal to gradually stop the vehicle.
6. Turn on the hazard warning flashers and either contact a roadside emergency service to change the tire or see "Changing a flat tire" (P.444).

ABOUT LOWERING OF THE VEHICLE BODY (if so equipped)

If the loaded vehicle with air suspension system is not moved for a long time, the vehicle body may be lowered. This is normal. Once the engine starts, it will automatically adjust vehicle height.

DRINKING ALCOHOL/DRUGS AND DRIVING

⚠ WARNING

Never drive under the influence of alcohol or drugs. Alcohol in the bloodstream reduces coordination, delays reaction time and impairs judgement. Driving after drinking alcohol increases the likelihood of being involved in an accident injuring yourself and others. Additionally, if you are injured in an accident, alcohol can increase the severity of the injury.

NISSAN is committed to safe driving. However, you must choose not to drive under the influence of alcohol. Every year thousands of people are injured or killed in alcohol-related accidents. Although the local laws vary on what is considered to be legally intoxicated, the fact is that alcohol affects all people differently and most people underestimate the effects of alcohol.

Remember, drinking and driving don't mix! And that is true for drugs, too (over-the-counter, prescription, and illegal drugs). Don't drive if your ability to operate your vehicle is impaired by alcohol, drugs, or some other physical condition.

FOR NISMO MODELS

The NISMO models have unique front spoiler, side sill extensions, and front and rear bumpers. These parts are close to the ground, and this model is not designed for off-road (rough road) use. If the vehicle is driven under such a condition, it may damage the front spoiler, side sill extensions, and front and rear bumpers .

DRIVING SAFETY PRECAUTIONS

Your NISSAN is designed for both normal and off-road use. However, avoid driving in deep water or mud as your NISSAN is mainly designed for leisure use, unlike a conventional off-road vehicle.

Remember that Two-Wheel Drive (2WD) models are less capable than Four-Wheel Drive (4WD) models for rough road driving and extrication when stuck in deep snow, mud, or the like.

Please observe the following precautions:

⚠ WARNING

- **Drive carefully when off the road and avoid dangerous areas. Every person who drives or rides in this vehicle should be seated with their seat belt fastened. This will keep you and your passengers in position when driving over rough terrain.**
- **Do not drive across steep slopes. Instead drive either straight up or straight down the slopes. Off-road vehicles can tip over sideways much more easily than they can forward or backward.**
- **Many hills are too steep for any vehicle. If you drive up them, you may stall. If you drive down them, you may not be able to control your speed. If you drive across them, you may roll over.**
- **Do not shift ranges while driving on downhill grades as this could cause loss of control of the vehicle.**
- **Stay alert when driving to the top of a hill. At the top there could be a drop-off or other hazard that could cause an accident.**

- **If your engine stalls or you cannot make it to the top of a steep hill, never attempt to turn around. Your vehicle could tip or roll over. Always back straight down in R (Reverse) range. Never back down in N (Neutral), using only the brake, as this could cause loss of control.**
- **Heavy braking going down a hill could cause your brakes to overheat and fade, resulting in loss of control and an accident. Apply brakes lightly and use a low range to control your speed.**
- **Unsecured cargo can be thrown around when driving over rough terrain. Properly secure all cargo so it will not be thrown forward and cause injury to you or your passengers.**
- **To avoid raising the center of gravity excessively, do not exceed the rated capacity of the roof rack (if so equipped) and evenly distribute the load. Secure heavy loads in the cargo area as far forward and as low as possible. Do not equip the vehicle with tires larger than specified in this manual. This could cause your vehicle to roll over.**
- **Do not grip the inside or spokes of the steering wheel when driving off-road. The steering wheel could move suddenly and injure your hands. Instead drive with your fingers and thumbs on the outside of the rim.**
- **Before operating the vehicle, ensure that the driver and all passengers have their seat belts fastened.**
- **Always drive with the floor mats in place as the floor may became hot.**
- **Lower your speed when encountering strong crosswinds. With a higher center of gravity, your NISSAN is more affected by strong side winds. Slower speeds ensure better vehicle control.**
- **Do not drive beyond the performance capability of the tires, even with 4WD engaged.**
- **For 4WD equipped vehicles, do not attempt to raise two wheels off the ground and shift the transmission to any drive or reverse position with the engine running. Doing so may result in drivetrain damage or unexpected vehicle movement which could result in serious vehicle damage or personal injury.**
- **Do not attempt to test a 4WD equipped vehicle on a 2-wheel dynamometer (such as the dynamometers used by some states for emissions testing), or similar equipment even if the other two wheels are raised off the ground. Make sure you inform test facility personnel that your vehicle is equipped with 4WD before it is placed on a dynamometer. Using the wrong test equipment may result in drivetrain damage or unexpected vehicle movement which could result in serious vehicle damage or personal injury (4WD models).**
- **When a wheel is off the ground due to an unlevel surface, do not spin the wheel excessively.**
- **Accelerating quickly, sharp steering maneuvers or sudden braking may cause loss of control.**
- **If at all possible, avoid sharp turning maneuvers, particularly at high speeds. Your vehicle has a higher center of gravity than a conventional passenger car. The vehicle is not designed for cornering at the same speeds as conventional passenger cars. Failure to operate this vehicle correctly could result in loss of control and/or a rollover accident.**

- **Always use tires of the same type, size, brand, construction (bias, bias-belted or radial), and tread pattern on all four wheels. Install tire chains on the rear wheels when driving on slippery roads and drive carefully.**
- **Be sure to check the brakes immediately after driving in mud or water. See "Brake system" (P.419) for wet brakes.**
- **Avoid parking your vehicle on steep hills. If you get out of the vehicle and it rolls forward, backward or sideways, you could be injured.**
- **Whenever you drive off-road through sand, mud or water as deep as the wheel hub, more frequent maintenance may be required. See the maintenance schedules shown in the "9. Maintenance and schedules" section.**
- **Spinning the rear wheels on slippery surfaces may cause the 4WD warning message displayed. The 4WD system may also automatically switch from the 4WD mode to the 2WD mode. This could reduce traction. Be especially careful when towing a trailer (4WD models).**

BASIC INFORMATION

⚠ WARNING

Do not operate the push-button ignition switch while driving the vehicle except in an emergency. (The engine will stop when the ignition switch is pushed 3 consecutive times or the ignition switch is pushed and held for more than 2 seconds.) If the engine stops while the vehicle is being driven, this could lead to a crash and serious injury.

Before operating the push-button ignition switch, be sure to push the park button to shift to the P (Park) position.

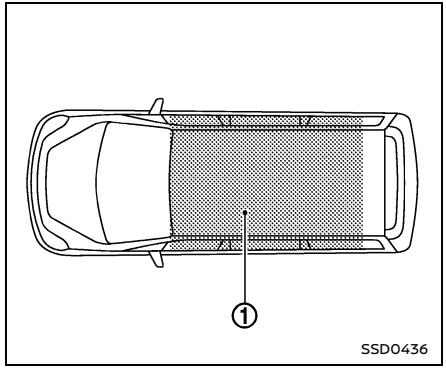

OPERATING RANGE FOR ENGINE START FUNCTION

The Intelligent Key can only be used for starting the engine when the Intelligent Key is within the specified operating range ①.

When the Intelligent Key battery is almost discharged or strong radio waves/noises are present near the operating location, the Intelligent Key system's operating range becomes narrower and may not function properly.

If the Intelligent Key is within the operating range, it is possible for anyone, even someone who does not carry the Intelligent Key, to push the ignition switch to start the engine.

- The cargo room area is not included in the operating range but the Intelligent Key may function.
- If the Intelligent Key is placed on the instrument panel, inside the glove box or door pocket, the Intelligent Key may not function.
- If the Intelligent Key is placed near the door or window outside the vehicle, the Intelligent Key may function.

If the battery of the Intelligent Key is discharged, see "Intelligent Key battery discharge" (P.299).

PUSH-BUTTON IGNITION SWITCH OPERATION

⚠ CAUTION

- **Do not leave the vehicle for extended periods of time when the ignition switch is in the ON position and the engine is not running. This can discharge the battery.**
- **Use electrical accessories with the engine running to avoid discharging the vehicle battery. If you must use accessories while the engine is not running, do not use them for extended periods of time and do not use multiple electrical accessories at the same time.**

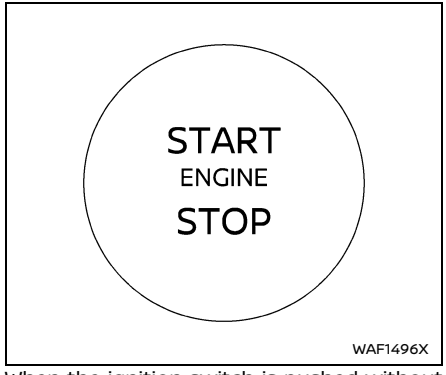

When the ignition switch is pushed without depressing the brake pedal, the ignition switch will illuminate.

Push the ignition switch center:

- once to change to ON.
- two times to change to OFF.

When the ignition switch cannot be placed in the OFF position, proceed as follows:

1. Push the park button to shift to the P (Park) position.
2. Push the ignition switch. The ignition switch position will change to the ON position.
3. Push the ignition switch again to the OFF position.

The shift position can be shifted from the P (Park) position if the ignition switch is in the ON position and the brake pedal is depressed.

PUSH-BUTTON IGNITION SWITCH POSITIONS

ON (Normal operating position)

The ignition system and the electrical accessory power activate at this position without the engine turned on.

The ON position has a battery saver feature that will place the ignition switch in the OFF position, if the vehicle is not running, after some time under the following conditions:

- all doors are closed.
- vehicle is in P (Park) position.

OFF position

The engine is turned off in this position.

Auto ACC position

With the vehicle in the P (Park) position, the Intelligent Key with you and the ignition placed from ON to OFF, the outside rearview mirror remote control, etc. can still be used for a period of time.

Depending on the conditions, the Auto ACC function may not be activated or may continue for a shorter period of time than usual. In this case, the function related to the Auto ACC function may not be activated.

EMERGENCY ENGINE SHUT OFF

To shut off the engine in an emergency situation while driving or when the Intelligent

Key battery is discharged, perform the following procedure:

- Push and hold the push-button ignition switch for more than 2 seconds, or
- When the vehicle is driving, rapidly push the push-button ignition switch 3 consecutive times in less than 1.5 seconds.

After engine shut-off, open the door to return to the normal condition.

AUTOMATIC ENGINE SHUT-OFF

This system shuts off the engine automatically after an extended period of time if it has been left running while the transmission is in the P (Park) position. This helps avoid unintentional idling, which can waste fuel.

The last 30 seconds of engine run time will be indicated in the vehicle information display. At this time you can use the scroll dial on the steering wheel to select one of the following options:

- "OK" to clear the display and allow the system to shut off the engine. The engine will also shut off if nothing is selected.
- "Disable" to prevent the system from shutting off the engine for the remainder of this trip. The system cannot be cancelled permanently.

NOTE:

- **The timer that monitors idling will restart if the brake pedal or accelerator pedal is pressed, delaying the automatic engine shut-off activation.**
- **The system will automatically turn back on after the engine is restarted.**

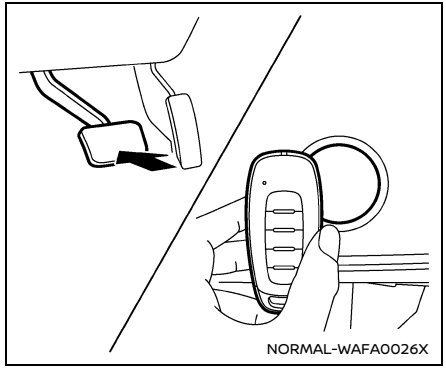
NORMAL-WAFA0026X

INTELLIGENT KEY BATTERY DISCHARGE

If the battery of the Intelligent Key is discharged, or environmental conditions interfere with the Intelligent Key operation, start the engine according to the following procedure:

1. Push the park button to shift to the P (Park) position.
2. Firmly apply the foot brake.
3. Touch the ignition switch with the Intelligent Key as illustrated. (A chime will sound.)
4. Push the ignition switch while depressing the brake pedal within 10 seconds after the chime sounds. The engine will start.

After step 3 is performed, when the ignition switch is pushed without depressing the brake pedal, the ignition switch position will change to ON.

NOTE:

- **When the ignition switch is pushed to the ON position or the engine is started by the above procedures, the "Key Battery Low" warning appears (on the vehicle information display) even if the Intelligent Key is inside the vehicle. This is not a malfunction. To turn off the warning, touch the ignition switch with the Intelligent Key again.**
- **If the "Key Battery Low" warning appears, replace the battery as soon as possible. (See "Intelligent Key battery replacement" (P.486).)**

- Make sure the area around the vehicle is clear.
- Check fluid levels such as engine oil, coolant, brake fluid and window washer fluid as frequently as possible, or at least whenever you refuel.
- Check that all windows and lights are clean.
- Visually inspect tires for their appearance and condition. Measure and check the tire pressure for proper inflation.
- Lock all doors.
- Position seat and adjust head restraints/headrests.
- Adjust inside and outside mirrors.
- Fasten seat belts and ask all passengers to do likewise.
- Check the operation of warning lights when the ignition switch is pushed to the ON position. (See "Warning lights, indicator lights and audible reminders" (P.102).)

BASIC INFORMATION

1. Apply the parking brake.
2. Confirm that the vehicle is in the P (Park) position.
   The Intelligent Key must be carried when operating the ignition switch.
3. Push the ignition switch to the ON position. Depress the brake pedal and push the ignition switch to start the engine.

NOTE:

Depending on the condition, the brake pedal stroke may be longer than usual. This does not indicate a malfunction.

To start the engine immediately, push and release the ignition switch while depressing the brake pedal with the ignition switch in any position.

- If the engine is very hard to start in extremely cold weather or when restarting, depress the accelerator pedal a little (approximately 1/3 to the floor) and while holding, crank the engine. Release the accelerator pedal when the engine starts.
- If the engine is very hard to start because it is flooded, depress the accelerator pedal all the way to the floor and hold it. Push the ignition switch to the ON position to start cranking the engine. After 5 or 6 seconds, stop cranking by pushing the ignition switch to OFF. After cranking the engine, release the accelerator pedal. Crank the engine **with your foot off the accelerator pedal** by

depressing the brake pedal and pushing the push-button ignition switch to start the engine. If the engine starts, but fails to run, repeat the above procedure.

⚠ CAUTION

Do not operate the starter for more than 30 seconds at a time. If the engine does not start, push the ignition switch to OFF and wait 10 seconds before cranking again, otherwise the starter could be damaged.

4. **Warm-up**
   Allow the engine to idle for at least 30 seconds after starting. Do not race the engine while warming it up. Drive at moderate speed for a short distance first, especially in cold weather. In cold weather, keep the engine running for a minimum of 2 - 3 minutes before shutting it off. Starting and stopping the engine over a short period of time may make the vehicle more difficult to start.
   When the engine is racing with no load, the engine speed is limited to about 3,000 rpm.
5. To stop the engine, push the shift button "P" to shift to the P (Park) position, and push the ignition switch to the OFF position.

NOTE:
Care should be taken to avoid situations that can lead to potential battery discharge and potential no-start conditions such as:
1. **Installation or extended use of electronic accessories that consume battery power when the engine is not running (Phone chargers, GPS, DVD players, etc.)**
2. **Vehicle is not driven regularly and/or only driven short distances.**

In these cases, the battery may need to be charged to maintain battery health.

REMOTE ENGINE START

Vehicles started with the remote engine start function require the ignition switch to be placed in the ON position before the shift position can be shifted from the P (Park) position. To place the ignition switch in the ON position, perform the following steps:
1. Make sure that the Intelligent Key is carried with you.
2. Depress the brake pedal.
3. Push the ignition switch once to the ON position.

For additional information about the remote engine start function, see "Remote engine start" (P.209).

ENGINE PROTECTION MODE

The engine has an engine protection mode to reduce the chance of damage if the coolant temperature becomes too high (for example, when climbing steep grades in high temperature with heavy loads, such as when towing a trailer).
When the engine temperature reaches a certain level:
- The engine coolant temperature gauge will move toward the H position.
- Engine power may be reduced.
- The air conditioning cooling function may be automatically turned OFF for a short time (the blower will continue to operate).

Engine power and, under some conditions, vehicle speed will decrease. Vehicle speed can be controlled with the accelerator pedal, but the vehicle may not accelerate at the desired speed. The transmission will downshift or upshift as it reaches prescribed shift points. You can also shift manually.
As driving conditions change and engine coolant temperature is reduced, vehicle speed can be increased using the accelerator pedal, and air conditioning cooling function will automatically be turned back ON.
If:
1. The engine coolant temperature is not reduced.
2. The air conditioning cooling function does not turn back ON.
3. The engine oil pressure warning light illuminates or engine coolant

temperature gauge does not return to the normal range from the H position, this may indicate a malfunction. Move the vehicle off the road to a safe area and allow the engine to cool. If after checking the oil and coolant, the , remains on or engine coolant temperature does not return to the normal range, do not continue to drive. It is recommended you contact a NISSAN dealer.

The Malfunction Indicator Light (MIL) may also come ON. You do not need to have your vehicle towed, unless it remains on, but have it inspected soon. It is recommended you visit a NISSAN dealer for this service. See "Warning lights, indicator lights and audible reminders" (P.102).

⚠ WARNING

Overheating can result in reduced engine power and vehicle speed. The reduced speed may be lower than other traffic, which could increase the chance of a collision. Be especially careful when driving. If the vehicle cannot maintain a safe driving speed, pull to the side of the road in a safe area. Allow the engine to cool and return to normal operation. See "If your vehicle overheats" (P.453).

⚠ CAUTION

Running the engine with the engine oil pressure warning light on could cause serious damage to the engine almost immediately. Such damage is not covered by warranty. Turn off the engine as soon as it is safe to do so.

AUTOMATIC TRANSMISSION (AT)

9 speed automatic transmission

The automatic transmission in your vehicle is electronically controlled by a transmission control module to produce maximum efficiency and smooth operation.

Shown on the following pages are the recommended operating procedures for this transmission. Follow these procedures for maximum vehicle performance and driving enjoyment.

Starting the vehicle

After starting the engine, fully depress the foot brake pedal and push the shift button R (Reverse), N (Neutral) or D (Drive)/M (Manual shift mode) position. Be sure the vehicle is fully stopped before attempting to shift the transmission.

This automatic transmission model is designed so that the foot brake pedal must be depressed before shifting from P (Park) to any drive position while the ignition switch position is ON.

The shift position other than P (Park) cannot be selected if the ignition switch is pushed to the OFF or Auto ACC position.

1. Keep the foot brake pedal depressed and push R (Reverse) or D (Drive) button to shift into a driving gear.
2. Release the parking brake and foot brake, then gradually start the vehicle in motion.

⚠ WARNING

- **Do not depress the accelerator pedal while shifting from P (Park) or N (Neutral) to R (Reverse), D (Drive) or manual shift mode. Always depress the brake pedal until shifting is completed. Failure to do so could cause you to lose control and have an accident.**
- **Cold engine idle speed is high, so use caution when shifting into a forward or reverse gear before the engine has warmed up.**
- **Never shift to either P (Park) or R (Reverse) position while the vehicle is moving forward and P (Park) or D (Drive) position while the vehicle is moving reversing. This could cause an accident or damage the transmission.**
- **Do not downshift abruptly on slippery roads. This may cause a loss of control.**

⚠ CAUTION

- **To avoid possible damage to your vehicle; when stopping the vehicle on an uphill grade, do not hold the vehicle by depressing the accelerator pedal. The foot brake should be used for this purpose.**
- **Except in an emergency, do not shift to the N (Neutral) position while driving. Coasting with the transmission in the N (Neutral) position may cause serious damage to the transmission.**

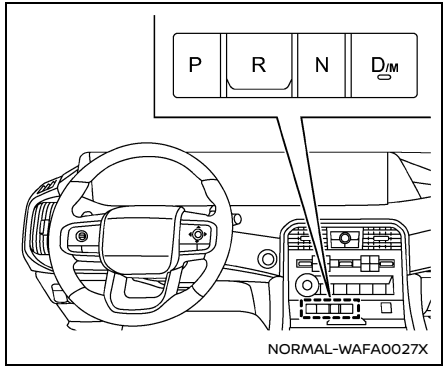

NORMAL-WAFA0027X

Shifting

After starting the engine, fully depress the brake pedal and push the shift button to the R (Reverse), N (Neutral) or D (Drive)/M (Manual shift mode) position.

After operating the shift button, make sure that the shift position is switched to the intended one.

NOTE:

- **If all of the following conditions have been met, the shift position may be changed to the P (Park) position automatically.**
  - **When the vehicle is stopped.**
  - **When the driver's seat belt is unfastened.**
  - **When the driver's door is opened.**
- **The vehicle automatically applies the P (Park) position when the ignition switch is placed in the OFF position. However, if the electric shift control system malfunctions and you try to place the ignition switch to the OFF position when the shift position is other than P (Park), a buzzer will sound and you will not be able to place the ignition switch to OFF. If this occurs, follow the steps below.**
  1) **Stop the vehicle and apply the parking brake.**
  2) **While depressing the brake pedal, push the ignition switch to the ON position.**
  3) **Push the P button to change the transmission to P (Park) position.**
  4) **Push the ignition switch to the OFF position.**

⚠ WARNING

- **If you use an implantable cardiac pacemaker, an implantable cardioverter defibrillator (ICD) or other medical devices, keep the implanted body parts away from the shift button. The strong magnet in shift button may affect the operation of medical devices.**
- **Keep magnetic cards or things with magnetic force away from the shift button. It may cause malfunction and lead to an accident.**

- **Apply the parking brake if the transmission is in any position while the engine is not running. Failure to do so could cause the vehicle to move unexpectedly or roll away and result in serious personal injury or property damage.**
- **On a hilly road, do not allow the vehicle to roll backwards while in the D (Drive) position or M position, or allow the vehicle to roll forward while in the R (Reverse) position. This may cause an accident.**

⚠ CAUTION

Make sure the vehicle is completely stopped and the transmission is in the P (Park) position.

P (Park) position:

Use this position when the vehicle is parked or when starting the engine. Make sure the vehicle is completely stopped. **The brake pedal must be depressed to change the shift position from the N (Neutral) position or any drive position to the P (Park) position.** Apply the parking brake. When parking on a hill, apply the parking brake first, then select the P (Park) position.

⚠ CAUTION

Use this position only when the vehicle is completely stopped.

NOTE:
- **While the vehicle is stationary, if the shift position is placed in any position other than the P (Park) position when the ignition switch is placed in the OFF position, it will automatically switch to the P (Park) position.**
- **When the P (Park) position button is pushed while driving, the operation is canceled. (A buzzer sounds and the shift position before being operated is maintained.)**

R (Reverse):

Use this position to back up. Always be sure the vehicle is completely stopped before selecting the R (Reverse) position. **The brake pedal must be depressed to change the shift position from the P (Park) position, the N (Neutral) position or any drive position to the R (Reverse) position.**
If the vehicle is shifted to the R (Reverse) position while the vehicle is moving forward, the chime will sound and the vehicle will switch into the N (Neutral) position.

N (Neutral):

Neither forward nor reverse gear is engaged. The engine can be started in this position. You may select the N (Neutral) position and restart a stalled engine while the vehicle is moving.

D (Drive):

Use this position for all normal forward driving.
If the vehicle is placed in the D (Drive) position while the vehicle is reversing, the chime will sound and the vehicle will switch into the N (Neutral) position.

Neutral hold mode function

This function enables you to turn off the engine with the vehicle in the N (Neutral) position. While this function is activated, the vehicle can be moved by pushing with hand even if the ignition switch is in the OFF position. When using this function, release the parking brake.

⚠ WARNING

- **Use this function on a level surface only. Failure to do so may cause the vehicle to move accidentally and could result in a collision or serious personal injury.**
- **When the ignition switch is placed in the ON position after activating this function, depress the brake pedal to stop the vehicle because the shift position is in the N (Neutral) position.**

- **If this function is not activated regardless of proper operation, transmission may malfunction. It is recommended that you visit a NISSAN dealer for this service.**

To activate the Neutral hold mode, perform the following operations.

1. Push the ignition switch to start the engine.
2. Release the parking brake and Automatic brake hold function.
3. Depress the brake pedal to stop the vehicle in the desired location such as parking space, an automatic car wash entrance, etc.
4. Depress and hold the brake pedal through all steps listed below. Do not release it during the process to activate the Neutral hold mode.
5. Wait for 10 seconds without pushing any shift buttons.

NOTE:

It is necessary to perform the steps 6 through 8 within approximately 5 seconds.

6. Push the P (Park) position button and confirm the shift position indicator indicates the P (Park) position.
7. Push the shift button to the N (Neutral) position and confirm the shift position indicator indicates the N (Neutral) position and then release the shift button.
8. Push the N (Neutral) position button again. The Neutral Hold Mode activated indicator appears in the vehicle information display when the Neutral hold mode function is activated. (See "Neutral Hold Mode activated indicator" (P.135).)
9. Confirm that the parking brake is released.
10. Place the ignition switch in the OFF position. The engine will turn off with holding the N (Neutral) position.

To exit the Neutral hold mode, place the vehicle in other than N (Neutral) position.

NOTE:

- **If the parking brake is not released, release the parking brake. (See "Parking brake" (P.307).)**
- **When the ignition switch is placed in the OFF position while the shift position is in the N (Neutral) position, a message will appear in the vehicle information display. (See "Neutral Hold Mode guidance indicator" (P.135).)**
- **If the Neutral hold mode is unavailable, a message will appear in the vehicle information display. (See "Neutral Hold Mode was not activated indicator" (P.135).) To activate the Neutral hold mode, wait for a while without shifting operation and then perform the operations again.**

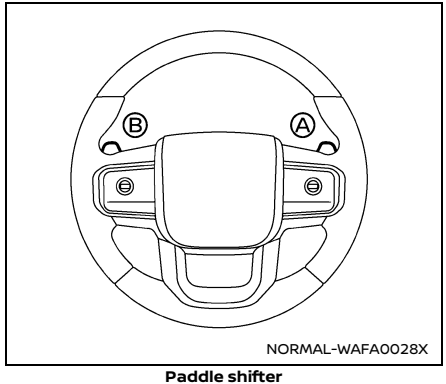

Paddle shifter

Manual shift mode

When the transmission is shifted to the D (Drive) position again with the vehicle in the D (Drive) position while driving, the transmission enters the manual shift mode. Shift range can be selected manually using the paddle shifters on the steering wheel.

When shifting up, pull the right-side paddle shifter (+) Ⓐ. The transmission shifts to the higher range.

When shifting down, pull the left-side paddle shifter (−) Ⓑ. The transmission shifts to the lower range.

When canceling the manual shift mode, shift the transmission to the D (Drive) position again. The transmission returns to the nor-

mal driving mode.

When you pull the paddle shifter while in the D (Drive) position, the transmission will shift to the upper or lower range temporarily. The transmission will automatically return to the D (Drive) position after a short period of time. If you want to return to the D (Drive) position manually, pull and hold the paddle shifter for about 1.5 seconds.

In the manual shift mode, the shift range is displayed in the vehicle information display.

Shift ranges up or down one by one as follows:

$$1 \underset{\leftarrow}{\rightarrow} 2 \underset{\leftarrow}{\rightarrow} 3 \underset{\leftarrow}{\rightarrow} 4 \underset{\leftarrow}{\rightarrow} 5 \underset{\leftarrow}{\rightarrow} 6 \underset{\leftarrow}{\rightarrow} 7 \underset{\leftarrow}{\rightarrow} 8 \underset{\leftarrow}{\rightarrow} 9$$

9^{M} (9th):

Use this position for all normal forward driving at highway speeds.

8^{M} (8th), 7^{M} (7th), 6^{M} (6th) and 5^{M} (5th):

Use these positions when driving up long slopes, or for engine braking when driving down long slopes.

4^{M} (4th), 3^{M} (3rd) and 2^{M} (2nd):

Use these positions for hill climbing or engine braking on downhill grades.

1^{M} (1st):

Use this position when climbing steep hills slowly or driving slowly through deep snow, or for maximum engine braking on steep downhill grades.

- Remember not to drive at high speeds for extended periods of time in lower than 7th gear. This reduces fuel economy.
- Pulling the same paddle shifter twice will shift the ranges in succession. However, if this motion is rapidly done, the second shifting may not be completed properly.
- **In the manual shift mode, the transmission may not shift to the selected gear. This helps maintain driving performance and reduces the chance of vehicle damage or loss of control.**
- **When this situation occurs, the Automatic Transmission (AT) position indicator will blink and the chime will sound.**
- **In the manual shift mode, the transmission may shift up automatically to a higher range than selected if the engine speed is too high. When the vehicle speed decreases, the transmission automatically shifts down and shifts to 1st gear before the vehicle comes to a stop.**

Accelerator downshift — In D (Drive) position —

For passing or hill climbing, fully depress the accelerator pedal to the floor. This shifts the transmission down into the lower gear, depending on the vehicle speed.

Fail-safe

When the fail-safe operation occurs, note that the transmission will be locked in any of the forward gears according to the condition.

If the vehicle is driven under extreme conditions, such as excessive wheel spinning and subsequent hard braking, the fail-safe system may be activated. This will occur even if all electrical circuits are functioning properly. In this case, push the switch to the OFF position and wait for 3 seconds. Then push the ignition switch back to the ON position. The vehicle should return to its normal operating condition. If it does not return to its normal operating condition, have the transmission checked and repaired, if necessary. It is recommended you visit a NISSAN dealer for this service.

PARKING BRAKE

BASIC INFORMATION

WARNING

- **Never drive the vehicle with the parking brake applied. The brake will overheat and fail to operate and will lead to an accident.**
- **Never release the parking brake from outside the vehicle. If the vehicle moves, it will be impossible to push the foot brake pedal and will lead to an accident.**
- **Never use the shift buttons in place of the parking brake. When parking, be sure the parking brake is fully applied.**
- **To help avoid risk of injury or death through unintended operation of the vehicle and/or its systems, do not leave children, people who require the assistance of others or pets unattended in your vehicle. Additionally, the temperature inside a closed vehicle on a warm day can quickly become high enough to cause a significant risk of injury or death to people and pets.**

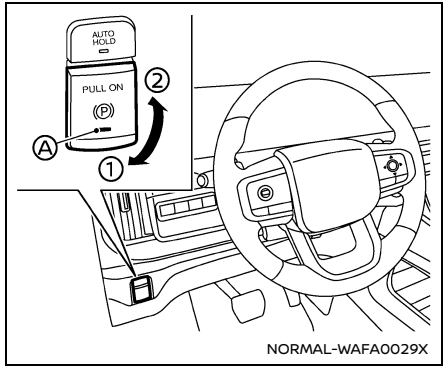

NORMAL-WAFA0029X

① Release
② Apply
Ⓐ Indicator light

The electronic parking brake can be applied or released automatically or by operating the parking brake switch.

AUTOMATIC OPERATION

The electronic parking brake is automatically released as soon as the vehicle starts while the accelerator pedal is depressed under the following conditions.

- While the engine is running.
- When the shift position is in the D (Drive) or R (Reverse) position.
- When the driver's door is closed.

The electronic parking brake is automatically released within 5 seconds after the shift position is placed in the D (Drive) or R (Reverse) position even if the driver's door is opened. Be sure to close the door before starting the vehicle.

WARNING

- **When the automatic brake hold function is activated, the electronic parking brake will not be automatically applied when the engine is stopped without using the ignition switch (for example, by engine stalling).**

  Without the vehicle stationary, the electronic parking brake will not be automatically applied even if the engine is turned off with the ignition switch.
- **Before leaving the vehicle, place the shift position in the P (Park) position and check that the electronic parking brake warning light is illuminated to confirm that the electronic parking brake is applied. The electronic parking brake warning light will remain on for a period of time after the driver's door is locked.**

⚠ CAUTION

When parking in an area where the outside temperature is below 32°F (0°C), the electronic parking brake, if applied, may freeze in place and may be difficult to release.

For safe parking, it is recommended that you place the shift position in the P (Park) position and securely block the wheels.

NOTE:

- **To keep the electronic parking brake released after the engine is turned off, place the ignition switch in the OFF position, depress the brake pedal and push down the parking brake switch before opening the driver's door.**
- **If a malfunction occurs in the electronic parking brake system (for example, due to battery discharge), it is recommended to contact a NISSAN dealer.**
- **Under the following conditions, the electronic parking brake will automatically be applied and the braking force of the automatic brake hold function will be released. The automatic brake hold indicator light on the meter turns off.**
  - **The braking force is applied by the automatic brake hold function for 3 minutes or longer.**
  - **The vehicle is in the P (Park) position.**
  - **The electronic parking brake is applied manually.**
  - **The driver's seat belt is unfastened.**
  - **The driver's door is opened.**
  - **The ignition switch is placed in the OFF position.**
  - **A malfunction occurs in the automatic brake hold function.**
- **Make sure that the electronic parking brake system warning light is OFF before starting the vehicle.**

MANUAL OPERATION

Basic information

To apply: When the vehicle is stopped and the ignition switch is in the ON or ACC position, pull the parking brake switch up. The indicator light on the switch and the electronic parking brake warning light PARK or Ⓟ (red) will illuminate.

To release: With the ignition switch in the ON position, depress the brake pedal and push the parking brake switch down. The indicator light and the electronic parking brake warning light (red) will turn off.

Before driving, check that the electronic parking brake warning light (red) turns off. For additional information, see "Warning lights, indicator lights and audible reminders" (P.102).

NOTE:

- **While the electronic parking brake is applied or released, an operating sound is heard from the lower side of the rear seat. This is normal and does not indicate a malfunction.**
- **When the electronic parking brake is frequently applied and released in a short period of time, the electronic parking brake system warning light may blink and the electronic parking brake may not operate in order to prevent the electronic parking brake system from overheating. If this occurs, operate the parking brake switch again after waiting approximately 1 minute.**
- **If the electronic parking brake must be applied while driving in an emergency, pull up and hold the parking brake switch. When you release the parking brake switch, the electronic parking brake will be released.**
- **While pulling up the parking brake switch during driving, the electronic parking brake is applied and a chime sounds. The electronic parking brake warning light (red) and the indicator light on the parking brake switch illuminate. This does not indicate a malfunction. The electronic parking brake warning light (red) and the indicator light on the parking brake switch will turn off when the electronic parking brake is released.**
- **When pulling the parking brake switch up with the ignition switch in the OFF**

position, the indicator light on the parking brake switch will continue to illuminate for a short period of time.

When towing a trailer

Depending on the weight of the vehicle and trailer and the steepness of the slope, there may be a tendency for the vehicle to move backwards when starting from a standstill. When this occurs, you can use the parking brake switch in the same way as a conventional lever type parking brake.

Before starting on sloping roads when towing a trailer, be sure to read the following to prevent the vehicle from moving backward unintentionally.

- Release the parking brake switch as soon as the engine is delivering enough torque to the wheels.

BASIC INFORMATION

The automatic brake hold function maintains the braking force without the driver having to depress the brake pedal when the vehicle is stopped at a traffic light or intersection. As soon as the driver depresses the accelerator pedal again, the automatic brake hold function is deactivated and the braking force is released. The operating status of the automatic brake hold function can be displayed. (See "Warning lights, indicator lights and audible reminders" (P.102).)

To use automatic brake hold function, the following conditions need to be met:

- The driver's seat belt is fastened.
- The electronic parking brake is released.
- The vehicle is not in the P (Park) position.
- The vehicle is not stopped on a steep hill.

⚠ WARNING

- **The automatic brake hold function is not designed to hold the vehicle on a steep hill or slippery road. Never use the automatic brake hold function when the vehicle is stopped on a steep hill or slippery road. Failure to do so may cause the vehicle to move.**
- **Warnings may appear to request that the driver retake control by depressing the brake pedal.**
- **When the automatic brake hold function is activated but fails to maintain the vehicle at a standstill, depress the brake pedal to stop the vehicle. If the vehicle unexpectedly moves due to outside conditions, the chime may sound and warnings may appear.**
- **Be sure to deactivate automatic brake hold function when using a car wash machine, towing your vehicle or overloaded.**
- **The automatic brake hold function will not be activated when the vehicle is in the 4L position (if so equipped). If the 4WD shift switch is shifted to the 4L position when the automatic brake hold function is activated, the braking force of the automatic brake hold function will be released.**
- **Make sure to engage the P (Park) position and apply the parking brake when parking your vehicle, entering or exiting the vehicle loading or unloading luggage. Failure to do so could cause the vehicle to move or roll away unexpectedly and result in serious personal injury or property damage.**

- **If any of the following conditions occur, the automatic brake hold function may not function. Have the system checked promptly. It is recommended that you visit a NISSAN dealer for this service. Failure to operate the vehicle in accordance with these conditions could cause the vehicle to move or roll away unexpectedly and result in serious personal injury or property damage.**
  - **A warning message appears.**
  - **The indicator light on the automatic brake hold switch does not illuminate when the switch is pushed.**
- **The automatic brake hold function will not be activated if the slip indicator light, electronic parking brake system warning light, electronic parking brake warning light or master warning light illuminates and the Chassis Control System Error warning message appears.**
- **To maintain the braking force to keep the vehicle to a standstill, a noise may be heard. This is not a malfunction.**
- **The automatic brake hold function is operated by applying sufficient brake force to hold the vehicle in its place, so there are cases when this hold function is maintained even if the accelerator pedal is depressed. In this situation, it is advised to depress the brake pedal first, then to turn off the automatic brake hold switch. This will cancel the hold function.**

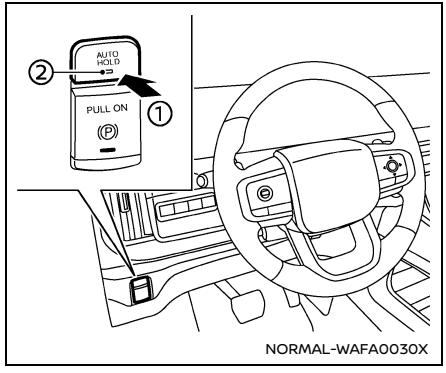

NORMAL-WAFA0030X

HOW TO ACTIVATE/DEACTIVATE THE AUTOMATIC BRAKE HOLD FUNCTION

How to activate the automatic brake hold function

1. With the ignition switch in the ON position, push the automatic brake hold switch ①. The indicator light on the automatic brake hold switch ② illuminates.
2. When the automatic brake hold function goes into standby, the automatic brake hold indicator light (white) illuminates.

To use the automatic brake hold function, the following conditions need to be met.

- The driver's seat belt is fastened.
- The electronic parking brake is released.

- The vehicle is not in the P (Park) position.
- The vehicle is not stopped on a steep hill.

NOTE:
The automatic brake hold function retains the last state until the driver changes the option even if the ignition switch is turned off.

How to deactivate the automatic brake hold function

While the automatic brake hold function is activated, push the automatic brake hold switch to turn off the automatic brake hold indicator light and deactivate the automatic brake hold function. To deactivate the automatic brake hold function while the brake force has been maintained by the automatic brake hold function, depress the brake pedal and push the automatic brake hold switch.

⚠ WARNING

Make sure to firmly depress and hold the brake pedal when turning off the automatic brake hold function while the brake force is applied. When the automatic brake hold function is deactivated, the brake force will be released. This could cause the vehicle to move or roll away unexpectedly.

Failure to prevent the vehicle from rolling may result in serious personal injury or property damage.

HOW TO USE THE AUTOMATIC BRAKE HOLD FUNCTION

Basic information

For additional information on using the automatic brake hold function, refer to the instructions outlined in this section.

To maintain braking force automatically

With the automatic brake hold function activated and the automatic brake hold indicator light (white) illuminated, depress the braking pedal to stop the vehicle and the automatic brake hold indicator light (green) illuminates. The brake force is automatically applied without your foot depressed on the brake pedal. While the brake force is maintained, the automatic brake hold indicator light (green) illuminates.

The automatic brake hold indicator light (green) will not illuminate if the brake pedal is not depressed with sufficient force to hold the vehicle or is released too quickly when the vehicle is stopped.

Confirm the automatic brake hold indicator light (green) is illuminated before removing your foot from the brake pedal.

To start the vehicle from a standstill

With the vehicle not in the P (Park) or the N (Neutral) position, depress the accelerator pedal while the brake force is maintained. The brake force will automatically be released to restart the vehicle. The automatic brake hold indicator light (white) illuminates and the automatic brake hold function returns to standby.

Parking

When the vehicle is in the P (Park) position with the brake force maintained by the automatic brake hold function, the electronic parking brake will automatically be applied and the brake force of the automatic brake hold function will be released. The automatic brake hold indicator light turns off. When the electronic parking brake is applied with the brake force maintained by the automatic brake hold function, the brake force of the automatic brake hold function will be released. The automatic brake hold indicator light on the meter turns off.

NOTE:
- **Under the following conditions, the electronic parking brake will automatically be applied and the braking force of the automatic brake hold function will be released (the automatic brake hold indicator light on the meter turns off):**
  - **The braking force is applied by the automatic brake hold function for 3 minutes or longer.**
  - **The vehicle is in the P (Park) position.**
  - **The electronic parking brake is applied manually.**
  - **The driver's seat belt is unfastened.**
  - **The driver's door is opened.**

- **– The ignition switch is placed in the OFF position.**
- **– A malfunction occurs in the automatic brake hold function.**

- **When the vehicle stops, but the brake force is not automatically applied, depress the brake pedal firmly until the automatic brake hold indicator light (green) illuminates.**
- **When the vehicle stops on a slope, depress the brake pedal firmly until the automatic brake hold indicator light (green) illuminates.**

DRIVE MODE SELECTOR (if so equipped)

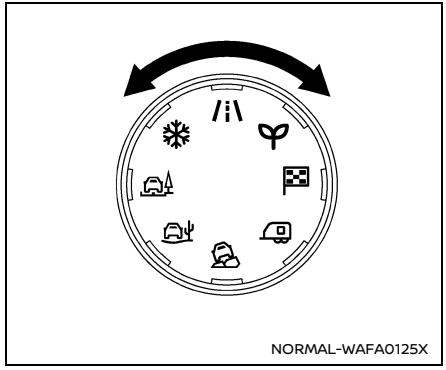

Drive Mode Selector (example)

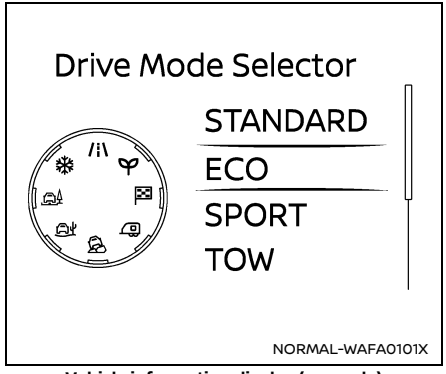

Vehicle information display (example)

BASIC INFORMATION

Multiple driving mode can be selected by using the Drive Mode Selector.

To change the mode, turn the Drive Mode Selector right or left.

NOTE:

- **When the Drive Mode Selector selects a mode, the mode may not switch immediately. This is not a malfunction.**
- **The drive mode will be set to STANDARD each time the ignition switch is placed in the ON position.**

The current mode is displayed in the vehicle information display. The mode list will appear in the vehicle information display and you can select the mode.

NOTE:

The mode list will be turned off in a few seconds after the mode is selected. (You can also clear the message by pushing the scroll dial on the steering wheel.)

If the driving mode cannot be switched using the Drive Mode Selector when the ignition switch is in the ON position, have the system checked. It is recommended you visit a NISSAN dealer for this service.

⚠ WARNING

Do not stare at the Drive Mode Selector or the display while driving so that full attention may be given to vehicle operation.

STANDARD MODE

The symbol of this mode is .
This is the standard mode that is most suitable for normal driving.

ECO MODE

Basic information

The symbol of this mode is .
When this mode is selected, the 4WD "4H" and "4L" mode cannot be selected. See "NISSAN All-Mode 4WD® (if so equipped)" (P.407) for details of the 4WD system (if so equipped).
Assists the driver's ECO-driving. The engine and transmission points are adjusted for improved fuel economy, providing such a driving features as smooth starting or constant cruising.

NOTE:

- **Selecting the ECO mode will not necessarily improve fuel economy as many driving factors influence its effectiveness.**
- **It is recommended to select other than ECO mode when acceleration is required such as when:**
  - **driving with a heavy load of passengers or cargo in the vehicle**
  - **driving on a steep uphill slope**

ECO Customize (if so equipped)

The ECO mode changes the air conditioning, cruise control, and idling stop settings to save fuel. You can use the ECO customize menu to adjust these settings to balance the fuel economy and performance for your preference. To activate or deactivate this function, see "ECO Mode Setting" (P.115).

- Cruise Control
  When the setting is set to ON, The cruise control acceleration characteristic is less aggressive to improve fuel efficiency. When the setting is OFF the cruise control uses the normal acceleration characteristics.

NOTE:
When the vehicle speed is reduced (for example, when the vehicle is driven on an uphill road from a flat road), it will take more time to return to the previously set speed than normal mode.

- Idling Stop
  When the setting is set to ON, when idling stop activates the engine remains off for a longer time than normal mode while using the air conditioner. This improves fuel efficiency by increasing engine off time when vehicle is stopped. For details about Idling Stop System, see "Idling Stop System" (P.432).
- Air Conditioning
  If the eco customize air conditioning control is set to ON, the fuel efficiency will be improved by reducing the performance of the air conditioning system.

Tire Pres ECO advice

The "Tire Pres ECO advice" is a function to show an ECO advice message in the vehicle information display when low tire pressure is detected. To activate or deactivate this function, see "ECO Mode Setting" (P.115).
When the setting is ON, the ECO Drive Report display shows "Check Tire Pressures for Best Fuel Economy". You can switch the display to the Tire Pressures display by pushing the scroll dial on the steering wheel.

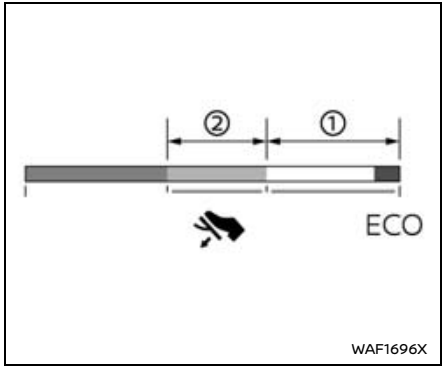

ECO Pedal Guide function (if so equipped)

The ECO Pedal Guide display can be selected in the vehicle information display in the ECO mode. (See "ECO Pedal Guide (if so equipped)" (P.138).) Use the ECO Pedal Guide function for improving fuel economy.

When the ECO Pedal Guide bar is in the range ①, it indicates that the vehicle is being driven within range of the super economy drive.

When the ECO Pedal Guide bar is in the range ②, it indicates that the vehicle is being driven within range of the economy drive.

If the ECO Pedal Guide bar is out of the range ① and ②, it indicates that the accelerator pedal is depressed over the range of economy drive.

The ECO Pedal Guide bar is not displayed when:

- The vehicle speed is less than approximately 2 MPH (4 km/h).
- The shift button is in the P (Park), N (Neutral) or R (Reverse) position.

SPORT MODE

The symbol of this mode is .

When this mode is selected, the 4WD "4H" and "4L" mode cannot be selected. See "NISSAN All-Mode 4WD® (if so equipped)" (P.407) for details of the 4WD system (if so equipped).

- Adjusts the engine and transmission points for a higher response.
- The setting of the steering system is adjusted to moderately increase steering wheel effort for a sporty feel.
- The setting of the suspension system (if so equipped) is optimized for sporty driving feel by providing better cornering performance.

NOTE:
In the SPORT mode, fuel economy may be reduced.

TOW MODE

Basic information

The symbol of this mode is .

The mode controls the shifting points to facilitate the acceleration and deceleration while towing.

NOTE:
The TOW mode should be used when pulling a heavy trailer or hauling a heavy load. Driving the vehicle in the TOW mode with no trailer/load or light trailer/light load will not cause any damage. However, fuel economy may be reduced, and the transmission/ engine driving characteristics may feel unusual.

TOW mode is automatically canceled when the ignition switch is placed in the OFF position.

Towing mode

When the TOW mode has been selected, the rear view of the Intelligent Around View® Monitor continues to be displayed if the transmission has shifted out from the R (Reverse) position under certain conditions.

See "Towing mode (if so equipped)" (P.249) for the details.

SNOW MODE

The symbol of this mode is .

This mode makes it easier to start and drive on snowy roads and frozen roads.

⚠ CAUTION

Never drive on dry, hard surface roads in the SNOW mode, as this will overload the powertrain and may cause a serious malfunction. Additionally, this will cause premature tire wear and reduced fuel economy.

When the SNOW mode is selected, small vibration in cornering may occur. This is not a malfunction.

SAND MODE (if so equipped)

⚠ WARNING

When this mode is selected, the VDC operation is reduced. The VDC system may not operate in the same circumstances when compared to operation in the STANDARD mode. To help prevent accidents drive carefully, avoid careless or dangerous driving techniques and be especially careful when driving and cornering on slippery surfaces.

⚠ CAUTION

Never drive on dry, hard surface roads in the SAND mode, as this will overload the powertrain and may cause a serious malfunction. Additionally, this will cause premature tire wear and reduced fuel economy.

The symbol of this mode is .

This mode makes it easier to drive on sandy roads or dunes.

When this mode is selected, the 4WD "AUTO" mode cannot be selected. See "NISSAN All-Mode 4WD® (if so equipped)" (P.407) for details of the 4WD system.

When this mode is selected, the vehicle height "AERO" and "ACCESS" will not be selected when the air suspension "AUTO" switch is pushed. See "Air suspension system (if so equipped)" (P.413) for details of the air suspension system (if so equipped).

When the SAND mode is selected, tight-corner braking phenomenon or vibration in cornering may occur. This is not a malfunction.

The setting of the suspension system (if so equipped) is optimized for sandy roads.

ROCK MODE (if so equipped)

⚠ WARNING

When this mode is selected, the VDC operation is reduced. The VDC system may not operate in the same circumstances when compared to operation in the STANDARD mode. To help prevent accidents drive carefully, avoid careless or dangerous driving techniques and be especially careful when driving and cornering on slippery surfaces.

⚠ CAUTION

Never drive on dry, hard surface roads in the ROCK mode, as this will overload the powertrain and may cause a serious malfunction. Additionally, this will cause premature tire wear and reduced fuel economy.

The symbol of this mode is .

This mode makes it easier to start and drive on deep gravel, moguls or rocky roads.

When this mode is selected, the 4WD “AUTO” mode cannot be selected. See "NISSAN All-Mode 4WD® (if so equipped)" (P.407) for details of the 4WD system.

When this mode is selected, the vehicle height "AERO" and "ACCESS" will not be

selected when the air suspension AUTO switch (if so equipped) is pushed. See "Air suspension system (if so equipped)" (P.413) for details of the air suspension system (if so equipped).
When the ROCK mode is selected, tight-corner braking phenomenon or vibration in cornering may occur. This is not a malfunction.
The setting of the suspension system (if so equipped) is optimized for deep gravel, moguls or rocky roads.

MUD/RUT MODE (if so equipped)

⚠ WARNING

When this mode is selected, the VDC operation is reduced. The VDC system may not operate in the same circumstances when compared to operation in the STANDARD mode. To help prevent accidents drive carefully, avoid careless or dangerous driving techniques and be especially careful when driving and cornering on slippery surfaces.

⚠ CAUTION

Never drive on dry, hard surface roads in the MUD/RUT mode, as this will overload the powertrain and may cause a serious malfunction. Additionally, this will cause premature tire wear and reduced fuel economy.

The symbol of this mode is .
This mode makes it easier to start and drive on muddy roads, muddy ruts and riverbeds.
When this mode is selected, the 4WD "AUTO" mode cannot be selected. See "NISSAN All-Mode 4WD® (if so equipped)" (P.407) for details of the 4WD system.
When this mode is selected, the vehicle height "AERO" and "ACCESS" will not be selected when the air suspension "AUTO" switch is pushed. See "Air suspension system (if so equipped)" (P.413) for details of the air suspension system (if so equipped).
When the MUD/RUT mode is selected, tight-corner braking phenomenon or vibration in cornering may occur. This is not a malfunction.
The setting of the suspension system (if so equipped) is optimized for muddy roads, muddy ruts and riverbeds.

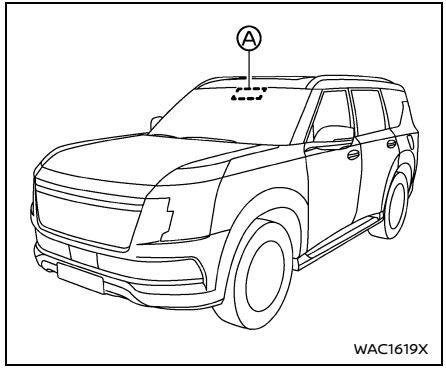

BASIC INFORMATION

The Traffic Sign Recognition (TSR) system provides the driver with information about the most recently detected speed limit. The system captures the road sign information with the multi-sensing front camera unit Ⓐ located on the windshield in front of the inside mirror and displays the detected signs in the vehicle information display. For vehicles equipped with the map locator system, the speed limit displayed is based on a combination of the map locator system data and live camera recognition. If the vehicle exceeds the speed limit, the system warns the driver by flashing the speed display icon. TSR information is shown in the vehicle information display and in the Head Up Display (HUD) (if so equipped). (See "Head

Up Display (HUD) (if so equipped)" (P.146).)

⚠ WARNING

The TSR system is only intended to be a support device to help provide the driver with information. It is not a replacement for the driver's attention to traffic conditions or responsibility to drive safely. It cannot prevent accidents due to carelessness. It is the driver's responsibility to stay alert and drive safely at all times.

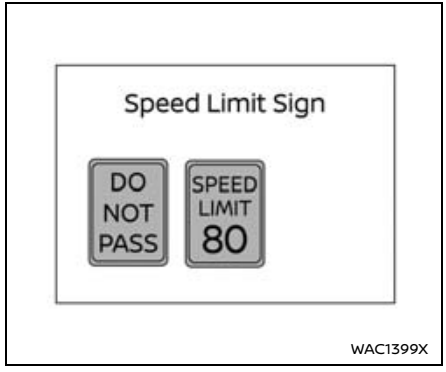

SYSTEM OPERATION

The TSR system displays the following types of road sign:

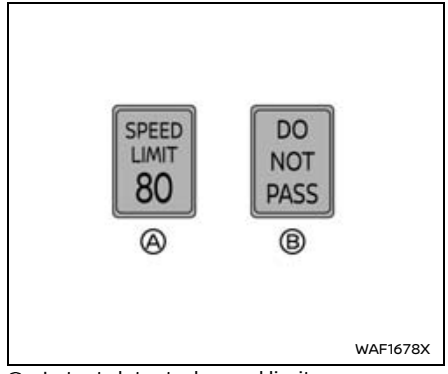

Ⓐ Latest detected speed limit
Ⓑ No passing zone

⚠ CAUTION

- **The TSR system is intended as an aid to careful driving. It is the driver's responsibility to stay alert, drive safely, and observe all road regulations that currently apply, including looking out for road signs.**
- **The TSR system may not function properly under all conditions. Below are some examples:**
  - **When the road sign is not clearly visible, for example, due to damage or weather conditions.**

- **– When rain, snow or dirt adheres to the windshield in front of the multi-sensing front camera unit.**
- **– When the headlights are not bright, for example, due to dirt on the lens or if the aiming is not adjusted properly.**
- **– When strong light enters the camera unit. (For example, the light directly shines on the front of the vehicle at sunrise or sunset.)**
- **– When a sudden change in brightness occurs. (For example, when the vehicle enters or exits a tunnel or under a bridge.)**
- **– In areas not covered by the map locator system.**
- **– If there are deviations in relation to the navigation, for example due to changes in the road routing.**
- **– When overtaking buses or trucks with speed stickers.**
- **– When the data from the map locator system is not up-to-date or is unavailable.**

- **The TSR system may display a traffic sign, though there is no traffic sign in front of the vehicle. It may display a different speed limit from that for a passenger vehicle. (The maximum speed limit sign may show a higher or lower number than the actual maximum speed, for example, when detecting a speed limit sign for truck, advisory sign, different speed limit sign between daytime and nighttime, or speed limit sign written in different unit near the border, etc.)**

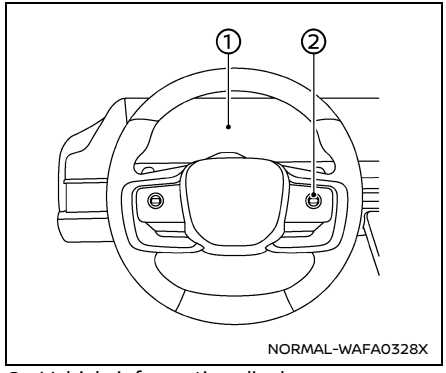

① Vehicle information display
② Steering-wheel-mounted controls (right side)

HOW TO ENABLE/DISABLE THE TSR SYSTEM

Perform the following steps to enable or disable the TSR system:

1. Push the ◀ ▶ button on the right side of the steering wheel ② until "Settings" appears in the vehicle information display and then push the scroll dial. Use the scroll dial to select "Driver Assistance". Then push the scroll dial.
2. Select "Traffic Sign Assist" and push the scroll dial. Then select "Speed Limit Sign" or "Speed Limit Warning" (if so equipped)

and push the scroll dial to turn the system on or off.

SYSTEM TEMPORARILY UNAVAILABLE

If the vehicle is parked in direct sunlight under high temperature conditions (over approximately 104°F (40°C)) and then started, the TSR system may be deactivated automatically. The "Unavailable Camera Temperature High" warning message will appear in the vehicle information display.

Action to take:

When the interior temperature is reduced, the TSR system will resume operating automatically.

SYSTEM MALFUNCTION

If the TSR system malfunctions it will be turned off automatically and the "Malfunction See Owner's Manual" warning message will appear in the vehicle information display.

Action to take:

If the warning message appears, pull off the road at a safe location and stop the vehicle. Turn the engine off and restart the engine. If the warning message continues to appear, have the system checked. It is recommended that you visit a NISSAN dealer for this service.

SYSTEM MAINTENANCE

The TSR system uses the same multi-sensing front camera unit that is used by the Lane Departure Warning (LDW) system, located in front of the inside mirror. For maintenance of the camera, see "System maintenance" (P.324).

LANE DEPARTURE WARNING (LDW)/INTELLIGENT LANE INTERVENTION (I-LI)

BASIC INFORMATION

⚠ WARNING

Failure to follow the warnings and instructions for proper use of the LDW and I-LI systems could result in serious injury or death.

- **The LDW and I-LI systems will not steer the vehicle or prevent loss of control. It is the driver's responsibility to stay alert, drive safely, keep the vehicle in the traveling lane, and be in control of the vehicle at all times.**
- **The LDW and I-LI systems are primarily intended for use on well-developed freeways or highways. The systems may not detect the lane markers in certain road, weather, or driving conditions.**

- Lane Departure Warning (LDW) system
  - warns the driver with an indicator in the vehicle information display and vibrations of the steering wheel that the vehicle is beginning to leave the driving lane.
- Intelligent Lane Intervention (I-LI) system
  - warns the driver with and indicator in the vehicle information display and vibrations of the steering wheel, and helps the driver to return the vehicle to the center of the traveling lane.

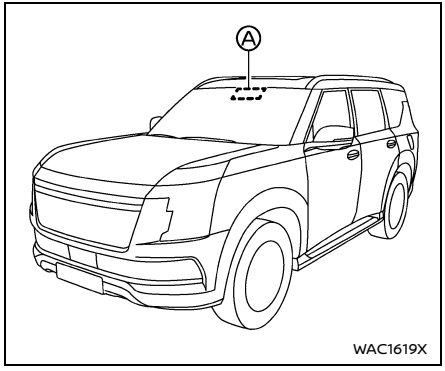

The LDW and I-LI systems use a camera Ⓐ installed behind the windshield to monitor the lane markers of your traveling lane.

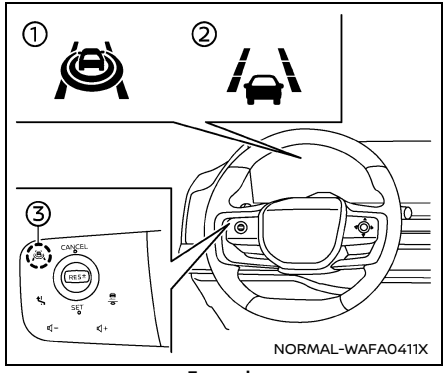

Example

① I-LI ON indicator (on the vehicle information display)
② LDW/I-LI indicator (on the vehicle information display)
③ ProPILOT Assist switch

LDW SYSTEM OPERATION

The LDW system provides a lane departure warning function when the vehicle is driven at the speeds of approximately 37 MPH (60 km/h) and above (varies depending on vehicle specification), and only when lane markings and road edges are clear. When the vehicle approaches either the left or the right side of the traveling lane, the steering wheel will vibrate and the LDW indicator on the vehicle information display will blink to alert the driver.

The warning function will stop when the vehicle returns inside of the lane markers.

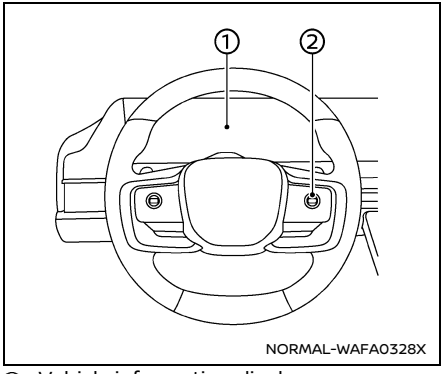

① Vehicle information display
② Steering-wheel-mounted controls (right side)

HOW TO ENABLE/DISABLE THE LDW SYSTEM

Basic information

Perform the following steps to enable or disable the LDW system.

1. Push the ◀ ▶ button on the right side of the steering wheel ② until "Settings" appears in the vehicle information display and then push the scroll dial. Use the scroll dial to select "Driver Assistance". Then push the scroll dial.
2. Select "Lane Assist" and push the scroll dial.
3. Select "Warning" and push the scroll dial.

NOTE:
If you disable the LDW system, the system will remain disabled the next time you start the engine.

I-LI SYSTEM OPERATION

The I-LI system must be turned on with the ProPILOT Assist switch, every time the ignition switch is placed in the ON position.

The I-LI system will operate when the vehicle is driven at the speeds of approximately 37 MPH (60 km/h) and above, and only when the lane markings and road edges are clearly visible on the road.

When the vehicle approaches either the left or the right side of the traveling lane, steering wheel will vibrate and the I-LI indicator (orange) on the vehicle information display will blink to alert the driver. Then, the I-LI system will help assist the driver to return the vehicle to the center of the traveling lane.

To turn on the I-LI system, push the ProPILOT Assist switch on the steering wheel after starting the engine. The I-LI ON indicator on the vehicle information display will illuminate. Push the ProPILOT Assist switch again to turn off the I-LI system. The I-LI ON indicator will turn off.

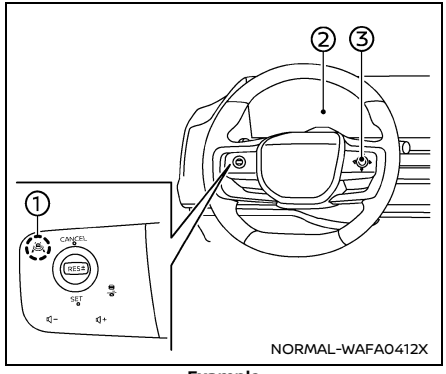

Example

① ProPILOT Assist switch
② Vehicle information display
③ Steering-wheel-mounted control (right side)

HOW TO ENABLE/DISABLE THE I-LI SYSTEM

Basic information

Perform the following steps to enable or disable the I-LI system.

1. Push the ◀ ▶ button on the right side of the steering wheel ③ until "Settings" appears in the vehicle information display and then push the scroll dial. Use the scroll dial to select "Driver Assistance." Then push the scroll dial.

2. Select "Lane Assist" and push the scroll dial.
3. Select "Intervention" and push the scroll dial.
4. Push the ProPILOT Assist switch to turn the system on or off.

NOTE:
- **Turning on the ProPILOT system will turn on the I-LI system and Blind Spot Intervention® system at the same time. If the I-LI system is disabled in the settings menu, the I-LI will automatically be turned on when the Steering Assist system is active. (See "ProPILOT Assist Systems" (P.349).)**
- **The system will retain current settings in the vehicle information display even if the engine is restarted.**

Setting lane sensitivity

You can set lane sensitivity using the "Settings" menu in the vehicle information display.

1. Push the ◀ ▶ button until "Settings" appears in the vehicle information display and then push the scroll dial. Use the scroll dial to select "Driver Assistance." Then push the scroll dial.
2. Select "Lane Assist" and push the scroll dial.
3. Select "Lane Sensitivity".
   - Strong
   - Normal
   - Mild

NOTE:
The sensitivity setting will be retained even if the engine is restarted. This setting is also applied to the Lane Departure Warning (LDW) system.

LDW/I-LI SYSTEM LIMITATIONS

⚠ WARNING

Listed below are the system limitations for the LDW/I-LI systems. Failure to follow the warnings and instructions for proper use of the LDW/I-LI systems could result in serious injury or death.

- **The I-LI system may activate if you change lanes without first activating your turn signal or, for example, if a construction zone directs traffic to cross an existing lane marker. If this occurs you may need to apply corrective steering to complete your lane change.**
- **Because the I-LI system may not activate under the road, weather, and lane marker conditions described in this section, it may not activate every time your vehicle begins to leave its lane and you will need to apply corrective steering.**
- **The systems will not operate below the activation speed or if they cannot detect lane markers.**
- **When the I-LI system is operating, avoid excessive or sudden steering maneuvers. Otherwise, you could lose control of the vehicle.**
- **Do not use the LDW/I-LI system under the following conditions as they may not function properly:**
  - **During bad weather (rain, fog, snow, etc.).**
  - **When driving on slippery roads, such as on ice or snow.**
  - **When driving on winding or uneven roads.**
  - **When there is a lane closure due to road repairs.**
  - **When driving in a makeshift or temporary lane.**
  - **When driving on roads where the lane width is too narrow.**
  - **When driving without normal tire conditions (for example, tire wear, low tire pressure, installation of other tire than NISSAN certified standard tire, installation of the spare tire, tire chains, non-standard wheels).**
  - **When the vehicle is equipped with non-original brake parts, steering parts or suspension parts.**
  - **When towing a trailer or other vehicle.**

- **On roads where there are multiple parallel lane markers; lane markers that are faded or not painted clearly; yellow painted lane markers; non-standard lane markers; or lane markers covered with water, dirt, snow, etc.**
- **On roads where the edge of the road is not clearly visible.**
- **On roads where discontinued lane markers are still detectable.**
- **On roads where there are sharp curves.**
- **On roads where there are sharply contrasting objects, such as shadows, snow, water, wheel ruts, seams or lines remaining after road repairs. (The I-LI system could detect these items as lane markers.)**
- **On roads where the traveling lane merges or separates.**
- **When the vehicle's traveling direction does not align with the lane marker.**
- **When traveling close to the vehicle in front of you, which obstructs the lane camera unit detection range.**
- **When rain, snow or dirt adheres to the windshield in front of the lane camera unit.**
- **When the headlights are not bright due to dirt on the lens or if the aiming is not adjusted properly.**
- **When strong light enters the lane camera unit. (For example, the light directly shines on the front of the vehicle at sunrise or sunset.)**
- **When a sudden change in brightness occurs. (For example, when the vehicle enters or exits a tunnel or under a bridge.)**

- **Steering wheel vibration may not be felt depending on the road surface conditions.**
- **While the vehicle height is changing by the air suspension system (if so equipped), or the air suspension system is malfunctioning, the I-LI system may not function.**

SYSTEM TEMPORARILY UNAVAILABLE

Condition A:

The warning and assist functions of the LDW/I-LI systems are not designed to work under the following conditions:

- When you operate the lane change signal and change the traveling lanes in the direction of the signal. (The systems will be deactivated for approximately 2 seconds after the lane change signal is turned off.)
- When the vehicle speed lowers to less than the activation speed.

Action to take:

After the above conditions have finished and the necessary operating conditions are satisfied, the warning and assist functions will resume.

Condition B:

If the vehicle is parked in direct sunlight under high temperature conditions (over approximately 104°F (40°C)) and then the LDW/I-LI systems are turned on, the systems may be deactivated automatically, a chime sounds and the following message will appear on the vehicle information display:

- "Unavailable Camera Temperature High"

Action to take:

When the interior temperature is reduced, the LDW system will resume operating automatically. For the I-LI system, turn off the system. Push the ProPILOT Assist switch again to turn the system back on.

Condition C:

The assist function of the I-LI system is not designed to work under the following conditions (warning is still functional):

- When the brake pedal is depressed or if the vehicle decelerates strongly.
- When the steering wheel is turned as far as necessary for the vehicle to change lanes.
- When the vehicle is accelerated during the I-LI system operation.
- When the Intelligent Cruise Control (ICC) approach warning occurs.

- When the hazard warning flashers are operated.
- When driving on a curve at high speed.

Action to take:

After the above conditions have finished and the necessary operating conditions are satisfied, the assist function of the I-LI system will resume.

Condition D:

If the following message appears in the vehicle information display, a chime will sound and the I-LI system will be turned off automatically.

- "Unavailable Slippery Road":
  - When the VDC (except Traction Control System (TCS) function) system or ABS operates.
- "Currently Unavailable due to Drive Mode or High Suspension Setting":
  - When the VDC system is turned off.
  - When the SNOW, SAND, ROCK or MUD/RUT mode is selected (if so equipped).
  - 4H or 4L (if so equipped) mode is selected.
  - Air suspension (if so equipped) is set to HIGH mode.
- "Driving Aids Limited Towing Assist Activated":
  - When the trailer BSW is activated.
  - When the TOW mode is selected (if so equipped).

Action to take:

When the above conditions no longer exist, turn off the I-LI system. Push the ProPILOT Assist switch again to turn the I-LI system back on.

SYSTEM MALFUNCTION

If the LDW/I-LI systems malfunction, they will cancel automatically. The LDW/I-LI indicator (orange) will illuminate, a chime will sound and the "Malfunction See Owner's Manual" warning message will appear in the vehicle information display.

Action to take:

If the indicator (orange) illuminates or the warning message appears, pull off the road to a safe location. Turn the engine off and restart the engine. If the indicator (orange) continues to illuminate or the warning message continues to appear, have the systems checked. It is recommended that you visit a NISSAN dealer for this service.

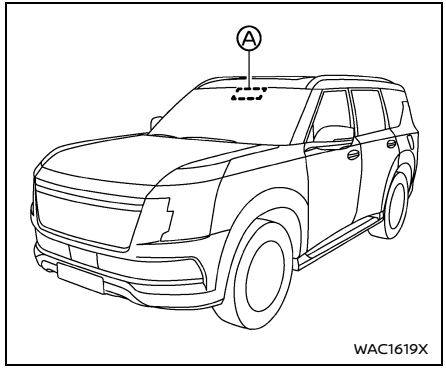

SYSTEM MAINTENANCE

The lane camera unit Ⓐ for the LDW/I-LI systems is located above the inside rearview mirror. To keep the proper operation of the systems and prevent a system malfunction, be sure to observe the following:

- Always keep the windshield clean.
- Do not attach a sticker (including transparent material) or install an accessory near the camera unit.
- Do not place reflective materials, such as white paper or a mirror, on the instrument panel. The reflection of sunlight may adversely affect the camera unit's capability of detecting the lane markers.
- Do not strike or damage the areas around the camera unit. Do not touch the camera lens or remove the screw

located on the camera unit. If the camera unit is damaged due to an accident, it is recommended that you visit a NISSAN dealer.

BASIC INFORMATION

⚠ WARNING

Failure to follow the warnings and instructions for proper use of the BSW system could result in serious injury or death.

- **The BSW system is not a replacement for proper driving procedure and is not designed to prevent contact with vehicles or objects. When changing lanes, always use the side and rear mirrors and turn and look in the direction your vehicle will move to ensure it is safe to change lanes. Never rely solely on the BSW system.**

The BSW system helps alert the driver of other vehicles in adjacent lanes when changing lanes.

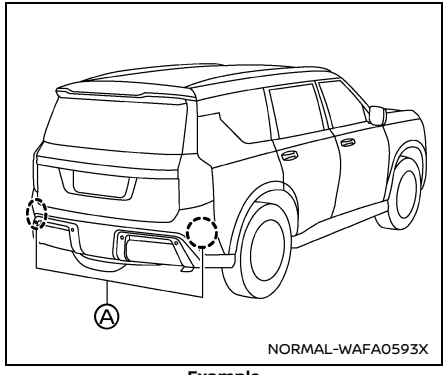

Example

The BSW system uses radar sensors Ⓐ installed near the rear bumper to detect other vehicles in an adjacent lane.

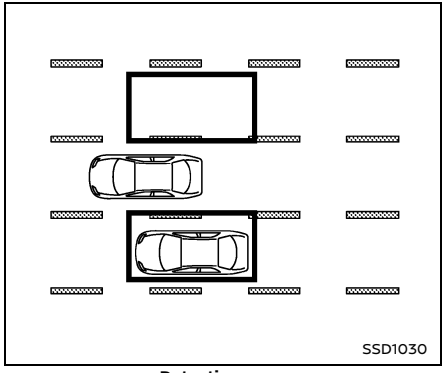

Detection zone

The radar sensors can detect vehicles on either side of your vehicle within the detection zone shown as illustrated. This detection zone starts from the outside mirror of your vehicle and extends approximately 10 ft (3.0 m) behind the rear bumper, and approximately 10 ft (3.0 m) sideways.

The detection zone extends if the vehicle in an adjacent lane is approaching from behind at high speed.

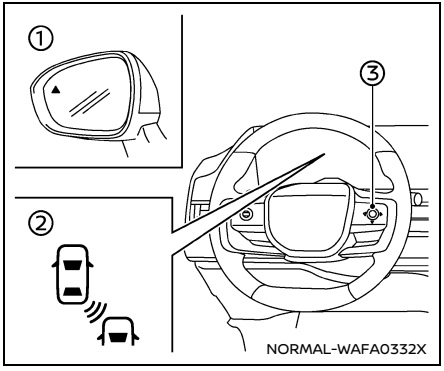

① Side indicator light
② BSW indicator (on the vehicle information display)
③ Steering-wheel-mounted controls (right side)

BSW SYSTEM OPERATION

The BSW system operates above approximately 20 MPH (32 km/h).

If the radar sensors detect a vehicle in the detection zone, the side indicator light illuminates.

If the turn signal is then activated, the system chimes (twice) and the side indicator light and BSW indicator flash. The side indicator light and BSW indicator continue to flash until the detected vehicle leaves the detection zone.

The side indicator light illuminates for a few seconds when the ignition switch is placed in the ON position.

The brightness of the side indicator light is adjusted automatically depending on the brightness of the ambient light.

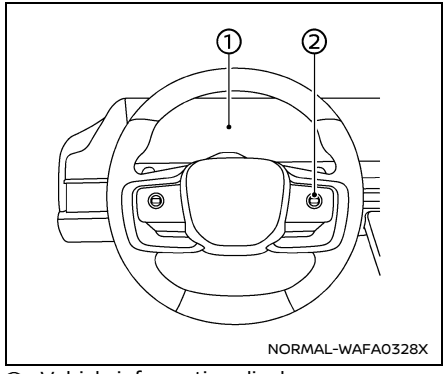

① Vehicle information display
② Steering-wheel-mounted controls (right side)

HOW TO ENABLE/DISABLE THE BSW SYSTEM

Perform the following steps to enable or disable the BSW system.

1. Push the ◀ ▶ button on the right side of the steering wheel ② until "Settings" appears in the vehicle information display and then push the scroll dial. Use the scroll dial to select "Driver Assistance". Then push the scroll dial.
2. Select "Blind Spot Assist" and push the scroll dial.
3. Select "Warning" and push the scroll dial.
4. To enable/disable the trailer BSW function, select "Trailer Blind Spot" and push the scroll dial.
   See "Trailer BSW function operation" (P.330) for more details of the trailer BSW function.

NOTE:
The system will retain current settings in the vehicle information display even if the engine is restarted.

BSW SYSTEM LIMITATIONS

⚠ WARNING

Listed below are the system limitations for the BSW system. Failure to operate the vehicle in accordance with these system limitations could result in serious injury or death.

- **The BSW system cannot detect all vehicles under all conditions.**
- **The radar sensors may not be able to detect and activate BSW when certain objects are present such as:**
  - **Pedestrians, bicycles, animals.**
  - **Vehicles such as motorcycles, low height vehicles, or high ground clearance vehicles.**
  - **Oncoming vehicles.**
  - **Vehicles remaining in the detection zone when you accelerate from a stop.**
  - **A vehicle merging into an adjacent lane at a speed approximately the same as your vehicle.**
  - **A vehicle approaching rapidly from behind.**
  - **A vehicle which your vehicle overtakes rapidly.**
  - **A vehicle that passes through the detection zone quickly.**
  - **When overtaking several vehicles in a row, the vehicles after the first vehicle may not be detected if they are traveling close together.**
- **The radar sensor's detection zone is designed based on a standard lane width. When driving in a wider lane, the radar sensors may not detect vehicles in an adjacent lane. When driving in a narrow lane, the radar sensors may detect vehicles driving two lanes away.**
- **The radar sensors are designed to ignore most stationary objects, however objects such as guardrails, walls, foliage and parked vehicles may occasionally be detected. This is a normal operation condition.**
- **The following conditions may reduce the ability of the radar to detect other vehicles:**
  - **Severe weather**
  - **Road spray**

- **– Ice/frost/snow/dirt build-up on the vehicle**
- **– Interference by other radar sources (nearby broadcasting stations, radar-equipped vehicles, etc.)**

- **Do not attach stickers (including transparent material), install accessories or apply additional paint near the radar sensors. These conditions may reduce the ability of the radar to detect other vehicles.**
- **Excessive noise (for example, audio system volume, open vehicle window) will interfere with the chime sound, and it may not be heard.**

BSW DRIVING SITUATIONS

Basic information

Indicator on

Indicator off

Indicator flashing

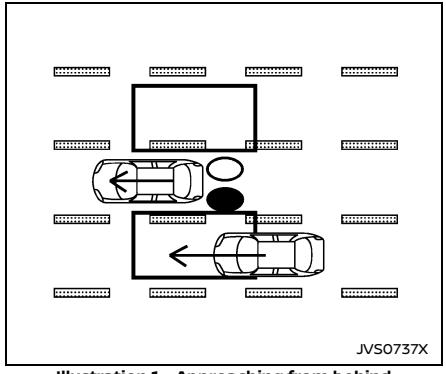

Illustration 1 – Approaching from behind

Another vehicle approaching from behind

Illustration 1: The side indicator light illuminates if a vehicle enters the detection zone from behind in an adjacent lane.

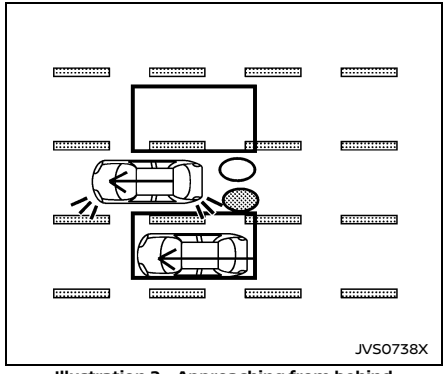

Illustration 2 – Approaching from behind

Illustration 2: If the driver activates the turn signal while another vehicle is in the detection zone, then the system chimes (twice) and the side indicator light and BSW indicator flash.

NOTE:

- **The radar sensors may not detect vehicles which are approaching rapidly from behind.**
- **If the driver activates the turn signal before a vehicle enters the detection zone, the side indicator light and BSW indicator will flash but no chime will sound when the other vehicle is detected.**

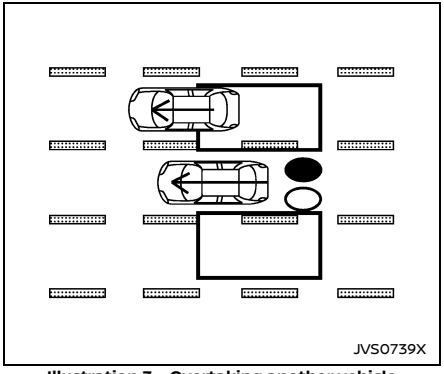

Illustration 3 – Overtaking another vehicle

Overtaking another vehicle

Illustration 3: The side indicator light illuminates if you overtake a vehicle and that vehicle stays in the detection zone for approximately 2 seconds.

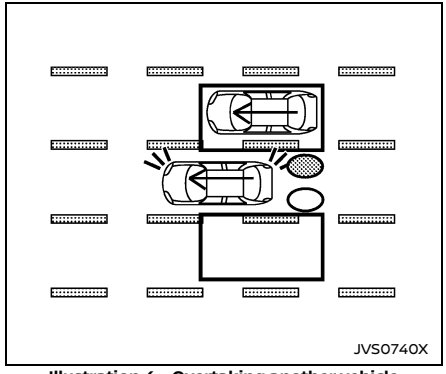

Illustration 4 – Overtaking another vehicle

Illustration 4: If the driver activates the turn signal while another vehicle is in the detection zone, then the system chimes (twice) and the side indicator light and BSW indicator flash.

NOTE:

- **When overtaking several vehicles in a row, the vehicles after the first vehicle may not be detected if they are traveling close together.**
- **The radar sensors may not detect slower moving vehicles if they are passed quickly.**
- **If the driver activates the turn signal before a vehicle enters the detection zone, the side indicator light and BSW indicator will flash but no chime will sound when the other vehicle is detected.**

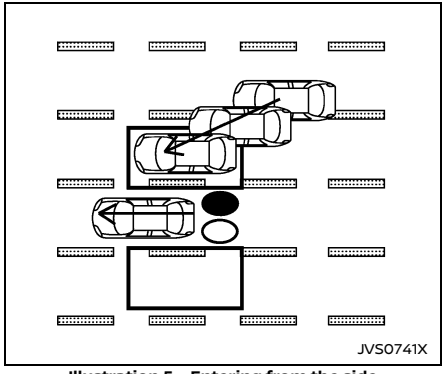

Illustration 5 – Entering from the side

Entering from the side

Illustration 5: The side indicator light illuminates if a vehicle enters the detection zone from either side.

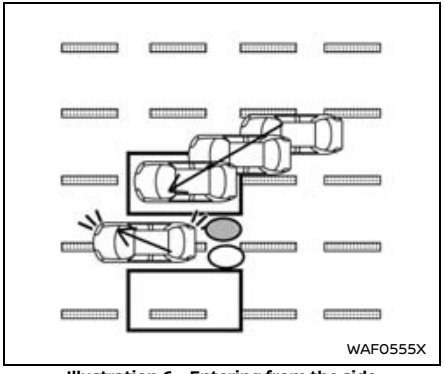

Illustration 6 – Entering from the side

Illustration 6: If the driver activates the turn signal while another vehicle is in the detection zone, then the system chimes (twice) and the side indicator light and BSW indicator flash.

NOTE:

- **The radar sensors may not detect a vehicle which is traveling at about the same speed as your vehicle when it enters the detection zone.**
- **If the driver activates the turn signal before a vehicle enters the detection zone, the side indicator light and BSW indicator will flash but no chime will sound when the other vehicle is detected.**

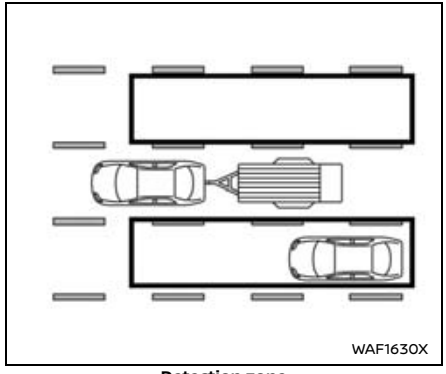

Detection zone

TRAILER BSW FUNCTION OPERATION

Basic information

The trailer BSW function expands the detection zone to include the length of the trailer. The detection zone starts from the outside mirror of your vehicle and extends to the rear end of the trailer, and approximately 10 ft (3.0 m) sideways.

Setting the trailer length

Before starting the trailer BSW function, the trailer length must be set. The trailer length can be set in the vehicle information display. To set the trailer length, see "Towing

Settings" (P.117).

WARNING

The length of the trailer will not be detected automatically. You have to register the length of your trailer manually and precisely.

If the length of the trailer are not registered correctly, the BSW will not be able to operate correctly.

NOTE:

- **When the trailer BSW function is enabled, the Intelligent Lane Intervention (I-LI) system, the Intelligent Blind Spot Intervention (I-BSI), the Rear Cross Traffic Alert (RCTA), the Rear Automatic Braking (RAB) and the Steering Assist function (ProPILOT Assist) are automatically disabled.**
- **The radar sensors may not detect a vehicle which is traveling at about the same speed as your vehicle when it enters the detection zone.**
- **The BSW may issue false alerts under the following situations:**
  - **When your vehicle with a trailer is overtaking another vehicle, or an another vehicle is overtaking your vehicle with a trailer.**
  - **When your vehicle with a trailer is driving on a curved road or turning at an intersection.**

Trailer BSW system limitations

WARNING

Listed below are the system limitations for the trailer BSW system. Failure to operate the vehicle in accordance with these system limitations could result in serious injury or death.

- **The trailer BSW system may not function correctly under the following situations.**
  - **During bad weather. (For example: rain, fog, snow, etc.)**
  - **The trailer connection is not good.**
  - **In the case of several vehicles approaching in a row with a small gap.**
  - **If the distance between your vehicle and the vehicle following is short.**
  - **Immediately after the BSW system turns on.**
- **False alarms may be issued if there is heavy traffic.**
- **There may be differences in functionality depending on the type of trailer.**

SYSTEM TEMPORARILY UNAVAILABLE

When radar blockage is detected, the BSW system will be turned off automatically and the "Unavailable Side Radar Obstruction" warning message will appear in the vehicle information display.

The system is not available until the conditions no longer exist.

The radar sensors may be blocked by temporary ambient conditions such as snow, splashing water, mist or fog. The blocked condition may also be caused by ice, frost, snow or dirt obstructing the radar sensors.

NOTE:

If the BSW system stops working, the Intelligent Blind Spot Intervention (I-BSI) and the Rear Cross Traffic Alert (RCTA) systems will also stop working.

Action to take:

When the above conditions no longer exist, the system will resume automatically.

SYSTEM MALFUNCTION

When the BSW system malfunctions, it will be turned off automatically and the "Malfunction See Owner's Manual" warning message will appear in the vehicle information display.

NOTE:

If the BSW system stops working, the Intelligent Blind Spot Intervention (I-BSI) and Rear Cross Traffic Alert (RCTA) systems will also stop working.

Action to take:

Stop the vehicle in a safe location, turn the engine off and restart the engine. If the message continues to appear, have the BSW sys-

tem checked. It is recommended that you visit a NISSAN dealer for this service.

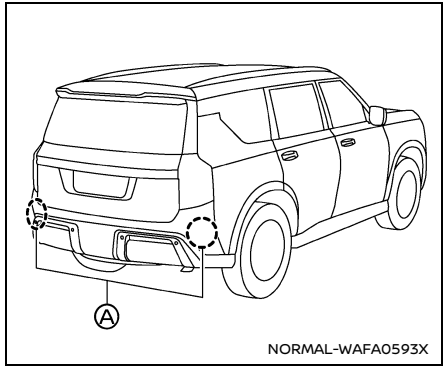

Example

SYSTEM MAINTENANCE

Basic information

The two radar sensors Ⓐ for the BSW system are located near the rear bumper. Always keep the area near the radar sensors clean.

The radar sensors may be blocked by temporary ambient conditions such as snow, splashing water, mist or fog.

The blocked condition may also be caused by ice, frost, snow or dirt obstructing the radar sensors.

Check for and remove objects obstructing the area around the radar sensors.

Do not attach stickers (including transparent material), install accessories or apply additional paint near the radar sensors.

Do not attach metallic objects near the sensor area (brush guard, etc.).

Do not strike or damage the area around the radar sensors.

See a NISSAN dealer or other authorized repair shop if the area around the radar sensors is damaged due to a collision.

Precautions on repairing the bumper

When repairing the bumper, take caution because the radar sensors are installed on the bumper.

The radar sensor detects objects by emitting a radar signal and then measuring its reflection.

⚠ WARNING

If an improper repair is performed on the bumper (for example, application of putty made from different materials, repaint, etc.) the radar signal could be weakened or prevented from functioning properly. This may cause the radar sensor not to detect objects correctly. Improper repair may result in serious personal injury. If it is necessary to repair the bumper, it is recommended you visit a NISSAN dealer for this service.

Radio frequency statement

For USA

This device complies with Part 15 of the FCC Rules. Operation is subject to the following two conditions: (1) this device may not cause harmful interference, and (2) this device must accept any interference received, including interference that may cause undesired operation.

CAUTION TO USERS

Changes or modifications not expressly approved by the party responsible for compliance could void the user`s authority to operate the equipment.

For Canada

This device contains license-exempt transmitter(s)/receiver(s) that comply with Innovation, Science and Economic Development Canada's license-exempt RSS(s). Operation is subject to the following two conditions: (1) This device may not cause interference. (2) This device must accept any interference, including interference that may cause undesired operation of the device.

L'émetteur/récepteur exempt de licence contenu dans le présent appareil est conforme aux CNR d'Innovation, Sciences et Développement économique Canada applicables aux appareils radio exempts de licence. L'exploitation est autorisée aux deux conditions suivantes : 1) L'appareil ne doit pas produire de brouillage; 2) L'appareil doit accepter tout brouillage radioélectrique subi, même si le brouillage est susceptible d'en compromettre le fonctionnement.

BASIC INFORMATION

⚠ WARNING

Failure to follow the warnings and instructions for proper use of the I-BSI system could result in serious injury or death.

- **The I-BSI system is not a replacement for proper driving procedures and is not designed to prevent contact with vehicles or objects. When changing lanes, always use the side and rear mirrors and turn and look in the direction your vehicle will move to ensure it is safe to change lanes. Never rely solely on the I-BSI system.**
- **There is a limitation to the detection capability of the radar. Not every moving object or vehicle will be detected. Using the I-BSI system under some road, ground, lane marker, traffic or weather conditions could lead to improper system operation. Always rely on your own operation to avoid accidents.**

The I-BSI system helps alert the driver of other vehicles in adjacent lanes when changing lanes, and helps assist the driver to return the vehicle to the center of the traveling lane.

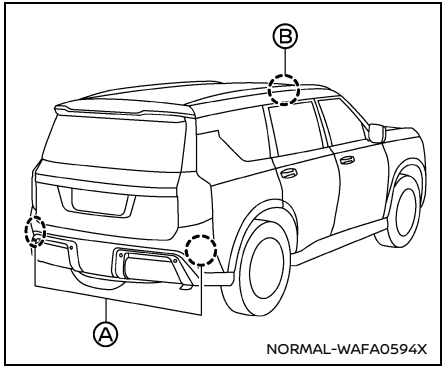

Example

The I-BSI system uses radar sensors Ⓐ installed near the rear bumper to detect other vehicles in an adjacent lane. In addition to the radar sensors, the I-BSI system uses a camera Ⓑ installed behind the windshield to monitor the lane markers of your traveling lane.

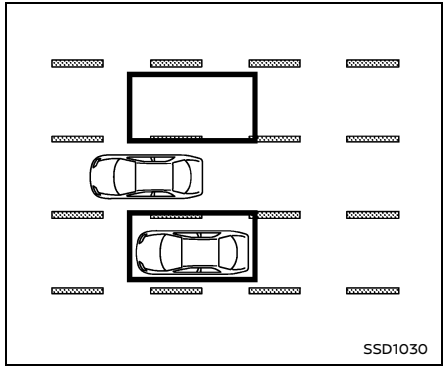

Detection zone

The radar sensors can detect vehicles on either side of your vehicle within the detection zone shown as illustrated.

This detection zone starts from the outside mirror of your vehicle and extends approximately 10 ft (3.0 m) behind the rear bumper, and approximately 10 ft (3.0 m) sideways.

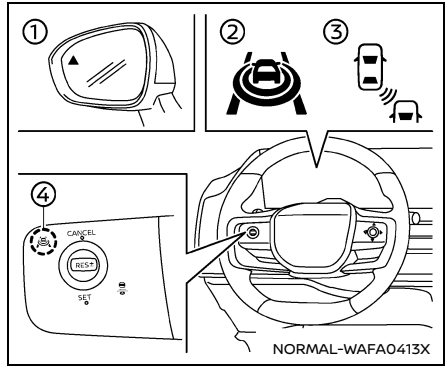

Example

① Side indicator light
② I-BSI ON indicator (on the vehicle information display)
③ I-BSI indicator (on the vehicle information display)
④ ProPILOT Assist switch (The design varies depending on the models.)

I-BSI SYSTEM OPERATION

The I-BSI system operates above approximately 37 MPH (60 km/h).

If the radar sensors detect a vehicle in the detection zone, the side indicator light illuminates.

If the turn signal is then activated, the system chimes (twice) and the side indicator light and I-BSI indicator flash. The side indicator light and I-BSI indicator continue to

flash until the detected vehicle leaves the detection zone.

If the I-BSI system is ON and your vehicle approaches a lane marker while another vehicle is in the detection zone, the system chimes (three times) and the side indicator light and I-BSI indicator flash. The I-BSI system activates to help return the vehicle back to the center of the driving lane. The I-BSI system operates regardless of turn signal usage.

To turn on the I-BSI system, push the ProPILOT Assist switch on the steering wheel after starting the engine. The I-BSI ON indicator on the vehicle information display will illuminate. Push the ProPILOT Assist switch again to turn off the I-BSI system.

NOTE:

- **I-BSI warning and system application will only be activated if the side indicator light is already illuminated when your vehicle approaches a lane marker. If another vehicle comes into the detection zone after your vehicle has crossed a lane marker, no I-BSI warning or system application will be activated. (For additional information, see "I-BSI driving situations" (P.337).)**
- **The I-BSI system is typically activated earlier than the Intelligent Lane Intervention (I-LI) system when your vehicle is approaching a lane marker.**

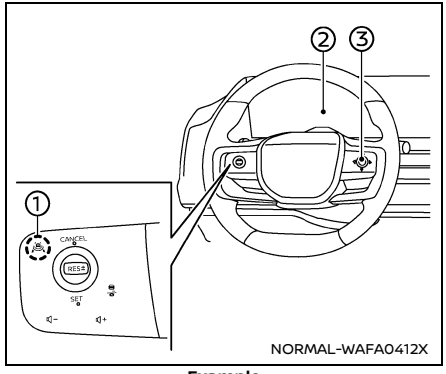

Example

① ProPILOT Assist switch (The design varies depending on the models.)
② Vehicle information display
③ Steering-wheel-mounted control (right side)

HOW TO ENABLE/DISABLE THE I-BSI SYSTEM

1. Push the ◀ ▶ button on the right side of the steering wheel ③ until "Settings" appears in the vehicle information display and then push the scroll dial. Use the scroll dial to select "Driver Assistance." Then push the scroll dial.
2. Select "Blind Spot Assist" and push the scroll dial.
3. Select "Intervention" and push the scroll dial.
4. Push the ProPILOT Assist switch to turn the system on or off.

NOTE:

- **Turning on the ProPILOT Assist system will turn on the I-BSI and I-LI systems at the same time. For additional information, see "Lane Departure Warning (LDW)/Intelligent Lane Intervention (I-LI)" (P.319).**
- **The system will retain current settings in the vehicle information display even if the engine is restarted.**

I-BSI SYSTEM LIMITATIONS

⚠ WARNING

Listed below are the system limitations for the I-BSI system. Failure to operate the vehicle in accordance with these system limitations could result in serious injury or death.

- **The I-BSI system cannot detect all vehicles under all conditions.**
- **The radar sensors may not be able to detect and activate I-BSI when certain objects are present such as:**
  - **Pedestrians, bicycles, animals.**
  - **Vehicles such as motorcycles, low height vehicles, or high ground clearance vehicles.**

- Vehicles remaining in the detection zone when you accelerate from a stop.
- Oncoming vehicles.
- A vehicle merging into an adjacent lane at a speed approximately the same as your vehicle.
- A vehicle approaching rapidly from behind.
- A vehicle which your vehicle overtakes rapidly.
- A vehicle that passes through the detection zone quickly.

- The radar sensor's detection zone is designed based on a standard lane width. When driving in a wider lane, the radar sensors may not detect vehicles in an adjacent lane. When driving in a narrow lane, the radar sensors may detect vehicles driving two lanes away.
- The radar sensors are designed to ignore most stationary objects, however objects such as guardrails, walls, foliage and parked vehicles may occasionally be detected. This is a normal operation condition.
- The following conditions may reduce the ability of the radar to detect other vehicles:
  - Severe weather
  - Road spray
  - Ice/frost/snow/dirt build-up on the vehicle
  - Interference by other radar sources (nearby broadcasting stations, radar-equipped vehicles, etc.)
- Do not attach stickers (including transparent material), install accessories or apply additional paint near the radar sensors. These conditions may reduce the ability of the radar to detect other vehicles.
- The camera may not detect lane markers in the following situations and the I-BSI system may not operate properly.
  - On roads where there are multiple parallel lane markers; lane markers that are faded or not painted clearly; yellow painted lane markers; nonstandard lane markers; lane markers covered with water, dirt, snow, etc.
  - On roads where discontinued lane markers are still detectable.
  - On roads where there are sharp curves.
  - On roads where there are sharply contrasting objects, such as shadows, snow, water, wheel ruts, seams or lines remaining after road repairs.
  - On roads where the traveling lane merges or separates.
  - When the vehicle's traveling direction does not align with the lane markers.
  - When traveling close to the vehicle in front of you, which obstructs the lane camera unit detection range.
  - When rain, snow or dirt adheres to the windshield in front of a lane camera unit.
  - When the headlights are not bright due to dirt on the lens or if aiming is not adjusted properly.
  - When strong light enters a lane camera unit. (For example: light directly shines on the front of the vehicle at sunrise or sunset.)
  - When a sudden change in brightness occurs. (For example: when the vehicle enters or exits a tunnel or under a bridge.)
- Do not use the I-BSI system under the following conditions because the system may not function properly.
  - During bad weather. (For example: rain, fog, snow, etc.)
  - When driving on slippery roads, such as on ice or snow, etc.
  - When driving on winding or uneven roads.
  - When there is a lane closure due to road repairs.

- **When driving in a makeshift or temporary lane.**
- **When driving on roads where the lane width is too narrow.**
- **When driving with a tire that is not within normal tire conditions (for example, tire wear, low tire pressure, installation of tire chains or a spare tire, or non-standard wheels).**
- **When the vehicle is equipped with non-original steering parts or suspension parts.**
- **When towing a trailer or other vehicle.**

- **Excessive noise (for example, audio system volume, open vehicle window) will interfere with the chime sound, and it may not be heard.**
- **While the vehicle height is changing by the air suspension system (if so equipped), or the air suspension system is malfunctioning, the I-BSI system may not function.**

I-BSI DRIVING SITUATIONS

Basic information

Indicator on

Indicator off

Indicator flashing

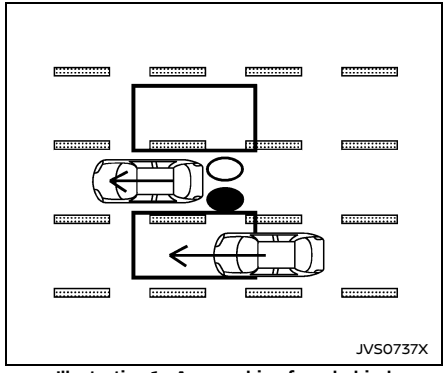

Illustration 1 – Approaching from behind

Another vehicle approaching from behind

Illustration 1: The side indicator light illuminates if a vehicle enters the detection zone from behind in an adjacent lane.

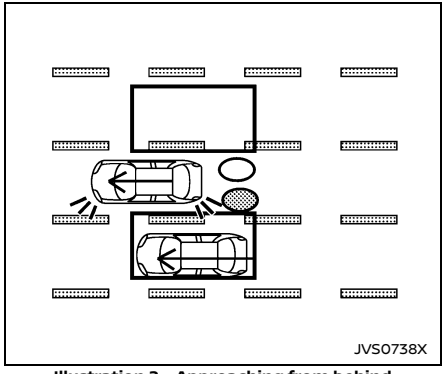

Illustration 2 – Approaching from behind

Illustration 2: If the driver activates the turn signal then the system chimes a sound (twice) and the side indicator light and I-BSI indicator flash.

NOTE:
If the driver activates the turn signal before a vehicle enters the detection zone, the side indicator light and I-BSI indicator will flash but no chime will sound when the other vehicle is detected.

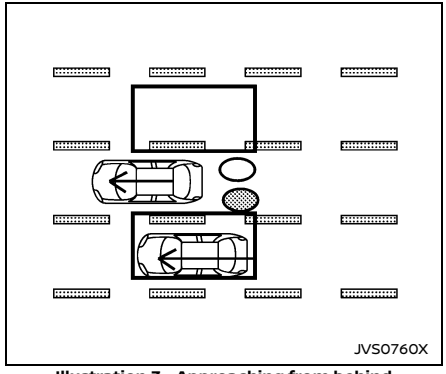

Illustration 3 – Approaching from behind

Illustration 3: If the I-BSI system is on and your vehicle approaches a lane marker while another vehicle is in the detection zone, the system chimes (three times) and the side indicator light and I-BSI indicator flash. The I-BSI system activates to help return the vehicle back to the center of the driving lane.

NOTE:
- **The radar sensors may not detect vehicles which are approaching rapidly from behind.**

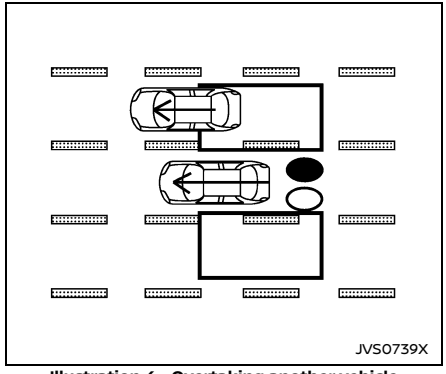

Illustration 4 – Overtaking another vehicle

Overtaking another vehicle

Illustration 4: The side indicator light illuminates if you overtake a vehicle and that vehicle stays in the detection zone for approximately 3 seconds.

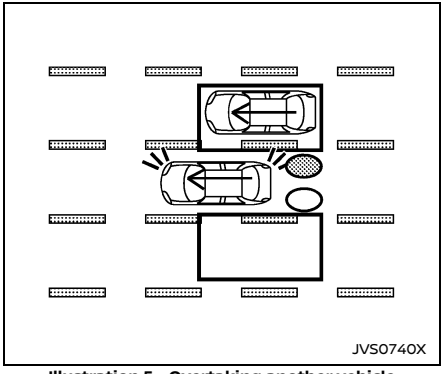

Illustration 5 - Overtaking another vehicle

Illustration 5: If the driver activates the turn signal while another vehicle is in the detection zone, then the system chimes (twice) and the side indicator light and I-BSI indicator flash.

NOTE:
If the driver activates the turn signal before a vehicle enters the detection zone, the side indicator light and I-BSI indicator will flash but no chime will sound when the other vehicle is detected.

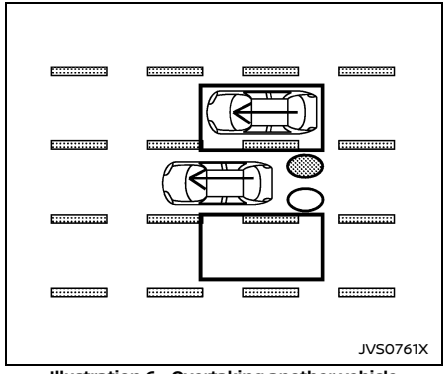

Illustration 6 - Overtaking another vehicle

Illustration 6: If the I-BSI system is on and your vehicle approaches a lane marker while another vehicle is in the detection zone, the system chimes (three times) and the side indicator light and I-BSI indicator flash. The Intelligent Blind Spot Intervention (I-BSI) system activates to help return the vehicle back to the center of the driving lane.

NOTE:
- **When overtaking several vehicles in a row, the vehicles after the first vehicle may not be detected if they are traveling close together.**
- **The radar sensors may not detect slower moving vehicles if they are passed quickly.**

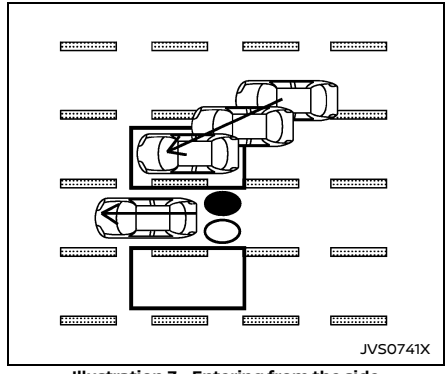

Illustration 7 - Entering from the side

Entering from the side

Illustration 7: The side indicator light illuminates if a vehicle enters the detection zone from either side.

NOTE:
The radar sensors may not detect a vehicle which is traveling at about the same speed as your vehicle when it enters the detection zone.

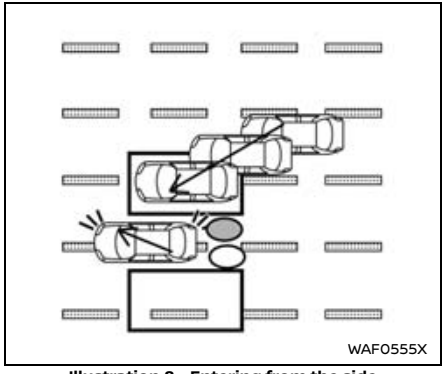

Illustration 8 - Entering from the side

Illustration 8: If the driver activates the turn signal while another vehicle is in the detection zone, then the side indicator light and I-BSI indicator flash and a chime will sound twice.

NOTE:

- **If the driver activates the turn signal before a vehicle enters the detection zone, the side indicator light and I-BSI indicator will flash but no chime will sound when another vehicle is detected.**

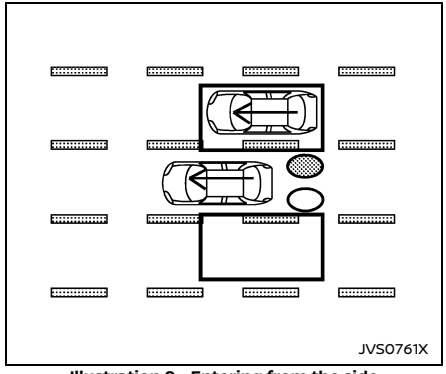

Illustration 9 - Entering from the side

Illustration 9: If the I-BSI system is on and your vehicle approaches the lane marker while another vehicle is in the detection zone, the system chimes (three times) and the side indicator light and I-BSI indicator flash. The I-BSI system activates to help return the vehicle back to the center of the driving lane.

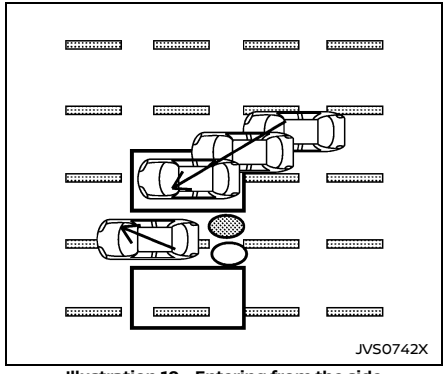

Illustration 10 - Entering from the side

Illustration 10: The I-BSI system will not operate if your vehicle is on a lane marker when another vehicle enters the detection zone. In this case only the BSW system operates.

NOTE:

- **The radar sensors may not detect a vehicle which is traveling at about the same speed as your vehicle when it enters the detection zone.**
- **Intelligent Blind Spot Intervention (I-BSI) will not operate or will stop operating and only a warning chime will sound under the following conditions.**
  - **When the brake pedal is depressed.**
  - **When the vehicle is accelerated during I-BSI system operation**
  - **When steering quickly**

- **When the ICC, I-FCW or AEB warnings sound.**
- **When the hazard warning flashers are operated.**
- **When driving on a curve at a high speed.**

SYSTEM TEMPORARILY UNAVAILABLE

When any of the following messages appear on the vehicle information display, a chime will sound and the I-BSI system will be turned off automatically.

- "Unavailable Slippery Road":
  When the VDC system (except traction control system function) or ABS operates.
- "Currently Unavailable due to Drive Mode or High Suspension Setting":
  - When the VDC system is turned off.
  - When the SNOW, SAND, ROCK or MUD/RUT mode is selected (if so equipped).
  - 4H or 4L (if so equipped) mode is selected.
  - Air suspension (if so equipped) is set to HIGH mode.
- "Driving Aids Limited Towing Assist Activated":
  - When the trailer BSW is activated.
  - When the TOW mode is selected (if so equipped).
- "Unavailable Camera Temperature High":
  If the vehicle is parked in direct sunlight under high temperature conditions (over approximately 104°F (40°C)).
- "Unavailable Side Radar Obstruction":
  When side radar blockage is detected.

Turn off the I-BSI system and turn it on again when the above conditions no longer exist.

SYSTEM MALFUNCTION

When the I-BSI system malfunctions, it will be turned off automatically, the I-BSI indicator illuminates and a chime will sound, and the "Malfunction See Owner's Manual" warning message will appear in the vehicle information display.

Action to take:

Stop the vehicle in a safe location and push the park button to engage the P (Park) position. Turn the engine off and restart the engine. If the warning message continues to appear, It is recommended you visit a NISSAN dealer for this service.

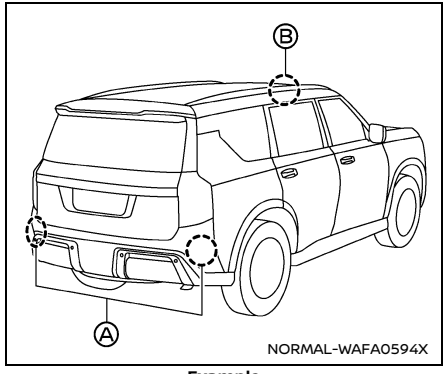

Example

SYSTEM MAINTENANCE

Basic information

The two radar sensors Ⓐ for the I-BSI system are located near the rear bumper. Always keep the area near the radar sensors clean.

The radar sensors may be blocked by temporary ambient conditions such as snow, splashing water, mist or fog.

The blocked condition may also be caused by ice, frost, snow or dirt obstructing the radar sensors.

Check for and remove objects obstructing the area around the radar sensors.

Do not attach stickers (including transparent material), install accessories or apply

additional paint near the radar sensors.
Do not attach metallic objects near the sensor area (brush guard, etc.).
Do not strike or damage the area around the radar sensors.
It is recommended you visit a NISSAN dealer if the area around the radar sensors is damaged due to a collision.
The lane camera unit Ⓑ for I-BSI system is located above the inside mirror. To keep the proper operation of I-BSI and prevent a system malfunction, be sure to observe the following:

- Always keep the windshield clean.
- Do not attach a sticker (including transparent material) or install an accessory near the camera unit.
- Do not place reflective materials, such as white paper or a mirror, on the instrument panel. The reflection of sunlight may adversely affect the camera unit's capability of detecting the lane markers.
- Do not strike or damage the areas around the camera unit. Do not touch the camera lens or remove the screw located on the camera unit. It is recommended you contact a NISSAN dealer if the camera unit is damaged due to an accident.

Precautions on repairing the bumper

When repairing the bumper, take caution because the radar sensors are installed on the bumper.
The radar sensor detects objects by emitting a radar signal and then measuring its reflection.

⚠ WARNING

If an improper repair is performed on the bumper (for example, application of putty made from different materials, repaint, etc.) the radar signal could be weakened or prevented from functioning properly. This may cause the radar sensor not to detect objects correctly. Improper repair may result in serious personal injury. If it is necessary to repair the bumper, it is recommended you visit a NISSAN dealer for this service.

Radio frequency statement

For USA

This device complies with Part 15 of the FCC Rules. Operation is subject to the following two conditions: (1) this device may not cause harmful interference, and (2) this device must accept any interference received, including interference that may cause undesired operation.

CAUTION TO USERS

Changes or modifications not expressly approved by the party responsible for compliance could void the user`s authority to operate the equipment.

For Canada

This device contains license-exempt transmitter(s)/receiver(s) that comply with Innovation, Science and Economic Development Canada's license-exempt RSS(s). Operation is subject to the following two conditions: (1) This device may not cause interference. (2) This device must accept any interference, including interference that may cause undesired operation of the device.

L'émetteur/récepteur exempt de licence contenu dans le présent appareil est conforme aux CNR d'Innovation, Sciences et Développement économique Canada applicables aux appareils radio exempts de licence. L'exploitation est autorisée aux deux conditions suivantes : 1) L'appareil ne doit pas produire de brouillage; 2) L'appareil doit accepter tout brouillage radioélectrique subi, même si le brouillage est susceptible d'en compromettre le fonctionnement.

REAR CROSS TRAFFIC ALERT (RCTA)

BASIC INFORMATION

⚠ WARNING

Failure to follow the warnings and instructions for proper use of the RCTA system could result in serious injury or death.

- **The RCTA system is not a replacement for proper driving procedures and is not designed to prevent contact with vehicles or objects. When backing out of a parking space, always use the side and rear mirrors and turn and look in the direction your vehicle will move. Never rely solely on the RCTA system.**

The RCTA system will assist you when backing out from a parking space. When the vehicle is in reverse, the system is designed to detect other vehicles approaching from the right or left of the vehicle. If the system detects cross traffic, it will alert you.

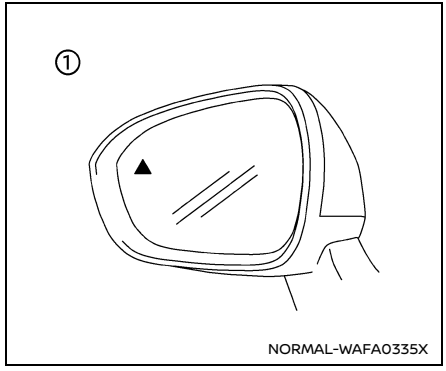

① Side indicator light

RCTA SYSTEM OPERATION

The RCTA system can help alert the driver of an approaching vehicle when the driver is backing out of a parking space.

When the shift position is in R (Reverse) and the vehicle speed is less than approximately 5 MPH (8 km/h), the RCTA system is operational.

If the radar detects an approaching vehicle from either side, the system chimes (once) and the side indicator light flashes on the side the vehicle is approaching from.

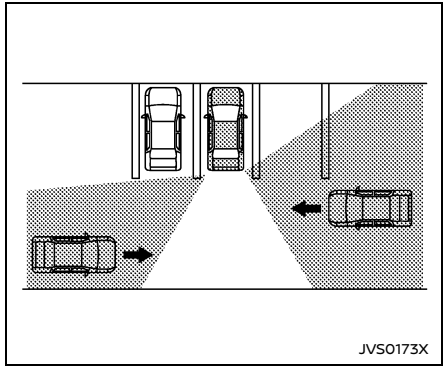

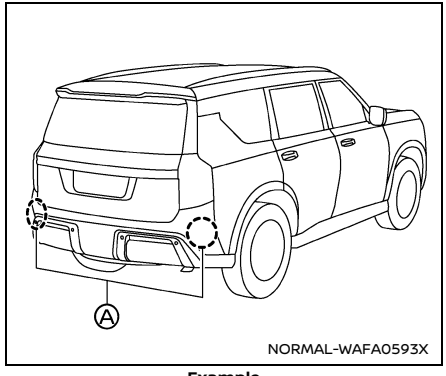

Example

The RCTA system uses radar sensors Ⓐ installed on both sides near the rear bumper to detect an approaching vehicle.

The radar sensors can detect an approaching vehicle from up to approximately 66 ft (20 m) away.

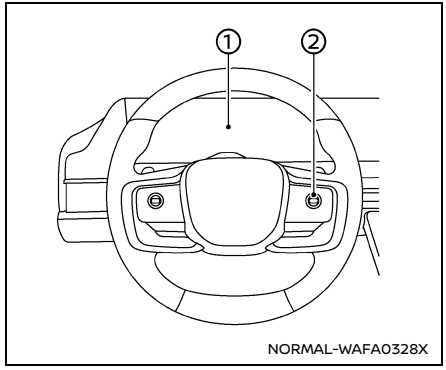

① Vehicle information display
② Steering-wheel-mounted controls (right side)

HOW TO ENABLE/DISABLE THE RCTA SYSTEM

Perform the following steps to enable or disable the RCTA system.

1. Push the ◀ ▶ button on the right side of the steering wheel ② until "Settings" appears in the vehicle information display and then push the scroll dial. Use the scroll dial to select "Driver Assistance". Then push the scroll dial.
2. Use the button to select "Parking Assist", then select "Rear Cross Traffic Alert" then press the scroll dial.
3. Push the scroll dial to enable or disable the system.

NOTE:
The system setting will be retained even if the engine is restarted.

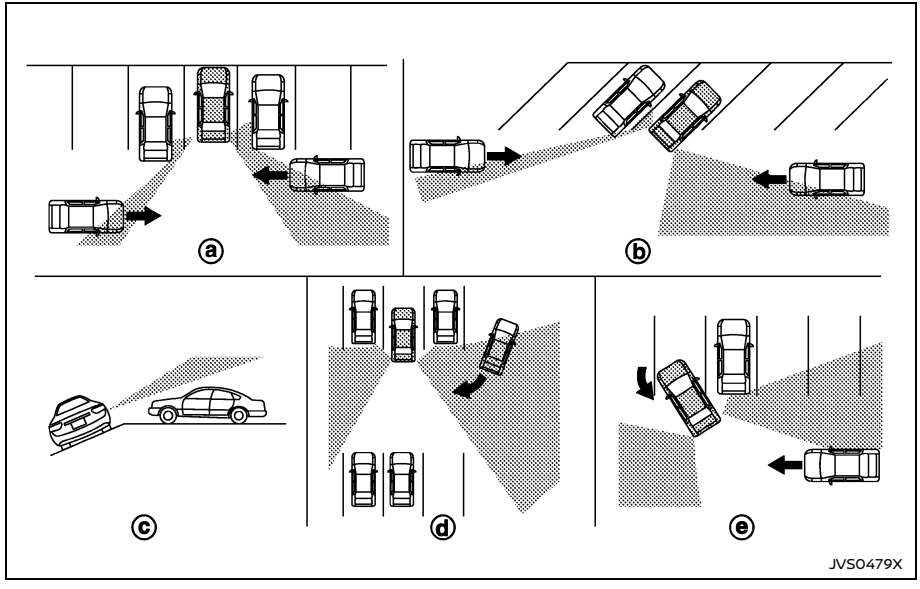

RCTA SYSTEM LIMITATIONS

⚠ WARNING

Listed below are the system limitations for the RCTA system. Failure to operate the vehicle in accordance with these system limitations could result in serious injury or death.

- **Always check surroundings and turn to check what is behind you before backing up. The radar sensors detect approaching (moving) vehicles. The radar sensors cannot detect every object such as:**
  - **Pedestrians, bicycles, motorcycles, animals or child-operated toy vehicles**
  - **A vehicle that is passing at speeds greater than approximately 19 MPH (30 km/h)**
  - **A vehicle that is passing at speeds lower than approximately 5 MPH (8 km/h)**
- **The radar sensors may not detect approaching vehicles in certain situations:**
  - **Illustration ⓐ: When a vehicle parked next to you obstructs the beam of the radar sensor.**
  - **Illustration ⓑ: When the vehicle is parked in an angled parking space.**

- Illustration ⓒ: When the vehicle is parked on inclined ground.
- Illustration ⓓ: When an approaching vehicle turns into your vehicle's parking lot aisle.
- Illustration ⓔ: When the angle formed by your vehicle and approaching vehicle is small

- The following conditions may reduce the ability of the radar to detect other vehicles:
  - Severe weather
  - Road spray
  - Ice/frost/snow/dirt build-up on the vehicle
  - Interference by other radar sources (nearby broadcasting stations, radar-equipped vehicles, etc.)
- The radar sensors are designed to ignore most stationary objects, however objects such as guardrails, walls, foliage and parked vehicles may occasionally be detected. This is a normal operation condition.
- Do not attach stickers (including transparent material), install accessories or apply additional paint near the radar sensors. These conditions may reduce the ability of the radar to detect other vehicles
- Excessive noise (e.g. audio system volume, open vehicle window) will interfere with the chime sound, and it may not be heard.

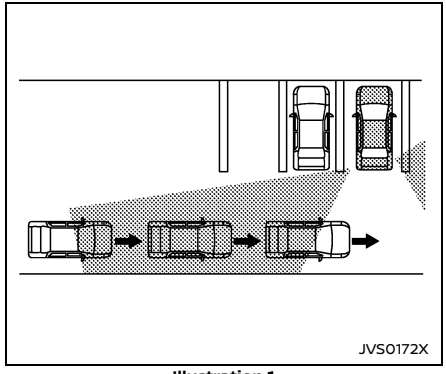

Illustration 1

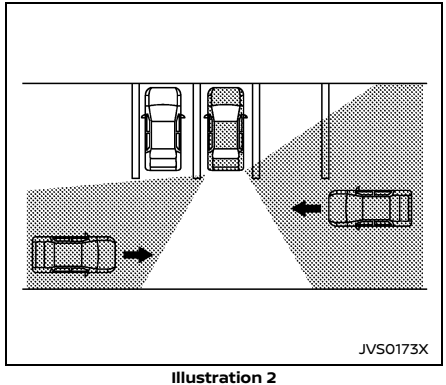

Illustration 2

NOTE:
In the case of several vehicles approaching in a row (Illustration 1) or in the opposite direction (Illustration 2), a chime may not be sounded by the RCTA system after the first vehicle passes the sensors.

SYSTEM TEMPORARILY UNAVAILABLE

When radar blockage is detected, the system will be deactivated automatically. The "Unavailable Side Radar Obstruction" warning message will appear in the vehicle information display.

The systems are not available until the conditions no longer exist.

The radar sensors may be blocked by temporary ambient conditions such as splashing water, mist or fog.

The blocked condition may also be caused by ice, frost, snow or dirt obstructing the radar sensors.

When the TOW mode (if so equipped) is selected or trailer BSW function is activated, the "Rear Driving Aids Unavailable Towing Assist Activated" warning message will appear in the vehicle information display and the RCTA system is deactivated automatically. See "Trailer BSW function operation" (P.330) for more details about the TOW mode (if so equipped) and the trailer BSW function.

NOTE:

- **If the BSW system stops working, the RCTA and Intelligent Blind Spot Intervention (I-BSI) systems will also stop working.**
- **If the Trailer BSW function is activated or the TOW mode has been selected (if so equipped), the RCTA and Intelligent Blind Spot Intervention (I-BSI) systems will stop working.**

Action to take:
When the above conditions no longer exist, the system will resume automatically.

SYSTEM MALFUNCTION

When the RCTA system malfunctions, it will turn off automatically. The "Malfunction See Owner's Manual" warning message will appear in the vehicle information display.

NOTE:
If the BSW system stops working, the RCTA and I-BSI system will also stop working.

Action to take:
Stop the vehicle in a safe location, turn the engine off and restart the engine. If the message continues to appear, have the system checked. It is recommended that you visit a NISSAN dealer for this service.

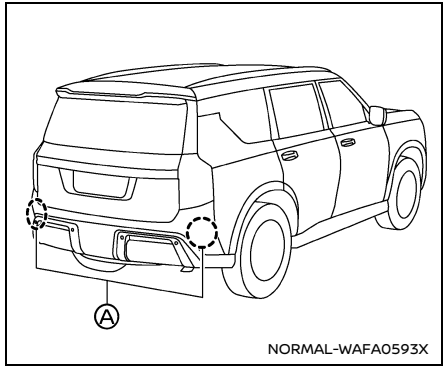

Example

SYSTEM MAINTENANCE

Basic information

The two radar sensors Ⓐ for the RCTA system are located near the rear bumper. Always keep the area near the radar sensors clean.

The radar sensors may be blocked by temporary ambient conditions such as splashing water, mist or fog.

The blocked condition may also be caused by ice, frost, snow or dirt obstructing the radar sensors.

Check for and remove objects obstructing the area around the radar sensors.

Do not attach stickers (including transpar-

ent material), install accessories or apply additional paint near the radar sensors.

Do not strike or damage the area around the radar sensors. It is recommended that you visit a NISSAN dealer if the area around the radar sensors is damaged due to a collision.

Precautions on repairing the bumper

When repairing the bumper, take caution because the radar sensors are installed on the bumper.

The radar sensor detects objects by emitting a radar signal and then measuring its reflection.

⚠ WARNING

If an improper repair is performed on the bumper (for example, application of putty made from different materials, repaint, etc.) the radar signal could be weakened or prevented from functioning properly. This may cause the radar sensor not to detect objects correctly. Improper repair may result in serious personal injury. If it is necessary to repair the bumper, it is recommended you visit a NISSAN dealer for this service.

Radio frequency statement

For USA

This device complies with Part 15 of the FCC Rules. Operation is subject to the following two conditions: (1) this device may not cause harmful interference, and (2) this device must accept any interference received, including interference that may cause undesired operation.

CAUTION TO USERS

Changes or modifications not expressly approved by the party responsible for compliance could void the user`s authority to operate the equipment.

For Canada

This device contains license-exempt transmitter(s)/receiver(s) that comply with Innovation, Science and Economic Development Canada's license-exempt RSS(s). Operation is subject to the following two conditions: (1) This device may not cause interference. (2) This device must accept any interference, including interference that may cause undesired operation of the device.

L'émetteur/récepteur exempt de licence contenu dans le présent appareil est conforme aux CNR d'Innovation, Sciences et Développement économique Canada applicables aux appareils radio exempts de licence. L'exploitation est autorisée aux deux conditions suivantes : 1) L'appareil ne doit pas produire de brouillage; 2) L'appareil doit accepter tout brouillage radioélectrique subi, même si le brouillage est susceptible d'en compromettre le fonctionnement.

OVERVIEW

ProPILOT Assist is a hands on driver assistance system intended for limited access expressways and not designed to be used on city/rural streets. The system is intended to help keep the vehicle in the center of the lane and maintain a preset distance to the vehicle ahead traveling in the same lane. There are three available levels of ProPILOT Assist which include the following additional features:

ProPILOT Assist:

- Intelligent Cruise Control (P.362)
- Steering Assist (P.370)

ProPILOT Assist 2.1 (if so equipped) (includes features of ProPILOT Assist):

- Speed Adjust by Route (P.369)
- Speed Limit Assist (P.368)
- Extended stop (See "Intelligent Cruise Control (ICC)" (P.362).)
- Steering Assist with HD map data (P.373)
- Lane Change Assist (P.376)
- Passing Assist (P.378)

NOTE:

- **ProPILOT Assist features work by itself.**
- **ProPILOT Assist 2.1 features work only when the HD MAP data is available, and require a subscription.**

To determine if your vehicle is equipped:

ProPILOT Assist will have a steering wheel similar to this image and only one roof mounted antenna:

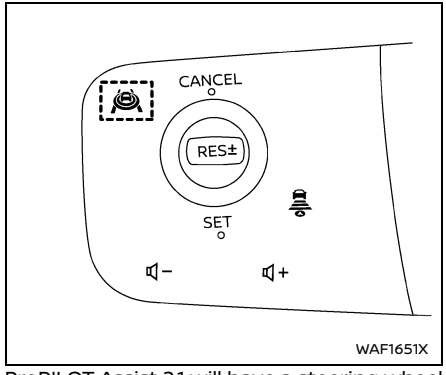

ProPILOT Assist 2.1 will have a steering wheel similar to this image and two roof mounted antennas (left side is GNSS antenna):

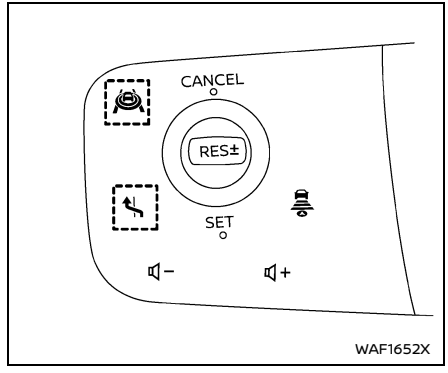

NOTE:
It is important to understand which features your vehicle is equipped as some portions of this section may not be applicable.

⚠ WARNING

Applicable to ProPILOT Assist suite of systems, including ProPILOT Assist, ProPILOT Assist 2.1, Intelligent Cruise Control (ICC), Steering Assist, Lane Change Assist, Passing Assist, Driver Monitoring System and conventional (fixed speed) cruise control, referenced below as "ProPILOT Assist systems" (All systems if so equipped).

- **Failure to follow the following warnings and instructions for proper use of the ProPILOT Assist systems, as applicable, could result in an accident causing serious injury or death.**
- **Always drive carefully and attentively when using the ProPILOT Assist systems. Read and understand the Owner's Manual thoroughly before using the ProPILOT Assist systems. To avoid serious injury or death, do not rely on the systems to prevent accidents or to control the vehicle's speed in emergency situations.**
- **Do not use the ProPILOT Assist systems except in appropriate road and traffic conditions.**
- **The ProPILOT Assist systems are for limited access freeway use only and are not intended for city driving.**
- **The ProPILOT Assist systems are not self-driving systems. Within the limits of their capabilities, as described in this manual, they help the driver with certain driving activities.**
- **The ProPILOT Assist systems are not replacements for proper driving procedures and will not correct careless, inattentive or absent-minded driving. Regardless of which system or function is being used, it is the driver's responsibility to stay alert, drive safely, and be in control of the vehicle at all times. Failure to apply the brakes or steer the vehicle when necessary may result in a serious accident.**
- **The ProPILOT Assist systems are only aids to assist the driver and are not collision warning or avoidance devices.**
- **There are limitations to the ProPILOT Assist systems' capabilities. Never rely solely on these systems. The ProPILOT Assist systems do not function in all driving, traffic, weather and road conditions.**
- **Never unfasten your safety seat belt when using the ProPILOT Assist. Doing so automatically cancels the ProPILOT Assist systems.**
- **When using the ProPILOT Assist systems, always observe posted speed limits and do not set the speed over them.**
- **When the accelerator pedal is depressed, the ProPILOT Assist systems will not provide automatic braking and/or the approach warning. The driver must manually control the vehicle speed to maintain a safe distance to the vehicle ahead. Failure to do so could result in severe personal injury or death.**
- **Do not rely on the ProPILOT Assist systems to prevent accidents. The driver must maintain a safe distance to the vehicle ahead by braking or accelerating, depending on the surrounding circumstances.**
- **When using Steering Assist, it is the driver's responsibility to stay alert, drive safely, keep the vehicle in the traveling lane and be in control of the vehicle at all times. Never take your hands off the steering wheel while driving unless the driving conditions allow and the ProPILOT Assist system is in Hands Off mode. Keep your hands on the steering wheel and drive the vehicle safely. (for ProPILOT Assist 2.1)**
- **Steering Assist is intended for use on limited access freeways with gentle (moderate) curves. To avoid risk of an accident, do not use this system on local or non-highway/freeway roads.**

- **Steering Assist only steers the vehicle to maintain its position in the center of a lane. The vehicle will not steer to avoid objects in the road in front of the vehicle, to avoid a vehicle moving into your lane or to avoid a vehicle approaching from the side.**
- **Lane Change Assist and Passing Assist only assist the driver to make a lane change. These systems do not steer the vehicle to avoid a collision. Be sure to keep your hands on the steering wheel and move safely to a different lane.**
- **When using conventional (fixed speed) cruise control mode, a warning chime does not sound to warn you if you are too close to the vehicle ahead, as neither the presence of the vehicle ahead nor the vehicle-to-vehicle distance is detected. Pay special attention to the distance between your vehicle and the vehicle ahead of you, or a collision could occur.**
- **Always confirm the setting in the ICC system display.**
- **Do not use the conventional (fixed speed) cruise control mode when driving under the following conditions (doing so could cause a loss of vehicle control and result in an accident):**
  - **When it is not possible to keep the vehicle at a set speed**
  - **In heavy traffic or in traffic that varies in speed**
  - **On winding or hilly roads**
  - **On slippery roads (rain, snow, ice, etc.)**
  - **In very windy areas**

PROPILOT ASSIST SYSTEMS OVERVIEW

Each ProPILOT Assist feature is designed to help the driver in different ways as they drive.

Here is a summary of these features. See the specified page for detailed information. The availability of each feature depends on the type of the ProPILOT Assist system (ProPILOT Assist or ProPILOT Assist 2.1).

Conventional (fixed speed) Cruise Control	
Allows the driver to drive the vehicle at a fixed speed without keeping their foot on the accelerator pedal.	
Assist	**Assist 2.1**
○	○

Intelligent Cruise Control (ICC)	
Helps the driver maintain a selected distance from the vehicle ahead and can reduce the speed to match a slower vehicle ahead. Decelerates the vehicle to a standstill when a vehicle ahead slows to a stop.	
Assist	**Assist 2.1**
○	○

Extended Stop	
Enables the vehicle to start moving again automatically if vehicle is stopped for less than approximately 30 seconds on the highway.	
Assist	**Assist 2.1**
-	○

Speed Limit Assist	
A feature of the Intelligent Cruise Control that detects a change of the speed limit, indicates the detected speed limit sign and can apply to the vehicle set speed automatically or manually.	
Assist	**Assist 2.1**
-	○

Speed Adjust by Route	
A feature of Intelligent Cruise Control that adjusts the vehicle speed depending on road curvature in freeway curves and freeway interchanges, using road information provided by the map locator system.	
Assist	**Assist 2.1**
-	○

Steering Assist	
Assists the driver to help keep the vehicle within the center of the traveling lane.	
Assist	**Assist 2.1**
○	○

Steering Assist with HDMAP data	
If traffic and other conditions and laws permit, and it is safe to do so, driver's hands can be taken off the steering wheel. Always pay attention to the road and the operation of the vehicle.	
Assist	**Assist 2.1**
-	○

Lane Change Assist	
Help the driver make a lane change when the turn signal is activated.	
Assist	**Assist 2.1**
-	○

Passing Assist	
Help the driver make a lane change when a slower vehicle is detected ahead.	
Assist	**Assist 2.1**
-	○

PROPILOT ASSIST MODE INDICATORS

Basic information

ProPILOT Assist has a variety of modes depending on various conditions and are represented by color. The system will automatically transition to the highest available mode when conditions are met. The list below shows the available system modes (higher mode towards the bottom) and the required conditions.

Mode indicator:

- **OFF**
  - No systems active — driver initiation required
- **Gray**
  - No systems active — driver activation required
- **White**
  - Intelligent Cruise Control (ICC) active
- **Green**
  - ICC and Steering Assist active
  - Driver is holding the steering control
- **Blue (if ProPILOT Assist 2.1 is equipped)**
  - ICC and Steering Assist active
  - If driver is paying attention to the traffic and other conditions and laws permit, and it is safe to do so, driver is able to take off their hands from the steering wheel.

NOTE:
If the steering wheel icon is yellow, this indicates that Steering Assist may be limited and the driver should take over steering.

How it works:

ProPILOT Assist Systems use some or all of the following components:

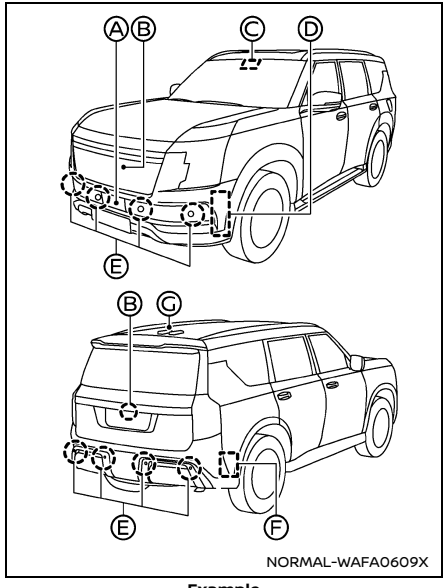

Example

Ⓐ **Front radar sensor:**
Monitors the vehicle ahead in the same and adjacent lanes.

Ⓑ **Intelligent Around View® Monitor cameras (front and rear) (ProPILOT Assist 2.1 only):**
Monitor the surroundings.

Ⓒ **Multi-sensing front camera:**
Monitors the other vehicles and empty spaces in adjacent lanes as well as lane markings.

Ⓓ **Side radar sensors (front) (ProPILOT Assist 2.1 only):**
Monitor the other vehicles and empty spaces in the adjacent lanes.

Ⓔ **Sonar sensors:**
Monitor the surroundings. (The number of sensors varies depending on the models.)

Ⓕ **Side radar sensors (rear) (ProPILOT Assist 2.1 only):**
Monitor the other vehicles in the adjacent lanes and approaching from the rear (i.e. blind spot).

Ⓖ **GNSS (Global Navigation Satellite System) antenna (ProPILOT Assist 2.1 only):**
Used to gather GNSS signal to understand vehicle positioning.

NOTE:
It is important to ensure the radar sensors, cameras and sonar sensors are clear before each drive. Unclean or damaged cameras and sensors, as well as environmental conditions, can affect system performance.
Always keep the area near the radar sensors clean.
The radar sensors may be blocked by temporary ambient conditions such as snow, splashing water, mist or fog.
The blocked condition may also be caused by ice, frost, snow or dirt obstructing the radar sensors.
Check for and remove objects obstructing the area around the radar sensors.
Do not attach stickers (including transparent material), install accessories or apply additional paint near the radar sensors.
Do not strike or damage the area around the radar sensors.
See a NISSAN dealer or other authorized repair shop if the area around the radar sensors is damaged due to a collision.

Precautions on repairing the bumper
When repairing the bumper, take caution because the radar sensors are installed on the bumper.
The radar sensor detects objects by emitting a radar signal and then measuring its reflection.

⚠ WARNING

If an improper repair is performed on the bumper (for example, application of putty made from different materials, repaint, etc.) the radar signal could be weakened or prevented from functioning properly. This may cause the radar sensor not to detect objects correctly. Improper repair may result in serious personal injury. If it is necessary to repair the bumper, it is recommended you visit a NISSAN dealer for this service.

Limitations

Many factors can impact the performance of ProPILOT Assist systems, causing the systems not to perform as intended. ProPILOT Assist functions should not be used in certain situations. These include (but are not limited to):

- Poor visibility due to heavy rain, snow, ice, fog, etc.
- Bright light (due to oncoming traffic, direct sunlight, etc.)
- Obstruction to radars, sensors and cameras caused by mud, dirt, ice, snow, etc.
- Interference to sensors and radars (such as a bike rack, decals, etc.)
- Faded or inconsistent lane markings, road pylons, barrels, temporary barriers, cones, or other items in a construction zone
- Construction zones
- Barren landscape
- Wide or narrow lanes
- Hard deceleration
- Tollbooths

NOTE:
ProPILOT Assist may operate even in the construction zone. Drive carefully while paying attention to the surroundings.
ProPILOT Assist may not react to:

- Stationary vehicles
- Pedestrians, bicycles or animals
- Road debris
- Road pylon in a construction zone

See "Overview" (P.349) for additional system limitations.

⚠ WARNING

Listed below are the system limitations for the ProPILOT Assist functions and systems, including ProPILOT Assist, ProPILOT Assist 2.1, Intelligent Cruise Control (ICC), Steering Assist, and Lane Change Assist. Failure to operate the vehicle in accordance with these system limitations could result in serious injury or death:

- **These systems are primarily intended for use on freeways. It is not advisable to use these systems in city/urban traffic.**
- **These systems will not adapt automatically to all road conditions. They should be used in evenly flowing traffic. Do not use these systems on roads with sharp curves or in inclement weather or adverse road conditions.**
- **There are performance limits to all ProPILOT Assist functions. Never rely solely on these systems. These systems do not correct careless, inattentive, or absent-minded driving or overcome poor visibility in inclement weather.**
- **When using these systems, the driver must be attentive to the driving task. When necessary, decelerate the vehicle speed by using the brake pedal, accelerate using the accelerator pedal, and steer the vehicle as appropriate in order to maintain a safe distance between vehicles and manage changing or dynamic traffic, vehicle and roadway conditions including in construction zones.**
- **When the ProPILOT Assist function automatically brings the vehicle to a stop, your vehicle can automatically accelerate if the vehicle is stopped for less than approximately 3 seconds (for ProPILOT Assist) or 30 seconds (for ProPILOT Assist 2.1 and only when on a limited access freeway as identified in the Map locator system). Always be prepared to apply the brakes and stop your vehicle if necessary.**
- **Always check your surroundings before restarting the vehicle when it has been at a stop.**

- **In order to maintain a safe distance to the vehicle ahead to avoid the possibility of accidents, property damage, serious injury or death, never use the ICC system if you are towing a trailer or other vehicle. If the ICC sensor cannot detect the vehicle ahead, the system may not function properly.**
- **These systems are not designed to detect anything other than motorized vehicles travelling in the same direction on the roadway. In particular, the systems do not detect the following objects:**
  - **Pedestrians, animals or objects in the roadway**
  - **Oncoming vehicles in the same lane**
  - **Motorcycles travelling offset in the travel lane**
  - **Road debris**
- **When the trailer BSW function is activated, the Steering Assist function is canceled.**
- **The ProPILOT Assist functions will not work properly or will be canceled if any of following conditions are met.**
  - **Steering Assist function is canceled when the Trailer BSW function is activated or the Drive Mode Selector is set to Tow mode (if so equipped) (see "Drive Mode Selector (if so equipped)" (P.312)).**
  - **The air suspension (if so equipped) is set to HIGH level, the vehicle height is in the changing state, or the suspension system is malfunctioning (see "Air suspension system (if so equipped)" (P.413)).**
  - **The system determined that it cannot correctly detect the vehicle behind in an adjacent lane.**
  - **When 4H/4L (if so equipped) mode is selected (4WD model).**
- **In the following situations, the ProPILOT Assist functions and system may not operate properly. To avoid accidents or unwanted system operation, never use these systems under the following conditions:**
  - **On roads with heavy, high-speed traffic or sharp curves**
  - **On slippery or adverse road surfaces, such as on wet, icy or snowy roads, or when roadway traffic is causing adverse travel conditions (i.e. road spray from passing vehicles)**
  - **On unpaved or uneven roadway surfaces, or on steep uphill or downhill roads**
  - **During inclement weather, such as rain, snow, fog, ice, sandstorms or dust storms**
  - **When sensor detection capabilities are reduced, for example:**
    - **When snow/ice/dirt are covering the sensors or the camera area of the windshield is fogged up**
    - **When objects, such as stickers, bike racks or cargo obstruct the vehicle sensors**
    - **When strong light (for example, sunlight or high beams from oncoming vehicles) enters the cameras or there is a sudden change in brightness (for example, entering or exiting a tunnel or driving under a bridge)**
  - **When traffic conditions make it difficult to keep a proper distance between vehicles because of frequent acceleration or deceleration, or when the cut-in detection function or approach warning activates frequently**
  - **When a complicated-shaped vehicle, such as a car carrier trailer or flatbed truck/trailer is near the vehicle ahead**

- When there is interference by other radar sources
- When driving with vehicle equipment that is not original to the vehicle (for example, equipped with non-original brake, tire or suspension parts) or not within normal conditions (for example, tire wear, abnormal tire pressure, installation of tire chains, reduced headlight brightness)
- When excessively heavy baggage is loaded in the rear seat or cargo area of the vehicle, or when vehicle load capacity is exceeded.
- When towing a trailer or other vehicle
- When driving on roads with missing, unclear, discontinued or less detectable lane markers or roads with multiple parallel lane markers, or roads with markings or features that might be detected as lane markers (for example, wheel ruts and paving seams)
- When driving on roads where the lane markers or traffic patterns are changing, temporary or unusual (for example, merging or separating lanes, widening/narrowing lanes, exit ramps, toll gates, construction zones, lane closures)
- When the lane markers are not visible due to darkness and the headlights are off

- There are variety of conditions and situations in which the detection of a vehicle ahead may be delayed or the vehicle ahead may not be detected. A few examples include:
  - A vehicle suddenly cuts in front of your vehicle
  - When driving on a blind curve or winding road
  - A stationary vehicle or vehicle travelling at a much slower speed suddenly becomes apparent after the vehicle ahead changes lanes
  - When motorcycles are traveling offset from the center of the lane
- Drivers should always be attentive and take action if needed to manage the roadway and traffic situation.
- The Driver Monitoring System used to support ProPILOT Assist 2.1 may not detect the driver's condition in all situations, including:
  - When the camera or the driver is lit by sunlight or there are repeated changes in brightness (in sunlight and shadow alternatively)
  - When portions of the driver's face or head are hidden (for example, inappropriate driving position (see "Driver Monitor (ProPILOT Assist 2.1)" (P.375)), wearing sunglasses, a face mask or a hat)
  - When there is an obstruction between the driver's face and the monitoring camera
  - When the monitoring camera lens becomes dirty or obscured (see "System maintenance" (P.376))
  - When more than one face is recognized near the driver's seat (for example, a passenger is leaning over toward the driver)
  - When the driver narrows their eyes or loses their driving posture (for example, avoiding the sun glare, etc.)
- The side radar sensors may not detect or may have delayed detection of vehicles in adjacent lanes in some conditions, for example, vehicles approaching rapidly from behind, particularly high or low ground clearance vehicles, motorcycles, or a vehicle which has recently entered that zone from behind. Stay alert to surrounding vehicles and operate the steering wheel as needed for traffic conditions.

- **In some conditions, a vehicle or object can unexpectedly come into the sensor detection zone and cause automatic braking. Always stay alert and avoid using the systems where not recommended.**
- **Excessive noise will interfere with the warning chime sound and the beep may not be heard.**

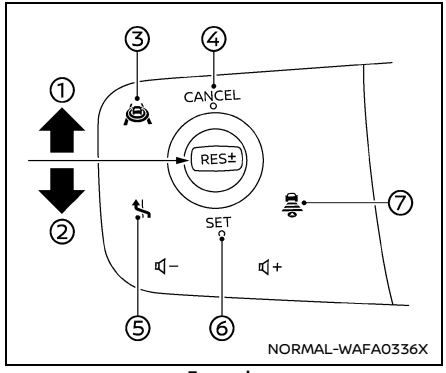

Example

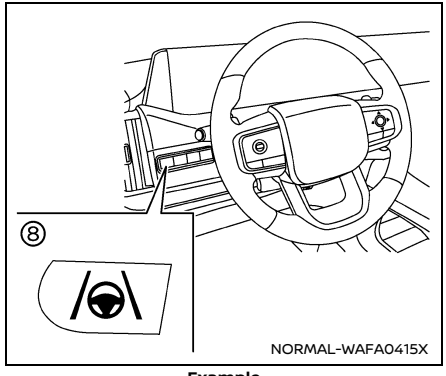

Example

How to operate ProPILOT Assist

NOTE:
All available systems and features are activated simultaneously when ProPILOT Assist is activated.

① RES± switch (RES+ operation):
Resumes vehicle speed or increases cruise speed incrementally

② RES± switch (RES- operation):
Resumes vehicle speed or decreases cruise speed incrementally

③ ProPILOT Assist switch:
Turns the ProPILOT Assist on or off

④ CANCEL switch:
Deactivates the ProPILOT Assist

⑤ Lane Change Assist switch (ProPILOT Assist 2.1):
Accepts or declines a lane change assist suggestion

⑥ SET switch:
Sets desired cruise speed

⑦ Distance switch:
Adjust distance to lead vehicle

⑧ Steering Assist switch:
Turns the Steering Assist function on or off

Turning on ProPILOT Assist (2–step operation):

1. Push the ProPILOT Assist switch ③.
   - The ProPILOT Assist display appears.

- Safety Shield status screen is temporarily displayed. (See "ProPILOT Assist 2.1" (P.361).)

NOTE:
For conventional (fixed speed) cruise control mode, push and hold the ProPILOT Assist switch for more than 1.5 seconds. No other ProPILOT Assist features are available in the conventional (fixed speed) cruise control mode.

2. Once the vehicle is at the desired speed, push the SET switch ⑥.
   - Vehicle will maintain the set speed unless the vehicle detects a slower vehicle in the traveling lane, or Speed Limit Assist or Speed Adjust by Route is active (for ProPILOT Assist 2.1). (See "Speed Limit Assist (a feature of ProPILOT Assist 2.1)" (P.368) or "Speed Adjust by Route (a feature of ProPILOT Assist 2.1)" (P.369).)
   - Once engaged, ProPILOT Assist displays and indicators will appear. (See "ProPILOT Assist displays and indicators" (P.360).)

NOTE:
If ProPILOT Assist is in standby (step 1), the vehicle will not brake.

How to adjust distance setting:

Cycle through the desired distance using the distance switch ⑦.

- Distance will vary based on the vehicle speed as this setting is time dependent, not based on gap distance. Example distance is below.

Approximate distance at 60 MPH (100 km/h) [ft (m)]

- Setting: 1 bar
  – 90 ft (30 m)
- Setting: 2 bars
  – 150 ft (45 m)
- Setting: 3 bars
  – 200 ft (60 m)

How to change the vehicle set speed:

To increase speed:

- Push up and hold the RES± switch ① to increase speed in 5 MPH (5 km/h) increments.
- Push up and quickly release the RES± switch ① to increase speed by 1 MPH (1 km/h).
- Accelerate to new desired speed and push the SET switch ⑥.

To decrease speed:

- Push down and hold the RES± switch ② to decrease speed in 5 MPH (5 km/h) increments.
- Push down and quickly release the RES± switch ② to decrease speed by 1 MPH (1 km/h).

How to momentarily accelerate or decelerate:

- Depress the accelerator pedal when acceleration is required. Release the accelerator pedal to resume to previously set vehicle speed. Vehicle set speed will blink to indicate the vehicle is traveling faster than the set speed.

NOTE:
Hands must be placed on the steering wheel to accelerate in Hands Off mode.

- Depressing the brake pedal when deceleration is required. Doing so will put the system in standby. Push the RES± switch to either direction ①② to resume to previous set speed.

⚠ WARNING

When the accelerator pedal is depressed, the ICC system will not provide automatic braking and approach warning. The driver must manually control the vehicle speed to maintain a safe distance to the vehicle ahead. Failure to do so could result in severe personal injury or death.

How to enable/disable Steering Assist:

Use the following methods to enable or disable Steering Assist:

- Steering Assist switch ⑧

- Vehicle information display
  Settings → Driver Assistance → Lane Centering Assist → Steering Assist → ON/OFF

NOTE:
Steering Assist setting will remain even after the engine is restarted.

How to cancel ProPILOT Assist:

To cancel the ProPILOT Assist, use either of the following methods:

- Push the CANCEL switch ④. This will put the system in standby.
- Tap the brake pedal. This action will keep the system in standby. To resume, push the RES± switch to either direction ① ② to return to the original vehicle set speed, or push the SET switch ⑥ to set the current vehicle speed.
- Push the ProPILOT Assist switch ③. This will turn off the system and the ProPILOT Assist status indicator will turn off.

NOTE:
When the ProPILOT Assist is canceled while the vehicle is stopped, the system will automatically apply the parking brake.

⚠ WARNING

To prevent the vehicle from moving or rolling unexpectedly, which could result in serious personal injury or property damage, before exiting the vehicle, make sure to push the ProPILOT Assist switch ③ to turn the system off. Push the P (Park) position switch to shift to the P (Park) position, and turn the engine off.

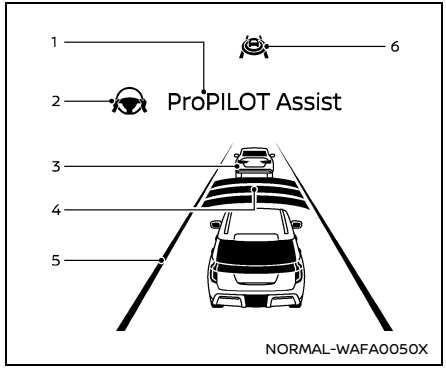

NORMAL-WAFA0050X

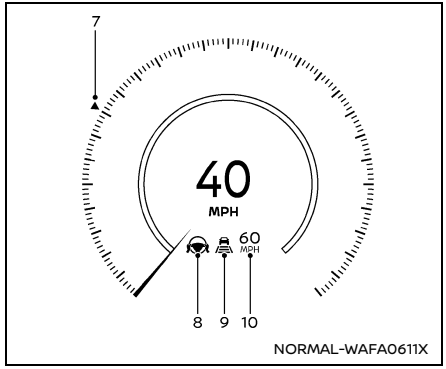

NORMAL-WAFA0611X

PROPILOT ASSIST DISPLAYS AND INDICATORS

ProPILOT Assist

1. **ProPILOT activation**
   Displays once the ProPILOT Assist system is activated
2. **Steering Assist indicator**
   Indicates the status of the Steering Assist function by the color of the indicator
   - Steering Assist indicator (gray): Steering Assist standby
   - Steering Assist indicator (green): Steering Assist active
3. **Vehicle ahead detection indicator**
   Displays whether the system detects a vehicle in front of you (only when ICC is active)
4. **Set distance indicator**
   Displays the selected distance
5. **Lane marker indicator**
   Indicates whether the system detects lane markers
   - No lane markers displayed: Steering Assist is turned off
   - Lane marker indicator (gray): No lane markers detected
   - Lane marker indicator (green): Lane markers detected, Steering Assist is active
   - Lane marker indicator (yellow): Lane departure is detected
6. **ProPILOT status indicator** ( )
   Indicates the status of the ProPILOT Assist system by the color of the indicator
   - ProPILOT Assist status indicator (white): ProPILOT Assist is on but in standby
   - ProPILOT Assist status indicator (blue): ProPILOT Assist active
7. **Vehicle set speed indicator**
   Indicates the vehicle set speed
   - Green triangle: ICC set speed
8. **Steering Assist status indicator/warning** (,)
   Displays the status of the Steering Assist by the color of the indicator/warning
   - No Steering Assist status indicator displayed: Steering Assist is turned off
   - Steering Assist status indicator (gray): Steering Assist standby
   - Steering Assist status indicator (green): Steering Assist active
   - Steering Assist status indicator (yellow): Steering Assist malfunction
   - Steering Assist status indicator (red): Hands off detected
9. **Speed control status indicator/set distance indicator/lane marker indicator** ( )
   Displays the status of speed control by the color of the indicator, and displays the selected distance by the number of horizontal bars shown
   - Speed control status indicator (white): ICC standby
   - Speed control status indicator (green): ICC (distance control mode) is active
   – Green vehicle icon displayed: Vehicle detected ahead
   – No vehicle icon shown: No vehicle detected ahead (Your vehicle maintains the driver-selected set speed.)
   - Speed control status indicator (yellow): Indicates an ICC malfunction

   Displays the status of the Steering Assist by the color of the lane marker indicator.
   - Lane marker indicator (no lane): Steering Assist is turned off
   - Lane marker indicator (gray): Steering Assist standby
   - Lane marker indicator (green): Steering Assist active
10. **Vehicle set speed indicator**
    Indicates the vehicle set speed
    - Gray: ICC standby
    - Green: ICC active

    The speed unit can be converted between "MPH" and "km/h". (See "Unit/Language" (P.120).)

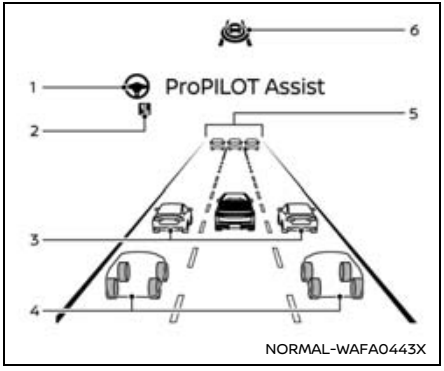

NORMAL-WAFA0443X

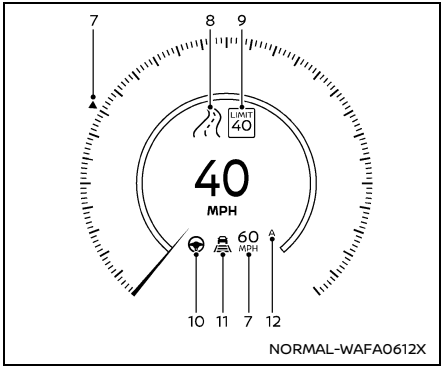

NORMAL-WAFA0612X

ProPILOT Assist 2.1

NOTE:
Display may vary slightly between ProPILOT Assist type.
Display color will change depending on ProPILOT Assist 2.1 mode.
See "ProPILOT Assist mode indicators" (P.352).

1. **Steering Assist indicator**
   Indicates the status of the Steering Assist function.
2. **Lane Change Assist indicator (ProPILOT Assist 2.1)** ( )
   Icon is displayed when Lane Change Assist feature is available.
3. **Side detection (ProPILOT Assist 2.1)**
   Indicates that a vehicle is detected in the side spot.
4. **Surrounding vehicle display (ProPILOT Assist 2.1)**
   Displays other detected vehicles.
5. **Vehicle ahead detection indicator**
   Displays whether the system detects a vehicle in front of you.
6. **ProPILOT Assist 2.1 status indicator**
   Indicates the status of ProPILOT Assist 2.1.
7. **Vehicle set speed Indicator**
   Indicates the vehicle set speed.
8. **Speed Adjust by Route indicator (ProPILOT Assist 2.1)** ( )
   Indicates the status of the Speed Adjust by Route function.
9. **Detected road sign (speed limit) indicator** (LIMIT 40)
   Indicates the currently detected speed limit.
10. **Steering Assist status indicator/warning** (, ,)
    Displays the status of the Steering Assist by the color of the indicator/warning.
    - No Steering Assist status indicator displayed: Steering Assist is turned off
    - Steering Assist status indicator (gray): Steering Assist standby
    - Steering Assist status indicator (green): Steering Assist active
    - Steering Assist status indicator (blue): Steering Assist active (Hands off mode)
    - Steering Assist status indicator (yellow): Steering Assist malfunction
    - Steering Assist status indicator (red): Hands off detected
11. **Intelligent Cruise Control (ICC) status indicator**
    Displays the status of the speed control including the distance setting and detection of a lead vehicle.
12. **Speed Limit Assist indicator (ProPILOT Assist 2.1)** (**A**, ,)
    Indicates the Speed Limit Assist activation mode (Auto or Manual) or system operation.

NOTE:
- **When the ProPILOT Assist is activated, the display will automatically be**

switched to the ProPILOT Assist display. To disable this function, turn off in the vehicle information display: Settings → Customize Display → ProPILOT Assist Display.

- **The ProPILOT Assist 2.1 display is also shown in the Head Up Display (HUD). (See "Head Up Display (HUD) (if so equipped)" (P.146).)**
- **For the license information about HD map data, see "License information (ProPILOT Assist 2.1)" (P.380).**

Safety Shield Status Screen:

The Safety Shield Status Screen will be displayed after initiating the ProPILOT Assist system, prior to setting the vehicle speed. The display is used to show status of driver assistance features for blind spot, forward driving aids, and side aids. Pressing the ProPILOT Assist switch also activates Intervention systems, if selected in the Driver Assistance settings.

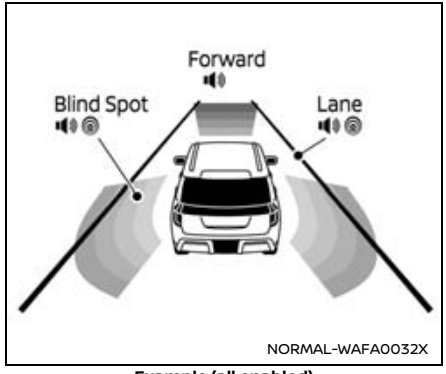

Example (all enabled)

- When any of the "Warning" systems are enabled, the " " mark is shown in each zone.
- When any of the "Intervention" systems are enabled, the " " mark is shown in each zone.
- When no system is enabled, "OFF" is shown in each zone.

NOTE:
To change the status of the driving aids, use the vehicle information display: Settings → Driver Assistance.

INTELLIGENT CRUISE CONTROL (ICC)

Basic information

Intelligent Cruise Control (ICC) is a part of ProPILOT Assist. Read the entire ProPILOT Assist section before using this system, including how to operate the system and understanding the display. (See "ProPILOT Assist Systems" (P.349), "How to operate ProPILOT Assist" (P.357) and "ProPILOT Assist displays and indicators" (P.360).)

The ICC system uses a forward facing radar sensor and is designed to operate as follows:

- When there is no vehicle detected in the same traveling lane, the ICC system maintains the speed set by the driver.
- When there is a vehicle detected in the traveling lane, the ICC system adjusts the speed to maintain the distance, selected by the driver, from the vehicle ahead. If the vehicle ahead comes to a stop, the vehicle decelerates to a standstill. Once your vehicle stops, the ICC system keeps the vehicle stopped.
- When the vehicle traveling ahead moves to a different traveling lane, the ICC system accelerates and maintains vehicle speed up to the set speed. Maximum speed: 90 MPH (144 km/h)

The ICC system can only apply up to 40% of the vehicle's total braking power and should only be used when traffic conditions allow vehicle speeds to remain fairly constant. If

acceleration is required over the ICC system, the driver may override using the accelerator pedal at any time. The system will not brake the vehicle during driver acceleration. The ICC system requires a lead vehicle if the speed is below approximately 15 MPH (24 km/h). Vehicle must be traveling at 20 MPH (30 km/h) to initially set the ICC system.

NOTE:
Brake lights of the vehicle come on when braking is performed by the ICC system.

For ProPILOT Assist 2.1:

For additional available features of the ICC system, see:

- Speed Adjust by Route (P.369) which adjusts speed based on freeway interchanges and freeway curves
- Speed Limit Assist (P.368) helps alert the driver of a speed limit change and can adjust vehicle set speed

System operation

The ICC system can be set to one of two cruise control modes:

- Cruise control — fixed speed (P.366)
- Intelligent Cruise Control — adaptive

NOTE:
Steering Assist is not available in conventional (fixed speed) cruise control.

For Intelligent Cruise Control without Steering Assist, activate ProPILOT Assist and then turn off Steering Assist by the switch or in the settings menu. For additional information, see "How to operate ProPILOT Assist" (P.357) and "Steering Assist" (P.370).

For conventional (fixed speed) cruise control, push and hold the ProPILOT Assist switch for longer than approximately 1.5 seconds then set your desired speed. For additional information, see "Conventional (fixed speed) cruise control" (P.366).

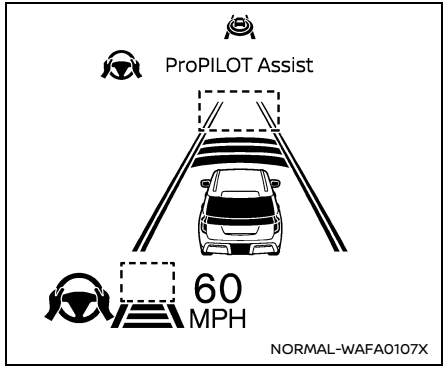

System set display — no vehicle detected ahead (for ProPILOT Assist)

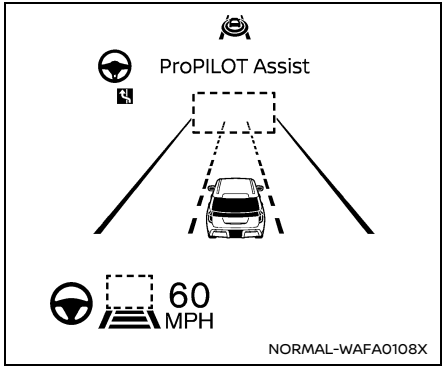

System set display — no vehicle detected ahead (for ProPILOT Assist 2.1)

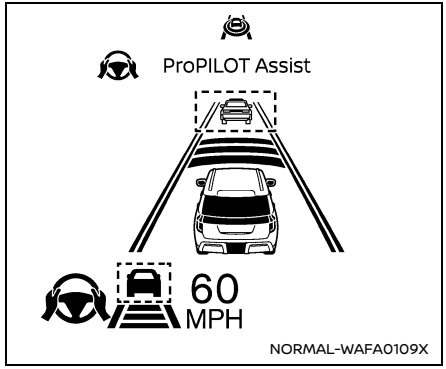

System set display — a vehicle detected ahead (for ProPILOT Assist)

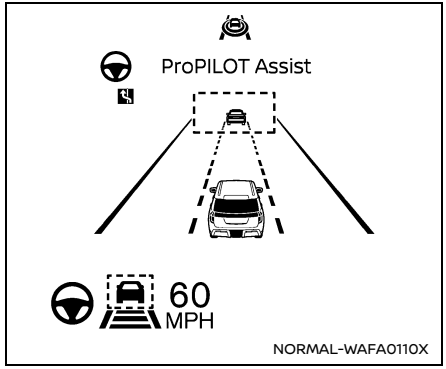

System set display — a vehicle detected ahead (for ProPILOT Assist 2.1)

If no vehicle ahead detected:

The ICC system maintains the vehicle set speed, similar to standard cruise control, as long as no vehicle is detected in the lane ahead.

When a vehicle is no longer detected ahead, the vehicle will gradually accelerate to driver set speed.

If vehicle ahead is detected:

When a vehicle is detected in the lane ahead, the ICC system decelerates to the vehicle by controlling the throttle and applying the brakes to match the speed of the slower vehicle ahead and maintain the driver selected distance.

See "How to operate ProPILOT Assist" (P.357) for more information.

If the vehicle ahead stops:

When a vehicle ahead is detected and it gradually decelerates to a stop, your vehicle will decelerate to a standstill. When at a standstill, the "(RES±) Follow Vehicle Ahead" message is displayed on the vehicle infor-

mation display.

- For vehicles equipped with ProPILOT Assist 2.1, if the vehicle ahead stops and your vehicle is stopped less than approximately 30 seconds on the freeway, the "Follow Vehicle Ahead" message appears on the vehicle information display. When the vehicle ahead begins to move, your vehicle will start moving automatically.
- If not equipped with these systems, or not on a freeway, your vehicle will start moving automatically when it is stopped for less than approximately 3 seconds and the vehicle ahead begins to move. When your vehicle is at a standstill for more than 3 seconds, it will not start to move automatically.

To resume the ICC system after stop, push the RES± switch to either direction or lightly depress the accelerator pedal.

If your vehicle is stationary for more than approximately 3 minutes, the ICC system will be switched off and the electronic parking brake will be applied.

⚠ WARNING

If a vehicle cuts in after your vehicle was stopped by the ICC system, it cannot be detected depending on its position or direction. Your vehicle may approach the cut-in vehicle when restarting. Operate the brake pedal to maintain a safe distance to the vehicle ahead.

Cut-in detection:

If a vehicle moves into your traveling lane near your vehicle, the ICC system may inform the driver by flashing the vehicle ahead detection indicator.

Passing a slower vehicle:

When passing a slower vehicle on the left, the ICC system will temporarily accelerate to aid in the lane change. The system will not exceed set speed during a lane change.

Approach warning:

If your vehicle comes closer to the vehicle ahead due to rapid deceleration of that vehicle or if another vehicle cuts in, the system warns the driver with the chime and ICC system display. Decelerate by depressing the brake pedal to maintain a safe vehicle distance if:

- The chime sounds.
- The vehicle ahead detection indicator blinks.
- You judge it necessary to maintain a safe distance.

The warning chime may not sound in some cases when there is a short distance between vehicles. Some examples are:

- When the vehicles are traveling at the same speed and the distance between vehicles is not changing.
- When the vehicle ahead is traveling faster and the distance between vehicles in increasing.

NOTE:
The approach warning chime may sound and the system display may flash when the radar sensor detects objects on the side of the vehicle or on the side of the road. This may cause the ICC system to decelerate or accelerate the vehicle The radar sensor may detect these objects when the vehicle is driven on winding, narrow, or hilly roads or when the vehicle is entering or exiting a curve. In these cases, you will have to manually control the proper distance ahead of you vehicle. Also, the sensor sensitivity can be affected by vehicle operation (steering maneuver or driving position in the lane) or traffic or vehicle conditions (for example, if a vehicle is being driven with some damage).

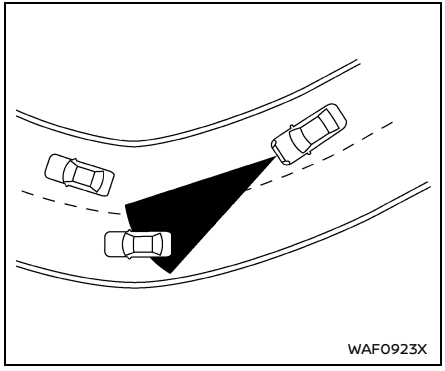

NOTE:
It is important to ensure the radar sensors, cameras and sonar sensors are clean before each drive. Unclean or damaged cameras and sensors, as well as environmental conditions can affect system performance.

Warnings and malfunctions

Under the following conditions, the ICC system is automatically canceled. A chime will sound and the system will not be able to be set:

- The vehicle ahead is not detected and your vehicle is traveling below the speed of 15 MPH (24 km/h). For ProPILOT Assist 2.1 equipped vehicles on a limited access freeway as identified in the Map locator system, the ICC system cancels and a warning chime sounds if your vehicle is at a standstill for more than approximately 3 seconds and a vehicle is not detected ahead.
- Any door is open.
- The driver's seat belt is unfastened.
- Your vehicle has been stopped by the ICC system for approximately 3 minutes or longer.
- The transmission is shifted out of the D (Drive) or the manual shift mode.
- The electronic parking brake is applied.
- The SNOW, SAND, ROCK or MUD/RUT mode is selected (if so equipped).
- The VDC system is turned off.
- The VDC system (including the traction control system) operates.
- A wheel slips.
- The AEB with Pedestrian Detection applied harder braking.
- When the radar signal is temporarily interrupted.
- When the 4H/4L (if so equipped) mode is selected (4WD model).
- When the vehicle height is in HIGH level by the air suspension system (if so equipped).

If limitations are considered, all conditions above are met and the ICC system is still not functioning properly, see "Vehicle information display warnings and indicators" (P.121).

CONVENTIONAL (fixed speed) CRUISE CONTROL

Basic information

Conventional (fixed speed) cruise control is available as an alternative to Intelligent Cruise Control. To turn on conventional cruise control mode:

1. Push and hold the ProPILOT Assist switch Ⓐ for longer than approximately 1.5 seconds.

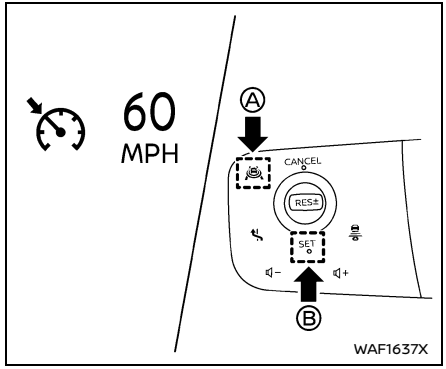

2. Once vehicle is at the desired speed, push the SET switch Ⓑ.
   Once set, the vehicle will maintain the desired set speed as shown by the cruise control icon and set speed indicator displayed above.

For complete detail on the operation of conventional (fixed speed) cruise control, see "How to operate ProPILOT Assist" (P.357).

NOTE:
No other ProPILOT Assist features are available in conventional (fixed speed) cruise control mode. To use the ICC system again, cancel the system (if necessary) and quickly push and release the ProPILOT Assist switch.

⚠ WARNING

To avoid accidentally engaging cruise control, make sure to turn the ProPILOT Assist switch off when not using the ICC system.

System temporarily unavailable

A chime sounds under the following conditions and the control is automatically canceled.

- When the transmission is out of the D (Drive) or the manual shift mode
- When the parking brake is applied
- When the VDC system (including the traction control system) operates
- When the VDC system is turned off
- When a wheel slips

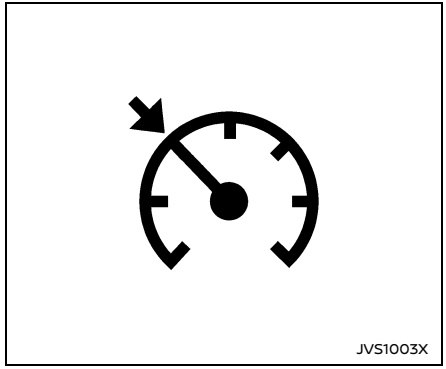

Warning
When the system is not operating properly, the chime sounds and the color of the cruise indicator will change to yellow.

Action to take:
If the color of the cruise indicator changes to yellow, park the vehicle in a safe place. Turn the engine off, restart the engine, resume driving and then perform the setting again.

If it is not possible to set or the indicator stays on, it may indicate that the system is malfunctioning. Although the vehicle is still driveable under normal conditions, have the system checked. It is recommended you visit a NISSAN dealer for this service.

SPEED LIMIT ASSIST (a feature of ProPILOT Assist 2.1)

Speed Limit Assist is a feature of ProPILOT Assist Systems on vehicle equipped with a built-in Map locator system. Read the entire ProPILOT Assist and Traffic Sign Recognition sections before using this system.

When ProPILOT Assist 2.1 is active and it detects a change of the speed limit, the new speed limit is indicated and it can be applied to the vehicle set speed automatically or manually. The Speed Limit Assist operates:

- When the detected speed limit is 20 MPH (30 km/h) and above.
- The "Spd.Limit Assist" is enabled in the settings menu of the vehicle information display.

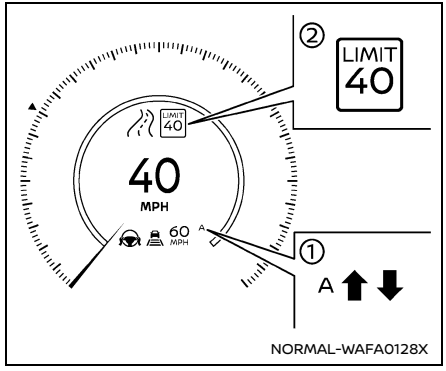

Speed Limit Assist has two modes and is shown in the display ①.

Speed Limit Assist Setting:

- Auto (A): Automatically adopted
- Manual: Request to accept
- Offset: Adds/Subtracts 0–5 MPH (0–10 km/h)
- OFF: Feature is OFF

The Auto mode may not be available in some regions or on roads other than limited access freeways. In this case, the system operates as the Manual mode.

NOTE:

- **Auto mode will not function in Hawaii or US island territories.**
- **Auto mode is only available on limited access freeways as identified in the Map locator system.**

When the system detects a different speed limit by the Traffic Sign Recognition (TSR) system, the new speed value is displayed in ②.

When in Manual mode (factory default setting):

- To accept a newly indicated speed limit, push up the RES± switch for a speed limit increase or push down the RES± switch for a speed limit decrease.
- The speed limit can be rejected by operating the opposite switch from the direction indicated by the Speed Limit Assist indicator.
- If no action is taken, the set speed will remain the same.
- If speed limit offset is on, this value will be added or subtracted from speed limit.

When in Auto mode:

- The indicated speed limit is applied to the vehicle set speed automatically.
- If speed limit offset is on, this value will be added or subtracted from speed limit.
- If ProPILOT Assist is on (standby), but not set (active), and new speed limit is detected, the vehicle set speed is automatically updated.

How to adjust Speed Limit Offset:

Vehicle information display

Settings → Driver Assistance → Intelligent Cruise → Speed Limit Offset → -5 MPH (-10 km/h) to + 5 MPH (+10 km/h)

How to enable/disable/change Speed Limit Assist:

Vehicle information display

Settings → Driver Assistance → Intelligent Cruise → Spd.Limit Assist → Auto/Manual/OFF

NOTE:

- **While the accelerator pedal is operated with Auto mode selected, Speed Limit Assist will function (automatically adjust the vehicle set speed) only when the detected speed limit is faster than the vehicle set speed.**
- **In the following situations, Speed Limit Assist will not operate:**
  - **When an increase in the posted speed limit is detected, but the vehicle set speed is already faster than the new speed limit.**
  - **When a decrease in the posted speed limit is detected, but the vehicle set speed is already lower than the new speed limit.**

WARNING

Listed below are the system limitations for Speed Limit Assist. Failure to operate the vehicle in accordance with these system limitations could result in serious injury or death. It is driver's responsibility to select the proper speed, follow all traffic regulations and observe other road users.

- **Speed Limit Assist may not operate properly and the actual speed limit may not be applied to the vehicle set speed in all conditions. The driver must manually control the vehicle speed.**

  Below are some examples:
  - **When the Traffic Sign Recognition (TSR) system is not functioning properly or turned off. (See "Traffic Sign Recognition (TSR)" (P.316).)**

    When speed limit sign is faded, dirty or distorted.
  - **When driving in countries or areas not covered by the Map locator system.**
  - **When crossing national boundaries.**
  - **When driving on the exit of the limited access freeway as identified in the navigation map data.**
  - **When driving in an area with nearby parallel roads (for example, freeway with a parallel service drive).**
  - **When driving in an area where each lane has a different speed limit sign.**
  - **When driving on a road under construction or in a construction zone.**
  - **When the data from the Map locator system is not up-to-date or is unavailable.**
  - **When the map locator system cannot connect to the server to obtain the map data.**
  - **When the software license of the map locator system is expired.**

SPEED ADJUST BY ROUTE (a feature of ProPILOT Assist 2.1)

Speed Adjust by Route is a feature of ProPILOT Assist Systems on vehicles equipped with a built-in Map locator system. Read the entire ProPILOT Assist section before using this system, including how to operate the system and understanding the display. (See "ProPILOT Assist Systems" (P.349), "How to operate ProPILOT Assist" (P.357) and "ProPILOT Assist displays and indicators" (P.360).)

When the Speed Adjust by Route system is active on limited access freeways, the system uses road information provided by the Map locator system to adjust the vehicle speed depending on road curvature in freeway interchanges and freeway curves. The system may not always reduce speed for all freeway interchanges and freeway curves. The driver may need to apply additional braking at any time. When the vehicle is through the freeway interchanges and freeway curves, the vehicle will accelerate again to the set speed.

When Speed Adjust by Route is active, icon

will appear in the vehicle information display.

	Freeway interchanges and freeway curves

How to enable/disable Speed Adjust by Route:

Vehicle information display

Settings → Driver Assistance → Intelligent Cruise → Speed Adjust by Route→ ON/OFF

NOTE:

- **The system does not operate when the accelerator pedal is depressed.**
- **The system may not operate depending on the set distance to the vehicle ahead.**
- **The system will retain current settings in the vehicle information display even if the engine is restarted.**
- **The Speed Adjust function will be activated when the Steering Assist with HD map data function is active, even if the Speed Adjust by Route feature has been disabled in the vehicle information display (see "Steering Assist with HD map data (a feature of ProPILOT Assist 2.1)" (P.373)).**

⚠ WARNING

Listed below are the system limitations for Speed Adjust by Route. Failure to operate the vehicle in accordance with these system limitations could result in serious injury or death:

- **There are limitations to Speed Adjust by Route system capability. The system does not function in all driving, traffic, weather and road conditions. It is the driver's responsibility to stay alert, drive safely, and be in control of the vehicle at all times.**
- **Speed Adjust by Route does not brake the vehicle to a stop. Whenever necessary, the driver must apply appropriate braking.**
- **Speed adjust by Route will not work for an entrance or exit ramp.**
- **It is the driver's responsibility to select the proper speed, follow all traffic regulations and observe other road users.**
- **Speed Adjust by Route will not function in Hawaii or US island territories.**
- **Speed Adjust by Route may not operate properly in some road and traffic conditions, and the system may unexpectedly change the speed. The driver must manually control the vehicle speed.**

  Below are some examples:

  - **When the map locator system cannot connect to the server to obtain the map data.**
  - **When the software license of the map locator system is expired.**
  - **When the data from the Map locator system is not up-to-date or is unavailable.**
  - **When driving in countries or areas not covered by the Map locator system.**
  - **When driving on a road under construction or newly constructed road.**
  - **When driving near a road split or freeway interchange.**
  - **When driving in bad weather or poor road conditions.**

STEERING ASSIST

Basic information

Steering Assist is a part of ProPILOT Assist Systems. Read the entire ProPILOT Assist section before using this system, including

how to operate the system and understanding the display. (See "ProPILOT Assist Systems" (P.349), "How to operate ProPILOT Assist" (P.357) and "ProPILOT Assist displays and indicators" (P.360).)

Steering Assist uses a forward facing camera to detect clear and consistent lane markings on both sides of the vehicle and is designed to help keep the vehicle in the center of traveling lane. Steering Assist is only available when combined with the Intelligent Cruise Control (ICC) system making up ProPILOT Assist.

Steering Assist can be activated when the following conditions are met:

- The ICC system is activated.
- Lane markings on both sides are clearly detected.
- Your vehicle is traveling above approximately 37 MPH (60 km/h), or a vehicle is detected in front of you when traveling below approximately 37 MPH (60 km/h) (ProPILOT Assist).
- Your vehicle is traveling above approximately 20 MPH (32 km/h), or a vehicle is detected in front of you when traveling below approximately 20 MPH (32 km/h) (ProPILOT Assist 2.1).
- The driver has hands on the steering wheel.
- The vehicle is driven at the center of the lane.
- Turn signals are not active (ProPILOT Assist).
- The windshield wipers are not operated in the high speed position.

When a curve or strong cross wind exceeds the capabilities of the system and your vehicle approaches the lane line, the Intelligent Lane Intervention (I-LI) system will activate. The I-LI system will have a visual and audible alert with steering vibration and will help assist the driver to return to the center of the lane. For more information, see "Lane Departure Warning (LDW)/Intelligent Lane Intervention (I-LI)" (P.319).

How to enable/disable Steering Assist:

Use the following methods to enable or disable Steering Assist:

- Steering Assist switch (located on the left side of the instrument panel as shown in the diagram) (See "How to operate ProPILOT Assist" (P.357).)
- Vehicle information display
  Settings → Driver Assistance →Lane Centering Assist → Steering Assist → ON/OFF

NOTE:
Steering Assist setting will remain even after the engine is restarted.

NOTE:
It is important to ensure the radar sensors, cameras and sonar sensors are clean before each drive. Unclean or damaged cameras and sensors, as well as environmental conditions can affect system performance.

Steering Assist temporary standby

Automatic standby due to driving operation (for ProPILOT Assist):

When the driver activates the turn signal, the Steering Assist is temporarily placed in a standby mode. (The Steering Assist restarts automatically when the operating conditions are met again.)

Automatic standby:

In the following cases, a double chime sounds and the Steering Assist is placed in a temporary standby mode. (The Steering Assist restarts automatically when the operating conditions are met again.)

- When the current traveling lane is too narrow to operate
- When a corner is too tight and the vehicle cannot stay in the traveling lane
- When lane markers on both sides are no longer detected
- When a vehicle ahead is no longer detected under approximately 37 MPH (60 km/h) (ProPILOT Assist) or 20 MPH (32 km/h) (ProPILOT Assist 2.1)
- When strong light enters the camera unit (For example, the light directly shines on the front of the vehicle at sunrise or sunset)
- When the temperature of the camera is too high

NOTE:
For ProPILOT Assist 2.1 equipped vehicles on a limited access freeway as identified in the Map locator system, the Steering

Assist system may continue to operate with visible lane markers on the both sides, even when the vehicle speed is below approximately 20 MPH (32 km/h) and a vehicle is not detected ahead.

Steering Assist cancel

Under the following conditions, the Steering Assist cancels, the chime sounds twice, the warning message appears, and the Steering Assist status indicator and the Steering Assist indicator turn off:

- When unusual lane markers appear in the traveling lane or when the lane marker cannot be correctly detected for some time due to certain conditions (for example, a snow rut, the reflection of light on a rainy day, the presence of several unclear lane markers)
- When the windshield wiper operates in the high speed operation (the Steering Assist is disabled when the wiper operates for more than approximately 10 seconds)
- When the TOW mode (if so equipped) is on or the trailer BSW function is activated.

Action to take:

When the conditions listed above are no longer present, turn Steering Assist on again using the Steering Assist switch.

Steering Assist malfunction

When the system malfunctions, it turns off automatically. The Steering Assist status warning (yellow) illuminates and the "Malfunction See Owner's Manual" warning message will appear in the vehicle information display. A chime may sound depending on the situation.

Action to take:

Stop the vehicle in a safe location, push the park button to shift to the P (Park) position, turn the engine off, restart the engine, resume driving, and set the ICC system again. If the warning (yellow) continues to illuminate, the Steering Assist is malfunctioning. Although the vehicle is still drivable under normal conditions, have the system checked. It is recommended that you visit a NISSAN dealer for this service.

HANDS ON DETECTION

Basic information

When Steering Assist is activated, the vehicle monitors the driver's steering wheel operation using sensors in the steering wheel. When ProPILOT Assist displays in hands on (green) mode, if the steering wheel is not operated or if the driver takes their hands off the steering wheel for a period of time, the warning ① appears and the hands off warning light ② illuminates. See list on the next page for escalating warnings if the system does not detect drivers hands on the wheel.

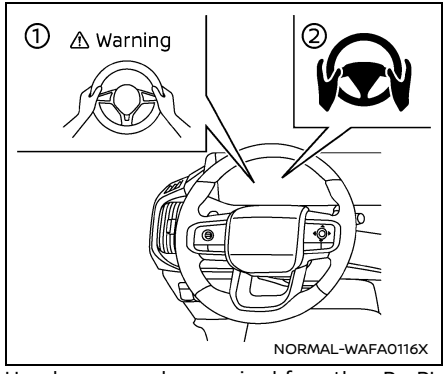

Hands on may be required for other ProPILOT Assist 2.1 features, where the hands on detection function also operates. These functions include Lane Change Assist, Passing Assist as described, while easy assist is operating. (See "Lane Change Assist (ProPILOT Assist 2.1)" (P.376) or "Passing Assist (ProPILOT Assist 2.1)" (P.378).)

NOTE:

The system may not detect the driver's hand(s) on the steering wheel in the following conditions:

- **When the driver is wearing gloves.**
- **When a cover is put on the steering wheel.**
- **When the driver grips the seam of leather or spokes on the steering wheel.**

- **If hands are not detected by touch, it is recommended to provide steering torque.**

Warning and Emergency Stop

In Hands On (green) mode, the vehicle uses sensors in the steering wheel to detect whether the driver has their hands placed on the steering wheel. It is the driver's responsibility to have hands on the wheel in order to avoid these increasing alerts.

- **First Warning:**
  - Message appears in the vehicle information display alerting driving that hands are not detected.
  - Driver must place their hands back on the steering wheel or apply light torque to the steering wheel to clear the message.
- **Second Warning:**
  - Message flashes with escalating beeping sounds to draw driver's attention.
  - Driver must place their hands back on the steering wheel or apply light torque to the steering wheel to clear the message.
- **Third Warning:**
  - The vehicle will apply 2 brake pulses to alert the driver of failure to comply.
  - Driver must place their hands back on the steering wheel or apply light torque to the steering wheel to clear the message.
- **Emergency Stop:**
  - Emergency warning sound will play and a "Manually Steer" or "Take Steering Control" and/or "Slowing to Stop" warning message will display.
  - The vehicle will gradually slow to a complete stop in the traveling lane and the hazard indicator lights will automatically activate when the vehicle reaches approximately 40 MPH (65 km/h).
  - Depending on the models, after the vehicle is brought to an emergency stop, the vehicle is connected to the Emergency Call (SOS) service operator, who then requests relief from public institutions (police, fire department, medical institutions). See "Emergency Call (SOS) button (if so equipped)" (P.173) for more details of the emergency support.
  - After the emergency stop function is activated, the Steering Assist function will be disabled with the "Steering Assist OFF" message displayed until the ignition switch has been switched off and on again.
  - Driver must place their hands back on the steering wheel or apply light torque to the steering wheel to deactivate the emergency stop.

STEERING ASSIST WITH HD MAP DATA (a feature of ProPILOT Assist 2.1)

On ProPILOT Assist 2.1 equipped vehicle, the ProPILOT Assist 2.1 mode indicator turns blue when the condition is met.

When ProPILOT Assist 2.1 activates with blue indicators, traffic and other conditions and laws permit, and it is safe to do so, your hands can be taken off the steering wheel. Always pay attention to the road and the operation of the vehicle.

The driver can override with manual steering at any time. When ProPILOT Assist 2.1 is active, always be prepared to take immediate steering and braking.

For ProPILOT Assist 2.1 to activate with blue indicators, the following conditions must be met. The system may also cancel if any of these conditions are no longer met.

- ProPILOT Assist is active and the driver's hands are detected on the steering wheel.
- The vehicle is driving on a highway or limited access freeway as defined by the HD map data.
- Camera, radar, and Global Navigation Satellite System (GNSS) sensors are functioning and free from obstruction or damage.
- The driver monitor system detects the driver's attention is given to the road ahead.
- All driving, road, and traffic conditions allow.

- Lane markings are clearly visible and able to be detected by the system.
- The vehicle is traveling at a speed less than 85 MPH (137 km/h).

⚠ WARNING

It is the drivers responsibility to always drive in a legal manner and obey all local and state regulations.

Some local and state regulations may require hands to be kept on the steering wheel at all times. Only remove hands from the steering wheel it is safe to do so, and it is permitted by local and state regulations.

How to enable/disable Hands Off mode:

Vehicle information Display

Settings → Driver Assistance → Lane Centering Assist → Hands Off Mode → ON/OFF

⚠ WARNING

Immediately take steering control when the ProPILOT Assist 2.1 display changes to green. (See "Basic information" (P.372).)

Steering Assist with HD map data is not available or may cancel if any of the following conditions are met, but not limited to:

- When the vehicle approaches the area near a toll gate, exit, junction, sharp curve, intersection or where the traveling lane merges.
- When the vehicle approaches an area that is not considered a highway or limited access freeway as defined by the HD map data, the HD map data is not available, or the system detects that the HD map data does not match the current roadway.
- When there is no reception of GNSS signals, including tunnels.
- When driving on a road not separated from the opposite lane.
- When depressing the accelerator pedal or actively using the steering wheel.
- Faded or inconsistent lane markings, road pylons, barrels, temporary barriers, cones, or other items in a construction zone.
- When the driver monitor camera cannot recognize that the driver is driving with careful attention to the front.
- When the driver's face is not directed toward the road even if the gaze is directed forward.
- When the driver's face cannot be seen correctly from the camera installed on the steering column. it may occur when the face is blocked by the hand or when the driver is in a driving posture where the position of the face is difficult to see from the camera.
- When the shape of the mouth, nose, or face cannot be clearly seen due to wearing a mask, glasses, sunglasses, etc.
- When the driver narrows his or her eyes due to bright sunlight, etc.
- The windshield wipers are operated in high speed.
- The AEB with Pedestrian Detection and/or Lane Departure Warning (LDW) system activates.

NOTE:

- **ProPILOT Assist may operate even in the construction zone. Drive carefully while paying attention to the surroundings.**
- **For the license information about HD map data, see "License information (ProPILOT Assist 2.1)" (P.380).**
- **For additional information on HD maps, please visit below:**
  For U.S.:
  https://www.nissanusa.com/experience-nissan/news-and-events/propilot-assist-2-1-driving-map.html
  For Canada (English):
  https://www.nissan.ca/owners/propilot-assist.html
  For Canada (French):
  https://fr.nissan.ca/owners/propilot-assist.html
- **Steering Assist with HD map data will not function in Hawaii or US island territories.**

DRIVER MONITOR (ProPILOT Assist 2.1)

Basic information

ProPILOT Assist 2.1 monitors the driver's attention to the road ahead with a driver facing camera, located on the steering column. The system is looking for head position and direction, eye opening, and eye direction. If the system does not detect driver's attention on the road, a series of warnings will display in an effort to draw the driver's attention back forward.

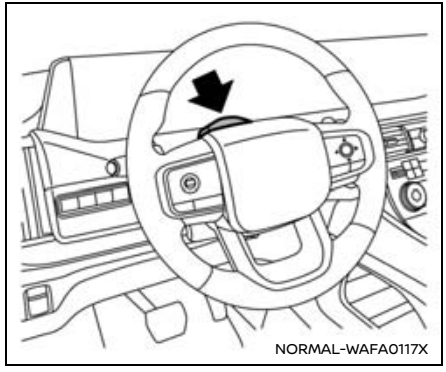
NORMAL-WAFA0117X

NOTE:
The driver monitor is active in all driving modes, not just when ProPILOT Assist 2.1 is active.

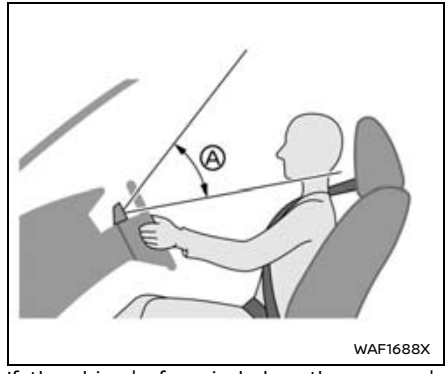

WAF1688X

If the driver's face is below the camera's detection range Ⓐ, the driver monitor may not work properly. Adjust your face position so that the camera can detect your entire face, by lowering the steering column or raise the seat position, for example.

See "Tilt or telescopic operation" (P.2 2 1) and "Front seats" (P.1 8).

System maintenance

Keep the driver monitor area clean. Remove dirt and wipe it off with clean, soft cloth such as lens cleaner.

License information

The driver monitoring system includes software using open source software (OSS). License information can be found on the website below.
http://www.embedded-carmultimedia.jp/RTOS/License/oss/DMS_0401/

ATTENTION TO THE ROAD (ProPILOT Assist 2.1)

On ProPILOT Assist 2.1 equipped vehicles, the vehicle uses a camera-based driver monitor system to determine if the driver is monitoring the road ahead. It is the driver's responsibility to pay attention in order to avoid these increasing alerts:

- **First Warning:**
  - A beep and a message will appear to draw driver's attention toward the road.
  - Driver must look ahead to clear the message.
- **Second Warning:**
  - The message changes and request to take steering control.
  - Message flashes with escalating beeping sounds to draw driver's attention.
  - Driver must place their hands back on the steering wheel or apply light torque to the steering wheel to clear the message.
- **Third Warning:**
  - The vehicle will apply 2 brake pulses to alert the driver of failure to comply.
  - Driver must place their hands back on the steering wheel or apply light torque to the steering wheel to clear the message.
- **Emergency Stop:**
  - Emergency warning sound will play and a "Manually Steer" or "Take Steering Control" and/or "Slowing to Stop" warning message will display.
  - The vehicle will gradually slow to a complete stop in the traveling lane and the hazard indicator lights will automatically activate when the vehicle reaches approximately 40 MPH (65 km/h).
  - Depending on the models, after the vehicle is brought to an emergency stop, the vehicle is connected to the Emergency Call (SOS) service operator, who then requests relief from public institutions (police, fire department, medical institutions). See "Emergency Call (SOS) button (if so equipped)" (P.173) for more details of the emergency support.
  - After the emergency stop function is activated, the Steering Assist function will be disabled with the "Steering Assist OFF" message displayed until the ignition switch has been switched off and on again.
  - Driver must place their hands back on the steering wheel or apply light torque to the steering wheel to deactivate the emergency stop.

LANE CHANGE ASSIST (ProPILOT Assist 2.1)

Basic information

Lane Change Assist is a feature of ProPILOT Assist 2.1. Read the entire ProPILOT Assist section before using this system, including how to operate the system and understanding the display. (See "ProPILOT Assist Systems" (P.349), "How to operate ProPILOT Assist" (P.357) and "ProPILOT Assist displays and indicators" (P.360).)

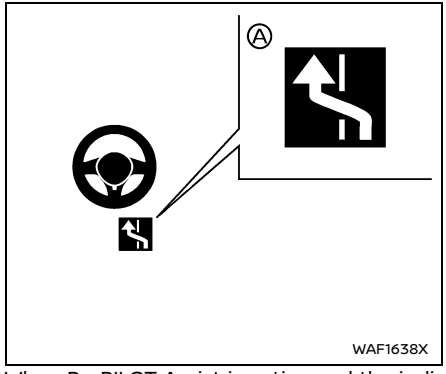

When ProPILOT Assist is active and the indicator Ⓐ is illuminated in blue, Lane Change Assist helps the driver make a lane change when the turn signal is activated. The driver must place their hands on the steering wheel prior to the lane change maneuver and ensure safety throughout the lane change.

The Lane Change Assist indicator will illuminate under the following conditions:

- When the ProPILOT Assist 2.1 display is blue (hands-off mode).
- When driving at speeds more than approximately 37 MPH (60 km/h).
- When driving on a road where there are more than two lanes.
- When either right or left, or both target lanes the vehicle moves to has dotted-white lines.
- When driving on a straight road or road with a gentle curve.
- When driving on a road where the speed limit is 45 MPH (70 km/h) or higher.
- When either the "Activate by turn signal" or "Passing Assist" is enabled.

Lane Change Assist may cancel or not be available under the following conditions:

- When driving on the road where there is a new freeway curves and freeway interchanges, which is not identified in the navigation map.
- When the "Lane Change Assist" is disabled in the settings menu of the vehicle information display (even if the Lane Change Assist indicator illuminates in blue).
- When another vehicle is detected in the target lane.
- When lane markers are no longer detected.
- When the vehicle speed is below approximately 37 MPH (60 km/h).
- When the driver's hands are not detected on the steering wheel.
- When the ICC system/ProPILOT Assist is cancelled.
- When an obstacle is found near the lane marker in the direction of the target lane.
- When road pylons, barrels, temporary barriers, cones, or other items are detected in the adjacent lane.

How to enable/disable Lane Change Assist:

Vehicle information Display Settings → Driver Assistance → Lane Change Assist → Activate by turn signal → ON/OFF

⚠ WARNING

Failure to follow the warnings and instructions for proper use of Lane Change Assist could result in serious injury or death.

- **Lane Change Assist only assists the driver to make a Lane change. The system does not steer the vehicle to avoid a collision. Be sure to keep your hands on the steering wheel and move safely to a different lane.**

NOTE:

The steering operation by the driver is always prioritized. If the driver's hands are not detected, it warns the driver to place their hands on the steering wheel. If hands are not detected in a timely manner, the Lane Change Assist feature may be cancelled.

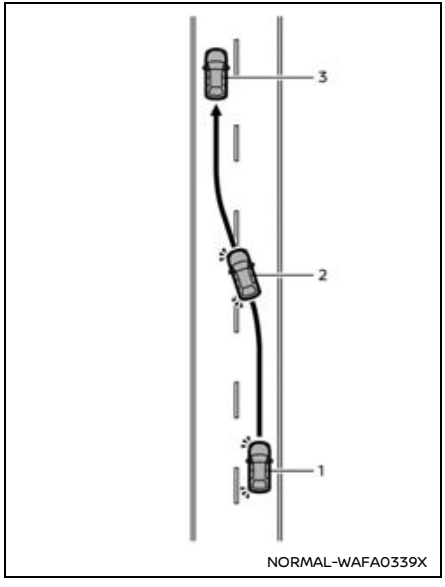

System operation

Before starting a lane change, ensure that the target lane is clear and it is safe to move into the lane.

1. Take steering control and activate the turn signal in the direction of moving.
2. The Lane Change Assist display appears and flashes green, and the system starts to assist the vehicle moving to the target lane by steering control.
3. When the lane change is completed, the turn signal cancels automatically*1. Then Steering Assist operates again.

   *1 If the turn signal lever was moved up or down fully to activate, the turn signal will not cancel automatically even the lane change is stopped. (See "Turn signal switch" (P.160).)
4. Hands off (blue) mode will resume as soon as conditions are met.

The Lane Change Assist operation will be stopped (the Lane Change Assist display turns off):

- When the turn signal is operated to the opposite direction.
- When the steering wheel is operated.
- When a vehicle is detected in the target lane.
- When the lane markers are no longer detected.
- When the vehicle speed is below approximately 37 MPH (60 km/h).
- When the driver's hands are not detected on the steering wheel.
- When the ICC system/ProPILOT Assist is canceled.
- When the lane markers between both lanes are not dotted-white lines.
- When an obstacle is found near the lane marker in the direction of the target lane.

NOTE:
When the Lane Change Assist operation is stopped within the lane where the system starts to operate, the system will control the steering wheel to return the vehicle to the center of the lane.

Limitations

For system limitations, see "Limitations" (P.354).

PASSING ASSIST (ProPILOT Assist 2.1)

Basic information

Passing Assist is a feature of ProPILOT Assist 2.1. Read the entire ProPILOT Assist section before using this system, including how to operate the system and understanding the display. (See "ProPILOT Assist Systems" (P.349), "How to operate ProPILOT Assist" (P.357) and "ProPILOT Assist displays and indicators" (P.360).) Passing Assist also uses Lane Change Assist features. (See "Lane Change Assist (ProPILOT Assist 2.1)" (P.376) for details.)

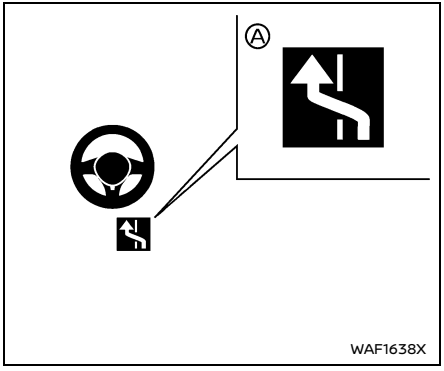

When ProPILOT Assist is active and the indicator Ⓐ is illuminated in blue, Passing Assist will help the driver to overtake a slower vehicle by:

1. Notifying the driver of slower vehicle by suggesting to pass on the left when no vehicles are detected in blind spot.

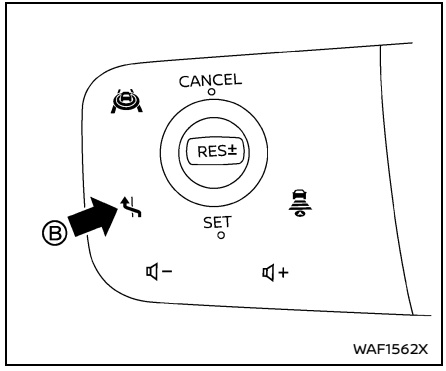

2. Assist in lane change with Lane Change Assist after the driver's acceptance by the Lane Change Assist switch Ⓑ on the steering wheel.

⚠ WARNING

Driver is responsible to move out of passing lane as laws require.

All conditions must be met in order for Passing Assist to operate:

- ProPILOT Assist must be active
- The Lane Change Assist indicator illuminates in blue (See "Lane Change Assist (ProPILOT Assist 2.1)" (P.376) for conditions)
- No vehicle is detected in the intended lane
- Lane markers are detected
- Vehicle speed is above approximately 37 MPH (60 km/h)
- Driver's hands must be detected on the steering wheel
- Passing Assist is enabled

The vehicle will suggest to pass when the slower lead vehicle is detected traveling at the following speeds:

- **Sport:**
  – 3 MPH + (5 km/h) slower
- **Standard:**
  – 6 MPH + (10 km/h) slower
- **Comfort:**
  – 9 MPH + (15 km/h) slower

When the following conditions are met, the system suggests the driver to move to the right lane.

- When your vehicle keeps traveling in the overtaking lane.
- The Lane Change Assist indicator is blue.
- When there is no vehicle in the right lane.

NOTE:
The steering operation by the driver is always prioritized.

How to enable/disable Passing Assist:
Vehicle information display
Settings → Driver Assistance →Lane Change Assist → Passing Assist → ON/OFF

How to change Passing Assist mode:
Settings → Driver Assistance → Lane Change Assist → Passing Setting → Sport/Standard/Comfort

System operation

1. When a slower vehicle is detected ahead, the message "Slow Vehicle Ahead Change Lanes Left" appears.
2. Ensure that it is safe to move into the left lane, hold the steering wheel and push the Lane Change Assist switch on the steering wheel. The turn signal starts flash immediately.
   - **If the blind spot is clear,** the vehicle will proceed to step 3.
   - **If a vehicle is detected in the blind spot,** the system will search for a space for approximately 30 seconds. If no space is created in this time, the system will cancel.
   - **If the driver's hands are not detected on the steering wheel, the system will issue a warning.** If their hands are not placed on the steering wheel in a timely manner, Lane Change Assist may cancel.
3. The Lane Change Assist display flashes green. The system starts to assist the vehicle moving into the left lane by steering control.
4. When the lane change is completed, the turn signal cancels automatically. Then Steering Assist operates again.
5. Hands off (blue) mode will resume as soon as conditions are met.

To stop Passing Assist operation:
The Passing Assist operation will be stopped (the Lane Change Assist display turns off):

- When the turn signal is operated in the opposite direction of the lane change.
- When the steering wheel is operated.
- When a vehicle is detected in the target lane after the turn signal is operated.
- When the lane markers are no longer detected.
- When the vehicle speed is below approximately 37 MPH (60 km/h).
- When the driver's hands are not detected on the steering wheel.
- When the ICC system/ProPILOT Assist is canceled.
- When the vehicle to be overtaken accelerates or changes lanes
- When an obstacle is found near the lane marker in the direction of the target lane after the turn signal is operated.

The turn signal also cancels automatically after the Passing Assist operation is stopped. When the Passing Assist operation is stopped within the lane where the system starts to operate, the system will assist the driver to return the vehicle to the center of the lane.

Limitations

For system limitations, see "Limitations" (P.354).

LICENSE INFORMATION (ProPILOT Assist 2.1)

3D HD MAP data process includes software using open source(OSS) and algorithm. The license information is printed in the web sites below.
http://www.embedded-carmultimedia.jp/RTOS/License/oss/HDL_0101/
http://www.embedded-carmultimedia.jp/RTOS/License/oss/HDL_0102/
http://www.embedded-carmultimedia.jp/RTOS/License/lib/HDL_0121/
License information of 3D HD MAP data is as follows:
TERMS OF USE OF DYNAMIC MAP PLATFORM NORTH AMERICA, INC. MATERIAL AND AGREEMENT TO END-USER SUB-LICENSE AGREEMENT
This vehicle contains data, software, Intellectual Property or a portion thereof, and Confidential Information or a portion thereof that is incorporated into the driver assistance systems of this vehicle and which is subject to a license with Dynamic Map Platform North America, Inc. (the "DMP NA Materials"). Any use of the DMP NA Materials or systems incorporating them constitute your agreement to these Terms of Use and to the terms and conditions of the End User Sub-License Agreement as fully stated on Dynamic Map Platform North America, Inc.'s ("DMP NA") website, available at www.dmp-maps.com/legal and which are expressly incorporated by reference herein. If you do not agree to these Terms of Use and to the

End User Sub-License Agreement ("license"), do not use the DMP NA Materials. The license affects your legal rights and relates to the following, among other things, your agreement to abide by the permissions and prohibitions as to the use of the DMP NA Materials; that the DMP NA Materials are provided on an AS IS basis and WITHOUT WARRANTY OF ANY KIND; DMP NA's limitations on liabilities, DMP NA's reservation of all rights in and the protection of its intellectual property and confidential information; and YOUR WAIVER OF A RIGHT TO A JURY TRIAL AND AGREEMENT TO ARBITRATE ANY CLAIMS ON THE TERMS SET FORTH IN THE LICENSE.

INTELLECTUAL PROPERTY

This product incorporates material, including Licensed Materials, Intellectual Property and/or Confidential Information, subject to a license with Dynamic Map Platform North America, Inc. (the "DMP NA Materials"). The DMP NA Materials are defined in and subject to the terms of a license agreement with Dynamic Map Platform North America, Inc. It is strictly prohibited to extract, derive, reproduce and/or transfer all or part of the DMP NA Materials, in any form and in any manner, without the prior written consent of Dynamic Map Platform North America, Inc.

©2022 Dynamic Map Platform North America, Inc. All Rights Reserved.

"DMP NA", the DMP NA logo and www.dmpmaps.com are the intellectual property of Dynamic Map Platform North America, Inc. and it reserves all rights in these marks.

©OpenStreetMap contributors, www.openstreetmap.org/copyright.

AUTOMATIC EMERGENCY BRAKING (AEB) WITH PEDESTRIAN DETECTION SYSTEM

BASIC INFORMATION

⚠ WARNING

Failure to follow the warnings and instructions for proper use of the AEB with Pedestrian Detection system could result in serious injury or death.

- **The AEB with Pedestrian Detection system is a supplemental aid to the driver. It is not a replacement for the driver's attention to traffic conditions or responsibility to drive safely. It cannot prevent accidents due to carelessness or dangerous driving techniques.**
- **The AEB with Pedestrian Detection system does not function in all driving, traffic, weather and road conditions.**

The AEB with Pedestrian Detection system can assist the driver when there is a risk of a forward collision with

- a vehicle ahead in the travelling lane
- a pedestrian ahead in the travelling lane
- a cyclist ahead in the travelling lane

Intersection Assist can assist the driver when there is a risk of a forward collision:

- When you turn right or left and cross the path of an approaching vehicle.
- When you turn right or left, a pedestrian is detected in the forward direction and is expected to enter your vehicle's path.

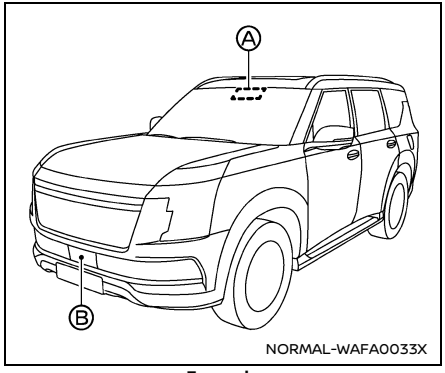

Example

The AEB with Pedestrian Detection system uses a radar sensor Ⓑ located on the front of the vehicle to measure the distance to the vehicle ahead in the same lane.

For pedestrians and cyclists, the AEB system uses a camera Ⓐ installed behind the windshield in addition to the radar sensor.

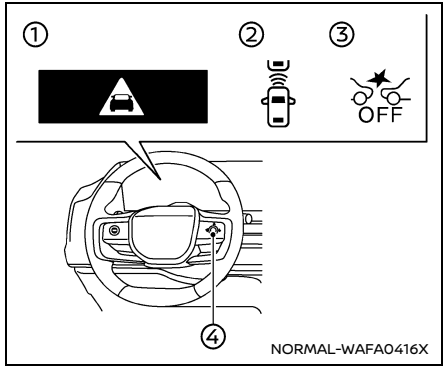

① AEB emergency warning indicator
② Vehicle ahead detection indicator (on the vehicle information display)
③ AEB system OFF warning light (on the meter panel)
④ Steering-wheel-mounted controls (right side)

AEB WITH PEDESTRIAN DETECTION SYSTEM OPERATION

The AEB with Pedestrian Detection system will function when your vehicle is driven at speeds above approximately 3 MPH (5 km/h).

For the pedestrian and cyclists detection function, the AEB with Pedestrian Detection system operates at speeds between 6 – 50 MPH (10 – 80 km/h).

If a risk of a forward collision is detected, the AEB with Pedestrian Detection system will firstly provide the warning to the driver by flashing the vehicle ahead detection indicator (yellow) in the vehicle information display and providing an audible alert. In addition, the system applies partial braking.

If the driver applies the brakes quickly and forcefully after the warning, and the AEB with Pedestrian Detection system detects that there is still the possibility of a forward collision, the system will automatically increase the braking force.

If the driver does not take action, the AEB with Pedestrian Detection system issues the second visual (flashing) (red) and audible warning. Then the system applies partial braking.

If the risk of a collision becomes imminent, the AEB with Pedestrian Detection system applies harder braking automatically.

While the AEB with Pedestrian Detection system is operating, you may hear the sound of brake operation. This is normal and indicates that the AEB with Pedestrian Detection system is operating properly.

NOTE:
The vehicle's stop lights come on when braking is performed by the AEB with Pedestrian Detection system.

Intersection Assist can operate at vehicle speeds between 6 –16 MPH (10 - 25 km/h).

The turn signal must be activated for Intersection Assist to detect an approaching vehicle. However, Intersection Assist may

detect a pedestrian without the turn signal activated.

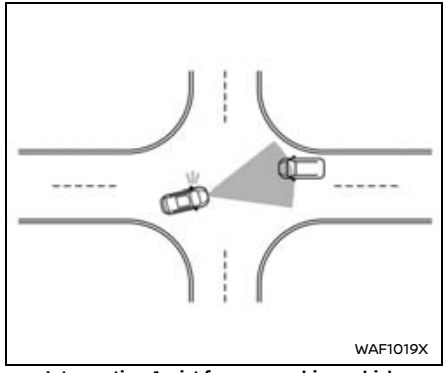

Intersection Assist for approaching vehicle

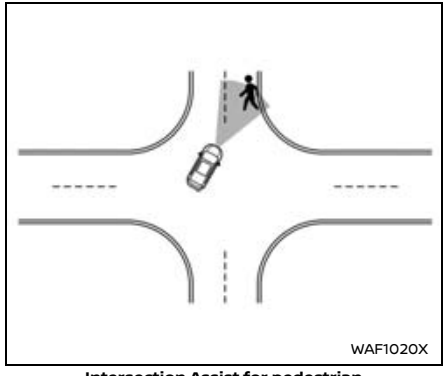

Intersection Assist for pedestrian

NOTE:

- **The vehicle's stop lights come on when braking is performed by the Intersection Assist.**
- **When the AEB with Pedestrian Detection system detects an obstacle in the path of the vehicle and displays the AEB warning, a noise may be heard from the front of the vehicle as the vehicle primes the brakes to improve response time.**

Depending on vehicle speed and distance to the vehicle, pedestrian or cyclists ahead, as well as driving and roadway conditions, the system may help the driver avoid a forward collision or may help mitigate the consequences of a collision should one be unavoidable.

If the driver is handling the steering wheel, accelerating or braking, the AEB with Pedestrian Detection system will function later or will not function.

The automatic braking will cease under the following conditions:

- When the steering wheel is turned as far as necessary to avoid a collision.
- When the accelerator pedal is depressed.
- When there is no longer a vehicle, pedestrian detected ahead.

If the AEB with Pedestrian Detection system has stopped the vehicle, the vehicle will remain at a standstill for approximately 2 seconds before the brakes are released.

When the brake pedal is depressed while the brake is applied by the system, you may feel

the pedal effort is changed and may hear a sound and vibration noise. This is normal and does not indicate a malfunction. In addition, the braking force can be increased by adding the pedal effort.

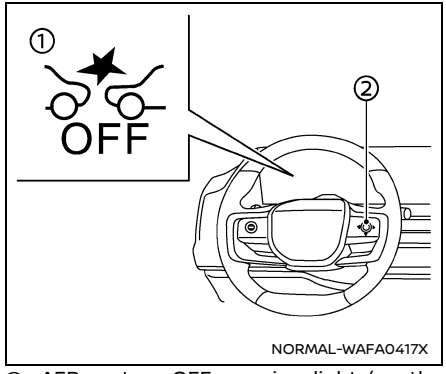

① AEB system OFF warning light (on the meter panel)
② Steering-wheel-mounted controls (right side)

TURNING THE AEB WITH PEDESTRIAN DETECTION SYSTEM ON/OFF

Perform the following steps to turn the AEB with Pedestrian Detection system on or off.

1. Push the ◀ ▶ button on the right side of the steering wheel ② until "Settings" appears in the vehicle information display and then push the scroll dial. Use the scroll dial to select "Driver Assistance." Then push the scroll dial.
2. Select "Emergency Brake" and push the scroll dial to turn the system on or off.

When the AEB with Pedestrian Detection system is turned off, the AEB system OFF warning light illuminates.

NOTE:

- **The AEB with Pedestrian Detection system will be automatically turned ON when the engine is restarted.**
- **The Intelligent Forward Collision Warning (I-FCW) system is integrated into the AEB system. There is not a separate selection for the I-FCW system. When the AEB with Pedestrian Detection system is turned off, the I-FCW system is also turned off.**
- **The AEB with Pedestrian Detection system cannot be turned on or off while driving.**

AEB WITH PEDESTRIAN DETECTION SYSTEM LIMITATIONS

⚠ WARNING

Listed below are the system limitations for the AEB with Pedestrian Detection system. Failure to operate the vehicle in accordance with these system limitations could result in serious injury or death.

- **The AEB with Pedestrian Detection system cannot detect all vehicles, pedestrians or cyclists under all conditions.**

- **The AEB with Pedestrian Detection system does not detect the following:**
  - **Pedestrians that are small (for example, children), in a sitting position, operating toys/skateboards, on scooters or in wheelchairs, or not in an upright standing or walking position.**
  - **Animals of any size.**
  - **Obstacles (for example, cargo or debris) on the roadway or roadside.**
  - **Crossing vehicles.**
  - **Vehicles where the tires are difficult to see or the shape of the rear of the vehicle is unclear or obstructed.**
  - **Parked vehicles.**
- **The AEB with Pedestrian Detection system has some performance limitations.**
  - **If a stationary vehicle is in the vehicle's path, the system will not function when the vehicle approaches the stationary vehicle at speeds over approximately 50 MPH (80 km/h).**
  - **Pedestrian and cyclist detection will not function when the vehicle is driven at speeds over approximately 50 MPH (80 km/h) or below approximately 6 MPH (10 km/h).**
- **The AEB with Pedestrian Detection system may not function properly or detect a vehicle, pedestrian or cyclist ahead in the following conditions:**
  - **In poor visibility conditions (such as rain, snow, fog, dust storms, sand storms, smoke, and road spray from other vehicles).**
  - **If dirt, ice, snow, fog or other material is covering the radar sensor area or camera area of the windshield.**
  - **If strong light (for example, sunlight or high beams) enters the front camera or a sudden change in brightness occurs (for example, entering a tunnel or driving in lightning).**
  - **In dark or dimly lit conditions, such as at night or in tunnels, including cases where your vehicle's headlights are off or dim, or the tail lights of the vehicle ahead are off.**
  - **When the direction of the camera is misaligned.**
  - **When driving on a steep downhill slope, on roads with sharp curves, and/or bumpy or dirt roads.**
  - **If there is interference by other radar sources.**
  - **When your vehicle's position or movement is changed quickly or significantly (for example, lane change, turning vehicle, abrupt steering, sudden acceleration or deceleration).**
  - **When your vehicle or the vehicle, pedestrian or cyclist ahead moves quickly or significantly such that the system cannot detect and react in time (for example, pedestrian moving quickly toward the vehicle at close range, vehicle cutting in, changing lanes, making a turn, steering abruptly, sudden acceleration or deceleration).**
  - **When the vehicle, pedestrian or cyclist is offset from the vehicle's forward path.**
  - **If the speed difference between the two vehicles is small.**
  - **The pedestrian's profile is partially obscured or unidentifiable; for example, due to transporting luggage, pushing a stroller, wearing bulky or very loose-fitting clothing or accessories, or being in a unique posture (such as raising hands).**

- **– There is poor contrast of a person to the background, such as having clothing color or pattern which is similar to the background.**
- **– When the system has never detected an obstacle since the vehicle was driven after the engine was started.**
- **– For approximately 15 seconds after starting the engine**
- **– If the vehicle ahead has a unique or unusual shape, extremely low or high clearance heights, or unusual cargo loading or is narrow (for example, a motorcycle).**
- **– When the vehicle, pedestrian or cyclist is located near a traffic sign, a reflective area (for example, water on road), or is in a shadow.**
- **– When multiple pedestrians or cyclists are grouped together.**
- **– When the view of the pedestrian or cyclist is obscured by a vehicle or other object.**
- **– While towing a trailer or other vehicle.**

- **The system performance may be degraded in the following conditions:**
  - **– The vehicle is driven on a slippery road.**
  - **– The vehicle is driven on a slope.**
  - **– Excessively heavy baggage is loaded in the rear seat or the cargo area of your vehicle.**
- **The system is designed to automatically check the sensor's (radar and camera) functionality, within certain limitations. The system may not detect some forms of obstruction of the sensor area such as ice, snow or stickers, for example. In these cases, the system may not be able to warn the driver properly. Be sure that you check, clean and clear sensor areas regularly.**
- **In some road and traffic conditions, the AEB with Pedestrian Detection system may unexpectedly apply partial braking. When acceleration is necessary, depress the accelerator pedal to override the system.**
- **The AEB with Pedestrian Detection system may operate when a pattern, object, shadow or lights are detected that are similar to the outline of vehicles, pedestrians or cyclists, or if they are the same size and position as a vehicle or motorcycle's tail lights.**
- **The system may keep operating when the vehicle ahead is turning right or left.**
- **The system may operate when your vehicle is approaching and passing a vehicle ahead.**
- **Depending on the road shape (curved road, entrance and exit of the curve, winding road, lane regulation, under construction, etc.), the system may operate temporarily for the approaching vehicle in front of your vehicle.**

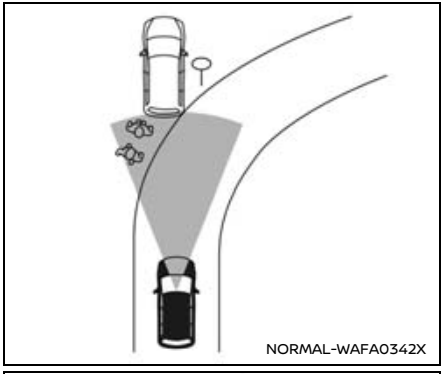

NORMAL-WAFA0342X

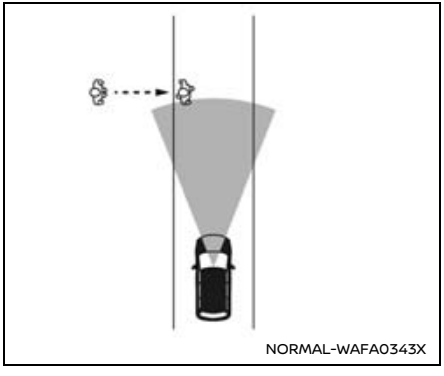

NORMAL-WAFA0343X

⚠ WARNING

- **The AEB with Pedestrian Detection system may react to:**
  - **objects on the roadside (traffic sign, guardrail, pedestrian, cyclist, motorcycle, vehicle, etc.)**
  - **pedestrians or cyclists when driving on the narrow alleys, etc.**
  - **pedestrians or cyclists who temporarily protrude into or approaching the driving lane to avoid the obstacles on the road shoulder**
  - **objects above road (low bridge, traffic sign, etc.)**
  - **objects on the road surface (railroad track, grate, steel plate, etc.)**
  - **objects in the parking garage (beam, pillar, etc.)**
  - **pedestrians, cyclists or motorcycles approaching the traveling lane**
  - **vehicles, pedestrians, cyclists, motorcycles or objects in adjacent lanes or close to the vehicle**
  - **approaching pedestrians, cyclists**
  - **objects on the road (such as trees)**
- **Braking distances increase on slippery surfaces.**
- **Excessive noise will interfere with the warning chime sound, and the chime may not be heard.**

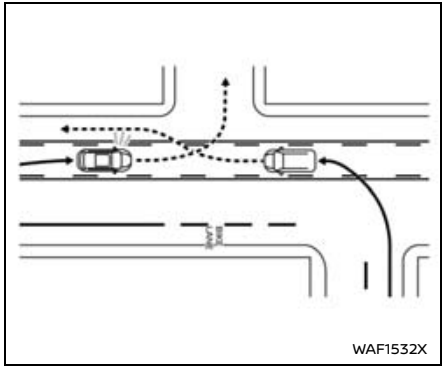

WARNING

- **Intersection Assist does not apply braking to approaching vehicles in front of your vehicle.**

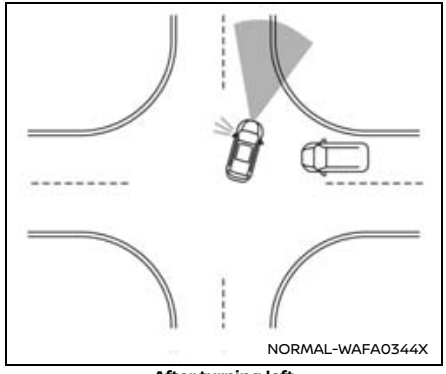

After turning left

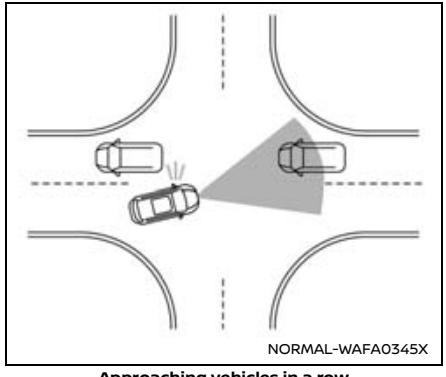

Approaching vehicles in a row

WARNING

In addition to the system limitations that apply to the AEB with Pedestrian Detection system, the following system limitations apply to the AEB with Pedestrian Detection while Intersection Assist is operating:

- **Intersection Assist may not detect an approaching vehicle or pedestrian in the following conditions:**
  - **When driving in a traffic lane separated by more than 2 lanes from approaching vehicles while making a right/left turn.**
  - **When not heading directly towards an approaching vehicle during a right/left turn.**
  - **Intersection Assist may not detect an approaching vehicle after you have already started your turn.**
  - **When turning sharply or on a very wide curve.**
  - **When the center line is not recognized by the system.**
  - **When there are a number of approaching vehicles following each other in a row.**
  - **When the lane is wider or narrower than normal.**
  - **When the center line is located close to a road marker.**

- **Intersection Assist may apply braking while making a right/left turn even if the risk of a collision is low.**
- **Intersection Assist may also apply braking when approaching vehicle movement cannot be predicted due to sudden left/right turns or deceleration of the approaching vehicles.**

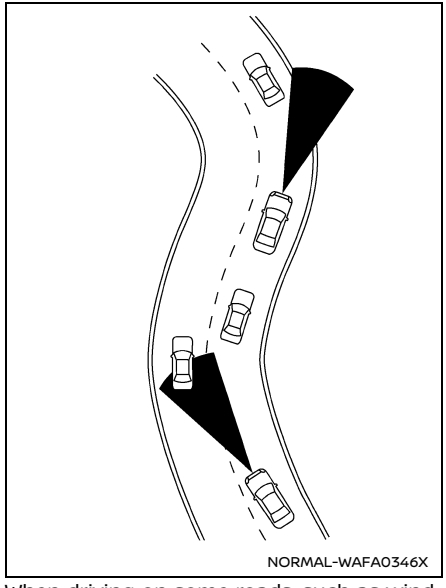
NORMAL-WAFA0346X

When driving on some roads, such as winding, hilly, curved, narrow roads, or roads which are under construction or on a slope, the sensor may detect vehicles in a different lane, or may temporarily not detect a vehicle traveling ahead. This may cause the system to work inappropriately.

The detection of vehicles may also be affected by vehicle operation (steering maneuver or traveling position in the lane, etc.) or vehicle condition. **If this occurs, the system may warn you by blinking the system indicator and sounding the chime unexpectedly. You will have to manually control the proper distance away from the vehicle traveling ahead.**

SYSTEM TEMPORARILY UNAVAILABLE

Condition A

In the following conditions, the AEB system OFF warning light will illuminate and the "Driving Aids Temporarily disabled Clean sensor area See Owner's Manual" warning message will appear in the vehicle information display. And the system will be turned off automatically.

- The camera area of the windshield is covered with moisture, snow, ice, dirt or some other object.
- The camera area of the windshield is continuously covered with dirt, etc.

Action to take:

Check that the windshield is clean and free from ice/mist in front of the camera. If necessary, operate the Max defogging/defrosting function or windshield deicer (if so equipped) to clear. This may take several minutes.

When the above conditions no longer exist, the AEB with Pedestrian Detection system will resume automatically.

Condition B

In the following conditions, the AEB system OFF warning light will illuminate and the "Driving Aids Temporarily limited Poor Visibility" warning message will appear in the vehicle information display.

- Strong light is shining onto the front of the vehicle.
- The camera area of the windshield is fogged up or covered with dirt, water, drops, ice, snow, etc. temporarily.

Action to take:

When the above conditions no longer exist, the AEB with Pedestrian Detection system will resume automatically.

Condition C

In the following condition, the AEB system OFF warning light will illuminate and the "Driving Aids temporarily limited Front Camera Too Hot" warning message will appear in the vehicle information display.

- The temperature of the front camera becomes high.

Action to take:

When the above conditions no longer exist, the AEB with Pedestrian Detection system will resume automatically.

Condition D

In the following conditions, the AEB system OFF warning light will illuminate and the "Driving Aids temporarily limited" warning message will appear in the vehicle information display.

- When the system check for the warning function did not end normally.
- When the vehicle is towed.

Action to take:

When the above conditions no longer exist, the AEB with Pedestrian Detection system will resume automatically.

Condition E

In the following condition, the AEB system OFF warning light will illuminate and the "Driving Aids Temporarily limited Radar interference" warning message will appear in the vehicle information display.

- When the radar sensor picks up interference from another radar source.

Action to take:

When the above condition no longer exists, the AEB with Pedestrian Detection system will resume automatically.

Condition F

In the following condition, the AEB system OFF warning light will illuminate and the "Driving Aids Temporarily disabled Clean sensor area See Owner's Manual" warning message will appear in the vehicle information display.

- The sensor area of the front of the vehicle is covered with dirt or is obstructed

Action to take:

If the warning message appears, stop the vehicle in a safe place and turn the engine off. Clean the radar cover on the front of the vehicle with a soft cloth, and restart the engine. If the warning message continues to appear, have the AEB with Pedestrian Detection system checked. It is recommended that you visit a NISSAN dealer for this service.

- When driving on roads with limited road structures or buildings (for example, long bridges, deserts, snow fields, driving next to long walls).

Action to take:

When the above conditions no longer exist, the AEB with Pedestrian Detection system will resume automatically.

Condition G

When the Vehicle Dynamic Control (VDC) system is OFF, the AEB brake will not operate. In this case only visible and audible warning operates. The AEB system OFF warning light (orange) will illuminate and "Limited driver's aid VDC setting OFF" warning message will appear in the vehicle information display.

Action to take:

When the VDC system is ON, the AEB with Pedestrian Detection system will resume automatically.

SYSTEM MALFUNCTION

If the AEB with Pedestrian Detection system malfunctions, it will be turned off automatically, a chime will sound, the AEB system OFF warning light (orange) will illuminate and the

"Malfunction See Owner's Manual" warning message will appear in the vehicle information display.

Action to take:

If the warning light (orange) comes on, stop the vehicle in a safe location. Turn the engine off and restart the engine. If the warning light continues to illuminate, have the AEB with Pedestrian Detection system checked. It is recommended that you visit a NISSAN dealer for this service.

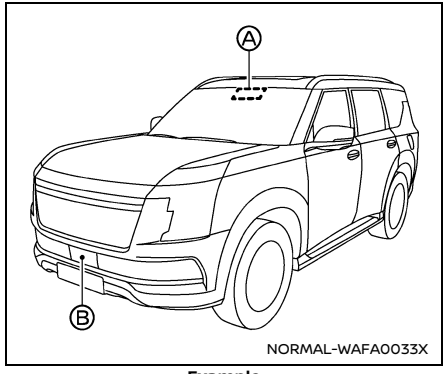

Example

SYSTEM MAINTENANCE

Basic information

The radar sensor Ⓑ is located on the front of the vehicle. The camera Ⓐ is located on the upper side of the windshield.

To keep the AEB with Pedestrian Detection system operating properly, be sure to observe the following:

- Always keep the sensor area on the front of the vehicle and windshield clean.
- Do not strike or damage the areas around the sensors (ex. bumper, windshield).
- Do not cover or attach stickers or similar objects on the front of the vehicle near the sensor area. This could cause failure or malfunction.
- Do not attach metallic objects near the radar sensor area (brush guard, etc.). This could cause failure or malfunction.
- Do not place reflective materials, such as white paper or a mirror, on the instrument panel. The reflection of sunlight may adversely affect the camera unit's detection capability.
- Do not alter, remove or paint the front of the vehicle near the sensor area. Before customizing or restoring the sensor area, it is recommended that you visit a NISSAN dealer.

Radio frequency statement

For USA

This device complies with Part 15 of the FCC Rules.

Operation is subject to the following two conditions:

1. **this device may not cause harmful interference and**
2. **this device must accept any interference received, including interference that may cause undesired operation.**

Changes or modifications made to this equipment not expressly approved by Robert Bosch GmbH may void the FCC authorization to operate the equipment.

This equipment has been tested and found to comply with the limits for a Class A digital device, pursuant to Part 15 of the FCC Rules. These limits are designed to

provide reasonable protection against harmful interference when the equipment is operated in a commercial environment. This equipment generates, uses, and can radiate radio frequency energy and, if not installed and used in accordance with the instruction manual, may cause harmful interference to radio communications. Operation of this equipment in a residential area is likely to cause harmful interference in which case the user will be required to correct the interference at his own expense.

Radio frequency radiation exposure information:

This equipment complies with FCC radiation exposure limits set forth for an uncontrolled environment. This equipment should be installed and operated with minimum distance of 20 cm between the radiator and your body.

This transmitter must not be co-located or operating in conjunction with any other antenna or transmitter.

For Canada

This device contains licence-exempt transmitter(s)/receiver(s) that comply with Innovation, Science and Economic Development Canada's licence-exempt RSS(s). Operation is subject to the following two conditions: (1) This device may not cause interference. (2) This device must accept any interference, including interference that may cause undesired operation of the device.

L'émetteur/récepteur exempt de licence contenu dans le présent appareil est conforme aux CNR d'Innovation, Sciences et Développement économique Canada applicables aux appareils radio exempts de licence. L'exploitation est autorisée aux deux conditions suivantes : 1) L'appareil ne doit pas produire de brouillage; 2) L'appareil doit accepter tout brouillage radioélectrique subi, même si le brouillage est susceptible d'en compromettre le fonctionnement.

INTELLIGENT FORWARD COLLISION WARNING (I-FCW)

BASIC INFORMATION

⚠ WARNING

Failure to follow the warnings and instructions for proper use of the I-FCW system could result in serious injury or death.

- **The I-FCW system helps warn the driver before a collision but will not avoid a collision. It is the driver's responsibility to stay alert, drive safely and be in control of the vehicle at all times.**

The I-FCW system can help alert the driver when there is a sudden braking of a second vehicle traveling in front of the vehicle ahead in the same lane.

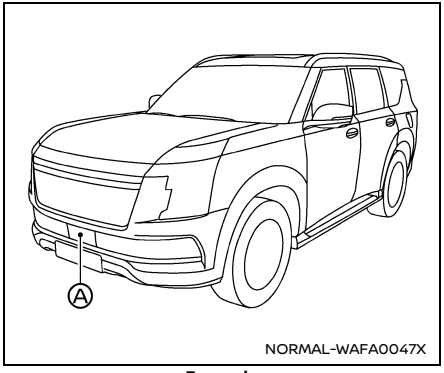

Example

The I-FCW system uses a radar sensor Ⓐ located on the front of the vehicle to measure the distance to a second vehicle ahead in the same lane.

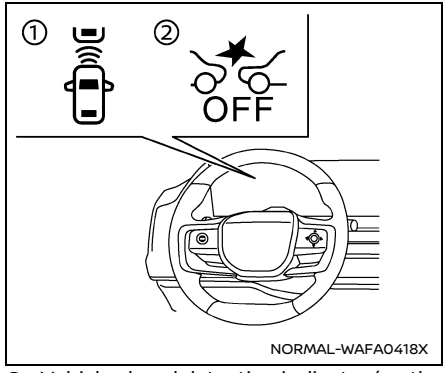

① Vehicle ahead detection indicator (on the vehicle information display)

② Automatic Emergency Braking (AEB) system OFF warning light (on the meter panel)

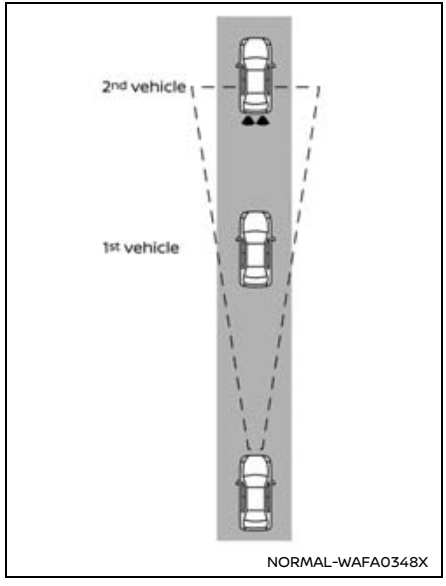

I-FCW SYSTEM OPERATION

The I-FCW system operates at speeds above approximately 3 MPH (5 km/h).

If there is a potential risk of a forward collision, the I-FCW system will warn the driver by blinking the vehicle ahead detection indicator, and sounding an audible alert.

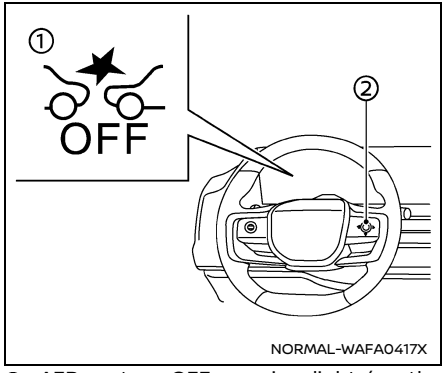

① AEB system OFF warning light (on the meter panel)
② Steering-wheel-mounted controls (right side)

TURNING THE I-FCW SYSTEM ON/OFF

Perform the following steps to turn the I-FCW system on or off.

1. Push the ◀ ▶ button on the right side of the steering wheel ② until "Settings" appears in the vehicle information display and then push the scroll dial. Use the scroll dial to select "Driver Assistance." Then push the scroll dial.
2. Select "Emergency Brake" and push the scroll dial to turn the system on or off.

When the I-FCW system is turned off, the AEB system OFF warning light (orange) illuminates.

NOTE:

- **The I-FCW system will be automatically turned on when the engine is restarted.**
- **The I-FCW system is integrated into the AEB system. There is not a separate selection for the I-FCW system. When the AEB system is turned off, the I-FCW system is also turned off.**
- **The I-FCW system cannot be turned on or off while driving.**

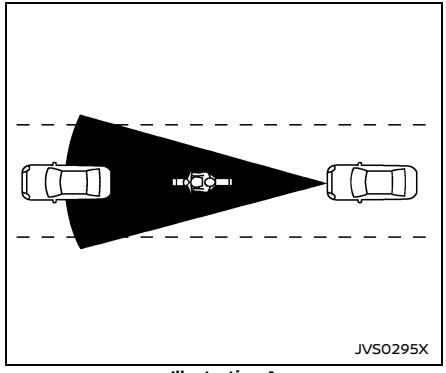

Illustration A

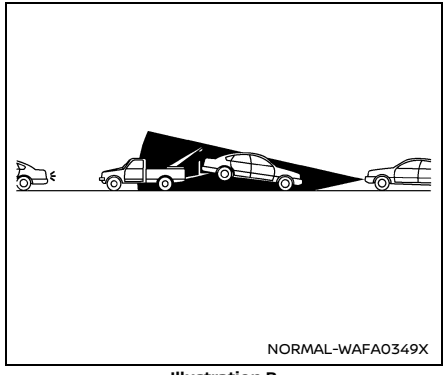

Illustration B

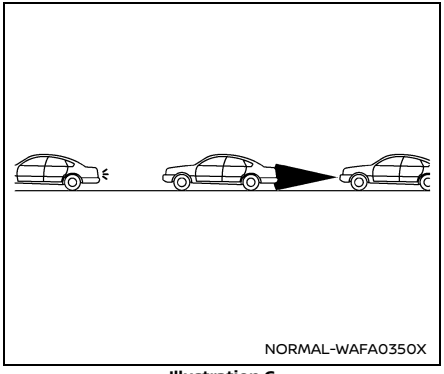

Illustration C

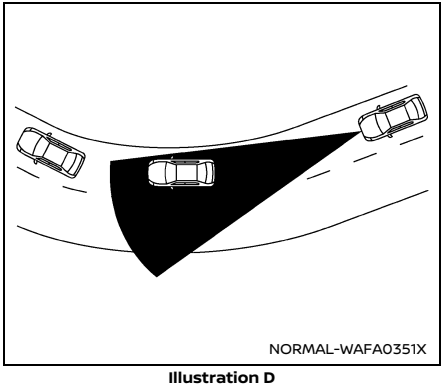

Illustration D

I-FCW SYSTEM LIMITATIONS

⚠ WARNING

Listed below are the system limitations for the I-FCW system. Failure to operate the vehicle in accordance with these system limitations could result in serious injury or death.

- **The I-FCW system cannot detect all vehicles under all conditions.**
- **The radar sensor does not detect the following objects:**
  - **Pedestrians, animals or obstacles in the roadway**
  - **Oncoming vehicles**
  - **Crossing vehicles**
- **(Illustration A) The I-FCW system does not function when a vehicle ahead is a narrow vehicle, such as a motorcycle.**
- **The radar sensor may not detect a vehicle ahead in the following conditions:**
  - **Snow or heavy rain**
  - **Dirt, ice, snow or other material covering the radar sensor**
  - **Interference by other radar sources**
  - **Snow or road spray from travelling vehicles.**
  - **Driving in a tunnel**
  - **Towing a trailer**
- **(Illustration B) When the vehicle ahead is being towed.**
- **(Illustration C) When the distance to the vehicle ahead is too close, the beam of the radar sensor is obstructed.**
- **(Illustration D) When driving on a steep downhill slope or roads with sharp curves.**
- **The system is designed to automatically check the sensor's functionality, within certain limitations. The system may not detect some forms of obstruction of the sensor area such as ice, snow, stickers, for example. In these cases, the system may not be able to warn the driver properly. Be sure that you check, clean and clear the sensor area regularly.**
- **Excessive noise will interfere with the warning chime sound, and the chime may not be heard.**

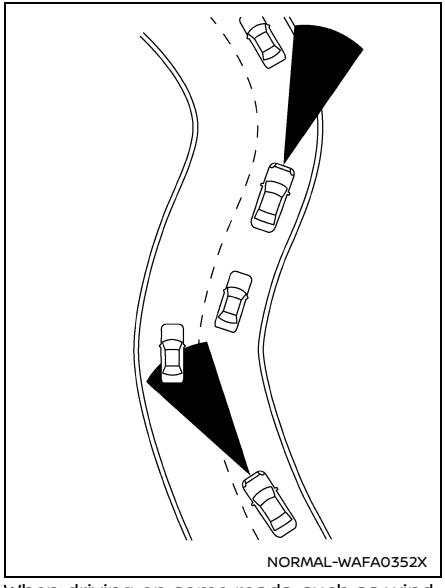
NORMAL-WAFA0352X

When driving on some roads, such as winding, hilly, curved, narrow roads, or roads which are under construction, the radar sensor may detect vehicles in a different lane, or may temporarily not detect a vehicle traveling ahead. This may cause the I-FCW system to work inappropriately.

The detection of vehicles may also be affected by vehicle operation (steering maneuver or traveling position in the lane, etc.) or vehicle condition. **If this occurs, the system may warn you by blinking the vehicle ahead detection indicator and sounding the chime unexpectedly. You will have to manually control the proper distance away from the vehicle traveling ahead.**

SYSTEM TEMPORARILY UNAVAILABLE

Condition A

When the radar sensor picks up interference from another radar source, making it impossible to detect a vehicle ahead, the I-FCW system is automatically turned off. The AEB system OFF warning light (orange) will illuminate and the "Driving Aids Temporarily limited Radar interference" warning message will appear in the vehicle information display.

Action to take:

When the above conditions no longer exist, the I-FCW system will resume automatically.

Condition B

Under the following conditions, making it impossible to detect a vehicle ahead, the I-FCW system is automatically turned off.

The AEB system OFF warning light (orange) will illuminate and the "Driving Aids Temporarily disabled Clean sensor area See Owner's Manual" warning message will appear in the vehicle information display.

- When the sensor area of the front of the vehicle is covered with dirt or is obstructed

Action to take:

If the warning light (orange) illuminates, stop the vehicle in a safe place, push the park button to engage the P (Park) position and turn the engine off. Clean the radar cover on the front of the vehicle with a soft cloth, and restart the engine. If the warning light continues to illuminate, have the I-FCW system checked. It is recommended you visit a NISSAN dealer for this service.

- When driving on roads with limited road structures or buildings (for example, long bridges, deserts, snow fields, driving next to long walls)

Action to take:

When the above conditions no longer exist, the I-FCW system will resume automatically.

SYSTEM MALFUNCTION

If the I-FCW system malfunctions, it will be turned off automatically, a chime will sound, the AEB system OFF warning light (orange) will illuminate and the "Malfunction See Owner's Manual" warning message will appear in the vehicle information display.

Action to take:

If the warning light (orange) illuminates, stop the vehicle in a safe location. Turn the engine off and restart the engine. If the warning light continues to illuminate, have the I-FCW system checked. It is recommended you visit a NISSAN dealer for this

service.

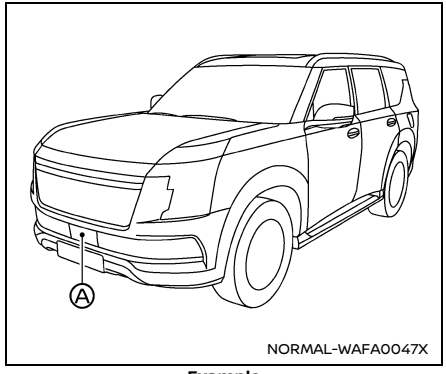

Example

SYSTEM MAINTENANCE

Basic information

The radar sensor Ⓐ is located on the front of the vehicle.

To keep the system operating properly, be sure to observe the following:

- Always keep the sensor area on the front of the vehicle clean.
- Do not strike or damage the areas around the sensor.
- Do not cover or attach stickers or similar objects on the front bumper near the sensor area. This could cause failure or malfunction.
- Do not attach metallic objects near the sensor area (brush guard, etc.). This could cause failure or malfunction.
- Do not alter, remove or paint the front bumper. It is recommended you contact a NISSAN dealer before customizing or restoring the front bumper.

Radio frequency statement

For USA

This device complies with Part 15 of the FCC Rules.

Operation is subject to the following two conditions:

1. **this device may not cause harmful interference and**
2. **this device must accept any interference received, including interference that may cause undesired operation.**

Changes or modifications made to this equipment not expressly approved by Robert Bosch GmbH may void the FCC authorization to operate the equipment.

This equipment has been tested and found to comply with the limits for a Class A digital device, pursuant to Part 15 of the FCC Rules. These limits are designed to provide reasonable protection against harmful interference when the equipment is operated in a commercial environment. This equipment generates, uses, and can radiate radio frequency energy and, if not installed and used in accordance with the instruction manual, may cause harmful interference to radio communications.

Operation of this equipment in a residential area is likely to cause harmful interference in which case the user will be required to correct the interference at his own expense.

Radio frequency radiation exposure information:

This equipment complies with FCC radiation exposure limits set forth for an uncontrolled environment. This equipment should be installed and operated with minimum distance of 20 cm between the radiator and your body.

This transmitter must not be co-located or operating in conjunction with any other antenna or transmitter.

For Canada

This device contains licence-exempt transmitter(s)/receiver(s) that comply with Innovation, Science and Economic Development Canada's licence-exempt RSS(s). Operation is subject to the following two conditions: (1) This device may not cause interference. (2) This device must accept any interference, including interference that may cause undesired operation of the device.

L'émetteur/récepteur exempt de licence contenu dans le présent appareil est conforme aux CNR d'Innovation, Sciences et Développement économique Canada applicables aux appareils radio exempts de licence. L'exploitation est autorisée aux deux conditions suivantes : 1) L'appareil ne doit pas produire de brouillage; 2) L'appareil doit accepter tout brouillage radioélectrique subi, même si le brouillage est susceptible d'en compromettre le fonctionnement.

INTELLIGENT DRIVER ALERTNESS (I-DA)

BASIC INFORMATION

⚠ WARNING

Failure to follow the warnings and instructions for proper use of the I-DA system could result in serious injury or death.

- **The I-DA system is only a warning to inform the driver of a potential lack of driver attention or drowsiness. It will not steer the vehicle or prevent loss of control.**
- **The I-DA system does not detect and provide an alert of the driver's lack of attention or fatigue in every situation.**
- **It is the driver's responsibility to:**
  - **Stay alert.**
  - **Drive safely.**
  - **Keep the vehicle in the traveling lane.**
  - **Be in control of the vehicle at all times.**
  - **Avoid driving when tired.**
  - **Avoid distractions (texting, etc.).**

The I-DA system helps alert the driver if the system detects a lack of attention or driving fatigue.

The system monitors driving style and steering behavior over a period of time, and it

detects changes from the normal pattern. If the system detects that driver attention is decreasing over a period of time, the system uses audible and visual warnings to suggest that the driver take a break.

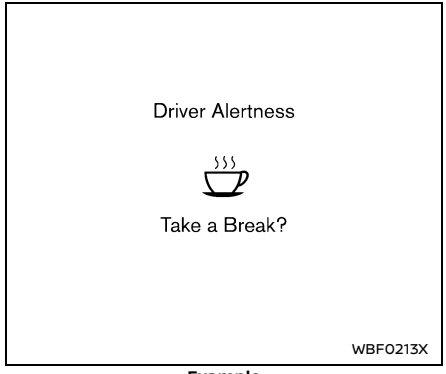

Example

I-DA SYSTEM OPERATION

If the system detects driver fatigue or that driver attention is decreasing, the message "Take a Break?" appears in the vehicle information display and a chime sounds when the vehicle is driven at speeds above 37 MPH (60 km/h).

The system continuously monitors driver attention and can provide multiple warnings per trip.

The system resets and starts reassessing driving style and steering behavior when the ignition switch is cycled from the ON to the OFF position and back to the ON position.

The system will not operate when Steering Assist system is activated.

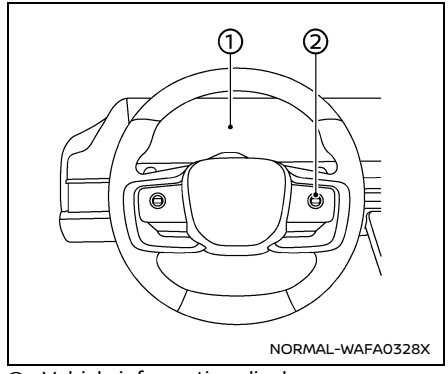

① Vehicle information display
② Steering-wheel-mounted control (right side)

HOW TO ENABLE/DISABLE THE I-DA SYSTEM

Perform the following steps to enable or disable the I-DA system.

1. Push the ◀ ▶ button on the right side of the steering wheel ② until "Settings" appears in the vehicle information display and push the scroll dial. Use the scroll dial to select "Driver Assistance." Then push the scroll dial.
2. Select "Driver Monitor", then select "Driver Alertness" and push the scroll dial.

NOTE:
The I-DA system will automatically be turned on when the engine is restarted.

I-DA SYSTEM LIMITATIONS

⚠ WARNING

Listed below are the system limitations for the I-DA system. Failure to operate the vehicle in accordance with these system limitations could result in serious injury or death.

- **The I-DA system may not operate properly and may not provide an alert in the following conditions:**
  - **Poor road conditions such as an uneven road surface or pot holes.**
  - **Strong side wind.**
  - **If you have adopted a sporty driving style with higher cornering speeds or higher rates of acceleration.**
  - **Frequent lane changes or changes to vehicle speed.**
- **The I-DA system will not provide an alert in the following conditions:**
  - **Vehicle speeds lower than 37 MPH (60 km/h).**
  - **Short lapses of attention.**
  - **Instantaneous distractions such as dropping an object.**

SYSTEM MALFUNCTION

If the I-DA system malfunctions, the "Malfunction See Owner's Manual" warning message will appear in the vehicle information display and the function will be stopped automatically.

Action to take:

Stop the vehicle in a safe location, place the vehicle in P (Park) position, turn the engine off and restart the engine. If the warning message continues to appear, have the system checked. It is recommended that you visit a NISSAN dealer for this service.

BASIC INFORMATION

⚠ WARNING

Failure to follow the warnings and instructions for proper use of the RAB system could result in serious injury or death.

- **The RAB system is a supplemental aid to the driver. It is not a replacement for proper driving procedures. Always use the side and rear mirrors and turn and look in the direction you will move before and while backing up. Never rely solely on the RAB system. It is the driver's responsibility to stay alert, drive safely, and be in control of the vehicle at all times.**
- **There is a limitation to the RAB system capability. The RAB system is not effective in all situations.**

The RAB system can assist the driver when backing up and approaching an object directly behind the vehicle. If an item is detected, and the driver fails to stop, this feature can automatically engage the brakes to help avoid a rear collision or help lessen the severity of an impact.

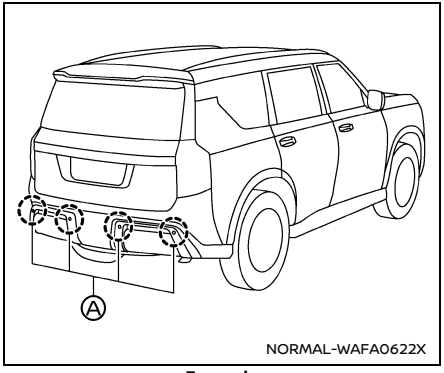

Example

The RAB system detects obstacles behind the vehicle using the sonar sensors Ⓐ (4 or 6, depending on the model) located on the rear bumper.

NOTE:

You can temporarily cancel the RAB system by touching the RAB temporary ON/OFF key on the touch screen display. For additional information, see "How to temporarily cancel the RAB system" (P.402).

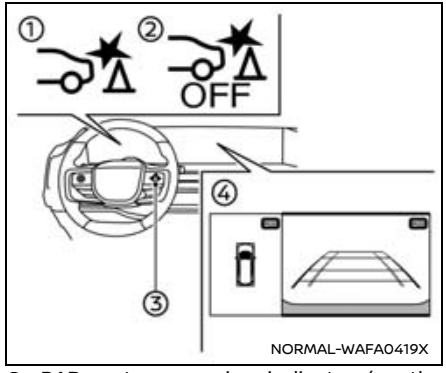

① RAB system warning indicator (on the vehicle information display)
② RAB system OFF warning light (on the meter panel)
③ Steering-wheel-mounted controls (right side)
④ Touch screen display

RAB SYSTEM OPERATION

When the shift button is in the R (Reverse) position and the vehicle speed is less than approximately 9 MPH (15 km/h), the RAB system operates.

If a risk of a collision with an obstacle is detected when your vehicle is backing up, the RAB system warning indicator will flash in the vehicle information display, a red frame will appear in the touch screen display (models with the Intelligent Around View® Monitor system), and the system will chime three times. The system will then automatically apply the brakes. After the automatic brake application, the driver must depress the brake pedal to maintain brake pressure.

NOTE:

- **The stop lights of the vehicle come on when braking is performed by the RAB system.**
- **When the brakes operate, a noise may be heard. This is not a malfunction.**

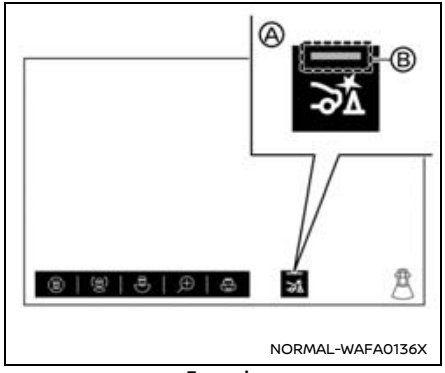

Example

HOW TO TEMPORARILY CANCEL THE RAB SYSTEM

The RAB system can be temporarily turned on/off by touching the RAB temporary ON/OFF key Ⓐ on the touch screen display. When the RAB system is on, the indicator Ⓑ illuminates.

However, when the TOW mode (if so equipped) is selected or the trailer BSW function is activated, the RAB system cannot be turned on.

NOTE:

- **The indicator Ⓑ will turn off and a warning message will be displayed only when the customer turns off the RAB system intentionally. If the RAB system is disabled due to a system malfunction or deactivation of the Vehicle Dynamic Control (VDC) system, the indicator Ⓑ will not turn off and no warning message will be displayed.**
- **The RAB system will be temporarily turned off when the TOW mode is selected by the Drive Mode Selector or the trailer BSW function is activated. For additional information, see "Drive Mode Selector (if so equipped)" (P.312) or "Trailer BSW function operation" (P.330).**
- **The RAB system will be automatically turned on when the engine is restarted (when the trailer BSW function has not been activated).**

RAB SYSTEM LIMITATIONS

⚠ WARNING

Listed below are the system limitations for the RAB system. Failure to follow the warnings and instructions for proper use of the RAB system could result in serious injury or death.

- **When the vehicle approaches an obstacle while the accelerator or brake pedal is depressed, the function may not operate or the start of the operation may be delayed. The RAB system may not operate or may not perform sufficiently due to vehicle conditions, driving conditions, the traffic environment, the weather, road surface conditions, etc. Do not wait for the system to operate. Operate the brake pedal by yourself as soon as necessary.**
- **If it is necessary to override RAB operation, strongly press the accelerator pedal.**
- **Always check your surroundings and turn to check what is behind you before and while backing up. The RAB system detects stationary objects behind the vehicle. The RAB system does not detect the following objects:**
  - **Moving objects**
  - **Low objects**
  - **Narrow objects**
  - **Wedge-shaped objects**
  - **Complex-shaped objects**
  - **Multiple object in close**
  - **Objects close to the bumper (less than approximately 1 ft [30 cm])**
  - **Objects that suddenly appear**

  - Thin objects such as rope, wire, chain, etc.
- The RAB system may not operate for pedestrians or animals.
- The RAB system may not operate for the following obstacles:
  - Obstacles located high off the ground
  - Obstacles in a position offset from your vehicle
  - Obstacles, such as spongy materials or snow, that have soft outer surfaces and can easily absorb a sound wave
- The RAB system may not operate in the following conditions:
  - There is rain, snow, ice, dirt, etc., attached to the sonar sensors.
  - A loud sound is heard in the area around the vehicle.
  - The surface of the obstacle is diagonal to the rear of the vehicle.
  - The sonar sensors or the area around them are extremely hot or cold.
- The RAB system may unintentionally operate in the following conditions:
  - There is overgrown grass in the area around the vehicle.
  - There is a structure (e.g., a wall, toll gate equipment, a narrow tunnel, a parking lot gate) near the side of the vehicle.
  - There are bumps, protrusions, or manhole covers on the road surface.
  - The vehicle is driving through a draped flag or a curtain.
  - The vehicle is approaching a high curb or car stop.
  - The vehicle is driving on a steep hill.
  - There is an accumulation of snow or ice behind the vehicle.
  - An ultrasonic wave source, such as another vehicle's sonar, is near the vehicle.
- Once the automatic brake control operates, it does not operate again if the vehicle approaches the same obstacle.
- The automatic brake control can only operate for a short period of time. Therefore, the driver must depress the brake pedal.
- In the following situations, the RAB system may not operate properly or may not function sufficiently:
  - The vehicle is driven in bad weather (rain, fog, snow, etc.).
  - The vehicle is driven on a steep hill.
  - The vehicle's posture is changed (e.g., when driving over a bump).
  - The vehicle is driven on a slippery road.
  - The vehicle is turned sharply by turning the steering wheel fully.
  - Snow chains are used.
  - Wheels or tires other than NISSAN recommended are used.
  - The brakes are cold at low ambient temperatures or immediately after driving has started.
  - The braking force becomes poor due to wet brakes after driving through a puddle or washing the vehicle.
- Turn the RAB system off in the following conditions to prevent the occurrence of an unexpected activation resulting from sudden system operation:
  - The vehicle is towed.
  - The vehicle is carried on a flatbed truck.
  - The vehicle is on the chassis dynamometer.
  - The vehicle drives on an uneven road surface.
  - The vehicle is towing an object.

  - **Suspension parts other than those designated as genuine parts are used. (If the vehicle height or the vehicle body inclination is changed, the system may not detect an obstacle correctly.)**
  - **If the vehicle is using an accessory like a bike rack or cargo carrier that blocks the sensors.**
- **When towing a trailer or other vehicle, turn the RAB system off to prevent the occurrence of an unexpected accident resulting from sudden system operation.**
- **When the TOW mode (if so equipped) is selected, the RAB system is automatically disabled.**
- **When the trailer BSW function is enabled, RAB is automatically disabled. "Rear Driving Aids Unavailable Towing Assist Activated" message is displayed.**
- **Excessive noise (e.g., audio system volume, an open vehicle window) will interfere with the chime sound, and it may not be heard.**

SYSTEM TEMPORARILY UNAVAILABLE

Condition A:

When the Vehicle Dynamic Control (VDC) system is OFF, the RAB system OFF warning light will illuminate.

Action to take:

When the VDC system is ON, the RAB system will resume automatically.

Condition B:

When the TOW mode (if so equipped) or the trailer BSW function is activated, the "Rear Driving Aids Unavailable Towing Assist Activated" message is displayed on the vehicle information display, the RAB system OFF warning light illuminates and the RAB system will be temporarily unavailable.

Action to take:

When the TOW mode is selected or the trailer BSW function is deactivated, the RAB system will resume automatically.

See "Drive Mode Selector (if so equipped)" (P.312) and "Trailer BSW function operation" (P.330).

SYSTEM MALFUNCTION

Basic information

If the RAB system malfunctions, it will be turned off automatically, a beep sounds and the RAB system OFF warning light will illuminate, and the “Malfunction See Owner’s Manual” warning message will appear in the vehicle information display.

Action to take

If the warning light illuminates, park the vehicle in a safe location, turn the engine off, and restart the engine. If the warning light continues to illuminate, have the RAB system checked. It is recommended that you visit a NISSAN dealer for this service.

NOTE:

If the RAB system cannot be operated temporarily, the RAB system OFF warning light blinks.

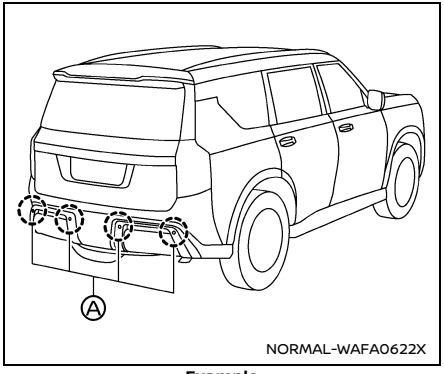

Example

SYSTEM MAINTENANCE

The sonar sensors Ⓐ (4 or 6, depending on the model) are located on the rear bumper. Observe the following items to ensure proper operation of the system:

- Always keep the sonar sensors clean.
- If the sonar sensors are dirty, wipe them off with a soft cloth while being careful to not damage them.
- The sonar sensors may be blocked by temporary ambient conditions such as splashing water, mist or fog. The blocked condition may also be caused by ice, frost, snow or dirt obstructing the sonar sensors. Check for and remove objects obstructing the area around the sonar sensors.
- Do not subject the area around the sonar sensors to strong impact. Also, do not remove or disassemble the sonar sensors. If the sonar sensors and peripheral areas are deformed in an accident, etc., have the sonar sensors checked. It is recommended that you visit a NISSAN dealer for this service.
- Do not attach stickers (including transparent material), install accessories or apply additional paint on the sonar sensors and their surrounding areas. This may cause a malfunction or improper operation.
- When washing the vehicle using a high-pressure washer, do not apply direct washer pressure on the sonar sensors. This may cause a malfunction of the sonar sensors.

⚠ CAUTION

During the first 1,200 miles (2,000 km), follow these recommendations to obtain maximum engine performance and ensure the future reliability and economy of your new vehicle. Failure to follow these recommendations may result in shortened engine life and reduced engine performance.

- Avoid driving for long periods at constant speed, either fast or slow. Do not run the engine over 4,000 rpm.
- Do not accelerate at full throttle in any gear.
- Avoid quick starts.
- Avoid hard braking as much as possible.
- Do not tow a trailer for the first 500 miles (800 km). Your engine, axle or other parts could be damaged.

FUEL EFFICIENT DRIVING TIPS

Follow these easy-to-use Fuel Efficient Driving Tips to help you achieve the most fuel economy from your vehicle.

1. Use smooth accelerator and brake pedal application.
   - Avoid rapid starts and stops.
   - Use smooth, gentle accelerator and brake application whenever possible.
   - Maintain constant speed while commuting and coast whenever possible.
2. Maintain constant speed.
   - Look ahead to try and anticipate and minimize stops.
   - Synchronizing your speed with traffic lights allows you to reduce your number of stops.
   - Maintaining a steady speed can minimize red light stops and improve fuel efficiency.
3. Use air conditioning (A/C) at higher vehicle speeds.
   - Below 40 MPH (64 km/h), it is more efficient to open windows to cool the vehicle due to reduced engine load.
   - Above 40 MPH (64 km/h), it is more efficient to use A/C to cool the vehicle due to increased aerodynamic drag.
   - Recirculating the cool air in the cabin when the A/C is on reduces cooling load.
4. Drive at economical speeds and distances.
   - Observing the speed limit and not exceeding 60 MPH (97 km/h) (where legally allowed) can improve fuel efficiency due to reduced aerodynamic drag.
   - Maintaining a safe following distance behind other vehicles reduces unnecessary braking.
   - Safely monitoring traffic to anticipate changes in speed permits reduced braking and smooth acceleration changes.
   - Select a gear range suitable to road conditions.
5. Use cruise control.
   - Using cruise control during highway driving helps maintain a steady speed.
   - Cruise control is particularly effective in providing fuel savings when driving on flat terrains.
6. Plan for the shortest route.
   - Utilize a map or navigation system to determine the best route to save time.
7. Avoid idling.
   - Shutting off your engine when safe for stops exceeding 30-60 seconds saves fuel and reduces emissions.
8. Buy an automated pass for toll roads.
   - Automated passes permit drivers to use special lanes to maintain cruising speed through the toll and avoid stopping and starting.
9. Winter warm up.
   - Limit idling time to minimize impact to fuel economy.
   - Vehicles typically need no more than 30 seconds of idling at start-up to effectively circulate the engine oil before driving.
   - Your vehicle will reach its ideal operating temperature more quickly while driving versus idling.
10. Keeping your vehicle cool.
    - Park your vehicle in a covered parking area or in the shade whenever possible.
    - When entering a hot vehicle, opening the windows will help to reduce the inside temperature faster, resulting in reduced demand on your A/C system.

INCREASING FUEL ECONOMY

- Keep your engine tuned up.
- Follow the recommended scheduled maintenance.
- Keep the tires inflated to the correct pressure. Low tire pressure increases tire wear and lowers fuel economy.
- Keep the wheels in correct alignment. Improper alignment increases tire wear and lowers fuel economy.
- Use the recommended viscosity engine oil. (See "Engine oil and oil filter recommendation" (P.526).)

NISSAN ALL-MODE 4WD® (if so equipped)

BASIC INFORMATION

⚠ WARNING

- **Do not attempt to raise two wheels off the ground and shift the transmission to any drive or reverse position with the engine running. Doing so may result in drivetrain damage or unexpected vehicle movement which could result in serious vehicle damage or personal injury.**
- **Do not attempt to test a 4WD equipped vehicle on a 2-wheel dynamometer or similar equipment even if the other two wheels are raised off the ground. Make sure you inform test facility personnel that your vehicle is equipped with 4WD before it is placed on a dynamometer. Using the wrong test equipment may result in drivetrain damage or unexpected vehicle movement which could result in serious vehicle damage or personal injury.**

⚠ CAUTION

- **Do not drive the vehicle in the 4H or 4L position on dry hard surface roads. Driving on dry, hard surfaces in 4H or 4L (if so equipped) may cause unnecessary noise, tire wear and increased fuel consumption.**

  If the Four-Wheel Drive (4WD) warning message is displayed when driving on dry hard surface roads:

  - **in the 4H position, shift the 4WD shift switch to AUTO. On the other hand, when fail-safe is operating, it keeps 4H even on paved roads.**
  - **in the 4L position (if so equipped), stop the vehicle and shift the transmission to the "N" (Neutral) position with the brake pedal depressed and shift the 4WD shift switch to AUTO. On the other hand, when fail-safe is operating, it keeps 4L even on paved roads.**

  If the 4WD warning message is still displayed after the above operation, have your vehicle checked as soon as possible. It is recommended you contact a NISSAN dealer for this service.
- **The transfer case may be damaged if you continue driving with the 4WD warning message displayed.**

- **When the battery is disconnected, the 4WD position may be changed from 4L (if so equipped) to AUTO. After reconnecting the battery and if the alternating blinking of the 4WD shift indicator "AUTO" and "4L" changes to the blinking of "AUTO", depress the brake pedal and select the shift N (Neutral). The "AUTO" will stop blinking.**

See "On-pavement and off-road driving precautions" (P.293) for other precautions for off-road driving.

NISSAN ALL-MODE 4WD® SYSTEM

The NISSAN All-Mode 4WD system provides multiple positions (AUTO, 4H and 4L (if so equipped)), so you can select the desired drive mode according to the driving conditions.

4WD shift procedure:

You can select the desired position by pushing the relevant switch on the instrument panel. There are 2 or 3 types of 4WD modes available, AUTO, 4H and 4L (if so equipped).

The 4WD positions (AUTO, 4H and 4L (if so equipped)) are linked to the Drive Mode Selector (if so equipped). When "SPORT" or "ECO" mode is selected in the Drive Mode Selector, you cannot select 4H and 4L position in the 4WD system. When "SAND", "ROCK or "MUD/RUT" mode is selected in the Drive Mode Selector, you cannot select AUTO position in the 4WD system.

See "Drive Mode Selector (if so equipped)" (P.312) for details of the Drive Mode Selector.

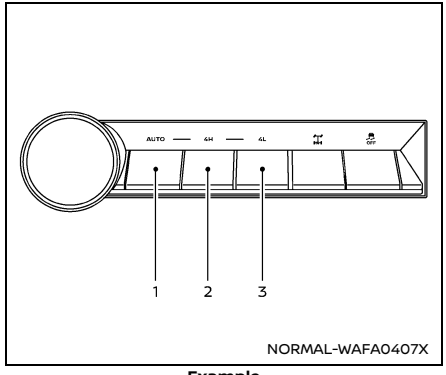

Example

1. AUTO (4WD AUTO)
   Available Drive Mode (if so equipped): STANDARD, SPORT, SNOW, TOW or ECO (see "Drive Mode Selector (if so equipped)" (P.312))
   Wheels driven: Rear wheels or 4 wheels
   Conditions of use: For driving on paved or slippery roads
   Shift procedure:
   (4H to AUTO)
   When the vehicle is driving straight, push AUTO switch.
   (4L (if so equipped) to AUTO)
   Stop the vehicle and select the shift position N (Neutral), then push AUTO switch while depressing the foot brake pedal.

2. 4H
   Available Drive Mode (if so equipped): ROCK, SAND, MUD/RUT, SNOW, TOW or STANDARD (see "Drive Mode Selector (if so equipped)" (P.312))
   Wheels driven: 4 wheels
   Conditions of use: For driving on rocky, sandy or snow-covered roads
   Shift procedure:
   (AUTO to 4H)
   When the vehicle is driving straight, push 4H switch.
   (4L (if so equipped) to 4H)
   Stop the vehicle and select the shift position N (Neutral), then push 4H switch while depressing the foot brake pedal.
3. 4L (if so equipped)
   Available Drive Mode: SNOW, TOW, ROCK, SAND, MUD/RUT or STANDARD (see "Drive Mode Selector (if so equipped)" (P.312))
   Wheels driven: 4 wheels
   Conditions of use: For use when the maximum power and traction is required (for example, on steep grades or rocky, sandy or muddy roads).
   Shift procedure: Stop the vehicle and select the shift position N (Neutral), then push 4L switch while depressing the foot brake pedal.

The 4WD shift switch electronically controls the transfer case operation. Push the switch to move between each mode, AUTO, 4H and 4L (if so equipped).

You must depress the 4WD shift switch to select 4L (if so equipped), and the vehicle MUST be stationary, the shift position in the N (Neutral) position and depressing the foot brake pedal when changing into or out of 4L.

⚠ WARNING

- **When parking, apply the parking brake before stopping the engine and make sure that the 4WD shift indicator is on and the ATP warning message "AWD error Apply parking brake" is not displayed. Otherwise, the vehicle could unexpectedly move even if the automatic transmission is in the P (Park) position.**
- **The Four-Wheel Drive (4WD) shift indicators must stop blinking and remain illuminated or turn off before shifting the transmission into gear. If the shift position is shifted from the N (Neutral) position to any other gear while the Four-Wheel Drive (4WD) shift indicator is blinking, the vehicle may move unexpectedly.**

⚠ CAUTION

- **Never shift the 4WD shift switch between 4L (if so equipped) and 4H/AUTO while driving.**
- **The 4H position provides greater traction. Avoid excessive speed, as it will cause increased fuel consumption and higher oil temperatures, and could damage drivetrain component. Speeds over 62 MPH (100 km/h) in 4H is not recommended.**
- **The 4L position (if so equipped) provides maximum traction. Avoid raising vehicle speed excessively, as the maximum speed is approximately 31 MPH (50 km/h).**
- **When driving straight, shift the 4WD shift switch to the AUTO or 4H position. Do not move the 4WD shift switch when making a turn or reversing.**
- **Do not shift the 4WD shift switch (between AUTO and 4H) while driving on steep downhill grades. Use the engine brake and low transmission gears for engine braking.**
- **Do not operate the 4WD shift switch (between AUTO and 4H) with the rear wheels spinning.**
- **Do not drive on dry hard surface roads in the 4H or 4L (if so equipped) position. Driving on dry hard surfaces in 4H or 4L may cause unnecessary noise and tire wear. NISSAN recommends driving in the AUTO position under these conditions.**

- **The 4WD transfer case may not be shifted between 4H/AUTO and 4L (if so equipped) at low ambient temperatures and the 4L position indicator may blink even when the 4WD shift switch is shifted. After driving for a while you can change the 4WD shift switch between 4H/AUTO and 4L.**

When driving on rough roads,
- Drive carefully according to the road surface conditions.

When the vehicle is stuck,
- Place stones or wooden blocks under the tires to free the vehicle.
- Set the 4WD shift switch to 4H or 4L (if so equipped).
- If it is difficult to free the vehicle, repeat forward and backward movement to increase the movement.
- If the vehicle is stuck deep in mud, tire chains may be effective.

⚠ CAUTION

- **Do not spin the tires excessively. Tires will sink deep into the mud, making it difficult to free the vehicle.**
- **Avoid shifting gears with the engine running at high speeds as this may cause malfunction.**

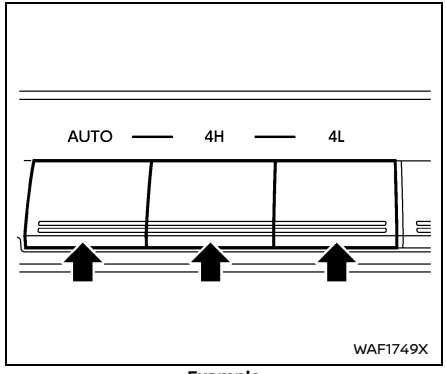

Example

4WD SHIFT SWITCH

- Shift the 4WD shift switch to either the AUTO, 4H or 4L (if so equipped) position, depending on driving conditions.
- With the AUTO switch selected, distribution of torque to the front and rear wheels changes automatically, depending on road conditions encountered [ratio; 0 : 100 (2WD) → 50 : 50 (4WD)]. This results in improved driving stability.
- **When the vehicle is stopped after making a turn, you may feel a slight jolt after the shift position is shifted to N (Neutral) or P (Park) position. This occurs because the transfer clutch is released and not because of a malfunction.**

⚠ CAUTION

- **When driving straight, shift the 4WD shift switch to the AUTO or 4H position. Do not move the 4WD shift switch when making a turn or reversing.**
- **Do not shift the 4WD shift switch while driving on steep downhill grades. Use the engine brake and low transmission gears for engine braking.**
- **If the 4WD shift switch is operated while making a turn, accelerating or decelerating or if the ignition switch is placed in the OFF position while in the AUTO, 4H or 4L (if so equipped), you may feel a jolt. This is not a malfunction.**
- **Do not operate the 4WD shift switch with the rear wheels spinning.**
- **Before placing the 4WD shift switch in the 4H position from AUTO, ensure the vehicle speed is less than 62 MPH (100 km/h). Failure to do so can damage the 4WD system.**
- **Never shift the 4WD shift switch between 4L (if so equipped) and 4H/AUTO while driving.**
- **Engine idling speed is high while warming up the engine. Be especially careful when starting or driving on slippery surfaces with the 4WD shift switch in AUTO.**

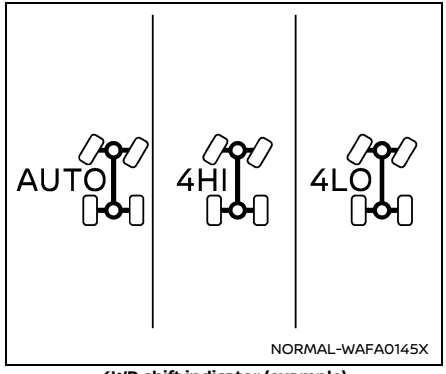

4WD shift indicator (example)

4WD SHIFT INDICATOR

The 4WD shift indicator is displayed in the vehicle information display.

While the engine is running, the 4WD shift indicator will illuminate the position selected by the 4WD shift switch. (See the 4WD shift procedure shown in the "NISSAN All-Mode 4WD® system" (P.408).)

- **The 4WD shift indicator may blink while shifting from one 4WD mode to the other. When the shifting is completed, the 4WD shift indicator will come on. If the indicator does not come on immediately, make sure the area around the vehicle is safe, and drive the vehicle straight, accelerate or decelerate or move the vehicle in reverse, then shift the 4WD shift switch.**
- **If the 4WD warning message is displayed, the 4WD shift indicator may turn off.**

4WD WARNING MESSAGE

Depending on the conditions, a warning message may be displayed on the vehicle information display.

See "Vehicle information display warnings and indicators" (P.121) for examples.

⚠ CAUTION

- **If any 4WD warning message continues to be displayed, have your vehicle checked by a NISSAN dealer as soon as possible.**
- **Shifting between 4H/AUTO and 4L (if so equipped) is not recommended when the 4WD warning message displayed.**
- **When the 4WD warning message displayed, the 2WD mode may be engaged even if the 4WD shift switch is in AUTO or 4H. Be especially careful when driving. If corresponding parts are malfunctioning, the 4WD mode will not be engaged even if the 4WD shift switch is shifted.**
- **Do not drive the vehicle in the 4H or 4L (if so equipped) position on dry hard surface roads. Driving on dry, hard surfaces in 4H or 4L may cause unnecessary noise, tire wear and increased fuel consumption.**

  If the Four-Wheel Drive (4WD) warning message is displayed when driving on dry hard surface roads:

  - **in the 4H position, shift the 4WD shift switch to AUTO. On the other hand, when fail-safe is operating, it keeps 4H even on paved roads.**
  - **in the 4L position (if so equipped), stop the vehicle and shift the transmission to the N (Neutral) position with the brake pedal depressed and shift the 4WD shift switch to AUTO. On the other hand, when fail-safe is operating, it keeps 4L even on paved roads.**
- **If the 4WD warning message is still displayed after the above operation, have your vehicle checked as soon as possible. It is recommended you contact a NISSAN dealer for this service.**
- **The transfer case may be damaged if you continue driving with the 4WD warning message displayed.**

4WD MODE OF INTELLIGENT AROUND VIEW® MONITOR (if so equipped)

While the transmission is not in the R (Reverse) position, when the "4H" or "4L" (if so equipped) is selected, the Invisible Hood View will automatically be displayed.

See "4WD mode (if so equipped)" (P.250) for more details.

REAR DIFFERENTIAL LOCK SYSTEM (if so equipped)

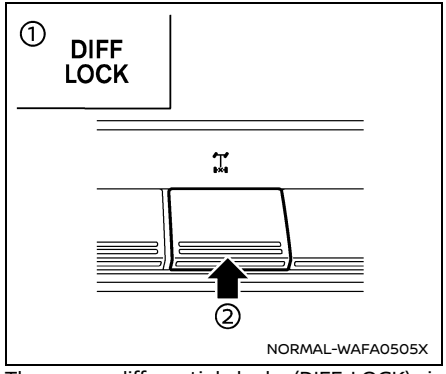

The rear differential lock (DIFF-LOCK) is designed to transmit engine power to the left and right wheels equally.

If your vehicle is stuck in sand, snow, mud, etc. or one wheel is off the ground and the rear differential lock is not on, engine power is transmitted to one wheel causing it to spin, so leaving insufficient traction on the other wheel. The rear differential lock allows the left and right wheels to rotate as a unit, enabling your vehicle to free itself.

Differential lock indicator light:

The status of the rear differential lock system can be checked with the differential lock indicator light ① in the meter.

- Indicator light on steady: Gear is completely locked
- Indicator light flashing: Gear is not locked, or in standby
- Indicator light off: Gear is not locked (system is off)

How to operate the system:

To lock the rear differential gear, reduce the vehicle speed below 4 MPH (7 km/h) and turn the 4WD shift switch to the 4L position. Then push the differential lock mode switch ② to the "ON" position. The differential lock indicator light will flash and then stay on when the rear differential gear is completely locked.

How to engage the rear differential lock:

If the differential lock indicator light continues to flash, move the vehicle forward and backward while turning the steering wheel left and right. The rear differential lock will be engaged and the differential lock indicator light will stay on.

How to disengage the rear differential lock:

After using the rear differential lock, or during normal driving, push the differential lock mode switch to the "OFF" position. The differential lock indicator light will turn off after the rear differential lock is released.

If the differential lock indicator light remains on after pushing the differential lock mode switch, the system is not turned off. In this case, move the vehicle forward and backward slowly while turning the steering wheel left and right. The rear differential lock will be disengaged and the differential lock indicator light will turn off.

- **The rear differential lock system operates only when the engine is running.**

- **The rear differential lock system operates only when the 4L mode is selected.**
  - **In 4WD AUTO or 4H mode, the rear differential lock system does not operate when the differential lock mode switch is pushed. The differential lock indicator light will continue to flash and the rear differential gear will not be locked.**
  - **If the 4WD mode is changed from 4L to 4WD AUTO or 4H with the differential lock mode switch on, the rear differential lock system does not operate and the differential lock indicator light will flash. Push the differential lock mode switch to turn the rear differential lock system off. The differential lock indicator light will turn off.**

⚠ WARNING

- **Use the rear differential lock system only in an emergency when it is not possible to free a stuck vehicle even when using the 4L position.**
- **When the rear differential lock system is in operation, turning the vehicle becomes difficult. This can be dangerous, especially at high speeds. Doing so could damage the powertrain system parts.**
- **While the rear differential lock system is on, the Anti-lock Braking System (ABS) warning light illuminates. This indicates that anti-lock function may not fully operate.**
- **Do not operate the rear differential lock system when the vehicle is turning or when one side wheel is rotating. Otherwise the powertrain system parts could be damaged.**
- **Avoid quick starts while the rear differential lock system is in operation. Otherwise the powertrain system parts could be damaged.**

Observe the above precautions. Otherwise, loss of normal steering control may occur, which may result in an accident and serious injury or death.

AIR SUSPENSION SYSTEM (if so equipped)

BASIC INFORMATION

The air suspension system controls the vehicle height in accordance with the driving situations and the driver's preferences.

The basic vehicle height is "NORMAL", and can be adjusted to 3 other vehicle heights.

- "HIGH" vehicle height helps improved off-road driving performance.
- "AERO" vehicle height helps improved fuel efficiency when driving at high speeds.
- "ACCESS" vehicle height improves the ease of getting on and out of the vehicle as well as the loading and unloading of cargo.

Even if the number of passengers or load capacity changes, the vehicle height will be automatically adjusted to the set vehicle height.

NOTE:

- **A noise may be generated when the vehicle height is changing. This does not indicate a malfunction.**
- **A noise may be heard from the vehicle brake parts when the vehicle height is changing while brake is applied. This does not indicate a malfunction.**

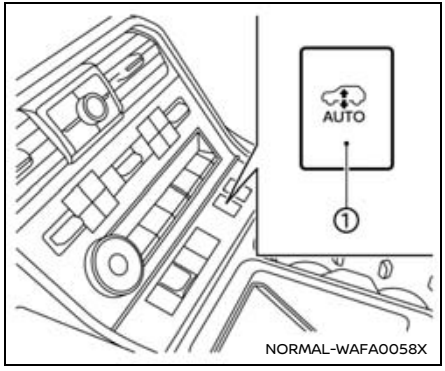

NORMAL-WAFA0058X

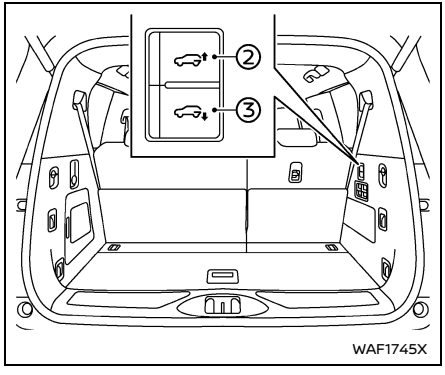

WAF1745X

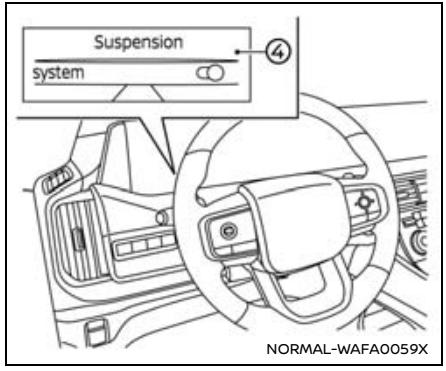

NORMAL-WAFA0059X

① AUTO switch
② Height level control up switch
③ Height level control down switch
④ Vehicle information display menu

OPERATION CONDITION OF THE AIR SUSPENSION SYSTEM

The air suspension system can be operated when all of the following conditions are met.

- The engine is running.
- The doors are closed.
- The air suspension system is turned on in the vehicle information display (see "Maintenance" (P.118)).

SWITCHES

Basic information

These switches can be used to select the air suspension modes or vehicle heights.

⚠ CAUTION

Before you operate the AUTO switch or height level control up/down switch to change the vehicle height, always check the vehicle surroundings to be sure that there is no object or person.

AUTO switch

When the AUTO switch is turned ON by pushing and holding the switch for approximately 1 second, the vehicle height is automatically controlled in accordance with the vehicle speed, the transmission position, 4WD mode (if so equipped) (see "NISSAN All-Mode 4WD® (if so equipped)" (P.407)) and the drive mode (see "Drive Mode Selector (if so equipped)" (P.312)).

- At vehicle speeds above approximately 56 MPH (90 km/h), the vehicle height is lowered to improve aerodynamics ("AERO" position). When the vehicle speed decreases to less than approximately 43 MPH (70 km/h), the vehicle height returns to the "NORMAL" position.
- When the transmission is in the P (Park) position, the vehicle height will automat-

ically be lowered to the “ACCESS” position when the 4WD position "AUTO" is selected (if so equipped). See "NISSAN All-Mode 4WD® (if so equipped)" (P.407). When the 4WD mode is 4H or 4L, the vehicle height automatically changes to the "NORMAL" position.

- When the SNOW, ROCK, SAND, MUD/RUT mode (if so equipped) is selected by the drive mode selector and the 4WD mode (if so equipped) is 4H or 4L, the vehicle height is automatically changed to the “NORMAL” position when the vehicle speed exceeds about 12 MPH (20 km/h). When the speed is reduced to an extremely low speed, the height automatically changes to the "HIGH" position.
- When the STANDARD mode is selected by the drive mode selector and the 4WD mode (if so equipped) is 4L, the vehicle height is automatically changed to the "NORMAL" position when the vehicle speed exceeds about 12 MPH (20 km/h). When the speed is reduced to an extremely low speed, the height automatically changes to the "HIGH" position.

Height level control up/down switches

On condition that the transmission is in the P (Park) position, when you push the height level control down switch, the vehicle height will automatically be lowered to the "ACCESS" position.

When you push the height level control up switch, the vehicle height will automatically be raised to the "NORMAL" position.

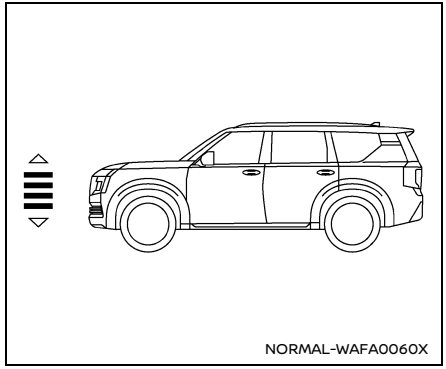

HIGH level

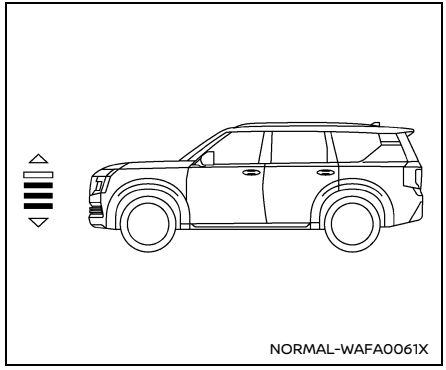

NORMAL level

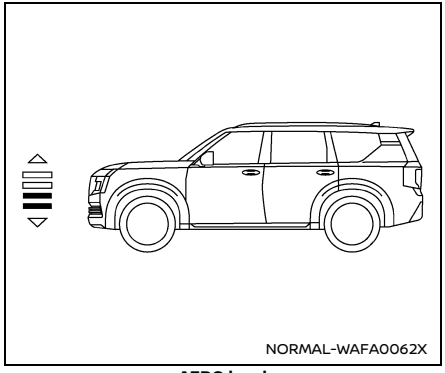

AERO level

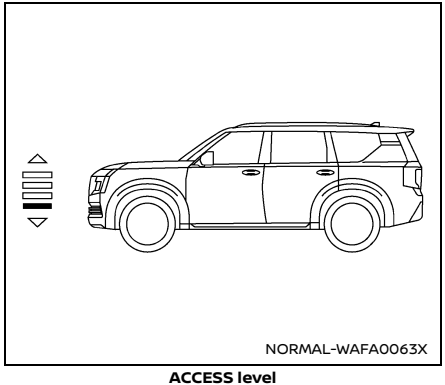

ACCESS level

VEHICLE HEIGHT LEVEL

See "Height Control display (if so equipped)" (P.138) for the vehicle information display at each level.

MODES AND DISPLAY INDICATORS

AUTO mode



This indicator is displayed when the AUTO switch is selected.

Keep normal mode



This indicator is displayed if no switch is selected.

If the air suspension system has been turned off in the vehicle information display, no indicator is displayed (see "Maintenance" (P.118)).

TURNING OFF THE AIR SUSPENSION SYSTEM

The air suspension system can be turned off by using the vehicle information display (see "Maintenance" (P.118)).

When the air suspension system is OFF, the vehicle height will not be automatically adjusted.

However, the system will turn ON automatically when the vehicle is driven.

AIR SUSPENSION SYSTEM TEMPORARILY UNAVAILABLE

If the air suspension system is temporarily unavailable, some warning messages will be displayed in the vehicle information display. In this case, please follow the instructions on the message. Below are some examples:

- "Vehicle height too high Reduce speed"
- "Vehicle height too low Reduce speed"
- "Height control suspended Close doors to resume"
- "Selected height unavailable, payload capacity exceeded"
- "Height control suspended Please wait for system to cool"
- "Height control suspended Close vehicle hood to resume"
- "Height control suspended Temporarily unavailable"

NOTE:

- **If frequent height changes occur, the message "Height control suspended Please wait for system to cool" will be displayed. For example, when:**
  - **the air suspension switches are pushed frequently.**
  - **the transmission position is changed frequently between P (Park) and R (Reverse), N (Neutral) or D (Drive)/M (Manual shift mode).**

– selecting a drive mode and a 4WD mode (if so equipped) which allow for high position during city driving.

This does not indicate a malfunction.

- **The air suspension system will be temporarily suspended during a low-voltage condition, or engine-off condition. "Height control suspended Temporarily unavailable" will appear when the air suspension system is turned on. In this case, start the engine or charge the battery. This does not indicate a malfunction.**
- **If the warning message continues to appear, have the system checked. It is recommended that you visit a NISSAN dealer for this service.**

AIR SUSPENSION SYSTEM MALFUNCTION

If the air suspension system malfunctions, it will be turned off automatically and the "Suspension malfunction Please steer carefully Visit dealer" warning message will appear in the vehicle information display.

If the air suspension system malfunctions, the vehicle height will be maintained on the "NORMAL" position or the vehicle height at the time of malfunction.

Action to take:

If the warning message appears, pull off the road at a safe location and stop the vehicle. Turn the engine off and restart the engine. If the warning message continues to appear, have the system checked. It is recommended that you visit a NISSAN dealer for this service.

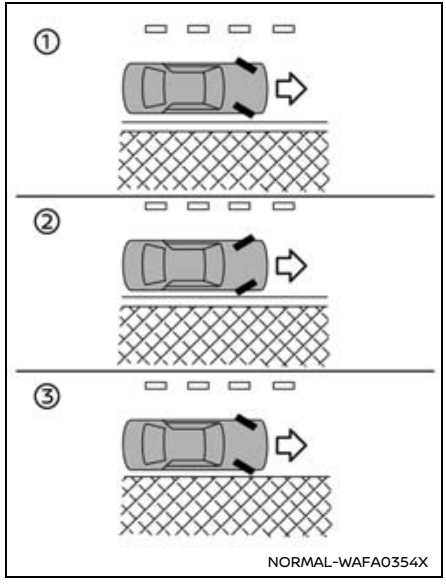

NORMAL-WAFA0354X

⚠ WARNING

- **Do not stop or park the vehicle over flammable materials such as dry grass, waste paper or rags. They may ignite and cause a fire.**
- **Never leave the engine running while the vehicle is unattended.**

- **Do not leave children unattended inside the vehicle. They could unknowingly activate switches or controls. Unattended children could become involved in serious accidents.**
- **To help avoid risk of injury or death through unintended operation of the vehicle and/or its systems, do not leave children, people who require the assistance of others or pets unattended in your vehicle. Additionally, the temperature inside a closed vehicle on a warm day can quickly become high enough to cause a significant risk of injury or death to people and pets.**
- **Safe parking procedures require that both the parking brake be applied and the transmission placed into P (Park). Failure to do so could cause the vehicle to move unexpectedly or roll away and result in an accident.**
- **Make sure the transmission cannot be shifted without depressing the foot brake pedal.**

1. Apply the parking brake.
2. Push the park button to shift to the P (Park) position.
3. To help prevent the vehicle from rolling into the street when parked on a sloping drive way, it is a good practice to turn the wheels as illustrated.
   - HEADED DOWNHILL WITH CURB: ①
     Turn the wheels into the curb and move the vehicle forward until the curb side wheel gently touches the curb.
   - HEADED UPHILL WITH CURB: ②
     Turn the wheels away from the curb and move the vehicle back until the curb side wheel gently touches the curb.
   - HEADED UPHILL OR DOWNHILL, NO CURB: ③
     Turn the wheels toward the side of the road so the vehicle will move away from the center of the road if it moves.
4. Place the ignition switch in the OFF position.

NOTE:
Use the Idling Stop System when the vehicle is stopped for a period of time, for example waiting at stoplights. Stop the engine with the ignition switch when parking, etc. for an extended period of time.

⚠ WARNING

- **If the engine is not running or is turned off while driving, the power assist for the steering will not work. Steering will be harder to operate.**
- **When the electric power steering warning light illuminates with the engine running, the power assist for the steering will cease operation. You will still have control of the vehicle but the steering will be harder to operate.**

The electric power steering is designed to provide power assist while driving to operate the steering wheel with light force.

When SPORT mode is selected (if so equipped), the steering wheel effort is moderately increased for a sporty feel. (See "SPORT mode" (P.314).)

When the steering wheel is operated repeatedly or continuously while parking or driving at a very low speed, the power assist for the steering wheel will be reduced. This is to prevent overheating of the electric power steering and protect it from getting damaged. While the power assist is reduced, steering wheel operation will become heavy. When the temperature of the electric power steering goes down, the power assist level will return to normal. Avoid repeating such steering wheel operations that could cause the electric power steering to overheat.

You may hear a noise when the steering wheel is operated quickly. However, this is not a malfunction.

If the electric power steering warning light illuminates while the engine is running, it may indicate the electric power steering is not functioning properly and may need servicing. Have the electric power steering checked. It is recommended that you visit a NISSAN dealer for this service. (See "Electric power steering warning light (red)" (P.103) or "Electric power steering warning light (yellow)" (P.106), depending on the lit color.)

When the electric power steering warning light illuminates with the engine running, the power assist for the steering will cease operation. You will still have control of the vehicle. However, greater steering effort is needed, especially in sharp turns and at low speeds.

BRAKING PRECAUTIONS

Basic information

The brake system has two separate hydraulic circuits. If one circuit malfunctions, you will still have braking at two wheels.

Hydraulically-assisted brakes

The hydraulically-assisted brake system is designed to drive the hydraulic pump and the braking force is electrically assisted. When you depress the brake pedal, you may hear a sound of the motor operating. This is due to pressure building up in the accumulator and does not indicate any malfunction.

Using the brakes

Avoid resting your foot on the brake pedal while driving. This will cause overheating of the brakes, wearing out the brake pads faster and reduce gas mileage.

To help reduce brake wear and to prevent the brakes from overheating, reduce speed and downshift to a lower gear before going down a slope or long grade. Overheated brakes may reduce braking performance and could result in loss of vehicle control.

⚠ WARNING

- **While driving on a slippery surface, be careful when braking, accelerating or downshifting. Abrupt braking or accelerating could cause the wheels to skid and result in an accident.**
- **If the engine is not running or is turned off while driving, the power assist for the brakes will not work. Braking will be harder.**

Wet brakes

When the vehicle is washed or driven through water, the brakes may get wet. As a result, your braking distance will be longer and the vehicle may pull to one side during braking.

To dry brakes, drive the vehicle at a safe speed while lightly tapping the brake pedal to heat-up the brakes. Do this until the brakes return to normal. Avoid driving the vehicle at high speeds until the brakes function correctly.

Parking brake break-in

Break in the parking brake pads whenever the stopping effect of the parking brake is weakened or whenever the parking brake pads and/or calipers/rotors are replaced, in order to assure the best braking performance.

This procedure is described in the vehicle service manual. It is recommended you visit a NISSAN dealer for this service.

BRAKE ASSIST

When the force applied to the brake pedal exceeds a certain level, the Brake Assist is activated generating greater braking force than a conventional brake booster even with light pedal force.

⚠ WARNING

The Brake Assist is only an aid to assist braking operation and is not a collision warning or avoidance device. It is the driver's responsibility to stay alert, drive safely and be in control of the vehicle at all times.

ANTI-LOCK BRAKING SYSTEM (ABS)

Basic information

⚠ WARNING

- **The Anti-lock Braking System (ABS) is a sophisticated device, but it cannot prevent accidents resulting from careless or dangerous driving techniques. It can help maintain vehicle control during braking on slippery surfaces. Remember that stopping distances on slippery surfaces will be longer than on normal surfaces even with ABS. Stopping distances may also be longer on rough, gravel or snow covered roads, or if you are using tire chains. Always maintain a safe distance from the vehicle in front of you. Ultimately, the driver is responsible for safety.**
- **Tire type and condition may also affect braking effectiveness.**
  - **When replacing tires, install the specified size of tires on all four wheels.**
  - **When installing a spare tire, make sure that it is the proper size and type as specified on the Tire and Loading Information label. See "Tire and loading information label" (P.531) of this manual.**

– For detailed information, see "Wheels and tires" (P.490) of this manual.

The Anti-lock Braking System (ABS) controls the brakes so the wheels do not lock during hard braking or when braking on slippery surfaces. The system detects the rotation speed at each wheel and varies the brake fluid pressure to prevent each wheel from locking and sliding. By preventing each wheel from locking, the system helps the driver maintain steering control and helps to minimize swerving and spinning on slippery surfaces.

Using the system

Depress the brake pedal and hold it down. Depress the brake pedal with firm steady pressure, but do not pump the brakes. The ABS will operate to prevent the wheels from locking up. Steer the vehicle to avoid obstacles.

⚠ WARNING

Do not pump the brake pedal. Doing so may result in increased stopping distances.

Self-test feature

The ABS includes electronic sensors, electric pumps, hydraulic solenoids and a computer. The computer has a built-in diagnostic feature that tests the system each time you start the engine and move the vehicle at a low speed in forward or reverse. When the self-test occurs, you may hear a “clunk” noise and/or feel a pulsation in the brake pedal. This is normal and does not indicate a malfunction. If the computer senses a malfunction, it switches the ABS off and illuminates the ABS warning light on the instrument panel. The brake system then operates normally, but without anti-lock assistance.

If the ABS warning light illuminates during the self-test or while driving, have the vehicle checked. It is recommended you visit a NISSAN dealer for this service.

Normal operation

The ABS operates at speeds above 3 to 6 MPH (5 to 10 km/h). The speed varies according to road conditions.

When the ABS senses that one or more wheels are close to locking up, the actuator rapidly applies and releases hydraulic pressure. This action is similar to pumping the brakes very quickly. You may feel a pulsation in the brake pedal and hear a noise from under the hood or feel a vibration from the actuator when it is operating. This is normal and indicates that the ABS is operating properly. However, the pulsation may indicate that road conditions are hazardous and extra care is required while driving.

SECONDARY COLLISION MITIGATION BRAKING (SCMB)

Basic information

⚠ WARNING

- **Never rely solely on the SCMB system. The system is designed to help mitigate the possible damage due to the secondary collision, and is not effective in all situations. It is the driver’s responsibility to stay alert, drive safely, and be in control of the vehicle at all times.**
- **SCMB system will not activate if the Vehicle Dynamics Control (VDC) system is damaged during the accident.**
- **System will automatically turn off after a set duration, following the initiation of the function.**

Secondary Collision Mitigation Braking (SCMB) system controls the brake automatically in the event of an accident where the supplemental air bag system detected a collision. This feature is designed to mitigate the risk of a subsequent collision.

System operation

SCMB starts to operate when the supplemental air bag system is deployed. The system applies brake to slow down the vehicle

and bring it to a standstill.
The system stops operating when the vehicle is stationary.
SCMB is overridden in the following situations:

- When the accelerator pedal is depressed over a specified threshold.
- When the brake pedal is depressed over a specified threshold (where the driver demands greater braking force).

If a malfunction occurs in the system, a message will be displayed in the vehicle information display. See "Secondary Collision Mitigation Braking malfunction warning" (P.135).

VEHICLE DYNAMIC CONTROL (VDC) SYSTEM

BASIC INFORMATION

The Vehicle Dynamic Control (VDC) system uses various sensors to monitor driver inputs and vehicle motion. Under certain driving conditions, the VDC system helps to perform the following functions.

- Controls brake pressure to reduce wheel slip on one slipping drive wheel so power is transferred to a non slipping drive wheel on the same axle.
- Controls brake pressure and engine output to reduce drive wheel slip based on vehicle speed (traction control function).
- Controls brake pressure at individual wheels and engine output to help the driver maintain control of the vehicle in the following conditions:
  - understeer (vehicle tends to not follow the steered path despite increased steering input)
  - oversteer (vehicle tends to spin due to certain road or driving conditions).

The VDC system can help the driver to maintain control of the vehicle, but it cannot prevent loss of vehicle control in all driving situations.
When the VDC system operates, the slip indicator light in the instrument panel flashes so note the following:

- The road may be slippery or the system may determine some action is required to help keep the vehicle on the steered path.
- You may feel a pulsation in the brake pedal and hear a noise or vibration from under the hood. This is normal and indicates that the VDC system is working properly.
- Adjust your speed and driving to the road conditions.

If a malfunction occurs in the system, the slip indicator light illuminates in the instrument panel. The VDC system automatically turns off.
The VDC OFF switch is used to turn off the VDC system. The VDC off indicator illuminates to indicate the VDC system is off. When the VDC system is turned off, the VDC system still operates to prevent one drive wheel from slipping by transferring power to a non slipping drive wheel. The slip indicator light flashes if this occurs. All other VDC functions are off, and the slip indicator light will not flash. The VDC system is automatically reset to on when the ignition switch is placed in the off position then back to the on position.
See "Slip indicator light" (P.109) and "Vehicle Dynamic Control (VDC) off indicator light" (P.109).
The computer has a built-in diagnostic feature that tests the system each time you start the engine and move the vehicle forward or in reverse at a slow speed. When the self-test occurs, you may hear a "clunk" noise and/or feel a pulsation in the brake pedal. This is normal and is not an indication of a malfunction.

VDC operation is reduced when the Drive Mode Selector is used to select the SAND mode (if so equipped), ROCK mode (if so equipped) or MUD/RUT mode (if so equipped) (see "Drive Mode Selector (if so equipped)" (P.312)). The VDC system may not operate in the same circumstances when compared to operation in the STANDARD mode. To help prevent accidents, drive carefully, avoid careless or dangerous driving techniques and be especially careful when driving and cornering on slippery surfaces. For safe driving operation, push the VDC OFF switch and turn on the VDC system as soon as possible.

⚠ WARNING

- **The VDC system is designed to help improve driving stability but does not prevent accidents due to abrupt steering operation at high speeds or by careless or dangerous driving techniques. Reduce vehicle speed and be especially careful when driving and cornering on slippery surfaces and always drive carefully.**
- **Do not modify the vehicle's suspension. If suspension parts such as shock absorbers, struts, springs, stabilizer bars, bushings and wheels are not NISSAN recommended for your vehicle or are extremely deteriorated, the VDC system may not operate properly. This could adversely affect vehicle handling performance, and the slip indicator light may illuminate.**
- **If brake related parts such as brake pads, rotors and calipers are not NISSAN recommended or are extremely deteriorated, the VDC system may not operate properly and the slip indicator light may illuminate.**
- **If engine control related parts are not NISSAN recommended or are extremely deteriorated, the slip indicator light may illuminate.**
- **When driving on extremely inclined surfaces such as higher banked corners, the VDC system may not operate properly and the slip indicator light may illuminate. Do not drive on these types of roads.**
- **When driving on an unstable surface such as a turntable, ferry, elevator or ramp, the slip indicator light may illuminate. This is not a malfunction. Restart the engine after driving onto a stable surface.**
- **If wheels or tires other than the NISSAN recommended ones are used, the VDC system may not operate properly and the slip indicator light may illuminate.**
- **The VDC system is not a substitute for winter tires or tire chains on a snow covered road.**

HOW TO TURN OFF THE VDC SYSTEM

The vehicle should be driven with the Vehicle Dynamic Control (VDC) system ON for most driving conditions.

When the vehicle is stuck in mud or snow, the VDC system reduces the engine output to reduce wheel spin. The engine speed will be reduced even if the accelerator is depressed to the floor. If maximum engine power is needed to free a stuck vehicle, turn the VDC system off.

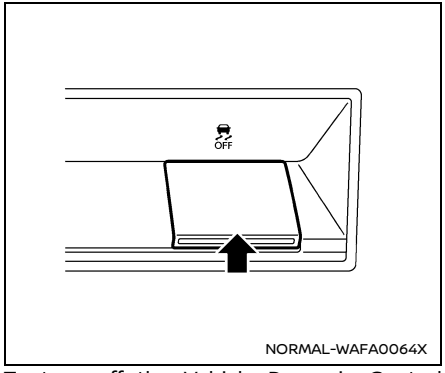

To turn off the Vehicle Dynamic Control (VDC) system, push and hold the VDC OFF switch. The VDC off indicator light will illuminate.

Push the VDC OFF switch again or restart the engine to turn ON the system.

BRAKE FORCE DISTRIBUTION

During braking while driving through turns, the system optimizes the distribution of force to each of the four wheels depending on the radius of the turn.

⚠ WARNING

- **The VDC system is designed to help the driver maintain stability but does not prevent accidents due to abrupt steering operation at high speeds or by careless or dangerous driving techniques. Reduce vehicle speed and be especially careful when driving and cornering on slippery surfaces and always drive carefully.**
- **Do not modify the vehicle's suspension. If suspension parts such as shock absorbers, struts, springs, stabilizer bars, bushings and wheels are not NISSAN recommended for your vehicle or are extremely deteriorated, the VDC system may not operate properly. This could adversely affect vehicle handling performance, and the indicator light may flash or both the and indicator lights may illuminate.**
- **If brake related parts such as brake pads, rotors and calipers are not NISSAN recommended or are extremely deteriorated, the VDC system may not operate properly and both the and indicator lights may illuminate.**
- **If engine control related parts are not NISSAN recommended or are extremely deteriorated, both the and indicator lights may illuminate.**
- **When driving on extremely inclined surfaces such as higher banked corners, the VDC system may not operate properly and the indicator light may flash or both the and indicator lights may illuminate. Do not drive on these types of roads.**
- **When driving on an unstable surface such as a turntable, ferry, elevator or ramp, the indicator light may flash or both the and indicator lights may illuminate. This is not a malfunction. Restart the engine after driving onto a stable surface.**
- **If wheels or tires other than the NISSAN recommended ones are used, the VDC system may not operate properly and the indicator light may flash or both the and indicator lights may illuminate.**
- **The VDC system is not a substitute for winter tires or tire chains on a snow covered road.**

CHASSIS CONTROL

BASIC INFORMATION

The chassis control is an electric control module that includes the following function:

- Intelligent Trace Control

INTELLIGENT TRACE CONTROL

This system senses driving based on the driver's steering and acceleration/braking patterns, and controls brake pressure at individual wheels to aid tracing at corners and help smooth vehicle response.

The Intelligent Trace Control can be set to ON (enabled) or OFF (disabled) using the "Driver Assistance" settings in the vehicle information display. (See "Settings" (P.113).)

Amount of brake control is changed depending on the mode selected by the Drive Mode Selector (if so equipped). When the VDC system is turned off, the Intelligent Trace Control is also turned off.

When the Intelligent Trace Control is not functioning properly, the master warning light illuminates, and the warning message "Chassis Control System Error" will also appear in the vehicle information display.

If the chassis control warning message appears in the vehicle information display, it may indicate that the Intelligent Trace Control is not functioning properly. Have the system checked as soon as possible. It is recommended that you visit a NISSAN dealer for this service. (See "Chassis Control System Error: See Owner's Manual warning" (P.126).)

⚠ WARNING

The Intelligent Trace Control may not be effective depending on the driving condition. Always drive carefully and attentively.

When the Intelligent Trace Control is operating, you may feel a pulsation in the brake pedal and hear a noise. This is normal and indicates that the Intelligent Trace Control is operating properly. You may also feel deceleration when the Intelligent Trace Control is operating. However, this is not a malfunction.

HILL START ASSIST SYSTEM

⚠ WARNING

- **Never rely solely on the hill start assist system to prevent the vehicle from moving backward on a hill. Always drive carefully and attentively. Depress the brake pedal when the vehicle is stopped on a steep hill. Be especially careful when stopped on a hill on frozen or muddy roads. Failure to prevent the vehicle from rolling backwards may result in a loss of control of the vehicle and possible serious injury or death.**
- **The hill start assist system is not designed to hold the vehicle at a standstill on a hill. Depress the brake pedal when the vehicle is stopped on a steep hill. Failure to do so may cause the vehicle to roll backwards and may result in a collision or serious personal injury.**
- **The hill start assist system may not prevent the vehicle from rolling backwards on a hill under all load or road conditions. Always be prepared to depress the brake pedal to prevent the vehicle from rolling backwards. Failure to do so may result in a collision or serious personal injury.**

The hill start assist system automatically

keeps the brakes applied to help prevent the vehicle from rolling backwards in the time it takes the driver to release the brake pedal and apply the accelerator when the vehicle is stopped on a hill.

The hill start assist system will operate automatically under the following conditions:

- The transmission is shifted to a forward or reverse gear.
- The vehicle is stopped completely on a hill by applying the brake.

The maximum holding time is 2 seconds. After 2 seconds the vehicle will begin to roll back and the hill start assist system will stop operating completely.

The hill start assist system will not operate when the transmission is shifted to the N (Neutral) or P (Park) position or on a flat and level road.

When the slip indicator light illuminates in the meter, the hill start assist system will not operate. (See "Slip indicator light" (P.109).)

HILL DESCENT CONTROL SYSTEM (if so equipped)

BASIC INFORMATION

⚠ WARNING

- **Never rely solely on the hill descent control system to control vehicle speed when driving on steep downhill grades. Always drive carefully when using the hill descent control system and decelerate the vehicle speed by depressing the brake pedal if necessary. Be especially careful when driving on frozen, muddy or extremely steep downhill roads. Failure to control vehicle speed may result in a loss of control of the vehicle and possible serious injury or death.**
- **The hill descent control system may not control the vehicle speed on a hill under all load or road conditions. Always be prepared to depress the brake pedal to control vehicle speed. Failure to do so may result in a collision or serious personal injury.**

⚠ CAUTION

When the hill descent control system operates continuously for a long time, the temperature of the Vehicle Dynamic Control (VDC) system actuator may increase and the hill descent control system may be temporarily disabled (the hill descent control system on indicator light will blink). If the indicator light does not come on continuously after blinking, stop using the system.

When the hill descent control system is activated, it automatically applies smooth brakes to control speed on a steep and slippery descent or off the road without brake or accelerator operation.

The hill descent control system helps maintain vehicle speed when driving under 20 MPH (30 km/h) on a steep descent that engine braking alone in Four-Wheel Drive (4WD) mode cannot control the speed.

When driving forward on the descent, the speed can be adjusted by the brake or accelerator operation. The system maintains the speed for reverse driving on the descent.

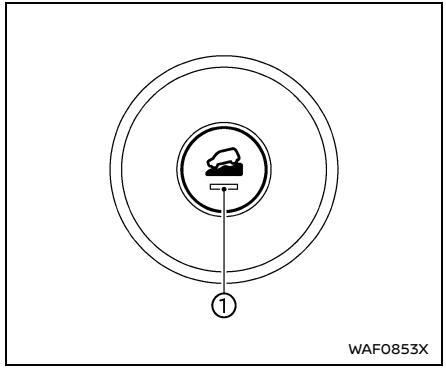

HILL DESCENT CONTROL SWITCH

When additional braking is required on steep downhill roads, activate the hill descent control system by pushing the hill descent control switch on.

When the hill descent control system is activated, the indicator light ① on the switch and the hill descent control system on indicator light on the meter will illuminate. (See "Hill descent control system on indicator light (if so equipped)" (P.106).) Also, the stop/tail lights illuminate while the hill descent control system is applying the brakes to control the vehicle speed.

To activate the hill descent control system, satisfy all of the following conditions:

- Shift the transmission to the forward or reverse gear.
- Shift the 4WD shift switch to the 4H or 4L (if so equipped) mode and drive the vehicle at a speed under 20 MPH (30 km/h).
- Push the differential lock mode switch (if so equipped) to the OFF position. (The differential lock indicator light on the meter is not illuminated.)
- Push the hill descent control switch to the ON position.

If the accelerator or brake pedal is depressed while the hill descent control system is on, the system will stop operating temporarily. As soon as the accelerator or brake pedal is released, the hill descent control system begins to function again if the hill descent control operating conditions are fulfilled.

If the rear differential lock system (if so equipped) is turned on, or the AUTO mode is selected in the 4WD system, while the hill descent control system is on, the system will stop operating.

The hill descent control system on indicator light on the meter blinks if the hill descent control switch is on and all conditions for system activation are not met, or if the system becomes disengaged for any reason.

To turn off the hill descent control system, push the hill descent control switch to the OFF position.

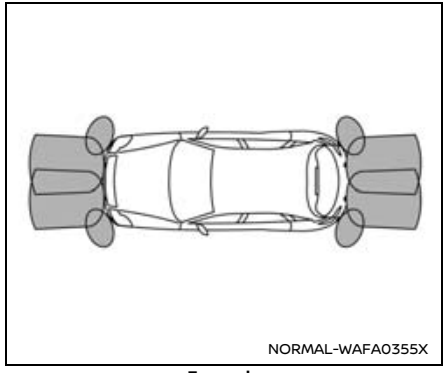

Example

BASIC INFORMATION

The sonar system sounds a tone to inform the driver of obstacles around the vehicle using the sonar sensors located in the front and rear bumpers.

When the sonar system is turned on, the sonar view will automatically appear in the vehicle information display.

⚠ WARNING

- **The sonar system is a convenience but it is not a substitute for proper parking.**

- **The driver is always responsible for safety during parking and other maneuvers. Always look around and check that it is safe to do so before parking.**
- **Read and understand the limitations of the sonar system as contained in this section. The colors of the sonar indicator indicates different distances to the object.**
- **Inclement weather or ultrasonic sources such as an automatic car wash, a truck's compressed-air brakes or a pneumatic drill may affect the function of the system; this may include reduced performance or a false activation.**
- **The sonar system is designed as an aid to the driver in detecting large stationary objects to help avoid damaging the vehicle.**
- **The sonar system is not designed to prevent contact with small or moving objects. Always move slowly. The system will not detect small objects below the bumper, and may not detect objects close to the bumper or on the ground.**
- **The sonar system may not detect the following objects: fluffy objects such as snow, cloth, cotton, glasswool, etc.; thin objects such as rope, wire and chain, etc.; or wedge-shaped objects.**
- **The sonar sensors detect the distance between the vehicle and the obstacle by detecting the sound wave reflected from the surface of an obstacle. When there is a sound such as horn, or an ultrasonic source (such as sonar of other vehicles) around the vehicle, the sonar may not detect objects properly.**

If your vehicle sustains damage to the bumper fascia, leaving it misaligned or bent, the sensing zone may be altered causing inaccurate measurement of obstacles or false alarms.

⚠ CAUTION

- **Excessive noise (such as audio system volume or an open vehicle window) will interfere with the tone and it may not be heard.**
- **Keep the sonar sensors (located on the bumper fascia) free from snow, ice and large accumulations of dirt. Do not clean the sensors with sharp objects. If the sensors are covered, the accuracy of the sonar function will be diminished.**

SYSTEM OPERATION

The system informs with a visual and audible alert of:

- Front obstacles when the shift button is in the D (Drive) position
- Front and rear obstacles when the shift button is in the R (Reverse) position

How the system alerts of obstacles:

The system is deactivated at speeds above 6 MPH (10 km/h). It is reactivated at lower speeds.

The intermittent tone will stop in a few seconds after the distance to stationary object becomes stable. The tone will stop when the obstacle gets away from the vehicle.

When the object is detected, the indicator (green) appears and blinks and the tone sounds intermittently. When the vehicle moves closer to the object, the color of the indicator turns yellow and the rate of the blinking increases. When the vehicle is very close to the object, the indicator stops blinking and turns red, and the tone sounds continuously.

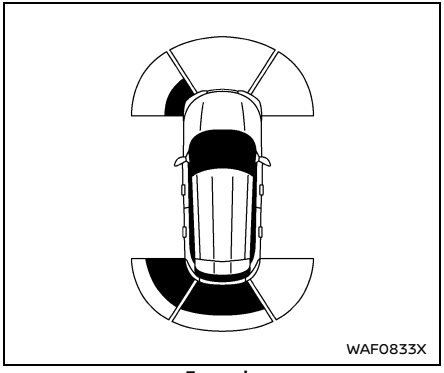

Example

When the vehicle moves closer to an obstacle, the sonar indicator (detected area) appears in the vehicle information display.

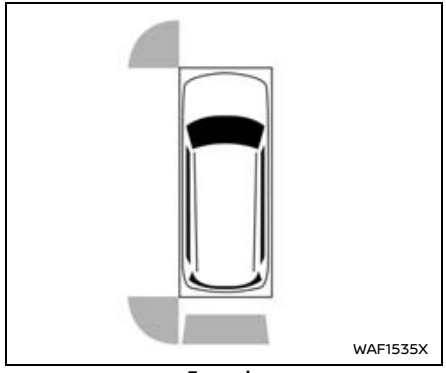

Example

The sonar indicator also appears on the camera view of the touch screen display.

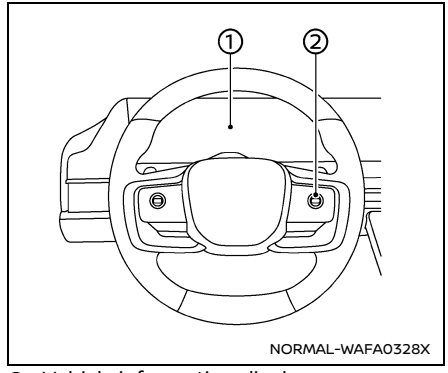

① Vehicle information display
② Steering-wheel-mounted control (right side)

HOW TO ENABLE/DISABLE THE SONAR SYSTEM

The system is automatically activated when the ignition switch is in the ON position and the shift button is in the D (Drive) or R (Reverse) position.

Perform the following steps to set up the sonar system function.

1. Push the ◀ ▶ button on the right side of the steering wheel ② until "Settings" appears in the vehicle information display and then push the scroll dial. Use the scroll dial to select "Driver Assistance." Then push the scroll dial.

2. Select "Parking Assist" and push the scroll dial.
3. Use the scroll dial to navigate in the menu and select or change an item:
   - Front Sonar
     — Turns ON/OFF the front sonar sensors
   - Rear Sonar
     — Turns ON/OFF the rear sonar sensors
   - Sonar Distance
     — Changes the sonar sensor's detection distance to "Long," "Medium" or "Short"
   - Auto Show Sonar
     — Shows the sonar display in the vehicle information display when the sonar activates
   - Sonar Volume
     — Changes the volume of the tone sound to "High," "Medium" or "Low"

SONAR SYSTEM LIMITATIONS

⚠ WARNING

Listed below are the system limitations for the sonar system. Failure to operate the vehicle in accordance with these system limitations could result in serious injury or death.

- **Read and understand the limitations of the sonar system as contained in this section. Inclement weather may affect the function of the sonar system; this may include reduced performance or a false activation.**
- **The sonar system is deactivated at speeds above 6 MPH (10 km/h). It is reactivated at lower speeds.**
- **Inclement weather or ultrasonic sources such as an automatic car wash, a truck's compressed-air brakes or a pneumatic drill may affect the function of the sonar system; this may include reduced performance or a false activation.**
- **The sonar system is not designed to prevent contact with small or moving objects. Always move slowly. The system will not detect small objects below the bumper or on the ground.**
- **The sonar system may not detect the following objects: fluffy objects such as snow, cloth, cotton, glass-wool, etc.; thin objects such as rope, wire and chain, etc.; or wedge-shaped objects; complex-shaped objects or multiple objects in close.**
- **The sonar system may not detect objects at speed above 3 MPH (5 km/h) and may not detect certain angular or moving objects.**
- **The sonar system may not detect pedestrians including small children and animals.**
- **The sonar system may not operate in the following conditions:**
  - **When rain, snow, ice, dirt, etc. adheres to the sonar sensor.**
  - **When a loud sound is heard in the area around the vehicle.**
  - **When the surface of the obstacle is diagonal to the front or rear of the vehicle.**
  - **When a sonar sensor or the area around the sensor is extremely hot or cold.**
- **The sonar system may unintentionally operate in the following conditions:**
  - **When there is overgrown grass in the area around the vehicle.**
  - **When there are bumps, protrusions or manhole covers on the road surface.**
  - **When the vehicle drives through a draped flag or a curtain.**
  - **When there is an accumulation of snow or ice behind the vehicle.**
  - **When driving on a steep hill.**
- **Depending on the vehicle height, the detection ability of sonar sensors may differ (models with air suspension system).**

SYSTEM TEMPORARILY UNAVAILABLE

When sonar blockage is detected, the system will be deactivated automatically.

The system is not available until the conditions no longer exist.

The sonar sensors may be blocked by temporary ambient conditions such as splashing water, mist or fog. The blocked condition may also be caused by ice, frost, snow or dirt obstructing the sonar sensors.

The rear sonar will be turned off if the Rear Automatic Braking (RAB) is temporarily canceled, the trailer BSW function is activated or the TOW mode has been selected (if so equipped) (see "How to temporarily cancel the RAB system" (P.402), "Trailer BSW function operation" (P.330) and "Drive Mode Selector (if so equipped)" (P.312)).

Action to take:

When the above conditions no longer exist, the system will resume automatically.

If the rear sonar system is deactivated due to the temporary cancellation of the RAB system, the rear sonar system will be automatically activated if the engine is turned off and then restarted after a period of time. However, if the trailer BSW function is activated or the TOW mode has been selected (if so equipped), or the rear sonar system has been turned off in the vehicle information display, the rear sonar system will not be turned on automatically.

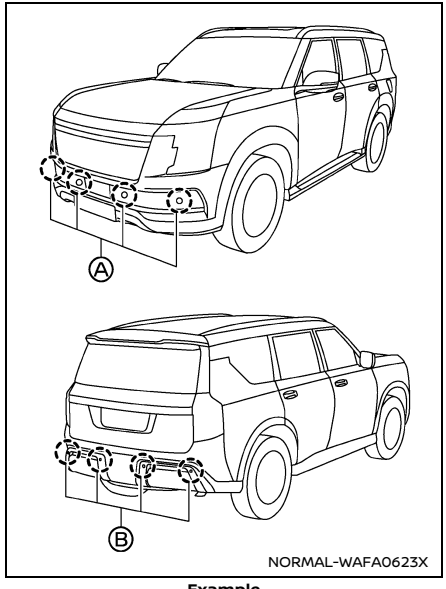

Example

SYSTEM MAINTENANCE

The sonar sensors Ⓐ and Ⓑ (4 or 6, depending on the model) are located on the front and rear bumpers.

- Always keep the area near the sonar sensors clean.
- If the sonar sensors are dirty, wipe them off with a soft cloth while being careful to not damage them.
- The sonar sensors may be blocked by temporary ambient conditions such as splashing water, mist or fog. The blocked condition may also be caused by ice, frost, snow or dirt obstructing the sonar sensors. Check for and remove objects obstructing the area around the sonar sensors.
- Do not subject the area around the sonar sensors to strong impact. Also, do not remove or disassemble the sonar sensors. If the sonar sensors and peripheral areas are deformed in an accident, etc., have the sonar sensors checked. It is recommended that you visit a NISSAN dealer for this service.
- Do not attach stickers (including transparent material), install accessories or apply additional paint on the sonar sensors and their surrounding areas. This may cause a malfunction or improper operation.
- When washing the vehicle using a high-pressure washer, do not apply direct washer pressure on the sonar sensors. This may cause a malfunction of the sonar sensors.

BASIC INFORMATION

The Idling Stop System activates to prevent unnecessary fuel consumption, exhaust emissions and noise.

- When you stop the vehicle, the engine is turned off automatically.
- When you release the brake pedal to begin moving again, the engine is turned on automatically.

⚠ WARNING

The engine restarts if the vehicle moves at approximately 1 MPH (2 km/h) or more (on a downhill grade, etc.) while the engine is turned off by the Idling Stop System. Depress the brake pedal immediately to stop the vehicle to prevent an accident.

⚠ CAUTION

- **At the end of the journey the engine must be stopped and ignition switch be pushed off. Lock the vehicle as normal. Pushing the ignition switch off will shut down all electrical systems. Failure to do this may result in a discharged battery.**
- **Place the ignition switch in the OFF position before opening the hood or performing any maintenance. Failure to do so may result in serious injuries due to automatic engine restart.**

NOTE:
The Idling Stop System will not activate under the following conditions:

- **When the engine is kept idling without the vehicle being driven after the engine is turned on.**
- **When the engine coolant temperature is low.**
- **When the battery capacity is low.**
- **When the battery temperature is low.**
- **When the vehicle is moving.**
- **When the engine hood is opened with the engine running.**
- **When the engine is turned on with the engine hood open.**
- **When the driver's seat belt is not fastened.**
- **When the driver's door is open.**
- **When the steering wheel is operated.**
- **When the 4L mode (if so equipped) is selected with the 4WD shift switch (see "NISSAN All-Mode 4WD® (if so equipped)" (P.407)).**
- **When the TOW, SAND, ROCK or MUD/RUT mode is selected in the Drive Mode Selector (if so equipped) (see "Drive Mode Selector (if so equipped)" (P.312)).**
- **When the Idling Stop System indicator blinks.**
- **When the fan speed control is in any position other than "OFF," (0) while the air flow control is in the front defroster position.**
- **When the front defroster switch is on.**
- **When the rear window defroster switch is on.**
- **When the temperature inside the vehicle is lower than approximately 68˚F (20˚C), unless the Air Conditioning ECO customize option (if so equipped) is selected, and the ECO driving mode is on.**
- **When the temperature inside the vehicle is higher than approximately 86˚F (30˚C), unless the Air Conditioning ECO customize option (if so equipped) is selected, and the ECO driving mode is on. (When the air conditioner is off, the Idling Stop System will operate.)**
- **When the fan speed of the air conditioner is set to the maximum speed, unless the Air Conditioning ECO customize option (if so equipped) is selected, and the ECO driving mode is on.**
- **When the Idling Stop OFF switch is turned on.**
- **When the power consumption is large.**
- **When the altitude is high.**

- When the accelerator pedal is depressed.
- When the shift button is any range other than D (Drive).
- When the brake pedal is not firmly depressed.
- When stopping the vehicle on steep sloping roads.

NOTE:
The Idling Stop System may not activate when the Intelligent Key is not in the vehicle and you open/close any door.

NOTE:
The engine will not restart even if the brake pedal is released while the Idling Stop System is activated under the following conditions: (The engine may restart under other conditions.)
- When the automatic brake hold system is activated.
- When the engine hood is opened.
- When the ProPILOT Assist system is activated.

NOTE:
It may take some time until the Idling Stop System activates under the following conditions:
- When the battery is discharged.
- When the outside temperature is low or high.
- When the battery is replaced or the battery terminal is disconnected for extended periods and then reconnected.

NOTE:
When the Idling Stop System indicator light illuminates, the engine starts running automatically under at least one of the following conditions:
- The driver's seat belt is unfastened, or the driver's door is open.
- The battery voltage becomes low (due to electrical load from other vehicle systems like headlights, heaters, etc., or auxiliary devices connected to the 12 volt socket inside the vehicle).
- The vehicle speed is above about 1 MPH (2 km/h).
- When the rear window defroster is operated.
- When the temperature inside the vehicle is lower than approximately 68°F (20°C), unless the Air Conditioning ECO customize option (if so equipped) is selected, and the ECO driving mode is on.
- When the temperature inside the vehicle is higher than approximately 86°F (30°C), unless the Air Conditioning ECO customize option (if so equipped) is selected, and the ECO driving mode is on. (When the air conditioner is off, the Idling Stop System will operate.)
- When the front defroster is turned on.
- When more than 3 minutes have elapsed since the Idling Stop System was active.
- When the accelerator pedal is depressed.
- When the steering wheel is operated. (The steering wheel operation may become heavy, but this is not a malfunction.)
- When the battery capacity is low.
- When the power consumption is high.
- When the shift button is any range other than D (Drive).
- When the Idling Stop OFF switch is pushed.
- When the 4L mode (if so equipped) is selected.
- When the TOW, SAND, ROCK or MUD/RUT mode is selected in the Drive Mode Selector (if so equipped) (see "Drive Mode Selector (if so equipped)" (P.312)).
- When the ProPILOT Assist system is set to operate (the engine may not start depending on the amount of brake pedal depression).
- When the ProPILOT Assist system is activated and driver operates the system to start the vehicle.
- When the ProPILOT Assist system is activated and the vehicle ahead is started.

NOTE:
The Idling Stop System may not active when the Intelligent Key is not in the vehicle and you open/close any door.

NOTE:
The following condition will prevent the Idling Stop System from automatically

restarting the engine. Starting the engine with the ignition switch operation is then necessary:

- **The hood is open.**

Use this system while waiting at a stop light, etc. When the vehicle is stopped for long periods of time, turn off the engine.

When the engine is stopped by the Idling Stop System, heating, cooling and dehumidifying functions will be deactivated. To avoid the air conditioning functions from being deactivated, turn off the Idling Stop System by pushing the Idling Stop OFF switch.

RETROGRADE MOVEMENT CONTROL FUNCTION

This system is designed to reduce the retrograde movement that occurs while the driver's foot changes from depressing the brake pedal to the accelerator pedal when moving the vehicle while the Idling Stop System is active on a hilly road.

IDLING STOP SYSTEM DISPLAY

Basic information

The status of the Idling Stop System can be checked in the vehicle information display.

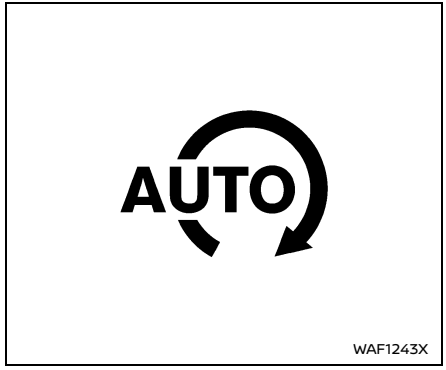

Idling Stop System indicator

This indicator is displayed when the Idling Stop System is activated.

The indicator blinks when the Idling Stop System is malfunctioning.

NOTE:
When the indicator blinks, have the system checked, and if necessary repaired promptly. It is recommended you visit a NISSAN dealer for this service.

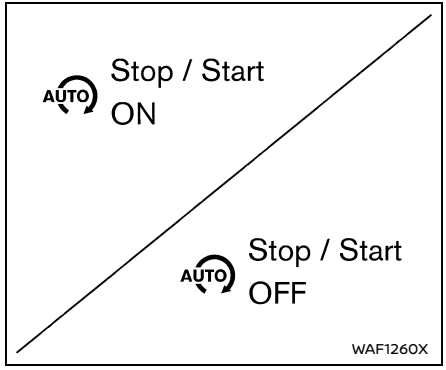

Idling Stop System ON or OFF

If the Idling Stop System is activated or deactivated using the Idling Stop OFF switch, the message is shown.



Fuel saved and engine stop time

The fuel saved and the engine stop time mode shows the following items:

- The fuel saved shows the estimated quantity of fuel that was saved by the Idling Stop System every time the engine is automatically stopped.
- The engine stop time shows the time that the engine has been stopped for by the Idling Stop System.

The total fuel saved and the engine stop time can also be checked in the vehicle information display. For additional information, see "Vehicle information display" (P.111).

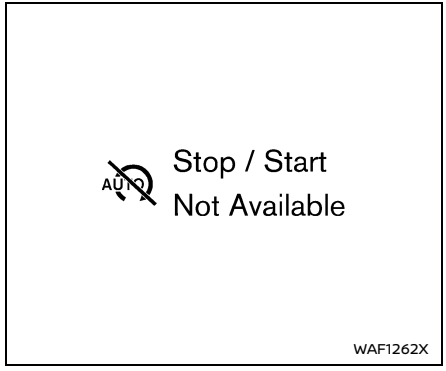

Auto start deactivation

If the engine stops when the Idling Stop System is activated and will not start automatically, the message is shown.

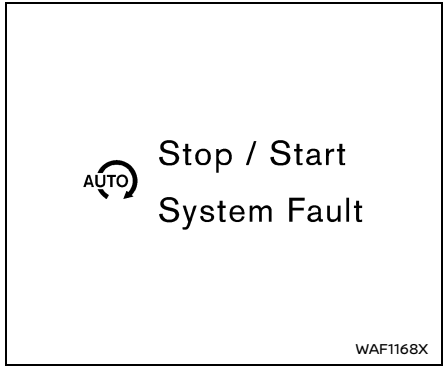

System fault

This message is displayed when the Idling Stop System is malfunctioning.
It is recommended that you have the system checked. It is recommended that you visit a NISSAN dealer for this service.

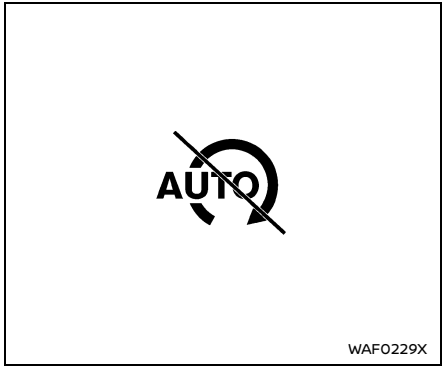

Idling Stop inhibition

This indicator is displayed when the vehicle is stopped if the engine is prevented from automatically stopping by the Idling Stop System under the inhibition conditions. See "Idling Stop System" (P.432).

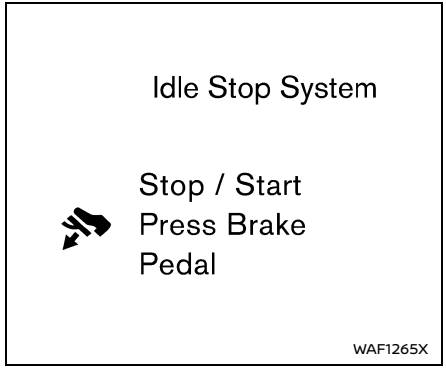

Idling Stop guidance display (further depressing the brake pedal)

When the vehicle is stopped, the guidance is displayed if the Idling Stop system is deactivated due to not fully depressing the brake pedal.

If you wish to activate the Idling Stop system, further depress the brake pedal. See "Idling Stop System" (P.432).

The display appears when the fuel saved and the engine stop time is selected on the vehicle information display.

The display disappears under the following conditions.

- The Idling Stop system is activated.
- The vehicle starts running.

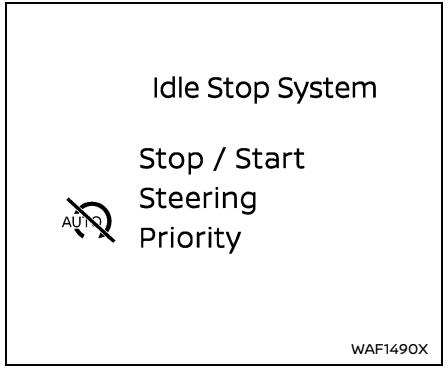

Idling Stop guidance display (detection of the steering operation)

When the vehicle is stopped, the guidance is displayed if the Idling Stop system is deactivated since the steering operation is detected.

The Idling Stop system is deactivated due to steering operation being detected. See "Idling Stop System" (P.432).

The display appears when the fuel saved and the engine stop time is selected on the vehicle information display.

The display disappears under the following conditions.

- The Idling Stop system is activated.
- The vehicle starts running.

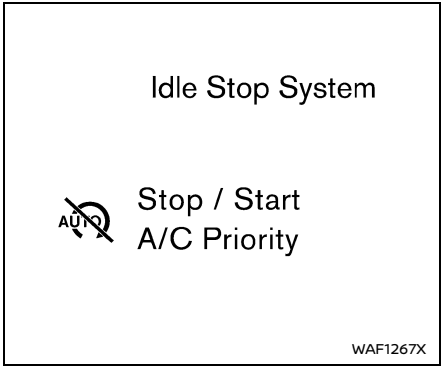

Idling Stop guidance display (placing priority on the air conditioner)

When the vehicle is stopped, the guidance is displayed if the Idling Stop system is deactivated since the air conditioner (cooling, heating or dehumidifying functions) is given priority.

The Idling Stop system is deactivated since the air conditioner is given priority. See "Idling Stop System" (P.432).

The display appears when the fuel saved and the engine stop time is selected on the vehicle information display.

- The Idling Stop system is activated.
- The vehicle starts running.

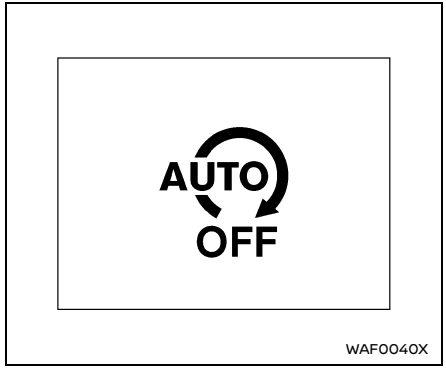

IDLING STOP OFF SWITCH

The system can be temporarily deactivated by pressing the Idling Stop OFF switch. Pressing the switch again or restarting the engine by using the ignition switch will reactivate the Idling Stop System.

- When the Idling Stop System is deactivated while the engine is running, the engine is prevented from automatically stopping.
- When the Idling Stop System is deactivated after the engine has been automatically stopped by the Idling Stop System, the engine will immediately restart if suitable conditions are present. The engine will then be prevented from automatically stopping during the same journey.

NOTE:

- **The Idling Stop System ON or OFF message is displayed for a few seconds in the vehicle information display when the Idling Stop System OFF switch is pushed. For additional information, see "Idling Stop System display" (P.434).**
- **The Idling Stop System resets to ON every time the ignition switch is switched from the OFF position to the ON position.**
- **It is best to disable the Idling Stop System when towing a trailer. You can do this by pushing the Idling Stop OFF switch or selecting the TOW mode (if so equipped) (see "Drive Mode Selector (if so equipped)" (P.312)).**

FREEING A FROZEN DOOR LOCK

To prevent a door lock from freezing, apply deicer through the key hole. If the lock becomes frozen, heat the key before inserting it into the key hole, or use the Intelligent Key system.

ANTI-FREEZE

In the winter when it is anticipated that the outside temperature will drop below 32°F (0°C), check the anti-freeze to assure proper winter protection. For additional information, see "Engine cooling system" (P.469).

BATTERY

If the battery is not fully charged during extremely cold weather conditions, the battery fluid may freeze and damage the battery. To maintain maximum efficiency, the battery should be checked regularly. For additional information, see "Battery" (P.476).

DRAINING OF COOLANT WATER

If the vehicle is to be left outside without anti-freeze, drain the cooling system, including the engine block. Refill before operating the vehicle. For details, see "Engine cooling system" (P.469).

TIRE EQUIPMENT

Basic information

SUMMER tires have a tread designed to provide superior performance on dry pavement. However, the performance of these tires will be substantially reduced in snowy and icy conditions. If you operate your vehicle on snowy or icy roads, NISSAN recommends the use of MUD & SNOW or ALL SEASON tires on all four wheels. It is recommended you consult a NISSAN dealer for the tire type, size, speed rating and availability information.

If you have snow tires installed on the front/rear wheels of your vehicle, they should be of the same size, loading range, construction and type (bias, bias-belted or radial) as the rear/front tires.

If the vehicle is to be operated in severe winter conditions, snow tires should be installed on all four wheels.

For additional traction on icy roads, studded tires may be used. However, some U.S. states and Canadian provinces prohibit their use. Check local, state and provincial laws before installing studded tires.

Skid and traction capabilities of studded snow tires, on wet or dry surfaces, may be poorer than that of non-studded snow tires.

Tire chains may be used. For details, see "Tire chains" (P.498) of this manual.

For Four-wheel Drive (4WD) models

If you install snow tires, they must also be the same size, brand, construction and tread pattern on all four wheels.

SPECIAL WINTER EQUIPMENT

It is recommended that the following items be carried in the vehicle during winter:

- A scraper and stiff-bristled brush to remove ice and snow from the windows and wiper blades.
- A sturdy, flat board to be placed under the jack to give it firm support.
- A shovel to dig the vehicle out of snowdrifts.
- Extra window washer fluid to refill the reservoir tank.

DRIVING ON SNOW or ICE

⚠ WARNING

- **Wet ice (32°F, 0°C and freezing rain), very cold snow or ice can be slick and very hard to drive on. The vehicle will have much less traction or "grip" under these conditions. Try to avoid driving on wet ice until the road is salted or sanded.**
- **Whatever the condition, drive with caution. Accelerate and slow down with care. If accelerating or downshifting too fast, the drive wheels will lose even more traction.**
- **Allow more stopping distance under these conditions. Braking should be started sooner than on dry pavement.**
- **Allow greater following distances on slippery roads.**

- **Watch for slippery spots (glare ice). These may appear on an otherwise clear road in shaded areas. If a patch of ice is seen ahead, brake before reaching it. Try not to brake while on the ice, and avoid any sudden steering maneuvers.**
- **Do not use cruise control on slippery roads.**
- **Snow can trap dangerous exhaust gases under your vehicle. Keep snow clear of the exhaust pipe and from around your vehicle.**

ENGINE BLOCK HEATER (if so equipped)

Basic information

Engine block heaters are used to assist in cold temperature starting.
The engine block heater should be used when the outside temperature is 20°F (−7°C) or lower.

To use the engine block heater

1. Turn the engine off.
2. Open the hood and unwrap the engine block heater cord.
3. Plug the engine block heater cord into a grounded 3-wire, 3-pronged extension cord.
4. Plug the extension cord into a Ground Fault Interrupt (GFI) protected, grounded 110-volt AC (VAC) outlet.
5. The engine block heater must be plugged in for at least 2 - 4 hours, depending on outside temperatures, to properly warm the engine coolant. Use an appropriate timer to turn the engine block heater on.
6. Before starting the engine, unplug and properly store the cord to keep it away from moving parts.

⚠ WARNING

- **Do not use your engine block heater with an ungrounded electrical system or a 2-pronged adapter. You can be seriously injured by an electrical shock if you use an ungrounded connection.**
- **Disconnect and properly store the engine block heater cord before starting the engine. Damage to the cord could result in an electrical shock and can cause serious injury.**
- **Use a heavy-duty 3-wire, 3-pronged extension cord rated for at least 10A. Plug the extension cord into a Ground Fault Interrupt (GFI) protected, grounded 110-VAC outlet. Failure to use the proper extension cord or a grounded outlet can result in a fire or electrical shock and cause serious personal injury.**

ACTIVE SOUND ENHANCEMENT (if so equipped)

NOTE:
To operate the active sound enhancement system properly:
- **Do not cover the speakers.**
- **Do not change or modify speakers.**
- **Do not make any modification including sound deadening or modifications around the speakers.**

The active sound enhancement generates sounds according to engine speed and driving modes through the front speaker to enhance the quality of the engine sound.

MEMO

6 In case of emergency

Hazard warning flasher switch 442
Connection to Roadside Assistance 442
Emergency engine shut off 443
Flat tire 443
Tire Pressure Monitoring System (TPMS) 443
Changing a flat tire 444
Jump starting 451
Push starting 453
If your vehicle overheats 453
Towing your vehicle 454
Basic information 454
Towing recommended by NISSAN 455
Vehicle recovery (freeing a stuck vehicle) 456

HAZARD WARNING FLASHER SWITCH

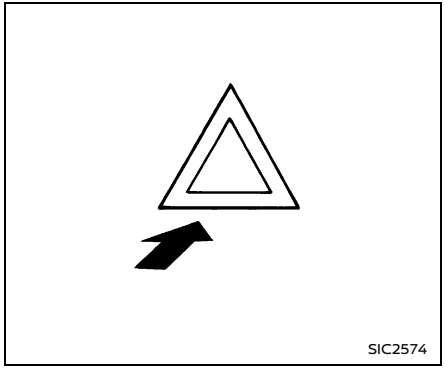

Push the switch on to warn other drivers when you must stop or park under emergency conditions. All turn signal lights will flash.

⚠ WARNING

- **If stopping for an emergency, be sure to move the vehicle well off the road.**
- **Do not use the hazard warning flashers while moving on the highway unless unusual circumstances force you to drive so slowly that your vehicle might become a hazard to other traffic.**
- **Turn signals do not work when the hazard warning flasher lights are on.**

The flasher can be actuated with the ignition switch in any position.
When an impact that could activate the supplemental air bags is detected, the hazard warning flasher lights blink automatically. If the hazard warning flasher switch is pushed twice, the hazard warning flashers will turn off.

⚠ WARNING

Do not turn the hazard warning flasher switch to off until you can make sure that it is safe to do so. Also, the hazard flasher warning may not blink automatically depending on the force of impact.

Some state laws may prohibit the use of the hazard warning flasher switch while driving.

CONNECTION TO ROADSIDE ASSISTANCE

In the event of a roadside emergency, Roadside Assistance Service is available to you. Please refer to your Warranty Information Booklet (U.S.) or Warranty & Roadside Assistance Information Booklet (Canada) for details.

EMERGENCY ENGINE SHUT OFF

To shut off the engine in an emergency situation while driving, perform the following procedure:

- Rapidly push the push-button ignition switch 3 consecutive times in less than 1.5 seconds, or
- Push and hold the push-button ignition switch for more than 2 seconds.

FLAT TIRE

TIRE PRESSURE MONITORING SYSTEM (TPMS)

This vehicle is equipped with the Tire Pressure Monitoring System (TPMS). It monitors tire pressure of all tires except the spare. When the low tire pressure warning light is lit and the "Tire Pressure Low Add Air" warning appears in the vehicle information display, one or more of your tires is significantly under-inflated. If the vehicle is being driven with low tire pressure, the TPMS will activate and warn you of it by the low tire pressure warning light. This system will activate only when the vehicle is driven at speeds above 16 MPH (25 km/h). For more details, see "Warning lights, indicator lights and audible reminders" (P.102) and "Tire Pressure Monitoring System (TPMS)" (P.290).

⚠ WARNING

- **If the low tire pressure warning light illuminates while driving, avoid sudden steering maneuvers or abrupt braking, reduce vehicle speed, pull off the road to a safe location and stop the vehicle as soon as possible. Driving with under-inflated tires may permanently damage the tires and increase the likelihood of tire failure. Serious vehicle damage could occur and may lead to an accident and could result in serious personal injury. Check the tire pressure for all four tires. Adjust the tire pressure to the recommended COLD tire pressure shown on the Tire and Loading Information label to turn the low tire pressure warning light OFF. If the light still illuminates while driving after adjusting the tire pressure, a tire may be flat. If you have a flat tire, replace it with a spare tire as soon as possible.**

- **Since the spare tire is not equipped with the TPMS, when a spare tire is mounted or a wheel is replaced, the TPMS will not function and the low tire pressure warning light will flash for approximately 1 minute. The light will remain on after 1 minute. Have your tires replaced and/or TPMS system reset as soon as possible. It is recommended you visit a NISSAN dealer for these services.**
- **Replacing tires with those not originally specified by NISSAN could affect the proper operation of the TPMS.**
- **Do not inject any tire liquid or aerosol tire sealant into the tires, as this may cause a malfunction of the tire pressure sensors.**
- **To help avoid serious personal injury or death, when checking your tire pressure, either as part of routine maintenance or because of a TPMS alert, please check the pressure in all of your tires. Driving on under-inflated tires can cause tire failure and interfere with the proper operation of other vehicle systems.**

CHANGING A FLAT TIRE

Basic information

If you have a flat tire, follow the instructions below.

Stopping the vehicle

1. Safely move the vehicle off the road and away from traffic.
2. Turn on the hazard warning flashers.
3. Park on a level surface and apply the parking brake. Select the transmission in the P (Park) position.
4. Turn off the engine.
5. Raise the hood to warn other traffic, and to signal professional road assistance personnel that you need assistance.
6. Have all passengers get out of the vehicle and stand in a safe place, away from traffic and clear of the vehicle.

⚠ WARNING

- **Make sure the parking brake is securely applied and the automatic transmission is in the P (Park) position.**
- **Never change tires when the vehicle is on a slope, ice or slippery areas. This is hazardous.**
- **Never change tires if oncoming traffic is close to your vehicle. Wait for professional road assistance.**

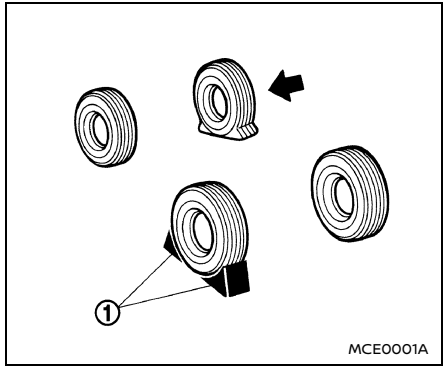

Blocking wheels

Place suitable blocks ① at both the front and back of the wheel diagonally opposite the flat tire to prevent the vehicle from moving when it is jacked up.

⚠ WARNING

Be sure to block the wheel as the vehicle may move and result in personal injury.

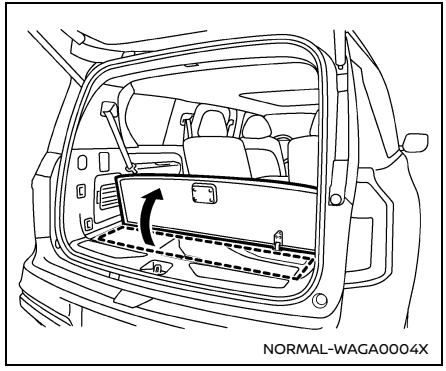

Getting the spare tire and tools

1. Open the liftgate.
2. Raise the cargo floor board.

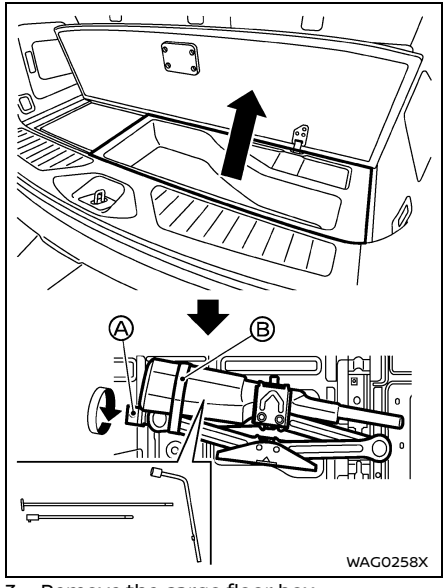

3. Remove the cargo floor box.
4. Turn the jack handle holder Ⓐ counter-clockwise and remove the jack with tools. Then unfasten the hook and loop fastener belt Ⓑ to remove the tool bag. Take out the tools.

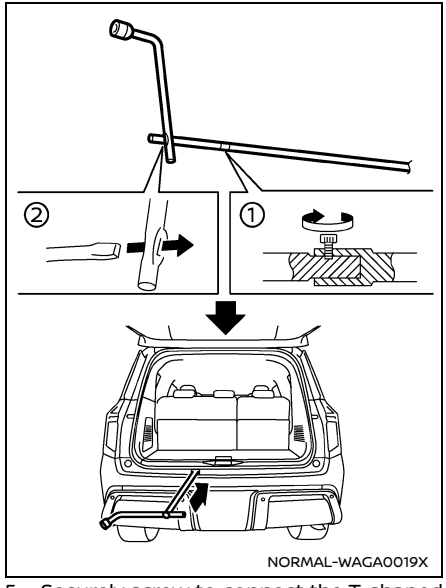

5. Securely screw to connect the T-shaped end of the jack rod and the extension bar ① as illustrated.
6. Fit the square end of the jack rod into the square hole of the wheel nut wrench to form a handle ②.
7. Locate the oval opening above the middle of the rear bumper.

8. Place the T-shaped end of the jack rod through the opening and direct it towards the spare wheel winch assembly, located directly above the spare wheel.

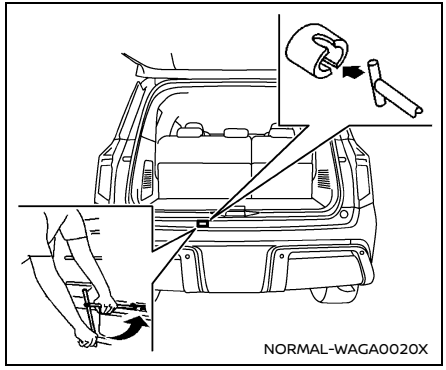
NORMAL-WAGA0020X

CAUTION

Do not insert the jack rod straight as it is designed to be inserted at an angle as shown.

9. Seat the T-shaped end of the jack rod into the T-shaped opening of the spare wheel winch. Apply pressure to keep the jack rod engaged in the spare wheel winch and turn the jack rod counter-clockwise to lower the spare wheel.

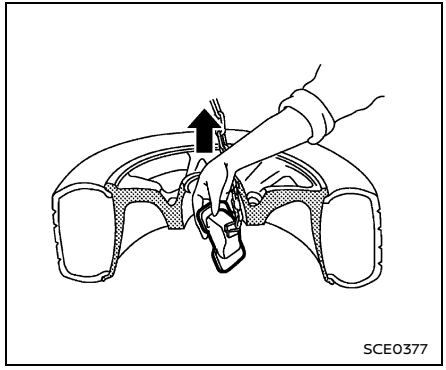
SCE0377

10. Once the spare wheel is completely lowered, remove the jack rod and reach under the vehicle to remove the hanging plate.
11. Carefully slide the spare wheel from under the rear of the vehicle.

If it is difficult to access the spare wheel, remove the trailer hitch cover located on the lower part of the rear bumper. For details, see "Towing safety" (P.541).

After preparing the spare tire, to remove the rod, pull out the rod while moving the rod to the right and left with the screw of the extension facing the side.

⚠ CAUTION

When storing the wheel, make sure that the hanging plate is in the center of the wheel and then lift it up into the storage area.

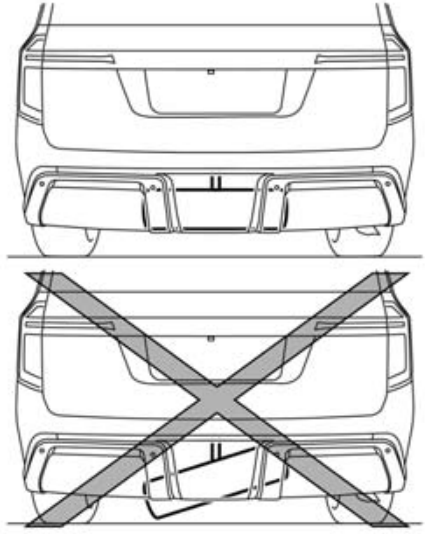

NORMAL-WAGA0021X

⚠ CAUTION

When storing the wheel, be sure to mount the wheel horizontally. Securing the wheel that is in a tilted position as illustrated may cause looseness and dropping of the wheel while driving. Lower the wheel on the ground again, and make sure that the hanging plate is properly set. Hang the wheel again and make sure that the wheel is held horizontally, then store the wheel.

Jacking up the vehicle and removing the damaged tire

⚠ WARNING

- **Never get under the vehicle while it is supported only by the jack. If it is necessary to work under the vehicle, support it with safety stands.**
- **Use only the jack provided with your vehicle to lift the vehicle. Do not use the jack provided with your vehicle on other vehicles. The jack is designed for lifting only your vehicle during a tire change.**
- **Use the correct jack-up points. Never use any other part of the vehicle for jack support.**
- **Never jack up the vehicle more than necessary.**

- **Never use blocks on or under the jack.**
- **Do not start or run the engine while vehicle is on the jack, as it may cause the vehicle to move. This is especially true for vehicles with limited slip differentials.**
- **Do not allow passengers to stay in the vehicle while it is on the jack.**

For models with air suspension system, observe the following warnings.

⚠ WARNING

- **Never put in your body between the tire and the vehicle body. The vehicle height may rise or fall unintentionally, resulting in serious injury or death.**
- **Only jack up the vehicle when the air suspension normal mode is selected.**

Carefully read the caution label attached to the jack body and the following instructions.

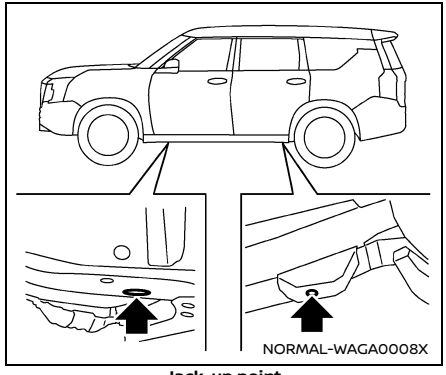

Jack-up point

1. Place the jack directly under the jack-up points as illustrated.
   The jack should be used on level firm ground.

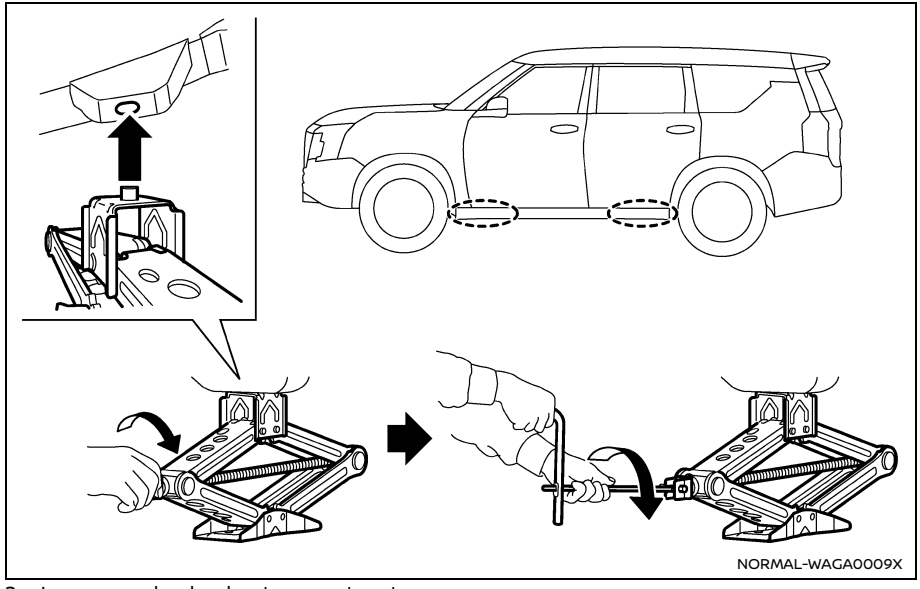

2. Loosen each wheel nut one or two turns by turning counterclockwise with the wheel nut wrench. **Do not remove the wheel nuts until the tire is off the ground.**

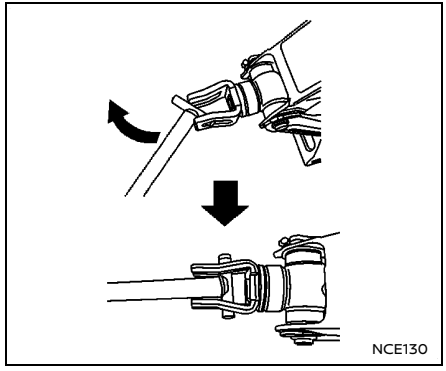

3. Install the assembled jack rod into the jack as shown.
4. Carefully raise the vehicle until the clearance between the tire and ground is achieved.
5. To lift the vehicle, securely hold the jack lever and rod with both hands and turn the jack lever.

NOTE:
Before jacking up the vehicle, make sure the ignition switch is placed in the OFF position.

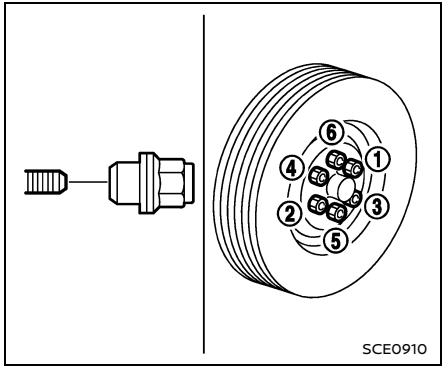

Installing the spare tire

The temporary use only spare tire (if so equipped) is designed for emergency use. (See "Spare tire" (P.501) for specific instructions.)

1. Clean any mud or dirt from the surface between the wheel and hub.
2. Carefully put the spare tire on and tighten the wheel nuts finger tight.
3. With the wheel nut wrench, tighten wheel nuts alternately and evenly in the sequence illustrated (①, ②, ③, ④, ⑤, ⑥) until they are tight.
4. Lower the vehicle slowly until the tire touches the ground. Then, with the wheel nut wrench, tighten the wheel nuts securely in the sequence as illustrated. Lower the vehicle completely.

⚠ WARNING

- **Incorrect wheel nuts or improperly tightened wheel nuts can cause the wheel to become loose or come off. This could cause an accident.**
- **Do not use oil or grease on the wheel studs or nuts. This could cause the nuts to become loose.**
- **Retighten the wheel nuts when the vehicle has been driven for 600 miles (1,000 km) (also in cases of a flat tire, etc.).**

- **As soon as possible, tighten the wheel nuts to the specified torque with a torque wrench.**

Wheel nut tightening torque:
98 ft-lb (133 N·m)

The wheel nuts must be kept tightened to specification at all times. It is recommended that wheel nuts be tightened to specifications at each lubrication interval.

- **Adjust tire pressure to the COLD pressure.**
  COLD pressure:
  After the vehicle has been parked for three hours or more or driven less than 1 mile (1.6 km).
  COLD tire pressures are shown on the Tire and Loading Information label affixed to the driver side center pillar.

After adjusting tire pressure to the COLD tire pressure, the display of the tire pressure information may show higher pressure than the COLD tire pressure after the vehicle has been driven more than 1 mile (1.6 km). This is because the tire pressurizes as the tire temperature rises. This does not indicate a system malfunction.

Stowing the damaged tire and tools

1. Securely store the damaged tire, jack and tools in the storage area.
2. Close the cargo floor cover.
3. Replace the cargo floor board.
4. Close the liftgate.

⚠ WARNING

- **Always make sure that the spare tire and jacking equipment are properly secured after use. Such items can become dangerous projectiles in an accident or sudden stop.**

- **The full-size temporary use only spare tire (if so equipped) is designed for emergency use. (See specific instructions under the heading "Spare tire" (P.501) for specific instructions.)**

JUMP STARTING

To start your engine with a booster battery, the instructions and precautions below must be followed.

⚠ WARNING

- **If done incorrectly, jump starting can lead to a battery explosion, resulting in severe injury or death. It could also damage your vehicle.**
- **Explosive hydrogen gas is always present in the vicinity of the battery. Keep all sparks and flames away from the battery.**
- **Do not allow battery fluid to come into contact with eyes, skin, clothing or painted surfaces. Battery fluid is a corrosive sulphuric acid solution which can cause severe burns. If the fluid should come into contact with anything, immediately flush the contacted area with water.**
- **Keep the battery out of the reach of children.**
- **The booster battery must be rated at 12 volts. Use of an improperly rated battery can damage your vehicle.**
- **Whenever working on or near a battery, always wear suitable eye protectors (for example, goggles or industrial safety spectacles) and remove rings, metal bands, or any other jewelry. Do not lean over the battery when jump starting.**
- **Do not attempt to jump start a frozen battery. It could explode and cause serious injury.**
- **Your vehicle has an automatic engine cooling fan. It could come on at any time. Keep hands and other objects away from it.**

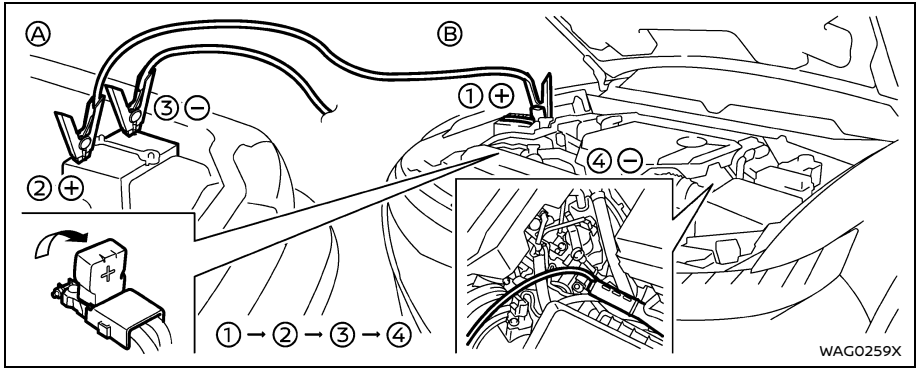

⚠ WARNING

Always follow the instructions below. Failure to do so could result in damage to the charging system and cause personal injury.

1. If the booster battery is in another vehicle Ⓐ, position the two vehicles (Ⓐ and Ⓑ) to bring their batteries into close proximity to each other.
   Do not allow the two vehicles to touch.
2. Apply parking brake. Select the transmission in the P (Park) position. Switch off all unnecessary electrical systems (light, heater, air conditioner, etc.).
3. Place the ignition switch to the OFF position.
4. Connect jumper cables in the sequence as illustrated (① → ② → ③ → ④).

⚠ CAUTION

- **Always connect positive (+) to positive (+) and negative (–) to body ground (as illustrated) — not to the battery.**
- **Make sure the jumper cables do not touch moving parts in the engine compartment and that clamps do not contact any other metal.**

5. Start the engine of the booster vehicle Ⓐ and let it run for a few minutes.
6. Keep the engine speed of the booster vehicle Ⓐ at about 2,000 rpm, and start the engine of the vehicle being jump started Ⓑ.
   If the engine cannot be started, turn off the ignition switch. Once the driver's door is opened and closed with the Intelligent Key in the vehicle, do not perform any operations such as operating navigation system, audio, or door lock. Wait for more than 3 minutes with the door closed, then restart the engine.

⚠ CAUTION

Do not keep the starter motor engaged for more than 10 seconds. If the engine does not start right away, push the ignition switch to the OFF position and wait 10 seconds before trying again.

7. After starting your engine, carefully disconnect the negative cable and then the positive cable (④ → ③ → ② → ①).

NOTE:
When the battery is completely drained, the Headlight System Error message may appear in the vehicle information display after jump starting. However, the headlights can be turned on or off by operating the headlight switch.

To turn off the Headlight System Error message, place the ignition switch in the OFF position, open and close the driver's door, wait for about 3 minutes without any operation, and then restart the engine.

PUSH STARTING

Do not attempt to start the engine by pushing.

⚠ CAUTION

- **Automatic transmission models cannot be push-started or tow-started. Attempting to do so may cause transmission damage.**
- **Three way catalyst equipped models should not be started by pushing since the three way catalyst may be damaged.**
- **Never try to start the vehicle by towing it; when the engine starts, the forward surge could cause the vehicle to collide with the tow vehicle.**

IF YOUR VEHICLE OVERHEATS

All NISSAN vehicles have engine protection mode, which helps reduce the chance of engine damage if the engine coolant reaches a specified temperature. (Refer to "Engine protection mode" (P.301).)

⚠ WARNING

- **Do not continue to drive if your vehicle overheats. Doing so could cause engine damage or a vehicle fire.**
- **To avoid the danger of being scalded, do not open the hood if steam is coming out.**

  Never remove the radiator or coolant reservoir cap when the radiator is hot. If the cap is removed under these conditions, pressurized hot water/coolant may spurt out, possibly causing serious injury.

If your vehicle is overheating (indicated by an extremely high temperature gauge reading), or if you feel a lack of engine power, detect abnormal noise, etc., take the following steps:

1. Move the vehicle safely off the road, apply the parking brake and shift the transmission to the P (Park) position.

   Do not stop the engine.
2. Turn off the climate control. Open all the windows, move the heater or air conditioner temperature control to maximum hot and fan control to high speed. The

heater core in your vehicle is just like a miniature engine radiator and will provide an extra cooling surface to help reduce engine temperature.

3. If engine overheating is caused by climbing a long hill on a hot day, run the engine at a fast idle (approximately 1,500 rpm) until the temperature gauge indication returns to normal.
4. If the temperature does not drop or continues to increase stop the engine immediately.
5. Being cautious of traffic, step out of the vehicle and, from a safe distance, look and listen for steam or coolant escaping from the radiator or under the engine. If you see steam or leaking coolant stand clear to avoid being burned and shut off your engine immediately to allow it to cool. Do not open the hood until no steam or coolant can be seen.
6. Open the engine hood.

⚠ WARNING

If steam or water is coming from the engine, stand clear to prevent getting burned.

7. Visually check drive belts for damage or looseness. Also check if the cooling fan is running. The radiator hoses and radiator should not leak water. If coolant is leaking or the cooling fan does not run, stop the engine.

⚠ WARNING

Be careful not to allow your hands, hair, jewelry or clothing to come into contact with, or get caught in, engine belts or the engine cooling fan. The engine cooling fan can start at any time.

8. After the engine cools down, check the coolant level in the reservoir tank with the engine running. Add coolant to the reservoir tank if necessary. Have your vehicle repaired. It is recommended you visit a NISSAN dealer for this service.

⚠ WARNING

When adding the coolant to the reservoir tank, only open the engine coolant reservoir tank cap. Never open the radiator filler cap and the engine coolant reservoir tank cap at the same time.

(See "Engine compartment check locations" (P.469).)

BASIC INFORMATION

When towing your vehicle, all State (Provincial in Canada) and local regulations for towing must be followed. Incorrect towing equipment could damage your vehicle. Towing instructions are available from a NISSAN dealer. Local service operators are familiar with the applicable laws and procedures for towing. To assure proper towing and to prevent accidental damage to your vehicle, NISSAN recommends that you have a service operator tow your vehicle. It is advisable to have the service operator carefully read the following precautions.

⚠ WARNING

- **Never ride in a vehicle that is being towed.**
- **Never get under your vehicle after it has been lifted by a tow truck.**

⚠ CAUTION

- **When towing, make sure that the transmission, axles, steering system and powertrain are in working condition. If any of these conditions are not working, dollies or a flatbed tow truck must be used.**
- **Always attach safety chains before towing.**

For information about towing your vehicle behind a recreational vehicle (RV), see "Flat towing your vehicle" (P.555).

NOTE:
If the battery is completely drained, the transmission will not manually shift to other positions. For shifting to other positions, charge the battery or supply power following the jump starting procedure. Push the park button to shift to the P (Park) position before shifting to other positions.

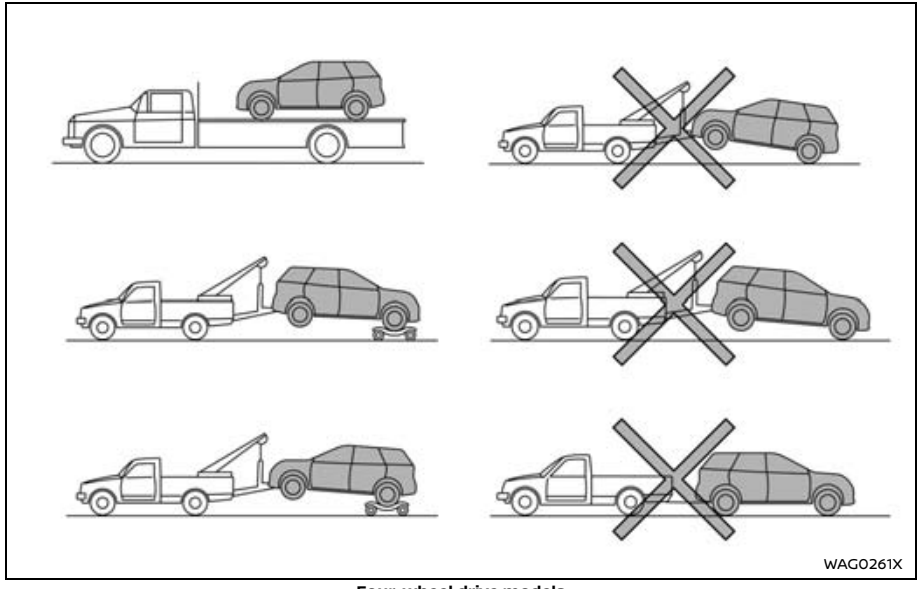

Four-wheel drive models

TOWING RECOMMENDED BY NISSAN

Four-wheel Drive (4WD) models

NISSAN recommends that towing dollies be used when towing your vehicle or the vehicle be placed on a flat bed truck as illustrated.

⚠ CAUTION

Never tow 4WD models with any of the wheels on the ground as this may cause serious and expensive damage to the powertrain.

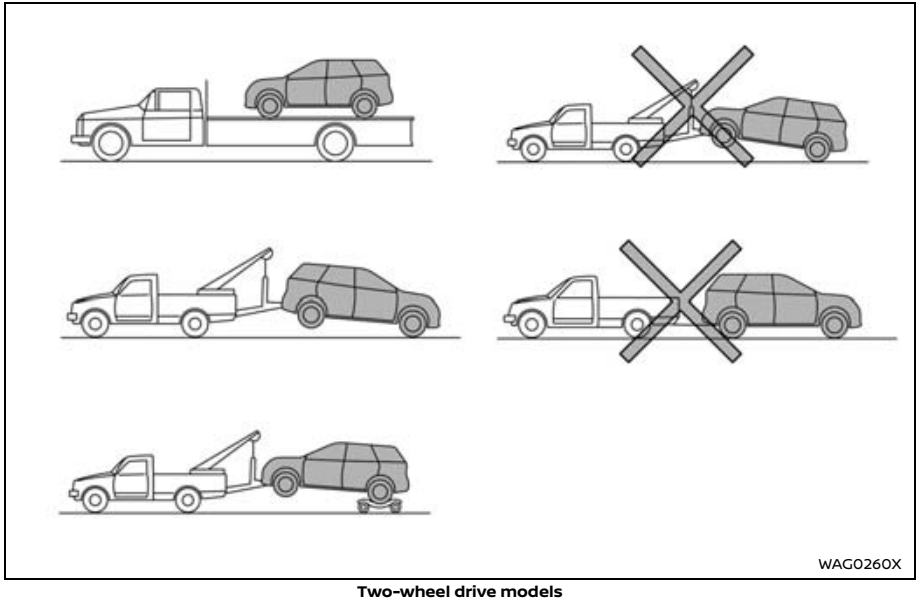

Two-wheel drive models

Two-Wheel Drive (2WD) models

NISSAN recommends that your vehicle be towed with the driving (rear) wheels off the ground or place the vehicle on a flat bed truck as illustrated.

⚠ CAUTION

- **Never tow automatic transmission models with the rear wheels on the ground or four wheels on the ground (forward or backward), as this may cause serious and expensive damage to the transmission. If it is necessary to tow the vehicle with the front wheels raised, always use towing dollies under the rear wheels.**
- **When towing rear wheel drive models with the front wheels on the ground or on towing dollies: Place the ignition in the ACC or ON position, and secure the steering wheel in a straight-ahead position with a rope or similar device.**

VEHICLE RECOVERY (freeing a stuck vehicle)

Basic information

⚠ WARNING

To avoid vehicle damage, serious personal injury or death when recovering a stuck vehicle:

- **Contact a professional towing service to recover the vehicle if you have any questions regarding the recovery procedure.**
- **Tow chains or cables must be attached only to main structural members of the vehicle.**
- **Do not use the vehicle tie-downs to tow or free a stuck vehicle.**
- **Only use devices specifically designed for vehicle recovery and follow the manufacturer's instructions.**
- **Always pull the recovery device straight out from the front of the vehicle. Never pull at an angle.**
- **Route recovery devices so they do not touch any part of the vehicle except the attachment point.**

If your vehicle is stuck in sand, snow, mud, etc., use a tow strap or other device designed specifically for vehicle recovery. Always follow the manufacturer's instructions for the recovery device.

Rocking a stuck vehicle

⚠ WARNING

- **Stand clear of a stuck vehicle.**
- **Do not spin your tires at high speed. This could cause them to explode and result in serious injury. Parts of your vehicle could also overheat and be damaged.**

If your vehicle is stuck in sand, snow, mud, etc., use the following procedure:

1. Turn off the Vehicle Dynamic Control (VDC) system.
2. Make sure the area in front and behind the vehicle is clear of obstructions.
3. Turn the steering wheel right and left to clear an area around the front tires.
4. Slowly rock the vehicle forward and backward.
   - Shift back and forth between R (Reverse) and D (Drive).
   - Apply the accelerator as little as possible to maintain the rocking motion.
   - Release the accelerator pedal before shifting between R and D.
   - Do not spin the tires above 35 MPH (55 km/h).
5. If the vehicle cannot be freed after a few tries, contact a professional towing service to remove the vehicle.

MEMO

7 Appearance and care

Cleaning exterior 460
- Basic information 460
- Washing 460
- Waxing 461
- Removing spots 461
- Underbody 461
- Glass 461
- Wheels 461
- Chrome parts 462
- Tire dressing 462

Cleaning interior 463
- Basic information 463
- Air fresheners 463
- Floor mats 464
- Seat belts 465

Corrosion protection 465
- Most common factors contributing to vehicle corrosion 465
- Environmental factors influence the rate of corrosion 465
- To protect your vehicle from corrosion 466

CLEANING EXTERIOR

BASIC INFORMATION

In order to maintain the appearance of your vehicle, it is important to take proper care of it.

To protect the paint surface, wash your vehicle as soon as you can:

- after a rainfall to prevent possible damage from acid rain
- after driving on coastal roads
- when contaminants such as soot, bird droppings, tree sap, metal particles or bugs get on the paint surface
- when dust or mud builds up on the surface

Whenever possible, store or park your vehicle inside a garage or in a covered area.

When it is necessary to park outside, park in a shady area or protect the vehicle with a body cover.

Be careful not to scratch the paint surface when putting on or removing the body cover.

WASHING

Wash dirt off the vehicle with a wet sponge and plenty of water. Clean the vehicle thoroughly using a mild soap, a special vehicle soap or general purpose dishwashing liquid mixed with clean, lukewarm (never hot) water.

⚠ WARNING

- **Do not wash the engine compartment. Doing so may cause a failure in engine starting or a malfunction. The possibility of water intrusion into electrical connections may result in a short circuit or electrical components to malfunction.**
- **When using the step, the door should be opened. There is a risk of falling off the step if you use the step with the door closed.**

⚠ CAUTION

- **Do not concentrate water spray directly on the sonar sensors on the bumper as this will result in damage to the sensors.**
- **Do not use pressure washers capable of spraying water over 1,200 psi (8,274 kPa) to wash your vehicle. Use of high-pressure washers over 1,200 psi (8,274 kPa) can result in damage to or removal of paint or graphics. Avoid using a high-pressure washer closer than 12 in (30 cm) to the vehicle. Always use a wide-angle nozzle only, keep the nozzle moving and do not concentrate the water spray on any one area.**
- **Do not use car washes that use acid in the detergent. Some car washes, especially brushless ones, use some acid for cleaning. The acid may react with some plastic vehicle components, causing them to crack. This could affect their appearance, and also could cause them not to function properly. Always check with your car wash to confirm that acid is not used.**
- **Do not wash the vehicle with strong household soap, strong chemical detergents, gasoline or solvents.**
- **Do not wash the vehicle in direct sunlight or while the vehicle body is hot, as the surface may become water-spotted.**
- **Avoid using tight-napped or rough cloths, such as washing mitts. Care must be taken when removing caked-on dirt or other foreign substances so the paint surface is not scratched or damaged.**
- **Before washing the vehicle by an automatic car wash, make sure that the fuel-filler door is completely closed.**

Rinse the vehicle again with plenty of clean water.

Inside flanges, seams and folds on the doors, hatches and hood are particularly vulnerable to the effects of road salt. Therefore,

these areas must be regularly cleaned. Make sure that the drain holes in the lower edge of the door are open. Spray water under the body and in the wheel wells to loosen the dirt and wash away road salt.

Avoid leaving water spots on the paint surface by using a damp chamois to dry the vehicle.

WAXING

Regular waxing protects the paint surface and helps retain new vehicle appearance. Polishing is recommended to remove built-up wax residue and to avoid a weathered appearance before reapplying wax.

A NISSAN dealer can assist you in choosing the proper product.

- Wax your vehicle only after a thorough washing. Follow the instructions supplied with the wax.
- Do not use a wax containing any abrasives, cutting compounds or cleaners that may damage the vehicle finish.

Machine compound or aggressive polishing on a base coat/clear coat paint finish may dull the finish or leave swirl marks.

REMOVING SPOTS

Remove tar and oil spots, industrial dust, insects, and tree sap as quickly as possible from the paint surface to avoid lasting damage or staining. Special cleaning products are available at a NISSAN dealer or any automotive accessory stores.

UNDERBODY

In areas where road salt is used in winter, the underbody must be cleaned regularly. This will prevent dirt and salt from building up and causing the acceleration of corrosion on the underbody and suspension. Before the winter period and again in the spring, the underseal must be checked and, if necessary, re-treated.

GLASS

Use glass cleaner to remove smoke and dust film from the glass surfaces. It is normal for glass to become coated with a film after the vehicle is parked in the hot sun. Glass cleaner and a soft cloth will easily remove this film.

⚠ CAUTION

When cleaning the inside of the windows, do not use sharp-edged tools, abrasive cleaners or chlorine-based disinfectant cleaners. They could damage the electrical conductors, radio antenna elements or rear window defroster elements.

WHEELS

Basic information

Wash the wheels when washing the vehicle to maintain their appearance.

- Clean the inner side of the wheels when the wheel is changed or the underside of the vehicle is washed.
- Inspect wheel rims regularly for dents or corrosion. Such damage may cause loss of pressure or poor seal at the tire bead.
- NISSAN recommends that the road wheels be waxed to protect against road salt in areas where it is used during winter.

⚠ CAUTION

Do not use abrasive cleaners when washing the wheels.

Aluminum alloy wheels

Wash regularly with a sponge dampened in a mild soap solution, especially during winter months in areas where road salt is used. Salt could discolor the wheels if not removed.

⚠ CAUTION

Follow the directions below to avoid staining or discoloring the wheels:

- **Do not use a cleaner that uses strong acid or alkali contents to clean the wheels.**

- **Do not apply wheel cleaners to the wheels when they are hot. The wheel temperature should be the same as ambient temperature.**
- **Rinse the wheel to completely remove the cleaner within 15 minutes after the cleaner is applied.**

Bright wheels (if so equipped)

The bright wheels use a different coating process than typical aluminum alloy wheel and they are not plated wheels. These wheels are clear-coated and require the following special cleaning. They should be regularly washed with a soft sponge soaked in a lot of water. After washing with water, wipe clean with a dry, soft cloth and dry completely. When there is chemical or tire wax, or dirt such as an antifreeze agent on the surface, wash them with water as soon as possible.

⚠ CAUTION

- **The surfaces of the wheels use a different coating process than typical aluminum alloy wheels. Do not use aluminum alloy wheel cleaners or abrasive cleaners to clean the wheels. Using such cleaners could damage the wheel surfaces.**
- **Do not use an automatic car wash if the vehicle is equipped with bright wheels. The wheel coating may be damaged.**
- **Do not use a brush to wash the wheels if the vehicle is equipped with bright wheels. The wheel coating may be damaged.**

CHROME PARTS

- When chrome parts are excessively dirty, clean the parts using a mild soap, a special vehicle soap, or common dish detergent mixed with clean lukewarm (never hot) water, and rinse with plenty of water.
- Wipe off remaining water so that no water droplets remain.
- Clean oil stains using alcohol wet wipes. Be careful not to get the alcohol on other parts.
- Wax application to Chrome parts can help prevent oxidation.

NOTE:

- **Depending on the models, dark chrome parts may be used. Water stains are more noticeable on dark chrome parts than on bright (normal) chrome parts.**
- **Do not scrub too hard when removing water stains. Use a commercially available water stain remover.**

TIRE DRESSING

NISSAN does not recommend the use of tire dressings. Tire manufacturers apply a coating to the tires to help reduce discoloration of the rubber. If a tire dressing is applied to the tires, it may react with the coating and form a compound. This compound may come off the tire while driving and stain the vehicle paint.

If you choose to use a tire dressing, take the following precautions:

- Use a water-based tire dressing. The coating on the tire dissolves more easily with an oil-based tire dressing.
- Apply a light coat of tire dressing to help prevent it from entering the tire tread/grooves (where it would be difficult to remove).
- Wipe off excess tire dressing using a dry towel. Make sure the tire dressing is completely removed from the tire tread/grooves.
- Allow the tire dressing to dry as recommended by tire dressing manufacturer.

BASIC INFORMATION

Occasionally remove loose dust from the interior trim, plastic parts and seats using a vacuum cleaner or soft bristled brush. Wipe the vinyl and leather surfaces with a clean, soft cloth dampened in mild soap solution, then wipe clean with a dry soft cloth.

Regular care and cleaning is required in order to maintain the appearance of the leather.

Before using any fabric protector, read the manufacturer's recommendations. Some fabric protectors contain chemicals that may stain or bleach the seat material.

Use a cloth dampened only with water, to clean the meter and gauge lens.

⚠ WARNING

- **Do not use wax or silicone based products in the interior of the vehicle. Doing so may cause damage to interior parts, electrical devices, or electronics.**
- **Do not use water or acidic cleaners (hot steam cleaners) on the seat. This can damage the seat or occupant classification sensors. This can also affect the operation of the air bag system and result in serious personal injury.**

⚠ CAUTION

- **Never use benzine, thinner, or any similar material.**
- **For cleaning, use a soft cloth, dampened with water. Never use a rough cloth, alcohol, benzine, thinner or any kind of solvent or paper towel with a chemical cleaning agent. They will scratch or cause discoloration to the lens.**
- **Do not spray any liquid such as water on the meter lens. Spraying liquid may cause the system to malfunction.**
- **Small dirt particles can be abrasive and damaging to the leather surfaces and should be removed promptly. Do not use saddle soap, car waxes, polishes, oils, cleaning fluids, solvents, detergents or ammonia-based cleaners as they may damage the leather's natural finish.**
- **Only use fabric protectors approved by NISSAN.**
- **Do not use glass or plastic cleaner on meter or gauge lens covers. It may damage the lens cover.**
- **Do not spill on or make contact with interior surfaces while handling air fresheners, aroma agents, cosmetics, sunscreen, etc. They may cause permanent discoloration, stain, crack, paint peeling, etc. depending on the ingredients. If they contact the interior surface, wipe them off immediately using a soft cloth.**
- **Do not use the chlorine-based cleaning liquid such as chlorine dioxide and hypochlorous acid, which may cause the paint peeling, corrosion, etc. If it is unavoidable to clean or sterilize interior surfaces, use less than 75% ethanol. Wipe the interior parts with a dry cloth dampened with ethanol. Wipe off ethanol completely. If you leave it uncleaned, it may cause paint peeling, discoloration, etc. Since ethanol is flammable, be careful of fire.**
- **Never use chloride solutions for cleaning aluminum decoratives (if so equipped), damage may occur.**

AIR FRESHENERS

Most air fresheners use a solvent that could affect the vehicle interior. If you use an air freshener, take the following precautions:

- Hanging-type air fresheners can cause permanent discoloration when they contact vehicle interior surfaces. Place

the air freshener in a location that allows it to hang free and not contact an interior surface.
- Liquid-type air fresheners typically clip on the vents. These products can cause immediate damage and discoloration when spilled on interior surfaces.

Carefully read and follow the manufacturer's instructions before using air fresheners.

FLOOR MATS

Basic information

⚠ WARNING

To avoid potential pedal interference that may result in a collision, injury or death:

- **NEVER place a floor mat on top of another floor mat in the driver front position or install them upside down or backwards.**
- **Use only genuine NISSAN floor mats or equivalent floor mats that are specifically designed for use in your vehicle model and model year.**
- **Properly position the mats in the floorwell using the floor mat positioning hooks. See "Floor mat installation" (P.464).**
- **Make sure the floor mat does not interfere with pedal operation.**
- **Periodically check the floor mats to make sure they are properly installed.**
- **After cleaning the vehicle interior, check the floor mats to make sure they are properly installed.**

The use of genuine NISSAN floor mats can extend the life of your vehicle carpet and make it easier to clean the interior. Mats should be maintained with regular cleaning and replaced if they become excessively worn.

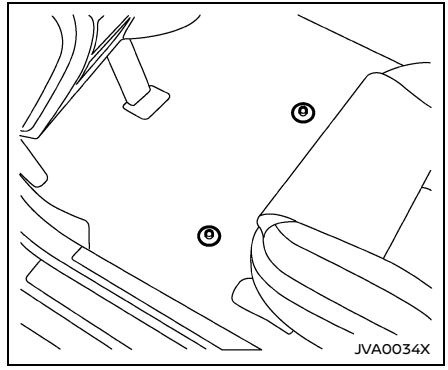

Front (example)

Floor mat installation

Your vehicle is equipped with floor mat positioning hook(s). The number and shape of the floor mat positioning hooks for each seating position varies depending on the vehicle.

When installing genuine NISSAN floor mats, follow the installation instructions provided with the floor mat and the following:

1. Position the floor mat in the floorwell so that the mat grommet holes are aligned with the hook(s).
2. Secure the grommet holes into the hook(s) and ensure that the floor mat is properly positioned.

3. Make sure the floor mat does not interfere with pedal operation. With the ignition in the OFF position and the shift button in the P (Park) position, fully apply and release all pedals. The floor mat must not interfere with pedal operation or prevent the pedal from returning to its normal position. It is recommended you see a NISSAN dealer for details about installing the floor mats in your vehicle.

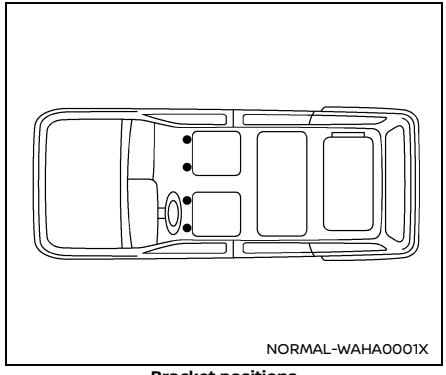

Bracket positions

The illustration shows the location of the floor mat positioning hooks.

SEAT BELTS

The seat belts can be cleaned by wiping them with a sponge dampened in a mild soap solution. Allow the belts to dry completely before using them.

See "Seat belts" (P.35).

⚠ WARNING

Do not allow wet seat belts to roll up in the retractor. NEVER use bleach, dye, or chemical solvents to clean the seat belts, since these materials may severely weaken the seat belt webbing.

MOST COMMON FACTORS CONTRIBUTING TO VEHICLE CORROSION

- The accumulation of moisture-retaining dirt and debris in body panel sections, cavities, and other areas.
- Damage to paint and other protective coatings caused by gravel and stone chips or minor traffic accidents.

ENVIRONMENTAL FACTORS INFLUENCE THE RATE OF CORROSION

Moisture

Accumulation of sand, dirt and water on the vehicle body underside can accelerate corrosion. Wet floor coverings will not dry completely inside the vehicle, and should be removed for drying to avoid floor panel corrosion.

Relative humidity

Corrosion will be accelerated in areas of high relative humidity, especially those areas where the temperatures stay above freezing where atmospheric pollution exists, or where road salt is used.

Temperature

A temperature increase will accelerate the rate of corrosion to those parts which are not well ventilated.

Air pollution

Industrial pollution, the presence of salt in the air in coastal areas, or heavy road salt use will accelerate the corrosion process. Road salt will also accelerate the disintegration of paint surfaces.

TO PROTECT YOUR VEHICLE FROM CORROSION

- Wash and wax your vehicle often to keep the vehicle clean.
- Always check for minor damage to the paint and repair it as soon as possible.
- Keep drain holes at the bottom of the doors open to avoid water accumulation.
- Check the underbody for accumulation of sand, dirt or salt. If present, wash with water as soon as possible.

⚠ CAUTION

- **NEVER remove dirt, sand or other debris from the passenger compartment by washing it out with a hose. Remove dirt with a vacuum cleaner.**
- **Never allow water or other liquids to come in contact with electronic components inside the vehicle as this may damage them.**

Chemicals used for road surface deicing are extremely corrosive. They accelerate corrosion and deterioration of underbody components such as the exhaust system, fuel and brake lines, brake cables, floor pan and fenders.

In winter, the underbody must be cleaned periodically.

For additional protection against rust and corrosion, which may be required in some areas, it is recommended you consult a NISSAN dealer.

8 Do-it-yourself

Maintenance precautions 468
Engine compartment check locations 469
VR35DDTT engine 469
Engine cooling system 469
Basic information 469
Checking engine coolant level 470
Changing engine coolant 471
Engine oil 471
Checking engine oil level 471
Changing engine oil and filter 472
Automatic Transmission Fluid (ATF) 474
Brake fluid 474
Basic information 474
Brake fluid 475
Window washer fluid 475
Battery 476
Basic information 476
Jump starting 477
Variable voltage control system 478
Drive belts 478
Spark plugs 479
Basic information 479
Replacing spark plugs 479
Air cleaner 480
Windshield wiper blades 480
Cleaning 480
Replacing 481
Rear window wiper blades 481
Brakes 482
Basic information 482
Self-adjusting brakes 482
Brake pad wear warning 482
Fuses 482
Engine compartment 482
Passenger compartment 484
Intelligent Key battery replacement 486
Lights 489
Basic information 489
Headlights and rear combination lights 489
Exterior and interior lights 489
Wheels and tires 490
Basic information 490
Tire pressure 490
Tire labeling 494
Types of tires 497
Tire chains 498
Changing wheels and tires 498

MAINTENANCE PRECAUTIONS

When performing any inspection or maintenance work on your vehicle, always take care to prevent serious accidental injury to yourself or damage to the vehicle. The following are general precautions which should be closely observed.

⚠ WARNING

- **Park the vehicle on a level surface, apply the parking brake securely and block the wheels to prevent the vehicle from moving. Select the transmission in P (Park) position.**
- **Be sure the ignition switch is in the OFF position when performing any parts replacement or repairs.**
- **Never connect or disconnect the battery or any transistorized component while the ignition switch is in the ON position.**
- **Never leave the engine or automatic transmission related component harnesses disconnected while the ignition switch is in the ON position.**
- **If you must work with the engine running, keep your hands, clothing, hair and tools away from moving fans, belts and any other moving parts.**
- **It is advisable to secure or remove any loose clothing and remove any jewelry, such as rings, watches, etc. before working on your vehicle.**
- **Always wear eye protection whenever you work on your vehicle.**
- **If you must run the engine in an enclosed space such as a garage, be sure there is proper ventilation for exhaust gases to escape.**
- **Never get under the vehicle while it is supported only by a jack. If it is necessary to work under the vehicle, support it with safety stands.**
- **Keep smoking materials, flame and sparks away from fuel tank and the battery.**
- **Your vehicle is equipped with an automatic engine cooling fan. It may come on at any time without warning, even if the ignition key is in the OFF position and the engine is not running. To avoid injury, always disconnect the negative battery cable before working near the fan.**
- **On gasoline engine models, the fuel filter or fuel lines should be serviced because the fuel lines are under high pressure even when the engine is off. It is recommended you visit a NISSAN dealer for this service.**

⚠ CAUTION

- **Do not work under the hood while the engine is hot. Turn the engine off and wait until it cools down.**
- **Avoid direct contact with used engine oil and coolant. Improperly disposed engine oil, coolant, and/or other vehicle fluids can damage the environment. Always conform to local regulations for disposal of vehicle fluid.**

This "8. Do-it-yourself" section gives instructions regarding only those items which are relatively easy for an owner to perform.

A genuine NISSAN Service Manual is also available. (See "Owner's manual/service manual order information" (P.560).)

You should be aware that incomplete or improper servicing may result in operating difficulties or excessive emissions, and could affect your warranty coverage. **If in doubt about any servicing, it is recommended you have it done by a NISSAN dealer.**

ENGINE COMPARTMENT CHECK LOCATIONS

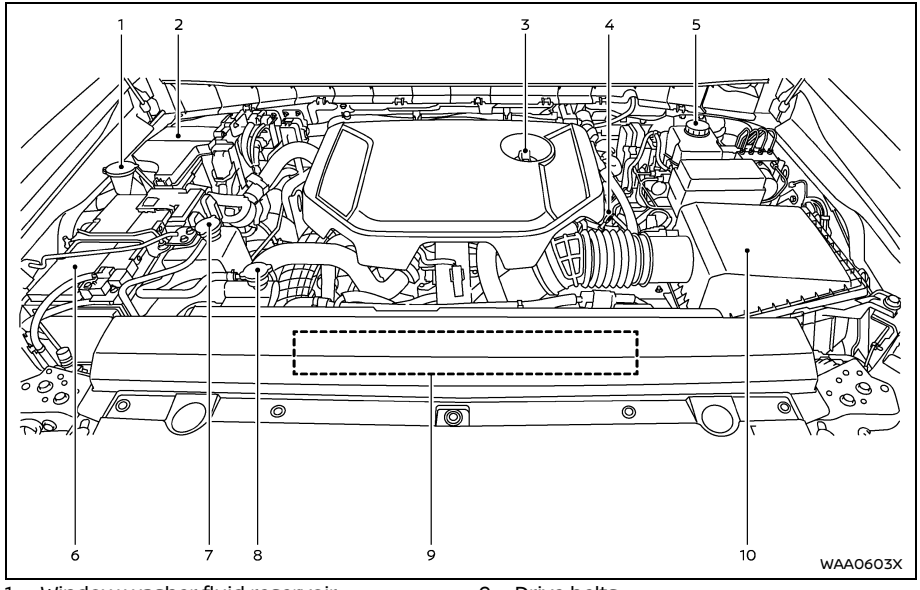

1. Window washer fluid reservoir
2. Fuse/fusible link holder
3. Engine oil filler cap
4. Engine oil dipstick
5. Brake fluid reservoir
6. Battery
7. Engine coolant reservoir
8. Radiator filler cap
9. Drive belts
10. Air cleaner

VR35DDTT ENGINE

NOTE:
Your vehicle may not be equipped with an engine cover.

ENGINE COOLING SYSTEM

BASIC INFORMATION

The engine cooling system is filled at the factory with a pre-diluted mixture of 50% Genuine NISSAN Long Life Antifreeze/Coolant (blue) and 50% water to provide year-round anti-freeze and coolant protection. The antifreeze solution contains rust and corrosion inhibitors. Additional engine cooling system additives are not necessary.

⚠ WARNING

- **Never remove the radiator or coolant reservoir cap when the engine is hot. Wait until the engine and radiator cool down. Serious burns could be caused by high pressure fluid escaping from the radiator. See precautions in "If your vehicle overheats" (P.453).**
- **The radiator is equipped with a pressure type radiator cap. To prevent engine damage, use only a genuine NISSAN radiator cap.**

⚠ CAUTION

- **Never use any cooling system additives such as radiator sealer. Additives may clog the cooling system and cause damage to the engine, transmission and/or cooling system.**

- **When adding or replacing coolant, be sure to use only Genuine NISSAN Long Life Antifreeze/Coolant (blue) or equivalent. Genuine NISSAN Long Life Antifreeze/Coolant (blue) is pre-diluted to provide antifreeze protection to −34°F (−37°C). If additional freeze protection is needed due to weather where you operate your vehicle, add Genuine NISSAN Long Life Antifreeze/Coolant (blue) concentrate following the directions on the container. If an equivalent coolant other than Genuine NISSAN Long Life Antifreeze/Coolant (blue) is used, follow the coolant manufacturer's instructions to maintain minimum antifreeze protection to −34°F (−37°C). The use of other types of coolant solutions other than Genuine NISSAN Long Life Antifreeze/Coolant (blue) or equivalent may damage the engine cooling system.**
- **The life expectancy of the factory-fill coolant is 105,000 miles (168,000 km) or 7 years. Mixing any other type of coolant other than Genuine NISSAN Long Life Antifreeze/Coolant (blue) (or equivalent coolant), including Genuine NISSAN Long Life Antifreeze/Coolant (green), or the use of non-distilled water will reduce the life expectancy of the factory-fill coolant. Refer to the "9. Maintenance and schedules" section for more details.**

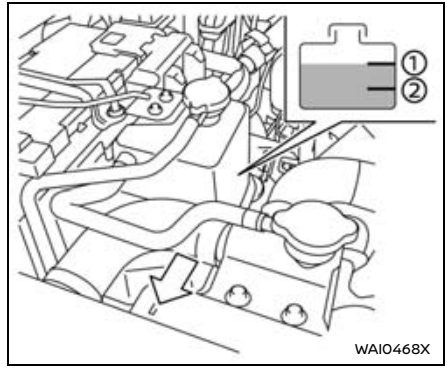

CHECKING ENGINE COOLANT LEVEL

Check the coolant level **in the reservoir when the engine is cold.** If the coolant level is below MIN ②, open the reservoir tank cap and add coolant up to the MAX ① level. If the reservoir tank is empty, check the coolant level in the radiator **when the engine is cold.** If there is insufficient coolant in the radiator, fill the radiator with coolant up to the filler opening and also add it to the reservoir tank up to the MAX level ①.

Tighten the cap securely after adding engine coolant.

If the cooling system requires coolant frequently, have it checked. It is recommended you visit a NISSAN dealer for this service.

⚠ WARNING

When adding the coolant to the reservoir tank, only open the engine coolant reservoir tank cap. Never open the radiator filler cap and the engine coolant reservoir tank cap at the same time.

(See "Engine compartment check locations" (P.469).)

CHANGING ENGINE COOLANT

It is recommended that major cooling system repairs be performed by a NISSAN dealer. The service procedures can be found in the appropriate NISSAN Service Manual.

Improper servicing can result in reduced heater performance and engine overheating.

⚠ WARNING

- **To avoid the danger of being scalded, never change the coolant when the engine is hot.**
- **Never remove the radiator cap or coolant reservoir cap when the engine is hot. Serious burns could be caused by high pressure fluid escaping from the radiator.**
- **Avoid direct skin contact with used coolant. If skin contact is made, wash thoroughly with soap or hand cleaner as soon as possible.**
- **Keep coolant out of reach of children and pets.**

Engine coolant must be disposed of properly. Check your local regulations.

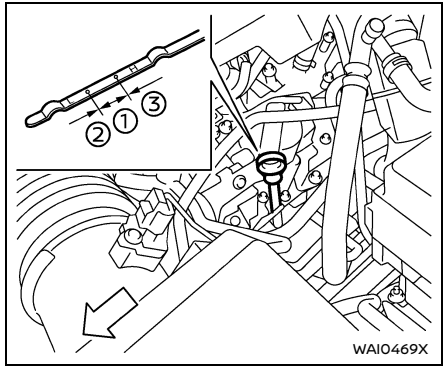

CHECKING ENGINE OIL LEVEL

1. Park the vehicle on a level surface and apply the parking brake.
2. Run the engine until it reaches operating temperature.
3. Turn off the engine. **Wait more than 10 minutes for the oil to drain back into the oil pan.**
4. Remove the dipstick and wipe it clean. Reinsert it all the way.
5. Remove the dipstick again and check the oil level. It should be within the range ①. If the oil level is below ②, remove the oil filler cap and pour recommended oil through the opening. **Do not overfill ③.**
6. Recheck oil level with the dipstick.

It is normal to add some oil between oil maintenance intervals or during the

break-in period, depending on the severity of operating conditions.

⚠ CAUTION

Oil level should be checked regularly. Operating the engine with an insufficient amount of oil can damage the engine, and such damage is not covered by warranty.

CHANGING ENGINE OIL AND FILTER

Vehicle set-up

1. Park the vehicle on a level surface and apply the parking brake.
2. Run the engine until it reaches operating temperature.
3. Turn the engine off and wait more than 15 minutes.
4. Raise and support the vehicle using a suitable floor jack and safety jack stands.
   - Place the safety jack stands under the vehicle jack-up points.
   - A suitable adapter should be attached to the jack stand saddle.
5. Remove the engine undercover.
   - Remove the bolts that hold the undercover in place.

⚠ CAUTION

Make sure the correct lifting and support points are used to avoid vehicle damage.

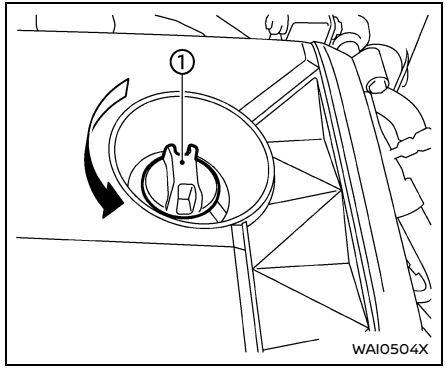

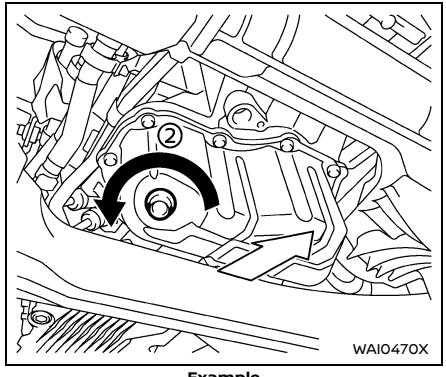

Example

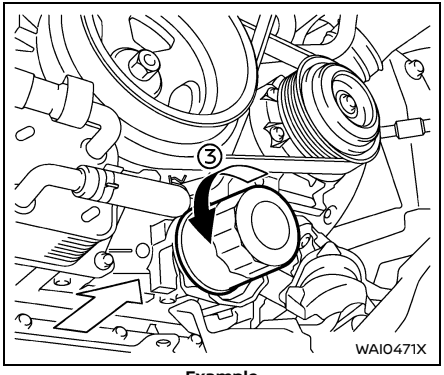

Example

Engine oil and filter

1. Place a large drain pan under the drain plug.
2. Remove the oil filler cap ①.
3. Remove the drain plug ② with a wrench and completely drain the oil.

⚠ CAUTION

Be careful not to burn yourself, as the engine oil is hot.

- **Waste oil must be disposed of properly.**
- **Check your local regulations.**

4. (Perform steps 4 to 7 only when the engine oil filter change is needed.)
   Loosen the oil filter ③ with an oil filter wrench. Remove the oil filter by turning it by hand.
5. Wipe the engine oil filter mounting surface with a clean rag.

⚠ CAUTION

- **Be sure to remove any old gasket material remaining on the sealing surface of the engine. Failure to do so could lead to an oil leak and engine damage.**
- **The dipstick must be inserted in place to prevent oil spillage from the dipstick hole while filling the engine with oil.**

6. Coat the gasket on the new filter with clean engine oil.
7. Screw in the oil filter clockwise until a slight resistance is felt, then tighten additionally more than 2/3 turn.

   Oil filter tightening torque:

   11 to 15 ft-lb

   (15 to 21 N·m)

8. Clean and re-install the drain plug with a new washer. Securely tighten the drain plug with a wrench.

   Drain plug tightening torque:

   22 to 29 ft-lb

   (29.4 to 39.2 N·m)

   Do not use excessive force.
9. Refill engine with recommended oil and install the oil filler cap securely.
   See "Capacities and recommended fluids/lubricants" (P.523) for drain and refill capacity. The drain and refill capacity depends on the oil temperature and drain time. Use these specifications for reference only. Always use the dipstick to determine the proper amount of oil in the engine.
10. Start the engine and check for leakage around the drain plug and the oil filter. Correct as required.
11. Turn the engine off and wait more than 15 minutes. Check the oil level with the dipstick. Add engine oil if necessary.

After the operation

1. Reinstall undercover in reverse order of removal.
2. Lower the vehicle carefully to the ground.
3. Dispose of waste oil and filter properly.

⚠ WARNING

- **Prolonged and repeated contact with used engine oil may cause skin cancer.**

- **Try to avoid direct skin contact with used oil. If skin contact is made, wash thoroughly with soap or hand cleaner as soon as possible.**
- **Keep used engine oil out of reach of children.**

AUTOMATIC TRANSMISSION FLUID (ATF)

When checking or replacement is required, we recommend a NISSAN dealer for servicing.

⚠ CAUTION

- **It is recommended that you use only Genuine NISSAN Matic P ATF. Do not mix with other fluids.**
- **Using automatic transmission fluid other than Genuine NISSAN Matic P ATF may cause deterioration in driveability and automatic transmission durability, and may damage the automatic transmission. Damage caused by the use of fluid other than as recommended is not covered by the NISSAN new vehicle limited warranty.**

BRAKE FLUID

BASIC INFORMATION

For further brake fluid specification information, see "Capacities and recommended fluids/lubricants" (P.523).

⚠ WARNING

- **Use only new fluid from a sealed container. Old, inferior or contaminated fluid may damage the brake system. The use of improper fluids can damage the brake system and affect the vehicle's stopping ability.**
- **Be sure to clean the filler cap before removing.**
- **Brake fluid is poisonous and should be stored carefully in marked containers out of the reach of children.**

⚠ CAUTION

- **Do not add brake fluid with the ignition switch in the ON position or the engine running. Doing so could make the brake fluid overfill when the ignition switch is turned off.**
- **Do not spill the fluid on painted surfaces. This will damage the paint. If fluid is spilled, wash the surface with water.**

WINDOW WASHER FLUID

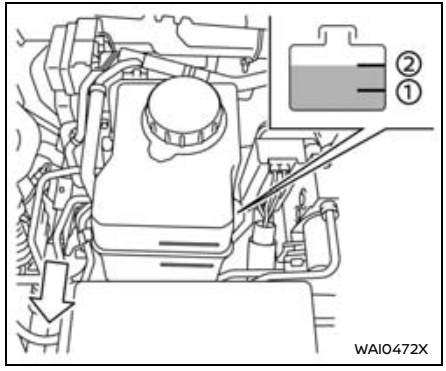

BRAKE FLUID

Check the fluid level in the reservoir between MIN ① and MAX ② lines. If the brake warning light comes on or fluid must be added frequently, the system should be checked. It is recommended you visit a NISSAN dealer for this service.

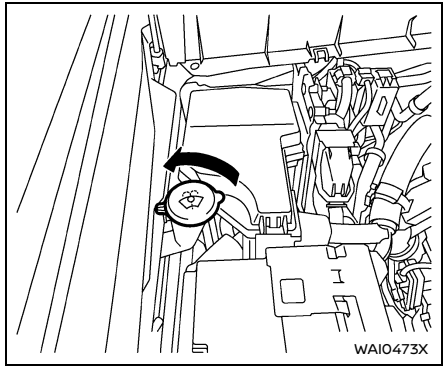

⚠ WARNING

Antifreeze is poisonous and should be stored carefully in marked containers out of the reach of children.

Fill the window washer fluid reservoir periodically. Add window washer fluid when the low window washer fluid warning illuminates.

To fill the window washer fluid reservoir, lift the cap off the reservoir tank and pour the window washer fluid into the tank opening.

Add a washer solvent to the washer for better cleaning. In the winter season, add a windshield washer antifreeze. Follow the manufacturer's instructions for the mixture ratio.

Refill the reservoir more frequently when driving conditions require an increased amount of window washer fluid.

Recommended fluid is Genuine NISSAN Windshield Washer Concentrate Cleaner & Antifreeze or equivalent.

⚠ CAUTION

- **Do not substitute engine anti-freeze coolant for window washer solution. This may result in damage to the paint.**
- **Do not fill the window washer reservoir tank with washer fluid concentrates at full strength. Some methyl alcohol based washer fluid concentrates may permanently stain the grille if spilled while filling the window washer reservoir tank.**
- **Pre-mix washer fluid concentrates with water to the manufacturer's recommended levels before pouring the fluid into the window washer reservoir tank. Do not use the window washer reservoir tank to mix the washer fluid concentrate and water.**

BATTERY

BASIC INFORMATION

Caution symbols for battery:

- No smoking, No exposed flames, No sparks



WARNING

- **Do not expose the battery to electrical sparks, flames or smoking. Hydrogen gas generated by the battery is explosive. Explosive gases can cause blindness or injury.**

- Shield eyes



WARNING

- **Handle the battery cautiously. Always wear eye protection glasses to protect against explosion or battery acid.**

- Keep away from children



WARNING

- **Never allow children to handle the battery. Keep the battery out of the reach of children.**

- Battery acid



WARNING

- **Do not allow battery fluid to contact your skin, eyes, fabrics, or painted surfaces. Sulfuric acid can cause blindness or severe burns. After touching a battery or battery cap, do not touch or rub your eyes. Thoroughly wash your hands. If the acid contacts your eyes, skin or clothing, immediately flush with water for at least 15 minutes and seek medical attention. Battery fluid is acid. If the battery fluid gets into your eyes or onto your skin, it could cause loss of your eyesight or burns.**

- Note operating instructions



WARNING

- **Before handling the battery, read this instruction carefully to ensure correct and safe handling.**

- Explosive gas



WARNING

- **Hydrogen gas generated by battery fluid is explosive. Explosive gases can cause blindness or injury.**

- If the battery is labeled “do not open” it is maintenance free and battery fluid should not be checked. It is recommended that you visit a NISSAN dealer or a qualified specialist workshop to confirm the battery’s performance.
- Keep the battery surface clean and dry. Clean the battery with a solution of baking soda and water.
- Make certain the terminal connections are clean and securely tightened.
- If the vehicle is not to be used for 30 days or longer, disconnect the negative ⊖ battery terminal cable to prevent discharging it.

NOTE:
Care should be taken to avoid situations that can lead to potential battery discharge and potential no-start conditions such as:

1. **Installation or extended use of electronic accessories that consume battery power when the engine is not running (Phone chargers, GPS, DVD players, etc.).**
2. **Vehicle is not driven regularly and/or only driven short distances.**

In these cases, the battery may need to be charged to maintain battery health.

⚠ WARNING

- **Do not expose the battery to flames or electrical sparks. Hydrogen gas generated by the battery is explosive. Do not allow battery fluid to contact your skin, eyes, fabrics or painted surfaces. After touching a battery or battery cap, do not touch or rub your eyes. Thoroughly wash your hands. If the acid contacts your eyes, skin or clothing, immediately flush with water for at least 15 minutes and seek medical attention.**
- **When working on or near a battery, always wear suitable eye protection and remove all jewelry.**
- **Battery posts, terminals and related accessories contain lead and lead compounds. Wash hands after handling.**
- **Keep the battery out of the reach of children.**
- **Do not tip the battery.**

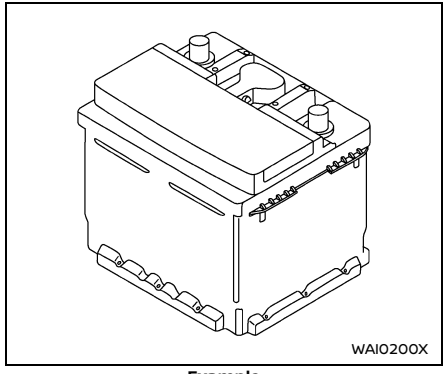

Example

NOTE:
Do not try to open the top of the battery.
This battery is not equipped with removable vent caps.

JUMP STARTING

If jump starting is necessary, see "Jump starting" (P.451). If the engine does not start by jump starting, the battery may have to be replaced. It is recommended you visit a NISSAN dealer for this service.

VARIABLE VOLTAGE CONTROL SYSTEM

CAUTION

- **Do not ground accessories directly to the battery terminal. Doing so will bypass the variable voltage control system and the vehicle battery may not charge completely.**
- **Use electrical accessories with the engine running to avoid discharging the vehicle battery.**

The variable voltage control system measures the amount of electrical discharge from the battery and controls voltage generated by the generator.

DRIVE BELTS

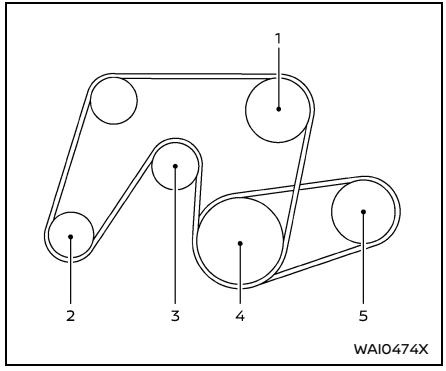

1. Water pump
2. Alternator
3. Drive belt auto tensioner
4. Crankshaft pulley
5. Air conditioner compressor

WARNING

Be sure the ignition switch is in the OFF position before servicing drive belts. The engine could rotate unexpectedly.

1. Visually inspect each belt for signs of unusual wear, cuts or fraying. If the belt is in poor condition, have it replaced. It is recommended you visit a NISSAN dealer for this service.
2. Have the belts checked regularly for condition in accordance with the maintenance schedule shown in the "9. Maintenance and schedules" section.

SPARK PLUGS

BASIC INFORMATION

WARNING

Be sure the engine and the ignition switch are off and that the parking brake is engaged securely.

CAUTION

Be sure to use the correct socket to remove the spark plugs. An incorrect socket can damage the spark plugs.

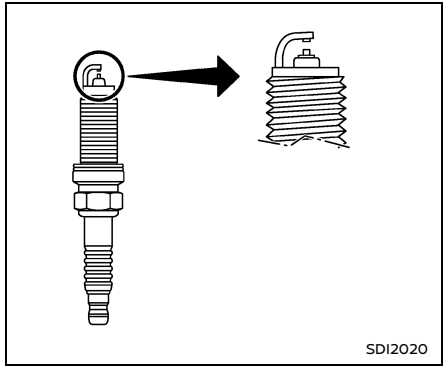

REPLACING SPARK PLUGS

Basic information

If replacement is required, it is recommended you visit a NISSAN dealer for this service.

Iridium platinum-tipped spark plugs

It is not necessary to replace the iridium platinum-tipped spark plugs as frequently as the conventional type spark plugs since they will last much longer. Follow the maintenance schedule shown in the "*9. Maintenance and schedules*" section, but do not reuse them by cleaning or regapping.

Always replace spark plugs with recommended or equivalent ones.

AIR CLEANER

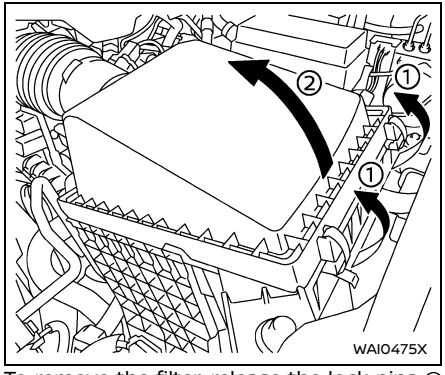

To remove the filter, release the lock pins ① and pull the unit upward ②.

The filter element should not be cleaned and reused. Replace it according to the maintenance intervals. See "9. Maintenance and schedules" section for maintenance intervals. When replacing the filter, wipe the inside of the air cleaner housing and the cover with a damp cloth.

⚠ WARNING

- **Operating the engine with the air cleaner removed can cause you or others to be burned. The air cleaner not only cleans the air, it stops flame if the engine backfires. If it isn't there, and the engine backfires, you could be burned. Do not drive with the air cleaner removed, and be careful when working on the engine with the air cleaner removed.**
- **Never pour fuel into the throttle body or attempt to start the engine with the air cleaner removed. Doing so could result in serious injury.**

WINDSHIELD WIPER BLADES

CLEANING

Basic information

If your windshield is not clear after using the windshield washer or if a wiper blade chatters when running, wax or other material may be on the blade or windshield.

Clean the outside of the windshield with a washer solution or a mild detergent. Your windshield is clean if beads do not form when rinsing with clear water.

Clean each blade by wiping it with a cloth soaked in a washer solution or a mild detergent. Then rinse the blade with clear water. If your windshield is still not clear after cleaning the blades and using the wiper, replace the blades.

Worn windshield wiper blades can damage the windshield and impair driver vision.

When a washer nozzle is clogged

It is recommended you see a NISSAN dealer if a washer nozzle is clogged or any malfunction occurs. Do not attempt to clean the nozzle using a needle or a pin. Doing so may damage the nozzle.

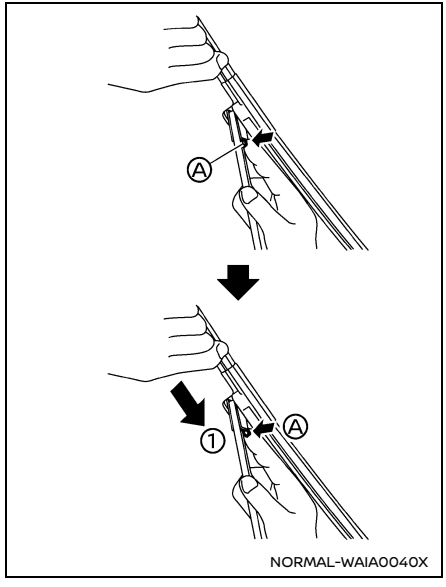

REPLACING

Replace the wiper blades if they are worn.

1. Pull up the wiper arms (first driver's side, then passenger's side).
2. Push the release tab Ⓐ, and then move the wiper blade down the wiper arm ① while pushing the release tab to remove.
3. Insert the new wiper blade onto the wiper arm until a click sounds.
4. Rotate the wiper blade so the dimple is in the groove.

⚠ CAUTION

- **After wiper blade replacement, return the wiper arm to its original position;**
  otherwise it may be damaged when the hood is opened.
- **Make sure the wiper blades contact the glass; otherwise the arm may be damaged from wind pressure.**

It is recommended you visit a NISSAN dealer if checking or replacement is required.

For the rear window wiper service position, see "Rear window wiper and washer operation" (P.153).

BRAKES

BASIC INFORMATION

If the brakes do not operate properly, have the brakes checked. It is recommended that you visit a NISSAN dealer for this service.

SELF-ADJUSTING BRAKES

Your vehicle is equipped with self-adjusting brakes.

The disc-type brakes self-adjust every time the brake pedal is applied.

⚠ WARNING

Have your brake system checked if the brake pedal height does not return to normal. It is recommended you visit a NISSAN dealer for this service.

BRAKE PAD WEAR WARNING

The disc brake pads have audible wear warnings. When a brake pad requires replacement, it will make a high pitched scraping sound when the vehicle is in motion. This scraping sound will first occur only when the brake pedal is depressed. After more wear of the brake pad, the sound will always be heard even if the brake pedal is not depressed. Have the brakes checked as soon as possible if the wear warning sound is heard.

Under some driving or climate conditions, occasional brake squeak, squeal or other noise may be heard. Occasional brake noise during light to moderate stops is normal and does not affect the function or performance of the brake system.

Proper brake inspection intervals should be followed. For additional information, see the maintenance schedules shown in the "9. Maintenance and schedules" section.

FUSES

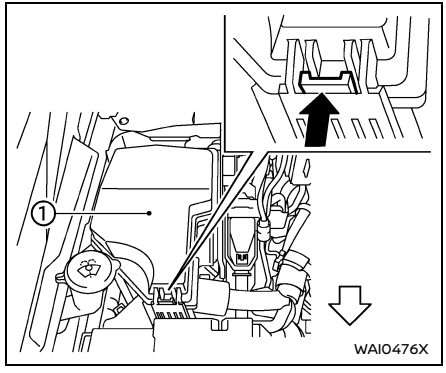

ENGINE COMPARTMENT

Basic information

⚠ WARNING

Never use a fuse of a higher or lower amperage rating than that specified on the fuse box cover. This could damage the electrical system or electronic control units or cause a fire.

If any electrical equipment does not operate, check for an open fuse.

1. Be sure the ignition switch is pushed to the OFF position and the headlights are off. (See "Headlight switch" (P.155).)

2. Open the engine hood.
3. Remove the fuse/fusible link holder cover ①.
4. Remove the fuse with the fuse puller.

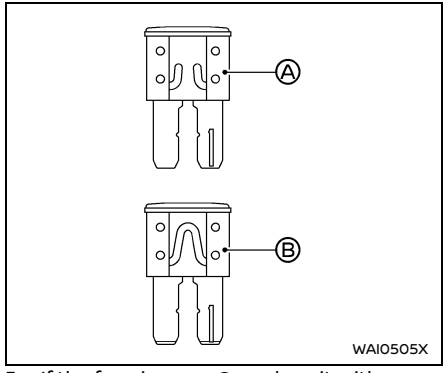

5. If the fuse is open Ⓐ, replace it with a new fuse Ⓑ. Spare fuses are stored in the passenger compartment fuse box.
6. If a new fuse also opens, have the electrical system checked and repaired. It is recommended you visit a NISSAN dealer for this service.

Fusible links

If any electrical equipment does not operate and fuses are in good condition, check the fusible links. If any of these fusible links are melted, replace only with genuine NISSAN parts.

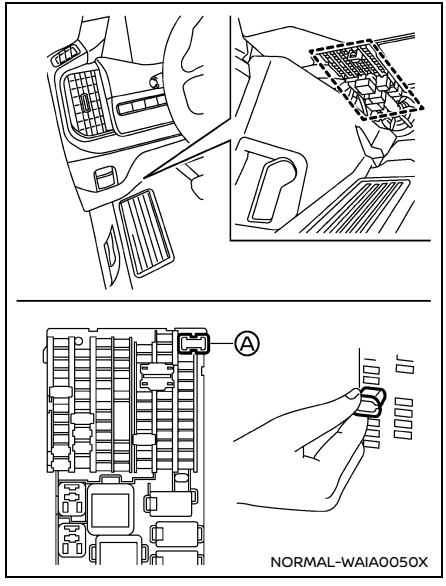

PASSENGER COMPARTMENT

Basic information

⚠ WARNING

Never use a fuse of a higher or lower amperage rating than that specified on the fuse box diagram. This could damage the electrical system or electronic control units or cause a fire.

If any electrical equipment does not operate, check for an open fuse.

1. Be sure the ignition switch is pushed to the OFF position and the headlights are off.
2. Remove the fuse with the fuse puller Ⓐ.
3. If the fuse is open, replace it with a new fuse.
4. If a new fuse also opens, have the electrical system checked and repaired. It is recommended you visit a NISSAN dealer for this service. Spare fuses are stored in the fuse box.

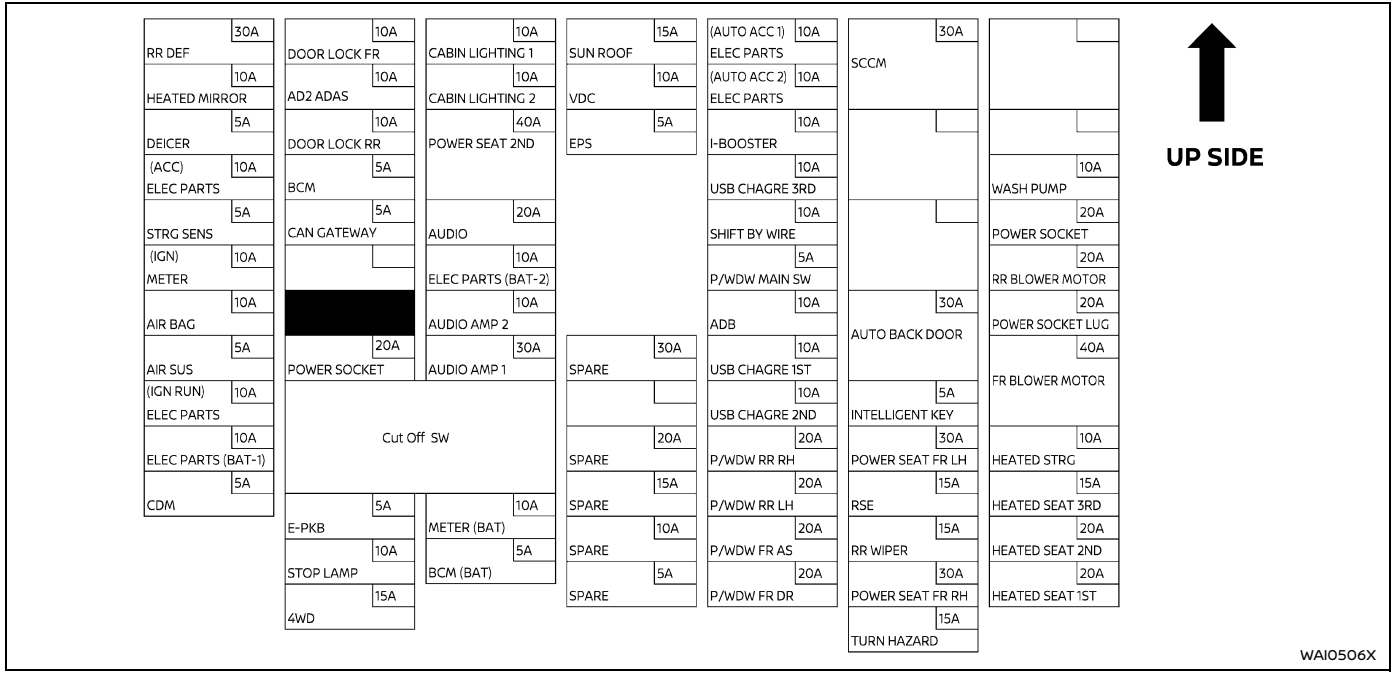
30A
RR DEF
10A
HEATED MIRROR
5A
DEICER
(ACC) 10A
ELEC PARTS
5A
STRG SENS
(IGN) 10A
METER
10A
AIR BAG
5A
AIR SUS
(IGN RUN) 10A
ELEC PARTS
10A
ELEC PARTS (BAT-1)
5A
CDM
10A
DOOR LOCK FR
10A
AD2 ADAS
10A
DOOR LOCK RR
5A
BCM
5A
CAN GATEWAY
20A
POWER SOCKET
5A
E-PKB
10A
STOP LAMP
15A
4WD
10A
CABIN LIGHTING 1
10A
CABIN LIGHTING 2
40A
POWER SEAT 2ND
20A
AUDIO
10A
ELEC PARTS (BAT-2)
10A
AUDIO AMP 2
30A
AUDIO AMP 1
Cut Off SW
10A
METER (BAT)
5A
BCM (BAT)
15A
SUN ROOF
10A
VDC
5A
EPS
30A
SPARE
20A
SPARE
15A
SPARE
10A
SPARE
5A
SPARE
(AUTO ACC 1) 10A
ELEC PARTS
(AUTO ACC 2) 10A
ELEC PARTS
10A
I-BOOSTER
10A
USB CHAGRE 3RD
10A
SHIFT BY WIRE
5A
P/WDW MAIN SW
10A
ADB
10A
USB CHAGRE 1ST
10A
USB CHAGRE 2ND
20A
P/WDW RR RH
20A
P/WDW RR LH
20A
P/WDW FR AS
20A
P/WDW FR DR
30A
SCCM
30A
AUTO BACK DOOR
5A
INTELLIGENT KEY
30A
POWER SEAT FR LH
15A
RSE
15A
RR WIPER
30A
POWER SEAT FR RH
15A
TURN HAZARD
10A
WASH PUMP
20A
POWER SOCKET
20A
RR BLOWER MOTOR
20A
POWER SOCKET LUG
40A
FR BLOWER MOTOR
10A
HEATED STRG
15A
HEATED SEAT 3RD
20A
HEATED SEAT 2ND
20A
HEATED SEAT 1ST
UP SIDE
WAI0506X

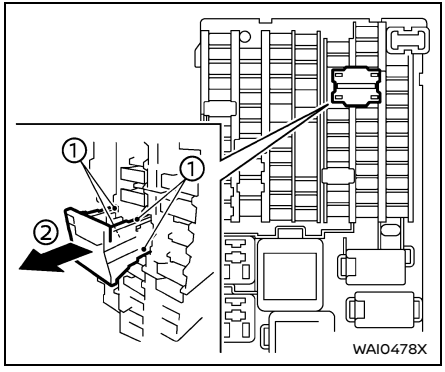

Extended storage fuse switch

To reduce battery drain, the extended storage fuse switch comes from the factory switched off. Prior to delivery of your vehicle, the switch is pushed in (switched on) and should always remain on.

If the extended storage fuse switch is not pushed in (switched on), the "Shipping Mode On, Push Storage Fuse" warning may appear on the vehicle information display. See "Shipping Mode On Push Storage Fuse warning" (P.126).

If any electrical equipment does not operate, remove the extended storage fuse switch and check for an open fuse.

NOTE:
If the extended storage fuse switch malfunctions or if the fuse is open, it is not necessary to replace the switch. In this case, remove the extended storage fuse switch and replace it with a new fuse of the same rating.

How to remove the extended storage fuse switch:

1. To remove the extended storage fuse switch, be sure the ignition switch is in the OFF position.
2. Be sure the headlights are off. (See "Headlight switch" (P.155) or "Intelligent Auto Headlights" (P.156).)
3. Pinch the locking tabs ① found on each side of the storage fuse switch.
4. Pull the storage fuse switch straight out from the fuse box ②.

INTELLIGENT KEY BATTERY REPLACEMENT

⚠ WARNING

- **Ingestion hazard: Death or serious injury can occur if ingested.**
- **A swallowed button cell or coin battery can cause internal chemical burns in as little as 2 hours.**
- **Keep new and used batteries out of reach of children.**
- **Be careful not to allow children to swallow removed parts.**
- **Seek immediate medical attention if a battery is suspected to be swallowed or inserted inside any part of the body.**
- **For treatment information call the National battery ingestion hotline @ 1-800-498-8666.**
- **There is a danger of explosion if the battery is incorrectly replaced. Replace only with the same or equivalent type of battery. Incorrectly replacing the battery can lead to injury or death.**
- **Do not crush or cut the battery.**
- **Do not subject the battery to extremely low air pressure at high altitude.**
- **Do not expose the battery to excessive heat such as sunshine, fire or similar heat sources.**

⚠ CAUTION

- **An improperly disposed battery can harm the environment. Always confirm local regulations for battery disposal.**
- **When changing batteries, do not let dust or oil get on the components.**

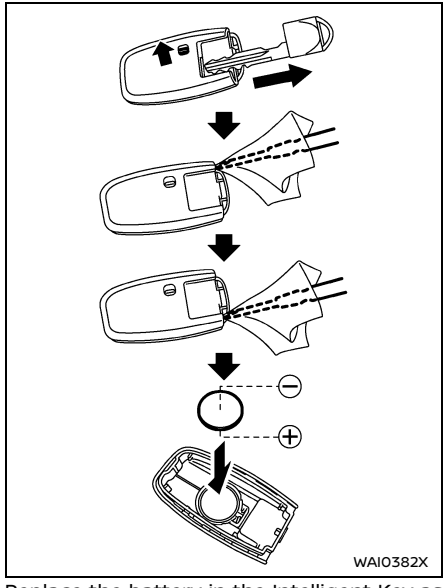

Replace the battery in the Intelligent Key as follows:

1. Remove the mechanical key from the Intelligent Key.
2. Insert a small screwdriver into the slit (on the right and left sides) and twist it to separate the upper part from the lower part. Use a cloth to protect the casing.
3. Replace the battery with a new one.
   Recommended battery:
   CR2032 or equivalent
   - Do not touch the internal circuit and electric terminals as doing so could cause a malfunction.
   - Hold the battery by the edges. Holding the battery across the contact points will seriously deplete the storage capacity.
   - Make sure that the ⊕ side faces the bottom of the case.

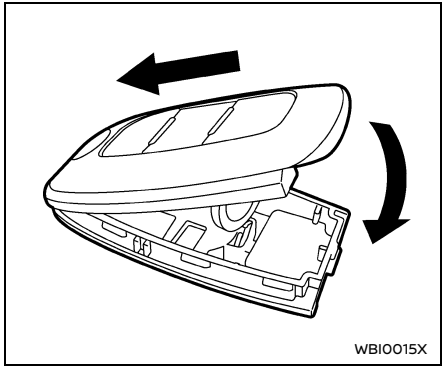

4. Align the tips of the upper and lower parts, and then push them together until it is securely closed.
5. Operate the buttons to check its operation.

If you need any assistance for replacement, it is recommended you visit a NISSAN dealer for this service.

NOTE:
FCC Notice:
For USA:
This device complies with Part 15 of the FCC Rules. Operation is subject to the following two conditions: (1) this device may not cause harmful interference, and (2) this device must accept any interference received, including interference that may cause undesired operation.

NOTE:
Changes or modifications not expressly approved by the party responsible for compliance could void the user's authority to operate the equipment.
For Canada:
This device contains licence-exempt transmitter(s)/receiver(s) that comply with Innovation, Science and Economic Development Canada's licence-exempt RSS(s). Operation is subject to the following two conditions: (1) This device may not cause interference. (2) This device must accept any interference, including interference that may cause undesired operation of the device.

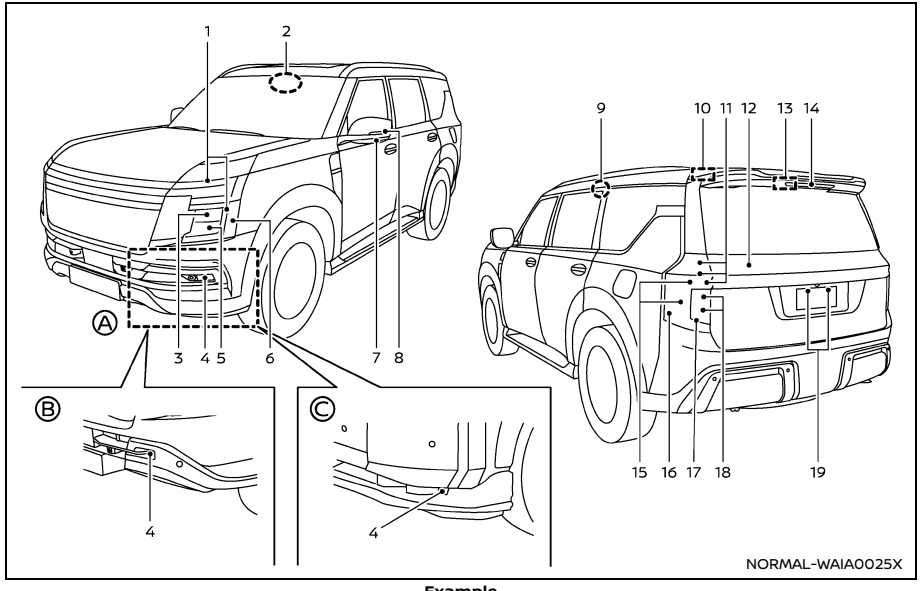

Example

BASIC INFORMATION

1. Front parking light/daytime running light/front turn signal light
2. Map light
3. Headlight (low-beam)
4. Front fog light (if so equipped)
5. Headlight (high-beam)
6. Front side marker light
7. Puddle light (if so equipped)
8. Side turn signal light (if so equipped)
9. Rear personal light
10. Rear room light
11. Stop light
12. Tail light (if so equipped)
13. Cargo light
14. High-mounted stop light
15. Tail light
16. Rear side marker light
17. Back-up light
18. Rear turn signal light
19. License plate light

Ⓐ Type A bumper
Ⓑ Type B bumper
Ⓒ NISMO models bumper

HEADLIGHTS AND REAR COMBINATION LIGHTS

Fog may temporarily form inside the lens of the exterior lights in the rain or in a car wash. A temperature difference between the inside and the outside of the lens causes the fog. This is not a malfunction. If large drops of water collect inside the lens, it is recommended you visit a NISSAN dealer for this service.

If replacement is required, it is recommended you visit a NISSAN dealer for this service.

EXTERIOR AND INTERIOR LIGHTS

Basic information

This vehicle is equipped with LED lights. Visit your NISSAN dealer for LED light replacement, replacement bulb type or any bulb changing procedure not listed in the section. Always check with the Parts Department at a NISSAN dealer for the latest information

about parts.

Replacement procedures

It is recommended that you visit a NISSAN dealer if replacement is required.

BASIC INFORMATION

If you have a flat tire, see "Flat tire" (P.443).

TIRE PRESSURE

Tire Pressure Monitoring System (TPMS)

This vehicle is equipped with the Tire Pressure Monitoring System (TPMS). It monitors tire pressure of all tires except the spare. When the low tire pressure warning light is lit and the "Tire Pressure Low Add Air" warning appears in the vehicle information display, one or more of your tires is significantly under-inflated.

The TPMS will activate only when the vehicle is driven at speeds above 16 MPH (25 km/h). Also, this system may not detect a sudden drop in tire pressure (for example, a flat tire while driving).

For more details, see "Low tire pressure warning light" (P.107), "Tire Pressure Monitoring System (TPMS)" (P.290) and "Tire Pressure Monitoring System (TPMS)" (P.443).

Tire inflation pressure

Check the pressure of the tires (including the spare) often and always prior to long distance trips. The recommended tire pressure specifications are shown on the Tire and Loading Information label under the "Cold Tire Pressure" heading. The Tire and Loading Information label is affixed to the driver side center pillar. Tire pressures should be checked regularly because:

- Most tires naturally lose air over time.
- Tires can lose air suddenly when driven over potholes or other objects or if the vehicle strikes a curb while parking.

The tire pressures should be checked when the tires are cold. The tires are considered COLD after the vehicle has been parked for 3 or more hours, or driven less than 1 mile (1.6 km) at moderate speeds.

TPMS with Easy Fill Tire Alert provides visual and audible signals outside the vehicle for inflating the tires to the recommended COLD tire pressure. (See "TPMS with Easy Fill Tire Alert" (P.292) about the TPMS with Easy Fill Tire Alert.)

Incorrect tire pressure, including under inflation, may adversely

affect tire life and vehicle handling.

WARNING

- Improperly inflated tires can fail suddenly and cause an accident.
- The Gross Vehicle Weight rating (GVWR) is located on the F.M.V.S.S./C.M.V.S.S. certification label. The vehicle weight capacity is indicated on the Tire and Loading Information label. Do not load your vehicle beyond this capacity. Overloading your vehicle may result in reduced tire life, unsafe operating conditions due to premature tire failure, or unfavorable handling characteristics and could also lead to a serious accident. Loading beyond the specified capacity may also result in failure of other vehicle components.
- Before taking a long trip, or whenever you heavily load your vehicle, use a tire pressure gauge to ensure that the tire pressures are at the specified level.
- For additional information regarding tires, refer to "Important Tire Safety Information" (US) or "Tire Safety Information" (Canada) in the Warranty Information Booklet.

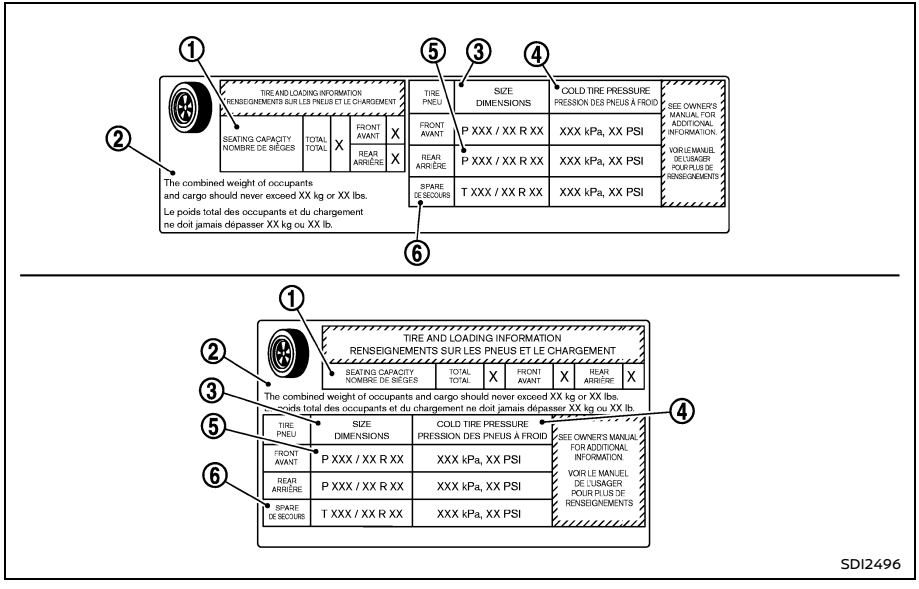

Tire and Loading Information label

① Seating capacity: The maximum number of occupants that can be seated in the vehicle.

② Vehicle load limit: See "Vehicle loading information" (P.533).

③ Original size: The size of the tires originally installed on the vehicle at the factory.

④ Cold tire pressure: Inflate the tires to this pressure when the tires are cold. Tires are considered COLD after the vehicle has been parked for 3 or more hours, or driven less than 1 mile (1.6 km) at moderate speeds. The recommended cold tire inflation is set by the manufacturer to provide the best balance of tire wear, vehicle handling, driveability, tire noise, etc., up to the vehicle's GVWR.

⑤ Tire size — see "Tire labeling" (P.494).

⑥ Spare tire size or compact spare tire size (if so equipped)

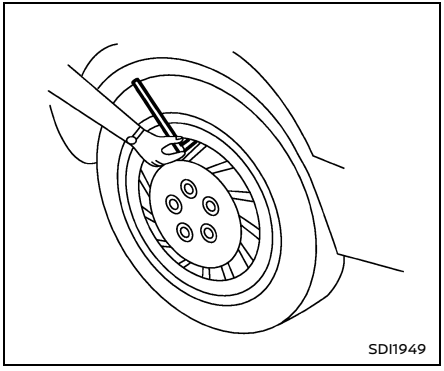

Checking the tire pressure

1. Remove the valve stem cap from the tire.
2. Press the pressure gauge squarely onto the valve stem. Do not press too hard or force the valve stem sideways, or air will escape. If the hissing sound of air escaping from the tire is heard while checking the pressure, reposition the gauge to eliminate this leakage.
3. Remove the gauge.
4. Read the tire pressure on the gauge stem and compare it to the specification shown on the Tire and Loading Information label.
5. Add air to the tire as needed. If too much air is added, press the core of the valve stem briefly with the tip of the gauge stem to release pressure. Recheck the pressure and add or release air as needed.
6. Install the valve stem cap.
7. Check the pressure of all other tires, including the spare.
8. Check the pressure when driving the vehicle at speeds of 100 MPH (160 km/h) or higher where it is legal to do so.

⚠ WARNING

- **Driving at high speeds, 100 MPH (160 km/h) or higher sustained where it is legal to do so, can cause tires to have excessive heat build up, which may result in a tire failure causing loss of control, crash, injuries or even death. Some high-speed rated tires require inflation pressure adjustment for high-speed operation. When speed limits and road conditions allow vehicle driving at high speeds, make sure tires are rated to support high speed operation, tires are in optimal conditions and pressure is adjusted to correct cold inflation pressure for high speed operation.**

- **Tires require adjustment to the inflation pressure when driving the vehicle at speeds of 100 MPH (160 km/h) or higher where it is legal to do so. See recommended tire inflation list for correct operating pressure.**
- **After vehicle high speed operation has ended, readjust the tire pressure to the recommended cold inflation pressure. (See "Checking the tire pressure" (P.493).)**

Size/Cold Tire Inflation Pressure: Front and Rear Original Tire

- **275/50R22 111H**
  - **35 psi**
  - **240 kPa**
- **275/60R20 115H**
  - **35 psi**
  - **240 kPa**
- **275/60R20 115H (ALL TERRAIN)**
  - **35 psi**
  - **240 kPa**
- **265/70R18 116H**
  - **35 psi**
  - **240 kPa**

Spare Tire

- **265/70R18 116H (with 22/20 inch conventional tire)**
  - **51 psi**
  - **350 kPa**
- **265/70R18 116H (with 18 inch conventional tire)**
  - **35 psi**
  - **240 kPa**

Recommended tire inflation pressures at speeds of 100 MPH (160 km/h) or higher where it is legal to do so.

Size/Cold Tire Inflation Pressure: Front and Rear Original Tire

- **275/50R22 111H**
  - **41 psi**
  - **280 kPa**
- **275/60R20 115H**
  - **36 psi**
  - **250 kPa**

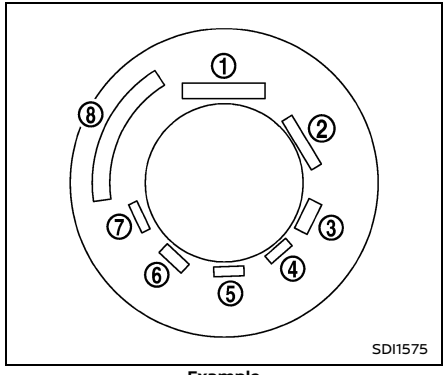

Example

TIRE LABELING

Basic information

Federal law requires tire manufacturers to place standardized information on the sidewall of all tires. This information identifies and describes the fundamental characteristics of the tire and also provides the tire identification number (TIN) for safety standard certification. The TIN can be used to identify the tire in case of a recall.

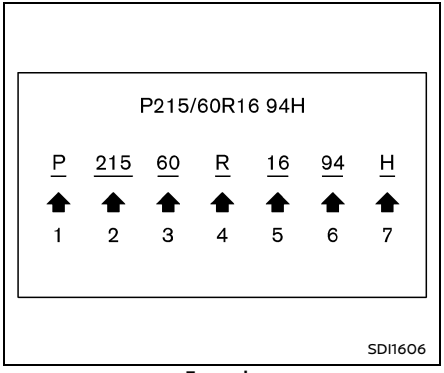

Example

① Tire size (example: P215/60R16 94H)

1. P: The “P” indicates the tire is designed for passenger vehicles. (Not all tires have this information.)
2. Three-digit number (215): This number gives the width in millimeters of the tire from sidewall edge to sidewall edge.
3. Two-digit number (60): This number, known as the aspect ratio, gives the tire’s ratio of height to width.
4. R: The “R” stands for radial.
5. Two-digit number (16): This number is the wheel or rim diameter in inches.
6. Two- or three-digit number (94): This number is the tire’s load index. It is a measurement of how much weight each tire can support. You may not find this information on all tires because it is not required by law.
7. H: Tire speed rating. You should not drive the vehicle faster than the tire speed rating.

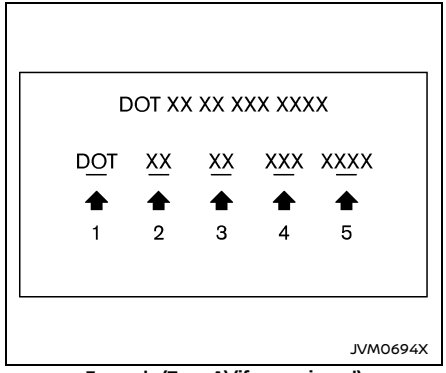

Example (Type A) (if so equipped)

② TIN (Tire Identification Number) for a new tire (example: DOT XX XX XXX XXXX)

1. DOT: Abbreviation for the “Department of Transportation”. The symbol can be placed above, below or to the left or right of the Tire Identification Number.
2. Two-digit code: Manufacturer’s identification mark
3. Two-digit code: Tire size
4. Three-digit code: Tire type code (Optional)

5. Four numbers represent the week and year the tire was built. For example, the numbers 3103 means the 31st week of 2003. If these numbers are missing, then look on the other sidewall of the tire.

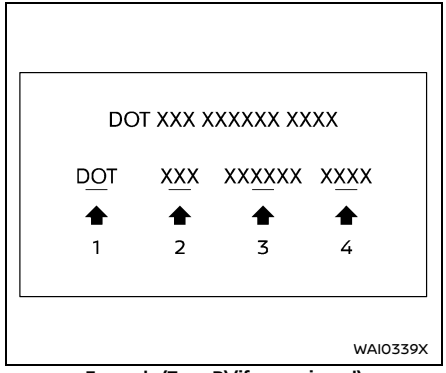

Example (Type B) (if so equipped)

② TIN (Tire Identification Number) for a new tire (example: DOT XXX XXXXXX XXXX)

1. DOT: Abbreviation for the "Department of Transportation". The symbol can be placed above, below or to the left or right of the Tire Identification Number.
2. Three-digit code: Manufacturer's identification mark
3. Six-digit code: Descriptive code used to identify significant characteristics of the tire.
4. Four numbers represent the week and year the tire was built. For example, the numbers 3103 means the 31st week of 2003.

③ Tire ply composition and material

The number of layers or plies of rubber-coated fabric in the tire.

Tire manufacturers also must indicate the materials in the tire, which include steel, nylon, polyester, and others.

④ Maximum permissible inflation pressure

This number is the greatest amount of air pressure that should be put in the tire. Do not exceed the maximum permissible inflation pressure.

⑤ Maximum load rating

This number indicates the maximum load in kilograms and pounds that can be carried by the tire. When replacing the tires on the vehicle, always use a tire that has the same load rating as the factory installed tire.

⑥ Term of “tubeless” or “tube type”
Indicates whether the tire requires an inner tube (“tube type”) or not (“tubeless”).
⑦ The word “radial”
The word “radial” is shown, if the tire has radial structure.
⑧ Manufacturer or brand name
Manufacturer or brand name is shown.

Other tire-related terminology

In addition to the many terms that are defined throughout this section, Intended Outboard Sidewall is (1) the sidewall that contains a whitewall, bears white lettering or bears manufacturer, brand and/or model name molding that is higher or deeper than the same molding on the other sidewall of the tire, or (2) the outward facing sidewall of an asymmetrical tire that has a particular side that must always face outward when mounted on a vehicle.

TYPES OF TIRES

Basic information

⚠ WARNING

- **When changing or replacing tires, be sure all four tires are of the same type (Example: Summer, All Season or Snow) and construction. A NISSAN dealer may be able to help you with information about tire type, size, speed rating and availability.**
- **Replacement tires may have a lower speed rating than the factory equipped tires, and may not match the potential maximum vehicle speed. Never exceed the maximum speed rating of the tire.**
- **Replacing tires with those not originally specified by NISSAN could affect the proper operation of the TPMS.**
- **For additional information regarding tires, refer to “Important Tire Safety Information” (US) or “Tire Safety Information” (Canada) in the Warranty Information Booklet.**

All season tires

NISSAN specifies all season tires on some models to provide good performance all year, including snowy and icy road conditions. All Season tires are identified by ALL SEASON and/or M&S (Mud and Snow) on the tire sidewall. Snow tires have better snow traction than All Season tires and may be more appropriate in some areas.

Summer tires

NISSAN specifies summer tires on some models to provide superior performance on dry roads. Summer tire performance is substantially reduced in snow and ice. Summer tires do not have the tire traction rating M&S on the tire sidewall.
If you plan to operate your vehicle in snowy or icy conditions, NISSAN recommends the use of SNOW tires or ALL SEASON tires on all four wheels.

Snow tires

If snow tires are needed, it is necessary to select tires equivalent in size and load rating to the original equipment tires. If you do not, it can adversely affect the safety and handling of your vehicle.
Generally, snow tires will have lower speed ratings than factory equipped tires and may not match the potential maximum vehicle speed. Never exceed the maximum speed rating of the tire.
If you install snow tires, they must be the same size, brand, construction and tread pattern on all four wheels.
For additional traction on icy roads, studded tires may be used. However, some U.S. states and Canadian provinces prohibit their use.

Check local, state and provincial laws before installing studded tires. Skid and traction capabilities of studded snow tires, on wet or dry surfaces, may be poorer than that of non-studded snow tires.

TIRE CHAINS

⚠ WARNING

If tire chains are used with this vehicle, they must allow sufficient clearance between the tire and the closest vehicle suspension or body component. Failure to use the correct chains, or not properly installing chains, can damage the brakes, suspension or other vehicle parts and cause a crash in which a person could be seriously injured or killed.

Use of tire chains may be prohibited according to location. Check the local laws before installing tire chains. When installing tire chains, make sure they are the proper size for the tires on your vehicle and are installed according to the chain manufacturer's suggestions. **Use only SAE Class S chains.** Class "S" chains are used on vehicles with restricted tire to vehicle clearance. Vehicles that can use Class "S" chains are designed to meet the SAE standard minimum clearances between the tire and the closest vehicle suspension or body component required to accommodate the use of a winter traction device (tire chains or cables). The minimum clearances are determined using the factory equipped tire size. Other types may damage your vehicle. Use chain tensioners when recommended by the tire chain manufacturer to ensure a tight fit. Loose end links of the tire chain must be secured or removed to prevent the possibility of whipping action damage to the fenders or underbody. If possible, avoid fully loading your vehicle when using tire chains. In addition, drive at a reduced speed. Otherwise, your vehicle may be damaged and/or vehicle handling and performance may be adversely affected.

Tire chains must be installed only on the rear wheels and not on the front wheels.

Never install tire chains on the temporary use only spare tire (except for conventional 18 inch tire equipped models).

Do not use tire chains on dry roads. Driving with tire chains in such conditions can cause damage to the various mechanisms of the vehicle due to some overstress.

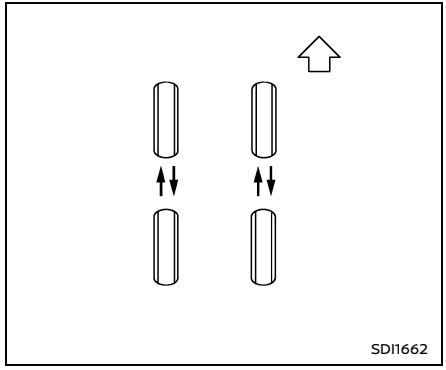

CHANGING WHEELS AND TIRES

Tire rotation

NISSAN recommends rotating the tires every 10,000 miles (16,000 km). (See "Flat tire" (P.443) for tire replacing procedures.)

As soon as possible, tighten the wheel nuts to the specified torque with a torque wrench.

Wheel nut tightening torque:
98 ft-lb (133 N·m)

The wheel nuts must be kept tightened to the specification at

all times. It is recommended that wheel nuts be tightened to the specification at each tire rotation interval.

WARNING

- **After rotating the tires, check and adjust the tire pressure.**
- **Retighten the wheel nuts when the vehicle has been driven for 600 miles (1,000 km) (also in cases of a flat tire, etc.).**
- **Do not include the temporary use only spare tire in the tire rotation.**
- **For additional information regarding tires, refer to "Important Tire Safety Information" (US) or "Tire Safety Information" (Canada) in the Warranty Information Booklet.**
- **After rotating the tires, do not use the Easy Fill Tire Alert to adjust the tire pressure. Instead use a gauge to adjust the tires to the correct pressure in accordance with Tire and Loading Information label.**
- **To ensure proper operation of the Easy Fill Tire Alert system after a tire rotation, reset and register the sensor to their new installed locations. It is recommended that you visit a NISSAN dealer for this service.**

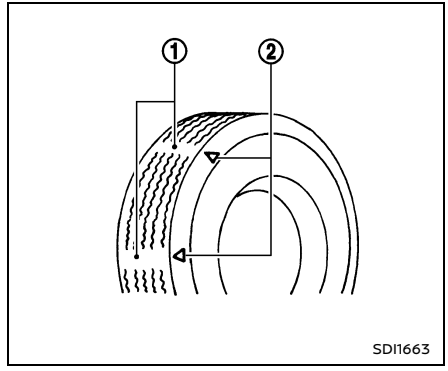

Tire wear and damage

1. Wear indicator
2. Wear indicator location mark

WARNING

- **Tires should be periodically inspected for wear, cracking, bulging or objects caught in the tread. If excessive wear, cracks, bulging or deep cuts are found, the tire(s) should be replaced.**

- **The original tires have built-in tread wear indicators. When wear indicators are visible, the tire(s) should be replaced.**
- **Tires degrade with age and use. Have tires, including the spare, over 6 years old checked by a qualified technician, because some tire damage may not be obvious. Replace the tires as necessary to prevent tire failure and possible personal injury.**
- **Improper service of the spare tire may result in serious personal injury. If it is necessary to repair the spare tire, it is recommended you visit a NISSAN dealer for this service.**
- **For additional information regarding tires, refer to "Important Tire Safety Information" (US) or "Tire Safety Information" (Canada) in the Warranty Information Booklet.**

Replacing wheels and tires

When replacing a tire, use the same size, tread design, speed rating and load carrying capacity as originally equipped. (See "Wheels and tires" (P.528) for recommended types and sizes of tires and wheels.)

⚠ WARNING

- **The use of tires other than those recommended or the mixed use of tires of different brands, construction (bias, bias-belted or radial), or tread patterns can adversely affect the ride, braking, handling, VDC system, ground clearance, body-to-tire clearance, tire chain clearance, speedometer calibration, headlight aim and bumper height. Some of these effects may lead to accidents and could result in serious personal injury.**
- **For Two-Wheel Drive (2WD) models, if your vehicle was originally equipped with 4 tires that were the same size and you are only replacing 2 of the 4 tires, install the new tires on the rear axle. Placing new tires on the front axle may cause loss of vehicle control in some driving conditions and cause an accident and personal injury.**
- **If the wheels are changed for any reason, always replace with wheels which have the same off-set dimension. Wheels of a different off-set could cause premature tire wear, degrade vehicle handling characteristics and/or interference with the brake discs/drums. Such interference can lead to decreased braking efficiency and/or early brake pad/shoe wear. See "Wheels and tires" (P.528) for wheel off-set dimensions.**
- **Since the spare tire is not equipped with the TPMS, when a spare tire is mounted or a wheel is replaced, the TPMS will not function and the low tire pressure warning light will flash for approximately 1 minute. The light will remain on after 1 minute. Have your tires replaced and/or TPMS system reset as soon as possible. It is recommended you visit a NISSAN dealer for these services.**

- **Replacing tires with those not originally specified by NISSAN could affect the proper operation of the TPMS.**
- **The TPMS sensor may be damaged if it is not handled correctly. Be careful when handling the TPMS sensor.**
- **When replacing the TPMS sensor, the ID registration may be required. It is recommended you visit a NISSAN dealer for ID registration.**
- **Do not use a valve stem cap that is not specified by NISSAN. The valve stem cap may become stuck.**
- **Be sure that the valve stem caps are correctly fitted. Otherwise the valve may be clogged up with dirt and cause a malfunction or loss of pressure.**
- **Do not install a damaged or deformed wheel or tire even if it has been repaired. Such wheels or tires could have structural damage and could fail without warning.**
- **The use of retread tire is not recommended.**
- **For additional information regarding tires, refer to "Important Tire Safety Information" (US) or "Tire Safety Information" (Canada) in the Warranty Information Booklet.**

Four-Wheel Drive (4WD) models

⚠ CAUTION

- **Always use tires of the same type, size, brand, construction (bias, biasbelted or radial), and tread pattern on all four wheels. Failure to do so may result in a circumference difference between tires on the front and rear axles which will cause excessive tire wear and may damage the transmission, transfer case and differential gears.**
- **ONLY use spare tires specified for the 4WD model.**

If excessive tire wear is found, it is recommended that all four tires be replaced with tires of the same size, brand, construction and tread pattern. The tire pressure and wheel alignment should also be checked and corrected as necessary. It is recommended you visit a NISSAN dealer for this service.

Wheel balance

Unbalanced wheels may affect vehicle handling and tire life. Even with regular use, wheels can get out of balance. Therefore, they should be balanced as required.

Wheel balance service should be performed with the wheels off the vehicle. Spin balancing the wheels on the vehicle could lead to mechanical damage.

For additional information regarding tires, refer to "Important Tire Safety Information" (US) or "Tire Safety Information" (Canada) in the NISSAN Warranty Information Booklet.

Care of wheels

See "Wheels" (P.461) for details about care of the wheels.

Spare tire

Since the spare tire is not equipped with the TPMS, when a spare tire is mounted (TEMPORARY USE ONLY (if so equipped)), the TPMS will not function.

Spare tire (FULL-SIZE TEMPORARY USE ONLY spare tire) (if so equipped):

Observe the following precautions if the full-size temporary use only spare tire must be used, otherwise your vehicle could be damaged or involved in an accident.

⚠ WARNING

- **The full-size temporary use only spare tire should be used for emergency use. It should be replaced with the standard tire at the first opportunity to avoid possible tire or differential damage**

- **Drive carefully while the spare tire is installed. Avoid sharp turns and abrupt braking while driving. The vehicle driving performance may be affected when driving on wet or snow covered roads.**
- **When the spare tire is installed, the following systems may not work correctly.**
  - **– Tire Pressure Monitoring System (TPMS)**
  - **– Vehicle Dynamic Control (VDC) System**
- **Periodically check spare tire inflation pressure. Always keep the spare tire inflated to the pressure specification shown on the Tire and Loading Information label. For Tire and Loading Information label location, see "Tire and Loading Information label" in the index of this manual.**
- **With the spare tire installed do not drive your vehicle at speeds faster than 70 MPH (112 km/h).**
- **When driving on roads covered with snow or ice, the spare tire should be used on the front wheels and original tire used on the rear wheels (drive wheels). Use tire chains only on the two rear original tires.**
- **Do not use the spare tire on other vehicles.**
- **Do not use more than one spare tire at the same time.**

⚠ CAUTION

- **Do not use tire chains on the spare tire. Tire chains will not fit properly and may cause damage to the vehicle.**
- **Depending on the driving conditions (tire condition, load and speed), the "Tire Size Incorrect: See Owner's Manual" warning message may appear in the vehicle information display when a spare tire is installed. While the warning message is displayed, the 2WD mode may be engaged even if the 4H or 4L (if so equipped) mode is selected. Be especially careful when driving. (See "Tire Size Incorrect: See Owner's Manual warning (if so equipped)" (P.125).)**

9 Maintenance and schedules

Maintenance requirement 504
- Basic information 504
- General maintenance 504
- Scheduled maintenance 504
- Where to go for service 504

General maintenance 504
- Basic information 504
- Explanation of maintenance items 504

Explanation of scheduled maintenance items 507
- Basic information 507
- Emission control system maintenance 507
- Chassis and body maintenance 507

Maintenance schedules 508
- Basic information 508
- Additional maintenance items for severe operating conditions 508

VR35DDTT engine model 509
- Basic information 509
- Maintenance schedules 509

MAINTENANCE REQUIREMENT

BASIC INFORMATION

Some day-to-day and regular maintenance is essential to maintain your vehicle's good mechanical condition, as well as its emission and engine performance.

It is the owner's responsibility to make sure that the scheduled maintenance, as well as general maintenance, is performed.

As the vehicle owner, you are the only one who can ensure that your vehicle receives the proper maintenance. You are a vital link in the maintenance chain.

GENERAL MAINTENANCE

General maintenance includes those items which should be checked during normal day-to-day operation. They are essential for proper vehicle operation. It is your responsibility to perform these procedures regularly as prescribed.

Performing general maintenance checks requires minimal mechanical skill and only a few general automotive tools.

These checks or inspections can be done by yourself, a qualified technician or, if you prefer, a NISSAN dealer.

SCHEDULED MAINTENANCE

The maintenance items listed in this section are required to be serviced at regular intervals. However, under severe driving conditions, additional or more frequent maintenance will be required.

WHERE TO GO FOR SERVICE

If maintenance service is required or your vehicle appears to malfunction, have the systems checked and serviced. It is recommended you visit a NISSAN dealer for this service.

NISSAN technicians are well-trained specialists and are kept up to date with the latest service information through technical bulletins, service tips, and training programs. They are completely qualified to work on NISSAN vehicles **before** work begins.

If your vehicle is involved in a collision, it is recommended that you ask your NISSAN dealer where the nearest NISSAN Certified Collision Center is located, or go to http://collision.nissanusa.com.

You can be confident that a NISSAN dealer's service department can perform the service needed to meet the maintenance requirements on your vehicle.

GENERAL MAINTENANCE

BASIC INFORMATION

During the normal day-to-day operation of the vehicle, general maintenance should be performed regularly as prescribed in this section. If you detect any unusual sounds, vibrations or smells, be sure to check for the cause and have it checked promptly. It is recommended to have a NISSAN dealer do it promptly. In addition, it is recommended you visit a NISSAN dealer if you think that repairs are required.

When performing any checks or maintenance work, closely observe "Maintenance precautions" (P.468).

EXPLANATION OF MAINTENANCE ITEMS

Basic information

Additional information on the following items with "*" is found in the "8. Do-it yourself" section.

Outside the vehicle

The maintenance items listed here should be performed from time to time, unless otherwise specified.

Doors and engine hood: Check that all doors and the engine hood, operate properly. Also ensure that all latches lock securely. Lubricate hinges, latches, latch pins, rollers and links if necessary. Make sure that the secondary latch keeps the hood from opening when the primary latch is

released.

When driving in areas using road salt or other corrosive materials, check lubrication frequently.

Lights*: Clean the headlights on a regular basis. Make sure that the headlights, stop lights, tail lights, turn signal lights, and other lights are all operating properly and installed securely. Also check headlight aim.

Road wheel nuts (lug nuts)*: When checking the tires, make sure no wheel nuts are missing, and check for any loose wheel nuts. Tighten if necessary.

Tire rotation*: Rotate tires at the specified interval shown in the maintenance schedule.

Tires*: Check the pressure with a gauge often and always prior to long distance trips. If necessary, adjust the pressure in all tires, including the spare, to the pressure specified. Check carefully for damage, cuts or excessive wear.

Tire Pressure Monitoring System (TPMS) tire pressure sensor*: It is recommended that you replace the TPMS tire pressure sensor assembly when the tires are replaced due to wear or age.

Wheel alignment and balance: If the vehicle should pull to either side while driving on a straight and level road, or if you detect uneven or abnormal tire wear, there may be a need for wheel alignment.

If the steering wheel or seat vibrates at normal highway speeds, wheel balancing may be needed.

For additional information regarding tires, refer to "Important Tire Safety Information" (US) or "Tire Safety Information" (Canada) in the NISSAN Warranty Information Booklet.

Windshield: Clean the windshield on a regular basis. Check the windshield at least every six months for cracks or other damage. Have a damaged windshield repaired by a qualified repair facility.

It is recommended that you have a damaged windshield repaired by a NISSAN dealer, or a NISSAN Certified Collision Center. To locate a collision center in your area, refer to http://collision.nissanusa.com.

Windshield wiper blades*: Check for cracks or wear if they do not wipe properly.

Inside the vehicle

The maintenance items listed here should be checked on a regular basis, such as when performing periodic maintenance, cleaning the vehicle, etc.

Accelerator pedal: Check the pedal for smooth operation and make sure the pedal does not catch or require uneven effort. Keep the floor mat away from the pedal.

Automatic transmission P (Park) mechanism: On a fairly steep hill, check that your vehicle is held securely with the shift button in the P (Park) position without applying any brakes.

Brake pedal: Check the pedal for smooth operation. If the brake pedal suddenly goes down further than normal, the pedal feels spongy or the vehicle seems to take longer to stop, have your vehicle checked immediately. It is recommended you visit a NISSAN dealer for this service. Keep the floor mat away from the pedal.

Brakes*: Check that the brakes do not pull the vehicle to one side when applied.

Parking brake: Check the parking brake operation regularly. The vehicle should be securely held on a fairly steep hill with only the parking brake applied. If the parking brake needs adjusted, it is recommended you visit a NISSAN dealer for this service.

Seat belts: Check that all parts of the seat belt system (for example, buckles, anchors, adjuster and retractors) operate properly and smoothly, and are installed securely. Check the belt webbing for cuts, fraying, wear or damage.

Seats: Check seat position controls such as seat adjusters, seatback recliner, etc. to ensure they operate smoothly and that all latches lock securely in every position. Check that the head restraints/headrests move up and down smoothly and that the locks (if so equipped) hold securely in all latched positions.

Steering wheel: Check for changes in the steering conditions, such as excessive free play, hard steering or strange noises.

Warning lights and chimes: Make sure that all warning lights and chimes are operating properly.

Windshield defroster: Check that the air comes out of the defroster outlets properly and in sufficient quantity when operating

the heater or air conditioner.

Windshield wiper and washer*: Check that the wipers and washer operate properly and that the wipers do not streak.

Under the hood and vehicle

The maintenance items listed here should be checked periodically (for example, each time you check the engine oil or refuel).

Battery*: This vehicle is equipped with a sealed maintenance free battery. It is recommended that you visit a NISSAN dealer for service.

NOTE:

Care should be taken to avoid situations that can lead to potential battery discharge and potential no-start conditions such as:

1. **Installation or extended use of electronic accessories that consume battery power when the engine is not running (Phone chargers, GPS, DVD players, etc.)**
2. **Vehicle is not driven regularly and/or only driven short distances.**

In these cases, the battery may need to be charged to maintain battery health.

Brake fluid level*: Make sure that the brake fluid level is between the MAX and MIN lines on the reservoir.

Engine coolant level*: Check the coolant level when the engine is cold.

Engine drive belts*: Make sure that no belt is frayed, worn, cracked or oily.

Engine oil level*: Check the level after parking the vehicle on a level spot and turning off the engine. Wait more than 15 minutes for the oil to drain back into the oil pan.

Exhaust system: Make sure there are no loose supports, cracks or holes. If the sound of the exhaust seems unusual or there is a smell of exhaust fumes, immediately have the exhaust system inspected. It is recommended you visit a NISSAN dealer for this service. (See "Precautions when starting and driving" (P.289) for exhaust gas (carbon monoxide).)

Fluid leaks: Check under the vehicle for fuel, oil, water or other fluid leaks after the vehicle has been parked for a while. Water dripping from the air conditioner after use is normal. If you should notice any leaks or if gasoline fumes are evident, check for the cause and have it corrected immediately.

Radiator and hoses: Check the front of the radiator and clean off any dirt, insects, leaves, etc., that may have accumulated. Make sure the hoses have no cracks, deformation, rot or loose connections.

Underbody: The underbody is frequently exposed to corrosive substances such as those used on icy roads or to control dust. It is very important to remove these substances, otherwise rust will form on the floor pan, frame, fuel lines and around the exhaust system. At the end of winter, the underbody should be thoroughly flushed with plain water, being careful to clean those areas where mud and dirt may accumulate. For additional information, see "Cleaning exterior" (P.460).

Windshield washer fluid*: Check that there is adequate fluid in the reservoir.

EXPLANATION OF SCHEDULED MAINTENANCE ITEMS

BASIC INFORMATION

The following descriptions are provided to give you a better understanding of the scheduled maintenance items that should be regularly checked or replaced. The maintenance schedule indicates at which mileage/time intervals each item requires service.

In addition to scheduled maintenance, your vehicle requires that some items be checked during normal day-to-day operation. Refer to "General maintenance" (P.504).

Items marked with "*" are recommended by NISSAN for reliable vehicle operation. You are not required to perform maintenance on these items in order to maintain the warranties which come with your vehicle. Other maintenance items and intervals are required.

When applicable, additional information can be found in the "8. Do-it yourself" section.

NOTE:

NISSAN does not advocate the use of non-OEM approved aftermarket flushing systems and strongly advises against performing these services on a NISSAN product. Many of the aftermarket flushing systems use non-OEM approved chemicals or solvents, the use of which has not been validated by NISSAN.

For recommended fuel, lubricants, fluids, grease, and refrigerant, refer to "Capacities and recommended fluids/lubricants" (P.523).

EMISSION CONTROL SYSTEM MAINTENANCE

Engine drive belts*:

Check engine drive belt for wear, fraying or cracking and for proper tension. Replace any damaged drive belt.

Engine air filter:

Replace at specified intervals. When driving for prolonged periods in dusty conditions, check/replace the filter more frequently.

Engine coolant*

Replace coolant at the specified interval. When adding or replacing coolant, be sure to use only Genuine NISSAN Long Life Antifreeze/Coolant (blue) or equivalent with the proper mixture. (Refer to "Engine cooling system" (P.469) to determine the proper mixture for your area.)

NOTE:

Mixing any other type of coolant or the use of non-distilled water may reduce the recommended service interval of the coolant.

Engine oil and oil filter:

Replace engine oil and oil filter at the specified intervals. For recommended oil grade and viscosity refer to "Capacities and recommended fluids/lubricants" (P.523).

Engine valve clearance*:

Inspect only if valve noise increases. Adjust valve clearance if necessary.

Fuel tank vapor vent system*:

Check vapor lines for leaks or looseness. Tighten connections or replace parts as necessary.

Fuel lines/connections*:

Check the fuel hoses, piping and connections for leaks, looseness, or deterioration. Tighten connections or replace parts as necessary.

Spark plugs:

Replace at specified intervals. Install new plugs of the type as originally equipped.

CHASSIS AND BODY MAINTENANCE

Brake lines:

Visually inspect for proper installation. Check for chafing, cracks, deterioration, and signs of leaking. Replace any deteriorated or damaged parts immediately.

Brake pads and rotors:

Check for wear, deterioration and fluid leaks. Replace any deteriorated or damaged parts immediately.

Exhaust system:

Visually inspect the exhaust pipes, muffler and hangers for leaks, cracks, deterioration, and damage. Tighten connections or replace parts as necessary.

In-cabin microfilter:

Replace at specified intervals. When driving for prolonged periods in dusty conditions, replace the filter more frequently.

Propeller shaft(s):

Check for damage, looseness, and grease leakage.

Steering gear and linkage, axle and suspension parts, drive shaft boots:

Check for damage, looseness, and leakage of oil or grease. Under severe driving condi-

tions, inspect more frequently.

Tire rotation:

Rotate tires at the specified interval. When rotating tires, check for damage and uneven wear. Replace if necessary.

Transfer case oil (4WD models) and Differential gear oil:

Visually inspect for signs of leakage at specified intervals.

BASIC INFORMATION

To help ensure smooth, safe and economical driving, NISSAN provides two maintenance schedules that may be used, depending upon the conditions in which you usually drive. These schedules contain both distance and time intervals, up to 120,000 miles (192,000 km)/144 months. For most people, the odometer reading will indicate when service is needed. However, if you drive very little, your vehicle should be serviced at the regular time intervals shown in the schedule.

After 120,000 miles (192,000 km)/144 months, continue maintenance at the same mileage/time intervals.

ADDITIONAL MAINTENANCE ITEMS FOR SEVERE OPERATING CONDITIONS

Additional maintenance items for severe operating conditions; should be performed on vehicles that are driven under especially demanding conditions. Additional maintenance items should be performed if you primarily operate your vehicle under the following conditions:

- Repeated short trips of less than 5 miles (8 km).
- Repeated short trips of less than 10 miles (16 km) with outside temperatures remaining below freezing.
- Operating in hot weather in stop-and-go "rush hour" traffic.
- Extensive idling and/or low speed driving for long distances, such as police, taxi or door-to-door delivery use.
- Driving in dusty conditions.
- Driving on rough, muddy or salt spread roads.
- Towing a trailer, using a camper or car-top carrier.

If your vehicle is mainly operated under the severe conditions, follow the severe use maintenance intervals shown in the maintenance schedule.

VR35DDTT ENGINE MODEL

BASIC INFORMATION

The following shows the maintenance schedule.
Choose the maintenance schedule needed based on your vehicle driving conditions.
After 120,000 miles (192,000 km)/144 months, continue maintenance at the same mileage/time interval.

MAINTENANCE SCHEDULES

5,000 miles/(8,000 km)/6 months

Perform at number of miles, kilometers or months, whichever comes first.
Standard maintenance:
Not applicable. Proceed to the next interval.
Severe use maintenance:
Inspections:
- Brake pads & rotors
- Steering gear & linkage
- Axle & suspension parts
- Propeller shaft
- Drive shaft boots
- Exhaust system

Essential:
- Tire rotation

10,000 miles/(16,000 km)/12 months

Perform at number of miles, kilometers or months, whichever comes first.
Standard maintenance:
Inspections:
- Automatic transmission fluid (1)
- Brake lines
- Brake pads & rotors
- Transfer case oil (4WD models)
- Front differential gear oil
- Rear differential gear oil (with-differential-lock model)
- Rear differential gear oil (without-differential-lock model)
- Drive shaft boots
- Propeller shaft
- Intelligent Key battery* (2)

Essential:
- Replace engine oil and oil filter (3)
- Tire rotation
- Replace In-cabin microfilter
- Lubricate propeller shaft

Severe use maintenance
Inspections:
- Brake pads & rotors
- Steering gear & linkage
- Axle & suspension parts
- Propeller shaft
- Drive shaft boots
- Exhaust system
- Front differential gear oil
- Rear differential gear oil (without-differential-lock model)

Essential:
- Replace brake fluid
- Replace rear differential gear oil (with-differential-lock model)

(1) Request the dealer to inspect the fluid deterioration data using a CONSULT. If the deterioration data is more than 77000, replace the AT fluid.
(2) Performed based on the number of service months only.
(3) If the oil replacement indicator is displayed, please change the engine oil and filter within two weeks or less than 500 miles (800 km).
After replacing the engine oil, reset the display.
* Maintenance items and intervals with "*" are recommended by NISSAN for reliable vehicle operation. The owner need not perform such maintenance in order to maintain the emission warranty or manufacturer recall liability. Other maintenance items and intervals are required.

15,000 miles/(24,000 km)/18 months

Perform at number of miles, kilometers or months, whichever comes first.
Standard maintenance:
Not applicable. Proceed to the next interval.
Severe use maintenance:
Inspections:
- Brake pads & rotors
- Steering gear & linkage
- Axle & suspension parts
- Propeller shaft
- Drive shaft boots
- Exhaust system

Essential:
- Tire rotation

20,000 miles/(32,000 km)/24 months

Perform at number of miles, kilometers or months, whichever comes first.
Standard maintenance:
Inspections:
- Automatic transmission fluid (1)
- Brake lines
- Brake pads & rotors
- Fuel tank vapor vent system*
- Fuel lines/connections*
- Exhaust system
- Transfer case oil (4WD models)
- Front differential gear oil
- Rear differential gear oil (without-differential-lock model)
- Steering gear and linkage
- Axle & suspension parts
- Drive shaft boots
- Propeller shaft

Essential:
- Replace brake fluid
- Replace engine oil and oil filter (2)
- Replace rear differential gear oil (with-differential-lock model)
- Tire rotation
- Lubricate propeller shaft
- Replace In-cabin microfilter
- Replace Intelligent Key battery* (3)

Severe use maintenance:
Inspections:
- Brake pads & rotors
- Steering gear & linkage
- Axle & suspension parts
- Propeller shaft
- Drive shaft boots
- Exhaust system

Essential:
- Replace automatic transmission fluid
- Replace brake fluid
- Replace transfer case oil (4WD models)
- Replace front differential gear oil
- Replace rear differential gear oil (with-differential-lock model)
- Replace rear differential gear oil (without-differential-lock model)

(1) Request the dealer to inspect the fluid deterioration data using a CONSULT. If the deterioration data is more than 77000, replace the AT fluid.
(2) If the oil replacement indicator is displayed, please change the engine oil and filter within two weeks or less than 500 miles (800 km). After replacing the engine oil, reset the display.
(3) Performed based on the number of service months only.
* Maintenance items and intervals with "*" are recommended by NISSAN for reliable vehicle operation. The owner need not perform such maintenance in order to maintain the emission warranty or manufacturer recall liability. Other maintenance items and intervals are required.

25,000 miles/(40,000 km)/30 months

Perform at number of miles, kilometers or months, whichever comes first.
Standard maintenance:
Not applicable. Proceed to the next interval.
Severe use maintenance:
Inspections:
- Brake pads & rotors
- Steering gear & linkage
- Axle & suspension parts
- Propeller shaft
- Drive shaft boots
- Exhaust system

Essential:
- Tire rotation

30,000 miles/(48,000 km)/36 months

Perform at number of miles, kilometers or months, whichever comes first.
Standard maintenance:
Inspections:
- Automatic transmission fluid (1)
- Brake lines
- Brake pads & rotors
- Transfer case oil (4WD models)
- Front differential gear oil
- Rear differential gear oil (with-differential-lock model)
- Rear differential gear oil (without-differential-lock model)
- Drive shaft boots
- Propeller shaft

Essential:
- Replace engine air filter (2)
- Replace engine oil and oil filter (3)
- Replace Intelligent Key battery* (4)
- Replace in-cabin microfilter
- Tire rotation
- Lubricate propeller shaft

Severe use maintenance:
Inspections:
- Brake pads & rotors
- Steering gear & linkage
- Axle & suspension parts
- Propeller shaft
- Drive shaft boots
- Exhaust system
- Front differential gear oil
- Rear differential gear oil (without-differential-lock model)

Essential:
- Replace brake fluid
- Replace rear differential gear oil (with-differential-lock model)

(1) Request the dealer to inspect the fluid deterioration data using a CONSULT. If the deterioration data is more than 77000, replace the AT fluid.
(2) If operating mainly in dusty conditions, more frequent maintenance may be required.
(3) If the oil replacement indicator is displayed, please change the engine oil and filter within two weeks or less than 500 miles (800 km). After replacing the engine oil, reset the display.
(4) Performed based on the number of service months only.
* Maintenance items and intervals with "*" are recommended by NISSAN for reliable vehicle operation. The owner need not perform such maintenance in order to maintain the emission warranty or manufacturer recall liability. Other maintenance items and intervals are required.

35,000 miles/(56,000 km)/42 months

Perform at number of miles, kilometers or months, whichever comes first.
Standard maintenance:
Not applicable. Proceed to the next interval.
Severe use maintenance:
Inspections:
- Brake pads & rotors
- Steering gear & linkage
- Axle & suspension parts
- Propeller shaft
- Drive shaft boots
- Exhaust system

Essential:
- Tire rotation

40,000 miles/(64,000 km)/48 months

Perform at number of miles, kilometers or months, whichever comes first.
Standard maintenance:
Inspections:
- Automatic transmission fluid (1)
- Brake lines
- Brake pads & rotors
- Fuel tank vapor vent system*
- Fuel lines/connections*
- Exhaust system
- Transfer case oil (4WD models)
- Front differential gear oil
- Rear differential gear oil (without-differential-lock model)
- Steering gear and linkage
- Axle & suspension parts
- Drive shaft boots
- Propeller shaft

Essential:
- Replace brake fluid
- Replace engine oil and oil filter (2)
- Replace rear differential gear oil (with-differential-lock model)
- Tire rotation
- Lubricate propeller shaft
- Replace In-cabin microfilter
- Replace Intelligent Key battery* (3)

Severe use maintenance:
Inspections:
- Brake pads & rotors
- Steering gear & linkage
- Axle & suspension parts
- Propeller shaft
- Drive shaft boots
- Exhaust system

Essential:
- Replace automatic transmission fluid
- Replace brake fluid
- Replace transfer case oil (4WD models)
- Replace front differential gear oil
- Replace rear differential gear oil (with-differential-lock model)
- Replace rear differential gear oil (without-differential-lock model)

(1) Request the dealer to inspect the fluid deterioration data using a CONSULT. If the deterioration data is more than 77000, replace the AT fluid.
(2) If the oil replacement indicator is displayed, please change the engine oil and filter within two weeks or less than 500 miles (800 km). After replacing the engine oil, reset the display.
(3) Performed based on the number of service months only.
* Maintenance items and intervals with "*" are recommended by NISSAN for reliable vehicle operation. The owner need not perform such maintenance in order to maintain the emission warranty or manufacturer recall liability. Other maintenance items and intervals are required.

45,000 miles/(72,000 km)/54 months

Perform at number of miles, kilometers or months, whichever comes first.
Standard maintenance:
Not applicable. Proceed to the next interval.
Severe use maintenance:
Inspections:
- Brake pads & rotors
- Steering gear & linkage
- Axle & suspension parts
- Propeller shaft
- Drive shaft boots
- Exhaust system

Essential:
- Tire rotation

50,000 miles/(80,000 km)/60 months

Perform at number of miles, kilometers or months, whichever comes first.
Standard maintenance:
Inspections:
- Automatic transmission fluid (1)
- Brake lines
- Brake pads & rotors
- Transfer case oil (4WD models)
- Front differential gear oil
- Rear differential gear oil (with-differential-lock model)
- Rear differential gear oil (without-differential-lock model)
- Drive shaft boots
- Propeller shaft

Essential:
- Replace engine oil and oil filter (2)
- Tire rotation
- Lubricate propeller shaft
- Replace In-cabin microfilter
- Replace Intelligent Key battery* (3)

Severe use maintenance:
Inspections:
- Brake pads & rotors
- Steering gear & linkage
- Axle & suspension parts
- Propeller shaft
- Drive shaft boots
- Exhaust system
- Front differential gear oil
- Rear differential gear oil (without-differential-lock model)

Essential:
- Replace brake fluid
- Replace rear differential gear oil (with-differential-lock model)

(1) Request the dealer to inspect the fluid deterioration data using a CONSULT. If the deterioration data is more than 77000, replace the AT fluid.
(2) If the oil replacement indicator is displayed, please change the engine oil and filter within two weeks or less than 500 miles (800 km). After replacing the engine oil, reset the display.
(3) Performed based on the number of service months only.
* Maintenance items and intervals with "*" are recommended by NISSAN for reliable vehicle operation. The owner need not perform such maintenance in order to maintain the emission warranty or manufacturer recall liability. Other maintenance items and intervals are required.

55,000 miles/(88,000 km)/66 months

Perform at number of miles, kilometers or months, whichever comes first.
Standard maintenance:
Not applicable. Proceed to the next interval.
Severe use maintenance:
Inspections:
- Brake pads & rotors
- Steering gear & linkage
- Axle & suspension parts
- Propeller shaft
- Drive shaft boots
- Exhaust system

Essential:
- Tire rotation

60,000 miles/(96,000 km)/72 months

Perform at number of miles, kilometers or months, whichever comes first.
Standard maintenance:
Inspections:
- Automatic transmission fluid (1)
- Brake lines
- Brake pads & rotors
- Engine drive belt*
- Fuel tank vapor vent system*
- Fuel lines/connections*
- Exhaust system
- Transfer case oil (4WD models)
- Front differential gear oil
- Rear differential gear oil (without-differential-lock model)
- Steering gear and linkage
- Axle & suspension parts
- Drive shaft boots
- Propeller shaft

Essential:
- Replace engine air filter (2)
- Replace brake fluid
- Replace engine oil and oil filter (3)
- Replace rear differential gear oil (with-differential-lock model)
- Replace Intelligent Key battery* (4)
- Replace in-cabin microfilter
- Tire rotation
- Replace spark plugs
- Lubricate propeller shaft

Severe use maintenance:
Inspections:
- Brake pads & rotors
- Steering gear & linkage
- Axle & suspension parts
- Propeller shaft
- Drive shaft boots
- Exhaust system

Essential:
- Replace automatic transmission fluid
- Replace brake fluid
- Replace transfer case oil (4WD models)
- Replace front differential gear oil
- Replace rear differential gear oil (with-differential-lock model)
- Replace rear differential gear oil (without-differential-lock model)

(1) Request the dealer to inspect the fluid deterioration data using a CONSULT. If the deterioration data is more than 77000, replace the AT fluid.
(2) If operating mainly in dusty conditions, more frequent maintenance may be required.
(3) If the oil replacement indicator is displayed, please change the engine oil and filter within two weeks or less than 500 miles (800 km). After replacing the engine oil, reset the display.
(4) Performed based on the number of service months only.
* Maintenance items and intervals with "*" are recommended by NISSAN for reliable vehicle operation. The owner need not perform such maintenance in order to maintain the emission warranty or manufacturer recall liability. Other maintenance items and intervals are required.

65,000 miles/(104,000 km)/78 months

Perform at number of miles, kilometers or months, whichever comes first.
Standard maintenance:
Not applicable. Proceed to the next interval.
Severe use maintenance:
Inspections:
- Brake pads & rotors
- Steering gear & linkage
- Axle & suspension parts
- Propeller shaft
- Drive shaft boots
- Exhaust system

Essential:
- Tire rotation

70,000 miles/(112,000 km)/84 months

Perform at number of miles, kilometers or months, whichever comes first.
Standard maintenance:
Inspections:
- Automatic transmission fluid (1)
- Brake lines
- Brake pads & rotors
- Engine drive belt*
- Transfer case oil (4WD models)
- Front differential gear oil
- Rear differential gear oil (with-differential-lock model)
- Rear differential gear oil (without-differential-lock model)
- Drive shaft boots
- Propeller shaft

Essential:
- Replace engine oil and oil filter (2)
- Tire rotation
- Lubricate propeller shaft
- Replace In-cabin microfilter
- Replace Intelligent Key battery* (3)

Severe use maintenance:
Inspections:
- Brake pads & rotors
- Steering gear & linkage
- Axle & suspension parts
- Propeller shaft
- Drive shaft boots
- Exhaust system
- Front differential gear oil
- Rear differential gear oil (without-differential-lock model)

Essential:
- Replace brake fluid
- Replace rear differential gear oil (with-differential-lock model)

(1) Request the dealer to inspect the fluid deterioration data using a CONSULT. If the deterioration data is more than 77000, replace the AT fluid.
(2) If the oil replacement indicator is displayed, please change the engine oil and filter within two weeks or less than 500 miles (800 km). After replacing the engine oil, reset the display.
(3) Performed based on the number of service months only.
* Maintenance items and intervals with "*" are recommended by NISSAN for reliable vehicle operation. The owner need not perform such maintenance in order to maintain the emission warranty or manufacturer recall liability. Other maintenance items and intervals are required.

75,000 miles/(120,000 km)/90 months

Perform at number of miles, kilometers or months, whichever comes first.
Standard maintenance:
Not applicable. Proceed to the next interval.
Severe use maintenance:
Inspections:
- Brake pads & rotors
- Steering gear & linkage
- Axle & suspension parts
- Propeller shaft
- Drive shaft boots
- Exhaust system

Essential:
- Tire rotation

80,000 miles/(128,000 km)/96 months

Perform at number of miles, kilometers or months, whichever comes first.
Standard maintenance:
Inspections:
- Automatic transmission fluid (1)
- Brake lines
- Brake pads & rotors
- Engine drive belt*
- Fuel tank vapor vent system*
- Fuel lines/connections*
- Exhaust system
- Transfer case oil (4WD models)
- Front differential gear oil
- Rear differential gear oil (without-differential-lock model)
- Steering gear and linkage
- Axle & suspension parts
- Drive shaft boots
- Propeller shaft

Essential:
- Replace brake fluid
- Replace engine oil and oil filter (2)
- Replace rear differential gear oil (with-differential-lock model)
- Tire rotation
- Lubricate propeller shaft
- Replace In-cabin microfilter
- Replace Intelligent Key battery* (3)

Severe use maintenance:
Inspections:
- Brake pads & rotors
- Steering gear & linkage
- Axle & suspension parts
- Propeller shaft
- Drive shaft boots
- Exhaust system

Essential:
- Replace automatic transmission fluid
- Replace brake fluid
- Replace transfer case oil (4WD models)
- Replace front differential gear oil
- Replace rear differential gear oil (with-differential-lock model)
- Replace rear differential gear oil (without-differential-lock model)

(1) Request the dealer to inspect the fluid deterioration data using a CONSULT. If the deterioration data is more than 77000, replace the AT fluid.
(2) If the oil replacement indicator is displayed, please change the engine oil and filter within two weeks or less than 500 miles (800 km).
(3) Performed based on the number of service months only.
After replacing the engine oil, reset the display.
* Maintenance items and intervals with "*" are recommended by NISSAN for reliable vehicle operation. The owner need not perform such maintenance in order to maintain the emission warranty or manufacturer recall liability. Other maintenance items and intervals are required.

85,000 miles/(136,000 km)/102 months

Perform at number of miles, kilometers or months, whichever comes first.
Standard maintenance:
Not applicable. Proceed to the next interval.
Severe use maintenance:
Inspections:
- Brake pads & rotors
- Steering gear & linkage
- Axle & suspension parts
- Propeller shaft
- Drive shaft boots
- Exhaust system

Essential:
- Tire rotation

90,000 miles/(144,000 km)/108 months

Perform at number of miles, kilometers or months, whichever comes first.
Standard maintenance:
Inspections:
- Automatic transmission fluid (1)
- Brake lines
- Brake pads & rotors
- Engine drive belt*
- Transfer case oil (4WD models)
- Front differential gear oil
- Rear differential gear oil (with-differential-lock model)
- Rear differential gear oil (without-differential-lock model)
- Drive shaft boots
- Propeller shaft

Essential:
- Replace engine air filter (2)
- Replace engine oil and oil filter (3)
- Replace Intelligent Key battery* (4)
- Replace in-cabin microfilter
- Tire rotation
- Lubricate propeller shaft

Severe use maintenance:
Inspections:
- Brake pads & rotors
- Steering gear & linkage
- Axle & suspension parts
- Propeller shaft
- Drive shaft boots
- Exhaust system
- Front differential gear oil
- Rear differential gear oil (without-differential-lock model)

Essential:
- Replace brake fluid
- Replace rear differential gear oil (with-differential-lock model)

(1) Request the dealer to inspect the fluid deterioration data using a CONSULT. If the deterioration data is more than 77000, replace the AT fluid.
(2) If operating mainly in dusty conditions, more frequent maintenance may be required.
(3) If the oil replacement indicator is displayed, please change the engine oil and filter within two weeks or less than 500 miles (800 km). After replacing the engine oil, reset the display.
(4) Performed based on the number of service months only.
* Maintenance items and intervals with "*" are recommended by NISSAN for reliable vehicle operation. The owner need not perform such maintenance in order to maintain the emission warranty or manufacturer recall liability. Other maintenance items and intervals are required.

95,000 miles/(152,000 km)/114 months

Perform at number of miles, kilometers or months, whichever comes first.
Standard maintenance:
Not applicable. Proceed to the next interval.
Severe use maintenance:
Inspections:
- Brake pads & rotors
- Steering gear & linkage
- Axle & suspension parts
- Propeller shaft
- Drive shaft boots
- Exhaust system

Essential:
- Tire rotation

100,000 miles/(160,000 km)/120 months

Perform at number of miles, kilometers or months, whichever comes first.
Standard maintenance:
Inspections:
- Automatic transmission fluid (1)
- Brake lines
- Brake pads & rotors
- Engine drive belt*
- Fuel tank vapor vent system*
- Fuel lines/connections*
- Exhaust system
- Transfer case oil (4WD models)
- Front differential gear oil
- Rear differential gear oil (without-differential-lock model)
- Steering gear and linkage
- Axle & suspension parts
- Drive shaft boots
- Propeller shaft

Essential:
- Replace brake fluid
- Replace engine oil and oil filter (2)
- Replace rear differential gear oil (with-differential-lock model)
- Tire rotation
- Lubricate propeller shaft
- Replace In-cabin microfilter
- Replace Intelligent Key battery* (3)

Severe use maintenance:
Inspections:
- Brake pads & rotors
- Steering gear & linkage
- Axle & suspension parts
- Propeller shaft
- Drive shaft boots
- Exhaust system

Essential:
- Replace automatic transmission fluid
- Replace brake fluid
- Replace transfer case oil (4WD models)
- Replace front differential gear oil
- Replace rear differential gear oil (with-differential-lock model)
- Replace rear differential gear oil (without-differential-lock model)

(1) Request the dealer to inspect the fluid deterioration data using a CONSULT. If the deterioration data is more than 77000, replace the AT fluid.
(2) If the oil replacement indicator is displayed, please change the engine oil and filter within two weeks or less than 500 miles (800 km). After replacing the engine oil, reset the display.
(3) Performed based on the number of service months only.
* Maintenance items and intervals with "*" are recommended by NISSAN for reliable vehicle operation. The owner need not perform such maintenance in order to maintain the emission warranty or manufacturer recall liability. Other maintenance items and intervals are required.

105,000 miles/(168,000 km)/126 months

Perform at number of miles, kilometers or months, whichever comes first.

Standard maintenance:

Essential:

- Replace Engine coolant* (1)

Severe use maintenance:

Inspections:

- Brake pads & rotors
- Steering gear & linkage
- Axle & suspension parts
- Propeller shaft
- Drive shaft boots
- Exhaust system

Essential:

- Tire rotation

(1) First replacement interval is 105,000 miles (168,000 km) or 84 months. After first replacement, replace every 75,000 miles (120,000 km) or 60 months.

* Maintenance items and intervals with "*" are recommended by NISSAN for reliable vehicle operation. The owner need not perform such maintenance in order to maintain the emission warranty or manufacturer recall liability. Other maintenance items and intervals are required.

110,000 miles/(176,000 km)/132 months

Perform at number of miles, kilometers or months, whichever comes first.

Standard maintenance:

Inspections:

- Automatic transmission fluid (1)
- Brake lines
- Brake pads & rotors
- Engine drive belt*
- Transfer case oil (4WD models)
- Front differential gear oil
- Rear differential gear oil (with-differential-lock model)
- Rear differential gear oil (without-differential-lock model)
- Drive shaft boots
- Propeller shaft

Essential:

- Replace engine oil and oil filter (2)
- Tire rotation
- Lubricate propeller shaft
- Replace In-cabin microfilter
- Replace Intelligent Key battery* (3)

Severe use maintenance:

Inspections:

- Brake pads & rotors
- Steering gear & linkage
- Axle & suspension parts
- Propeller shaft
- Drive shaft boots
- Exhaust system
- Front differential gear oil
- Rear differential gear oil (without-differential-lock model)

Essential:

- Replace brake fluid
- Replace rear differential gear oil (with-differential-lock model)

(1) Request the dealer to inspect the fluid deterioration data using a CONSULT. If the deterioration data is more than 77000, replace the AT fluid.

(2) If the oil replacement indicator is displayed, please change the engine oil and filter within two weeks or less than 500 miles (800 km). After replacing the engine oil, reset the display.

(3) Performed based on the number of service months only.

* Maintenance items and intervals with "*" are recommended by NISSAN for reliable vehicle operation. The owner need not perform such maintenance in order to maintain the emission warranty or manufacturer recall liability. Other maintenance items and intervals are required.

115,000 miles/(184,000 km)/138 months

Perform at number of miles, kilometers or months, whichever comes first.
Standard maintenance:
Not applicable. Proceed to the next interval.
Severe use maintenance:
Inspections:
- Brake pads & rotors
- Steering gear & linkage
- Axle & suspension parts
- Propeller shaft
- Drive shaft boots
- Exhaust system

Essential:
- Tire rotation

120,000 miles/(192,000 km)/144 months

Perform at number of miles, kilometers or months, whichever comes first.
Standard maintenance:
Inspections:
- Automatic transmission fluid (1)
- Brake lines
- Brake pads & rotors
- Engine drive belt*
- Fuel tank vapor vent system*
- Fuel lines/connections*
- Exhaust system
- Transfer case oil (4WD models)
- Front differential gear oil
- Rear differential gear oil (without-differential-lock model)
- Steering gear and linkage
- Axle & suspension parts
- Drive shaft boots
- Propeller shaft

Essential:
- Replace engine air filter (2)
- Replace brake fluid
- Replace engine oil and oil filter (3)
- Replace rear differential gear oil (with-differential-lock model)
- Replace Intelligent Key battery* (4)
- Replace in-cabin microfilter
- Tire rotation
- Replace spark plugs
- Lubricate propeller shaft

Severe use maintenance:
Inspections:
- Brake pads & rotors
- Steering gear & linkage
- Axle & suspension parts
- Propeller shaft
- Drive shaft boots
- Exhaust system

Essential:
- Replace automatic transmission fluid
- Replace brake fluid
- Replace transfer case oil (4WD models)
- Replace front differential gear oil
- Replace rear differential gear oil (with-differential-lock model)
- Replace rear differential gear oil (without-differential-lock model)

(1) Request the dealer to inspect the fluid deterioration data using a CONSULT. If the deterioration data is more than 77000, replace the AT fluid.
(2) If operating mainly in dusty conditions, more frequent maintenance may be required.
(3) If the oil replacement indicator is displayed, please change the engine oil and filter within two weeks or less than 500 miles (800 km). After replacing the engine oil, reset the display.
(4) Performed based on the number of service months only.
* Maintenance items and intervals with "*" are recommended by NISSAN for reliable vehicle operation. The owner need not perform such maintenance in order to maintain the emission warranty or manufacturer recall liability. Other maintenance items and intervals are required.

10 Technical and consumer information

Capacities and recommended fluids/ lubricants 523
- Basic information 523
- Fuel 523
- Engine oil*1 523
- Engine coolant 523
- Automatic transmission fluid (ATF) 523
- Transfer case oil 523
- Front differential gear oil 523
- Rear differential gear oil 523
- Brake fluid 523
- Multi-purpose grease 523
- Air conditioning system refrigerant 523
- Air conditioning system oil 523
- Window washer fluid 524
- Fuel information 524
- Engine oil and oil filter recommendation 526
- Air conditioning system refrigerant and oil recommendations 527

Specifications 528
- Engine 528
- Wheels and tires 528
- Dimensions 528

When traveling or registering in another country 529

Vehicle identification 530
- Vehicle Identification Number (VIN) plate 530
- Vehicle identification number (chassis number) 530
- Engine serial number 530
- F.M.V.S.S./C.M.V.S.S. certification label 531
- Emission control information label 531
- Tire and loading information label 531
- Air conditioner specification label 532

Installing front license plate 532

Vehicle loading information 533
- Basic information 533
- Terms 533
- Vehicle load capacity 534
- Securing the load 536
- Loading tips 536
- Measurement of weights 537

Towing a trailer 537
- Basic information 537
- Maximum load limits 538
- Maximum Gross Vehicle Weight (GVW)/maximum Gross Axle Weight (GAW) 540
- Towing load/specification 541
- Towing safety 541

Flat towing your vehicle 555
Flat towing 555
Automatic Transmission 555
Uniform tire quality grading 556
Reporting safety defects 557
Readiness for Inspection/Maintenance (I/M) test 558
Emission control system warranty 558
Event Data Recorders (EDR) 559
Basic information 559
Additional data recording 559
Owner's manual/service manual order information 560

CAPACITIES AND RECOMMENDED FLUIDS/LUBRICANTS

BASIC INFORMATION

The following are approximate capacities. The actual refill capacities may be a little different. When refilling, follow the procedure instructed in the "8. Do-it-yourself" section to determine the proper refill capacity.

FUEL

- See "Fuel information" (P.524).
- Capacity (approximate)
  - Metric Measure: 89.3 L
  - US Measure: 23-5/8 gal
  - Imperial Measure: 19-5/8 gal

ENGINE OIL*1

Drain and refill

*1: For additional information, see "Changing engine oil and filter" (P.472).

- Genuine "NISSAN Motor Oil 0W-20 SP" (or equivalent) is recommended.
- If the above motor oil (or engine oil) is not available, a synthetic 0W-20 GF-6A SP motor oil (or engine oil) may be used. Damage caused by the use of motor oil (or engine oil) other than as recommended is not covered under NISSAN's New Vehicle Limited Warranty. For additional information, see "Engine oil and oil filter recommendation" (P.526).
- Capacity (approximate) with oil filter change
  - Metric Measure: 6.0 L
  - US Measure: 6-3/8 qt
  - Imperial Measure: 5-1/4 qt
- Capacity (approximate) without oil filter change
  - Metric Measure: 5.6 L
  - US Measure: 5-7/8 qt
  - Imperial Measure: 4-7/8 qt

ENGINE COOLANT

- Pre-diluted Genuine NISSAN Long Life Antifreeze/Coolant (blue) or equivalent
- Capacity (approximate) with reservoir
  - Metric Measure: 13 L
  - US Measure: 13-3/4 qt
  - Imperial Measure: 11-1/2 qt

AUTOMATIC TRANSMISSION FLUID (ATF)

- Genuine NISSAN Matic P ATF or equivalent
- NISSAN recommends using Genuine NISSAN Matic P ATF (or equivalent) ONLY in NISSAN automatic transmissions. Do not mix with other fluids. Using fluids that are not equivalent to Genuine NISSAN Matic P ATF may damage the automatic transmission. Damage caused by the use of fluids other than as recommended is not covered under the NISSAN's New Vehicle Limited Warranty.

TRANSFER CASE OIL

- Genuine NISSAN Transfer Fluid LV or equivalent
- Using oil other than Genuine NISSAN Transfer Fluid LV will damage the transfer, which is not covered by the warranty.

FRONT DIFFERENTIAL GEAR OIL

- Genuine NISSAN Differential Oil Hypoid Super GL-5 80W-90 or equivalent conventional (non-synthetic) oil

REAR DIFFERENTIAL GEAR OIL

- Genuine NISSAN HYPOID FLUID·S1 GL-5 75W-80 or equivalent

BRAKE FLUID

- Genuine NISSAN Super Heavy Duty Brake Fluid*2 or equivalent DOT 3

  *2: Available in mainland U.S.A. through a NISSAN dealer.
- Refill to the proper oil level according to the instructions in the "8. Do-it-yourself" section.

MULTI-PURPOSE GREASE

- NLGI No. 2 (Lithium soap base)

AIR CONDITIONING SYSTEM REFRIGERANT

- HFO-1234yf (R-1234yf)
- For additional information, see "Vehicle identification" (P.530) for air conditioner specification label.

AIR CONDITIONING SYSTEM OIL

- NISSAN A/C System Oil ND-OIL12 (PAG) or equivalent

WINDOW WASHER FLUID

- Genuine NISSAN Windshield Washer Concentrate Cleaner & Antifreeze or equivalent

FUEL INFORMATION

VR35DDTT engine (except for NISMO)

NISSAN recommends the use of unleaded premium gasoline with an octane rating of at least 91 AKI number (Research octane number 96) to obtain the maximum vehicle performance and best drivability, especially under the following conditions: towing, hot weather, high altitude, heavy acceleration, etc.

If unleaded premium gasoline is not available, you may use unleaded regular gasoline with an octane rating of at least 87 AKI number (Research octane number 91), but you may notice a decrease in performance.

VR35DDTT engine (for NISMO)

Use unleaded premium gasoline with an octane rating of at least 91 AKI (Anti-Knock Index) number (Research octane number 96).

NISSAN recommends the use of unleaded premium gasoline with 93 AKI number (Research octane number 98) to obtain the maximum vehicle performance and the best driveability in hot weather as well as other conditions, for example when towing a trailer.

If unleaded premium gasoline is not available, unleaded regular gasoline with an octane rating of at least 87 AKI number (Research octane number 91) may be temporarily used, but only under the following precautions:

- Have the fuel tank filled only partially with unleaded regular gasoline, and fill up with unleaded premium gasoline as soon as possible.
- Avoid full throttle driving and abrupt acceleration.

Use unleaded premium gasoline for maximum vehicle performance.

⚠ CAUTION

- **Using a fuel other than that specified could adversely affect the emission control system, and may also affect warranty coverage.**
- **Under no circumstances should a leaded gasoline be used, because this will damage the three-way catalyst.**
- **Do not use a fuel containing more than 15% ethanol in your vehicle. Your vehicle is not designed to run on a fuel containing more than 15% ethanol. Using a fuel containing more than 15% ethanol in a vehicle not specifically designed for a fuel containing more than 15% ethanol can adversely affect the emission control devices and systems of the vehicle. Damage caused by such fuel is not covered by the NISSAN new vehicle limited warranty.**
- **Do not use fuel that contains the octane booster methylcyclopentadienyl manganese tricarbonyl (MMT). Using fuel containing MMT may adversely affect vehicle performance and vehicle emissions. Not all fuel dispensers are labeled to indicate MMT content, so you may have to consult your gasoline dealer for more details. Note that Federal and California laws prohibit the use of MMT in reformulated gasoline.**
- **U.S. government regulations require ethanol dispensing pumps to be identified by a small, square, orange and black label with the common abbreviation or the appropriate percentage for that region.**

Gasoline specifications

NISSAN recommends using gasoline that

meets the World-Wide Fuel Charter (WWFC) specifications where it is available. Many of the automobile manufacturers developed this specification to improve emission system and vehicle performance. Ask your service station manager if the gasoline meets the World-Wide Fuel Charter (WWFC) specifications.

Reformulated gasoline

Some fuel suppliers are now producing reformulated gasolines. These gasolines are specially designed to reduce vehicle emissions. NISSAN supports efforts towards cleaner air and suggests that you use reformulated gasoline when available.

Gasoline containing oxygenates

Some fuel suppliers sell gasoline containing oxygenates such as ethanol, MTBE and methanol with or without advertising their presence. NISSAN does not recommend the use of fuels of which the oxygenate content and the fuel compatibility for your NISSAN cannot be readily determined. If in doubt, ask your service station manager.

If you use oxygenate-blend gasoline, please take the following precautions as the usage of such fuels may cause vehicle performance problems and/or fuel system damage.

- **The fuel should be unleaded and have an octane rating no lower than that recommended for unleaded gasoline.**
- **If an oxygenate-blend, excepting a methanol blend, is used, it should contain no more than 10% oxygenate. (MTBE may, however, be added up to 15%.)**
- **If a methanol blend is used, it should contain no more than 5% methanol (methyl alcohol, wood alcohol). It should also contain a suitable amount of appropriate cosolvents and corrosion inhibitors. If not properly formulated with appropriate cosolvents and corrosion inhibitors, such methanol blends may cause fuel system damage and/or vehicle performance problems. At this time, sufficient data is not available to ensure that all methanol blends are suitable for use in NISSAN vehicles.**

If any undesirable driveability problems such as engine stalling or hard hot starting are experienced after using oxygenate-blend fuels, immediately change to a non-oxygenate fuel or a fuel with a low blend of MTBE.

Take care not to spill gasoline during refueling. Gasoline containing oxygenates can cause paint damage.

E-15 fuel

E-15 fuel is a mixture of approximately 15% fuel ethanol and 85% unleaded gasoline. E-15 can only be used in vehicles designed to run on E- 15 fuel. U.S. government regulations require fuel ethanol dispensing pumps to be identified with small, square, orange and black label with the common abbreviation or the appropriate percentage for that region.

E-85 fuel

E-85 fuel is a mixture of approximately 85% fuel ethanol and 15% unleaded gasoline. E-85 can only be used in a Flexible Fuel Vehicle (FFV). Do not use E-85 fuel in your vehicle. U.S. government regulations require fuel ethanol dispensing pumps to be identified by a small, square, orange and black label with the common abbreviation or the appropriate percentage for that region.

Fuel containing MMT

MMT, or methylcyclopentadienyl manganese tricarbonyl, is an octane boosting additive. NISSAN does not recommend the use of fuel containing MMT. Such fuel may adversely affect vehicle performance, including the emissions control system. Note that while some fuel pumps label MMT content, not all do, so you may have to consult your gasoline retailer for more details.

Aftermarket fuel additives

NISSAN does not recommend the use of any aftermarket fuel additives (Example: fuel injector cleaner, octane booster, intake valve deposit removers, etc.) which are sold commercially. Many of these additives intended for gum, varnish or deposit removal may contain active solvent or similar ingredients that can be harmful to the fuel system and

engine.

Octane rating tips

Using unleaded gasoline with an octane rating lower than recommended above can cause persistent, heavy spark knock. (Spark knock is a metallic rapping noise.) If severe, this can lead to engine damage. If you detect a persistent heavy spark knock even when using gasoline of the stated octane rating, or if you hear steady spark knock while holding a steady speed on level roads, it is recommended you have a NISSAN dealer correct the condition. Failure to correct the condition is misuse of the vehicle, for which NISSAN is not responsible.

Incorrect ignition timing will result in knocking, after-run or overheating. This in turn may cause excessive fuel consumption or damage to the engine. If any of the above symptoms are encountered, have your vehicle checked. It is recommended you visit a NISSAN dealer for servicing.

However, now and then you may notice light spark knock for a short time while accelerating or driving up hills. This is no cause for concern, because you get the greatest fuel benefit when there is light spark knock for a short time under heavy engine load.

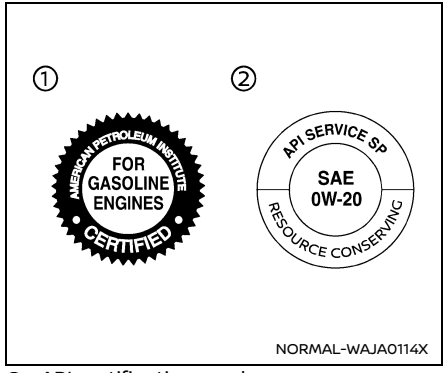

① API certification mark
② API service symbol

ENGINE OIL AND OIL FILTER RECOMMENDATION

Selecting the correct oil

It is essential to choose the correct grade, quality, and viscosity engine oil to ensure satisfactory engine life and performance, see "Capacities and recommended fluids/lubricants" (P.523). NISSAN recommends the use of an energy conserving oil in order to improve fuel economy.

Select only engine oils that meet the American Petroleum Institute (API) certification or International Lubricant Standardization and Approval Committee (ILSAC) certification and SAE viscosity standard. These oils have the API certification mark on the front of the container. Oils which do not have the specified quality label should not be used as they could cause engine damage.

Oil additives

NISSAN does not recommend the use of oil additives. The use of an oil additive is not necessary when the proper oil type is used and maintenance intervals are followed.

Oil which may contain foreign matter or has been previously used should not be used.

Oil viscosity

The engine oil viscosity or thickness changes with temperature. Because of this, it is important that the engine oil viscosity be selected based on the temperatures at which the vehicle will be operated before the next oil change. Choosing an oil viscosity other than that recommended could cause serious engine damage.

Selecting the correct oil filter

Your new vehicle is equipped with a high-quality genuine NISSAN oil filter. When replacing, use the genuine oil filter or its equivalent for the reason described in change intervals.

Change intervals

The oil and oil filter change intervals for your engine are based on the use of the specified

quality oils and filters. Oil and filter other than the specified quality, or oil and filter change intervals longer than recommended could reduce engine life. Damage to engines caused by improper maintenance or use of incorrect oil and filter quality and/or viscosity is not covered by the new NISSAN vehicle limited warranties.

Your engine was filled with a high quality engine oil when it was built. You do not have to change the oil before the first recommended change interval. Oil and filter change intervals depend upon how you use your vehicle.

Operation under the following conditions may require more frequent oil and filter changes

A - Driving under dusty conditions
B - Driving repeatedly short distances
C - Towing a trailer or caravan
D - Extensive idling
E - Driving in extremely adverse weather conditions or in areas where ambient temperatures are either extremely low or extremely high
F - Driving in high humidity
G - Driving on rough and/or muddy roads or in the desert
H - Driving with frequent use of braking or in mountainous areas

AIR CONDITIONING SYSTEM REFRIGERANT AND OIL RECOMMENDATIONS

The air conditioner system in your NISSAN vehicle must be charged with the refrigerant HFO-1234yf (R-1234yf) and NISSAN A/C System Oil ND-OIL12 (PAG) or the exact equivalents.

CAUTION

The use of any other refrigerant or oil will cause severe damage to the air conditioning system and will require the replacement of all air conditioner system components.

The refrigerant HFO-1234yf (R-1234yf) in your NISSAN vehicle does not harm the earth's ozone layer. Although this refrigerant does not affect the earth's atmosphere, certain government regulations require the recovery and recycling of any refrigerant during automotive air conditioner system service. Air conditioner system should only be serviced by trained and certified technicians to ensure proper and safe operation (SAE J2845). A NISSAN dealer has the trained technicians and equipment needed to recover and recycle your air conditioner system refrigerant. Only new and SAEJ2842 certified evaporator(s) shall be used as replacement parts.

A damaged or leaking air conditioning evaporator shall never be repaired or replaced with one removed from a used or salvaged vehicle. To replace a damaged or leaking evaporator, use only new and SAE J2842 certified evaporator(s). It is recommended that you visit a NISSAN dealer when servicing your air conditioner system.

SPECIFICATIONS

ENGINE

- Model
  - VR35DDTT
- Type
  - Gasoline, 4-cycle
- Cylinder arrangement
  - 6-cylinder, V-slanted at 60°
- Bore × Stroke
  - Metric measure: 86.0 × 100.2 mm
  - US measure: 3.386 × 3.945 in
- Displacement
  - Metric measure: 3,492 cm^3
  - US measure: 213.08 cu in
- Firing order
  - 1-2-3-4-5-6
- Idle speed
  - No adjustment is necessary.
- Ignition timing (B.T.D.C.)
  - No adjustment is necessary.
- Spark plug
  - Standard: ILKAR8AB8G
- Spark plug gap (Normal)
  - Metric measure: 0.8 mm
  - US measure: 0.031 in
- Camshaft operation
  - Timing chain

This spark ignition system complies with the Canadian standard ICES-002.

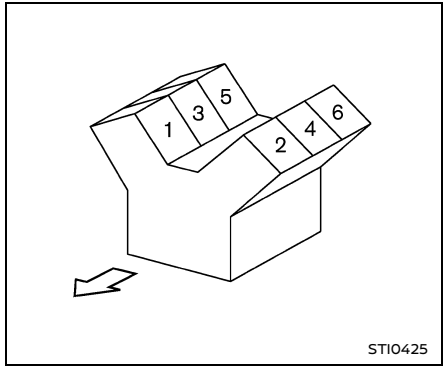

WHEELS AND TIRES

Road wheel

- Conventional (Size: 18 x 8J)
  - Offset - Metric measure 45 mm
  - Offset - US measure 1.77 in
- Conventional (Size: 20 × 8.5J)
  - Offset - Metric measure 45 mm
  - Offset - US measure 1.77 in
- Conventional (Size: 22 × 8.5J)
  - Offset - Metric measure 45 mm
  - Offset - US measure 1.77 in
- Spare (Size: 18 x 8J)
  - Offset - Metric measure 45 mm
  - Offset - US measure 1.77 in

Tire

- Conventional (Size: 265/70R18 116H)
  - Pressure PSI [Cold]: 35
  - Pressure kPa [Cold]: 240
- Conventional (Size: 275/60R20 115H)
  - Pressure PSI [Cold]: 35
  - Pressure kPa [Cold]: 240
- Conventional (Size: 275/60R20 115H (ALL TERRAIN))
  - Pressure PSI [Cold]: 35
  - Pressure kPa [Cold]: 240
- Conventional (Size: 275/50R22 111H)
  - Pressure PSI [Cold]: 35
  - Pressure kPa [Cold]: 240
- Spare (Size: 265/70R18 116H (with 22 or 20 inch conventional tire))
  - Pressure PSI [Cold]: 51
  - Pressure kPa [Cold]: 350
- Spare (Size: 265/70R18 116H (with 18 inch conventional tire))
  - Pressure PSI [Cold]: 35
  - Pressure kPa [Cold]: 240

DIMENSIONS

Overall length

- Metric measure: 5,325 mm*10
  US measure: 209.6 in*10
- Metric measure: 5,360 mm*9
  US measure: 211.0 in*9

Overall width (mirror folded)

- Metric measure: 2,115 mm
  US measure: 83.3 in

Overall height

- Metric measure: 1,945 mm*1*2*6*9
  US measure: 76.6 in*1*2*6*9
- Metric measure: 1,955 mm*3
  US measure: 77.0 in*3
- Metric measure: 1,980 mm*4
  US measure: 78.0 in*4
- Metric measure: 1,990 mm*5
  US measure: 78.3 in*5

Front tread

- Metric measure: 1,728 mm*7
  US measure: 68.0 in*7
- Metric measure: 1,731 mm*8*9
  US measure: 68.1 in*8*9

Rear tread

- Metric measure: 1,724 mm*7
  US measure: 67.9 in*7
- Metric measure: 1,728 mm*8*9
  US measure: 68.0 in*8*9

Wheelbase

- Metric measure: 3,075 mm
  US measure: 121.1 in

*1 : Models with 18 inch wheels
*2 : Models with 22 inch wheels (without ProPILOT Assist 2.1)
*3 : Models with 20 inch wheels (without air suspension, without ProPILOT Assist 2.1)
*4 : Models with 22 inch wheels (with ProPILOT Assist 2.1)
*5 : Models with 20 inch wheels (without air suspension, with ProPILOT Assist 2.1)
*6 : Models with 20 inch wheels (with air suspension)
*7 : Models without air suspension
*8 : Models with air suspension
*9 : For NISMO models
*10 : Except for NISMO models

WHEN TRAVELING OR REGISTERING IN ANOTHER COUNTRY

If you plan to travel in another country, you should first find out if the fuel available is suitable for your vehicle's engine.

Using fuel with too low an octane rating may cause engine damage. All gasoline vehicles must be operated with unleaded gasoline. Therefore, avoid taking your vehicle to areas where appropriate fuel is not available.

When transferring the registration of your vehicle to another country, state, province or district, it may be necessary to modify the vehicle to meet local laws and regulations.

The laws and regulations for motor vehicle emission control and safety standards vary according to the country, state, province or district; therefore, vehicle specifications may differ.

When any vehicle is to be taken into another country, state, province or district and registered, its modifications, transportation, and registration are the responsibility of the user. NISSAN is not responsible for any inconvenience that may result.

VEHICLE IDENTIFICATION

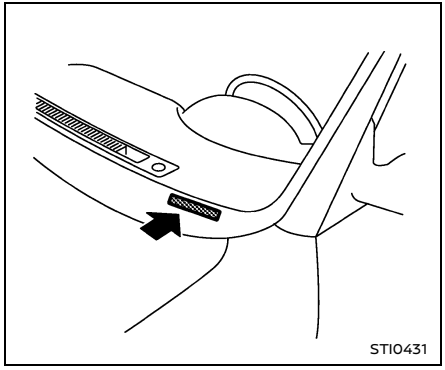

VEHICLE IDENTIFICATION NUMBER (VIN) PLATE

The vehicle identification number plate is attached as shown. This number is the identification for your vehicle and is used in the vehicle registration.

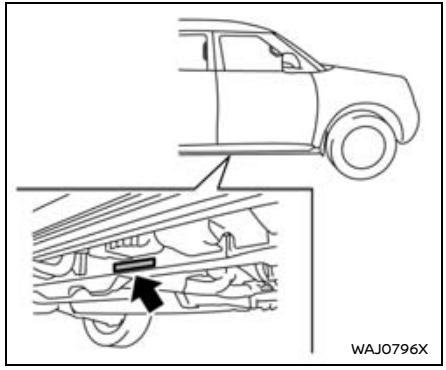

VEHICLE IDENTIFICATION NUMBER (chassis number)

The number is stamped as shown.

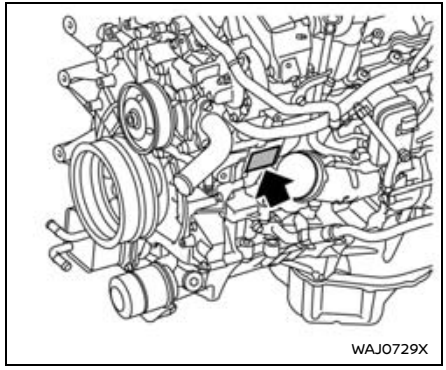

ENGINE SERIAL NUMBER

The number is stamped on the engine as shown.

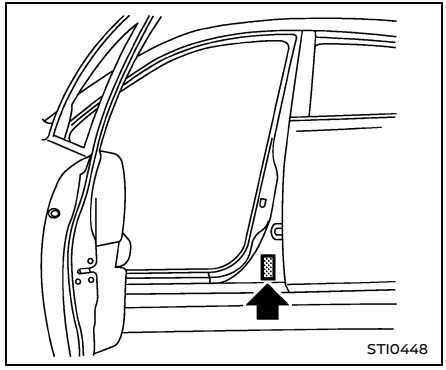

F.M.V.S.S./C.M.V.S.S. CERTIFICATION LABEL

The Federal/Canadian Motor Vehicle Safety Standards (F.M.V.S.S./C.M.V.S.S.) certification label is affixed as shown. This label contains valuable vehicle information, such as: Gross Vehicle Weight Ratings (GVWR), Gross Axle Weight Rating (GAWR), month and year of manufacture, Vehicle Identification Number (VIN), etc. Review it carefully.

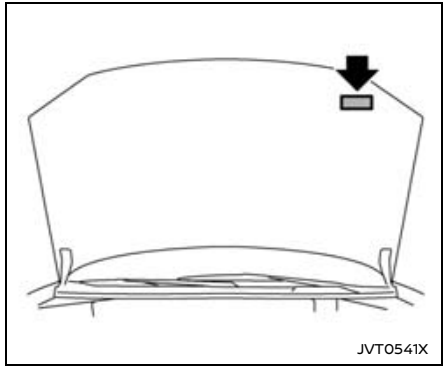

EMISSION CONTROL INFORMATION LABEL

The emission control information label is attached as shown.

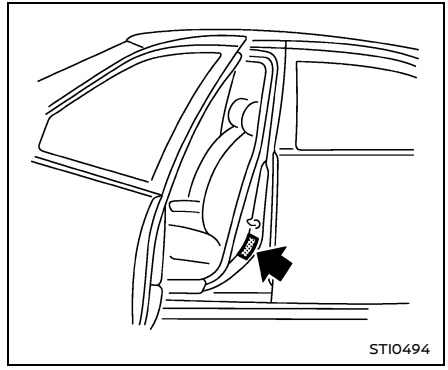

TIRE AND LOADING INFORMATION LABEL

The cold tire pressure is shown on the Tire and Loading Information label affixed to the pillar as illustrated.

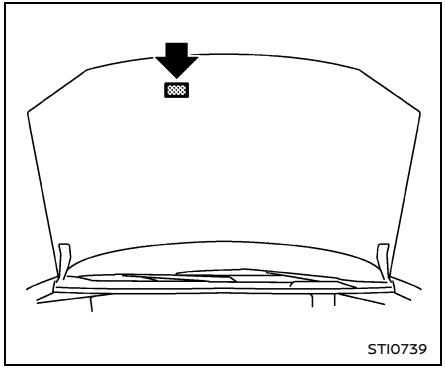

AIR CONDITIONER SPECIFICATION LABEL

The air conditioner specification label is attached as shown.

Air conditioner specification label symbols:

Caution symbol



- Reference
  - ISO 7000 0434

Air Conditioning System symbol (MAC)



- Reference
  - ISO 2575 D01

MAC System Lubricant Type symbol (PAG–POE)



Requires Registered Technician to Service MAC System symbol



Flammable Refrigerant symbol



INSTALLING FRONT LICENSE PLATE

To install the front license plate bracket to your vehicle, it is recommended you contact a NISSAN dealer.

BASIC INFORMATION

⚠ WARNING

- **It is extremely dangerous to ride in a cargo area inside the vehicle. In a collision, people riding in these areas are more likely to be seriously injured or killed.**
- **Do not allow people to ride in any area of vehicle that is not equipped with seats and seat belts. In a collision, people riding in these areas are more likely to be seriously injured or killed.**
- **To minimize the risk of severe injury or death in the event of crash be sure everyone in your vehicle is in a seat and using a seat belt properly.**
- **Never allow passengers to ride inside a trailer while it is being towed because there are no passenger restraints in a trailer. Not only is this unlawful in most areas, passengers could be seriously injured or killed during sudden trailer movement or in an accident. In addition, trailers may allow fumes from the tow vehicle to leak inside. This could result in carbon monoxide poisoning from the engine exhaust.**

TERMS

It is important to familiarize yourself with the following terms before loading your vehicle:

- Curb Weight (actual weight of your vehicle) - vehicle weight including: standard and optional equipment, fluids, emergency tools, and spare tire assembly. This weight **does not** include passengers and cargo.
- GVW (Gross Vehicle Weight) - curb weight plus the combined weight of passengers and cargo.
- GVWR (Gross Vehicle Weight Rating) - maximum total combined weight of the unloaded vehicle, passengers, luggage, hitch, trailer tongue load and any other optional equipment. This information is located on the F.M.V.S.S./C.M.V.S.S. label.
- GAWR (Gross Axle Weight Rating) - maximum weight (load) limit specified for the front or rear axle. This information is located on the F.M.V.S.S./C.M.V.S.S. label.
- GCWR (Gross Combined Weight Rating) - The maximum total weight rating of the vehicle, passengers, cargo, and trailer.
- Vehicle Capacity Weight, Load limit, Total load capacity - maximum total weight limit specified of the load (passengers and cargo) for the vehicle. This is the maximum combined weight of occupants and cargo that can be loaded into the vehicle. If the vehicle is used to tow a trailer, the trailer tongue weight must be included as part of the cargo

load. This information is located on the Tire and Loading Information label.
- Cargo capacity - permissible weight of cargo, the weight of total occupants weight subtracted from the load limit.

VEHICLE LOAD CAPACITY

Basic information

Before driving a loaded vehicle, confirm that you do not exceed the Gross Vehicle Weight Rating (GVWR) or the Gross Axle Weight Rating (GAWR) for your vehicle. Both the GVWR and GAWR are located on the F.M.V.S.S./C.M.V.S.S. certification label. For additional information, see "Measurement of weights" (P.537).

Do not exceed the load limit of your vehicle shown as “The combined weight of occupants and cargo” on the Tire and Loading Information label. Do not exceed the number of occupants shown as “Seating Capacity” on the Tire and Loading Information label.

To get “the combined weight of occupants and cargo”, add the weight of all occupants, then add the total luggage weight. Examples are shown in the illustration.

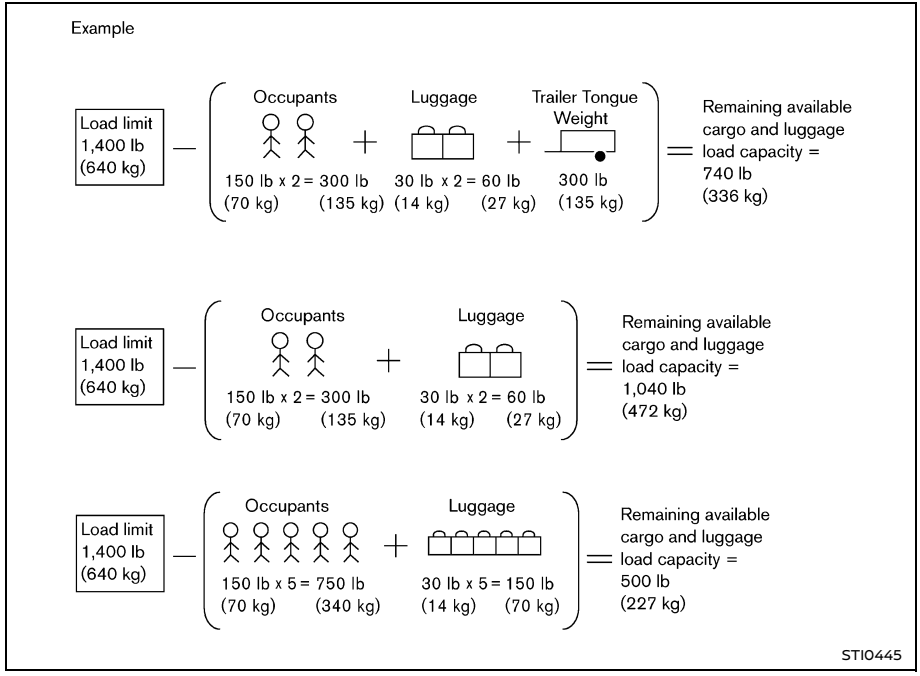

Steps For Determining Correct Load Limit

1. Locate the statement "The combined weight of occupants and cargo should never exceed XXX kg or XXX lbs." on your vehicle's placard.
2. Determine the combined weight of the driver and passengers that will be riding in your vehicle.
3. Subtract the combined weight of the driver and passengers from XXX kg or XXX lbs.
4. The resulting figure equals the available amount of cargo and luggage load capacity. For example, if the "XXX" amount equals 1400 lbs. and there will be five 150 lb passengers in your vehicle, the amount of available cargo and luggage load capacity is 650 lbs. (1400 – 750 (5 x 150) = 650 lbs.)
5. Determine the combined weight of luggage and cargo being loaded on the vehicle. That weight may not safely exceed the available cargo and luggage load capacity calculated in Step 4.
6. If your vehicle will be towing a trailer, load from your trailer will

be transferred to your vehicle. Consult this manual to determine how this reduces the available cargo and luggage load capacity of your vehicle.

Before driving a loaded vehicle, confirm that you do not exceed the Gross Vehicle Weight Rating (GVWR) or the Gross Axle Weight Rating (GAWR) for your vehicle. (See "Measurement of weights" (P.537).)

Also check tires for proper inflation pressures. See the Tire and Loading Information label.

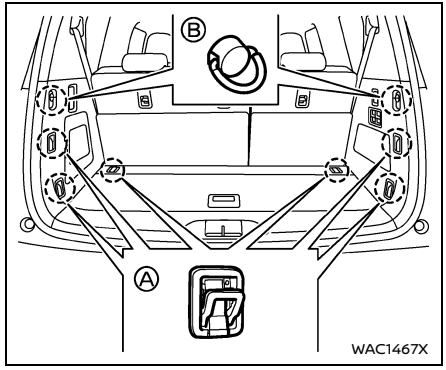

SECURING THE LOAD

There are tie down hooks located in the cargo area as shown. The tie down hooks can be used to secure cargo with ropes or other types of straps.

Do not apply a total load of more than 22 lb (10 kg) to a single hook Ⓐ or 7 lb (3 kg) to a single hook Ⓑ when securing cargo.

⚠ WARNING

- **Properly secure all cargo with ropes or straps to help prevent it from sliding or shifting. Do not place cargo higher than the seatbacks. In a sudden stop or collision, unsecured cargo could cause personal injury.**
- **The child restraint top tether strap may be damaged by contact with items in the cargo area. Secure any items in the cargo area. Your child could be seriously injured or killed in a collision if the top tether strap is damaged.**
- **Do not load your vehicle any heavier than the GVWR or the maximum front and rear GAWRs. If you do, parts of your vehicle can break, tire damage could occur, or it can change the way your vehicle handles. This could result in loss of control and cause personal injury.**
- **Overloading not only can shorten the life of your vehicle and the tire, but can also cause unsafe vehicle handling and longer braking distances. This may cause a premature tire failure which could result in a serious accident and personal injury. Failures caused by overloading are not covered by the vehicle's warranty.**

LOADING TIPS

- The GVW must not exceed GVWR or GAWR as specified on the F.M.V.S.S./C.M.V.S.S. certification label.

- Do not load the front and rear axle to the GAWR. Doing so will exceed the GVWR.

⚠ WARNING

- **Properly secure all cargo to help prevent it from sliding or shifting. Do not place cargo higher than the seatbacks. In a sudden stop or collision, unsecured cargo could cause personal injury.**
- **Do not load your vehicle any heavier than the GVWR or the maximum front and rear GAWRs. If you do, parts of your vehicle can break, tire damage could occur, or it can change the way your vehicle handles. This could result in loss of control and cause personal injury.**
- **Overloading not only can shorten the life of your vehicle and the tire, but can cause unsafe vehicle handling and long braking distance. This may cause a premature tire failure, which could result in a serious accident and personal injury. Failures caused by overloading are not covered by the vehicle's warranty.**

MEASUREMENT OF WEIGHTS

Secure loose items to prevent weight shifts that could affect the balance of your vehicle. When the vehicle is loaded, drive to a scale and weigh the front and the rear wheels separately to determine axle loads. Individual axle loads should not exceed either of the Gross Axle Weight Ratings (GAWR). The total of the axle loads should not exceed the Gross Vehicle Weight Rating (GVWR). These ratings are given on the vehicle certification label. If weight ratings are exceeded, move or remove items to bring all weights below the ratings.

BASIC INFORMATION

⚠ WARNING

Failure to follow the warnings and instructions about towing a trailer may result in loss of vehicle control and cause an accident resulting in property damage and serious injury or death:

- **Overloading or improper loading of a trailer and its cargo can adversely affect vehicle handling, braking and performance.**
- **Do not modify your vehicle beyond what is required for proper hitch installation, wiring hook-up, or adding extended mirrors on any NISSAN vehicle being used for towing purposes. Changes to the drivetrain suspension, exhaust systems, frame structure/unibody, or other vehicle components are not necessary for towing within the limits described. The towing limits of your vehicle cannot be increased beyond the published limits described in this manual. Any changes may diminish reliability and longevity of your vehicle, and void warranty coverage.**

- **Be aware that your automotive jack is designed for lifting only your vehicle during a tire change. Using an automotive jack to lift a trailer may cause the trailer to fall off the jack stand.**
- **Never use a clamp-on-type hitch. The hitch should not be attached to or affect the operation of the impact-absorbing bumper. Use only a permanent-type hitch properly attached to the vehicle. If the trailer separates from the vehicle, it could cause a crash. Use of this type of hitch can also damage the towing vehicle.**

⚠ CAUTION

- **Do not tow a trailer or haul a heavy load until you drive your vehicle at least 500 miles (800 km). Your engine, axle or other parts could be damaged.**
- **For the first 500 miles (800 km) that you tow a trailer, do not drive over 50 MPH (80 km/h) and do not make starts at full throttle. This helps the engine and other parts of your vehicle wear in at the heavier loads.**
- **Premium gasoline with 91 AKI number (Research octane number 96) is strongly recommended, especially when trailer towing, to maximize engine overall performance.**

  If fuel other than premium fuel is used, especially in hot weather, during trailer towing or climbing a hill with a heavy load, coolant temperature may increase and engine power could decrease due to engine protection mode. Your vehicle's performance may be reduced if this mode activates. If this occurs, avoid making full-throttle starts.

Your new vehicle was designed to be used primarily to carry passengers and cargo. Remember that towing a trailer places additional loads on your vehicle's engine, drivetrain, steering, braking and other systems.

MAXIMUM LOAD LIMITS

Maximum trailer loads

Never allow the total trailer load to exceed the value specified in the "Towing load/specification" (P.541). The total trailer load equals trailer weight plus its cargo weight.

- **When towing a trailer load of 3,500 lbs (1,587 kg) or more, trailers with a brake system MUST be used.**

The maximum Gross Combined Weight Rating (GCWR) should not exceed the value specified in the following "Towing Load/Specification" list.

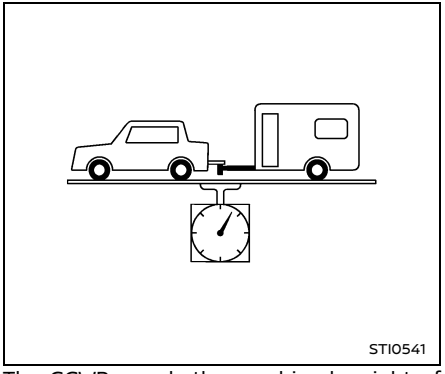

The GCWR equals the combined weight of the towing vehicle (including passengers and cargo) plus the total trailer load.

Towing loads greater than these or using improper towing equipment could adversely affect vehicle handling, braking and performance.

The ability of your vehicle to tow a trailer is not only related to the maximum trailer loads, but also the places you plan to tow. Tow weights appropriate for level highway driving may have to be reduced on very steep grades or for low traction situations (for example, on slippery boat ramps).

Temperature conditions can also affect towing. For example, towing a heavy trailer in high outside temperatures on graded roads can affect engine performance and cause overheating. The transmission high fluid temperature and engine protection mode, which helps reduce the chance of transmission and engine damage, could activate and automatically decrease engine power. Vehicle speed may decrease under high load. Plan your trip carefully to account for trailer and vehicle load, weather and road conditions.

⚠ WARNING

Overheating can result in reduced engine power and vehicle speed. The reduced speed may be lower than other traffic, which could increase the chance of a collision. Be especially careful when driving. If the vehicle cannot maintain a safe driving speed, pull to the side of the road in a safe area. Allow the engine to cool and return to normal operation. See "If your vehicle overheats" (P.453).

⚠ CAUTION

Vehicle damage resulting from improper towing procedures is not covered by NISSAN warranties.

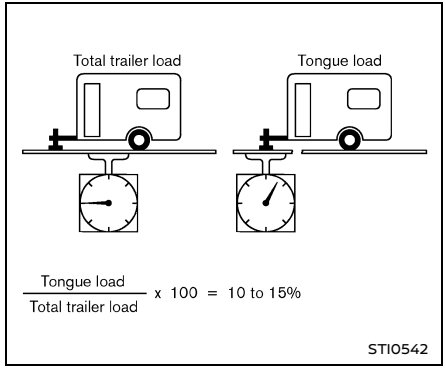

Tongue load

The tongue is the part of the trailer that extends forward to meet the tow vehicle, and it carries the coupler assembly.

When using a weight carrying or a weight distributing hitch, keep the tongue load between 10 to 15% of the total trailer load or use the trailer tongue load specified by the trailer manufacturer. The tongue load must be within the maximum tongue load limits shown in the following “Towing Load/Specification” list. If the tongue load becomes excessive, rearrange cargo to allow for proper tongue load.

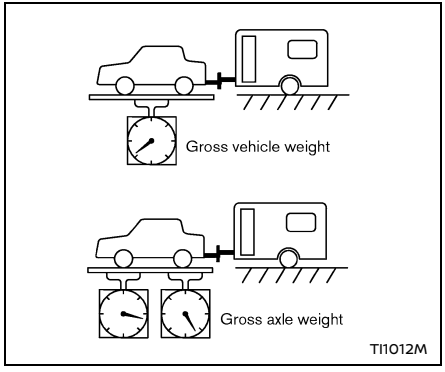

MAXIMUM GROSS VEHICLE WEIGHT (GVW)/MAXIMUM GROSS AXLE WEIGHT (GAW)

The GVW of the towing vehicle must not exceed the Gross Vehicle Weight Rating (GVWR) shown on the F.M.V.S.S./C.M.V.S.S. certification label. The GVW equals the combined weight of the unloaded vehicle, passengers, luggage, hitch, trailer tongue load and any other optional equipment. In addition, front or rear GAW must not exceed the Gross Axle Weight Rating (GAWR) shown on the F.M.V.S.S./C.M.V.S.S. certification label.

Towing capacities are calculated assuming a base vehicle with driver and any options required to achieve the rating. Additional passengers, cargo and/or optional equipment, such as the trailer hitch, will add weight to the vehicle and reduce your vehicle's maximum towing capacity and trailer tongue load.

The vehicle and trailer need to be weighed to confirm the vehicle is within the GVWR, Front GAWR, Rear GAWR, Gross Combined Weight Rating (GCWR) and Towing capacity.

All vehicle and trailer weights can be measured using platform type scales commonly found at truck stops, highway weigh stations, building supply centers or salvage yards.

To determine the available payload capacity for tongue/king pin load, use the following procedure.

1. Locate the GVWR on the F.M.V.S.S./C.M.V.S.S. certification label.
2. Weigh your vehicle on the scale with all of the passengers and cargo that are normally in the vehicle when towing a trailer.
3. Subtract the actual vehicle weight from the GVWR. The remaining amount is the available maximum tongue/king pin load.

To determine the available towing capacity, use the following procedure.

1. Find the GCWR for your vehicle on the "Towing Load/Specification" list found later in this section.
2. Subtract the actual vehicle weight from the GCWR. The remaining amount is the available maximum towing capacity.

To determine the Gross Trailer Weight, weigh your trailer on a scale with all equipment and cargo, that are normally in the trailer when it is towed. Make sure the Gross trailer weight is not more than the Gross Trailer Weight Rating shown on the trailer and is not more than the calculated available maximum towing capacity.

Also weigh the front and rear axles on the scale to make sure the Front Gross Axle Weight and Rear Gross Axle Weight are not more than Front Gross Axle Weight and Rear Gross Axle Weight on the F.M.V.S.S./C.M.V.S.S. certification label. The cargo in the trailer and vehicle may need to be moved or removed to meet the specified ratings.

Example:

- Gross Vehicle Weight (GVW) as weighed on a scale - including passengers, cargo and hitch - 6,450 lb. (2,926 kg).
- Gross Vehicle Weight Rating (GVWR) from F.M.V.S.S./C.M.V.S.S. certification label - 7,300 lb. (3,311 kg).
- Gross Combined Weight Rating (GCWR) from "Towing Load/Specification" list - 14,550 lb. (6,600 kg).
- Maximum Trailer towing capacity from "Towing Load/Specification" list - 8,500 lb. (3,856 kg).

GVWR: 7,300 lb. (3,311 kg)
GVW: – 6,450 lb. (2,926 kg)
Available for tongue weight = 850 lb. (385 kg)

GCWR: 14,550 lb. (6,600 kg)
GVW: – 6,450 lb. (2,926 kg)
Capacity available for towing = 8,100 lb.

(3,674 kg)

Available tongue weight: 850 lb. (385 kg) /
Available capacity: 8,100 lb. (3,674 kg)
= 11 % tongue weight

The available towing capacity may be less than the maximum towing capacity due to the passenger and cargo load in the vehicle.
Remember to keep trailer tongue weight between 10 - 15% of the trailer weight or within the trailer tongue load specification recommended by the trailer manufacturer. If the tongue load becomes excessive, rearrange the cargo to obtain the proper tongue load. Do not exceed the maximum tongue weight specification shown in the "Towing load/specification" list even if the calculated available tongue weight is greater than 15%. If the calculated tongue weight is less than 10%, reduce the total trailer weight to match the available tongue weight.
Always verify that available capacities are within the required ratings.

TOWING LOAD/SPECIFICATION

⚠ WARNING

The towing capacities provided in this manual are for general reference only. The safe towing capacity of your vehicle is affected by dealer and factory installed options and passenger and cargo loads. You must weigh the vehicle and trailer as described in this manual to determine the actual vehicle towing capacity. Do not exceed the published maximum towing capacity, or the GCWR or the GVWR shown on the F.M.V.S.S./C.M.V.S.S. certification label. Doing so can result in an accident causing serious personal injury or property damage.

Maximum Towing Capacity
The towing capacity values are calculated assuming a base vehicle with driver and any options required to achieve the rating. Additional passengers, cargo and/or optional equipment will add weight to the vehicle and reduce your vehicle's maximum towing capacity.
Use of a weight-distributing hitch system is recommended when towing over 5,000 lbs (2,267 kg).
- Metric Measure: 3,856 kg
- US Measure: 8,500 lbs.

Maximum Tongue Load
- Metric Measure: 385 kg
- US Measure: 850 lbs.

Maximum Gross Combined Weight Rating
- Metric Measure: 6,804 kg
- US Measure: 15,000 lbs.

TOWING SAFETY

Trailer hitch

Your vehicle is equipped with a trailer tow package. The trailer tow package includes a receiver-type frame mounted hitch. This hitch is rated for the maximum towing capacity of this vehicle when the proper towing equipment is used.
Choose a proper ball mount and hitch ball that is rated for the trailer to be towed. Genuine NISSAN ball mounts and hitch balls are available from a NISSAN dealer.

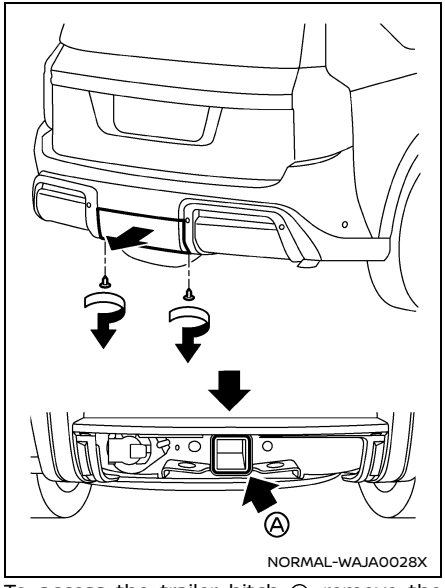

NORMAL-WAJA0028X

To access the trailer hitch Ⓐ, remove the trailer hitch cover located on the lower part of the rear bumper.

To remove the trailer hitch cover:

1. Remove the 2 clips by turning them counterclockwise.
2. Pull the bottom of the cover straight backward to remove the inner side and upper clips.

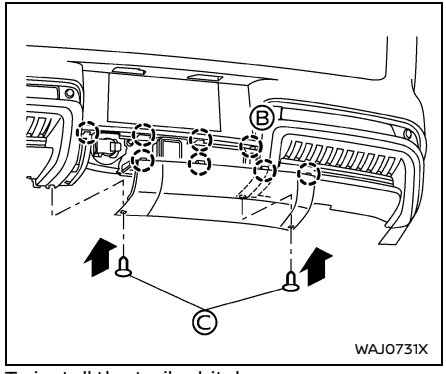

WAJ0731X

To install the trailer hitch cover:

1. Insert the upper clips into the recesses Ⓑ, and then push the cover to its original position.
2. Install the 2 clips Ⓒ by pushing them in as illustrated.

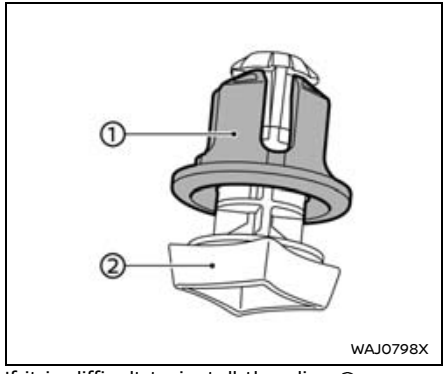

WAJ0798X

If it is difficult to install the clips Ⓒ, remove the grommet ① from the pin ② beforehand. Insert the grommet ① into the bumper and the cover, then push the pin ② into the grommet ①.

⚠ WARNING

- **Trailer hitch components have specific weight ratings. Your vehicle may be capable of towing a trailer heavier than the weight rating of the hitch components. Never exceed the weight rating of the hitch components. Doing so can cause serious personal injury, death, or property damage.**

- **Never modify the vehicle's brake or exhaust systems or its body structure/frame when installing a hitch. Modifying the exhaust system structure on a vehicle could result in improper operation not covered by the vehicle's warranty. It may also lead to carbon monoxide leaking into the passenger compartment. Altering the brake system can adversely affect vehicle handling, braking and performance and could increase the likelihood of an accident or personal injury or death.**
- **Installing an aftermarket hitch may affect the rear crash performance of your vehicle. Changing the crash performance of a vehicle could lead to more severe vehicle damage, personal injury or death in a crash. Be sure that the hitch does not interfere in anyway with the vehicle's impact-absorbing bumper.**
- **Never attach a hitch or towing device to the vehicle bumper. This may affect operation of the impact-absorbing bumper. Use only permanent-type hitch properly attached to the vehicle to help avoid personal injury or property damage.**
- **Regularly check to see that all hitch-mounting bolts are securely fastened to ensure the hitch will not come loose and remains properly attached to the vehicle to help avoid property damage, personal injury or death.**

⚠ CAUTION

- **For receiver-type hitches using a ball mount, remove the ball mount when not towing or protect it with a special cover, this will help protect it from damage, and prevent rust from forming on it.**
- **The hitch must be securely attached to the frame or underbody, according to the manufacturer's instructions. Never attach a hitch or towing device to the vehicle axle housing. This may damage the housing, wheel bearings, wheels, or tires.**

Hitch ball

Choose a hitch ball of the proper size and weight rating for your trailer:

- The required hitch ball size is stamped on most trailer couplers. Most hitch balls also have the size printed on top of the ball.
- Choose the proper class hitch ball based on the trailer weight.
- The diameter of the threaded shank of the hitch ball must be matched to the ball mount hole diameter. The hitch ball shank should be no more than 1/16" smaller than the hole in the ball mount.
- The threaded shank of the hitch ball must be long enough to be properly secured to the ball mount. There should be at least 2 threads showing beyond the lock washer and nut.

Ball mount

The hitch ball is attached to the ball mount and the ball mount is inserted into the hitch receiver. Choose a proper class ball mount based on the trailer weight. Additionally, the ball mount should be chosen to keep the trailer tongue level with the ground.

Weight carrying hitches

A weight carrying or "dead weight" ball mount is one that is designed to carry the whole amount of tongue weight and gross weight directly on the ball mount and on the receiver.

Weight distribution hitch

This type of hitch is also called a "load-leveling" or "equalizing" hitch. A set of bars attach to the ball mount and to the trailer to distribute the tongue weight (hitch weight) of your trailer. Many vehicles cannot carry the

full tongue weight of a given trailer, and need some of the tongue weight transferred through the frame and pushing down on the front wheels. This gives stability to the tow vehicle.

A weight-distributing hitch system (Class IV) is recommended if you plan to tow trailers with a maximum weight over 5,000 lbs (2,267 kg). Check with the trailer and towing equipment manufacturers to determine if they recommend the use of a weight-distributing hitch system.

NOTE:
A weight-distributing hitch system may affect the operation of trailer surge brakes. If you are considering use of a weight-distributing hitch system with a surge brake-equipped trailer, check with the surge brake, hitch or trailer manufacturer to determine if and how this can be done.

Follow the instructions provided by the manufacturer for installing and using the weight-distributing hitch system.

General set-up instructions are as follows:

1. Park unloaded vehicle on a level surface. With the ignition switch in the ON position and the doors closed, allow the vehicle to stand for several minutes so that it can level.
2. Measure the height of a reference point on the front and rear bumpers at the center of the vehicle.
3. Attach the trailer to the vehicle and adjust the hitch equalizers so that the front bumper height is within 0 - .5 inches (0 - 13 mm) of the reference height measured in step 2. The rear bumper should be no higher than the reference height measured in step 2.

WARNING

Properly adjust the weight distributing hitch so the rear of the bumper is no higher than the measured reference height when the trailer is attached. If the rear bumper is higher than the measured reference height when loaded, the vehicle may handle unpredictably which could cause a loss of vehicle control and cause serious personal injury or property damage.

Sway control device

Sudden maneuvers, wind gusts and buffeting caused by other vehicles can affect trailer handling. Sway control devices may be used to help control these affects. If you choose to use one, contact a reputable trailer hitch supplier to make sure the sway control device will work with the vehicle, hitch, trailer and the trailer's brake system. Follow the instructions provided by the manufacturer for installing and using the sway control device.

Breakaway switch

On a trailer with electric brakes, a breakaway switch can automatically activate the trailer brake system if the trailer becomes separated from the tow vehicle. Should the trailer become detached, a breakaway switch may help prevent the trailer from wandering into another lane.

WARNING

A breakaway switch relies on the power of a trailer battery, so make sure to maintain the battery's charge. Never use the breakaway switch to "park" the trailer on a grade. The battery would eventually discharge and release the brake, allowing the trailer to roll, which may cause property damage, serious injury or death. Be sure to leave enough slack in the tether on the breakaway switch to turn corners without binding. If you do not, the electric trailer brakes will lock-up and not release. See your trailer manufacturer for proper installation of a breakaway switch that is compatible with your trailer braking system.

Class I hitch

Class I trailer hitch equipment (receiver, ball mount and hitch ball) can be used to tow trailers of a maximum weight of 2,000 lb (907 kg).

Class II hitch

Class II trailer hitch equipment (receiver, ball

mount and hitch ball) can be used to tow trailers of a maximum weight of 3,500 lb (1,588 kg).

Class III hitch

Class III trailer hitch equipment (receiver, ball mount and hitch ball) can be used to tow trailers of a maximum weight of 5,000 lb (2,267 kg).

Class IV hitch

Class IV trailer hitch equipment (receiver, ball mount and hitch ball) can be used to tow trailers of a maximum weight of 10,000 lb (4,545 kg). A weight distributing hitch should be used to tow trailers that weigh over 5,000 lb (2,267 kg).

Your vehicle may be equipped with Class IV trailer hitch equipment that has a 10,000 lb (4,545 kg) maximum weight rating, but your vehicle is only capable of towing the maximum trailer weights shown in the "Towing Load/Specification" list earlier in this section.

⚠ CAUTION

- **Do not use axle-mounted hitches. When a trailer hitch is positioned too low, it can result in an uneven distribution of weight between the front and rear axles of the towing vehicle. This uneven weight distribution places excessive stress on the rear axle, potentially causing damage or premature wear and may result in loss of control or an accident.**
- **Do not modify the vehicle exhaust system, brake system, etc. to install a trailer hitch. Doing so could adversely affect the vehicle's performance and result in serious injury or death.**
- **Do not attach any additional hitches to your vehicle because a hitch is already mounted to your vehicle frame.**
- **To reduce the possibility of additional damage if your vehicle is struck from the rear, where practical, remove the ball mount from the receiver when not in use.**
- **Regularly check that all trailer hitch mounting bolts are securely mounted. Loose connections can cause the trailer to wobble, potentially resulting in an accident and causing serious injury or death.**

Tire pressures

- When towing a trailer, inflate the vehicle tires to the recommended cold tire pressure indicated on the Tire and Loading Information label.
- Trailer tire condition, size, load rating and proper inflation pressure should be in accordance with the trailer and tire manufacturers' specifications.

Safety chains

Always use a suitable chain between your vehicle and the trailer. The safety chains should be crossed and should be attached to the hitch, not to the vehicle bumper or axle. Be sure to leave enough slack in the chains to permit turning corners.

⚠ WARNING

The use of S-hooks is illegal in many states. Do not use S-hooks for attaching the safety chains as they may become unhooked while towing. If the S-hook unhooks, the safety chains/cables will become detached, and if the tow hitch breaks or becomes disengaged, it will allow the trailer to completely break away causing property damage and possibly personal injury or death.

⚠ CAUTION

To avoid damage to the bumper and chains/cables when making a sharp turn, do not attach the chains/cables too close to the coupler. Consult your trailer manufacturer for the proper location of the chain/cable attachment to the trailer.

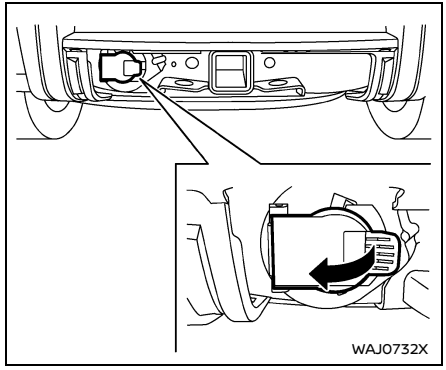

Trailer lights

Your vehicle is equipped with a towing package, which also includes the 7-pin trailer harness connector located under the trailer hitch cover on the rear bumper.

⚠ CAUTION

- **When splicing into the vehicle electrical system, a commercially available power-type module/converter must be used to provide power for all trailer lighting. This unit uses the vehicle battery as a direct power source for all trailer lights while using the vehicle tail light, stoplight and turn signal circuits as a signal source. The module/converter must draw no more than 15 milliamps from the stop and tail lamp circuits. Using a module/converter that exceeds these power requirements may damage the vehicle's electrical system. See a reputable trailer retailer to obtain the proper equipment and to have it installed.**
- **Do not connect electrical devices that draw more than 40 amps to the vehicle. The fusible link may melt.**

Improperly installed or poor-quality trailer harness wiring may adversely affect your vehicle's electrical system. Only use a NISSAN approved wiring harness, or equivalent, and consult your dealer or a professional supplier of towing equipment to obtain the proper equipment and to have it installed.

Trailer lights should comply with federal and/or local regulations. For assistance in hooking up trailer lights, contact a NISSAN

dealer or reputable trailer retailer.

Trailer brakes

When towing a trailer load of 3,500 lbs. (1,587 kg) or more, trailers with a brake system MUST be used. However, most states require a separate braking system on trailers with a loaded weight above a specific amount. Make sure the trailer meets the local regulations and the regulations where you plan to tow.

Several types of braking systems are available.

Surge Brakes - The surge brake actuator is mounted on the trailer tongue with a hydraulic line running to each trailer wheel. Surge brakes are activated by the trailer pushing against the hitch ball when the tow vehicle is braking. Hydraulic surge brakes are common on rental trailers and some boat trailers. In this type of system, there is no hydraulic or electric connection for brake operation between the tow vehicle and the trailer.

Electric Trailer Brakes - Electric braking systems are activated by an electronic signal sent from a trailer brake controller (special brake sensing module) (if so equipped). For additional information, see "Electric trailer brake controller (if so equipped)" (P.549).

Have a professional supplier of towing equipment make sure the trailer brakes are properly installed and demonstrate proper brake function testing.

⚠ WARNING

Never connect a trailer brake system directly to the vehicle brake system. It is required by law that a breakaway kit be installed. If a trailer were to uncouple from the tow vehicle the breakaway switch pin would be pulled and activate your trailer brakes. Failure to use a breakaway switch could result in an accident, causing serious injury or death if a trailer were to become uncoupled from the tow vehicle.

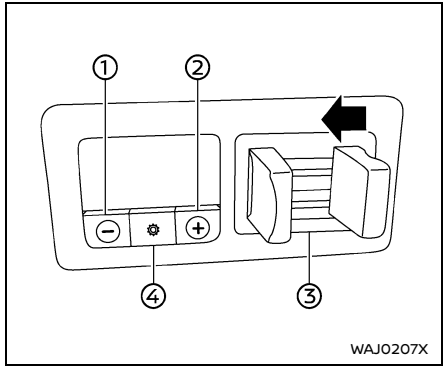

① Gain –
② Gain +
③ Manual control lever
④ Boost

Trailer Brake Controller Unit (TBCU) (if so equipped)

The Trailer Brake Controller Unit (TBCU), located on the instrument panel, is a device that assists the vehicle in having effective and smooth braking while towing a trailer.

Operating modes:

- **Automatic mode:**
  This is the normal operation of the TBCU depending on the gain and boost settings adjusted by the customer. This

mode will activate when vehicle brake pedal is pressed.

- **Manual mode:**
  This mode is initiated by adjusting the manual control lever from resting position. This mode will provide output power to trailer brakes without applying the vehicle brake pedal.

To determine the output operation of the system:

- **Gain + and Gain – :**
  Used to increase or decrease the braking force supplied to the trailer brakes. To adjust the gain, press Gain + or Gain - to the desired point (0-10). For example: gain setting 6.0 is a typical starting point for heavy loads.
- **Boost:**
  Used to adjust the feel of the automatic brake event that occurs when the vehicle brake pedal is applied. To set up boost, press Boost button once to display for current boost setting (display for 3 seconds). Keep pressing to increase boost level until the desired level (OFF, 1, 2 or 3) is achieved.
- **Manual Control Lever:**
  Provides brake output power to trailer brakes without applying the vehicle brake pedal. The amount of brake output supplied corresponds to the amount of pinch pressure applied to the manual control lever.



Prodigy® P2 initial screen at start up (15 seconds*)



Power to Prodigy® P2 with trailer connected and boost feature not engaged



Power to Prodigy® P2 with trailer connected and boost feature not engaged



Power to Prodigy® P2, trailer not connected



Boost off



Boost level 1



Boost level 2



Boost level 3

Gain feature is adjustable from  - to  by increments of 

***If sustained for longer, check trailer connections or visit a dealer for service.**

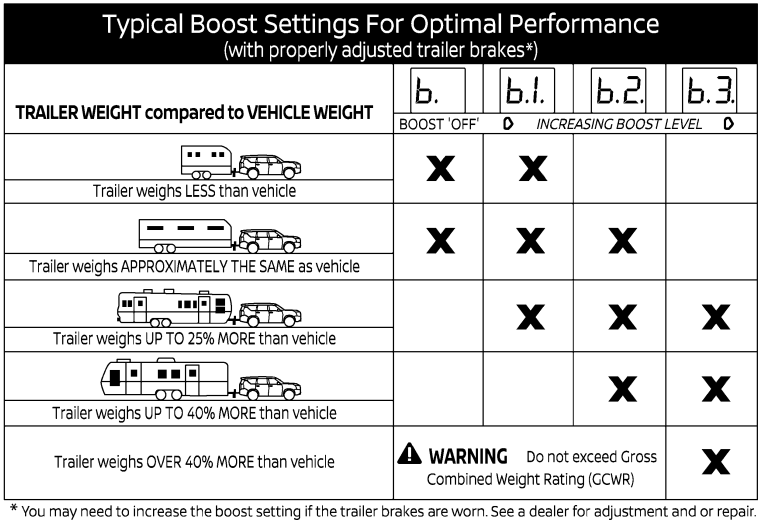

Typical Boost Settings For Optimal Performance
(with properly adjusted trailer brakes*)

TRAILER WEIGHT compared to VEHICLE WEIGHT	b. BOOST 'OFF'	b.1.	b.2.	b.3. INCREASING BOOST LEVEL
Trailer weighs LESS than vehicle	X	X		
Trailer weighs APPROXIMATELY THE SAME as vehicle	X	X	X	
Trailer weighs UP TO 25% MORE than vehicle		X	X	X
Trailer weighs UP TO 40% MORE than vehicle			X	X
Trailer weighs OVER 40% MORE than vehicle	⚠ WARNING Do not exceed Gross Combined Weight Rating (GCWR)			X

* You may need to increase the boost setting if the trailer brakes are worn. See a dealer for adjustment and or repair.

NORMAL-WAJA0029X

This graphic shows the suggested boost levels for different trailer sizes relative to the vehicle size.

⚠ WARNING

Do not exceed Gross Combined Weight Rating (GCWR). See "Towing load/specification" (P.541).

Electric trailer brake controller (if so equipped)

Trailers equipped with electric brakes may require the installation of an aftermarket trailer brake controller.

Your vehicle is equipped with a connector that is specifically designed to be used when installing an aftermarket brake controller.

To install the aftermarket trailer brake controller, perform the following procedure:

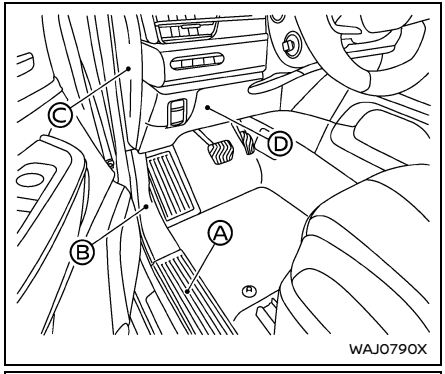

WAJ0790X

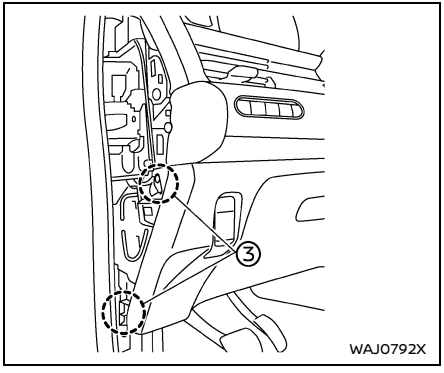

WAJ0792X

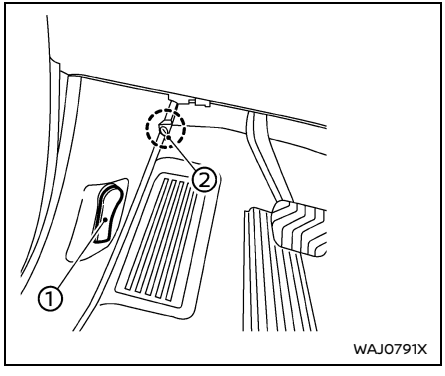

WAJ0791X

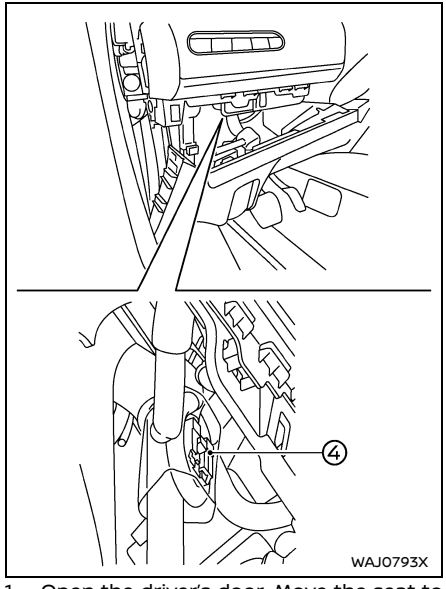

WAJ0793X

1. Open the driver's door. Move the seat to the rearmost position.
2. Remove the kicking plate Ⓐ.
3. Remove the dash side trim Ⓑ.
   - To prevent damage to the dash side trim Ⓑ, wrap the tip of the screwdriver and clip remover with tape.

- Remove the interior hood release handle ① with a flat-head screwdriver and clip remover.
- Remove the dash side trim clip ② with clip remover.
- Remove the dash side trim Ⓑ.

4. Remove the instrument panel side finisher (driver's side) Ⓒ.
5. Remove the lower portion of the instrument panel (driver's side) Ⓓ.
   - Remove the screws ③ with the screwdriver.
   - Remove the lower portion of the instrument panel (driver's side) Ⓓ.
6. Locate the jumper harness connector ④ inside the lower portion of the instrument panel. The connector is taped to the wiring harness as indicated.

   If you have trouble locating the wiring harness, it is recommended that you visit a NISSAN dealer for assistance.

   Wire color designation for electric trailer brake controller jumper harness.

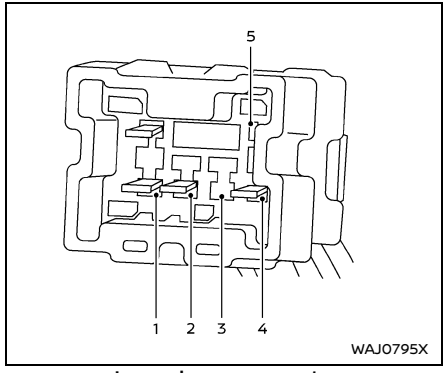

Jumper harness connector

PIN/WIRE COLOR:

1-RED

Fused trailer brake controller battery feed (B+)

2-GREEN

Brake controller illumination

3-GRAY

Trailer brake controller switched output

4-BLACK/YELLOW

Brake controller ground (-)

5-WHITE

Vehicle stop lamp switch to trailer brake controller

7. Peel off the tape and connect the aftermarket jumper harness to the connector.
8. Release the parking brake.
9. Install the aftermarket electric trailer brake controller according to the manufacturer's instructions.

Pre-towing tips

⚠ WARNING

- **Excessive tongue/king pin load can push down the rear of the tow vehicle, lifting the front wheels to a point where traction, steering response, and braking may be seriously reduced. Too little tongue/king pin load can cause instability, which may lead to swaying, "tail wagging" or jackknifing. Do not drive the vehicle if it has an abnormal nose-up or nose-down condition as it could result in serious injury or death.**
- **The trailer load should be balanced equally from side-to-side. Unequal side-to-side loading can negatively affect handling and braking. All cargo should be firmly secured to prevent shifting. If the load should shift abruptly during braking or cornering, it could quickly affect the handling and stability of your vehicle and cause a very unsafe situation, loss of control or serious accident, personal injury or death.**

- **A trailer can block your rear vision when you are using only the standard rear view and outside mirrors. Be careful when changing lanes or turning. Using only these mirrors could cause an accident as they were not designed for towing.**

- Keep the cargo load as low as possible in the trailer to keep the trailer center of gravity low.
- Load the trailer so approximately 60% of the trailer load is in the front half and 40% is in the back half. Also make sure the load is balanced side to side. Incorrectly loaded trailers tend to sway or swing from side to side, upsetting vehicle handling.
- Check your hitch, trailer tire pressure, vehicle tire pressure, trailer light operation, and trailer wheel lug nuts every time you attach a trailer to the vehicle.
- Be certain your rearview mirrors conform to all federal, state or local regulations. If not, install any mirrors required for towing before driving the vehicle.
- Determine the overall height of the vehicle and trailer so the required clearance is known.

Trailer towing tips

In order to gain skill and an understanding of the vehicle's behavior, you should practice turning, stopping and backing up in an area which is free from traffic. Steering stability, and braking performance will be somewhat different than under normal driving conditions.

- Always secure items in the trailer to prevent load shift while driving.
- Lock the trailer hitch coupler with a pin or lock to prevent the coupler from inadvertently becoming unlatched.
- Avoid abrupt starts, acceleration or stops.
- Avoid sharp turns or lane changes.
- Some states or provinces have specific speed limits for vehicles that are towing trailers. Remember to reduce your speed in adverse road conditions or weather. When towing a trailer, braking distances increase while handling agility decreases. Always leave yourself an extra margin of distance to react and respond to emergencies.
- When backing up, hold the bottom of the steering wheel with one hand. Move your hand in the direction in which you want the trailer to go. Make small corrections and back up slowly. If possible, have someone guide you when you are backing up.

Always block the wheels on both vehicle and trailer when parking. Parking on a slope is not recommended; however, if you must do so:

⚠ CAUTION

To prevent damage to the transmission, do not shift the transmission to the P (Park) position before blocking the wheels and applying the parking brake.

1. Apply and hold the brake pedal.
2. Have someone place blocks on the downhill side of the vehicle and trailer wheels.
3. After the wheel blocks are in place, slowly release the brake pedal until the blocks absorb the vehicle load.
4. Apply the parking brake.
5. Shift the transmission into P (Park).
6. Turn off the engine.

To drive away:

1. Apply and hold the brake pedal.
2. Start the engine.
3. Shift the transmission into gear.
4. Release the parking brake.
5. Drive slowly until the vehicle and trailer are clear from the blocks.
6. Apply and hold the brake pedal.
7. Have someone retrieve and store the blocks.

⚠ WARNING

- **While going downhill, the weight of the trailer pushing on the tow vehicle may affect overall handling characteristics, which could result in an accident, property damage, serious injury or death if vehicle control is not adequately maintained. When descending a hill, reduce your speed and shift to a lower gear. Avoid long or repeated use of the brakes, as this reduces their effectiveness and could cause overheating. Shifting to a lower gear instead provides "engine braking" and reduces the need to brake as frequently.**
- **Applying the brakes abruptly or with too much force can cause a sudden shift in weight which can cause the trailer to skid or jackknife at its point of attachment with the vehicle. This, in turn, can lead to a loss of control of the tow vehicle, resulting in an accident, property damage, personal injury or death. If equipped with an electric trailer brake controller follow the recommended operational instructions.**
- **Never attempt to pass on hills or when going around curves. This could possibly result in loss of vehicle control and cause an accident, property damage, serious injury or death.**
- **Entering a sharp corner too quickly or abruptly can cause the trailer to sway whereby the trailer can pull the tow vehicle off of the road. Doing so could cause a loss of vehicle control and result in an accident, property damage, serious injury or death.**
- **When towing a 5th wheel or gooseneck trailer, do not make sharp turns while driving or backing as the trailer may contact the vehicle and cause damage to both the trailer and the vehicle, or result in an accident leading to property damage, serious injury or death.**

- If the engine coolant temperature rises to a high temperature, see "If your vehicle overheats" (P.453).
- Trailer towing requires more fuel than normal circumstances.
- Avoid towing a trailer for your vehicle's first 500 miles (800 km) to prevent damage to the engine, transmission, axle, or other parts.
- Have your vehicle serviced more often than at intervals specified in the recommended maintenance schedule shown in the "9. Maintenance and schedules" section.
- When making a turn, your trailer wheels will be closer to the inside of the turn than your vehicle wheels. To compensate for this, use a larger than normal turning radius when towing a trailer.
- Crosswinds and rough roads will adversely affect vehicle/trailer handling, possibly causing vehicle sway. When being passed by larger vehicles, be prepared for possible changes in crosswinds that could affect vehicle handling.

Do the following if the trailer begins to sway:

1. Take your foot off the accelerator pedal to allow the vehicle to coast and steer as straight ahead as the road conditions allow. This combination will help stabilize the vehicle.
   - Do not correct trailer sway by steering or applying the brakes.
2. When the trailer sway stops, gently apply the brakes and pull to the side of the road in a safe area.
3. Try to rearrange the trailer load so it is balanced as described earlier in this section.

- Be careful when passing other vehicles. Passing while towing a trailer requires considerably more distance than normal passing. Remember the length of the trailer must also pass the other vehicle before you can safely change lanes.
- Use the TOW mode (if so equipped) or downshift the transmission to a lower

gear for engine braking when driving down steep or long hills. This will help slow the vehicle without applying the brakes.
- Avoid holding the brake pedal down too long or too frequently. This could cause the brakes to overheat, resulting in reduced braking efficiency.
- NISSAN recommends that the cruise control not be used while towing a trailer.
- While towing a trailer, do not use the following systems (if so equipped):
  - Lane Departure Warning (LDW) system
  - Intelligent Lane Intervention (I-LI) system
  - Intelligent Blind Spot Intervention (I-BSI) system
  - Rear Cross Traffic Alert (RCTA) system
  - ProPILOT Assist systems (Intelligent Cruise Control (ICC), ProPILOT Assist and Steering Assist)
  - Automatic Emergency Braking (AEB) with Pedestrian Detection system
  - Intelligent Forward Collision Warning (I-FCW)
  - Rear Automatic Braking (RAB)
- Check your hitch, trailer wiring harness connections, and trailer wheel lug nuts after 50 miles (80 km) of travel and at every break.
- When launching a boat, do not allow the water level to go over the exhaust tail pipe or rear bumper.
- Make sure you disconnect the trailer lights before backing the trailer into the water or the trailer lights may burn out.

When towing a trailer, the transmission fluid should be changed more frequently. For additional information, see the "9. Maintenance and schedules" section.

TOW mode (if so equipped)

Using TOW mode is recommended when pulling a heavy trailer or hauling a heavy load. See "Drive Mode Selector (if so equipped)" (P.312) to activate the TOW mode. TOW mode is automatically cancelled when the ignition switch is placed in the OFF position.

TOW mode includes the following features:
- Grade logic — Adjusts transmission shifts when pulling a trailer or hauling a load up a grade.
- Downhill Speed Control (DSC) — automatically downshifts when driving down a grade with a trailer or heavy load to help control vehicle speed.

Driving the vehicle in the TOW mode with no trailer/load or light trailer/light load will not cause any damage. However, fuel economy may be reduced and the transmission/engine driving characteristics may feel unusual.

When towing a trailer, the transmission fluid should be changed more frequently. For additional information, see "9. Maintenance and schedules" section.

Trailer Sway Control

To minimize trailer sway, your vehicle may apply braking to individual wheels based on input from your vehicle sensors and vehicle speed. Trailer Sway Control is a function of the Vehicle Dynamic Control (VDC) system and is active when the VDC function is enabled.

⚠ CAUTION

If the VDC OFF switch is on (meaning VDC system OFF), the Trailer Sway Control is also disabled.

When Trailer Sway Control is in operation, the VDC warning light blinks. When vehicle control is regained, VDC warning light will turn OFF.

For additional information about the VDC system, see "Vehicle Dynamic Control (VDC) system" (P.422).

If Trailer Sway Control activates:

1. Take your foot off the accelerator pedal to allow the vehicle to coast and steer as straight ahead as the road conditions allow. This combination will help stabilize the vehicle.

⚠ CAUTION

Do not try to correct trailer sway by steering or applying the brakes.

2. When the trailer sway stops, gently apply the brakes and pull to the side of the road in a safe area.
3. Try to rearrange the trailer load so it is balanced.

NOTE:
Trailer Sway Control cannot reduce trailer sway in all situations.

FLAT TOWING

Towing your vehicle with all four wheels on the ground is sometimes called flat towing, dinghy towing or 4 down towing. This method is sometimes used when towing a vehicle behind a recreational vehicle, such as a motor home.

⚠ CAUTION

- **Failure to follow these guidelines can result in severe transmission damage.**
- **Whenever flat towing your vehicle, always tow forward, never backward.**
- **DO NOT tow any automatic transmission vehicle with all four wheels on the ground (flat towing). Doing so WILL DAMAGE internal transmission parts due to lack of transmission lubrication.**
- **DO NOT tow a Four-Wheel Drive (4WD) vehicle with any of the wheels on the ground. Doing so may cause serious and expensive damage to the powertrain.**
- **For emergency towing procedures refer to "Towing recommended by NISSAN" (P.455).**

AUTOMATIC TRANSMISSION

Four-Wheel Drive (4WD) models

Do not tow a 4WD vehicle with any of the wheels on the ground.

Two-Wheel Drive (2WD) models

To tow a vehicle equipped with an automatic transmission, an appropriate vehicle dolly **MUST** be placed under the towed vehicle's drive wheels. **Always** follow the dolly manufacturer's recommendations when using their product.

UNIFORM TIRE QUALITY GRADING

DOT (Department Of Transportation) Quality Grades: All passenger car tires must conform to federal safety requirements in addition to these grades.

Quality grades can be found where applicable on the tire sidewall between tread shoulder and maximum section width. For example:

Treadwear 200 Traction AA Temperature A

Treadwear

The treadwear grade is a comparative rating based on the wear rate of the tire when tested under controlled conditions on a specified government test course. For example, a tire graded 150 would wear one and one-half (1 1/2) times as well on the government course as a tire graded 100. The relative performance of tires depends upon actual conditions of their use, however, and may depart significantly from the norm due to variations in driving habits, service practices and differences in road characteristics and climate.

Traction AA, A, B and C

The traction grades, from highest to lowest, are AA, A, B and C. Those grades represent the tire's ability to stop on wet pavement as measured under controlled conditions on specified government test surfaces of asphalt and concrete. A tire marked C may have poor traction performance.

⚠ WARNING

The traction grade assigned to this tire is based on straight-ahead braking traction tests, and does not include acceleration, cornering, hydroplaning, or peak traction characteristics.

Temperature A, B and C

The temperature grades A (the highest), B, and C, representing the tire's resistance to the generation of heat and its ability to dissipate heat when tested under controlled conditions on a specified indoor laboratory test wheel. Sustained high temperature can cause the material of the tire to degenerate and reduce tire life, and excessive temperature can lead to sudden tire failure. The grade C corresponds to a level of performance which all passenger car tires must meet under the Federal Motor Vehicle Safety Standard No. 109. Grades B and A represent higher levels of performance on the laboratory test wheel than the minimum required by law.

⚠ WARNING

The temperature grade for this tire is established for a tire that is properly inflated and not overloaded. Excessive speed, under-inflation, or excessive loading, either separately or in combination, can cause heat build-up and possible tire failure.

REPORTING SAFETY DEFECTS

For USA

If you believe that your vehicle has a defect which could cause a crash or could cause injury or death, you should immediately inform the National Highway Traffic Safety Administration (NHTSA) in addition to notifying NISSAN.

If NHTSA receives similar complaints, it may open an investigation, and if it finds that a safety defect exists in a group of vehicles, it may order a recall and remedy campaign. However, NHTSA cannot become involved in individual problems between you, your dealer, or NISSAN.

To contact NHTSA, you may call the Vehicle Safety Hotline toll-free at 1-888-327-4236 (TTY: 1-888-275-9171); go to http://www.safercar.gov; or write to: Administrator, NHTSA, 1200 New Jersey Avenue, SE Washington, D.C. 20590. You can also obtain other information about motor vehicle safety from http://www.safercar.gov.

You may notify NISSAN by contacting our Consumer Affairs Department, toll-free, at 1-800-NISSAN-1.

For Canada

If you believe that your vehicle has a defect which could cause a crash or could cause injury or death, you should immediately inform Transport Canada in addition to notifying NISSAN.

If Transport Canada receives complaints, it may open an investigation, and if it finds that a safety defect exists in a group of vehicles, it may request that NISSAN conduct a recall campaign. However, Transport Canada cannot become involved in individual problems between you, your dealer, or NISSAN.

You may contact Transport Canada's Defect Investigations and Recalls Division toll free at 1-800-333-0510. You may also report safety defects online at:

http://www.tc.gc.ca/eng/motorvehiclesafety/menu.htm (English speakers) or http://www.tc.gc.ca/fra/securiteautomobile/menu.htm (French speakers) Or contact Transport Canada by mail at: Transport Canada Motor Vehicle Safety Investigations Laboratory 80 Noel Street Gatineau, QC J8Z0A1

Additional information concerning motor vehicle safety may be obtained from Transport Canada's Road Safety Information Centre at 1-800-333-0371 or online at www.tc.gc.ca/roadsafety (English speakers) or www.tc.gc.ca/securiteroutiere (French speakers).

To notify NISSAN of any safety concerns please contact our Consumer Information Centre toll free at 1-800-387-0122.

READINESS FOR INSPECTION/MAINTENANCE (I/M) TEST

⚠ WARNING

A vehicle equipped with Four-Wheel Drive (4WD) should never be tested using a two wheel dynamometer (such as the dynamometers used by some states for emissions testing), or similar equipment. Make sure you inform test facility personnel that your vehicle is equipped with 4WD before it is placed on a dynamometer. Using the wrong test equipment may result in transmission damage or unexpected vehicle movement which could result in serious vehicle damage or personal injury.

Due to legal requirements in some states and Canadian Provinces, your vehicle may be required to be in what is called the "ready condition" for an Inspection/Maintenance (I/M) test of the emission control system.

The vehicle is set to the "ready condition" when it is driven through certain driving patterns. Usually, the "ready condition" can be obtained by ordinary usage of the vehicle.

If a powertrain system component is repaired or the battery is disconnected, the vehicle may be reset to a "not ready condition".

Before taking the I/M test, check the vehicle's inspection/maintenance test readiness condition. Place the ignition switch in the ON position without starting the engine. If the Malfunction Indicator Light (MIL) comes on steady for 20 seconds and then blinks for 10 seconds, the I/M test condition is "not ready". If the MIL does not blink after 20 seconds, the I/M test condition is "ready".

It is recommended you visit a NISSAN dealer to set "ready condition" or to prepare the vehicle for testing.

EMISSION CONTROL SYSTEM WARRANTY

Your vehicle is covered by the following emission warranties.

For USA:

1. Emission Defects Warranty
2. Emissions Performance Warranty

Details of this warranty may be found with the other vehicle warranties in your Electronic Warranty Information Booklet which can be accessed at https://www.nissanusa.com/owners/manuals-guides.html. A printed copy of the Warranty Information Booklet may be obtained by writing to:

- Nissan North America, Inc.
  Consumer Affairs Department
  P.O. Box 685003
  Franklin, TN 37068-5003
  1–800–NISSAN-1

For Canada:

Emission Control System Warranty

Details of this warranty may be found with other vehicle warranties in your Warranty Information Booklet. The Warranty Information Booklet can be found at https://www.nissan.ca/owners/warranties-and-coverage/limited-warranty.html.

EVENT DATA RECORDERS (EDR)

BASIC INFORMATION

This vehicle is equipped with an Event Data Recorder (EDR). The main purpose of an EDR is to record, in certain crash or near crash-like situations, such as an air bag deployment or hitting a road obstacle, data that will assist in understanding how a vehicle's systems performed. The EDR is designed to record data related to vehicle dynamics and safety systems for a short period of time, typically 30 seconds or less. The EDR in this vehicle is designed to record such data as:

- How various systems in your vehicle were operating;
- Whether or not the driver and passenger safety belts were buckled/fastened;
- How far (if at all) the driver was depressing the accelerator and/or brake pedal; and,
- How fast the vehicle was traveling.
- Sounds are not recorded.

These data can help provide a better understanding of the circumstances in which crashes and injuries occur.

NOTE: EDR data are recorded by your vehicle only if a nontrivial crash situation occurs; no data are recorded by the EDR under normal driving conditions and no personal data (e.g. name, gender, age and crash location) are recorded. However, other parties, such as law enforcement, could combine the EDR data with the type of personally identifying data routinely acquired during a crash investigation.

To read data recorded by an EDR, special equipment is required and access to the vehicle or the EDR is needed. In addition to the vehicle manufacturer and NISSAN dealer, other parties, such as law enforcement, that have the special equipment, can read the information if they have access to the vehicle or the EDR. EDR data will only be accessed with the consent of the vehicle owner or lessee or as otherwise required or permitted by law.

ADDITIONAL DATA RECORDING

If your vehicle is equipped with the optional ProPILOT Assist, it will also be equipped with supplemental data recording function intended to assist in understanding how ProPILOT Assist performs in certain nontrivial crash or near-crash scenarios. Specifically, supplemental recording is designed to capture the following:

For ProPILOT Assist

- Driver operational status of the accelerator, brakes, steering, etc.
- Detection status of a vehicle ahead and lane markers
- Vehicle information including distance to vehicle ahead and lateral position
- Information on the operation of the ProPILOT Assist and other crash avoidance features
- ProPILOT Assist malfunction diagnosis information
- External images from the multi-sensing front camera (Available only when the SRS air bag or AEB with Pedestrian Detection system is activated)

For ProPILOT Assist 2.1

- Driver operational status of the accelerator, brakes, steering, etc.
- Detection status of direction of the driver's face and opening/closing of the driver's eyelids
- Information on the operation of the ProPILOT Assist 2.1 and other crash avoidance features
- Detection status of a vehicle ahead and lateral position, lane markers and road structure
- Vehicle information including the vehicle speed, the vehicle position (from GNSS), etc.
- External images from the multi-sensing front camera
  (Available only when the SRS air bag or AEB with Pedestrian Detection system is activated)

The ProPILOT Assist does not record conversations, sounds or images of the inside of the vehicle.

To read this supplemental data, special equipment is required and access to the vehicle or the recording unit is needed. This supplemental data will only be accessed with the consent of the vehicle owner or lessee or as otherwise required or permitted by law. If downloaded, NISSAN and third parties entrusted by NISSAN may use the data recorded for the purpose of improving NISSAN's vehicle safety performance.

NISSAN and third parties entrusted by NISSAN will not disclose/provide the recorded data to a third party except:

- With the consent of the vehicle owner or with the consent of the lessee
- In response to an official request from law enforcement, court order, governmental agency, or other legally enforceable request
- For research purposes after the data is modified such that it is no longer tied to a specific vehicle or vehicle owner (anonymized)

OWNER'S MANUAL/SERVICE MANUAL ORDER INFORMATION

Genuine NISSAN Service Manuals for this model year and prior can be purchased. A genuine NISSAN Service Manual is the best source of service and repair information for your vehicle. This manual is the same one used by the factory trained technicians working at a NISSAN dealer. Genuine NISSAN Owner's Manuals can also be purchased.

In the USA:

For current pricing and availability of genuine **NISSAN Service Manuals** contact:

www.nissan-techinfo.com

For current pricing and availability of genuine **NISSAN Owner's Manuals** visit:

https://www.nissanusa.com

In Canada:

To purchase a copy of a genuine NISSAN Service Manual or Owner's Manual for this model year and prior please contact a NISSAN dealer. For the phone number and location of a NISSAN dealer in your area call the NISSAN Information Center at 1-800-387-0122 and a bilingual NISSAN representative will assist you.

11 Index

Number

3D view 251

A

ABS (Anti-lock Braking System) 420
Active sound enhancement 439
Advanced air bag system 74
Air bag system
- Advanced air bag system 74
- Driver and front passenger supplemental knee air bag system 81
- Front central seat-mounted side-impact supplemental air bag system 82
- Front passenger air bag and status light 76
- Front-seat mounted side-impact supplemental air bag system 82
- Roof-mounted curtain side-impact and rollover supplemental air bag system 82

Air bag warning labels 88
Air bag warning light 88, 105
Air cleaner housing filter 480
Air conditioner
- Air conditioner filter 274
- Air conditioner service 274
- Air conditioner specification label 532
- Air conditioning system refrigerant and oil recommendations 274, 527
- Automatic air conditioner 266
- Automatic climate control 265
- In-cabin microfilter 274

Air suspension system 413
Alarm, How to stop alarm (see vehicle security system) 150
Alcohol, drugs and driving 295
Alert
- Rear Door Alert 167

Antenna 283
Anti-lock Braking System (ABS) 420
Anti-lock Braking System (ABS) warning light 105
Appearance care
- Exterior appearance care 460
- Interior appearance care 463

Approach unlock function 203
Armrest 25
Assist grips 222
Attention to the road 376
Audible reminders 110
AUTO mode 313
Automatic
- Automatic air conditioner 266
- Automatic Transmission Fluid (ATF) 474
- Climate control 265
- Door locks 198
- Driving with Automatic Transmission (AT) 302

Automatic brake hold 309
Automatic Emergency Braking (AEB) system OFF warning light 106
Automatic Emergency Braking (AEB) with Pedestrian Detection system 381
Automatic Transmission (AT) position indicator 101
Average fuel consumption 136
Average speed 136
Avoiding collision and rollover 293

B

Battery
- Battery 476
- Battery replacement, Intelligent Key 486
- Battery saver system 159
- Variable voltage control system 478

Before starting the engine 300
Belts (See drive belts) 478
Biometric cooling 272
Blind Spot Warning (BSW) 325
Booster seats 65
Brake
- Anti-lock Braking System (ABS) 420
- Brake fluid 474
- Brake system 419
- Electronic parking brake system warning light 106
- Parking brake 307
- Secondary Collision Mitigation Braking (SCMB) 421
- Warning light 102

Break-in schedule 405
Brightness control
- Instrument panel 101

Bulb check/instrument panel 102
Bulb replacement 489

C

Capacities and recommended fluids/lubricants 523
Car phone or CB radio 284
Card holder 179
Cargo floor box 180

Cargo light 188
Catalytic converter, Three way catalyst 289
Center ventilators 264
Charger
Magnetic wireless charger 171
Chassis control 425
Child restraints
Booster seats 65
Child restraints 48
LATCH system 50
Precautions on child restraints 49
Top tether strap 54
Child safety 46
Child safety rear door lock 199
Chimes
Seat belt warning light and chime 104
Chimes, Audible reminders 110
Circuit breaker, Fusible link 483
Cleaning exterior and interior 460, 463
Climate control
Automatic air conditioner 266
Automatic climate control 265
Clock 142
Coat hook 179
Cockpit 94
Cold weather driving 438
Connection to roadside assistance 442
Console box 178
Conventional (fixed speed) cruise control 366
Coolant
Capacities and recommended fluids/lubricants 523
Changing engine coolant 471
Checking engine coolant level 470
Corrosion protection 465
Cruise control
Conventional (fixed speed) cruise control 366
Cup holders 175

D

Daytime Running Lights (DRL) system 159
Defroster, Rear window and outside mirror defroster 154
Differential lock mode switch 412
Dimensions 528
Display
Head Up Display (HUD) 146
Vehicle information display 111
Drive belts 478
Drive Computer 136
Drive Mode Selector 312
Driver and front passenger supplemental knee air bag 81
Driver Monitor 375
Driving
Cold weather driving 438
Drive Mode Selector 312
Driving with Automatic Transmission (AT) 302
On-pavement and off-road driving 293
Precautions when starting and driving 289
Safety precautions 295
Driving recorder 274

E

ECO mode 313
ECO mode system
ECO Drive Report 101
Economy, Fuel 407
Elapsed time 137
Electric power steering 418
Electric power steering warning light (red) 103
Electric power steering warning light (yellow) 106
Electric shift control system warning light 103
Electric trailer brake controller 549
Emergency Call (SOS) button 173
Emission control information label 531
Emission control system warranty 558
Engine
Before starting the engine 300
Break-in schedule 405
Capacities and recommended fluids/lubricants 523
Changing engine coolant 471
Changing engine oil and filter 472
Checking engine coolant level 470
Checking engine oil level 471
Coolant temperature gauge 99
Emergency engine shut off 298
Engine block heater 439
Engine compartment check locations 469
Engine cooling system 469
Engine oil 471
Engine oil and oil filter recommendation 526
Engine oil viscosity 526
Engine serial number 530
Engine specifications 528
Engine start operation indicator 121
If your vehicle overheats 453
Protection mode 301
Remote engine start 209
Starting the engine 300

Event Data Recorders (EDR) 559
Exhaust gas (carbon monoxide) 289
Explanation of scheduled maintenance items 507
Extended storage switch 486

F

F.M.V.S.S./C.M.V.S.S. certification label 531
Filter
- Air cleaner housing filter 480
- Changing engine oil and filter 472

Flashers (See hazard warning flasher switch) 442
Flat tire 443
Flat towing your vehicle 555
Flexible seating 25
Floor mat cleaning 464
Fluid
- Automatic Transmission Fluid (ATF) 474
- Brake fluid 474
- Capacities and recommended fluids/lubricants 523
- Engine coolant 469
- Engine oil 471
- Window washer fluid 475

Fog light switch 160
Front passenger air bag and status light 76
Front seat
- Front seat adjustment 18

Fuel
- Capacities and recommended fluids/lubricants 523
- Fuel economy 407
- Fuel information 524
- Fuel octane rating 524
- Fuel-filler door 218
- Gauge 100

Fuel Efficient Driving Tips 406
Fuses 482
Fusible links 483

G

Garage door opener
- HomeLink® Universal Transceiver 188

Garage mode system 215
Gauge
- Engine coolant temperature gauge 99
- Fuel gauge 100
- Gauge 96
- Odometer 98
- Speedometer 98
- Tachometer 99

General maintenance 504
Glove box 178

H

Hands On Detection 372
Hazard warning flasher switch 442
Head restraints/headrests 30
Head Up Display (HUD) 146
Headlights
- Bulb replacement 489
- Headlight switch 155

Heated seats 162
Heated steering wheel 161
Heater
- Automatic climate control 265
- Engine block heater 439

High beam assist 157
Hill descent control switch 427
Hill descent control system 426
Hill start assist system 425
HomeLink® Universal Transceiver 188
Hood release 211
Hook
- Coat hook 179
- Luggage hook 180

Horn 161

I

Idling Stop System 432
Ignition switch 297
Ignition switch positions 298
Immobilizer system 150
In-cabin microfilter 274
Indicator
- Lights 105
- Vehicle information display 111

indicator light
- Electronic parking brake warning light 103

Inside mirror 222
Inspection/maintenance (I/M) test 558
Instrument brightness control 101
Instrument panel 95
Intelligent Around View® Monitor 245
Intelligent Auto Headlights 156
Intelligent Blind Spot Intervention (I-BSI) 333
Intelligent Cruise Control (ICC) 362
Intelligent Driver Alertness (I-DA) 398
Intelligent Forward Collision Warning (I-FCW) 392
Intelligent Key system
- Intelligent Key system 199
- Key operating range 201
- Key operation 202

Remote keyless operation 205
Intelligent Lane Intervention (I-LI) 319
Intelligent Rear View Mirror 223
Intelligent Trace Control 425
Interior light replacement 489
Interior light switch 187
Interior lights 186
Invisible Hood View 252
ISOFIX child restraint 50

J

Jump starting 451

K

Key
Ignition switch positions 298
Keyless entry
With Intelligent Key system (See Intelligent Key system) 205
Keys
For Intelligent Key system 199
Keys 195

L

Labels
Air bag warning labels 88
Air conditioner specification label 532
Emission control information label 531
Engine serial number 530
F.M.V.S.S./C.M.V.S.S. certification label 531
Tire and Loading information label 492, 531
Vehicle identification number (VIN) 530
Lane Change Assist 376
Lane Departure Warning (LDW) 319
LATCH system 50
License plate, Installing front license plate 532
Liftgate
Auto closure 216
Liftgate 211
Liftgate release lever 216
Operating power liftgate 212
Light
Air bag warning light 88
Bulb replacement 489
Cargo light 188
Exterior and interior light replacement 489
Fog light switch 160
Headlight switch 155
Headlights bulb replacement 489
Indicator lights 105
Interior lights 186
Map lights 187
Rear personal lights 187
Replacement 489
Vanity mirror lights 188
Warning lights, indicator lights and audible reminders 102
Linking Intelligent Key (air conditioner) 274
Loading information (See vehicle loading information) 533
Lock
Automatic door locks 198
Door locks 196
Power door lock 196
Low tire pressure warning (Tire Pressure Low) 123
Low tire pressure warning light 107
Low tire pressure warning system (See tire pressure monitoring system (TPMS)) 290
Lower console tray 179
Luggage hooks 180

M

Magnetic wireless charger 171
Maintenance
Battery 476
General maintenance 504
Inside the vehicle 505
Maintenance precautions 468
Maintenance requirements 504
Maintenance schedules 508
Outside the vehicle 504
Seat belt maintenance 45
Maintenance schedules 508
Malfunction indicator light (MIL) 108
Map lights 187
Master warning light 104, 109
Mechanical key (Intelligent Key system) 196
Memory seat 233
Meters and gauges
Instrument brightness control 101
Meters and gauges 96
Mirror
Inside mirror 222
Intelligent Rear View Mirror 223
Outside mirrors 230
Vanity mirror 232
Moonroof 184
Moving Object Detection (MOD) 261
MUD/RUT mode 316
My Parking Locations 256

N

Neutral hold mode ... 304
New vehicle break-in ... 405
NISSAN All-Mode 4WD® ... 407
NISSAN Vehicle Immobilizer System ... 150
NissanConnect® Owner's Manual ... 237

O

Odometer ... 98
Off-road recovery ... 294
Oil
- Capacities and recommended fluids/lubricants ... 523
- Changing engine oil and filter ... 472
- Checking engine oil level ... 471
- Engine oil ... 471
- Engine oil viscosity ... 526
- Oil control system ... 118

Other lights ... 109
Outside air temperature ... 142
Outside mirrors ... 230
Overhead console ... 177
Overheat, If your vehicle overheats ... 453
Owner's Manual/Service Manual order information ... 560

P

Panic alarm ... 205
Parking
- Brake break-in ... 419
- Parking brake ... 307
- Parking on hills ... 417

Parking brake
- Electronic parking brake warning light ... 103

Passing Assist ... 378
Phone
- Car phone or CB radio ... 284

Power
- Electric power steering ... 418
- Power door lock ... 196
- Power outlet ... 168
- Power windows ... 182

Power moonroof and sunshade ... 185
Precautions
- Braking precautions ... 419
- Child restraints ... 49
- Driving safety ... 295
- Maintenance ... 468
- On-pavement and off-road driving ... 293
- Seat belt usage ... 35
- Supplemental restraint system ... 68
- When starting and driving ... 289

ProPILOT Assist Systems ... 349
ProPILOT Assist Systems limitations ... 354
Push starting ... 453
Push-button ignition switch ... 297

R

RAB system ... 400
Radio
- Car phone or CB radio ... 284

Rain-sensing auto wiper system ... 152
Rapid air pressure loss ... 294
Readiness for inspection/maintenance (I/M) test ... 558
Rear Automatic Braking (RAB) ... 400
Rear Automatic Braking (RAB) system OFF warning light ... 109
Rear combination lights ... 489
Rear Cross Traffic Alert (RCTA) ... 343
Rear differential lock system ... 412
Rear Door Alert ... 167
Rear door lock, Child safety rear door lock ... 199
Rear personal lights ... 187
Rear ventilators ... 265
Rear window and outside mirror defroster ... 154
Rear window wiper and washer switch ... 153
Rear window wiper blades ... 481
Rear zoom view ... 252
RearView Monitor ... 239
Recorders, Event data ... 559
Registering your vehicle in another country ... 529
Remote engine start ... 209
Remote keyless entry function, For Intelligent Key system ... 205
Reporting safety defects ... 557
ROCK mode ... 315
Rollover ... 293
Roof
- Roof rack ... 181

S

Safety
- Child seat belts ... 46
- Reporting safety defects ... 557
- Towing safety ... 541

SAND mode ... 315
Satellite radio antenna ... 283
Seat adjustment
- Front power seat adjustment ... 18
- Front seats ... 18

Seat belt(s)
Child safety ... 46
Infants ... 47
Injured persons ... 38
Larger children ... 47
Precautions on seat belt usage ... 35
Pregnant women ... 38
Seat belt cleaning ... 465
Seat belt extenders ... 45
Seat belt maintenance ... 45
Seat belt warning light and chime ... 104
Seat belts ... 35
Seat belts with pretensioners ... 83
Small children ... 47
Three-point type ... 38
Seat(s)
Heated seats ... 162
Memory seat ... 233
Seats ... 17
Seats
Resetting the seat positions ... 29
Secondary Collision Mitigation Braking (SCMB) ... 421
Security system (NISSAN Vehicle Immobilizer System), Engine start ... 150
Security system, Vehicle security system ... 149
Servicing climate control ... 274
Setting memory function, memory seat ... 234
Severe use maintenance ... 509
Shifting, Automatic Transmission (AT) ... 302
Side ventilators ... 265
SNOW mode ... 314
Sonar
Front and rear sonar system ... 427
Rear Automatic Braking (RAB) ... 400
SOS button (See Emergency Call (SOS) button) ... 173
Spare tire ... 501, 528
Spark plugs ... 479
Speed Adjust by Route ... 369
Speed Limit Assist ... 368
Speedometer ... 98
SPORT mode ... 314
Standard maintenance ... 509
STANDARD mode ... 313
Starting
Before starting the engine ... 300
Jump starting ... 451
Precautions when starting and driving ... 289
Push starting ... 453
Starting the engine ... 300
Status light, Front passenger air bag ... 76
Steering
Electric power steering ... 418
Heated steering wheel ... 161
Steering wheel ... 220
Steering Assist ... 370
Steering Assist switch ... 164
Steering Assist with HD map data ... 373
Steering wheel ... 220
Storage ... 175
Sun visors ... 221
Supplemental air bag warning labels ... 88
Supplemental air bag warning light ... 88, 105
Supplemental restraint system
Precautions on supplemental restraint system ... 68
Supplemental restraint system ... 68
Switch
4WD shift switch ... 410
Differential lock mode switch ... 412
Drive Mode Selector ... 312
Emergency Call (SOS) button ... 173
Fog light switch ... 160
Hazard warning flasher switch ... 442
Headlight switch ... 155
Hill descent control switch ... 427
Ignition switch ... 302
Intelligent Auto Headlights ... 156
Memory seat switch ... 233
Power door lock switch ... 198
Steering Assist switch ... 164
Turn signal switch ... 160
Vehicle Dynamic Control (VDC) OFF switch ... 165

T

Tachometer ... 99
Temperature gauge, Engine coolant temperature gauge ... 99
Theft (NISSAN Vehicle Immobilizer System), Engine start ... 150
Three-way catalyst ... 289
Tire pressure, Low tire pressure warning light ... 107
Tires
Flat tire ... 443
Low tire pressure warning system ... 290
Tire and Loading information label ... 492, 531
Tire chains ... 498
Tire dressing ... 462
Tire pressure ... 490
Tire pressure monitoring system (TPMS) ... 290, 443
Tire rotation ... 498

Types of tires 497
Uniform tire quality grading 556
Wheel/tire size 528
Wheels and tires 490
Top
Tether strap child restraints 54
Touch screen display 143
TOW mode 314
Towing
Flat towing 555
Tow truck towing 454
Towing a trailer 537
Towing safety 541
TPMS, Tire pressure monitoring system 290
TPMS with Easy Fill Tire Alert 292
TPMS, Tire pressure warning system 443
Traffic Sign Recognition (TSR) 316
Trailer Brake Controller Unit (TBCU) 167
Trailer BSW function 330
Trailer towing 537
Transceiver
HomeLink® Universal Transceiver 188
Transmission
Automatic Transmission Fluid (ATF) 474
Driving with Automatic Transmission 302
Transmitter, With Intelligent Key system (See Intelligent Key system) 205
Traveling or registering your vehicle in another country 529
Trip computer 136
Trip odometer 136
Turbocharger system 290
Turn signal switch 160

U

Ultra Wide view 250
Underbody cleaning 461
Uniform tire quality grading 556
Unlocking with inside handle 197
USB (Universal Serial Bus) charging connector 171

V

Vanity mirror 232
Vanity mirror lights 188
Variable voltage control system 478
Vehicle
Dimensions 528
Identification number (VIN) 530
Loading information 533
Recovery (freeing a stuck vehicle) 456
Security system 149
Vehicle Dynamic Control (VDC) OFF switch 165
Vehicle Dynamic Control (VDC) system 422
Vehicle information display
Settings 113
Vehicle information display 111
Vehicle information display warnings and indicators 121
Ventilated seats 163
Ventilators 264

W

Walk away lock function 203
Warning
Blind Spot Warning (BSW) 325
Hazard warning flasher switch 442
Intelligent Forward Collision Warning (I-FCW) 392
Lights 102
Low tire pressure warning 123
Rear Door Alert 167
Tire pressure monitoring system (TPMS) 290, 443
Vehicle information display 111
Warning lights, indicator lights and audible reminders 102
Warning labels, Air bag warning labels 88
Warning light
Air bag warning light 88, 105
Anti-lock Braking System (ABS) warning light 105
Brake warning light 102
Electric power steering warning light (red) 103
Electric power steering warning light (yellow) 106
Electric shift control system warning light 103
Electronic parking brake system warning light 106
Low tire pressure warning light 107
Seat belt warning light and chime 104
Warranty, Emission control system warranty 558
Washer switch
Rear window wiper and washer switch 153
Windshield wiper and washer switch 151
Washing 460
Waxing 461
Wheel/tire size 528

Wheels and tires
Care of wheels 461
Cleaning aluminum alloy wheels 461
Cleaning bright wheels 462
Wheels and tires 490, 528
Window washer fluid 475
Window(s)
Cleaning 461
Power windows 182
Windshield deicer 154
Windshield wiper and washer switch 151
Wiper
Rain-sensing auto wiper system 152
Rear window wiper and washer switch 153
Windshield wiper and washer switch 151
Wiper blades 480

MEMO

MEMO

QR code (U.S. only) **QR code (Canada only)**

To view the digital manuals and other useful guides related to your vehicle, go to **www.nissanquickguide.com** for US or **www.nissan.ca** for Canada or snap this QR code with an appropriate QR code reader.

QR code (U.S. only) **QR code (Canada only)**

For vehicles equipped with remote connectivity, including an SOS button, scan to download the smartphone app.

Printing : 2026-08
Publication No.: OM27E0 0Y63U0
Printed in the U.S.A.

Y63-D