
GMC
2027
Sierra/Sierra Denali EV
Owner's Manual

NOT FOR RESALE

Contents

Introduction 1
Keys, Doors, and Windows 7
Seats and Restraints 38
Storage 92
Instruments and Controls 98
Lighting 137
Infotainment System 145
Climate Controls 171
Driving and Operating 176
Vehicle Care 301
Service and Maintenance 374
Technical Data 379
Customer Information 381
Reporting Safety Defects 391
OnStar 395
Connected Services 400
Index 404

Introduction

California Proposition 65 Warning

WARNING

Operating, servicing and maintaining a passenger vehicle or off-highway motor vehicle can expose you to chemicals including engine exhaust, carbon monoxide, phthalates, and lead, which are known to the State of California to cause cancer and birth defects or other reproductive harm. To minimize exposure, avoid breathing exhaust, do not idle engine except as necessary, service your vehicle in a well-ventilated area and wear gloves or wash your hands frequently when servicing your vehicle. For more information go to www.P65Warnings.ca.gov/passenger-vehicle.

©2026 General Motors LLC. All Rights Reserved.

NOT FOR RESALE

Introduction



The names, logos, emblems, slogans, vehicle model names, and vehicle body designs appearing in this manual including, but not limited to, GM, the GM logo, GMC, the GMC Truck Emblem, SIERRA, and DENALI are trademarks and/or service marks of General Motors LLC, its subsidiaries, affiliates, or licensors.

For vehicles first sold in Canada, substitute the name "General Motors of Canada Company" for GMC Division wherever it appears in this manual.

This manual describes features that may or may not be on the vehicle because of optional equipment that was not purchased on the vehicle, model variants, country specifications, features/applications that may not be available in your region, or changes subsequent to this publication's release, including changes in standard or optional content.

Refer to the purchase documentation relating to your specific vehicle to confirm the features.

Canadian Vehicle Owners

You can obtain a copy of this guide in French from your dealer, at www.helminc.com, or from the following address:

Propriétaires Canadiens

On peut obtenir un exemplaire de ce guide en français auprès du concessionnaire ou à l'adresse suivante:

Helm, Incorporated
Attention: Customer Service
47911 Halyard Drive
Plymouth, MI 48170
USA

Québec Consumer Protection Act Disclosure (Québec Customers Only)

Information regarding the availability of replacement parts, repair services, and information necessary to maintain or repair our products (applicable to Quebec consumers only).

Pursuant to the Consumer Protection Act (Québec) and the applicable regulation, General Motors of Canada Company does not guarantee the availability of replacement parts or repair services for its products, nor does it guarantee the availability of information necessary to maintain or repair its products. General Motors of Canada Company does offer access to certain automobile data for purposes of diagnostics, maintenance or repair in accordance with section 39.4 of the Consumer Protection Act (Québec).

Danger, Warning, and Caution

Warning messages found on vehicle labels and in this manual describe hazards and what to do to avoid or reduce them.

NOT FOR RESALE

⚠ Danger

Danger indicates a hazard with a high level of risk which will result in serious injury or death.

⚠ Warning

Warning indicates a hazard that could result in injury or death.

Caution

Caution indicates a hazard that could result in property or vehicle damage.



A circle with a slash through it is a safety symbol which means "Do not," "Do not do this," or "Do not let this happen."

Symbols

Some of the vehicle components and labels use symbols instead of text relating to a specific feature, control, message, gauge, or indicator.

Vehicle Symbol Chart

This chart defines the symbols that may be found on the vehicle.

: Air Conditioning System

: Air Conditioning Refrigerant Oil

: Airbag Readiness Light

: Antilock Brake System (ABS)

: Brake System Warning Light

: Dispose of Used Components Properly

: Do Not Apply High Pressure Water

: Energy Usage and Charge Mode Selection

: Flame/Fire Prohibited

: Flammable

: First Responder

: Forward Collision Alert

: Fuse Block Cover Lock Location

: Fuses

: High Voltage

: ISOFIX/LATCH System Child Restraints

: Keep Fuse Block Covers Properly Installed

: Lane Change Alert

: Lane Departure Warning

: Lane Keep Assist

: Park Assist

: Pedestrian Ahead Indicator

: Power

: Rear Cross Traffic Alert

: Registered Technician

: Remote Start

: Risk of Electrical Fire

: Seat Belt Reminders

: Service Vehicle Soon

: Side Blind Zone Alert

: Tire Pressure Monitor

: Traction Control/StabiliTrak/Electronic Stability Control (ESC)

NOT FOR RESALE

 : Under Pressure

 : Vehicle Ahead Indicator

READY : Vehicle Ready

Additional Instructions or Information

The following symbols are used to indicate additional instructions or information.

 : Shown when the owner's manual has additional instructions or information.

 : Shown when the service manual has additional instructions or information.

⇨ : Shown when there is more information on another page — "see page."

NOT FOR RESALE

Instrument Panel Overview

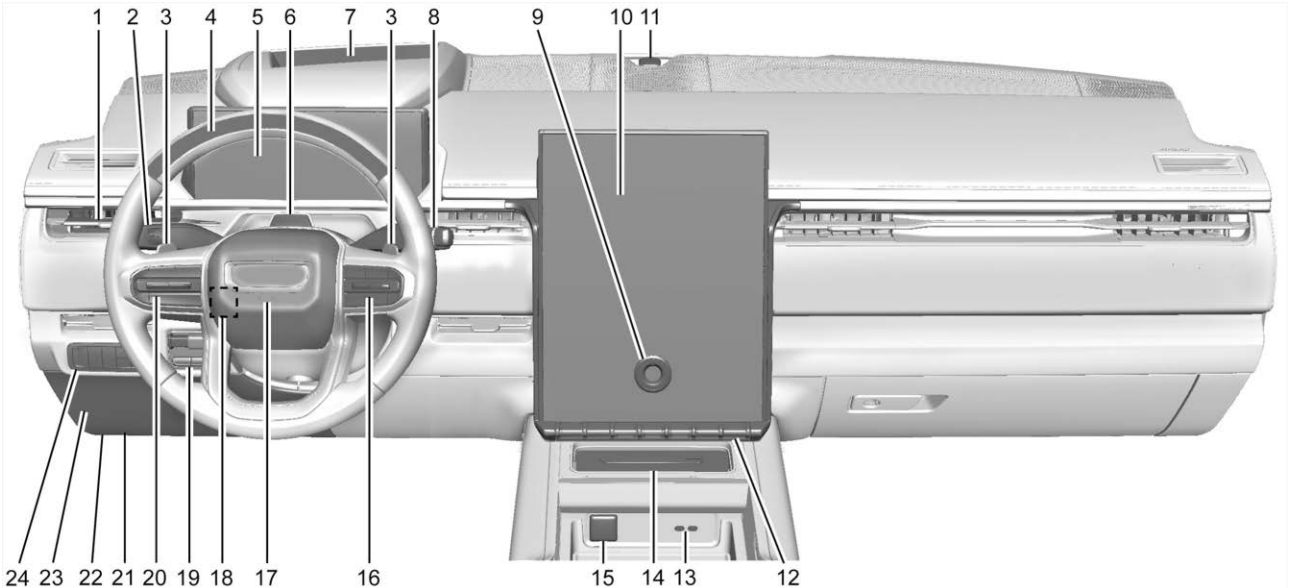

NOT FOR RESALE

1. Air Vents. See *Air Vents* ⇨ *173*.
2. Windshield Wiper/Washer. See *Windshield Wiper/Washer* ⇨ *100*.

   Turn and Lane-Change Signals. See *Turn and Lane-Change Signals* ⇨ *140*.
3. Regenerative Braking. See *Regenerative Braking* ⇨ *204*.
4. Super Cruise Light Bar (If Equipped). See *Super Cruise* ⇨ *238*.
5. Instrument Cluster. See *Instrument Cluster* ⇨ *108*.
6. Driver Monitoring System Camera. See *Driver Attention Assist* ⇨ *277*.
7. Head-Up Display (HUD) (If Equipped). See *Head-Up Display (HUD)* ⇨ *131*.
8. Shift Switches. See *Electric Drive Unit* ⇨ *197*.
9. Infotainment Controls. See *Overview* ⇨ *146*.
10. Infotainment Display. See *Using the System* ⇨ *147*.
11. Light Sensor. See *Automatic Headlight System* ⇨ *139*.

    Vehicle Alarm System. See *Vehicle Security* ⇨ *29*.
12. Dual Automatic Climate Control System. See *Dual Automatic Climate Control System* ⇨ *171*.
13. USB Port. See *USB Port* ⇨ *151*.
14. Wireless Charging. See *Wireless Charging* ⇨ *105*.
15. Power Outlets. See *Power Outlets* ⇨ *101*.
16. Steering Wheel Controls. See *Steering Wheel Controls* ⇨ *146*.

    Driver Information Center Controls. See *Driver Information Center (DIC)* ⇨ *127*.

    Heated Steering Wheel. See *Heated Steering Wheel* ⇨ *99*.
17. Horn. See *Horn* ⇨ *100*.
18. Steering Wheel Adjustment (Out of View). See *Steering Wheel Adjustment* ⇨ *99*.
19. Trailer Brake Control Panel. See "Integrated Trailer Brake Control System" under *General Towing Information* ⇨ *299*.
20. Adaptive Cruise Control. See *Adaptive Cruise Control (Advanced)* ⇨ *214*.

    Super Cruise (If Equipped). See *Super Cruise* ⇨ *238*.

    Forward Collision Alert System. See *Forward Collision Alert (FCA) System* ⇨ *265*.
21. Data Link Connector (Out of View). See *Service Vehicle Soon Light (Propulsion System Failure)* ⇨ *114*.
22. Hood Release (Out of View). See *Hood* ⇨ *18*.
23. Instrument Panel Fuse Block Cover. See *Instrument Panel Fuse Block (Right)* ⇨ *323 Instrument Panel Fuse Block (Left)* ⇨ *325*.
24. Electric Parking Brake. See *Electric Parking Brake* ⇨ *202*.

    Air Suspension (If Equipped). See *Air Suspension* ⇨ *211*.

    Lane Keep Assist. See *Lane Keep Assist (LKA)* ⇨ *279*.

    Power Hood Release. See *Hood* ⇨ *18*.

    Power Tailgate Release. See *Tailgate* ⇨ *25*.

    Instrument Panel Illumination Control. See *Instrument Panel Illumination Control* ⇨ *142*.

NOT FOR RESALE

Keys, Doors, and Windows

Keys and Locks
Keys 7
Remote Key 8
Remote Key Operation 8
Remote Start 13
Door Locks 13
Power Door Locks 15
Delayed Locking 15
Automatic Door Locks 15
Lockout Protection 15
Safety Locks 15
Digital Key 16

Doors
Hood 18
Midgate 21
Tailgate 25

Vehicle Security
Vehicle Security 29
Vehicle Alarm System 29
Immobilizer Operation 30

Exterior Mirrors
Power Mirrors 31
Folding Mirrors 32
Heated Mirrors 32
Automatic Dimming Mirror 32
Reverse Tilt Mirrors 33

Interior Mirrors
Interior Rearview Mirrors 33
Manual Rearview Mirror 33
Automatic Dimming Rearview Mirror 33
Rear Camera Mirror 33

Windows
Windows 35
Power Windows 35
Sun Visors 37

Keys and Locks

Keys

⚠ Warning

Leaving children in a vehicle with a remote key is dangerous and children or others could be seriously injured or killed. They could operate the power windows or other controls or make the vehicle move. The windows will function with the remote key in the vehicle, and children or others could be caught in the path of a closing window. Do not leave children in a vehicle with a remote key.

NOT FOR RESALE





Use the mechanical key inside the remote key for all locks.

To remove the mechanical key, press the button on the side of the remote key near the bottom, and pull the mechanical key out. Never pull the mechanical key out without pressing the button.

The mechanical key may have a bar-coded key tag that the dealer or qualified locksmith can use to make new keys. Store this information in a safe place, not in the vehicle.

See your dealer if you need a replacement or additional key.

If it becomes difficult to turn a key, inspect the key blade for debris. Periodically clean with a brush or pick.

With an active OnStar or connected service plan, an OnStar Advisor may remotely unlock the vehicle. See *OnStar Overview* ⇨ *395*.

If locked out of the vehicle, see *Roadside Assistance Program* ⇨ *386*.

Remote Key

If your remote key is not working correctly:

- The remote key may be too far from the vehicle.
- Other vehicles or objects may be blocking the signal.
- The battery may need replacing. See "Battery Replacement" under *Remote Key Operation* ⇨ *8*.

If the remote key is still not working correctly after checking the distance, location, and battery, see your dealer or a qualified technician for service.

Remote Key Operation

The remote key operates various functions from up to 60 m (197 ft) away and includes a mechanical key for locks. See *Keys* ⇨ *7*.



NOT FOR RESALE

Functions

To view function settings, go to the infotainment home screen and select Settings > Vehicle > Remote Lock, Unlock, Start.

: Press to lock all doors and arm the alarm system. See *Vehicle Alarm System* ⇨ *29*. If enabled, the turn signals flash.

If you press when the driver door is open and the vehicle is on, all doors will lock and the driver door will immediately unlock.

: If enabled, press twice within five seconds and the turn signals flash and the horn sounds to confirm the vehicle is locked.

: Press once to unlock the driver door and disarm the alarm system. See *Vehicle Alarm System* ⇨ *29*.

: Press twice within three seconds to unlock all doors.

If enabled, the turn signal lights flash twice to indicate the doors are unlocked. You can program the remote key to unlock all doors with one press or program the exterior lights to turn on. Follow the onscreen prompts in Settings.

x2 x2 : Press twice to open the tailgate. See *Tailgate* ⇨ *25*.

x2 x2 : Press twice to open the hood. Press once to stop the open motion. To close the power hood, if equipped, press twice and hold the second time until the hood closes. Releasing the button will stop the hood close motion. To open or close, the remote key must be within 30 m (100 ft). See *Hood* ⇨ *18*.

: Press, hold, and release within one second to initiate the vehicle locator. The exterior lights flash and the horn sounds three times. Press and hold for at least three seconds to sound the panic alarm.

The horn sounds and the turn signals flash for about 30 seconds or until you press again or start the vehicle.

x2 x2 : Press twice from outside the vehicle to remote start. You cannot start the vehicle if a remote key is left inside. See *Remote Start* ⇨ *13*.

If equipped, you can operate the folding mirrors through the remote key. See *Folding Mirrors* ⇨ *32*.

If equipped, you can express-operate the windows through the remote key. See *Power Windows* ⇨ *35*.

Keyless Access Operation

The Keyless Access system allows you to access the doors, tailgate, and hood without removing the remote key from your pocket or bag. The remote key must be within 1 m (3 ft) of the tailgate, hood, or door being opened.

Keyless Unlocking

When the doors are locked, press the button on the driver door handle to unlock the driver door. Press the button again within five seconds to unlock the passenger doors, tailgate, and hood. When the doors are locked, press the button on a passenger door handle, if equipped, to unlock all doors.

To program all doors to unlock when you press the driver door button once, on the infotainment home screen, select Settings > Vehicle > Remote Lock, Unlock, Start.

Keyless Locking

Pressing the driver door button will lock all doors if any of the following conditions occur:

- The button was used to unlock all doors.
- Any door has been opened and all doors are now closed.

NOT FOR RESALE

Pressing any passenger door button will lock all doors if any of the following conditions occur:

- It has been more than five seconds since the first button press.
- All doors were unlocked with two button presses.
- Any door has been opened and all doors are now closed.

Passive Locking

The vehicle locks several seconds after you close all doors, turn the vehicle off, and remove at least one or all remote keys from the interior. If other electronic devices interfere with the remote key signal, the vehicle may not detect the remote key inside the vehicle. If passive locking is enabled, the doors may lock with the remote key inside the vehicle. Do not leave the remote key in an unattended vehicle.

To view available settings from the infotainment home screen, touch Settings > Vehicle > Remote Lock, Unlock, Start.

Temporary Disable of Passive Locking

To temporarily disable passive locking, press and hold on the interior door switch with a door open for at least four seconds, or until you hear three audible alerts. Passive locking remains disabled until you press on the interior door or start the vehicle.

Mechanical Key Access

To access a vehicle with the mechanical key in case of a weak remote key battery, see *Door Locks* ⇨ *13*.

Remote Key Alerts

To view available settings for these alerts, on the infotainment home screen, select Settings > Vehicle > Remote Lock, Unlock, Start.

Wireless Charging Error: Placing the remote key on a wireless charger may prompt NO KEY FOUND on the Driver Information Center, and the vehicle may not start. Do not place the remote key on the wireless charger. See *Wireless Charging* ⇨ *105*.

Remote Key Removed From Vehicle Alert: If you turn the vehicle on with a door open, and then close all doors, the vehicle will check for remote keys or digital keys inside. If the vehicle does not detect a remote key or digital key, or you started the vehicle with only a key card present, the Driver Information Center displays NO KEY FOUND and the horn sounds three times. This occurs only once each time you drive the vehicle.

Remote Key Left in Vehicle Reminder: When you turn off the vehicle and leave a remote key inside, the horn sounds three times after you close all doors.

Other conditions can impact the performance of the remote key. See *Remote Key* ⇨ *8*.

Programming Remote Keys to the Vehicle

Only remote keys programmed to the vehicle will work. If a remote key is lost or stolen, a replacement can be purchased and programmed through your dealer. The vehicle can be reprogrammed so that lost or stolen remote keys no longer work. Any remaining remote keys will need to be reprogrammed. Each vehicle can have up to eight remote keys matched to it.

Starting the Vehicle with a Low Remote Key Battery

For improved vehicle security, the remote key is equipped with a motion sensor. If the remote key has been idle for an extended period, when you start the vehicle, the Driver Information

NOT FOR RESALE

Center may display KEY IN SLEEP MODE, MOVE KEY, THEN START. Move the remote key slightly and try starting the vehicle.

If the remote key battery is weak or if there is interference with the signal, when you start the vehicle, the Driver Information Center may display NO KEY FOUND, REPLACE BATTERY IN KEY or NO REMOTE KEY WAS DETECTED PLACE KEY IN KEY POCKET THEN START YOUR VEHICLE.

To start the vehicle:

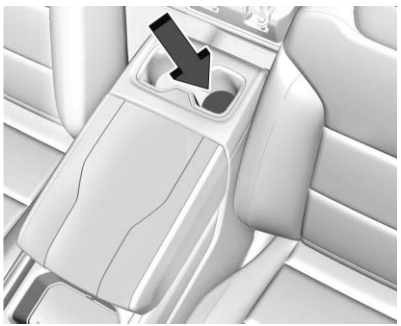

1. Place the remote key in the left cupholder with the buttons facing down.
2. With the vehicle in P (Park) or N (Neutral), press the brake pedal and start the vehicle. See *Power Modes* ⇨ *196*. Replace the remote key battery as soon as possible.

Battery Replacement

⚠ Warning

Never allow children to play with the remote key. The remote key contains a small battery, which can be a choking hazard. If swallowed, internal burns can occur, resulting in severe injury or death. Seek medical attention immediately if a battery is swallowed.

⚠ Warning

To avoid personal injury, do not touch metal surfaces on the remote key when it has been exposed to extreme heat. These surfaces can be hot to the touch at temperatures above 59 °C (138 °F).

Caution

When replacing the battery, do not touch any of the circuitry on the remote key. Static from your body could damage the remote key.

Caution

Always replace the battery with the correct type. Replacing the battery with an incorrect type could potentially create a risk of battery explosion. Dispose of used batteries according to instructions and local laws. Do not attempt to burn, crush, or cut the used battery, and avoid exposing the battery to environments with extremely low air pressures or high temperatures.

Caution

If the remote key is not reassembled properly, liquids could enter the housing and damage the circuitry, resulting in a remote key malfunction and/or failure. To

(Continued)

NOT FOR RESALE

Caution (Continued)

prevent damage, always follow the steps for remote key reassembly in this manual to ensure the remote key is sealed properly whenever the remote key is opened.

Replace the battery if the Driver Information Center displays REPLACE BATTERY IN KEY. The battery is not rechargeable.

To replace the battery:



1. Press the button on the side of the remote key near the bottom and pull the mechanical key out. Never pull the mechanical key out without pressing the button.



2. Use the mechanical key blade in the slot to remove the battery cover by hand.

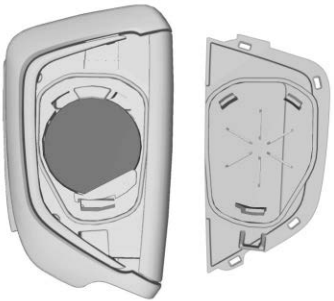

3. Remove the battery cover.
4. Pull the seal by pulling on the tab to access the battery.
5. Remove the old battery. Do not use a metal object.
6. Insert the new battery, positive side facing up. Only Panasonic CR2450 Lithium batteries have been validated to meet GM's minimum performance requirements.
7. Place the seal back into the groove around the battery compartment.
8. Replace the battery cover by snapping it back into the remote key.
9. Reinsert the mechanical key.

NOT FOR RESALE

Remote Start

Use remote start to heat or cool the interior when the vehicle is plugged in to maximize electric range by utilizing electricity from the electrical outlet. Normal system operation will return after the vehicle has been turned on.

(x2): This button is on the remote key.

The following features may come on automatically when the vehicle is started remotely, if equipped, depending on the outside temperature:

- Climate control system, using the previous settings.
- Rear defog. The rear defog indicator light will not come on during a remote start.

Laws restrict the use of remote starters in some areas. Be sure to check local regulations before using the remote starter.

The vehicle cannot be remote started if:

- The remote key is in the vehicle.
- The vehicle has been running for 60 minutes after a remote start.
- The hazard flashers are on.
- The vehicle is not in P (Park).
- The vehicle is already started.

If the battery level is low, do not use the remote start feature. The battery may fully deplete.

The remote key range may be less while the vehicle is running.

Other conditions may affect the range and performance of the remote key. See *Remote Key* ⇨ *8*.

Starting the Vehicle Using Remote Start

Press (x2) twice on the remote key. The turn signal lights will flash to confirm the remote start request was received. During the remote start, the parking lights will remain on as long as the vehicle is on.

The vehicle will turn off after 60 minutes, unless you stop the remote start before remote start cycle has completed or the vehicle is turned on.

To drive, start the vehicle. See *Power Modes* ⇨ *196*.

Extending Remote Start Time

Remote start can be used for up to 60 minutes total.

After a remote start of 60 minutes, or multiple shorter time starts totaling 60 minutes, the vehicle must be started and then turned off before the remote start can be used again.

Canceling a Remote Start

To cancel a remote start, do one of the following:

- Press (x2). The parking lights will turn off.
- Turn on the hazard warning flashers.
- Turn the vehicle on and then off.

Door Locks

⚠ Warning

Unlocked doors can be dangerous.

(Continued)

NOT FOR RESALE

Warning (Continued)

- Passengers, especially children, can easily open the doors and fall out of a moving vehicle. The doors can be unlocked and opened while the vehicle is moving. The chance of being thrown out of the vehicle in a crash is increased if the doors are not locked. So, all passengers should wear seat belts properly and the doors should be locked whenever the vehicle is driven.
- Do not pull the door handles while the vehicle is in motion. The door may open with only a single pull. Always use safety locks when children are in the rear seats. See *Safety Locks* ⇨ *15*.
- Young children who get into unlocked vehicles may be unable to get out. A child can be overcome by extreme heat and can suffer permanent injuries or even death from heat stroke. Always lock the vehicle whenever leaving it.
- Outsiders can easily enter through an unlocked door when you slow down or stop the vehicle. Locking the doors can help prevent this from happening.

To lock or unlock the doors from outside the vehicle:

- Press or on the remote key. See *Remote Key Operation* ⇨ *8*.
- Use the mechanical key in the driver door.

To lock or unlock the doors from inside the vehicle:

- Press or on the power door lock switch.
- Pulling an interior door handle will unlock the door. Pulling the door handle again unlatches it.

Keyless Access

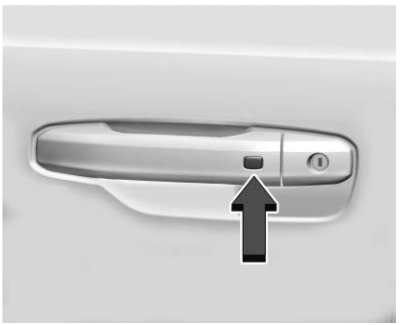

The remote key must be within 1 m (3 ft) of the eTrunk or door being opened or locked. Press the button on the door handle to open. See “Keyless Access Operation” in *Remote Key Operation* ⇨ *8*.

Free-Turning Locks

The door key lock cylinder turns freely when either the wrong key is used, or the correct key is not fully inserted. The free-turning door lock feature prevents the lock cylinder from being forced open. To reset the lock cylinder, ensure the correct key is fully inserted into the lock cylinder. Rotate the key until you feel the lock cylinder click back into place. Remove the key and reinsert fully, rotate the key to unlock the vehicle.

NOT FOR RESALE

Power Door Locks

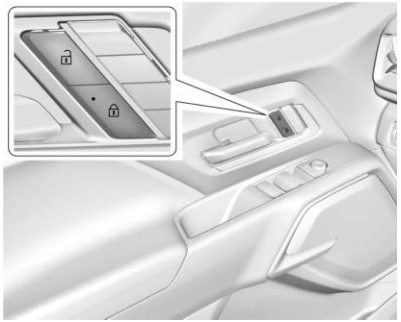

: Press to lock the doors. The indicator light in the switch will illuminate when locked.

: Press to unlock the doors.

Delayed Locking

This feature delays the door locking for five seconds after all doors are closed. While the feature is on, to request a delayed lock, press on the power door lock switch while the vehicle is off and the door is open. An audible alert will sound three times to confirm the feature is active. If you reopen a door before the end of the five-second timer, the timer will reset when you close all doors again. To lock the doors immediately, press on the door switch or remote key.

To view available settings, from the app screen on the infotainment display, select Settings > Vehicle > Power Door Locks.

Automatic Door Locks

The doors lock automatically when you close all the doors, turn the vehicle on, and shift out of P (Park).

If a door is unlocked, opened, and then closed, the doors will lock when you either remove your foot from the brake or drive faster than 13 km/h (8 mph).

To unlock the doors:

- Press on the power door lock switch.
- Shift into P (Park).

Automatic door locking cannot be disabled. Automatic door unlocking can be disabled or programmed to unlock all doors or only the driver door. To view available settings from the app screen on the infotainment display, select Settings > Vehicle > Power Door Locks.

Lockout Protection

This feature protects you from locking remote keys in the vehicle.

When you have locked the vehicle with the driver door open and turned the vehicle on or to accessory mode, all of the doors will lock and then the driver door will unlock.

When you have locked the vehicle with a door open, then turned the vehicle off and closed all doors, the vehicle will check for remote keys inside. If a remote key is detected and the number of remote keys inside has not reduced, the driver door will unlock and the horn will sound three times.

Press and hold on the power door lock switch to manually override this feature.

Safety Locks

The rear door safety locks prevent passengers from opening the rear doors from inside the vehicle.

NOT FOR RESALE

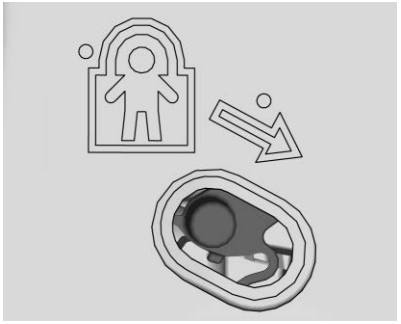

The safety locks are on the inside edge of the rear doors. To engage a safety lock:

1. Move the lever down to the lock position.
2. Close the door.
3. Repeat Steps 1 and 2 on the other door, if desired.

To open a rear door when the safety lock is on:

1. Unlock the door by pulling the inside handle, by pressing the power door unlock switch, or by using the remote key.
2. Open the door from the outside.

To disengage a safety lock:

1. Unlock the door and open it from the outside.
2. Move the lever up to unlock.
3. Repeat Steps 1 and 2 on the other door, if desired.

Digital Key

If equipped and enabled, the digital key feature allows you to access and operate the vehicle using a smart device. Many of the functions performed by a remote key can also be done using a digital key. See *Remote Key Operation* ⇨ *8*.

Bring your remote key to all service appointments at your dealer.

Digital key communicates with the vehicle using Ultrawide Band and Bluetooth Low Energy technology.

Only certain iPhone, Apple Watch, and Android smart devices support digital key. Please see the myGMC app or www.gmc.com/support to see if your smart device is compatible.

If the smart device battery is weak or if there is interference with the signal, the Driver Information Center may display NO KEY FOUND or NO REMOTE KEY WAS DETECTED, PLACE KEY IN KEY POCKET THEN START YOUR VEHICLE when starting the vehicle. Charge the smart device battery as soon as possible.

You can use the myGMC mobile app and device Wallet to pair, manage, or delete your digital key.

If the digital key is not working:

- Check the distance. The smart device may be too far from the vehicle.
- Check the location. Other vehicles or objects may be blocking the signal. Your body could also impact the signal. Hold the smart device in your hand, away from your body, and toward the vehicle for best results.
- Check that the smart device is turned on and has sufficient battery power.
- Check the connection. Your smart device's Bluetooth connection must be enabled.
  - If it is enabled, try to turn Bluetooth off, then back on.
- Check that your smart device has the latest iOS or Android operating system (OS) downloaded.
- Go to www.gmc.com/support for additional support and frequently asked questions.

If the digital key still does not work, use the key card or the commands in your phone's Wallet or myGMC app as a backup.

NOT FOR RESALE

Bring your remote key and key card if you have the digital key serviced at your dealer.

Setting up Digital Key

Digital key is only available if you have accepted the OnStar terms and conditions.

1. Log in to your OnStar account in the myGMC mobile app.
2. Select Controls > Keys, then follow the steps on your screen to pair your smart device.

Using Your Digital Key

Digital key allows you to:

- Use passive entry with your smart device to lock and unlock the vehicle's doors, and access the rear compartments without a remote key.

  See "Keyless Access Operation" under *Remote Key Operation* ⇨ *8*.

- Start the vehicle with just your digital key-enabled smart device present.
- Use remote commands in the device Wallet to lock, unlock, and remote start the vehicle.
- Share your digital key with up to three additional people across eight total devices.

Delete keys through the device Wallet or call an OnStar advisor for assistance.

Key Card

Caution
Placing the key card on the wireless charger may damage the card. If the key card is damaged, it may not unlock or start the vehicle. Do not place the key card on the wireless charger.

Your vehicle may be equipped with a key card that unlocks, locks, and starts the vehicle. The key card works by tapping it on the location of the vehicle shown on the back of the key card.

The key card is a back up to the digital key in case the smart device battery is weak or there is interference to the signal. Carry the key card at all times. Store the key card securely to prevent loss, theft, or damage. Do not write or punch holes into the key card.

Only key cards programmed to the vehicle will work. If you lose your key card or it is stolen, you can purchase and program a replacement through your dealer. To prevent lost or stolen key cards from being able to operate the vehicle, see your dealer. Bring your remote key and digital key if you have the key card serviced at your dealer.

Each vehicle can have up to eight key cards programmed to it.

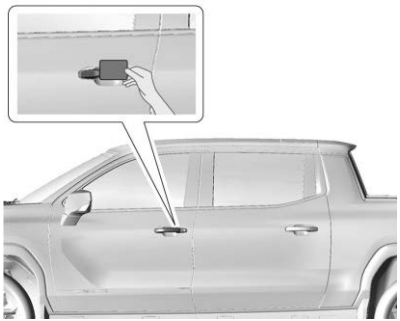

Unlocking with the Key Card

Tap your key card on the rectangular symbol on the driver door handle to unlock the driver door. To program the key card to unlock all doors, on the infotainment home screen, select Settings > Vehicle > Remote Lock, Unlock, Start > Remote Door Unlock.

NOT FOR RESALE

Locking with the Key Card

With all doors closed, the vehicle off, and any door unlocked, tap your key card on the driver door handle to lock all doors.

Starting with the Key Card

You can start your vehicle for a short period after unlocking it with your key card. If the period has ended, you will need to unlock the vehicle with the key card again to start your vehicle.

Doors

Hood

⚠ Warning

Do not drive the vehicle if the hood is not latched completely. The hood could open fully, block your vision, and cause a crash. You or others could be injured. Always close the hood completely before driving. When the hood is not closed, the vehicle will not exceed 42 km/h (26 mph). Close the hood to drive faster than 42 km/h (26 mph).

The hood can be opened in several ways to access the underhood compartment.

Ensure the hood is clear of any objects before opening.

If the hood is not closed, the electronic drive unit lockout prevents the vehicle from shifting out of P (Park). Close the hood to shift out of P (Park). Confirm the hood is closed by checking that the hood is flush with the surrounding components.

If the hood is closed but the ajar message is present, the electronic drive unit lockout can be overridden. Hold the brake for 20 seconds and then shift into D (Drive). The vehicle will not exceed 42 km/h (26 mph). See your dealer for service.

Power Hood Operation

⚠ Warning

You or others could be injured if caught in the path of the power hood. Always supervise the operation of the power hood until it is fully opened or closed and keep hands and other body parts away from the hood when in use.

Ensure the hood is clear of any objects before opening.

The vehicle must be in P (Park), doors unlocked, or the remote key in range of the vehicle to operate the power hood.

To open or close the power hood, do one of the following:

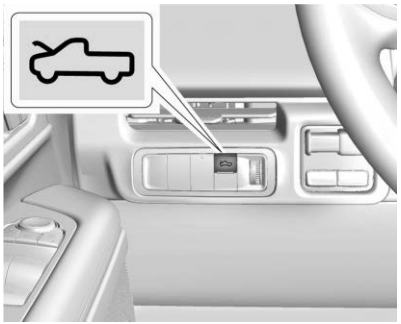

- To open the hood, press the hood button on the instrument panel to the left of the steering wheel.

  To close the hood, press and hold the hood button until the hood closes.

NOT FOR RESALE

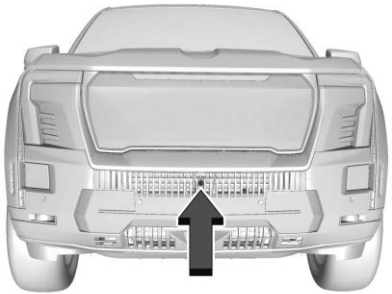

- If equipped, to open or close the hood, press the touchpad on the front fascia once, when the vehicle is unlocked, or the remote key is within 1 m (3 ft) of the vehicle.
- On the remote key, press x2 twice to open the power hood. To close the power hood, press x2 twice and hold the second time until the hood closes. Releasing the button will stop the hood motion. The vehicle must be in P (Park). See *Remote Key Operation* ⇨ *8*.

Pull to Close

Caution
Manually operating the hood during a power open or close can damage the hood system. Always wait for the power operation to complete before manually operating the hood.

To close the hood without using the switches, pull down on the hood until the power assist engages to close the rest of the way. A chime will sound to indicate power assist activation. The power assist will only activate when the hood is above a minimum open position.

Manually forcing the hood to open or close can damage the vehicle. Always allow the automatic operation to complete before using the hood again.

Open Settings

To view available settings from the infotainment screen, touch Settings > Vehicle > Comfort and Convenience > Power Hood Opening.

Maximum

The hood opens to the full open position. Use caution in this mode to avoid hitting overhead obstructions.

Custom

To adjust the hood open angle, press the exterior switch or press the remote key button twice. When the hood reaches the desired position where the height is to be programmed, press the remote key button or the exterior switch one time. The hood will stop.

The hood can be manually moved up or down. Pulling the hood too quickly may cause power assist to engage and close the hood. Press the hood open button until the exterior lights flash and a chime sounds. The hood cannot be set below the preset minimum programmable height. If no exterior lights flash or sound, then the height adjustment may be too low.

The hood is restricted to only open to a default height when the vehicle is on a steep downhill grade.

Off (Manual Operation)

Press and release the touch pad on the front grille. Lift the hood to open to a desired height.

NOT FOR RESALE

Pull down on the hood until the power assist engages to close. A chime will sound to indicate power activation. The power assist will only activate when the hood is above a minimum open position.

To prevent damage to the vehicle, do not move the hood too quickly or use excessive force.

Obstacle Detection Features

If the hood encounters an obstacle during a power open or close cycle, the hood will automatically reverse direction and move away from the obstacle. After removing the obstruction, the power hood operation can be used again.

If the vehicle is locked while the hood is closing and an obstacle is encountered that prevents the hood from completely closing, the horn will sound an alert that the hood did not close.

Falling Hood Detection

If the power hood encounters excess weight or a possible mechanical failure, a repetitive chime will sound and the hood will automatically lower to a stable position. If the hood stops before fulling closing, carefully push the hood closed while keeping hands away from the edges of the hood.

If the hood continues to automatically close after opening, see your dealer for service before using the power hood.

Interfering with the power hood motion or manually closing the hood too quickly may activate the falling hood detection feature. Allow the hood to complete its operation and wait a few seconds before manually closing the hood.

Operating the Hood When There is No Electrical Power

⚠ Warning

Do not drive the vehicle if the hood is not latched completely. The hood could open fully, block your vision, and cause a crash. You or others could be injured. Always close the hood completely before driving.

The manual release cable should only be used for service and/or emergency use, such as loss of vehicle electrical power. Do not store any cargo in the area near the hood release cable.

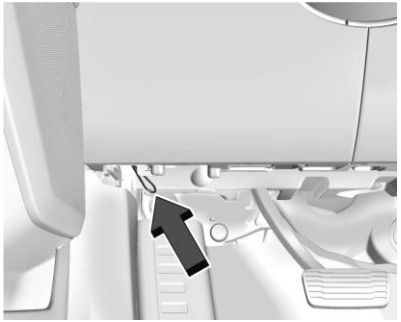

To open the hood:

1. Firmly pull the hood release cable twice to release the hood. It is on the lower left side of the instrument panel.
2. Go to the front of the vehicle and lift the hood to the desired height.

To close the hood:

1. Before closing the hood, make sure all cargo is properly stowed and does not go above or across the hood seal.
2. Pull the hood down until it is secured in the latch.

NOT FOR RESALE

3. Check that the hood is latched completely. If the hood does not latch completely, push down firmly and toward the rear of the vehicle until the latch closes. Repeat with additional force if necessary.

When the hood is not latched, a message will display on the Driver Information Center and the vehicle will not be able to shift out of P (Park). To override this function, press and hold the shift button and brake pedal until the Driver Information Center message shifter unlock complete is displayed. The vehicle's speed will be limited to 42 km/h (26 mph) when the hood is not completely closed.

If the vehicle has lost power, and the hood is open when the power is restored, the power hood and power closing latch will not operate. To allow powered hood operation again, the hood must be manually closed and fully latched.

Emergency Hood Release Button

⚠ Warning

The emergency hood release button inside the underhood compartment will not function when the battery is disconnected or depleted. To avoid personal injury or death, always keep the hood fully closed and latched when storing the vehicle. If the hood is not latched, a person could climb into the underhood compartment and inadvertently close the hood. People should never climb inside the underhood compartment. Never shut the hood when a person is inside.



The underhood compartment is equipped with a glow-in-the-dark emergency hood release button. This button will glow following exposure to light. Press the button to open the hood from inside the underhood compartment.

Midgate

Midgate Operation

This vehicle may be equipped with a midgate and a removable rear glass panel. The midgate allows you to extend the length of the vehicle cargo area.

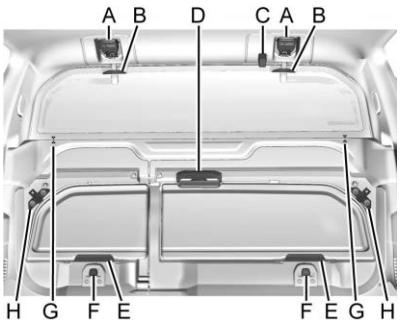

The following are the main components of the midgate system:

A. Glass Latch Levers

NOT FOR RESALE

B. Glass Grab Handles
C. Glass Catch Release Button
D. Glass Stow Retainer
E. Glass Retaining Tabs
F. Switch Buttons
G. Glass Alignment Arrows
H. Corner Secures (If Equipped)

Water may flow between the doors and around the base of the midgate while being directed into a gutter system. There are water symbols located on the midgate switch buttons (F) to indicate that the midgate surface may be wet. Water drippings may be visible inside the vehicle when the full midgate or passthrough doors are opened.

Rear Glass Removal and Storage

⚠ Warning

If the removable rear glass is not stored properly, it could be thrown about the vehicle in a crash or sudden maneuver. People in the vehicle could be injured.

(Continued)

Warning (Continued)

Whenever you store the rear glass in the vehicle, always be sure that it is stored securely in the Midgate® storage pocket.

Do not remove the rear glass when the rear defroster is on. If you do, you may see a discharge spark coming from the glass latch area.

To remove the rear glass:

1. Make sure that the midgate defroster is turned off.
2. Fold the rear seats. See *Rear Seats* ⇨ *48*. The front seats may have to be moved forward slightly to allow the rear seats to fold completely.

   Although the rear glass can be removed without folding the rear seats, you will not be able to access the rear glass storage pocket. Be sure to fold the seats before removing the rear glass.

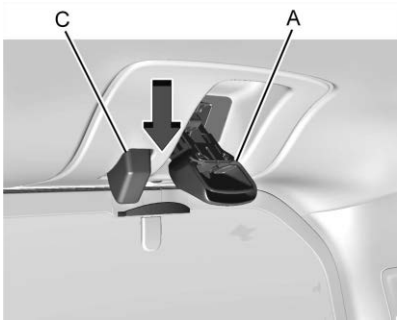

3. Squeeze and pull down the glass latch levers (A), located near the upper corners of the rear glass, to unlatch. Once unlatched, the glass-catch release button (C) will catch the rear glass and prevent it from falling forward.

NOT FOR RESALE

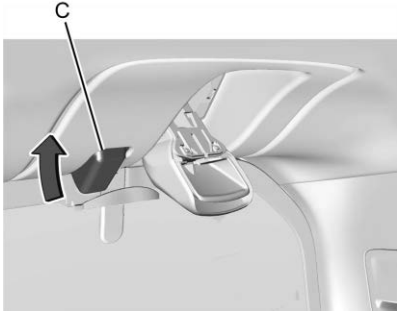

4. While holding the rear glass in place, press the glass-catch release button (C) and pull the top of the rear glass toward you using the grab handles (B) located at the top of the rear glass.

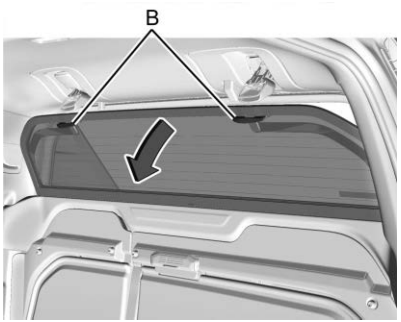

5. With the rear glass tilted toward you, lift it out from the lower window frame channel. Use the grab handles (B) to assist you in removing the rear glass.

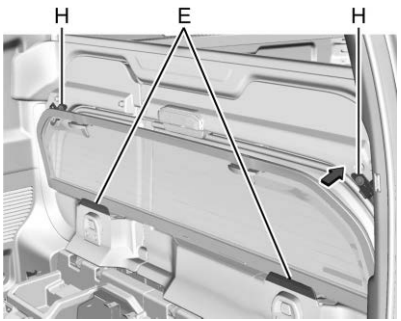

6. If equipped, open Corner Secures (H). Load the rear glass into the storage pocket in the midgate, guiding the lower edge of the rear glass behind the two rear glass retaining tabs (E).

   Hold the rear glass flat against the storage pocket, with grab handles facing you, until the next step.

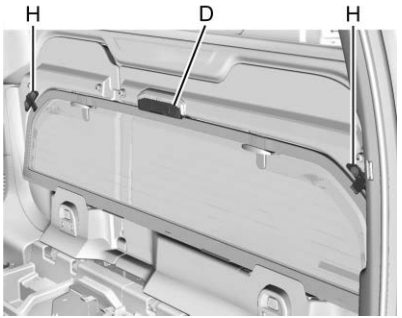

7. Push the glass against the glass stow retainer (D), located on the interior side of the door. Push until the glass handle slides down to lock the glass in place. If equipped, close corner secures (H).

NOT FOR RESALE



Once the glass stow retainer handle is in the locked position with the corner secures closed, the rear glass is securely stored.

8. Push both glass latch levers (A) up to the locked position. You should hear a click when each latch lever locks correctly.

   The rear seats can be returned to the normal position when the rear glass is out and stored properly in the storage pocket.

   To reinstall the rear glass, follow steps 1–2, then reverse steps 3–8.

Lowering the Midgate with the Rear Glass in Place

The midgate can be lowered to allow the cargo area of your vehicle to extend into the cab. The rear glass can be either installed in its normal position, or it can be removed and stored in the rear glass storage pocket.

To lower the midgate:

1. Fold the rear seats. The front seats might have to be moved forward slightly to allow the rear seats to fold. See *Rear Seats* ⇨ *48*.
2. Standing outside of the vehicle, hold the midgate securely so it does not fall forward. Press and hold the switch button depending on configuration below:

Glass and Crossbar in, Pass Through Doors Only

- A short press on either switch button, of less than two seconds opens the larger door of the midgate.
- A long press on either switch button, of three or more seconds opens both doors of the midgate.
- A quick press and release is needed to open the smaller gate if the larger door is already open.

Glass Stowed in Midgate, Full Open Cab

A long press of three or more seconds is required to open the midgate doors if the Rear Defogger is active.

A short press is required to open the midgate doors if the Rear Defogger is not active.

Lowering the Midgate with the Rear Glass in the Storage Pocket



Rear Glass Stored in Glass Storage Pocket

NOT FOR RESALE

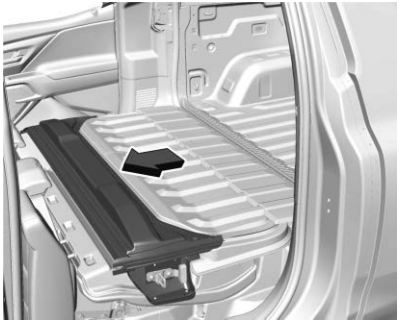

Midgate Lowered with Crossbar Attached

This procedure works the same as the procedure described previously, but when you lower the midgate with the rear glass in the stored position, you will notice that the entire crossbar will lower with the midgate. This is completely normal; however, since the crossbar lowers with the midgate, it will be heavier. As you lower the midgate be ready for the extra weight and do not let the midgate fall as you lower it.

Raising the Midgate

To return the midgate to its normal position:



1. Temporarily secure the seatbelt buckle to the opening slot in the door trim to move it out of the path of the midgate.
2. Raise the midgate up with a firm swinging motion until it latches into place securely. This will help to ensure that the midgate closes with enough force to engage the latches.
3. Once the midgate is securely latched, release the seatbelt buckle from the slot in the door trim.

If the rear glass is removed and you would like to put it back, do so using the instructions given previously.

Tailgate

Manual Tailgate

⚠ Warning

It is extremely dangerous to ride on the tailgate, even when the vehicle is operated at low speeds. People riding on the tailgate can easily lose their balance and fall in response to vehicle maneuvers. Falling from a moving vehicle may result in serious injuries or death. Do not allow people to ride on the tailgate. Be sure everyone in your vehicle is in a seat and using a seat belt properly.

Use the remote key to unlock the tailgate.

Open the tailgate by lifting up on its handle while pulling the tailgate down.

To shut the tailgate, firmly push it upward until it latches.

After closing the tailgate, pull it back to be sure it is latched securely.

NOT FOR RESALE

Some tailgates electronically control if the tailgate is locked or unlocked. If the battery is disconnected or has low voltage, and the tailgate is locked, the tailgate will not open. The tailgate will resume operation when the battery is reconnected or recharged.

MultiPro Tailgate

⚠ Warning

Make sure there is no one in the way of the power tailgate as it is opening and closing, and keep hands away from the tailgate hinges when in use. You or others could be injured if caught in the path of the power tailgate or tailgate hinges.

Caution

To avoid damage to the tailgate, make sure the area behind the tailgate is clear before opening it.

Caution

To avoid vehicle damage, do not open the inner tailgate when the primary tailgate is open if there is not enough distance to the attached hitch ball or trailer.

In the case of a dead battery, the tailgate cannot be opened. Contact your dealer or Roadside Assistance.

Use the remote key to lock or unlock the tailgate. See *Remote Key Operation* ⇨ *8*.

The vehicle must be in P (Park).

Switches in the inner tailgate prevent the primary tailgate from being opened when the inner tailgate is not fully closed. When the primary or inner tailgate are open, a message may display on the Driver Information Center.



To open the primary tailgate, use one of the following methods:



NOT FOR RESALE

- Press x2 twice quickly on the remote key until the tailgate moves. See *Remote Key Operation* ⇨ *8*.

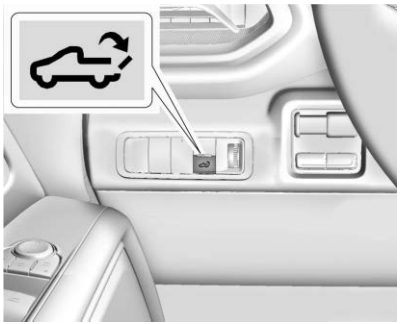

- If equipped, press on the instrument panel to the left of the steering wheel.

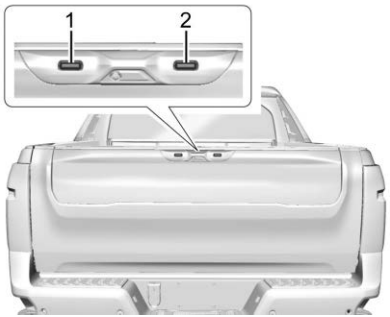

- Press Button 1 to open the primary tailgate. Use the top of the tailgate to pull against if additional force is required. A locked tailgate can be opened if the remote key is within 1 m (3 ft).

To close the primary tailgate, firmly push it upward until it latches. Pull it back to be sure it is latched securely.



To open the inner tailgate:

Press Button 2 on the tailgate handle after unlocking all doors. Pull the top of the tailgate to open.

The inner tailgate may be equipped with an enable/disable feature to prevent the inner tailgate from being opened when a hitch or other equipment is installed that could damage the inner tailgate. To disable the inner tailgate from opening, ensure that the remote key is within 1 m (3 ft) of the rear bumper and then hold Button 2 on the tailgate handle for seven seconds. The tail lights will flash to alert you that the inner gate has been disabled. The inner

NOT FOR RESALE

and outer tailgate can still be operated like a traditional tailgate, but the inner gate will not be able to be opened alone.

To enable the inner tailgate function, hold Button 2 on the tailgate handle for seven seconds while the remote key is within 1 m (3 ft) until the tail lights flash. The inner tailgate can now be opened separately from the outer tailgate.



To close the inner tailgate with the primary tailgate closed, firmly push or pull it upward until it latches. Pull or push it back to be sure it is latched securely.

To close the inner tailgate with the primary tailgate open:

- Hold the primary tailgate and firmly close the inner tailgate.
- Raise the inner tailgate so it meets the primary tailgate and close together at the same time.

When using the tailgate step as a load stop, the load must be secured as the load could shift. See *Cargo Anchor Points* ⇨ *96*.

Tailgate Step (Step Mode)

⚠ Warning

To avoid personal injury, keep hands away from the hinges when operating the tailgate step.

With the primary and inner tailgates open, the tailgate step can be lowered to access the pickup bed.

Using the Step

Caution

When using the tailgate as a step, the load rating is 170 kg (375 lb), which includes a person and cargo. Overloading the tailgate step can cause damage to the tailgate system.



- To lower the tailgate step, press the button at the center of the step. Make sure it lowers to the fully open position.
- To close the tailgate step, lift it firmly. Make sure that both side latches are engaged.

NOT FOR RESALE

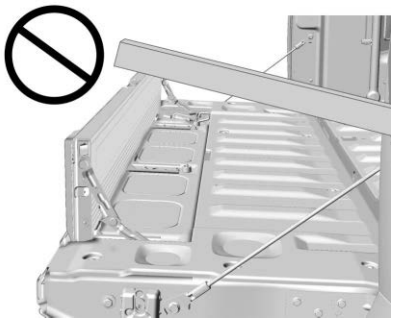

Do not place a load on top of the step when using it as a load stop.

Applying Loads to Tailgates

Caution
Do not put ramp loads on the inner tailgate alone. Damage to the inner tailgate may occur.



Preferred Method

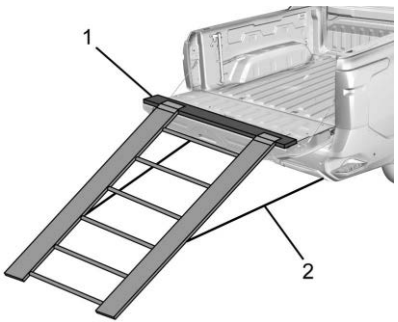

Alternate Method

When applying any load to the tailgate, distribute the weight evenly across the width of the tailgate. This applies to all tailgate types.

- Use a load-distributing item (1).
- Secure the ramp to the bumper (2).

Vehicle Security

This vehicle has theft-deterrent features, but is not theft-proof.

Vehicle Alarm System

This vehicle has an anti-theft alarm system.

The indicator light, on the instrument panel near the windshield, indicates the status of the system.

Arming the Alarm System

To arm the alarm system:

1. Turn off the vehicle.
2. Lock the vehicle in one of three ways:
   - Use the remote key.
   - Use the Keyless Access system.
   - With a door open, press on the interior of the door.

NOT FOR RESALE

- If equipped, locking a door with a mechanical key will not arm the alarm system.

3. After 30 seconds the alarm system will arm, and the indicator light will begin to slowly flash. If equipped, press on the remote key a second time to bypass the 30-second delay and immediately arm the alarm system.

The alarm will be activated if a door, the rear access, or the hood is opened without first disarming the system. When the alarm is activated, the lights flash and the horn sounds. The alarm system will then re-arm to monitor for the next unauthorized event.

Disarming the Alarm System

To disarm the alarm system or turn off the alarm if it has been activated:

- Press on the remote key.
- Unlock the vehicle using the Keyless Access system.
- Start the vehicle.

To avoid setting off the alarm by accident:

- Lock the vehicle after all occupants have exited.
- Always unlock a door with the remote key, or use the Keyless Access system.
- If equipped, if you open the driver door without first unlocking with the remote key, the horn will sound and the lights will flash to indicate pre-alarm. If you do not start or unlock the door by pressing on the remote key during the 10-second pre-alarm, the alarm will be activated.

Detecting a Tamper Condition

If you press on the remote key and the lights flash and horn sounds three times, an alarm occurred previously while the system was armed.

If the alarm has been activated, a message will appear on the Driver Information Center.

Immobilizer Operation

This vehicle has a passive theft-deterrent system.

The system does not have to be manually armed or disarmed.

The vehicle is automatically immobilized when the vehicle is turned off.

The immobilization system is disarmed when the vehicle is turned on and a valid remote key is present in the vehicle.



The security light in the instrument cluster comes on if there is a problem with arming or disarming the theft-deterrent system.

The system has one or more remote keys matched to an immobilizer control unit in the vehicle. Only a correctly matched remote key will start the vehicle. If the remote key is ever damaged, you may not be able to start your vehicle.

When trying to start the vehicle, the security light may come on briefly.

If the vehicle does not start and the security light stays on, there is a problem with the system. Turn the vehicle off and try again.

NOT FOR RESALE

If the vehicle will not turn on or off, and the remote key appears to be undamaged, try another remote key. You may also try placing the remote key in the backup location. See *Remote Key Operation* ⇨ *8*.

If the vehicle will not turn on or off with the other remote key or in the backup location, the vehicle needs service. If the vehicle does turn on or off, the first remote key may be faulty. See your dealer.

It is possible for the immobilizer system to learn new or replacement remote keys. Up to eight remote keys can be programmed for the vehicle. To program additional remote keys, see "Programming Remote Keys to the Vehicle" under *Remote Key Operation* ⇨ *8*.

Do not leave the remote key or device that disarms or deactivates the theft-deterrent system in the vehicle.

Exterior Mirrors

Power Mirrors

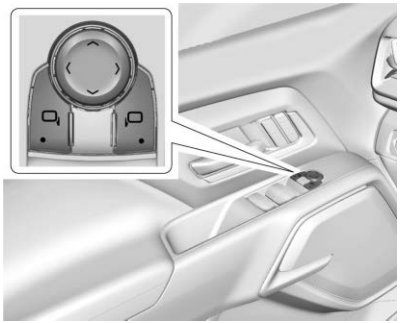

Uplevel Truck Shown, Base Truck Similar

To adjust the mirrors:

1. Press ▭◂ or ▸▭ to select the driver or passenger side mirror. The indicator light comes on.
2. Press the arrows on the control pad to move the mirror up, down, right, or left.
3. Adjust the outside mirror so that the side of the vehicle and the area behind are seen.
4. Press either ▭◂ or ▸▭ again to deselect the mirror. The indicator light goes off.

Puddle Lights

Puddle lights project light to the area of ground below the front and rear doors, on both the driver and passenger side. See *Entry Lighting* ⇨ *143* and *Exit Lighting* ⇨ *143*.

Memory Mirrors

The vehicle may have memory mirrors. See *Memory Seats* ⇨ *44*.

Lane Change Alert (LCA)

The vehicle may have LCA. See *Lane Change Alert (LCA)* ⇨ *273*.

NOT FOR RESALE

Folding Mirrors

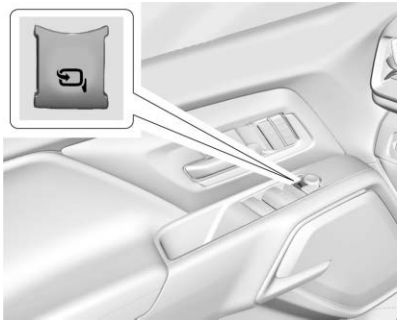

To adjust auto folding mirrors:

1. Press to fold the mirrors inward.
2. Press again to return the mirrors to the driving position.

The outside mirrors may automatically unfold when the vehicle is driven above 20 km/h (12 mph), but may be folded with the auto folding mirror switch. If the vehicle speed is driven above 40 km/h (25 mph), they may automatically unfold and may not be refolded with the auto folding mirror switch.

Resetting the Auto Folding Mirrors

Reset the auto folding mirrors if:

- The mirrors are accidentally obstructed while folding.
- They are accidentally manually folded/unfolded.
- The mirrors do not stay in the unfolded position.
- The mirrors vibrate at normal driving speeds.

Fold and unfold the mirrors one time using the mirror controls to reset them to their normal position. A noise may be heard during the resetting of the auto folding mirrors. This sound is normal after a manual folding operation.

Remote Mirror Folding

If the mirrors have been folded with the auto folding mirror switch, they may not be unfolded by use of remote key.

If the mirrors have not been folded with the auto folding mirror switch and the vehicle is in P (Park), they may be automatically folded/unfolded as follows:

- If doors are locked by pressing on the remote key, the mirrors will fold. If doors are unlocked by pressing on the remote key, the mirrors will unfold. See *Remote Key Operation* ⇨ *8*.
- If doors are locked by pressing the door handle button, the mirrors will fold. If doors are unlocked by pressing the door handle button, the mirrors will unfold. See “Keyless Unlocking/Locking from the Driver Door” in *Remote Key Operation* ⇨ *8*.
- If passive locking is enabled and doors are locked by that feature, the mirrors will fold. See “Passive Locking” in *Remote Key Operation* ⇨ *8*.

Heated Mirrors

To heat the mirrors, press REAR on the infotainment display.

See “Rear Window Defogger” under *Dual Automatic Climate Control System* ⇨ *171*.

Automatic Dimming Mirror

The driver outside mirror automatically adjusts for the glare of the headlights from behind. This feature comes on when the vehicle is started.

NOT FOR RESALE

Reverse Tilt Mirrors

If equipped with reverse tilt mirrors and memory seats, the passenger and/or driver mirror tilts to a preselected position when the vehicle is in R (Reverse). This allows the curb to be seen when parallel parking.

The mirror(s) may move from their tilted position when:

- The vehicle is shifted out of R (Reverse) or remains in R (Reverse) for about 30 seconds.
- The vehicle is turned off.
- The vehicle is driven in R (Reverse) above a set speed.

To view available settings from the infotainment app screen, touch Settings > Vehicle > Comfort and Convenience.

Interior Mirrors

Interior Rearview Mirrors

Adjust the rearview mirror for a clear view of the area behind the vehicle.

Do not spray glass cleaner directly on the mirror. Use a soft towel dampened with water.

Manual Rearview Mirror

If equipped, push the tab forward for daytime use and pull it rearward for nighttime use to avoid glare from headlights of other vehicles.

Automatic Dimming Rearview Mirror

If equipped, automatic dimming reduces the glare of headlights from behind. The dimming feature comes on when the vehicle is started.

Rear Camera Mirror

⚠ Warning

The Rear Camera Mirror has a limited view. Portions of the road, vehicles, and other objects may not be seen. Do not drive or park the vehicle using only this camera. Objects may appear closer than they are. Check the outside mirrors or glance over your shoulder when making lane changes or merging. Failure to use proper care may result in injury, death, or vehicle damage.

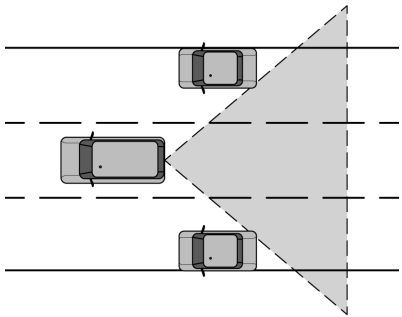

The rear camera mirror provides a wide angle camera view of the area behind the vehicle.

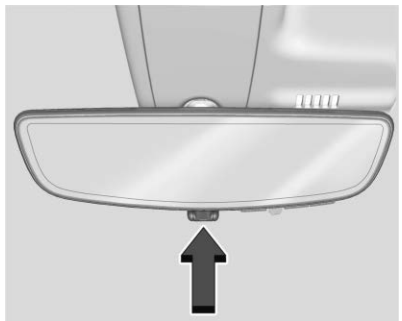

NOT FOR RESALE

Pull the tab back to turn on the display. Push the tab to turn it off. When off the mirror automatically dims. Adjust the mirror for a clear view of the area behind the vehicle while the display is off.

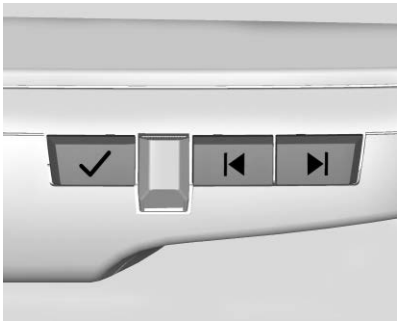

Press ✓ to scroll through the adjustment options.

Press ◀ and ▶ to adjust the settings using the indicators on the mirror. The indicators will remain visible for five seconds after the last button activation, and the settings will remain saved.

The adjustment options are:



- Brightness

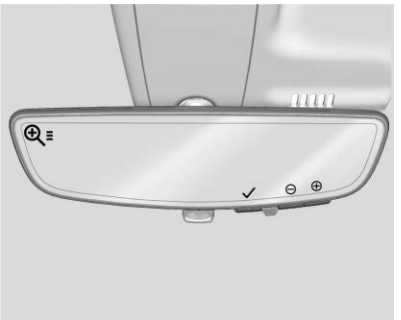

- Zoom



- Tilt

Troubleshooting

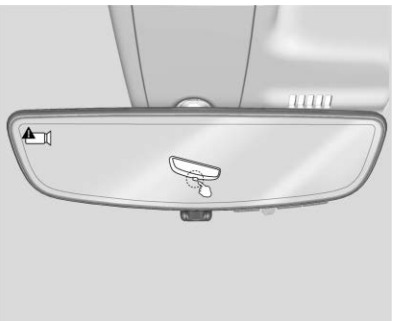

NOT FOR RESALE

See your dealer for service if a blue screen and are displayed in the mirror, and the display shuts off. Also, push the tab forward to return to the automatic dimming mode.

The Rear Camera Mirror may not work properly or display a clear image if:

- There is glare from the sun or headlights. This may obstruct objects from view. If needed, push the tab to turn off the display.
- Dirt, snow, or other debris blocks the camera lens. Clean the lens with a soft damp cloth.
- The camera mounting on the vehicle has been damaged, and/or the position or the mounting angle of the camera has changed.

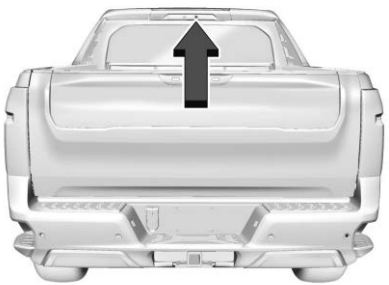

Windows

⚠ Warning

Never leave a child, a helpless adult, or a pet alone in a vehicle, especially with the windows closed in warm or hot weather. They can be overcome by the extreme heat and suffer permanent injuries or even death from heat stroke.



The vehicle aerodynamics are designed to improve electric range performance. This may result in a pulsing sound when either rear window is down and the front windows are up. To reduce the sound, open either a front window or the sunroof, if equipped.

Power Windows

⚠ Warning

Children could be seriously injured or killed if caught in the path of a closing window. Never leave the remote key in a vehicle with children. When there are children in the rear seat, use the window lockout switch to prevent operation of the windows. See *Keys* ⇨ 7.



NOT FOR RESALE

The power windows work when the vehicle is on.

Using the window switch, press to open or pull to close the window.

The windows may be temporarily disabled if they are used repeatedly within a short time.

Window Lockout

This feature prevents rear seat passengers from opening the rear windows.

If equipped, to enable or disable this feature from the infotainment home screen, select Controls > Power Window Lockout.

Window Express Movement

This feature allows you to open all windows fully without holding the switches down. Press the switch down fully, then release to express open the window.

If equipped, pull the window switch up fully and quickly release to express close the window.

Briefly press or pull the window switch in the same direction to stop the window's express movement.

Window Automatic Reversal System

If equipped, the window automatic reversal system reverses and stops window movement if it detects an object in its path. Extreme cold or ice may cause the window to auto-reverse. The window will operate normally after the object or condition is removed.

Automatic Reversal System Override

⚠ Warning

If automatic reversal system override is active, the window will not reverse automatically. You or others could be injured and the window could be damaged. Before using automatic reversal system override, make sure that all people and obstructions are clear of the window path.

If conditions prevent the window from closing, when the vehicle is on, override the automatic reversal system by pulling and holding the window switch.

Programming the Power Windows

If the battery is disconnected or discharged, programming may be necessary. To program an express-close window:

1. Close all doors.
2. Turn the vehicle on.
3. Partially open the window you want to program, then close it and continue to pull the switch briefly after the window has fully closed.
4. Open the window and continue to press the switch briefly after the window has fully opened.

Remote Window Operation

If equipped and enabled, this feature allows you to open all the windows remotely.

To view available settings and enable Remote Window Operation, from the infotainment home screen, touch Settings > Vehicle > Remote Lock, Unlock, Start.

To open the windows remotely, press twice and hold on the remote key.

To close the driver or passenger windows, use the window switches.

NOT FOR RESALE

Sun Visors

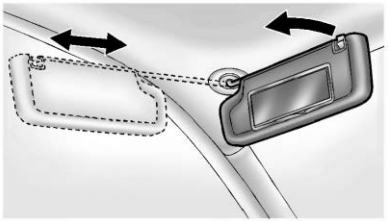

The driver and passenger sun visors block direct sunlight and reduce glare. If equipped, detach and pivot from the center mount to the side window, or extend along the rod for better coverage.

If equipped, swing the visor downward to access card holders or the vanity mirror.

NOT FOR RESALE

Seats and Restraints

Head Restraints
Head Restraints 39

Front Seats
Seat Adjustment 41
Power Seat Adjustment 41
Reclining Seatbacks 42
Lumbar Adjustment 43
Memory Seats 44
Heated and Ventilated Front Seats 46

Rear Seats
Rear Seat Reminder 47
Rear Seats 48
Heated Rear Seats 50

Seat Belts
Seat Belts 50
Buckle To Drive 51
How to Wear Seat Belts Properly 52
Lap-Shoulder Belt 54
Seat Belt Use During Pregnancy 56
Seat Belt Extender 57
Safety System Check 57
Seat Belt Care 57
Replacing Seat Belt System Parts After a Crash 58

Airbag System
Airbag System 58
Where Are the Airbags? 59
When Should an Airbag Inflate? 60
What Makes an Airbag Inflate? 61
How Does an Airbag Restrain? 61
What Will You See After an Airbag Inflates? 62
Passenger Sensing System 63
Servicing the Airbag-Equipped Vehicle 66
Adding Equipment to the Airbag-Equipped Vehicle 67
Airbag System Check 67
Replacing Airbag System Parts After a Crash 68

Child Restraints
Older Children 68
Infants and Young Children 70
Child Restraint Systems 72
Where to Put the Restraint 74
Lower Anchors and Tethers for Children (LATCH System) 75
Replacing LATCH System Parts After a Crash 85
Securing Child Restraints (With the Seat Belt in the Rear Seat) 85
Securing Child Restraints (With the Seat Belt in the Front Passenger Seat) ... 89

NOT FOR RESALE

Head Restraints

⚠ Warning

With head restraints that are not installed and adjusted properly, there is a greater chance that occupants will suffer a neck/spinal injury in a crash. Do not drive until the head restraints for all occupants are installed and adjusted properly.

Front Seats

The front seats have adjustable head restraints in the outboard seating positions.



Adjust the head restraint so that the top of the restraint is at the same height as the top of the occupant's head. This position reduces the chance of a neck injury in a crash.

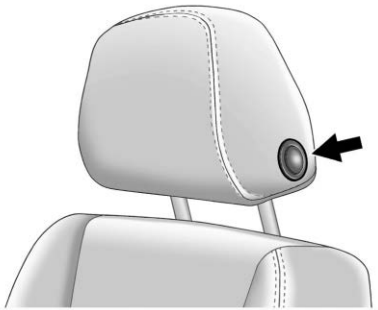

The height of the head restraint can be adjusted.

To raise or lower the head restraint, press the button on the side of the head restraint and pull up or push the head restraint down and release the button. After releasing the button, ensure the head restraint locks in place and is unable to move up or down.

The front seat outboard head restraints are not removable.

Rear Head Restraints

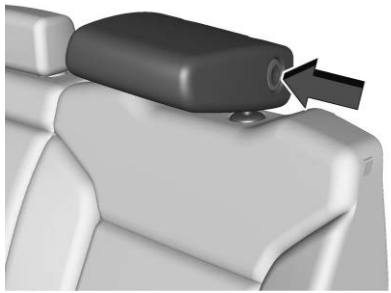

Base Level - Outboard

The rear seat has head restraints in the outboard seating positions that cannot be adjusted.

The rear seat outboard head restraints are designed to be folded.

The head restraint can be folded forward to allow for better visibility when the rear seat is unoccupied. To fold, press the button on the side of the head restraint.

When an occupant or child seat is in the seat, always return the head restraint to the upright position. Pull the head restraint up and push

NOT FOR RESALE

it rearward until it locks into place. Push and pull on the head restraint to make sure that it is locked.

If you are installing a child restraint in the rear seat, see *Lower Anchors and Tethers for Children (LATCH System)* ⇨ 75.

Store the removed head restraints in a secure place. Reinstall the head restraints before the seating position is occupied.

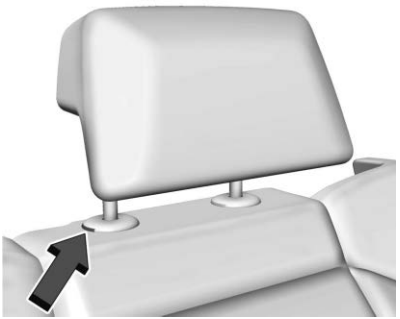

Base Level - Center

The rear seat has an adjustable head restraint in the center seating position. The head restraint can be fully lowered to allow for better visibility when the rear seat is unoccupied. When an occupant is in the seat, always return the head restraint to the upright position. Pull the head restraint up and ensure the head restraint locks in place and is unable to move up or down.

Always adjust the head restraint so that the top of the head restraint is at the same height as the top of the occupant's head.

To lower the head restraint , press the button located on the top of the seatback and push the head restraint down. After releasing the button, ensure the head restraint locks in place and is unable to move up or down.

If you are installing a child restraint in the rear seat, see *Lower Anchors and Tethers for Children (LATCH System)* ⇨ 75.

Store the removed head restraints in a secure place. Reinstall the head restraints before the seating position is occupied.

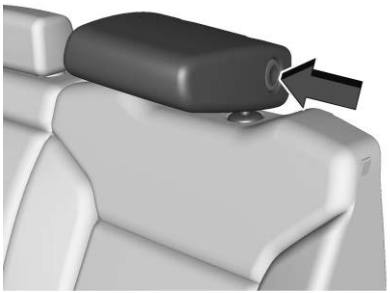

Uplevel

The rear seat has head restraints in the outboard and center seating positions that cannot be adjusted.

The rear seat outboard and center head restraints are designed to be folded.

The head restraint can be folded forward to allow for better visibility when the rear seat is unoccupied. To fold, press the button on the side of the head restraint.

When an occupant or child seat is in the seat, always return the head restraint to the upright position. Pull the head restraint up and push

NOT FOR RESALE

it rearward until it locks into place. Push and pull on the head restraint to make sure that it is locked.

The rear seat head restraints are not removable.

Front Seats

Seat Adjustment

Warning

You can lose control of the vehicle if you try to adjust a driver seat while the vehicle is moving. Adjust the driver seat only when the vehicle is not moving.



To adjust a manual seat, if equipped:

1. Pull the handle at the front of the seat.
2. Slide the seat to the desired position and release the handle.
3. Try to move the seat back and forth to be sure it is locked in place.

To adjust the seatback, see *Reclining Seatbacks* ⇨ *42*.

To adjust the lumbar support, if equipped, see *Lumbar Adjustment* ⇨ *43*.

Power Seat Adjustment

Warning

You can lose control of the vehicle if you try to adjust a driver seat while the vehicle is moving. Adjust the driver seat only when the vehicle is not moving.

Warning

The power seats will work with the vehicle off. Children could operate the power seats and be injured. Never leave children alone in the vehicle.

NOT FOR RESALE

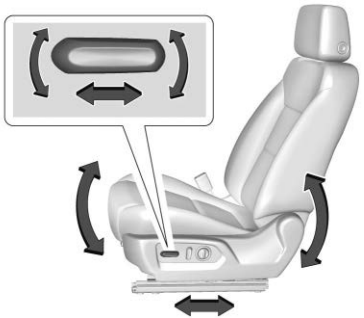

To adjust a power seat, if equipped:

- Move the seat forward or rearward by sliding the control forward or rearward.
- Raise or lower the front part of the seat cushion by moving the front of the control up or down.
- Raise or lower the seat by moving the rear of the control up or down.

To adjust the seatback, see *Reclining Seatbacks* ⇨ *42*.

To adjust the lumbar support, see *Lumbar Adjustment* ⇨ *43*.

Some vehicles are equipped with a feature that activates a vibrating pulse alert in the driver seat to help the driver avoid crashes. See *Driver Attention Assist* ⇨ *277*.

Reclining Seatbacks

⚠ Warning

Sitting in a reclined position when the vehicle is in motion can be dangerous.

Riding with the seatback reclined so that the seat belt is not resting against your body could cause neck, internal, or other serious injuries in a crash.

Always drive and ride with your seatback in the upright position, sit well back, and wear the seat belt properly.



Do not have a seatback reclined if the vehicle is moving.

Manual Reclining Seatbacks

⚠ Warning

If either seatback is not locked, it could move forward in a sudden stop or crash. That could cause injury to the person sitting there. Always push and pull on the seatbacks to be sure they are locked.

NOT FOR RESALE



To adjust a manual seatback, if equipped:

1. Lift the lever.

   The seatback will automatically fold forward.
2. To recline, move the seatback rearward to the desired position, then release the lever to lock the seatback in place.
3. Push and pull on the seatback to make sure it is locked.

To return the seatback to the upright position:

1. Lift the lever fully without applying pressure to the seatback, and the seatback will return to the upright position.
2. Push and pull on the seatback to make sure it is locked.

Power Reclining Seatbacks



To recline a power seatback, if equipped:

- Tilt the top of the control rearward to recline.
- Tilt the top of the control forward to raise.

Lumbar Adjustment

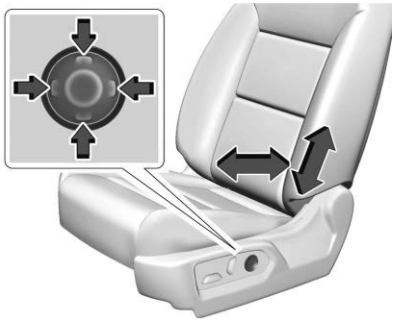

To adjust the lumbar support, if equipped:

- Press and hold the front or rear of the control to increase or decrease lumbar support.
- If equipped, press and hold the top or bottom of the control to raise or lower lumbar support.

NOT FOR RESALE

Memory Seats



If equipped, drivers can save their unique driving positions and a shared exit position using the memory seat feature.

If equipped, drivers can also save other feature position settings, such as the power mirrors, the power steering wheel, and Head-Up Display.

Identifying Driver Number

The vehicle uses the remote key number 1 and 2 to identify the current driver. The Driver Information Center welcome message, "You are driver x for memory recalls," identifies the current remote key number. This message appears the first few times the vehicle is turned on with a different remote key. To ensure Seat Entry Memory works properly, save positions to the 1 or 2 memory button that match the driver number in the welcome message. To help identify remote key IDs, carry only one remote key when entering the vehicle. If the welcome message does not display, perform the following steps:

1. Move all keys and remote keys away from the vehicle.
2. Start the vehicle with another remote key. A Driver Information Center welcome message should display indicating the driver number of the other remote key. Turn the vehicle off and remove the remote key from the vehicle.
3. Start the vehicle with the initial remote key. The Driver Information Center welcome message should display the driver number of the initial remote key.

Saving Seating Positions

Read these instructions completely before saving memory positions.

To save preferred driving positions to 1 and 2:

1. Turn the vehicle on. A Driver Information Center welcome message may indicate the driver number of the current remote key. See "Identifying Driver Number" previously in this section.
2. Adjust all available memory features to the desired driving position.
3. Press and release SET; an audible alert will sound.
4. Immediately after releasing SET, press and hold memory button 1 or 2 that matches the current driver's remote key number until two audible alerts sound. If too much time passes between releasing SET and pressing 1 or 2, the two audible alerts will not sound, indicating the memory positions were not saved. Repeat Steps 3 and 4 to try again.
5. Repeat Steps 1–4 for the other remote key using the other 1 or 2 memory button.

If you are the only driver, you can save the preferred driving positions to both 1 and 2.

NOT FOR RESALE

To save the common exit seating position to that is used by all drivers for Manually Recalling Seating Positions and Auto Seat Exit Memory Recall features, repeat Steps 1–4 using , the exit button.

Manually Recalling Seating Positions

To recall the positions previously saved, press and hold 1, 2, or the button, until the recall is complete.

Manual Memory recall movement for 1, 2 or buttons may be initiated and will complete to the saved memory position if the vehicle is in or out of P (Park).

Enabling Automatic Recalls

- Seat Entry Memory moves the driver seat to the selected 1 or 2 position when the vehicle is started. Select Settings > Vehicle > Seating Position > Driver Seat Entry Memory > ON or OFF. See "Auto Seat Entry Memory Recall" later in this section.
- Seat Exit Memory moves the driver seat to the preferred exit position of the button when the vehicle is turned off and the door is opened. Select Settings > Vehicle > Seating Position > Driver Seat Exit Memory > ON or OFF. See "Auto Seat Exit Memory Recall" later in this section.
- The other feature position settings will be stored and recalled with memory seats.

Auto Seat Entry Memory Recall

Seat Entry Memory will automatically begin movement to the seating positions of the 1 or 2 button corresponding to remote key number 1 or 2 detected by the vehicle when:

- The vehicle is turned on.
- Seating positions have been previously saved to the same 1 or 2 button. See "Saving Seating Positions" previously in this section.
- Seat Entry Memory is enabled. See "Enabling Automatic Recalls" previously in this section.
- The vehicle is in P (Park).
- The other feature position settings will be stored and recalled with memory seats.

If the saved memory seat position does not automatically recall, verify the recall is enabled. See "Enabling Automatic Recalls" previously in this section.

If the memory seat recalls the wrong position, the driver's remote key number 1 or 2 might not match the saved memory button positions. Try using the other remote key or save the positions to the other 1 or 2 memory button. See "Saving Seating Positions" earlier in this section.

Automatic Seat Entry Memory recalls are only available for driver's remote key numbers 1 and 2. Remote keys 3–8 will not provide Seat Entry Memory recalls.

If equipped with Automatic Parking Assist, the seat will automatically move to the seating position saved to the 1 or 2 button corresponding to the driver's remote key number 1 or 2 after leaving a parking space when you have entered the vehicle, closed the driver door, and applied the brake pedal. See *Automatic Parking Assist (APA)* ⇨ *260*.

Auto Seat Exit Memory Recall

Seat Exit Memory will begin movement to the seating position of the button when:

- The driver turns off the vehicle and opens the door within a short time.

NOT FOR RESALE

- A seating position has previously been saved to the button. See “Saving Seating Positions” previously in this section.
- Seat Exit Memory is enabled. See “Enabling Automatic Recalls” previously in this section.
- The vehicle is in P (Park).

Seat Exit Memory is not linked to a remote key. The seating position saved to is used for all drivers.

If equipped with Automatic Parking Assist, the seat will automatically move to the seating position saved to the button after entering a parking space when Automatic Parking Assist is activated, the vehicle is in P (Park), and the driver door is opened. See *Automatic Parking Assist (APA)* ⇨ *260*.

Cancel Memory Seating Recalls

- During any memory recall:

  Press a power seat control

  Press SET memory button

  Press the power mirror control pad

  Press the power tilt and telescoping steering wheel control switch

- During Manual memory recall:

  Release 1, 2, or memory button

- During Auto Seat Entry Memory Recall:

  Turn vehicle off

  Press SET, 1, 2, or memory buttons

- During Auto Seat Exit Memory Recall:

  Press SET, 1, 2, or memory buttons

Obstructions

If something has blocked the seat while recalling a memory position, the recall may stop. Remove the obstruction and try the recall again. If the memory position still does not recall, see your dealer.

Heated and Ventilated Front Seats

⚠ Warning

If temperature change or pain to the skin cannot be felt, the seat heater may cause burns. To reduce the risk of burns, use care when using the seat heater, especially for long periods of time. Do not place anything

(Continued)

Warning (Continued)

on the seat that insulates against heat, such as a blanket, cushion, cover, or similar item. This may cause the seat heater to overheat. An overheated seat heater may cause a burn or may damage the seat.

To operate, select the heated seats launch icon on the infotainment display. The panel will remain open for approximately five seconds.

: Select to heat the driver or passenger seatback. The indicator light is red when heating.

: Select to heat the driver or passenger seatback and cushion. The indicator light is red when heating.

: Select, if available, to ventilate the driver or passenger seat. A ventilated seat has a fan that circulates air through the seat. The air is not cooled. The indicator light is blue when ventilating.

Select the icon once for the highest setting. Each consecutive press lowers the setting until it turns off. If the heated seats are on high, the level may automatically be lowered after approximately 45 minutes.

NOT FOR RESALE

The passenger seat may take longer to heat up.

Auto Heated and Ventilated Seats

When the vehicle is on, this feature will automatically activate the heated or ventilated seats at the level required by the vehicle's interior temperature.

The active high, medium, low, or off heated or ventilated seat level will be indicated by the indicator lights on the infotainment screen. Use the heated or ventilated seat controls on the infotainment display to turn auto heated or ventilated seats off. If the passenger seat is unoccupied, the auto heated or ventilated seats feature will not activate that seat. To enable or disable auto heated or ventilated seats, select Settings > Vehicle > Climate and Air Quality > Auto Cooled/Ventilated or Auto Heated Seats > ON or OFF.

Remote Start Heated and Ventilated Seats

During a remote start, the heated or ventilated seats, if equipped, can be turned on automatically. When it is cold outside, the heated seats turn on, and when it is hot outside the ventilated seats turn on. If the auto heated or ventilated seats feature is not on when then vehicle is turned on, the heated or ventilated seats may be canceled. If necessary, press the heated or ventilated seat button to use the heated or ventilated seats after the vehicle is started.

The heated or ventilated seat indicator lights may turn on during a remote start.

The temperature performance of an unoccupied seat may be reduced. This is normal.

To enable or disable remote start heated or ventilated seats, select Settings > Vehicle > Remote Lock, Unlock, and Start > Remote Start Auto Heated Seats or Remote Start Auto Cooled/Ventilated Seats > ON or OFF. See *Remote Start* ⇨ *13*.

Rear Seats

Rear Seat Reminder

If equipped and enabled, the Driver Information Center displays a REAR SEAT REMINDER LOOK IN REAR SEAT message under certain circumstances. This message indicates there may be an item or passenger in the rear seat. Check the rear seat before exiting the vehicle.

Opening a second row door while the vehicle is on or up to 10 minutes before the vehicle is on, activates the feature. When the vehicle is turned off, the Driver Information Center message and an audible alert activate. The alert does not directly detect objects in the rear seat; instead, it detects when a rear door is opened and closed under certain conditions, indicating that there may be something in the rear seat.

The feature activates only once each time the vehicle is turned on and off. Reactivate it by opening and closing the second row doors. An alert may occur even when there is nothing in the rear seat; for example, if a child enters the vehicle through the rear door and leaves without the vehicle being shut off.

From the infotainment app screen, select Settings > Vehicle > Rear Seat Reminder to turn the feature on or off.

NOT FOR RESALE

Rear Seats

Folding the Rear Seat Cushion (Uplevel Models)

Warning

Folding a rear seat with the seat belts still fastened may cause damage to the seat or the seat belts. Always unbuckle the seat belts and return them to their normal stowed position before folding a rear seat.

Warning

Do not operate the vehicle with the rear seat cushion(s) folded down and the rear seatbacks in the upright position. The folded seat cushion is not locked. It can move when the vehicle is in motion. People in the vehicle could be injured in a sudden stop or crash. Be sure to return the seat cushion to the seating position or fold the adjoining seatback down before driving the vehicle. Push and pull on the seat cushion to make sure it is locked into place.

Either side of the rear seat cushion can be folded down for added cargo space.

Make sure that nothing is on the seat cushion and the floor area in front of the rear seats is clear.



Pull the strap on the rear edge of the rear seat cushion to release the cushion. Tilt the seat cushion forward toward the front of the vehicle.

Raising the Rear Seat Cushion (Uplevel Models)

Return the seat cushion to its original position and push down on the rear part of the seat cushion until it latches. Make sure the seat belts and seat belt buckles are not trapped under the seat cushion and are properly positioned for use.

Folding the Rear Seatback (Uplevel Models)

Warning

Folding a rear seatback with the head restraint in the upright position may cause damage to the seat or the head restraint. Always fold the head restraint before folding the seatback. See *Head Restraints* ⇨ *39*.

Caution

Folding the rear seatback prior to tilting the seat cushion forward may damage the rear seat. Always tilt the rear seat cushion forward before folding the seatback.

Either side of the seatback can be folded down for more cargo space. Fold a seatback only when the vehicle is not moving.

NOT FOR RESALE

The seat cushion must be tilted forward before the folding seatback is folded down. Otherwise, the seatback will not fold down properly.



Pull the release strap located below the seat cushion to unlock the seatback. Fold the seatback forward and down.

Raising the Seatback (Uplevel Models)

⚠ Warning

A seat belt that is improperly routed, not properly attached, or twisted will not provide the protection needed in a crash.

(Continued)

Warning (Continued)

The person wearing the belt could be seriously injured. After restoring the seat to the normal seating position, always check to be sure that the seat belts are properly routed and attached, and are not twisted.

1. Lift the seatback and push it rearward to lock it in place.

   Make sure the seat belts are not pinched by the seatback locking mechanism.

2. Push and pull the top of the seatback to be sure it is locked into position.

If additional cargo space is not needed, the seatbacks should be kept in the upright, locked position.

Folding the Rear Seat Cushion (Base Models)

⚠ Warning

Folding a rear seat with the seat belts still fastened may cause damage to the seat or the seat belts. Always unbuckle the seat belts and return them to their normal stowed position before folding a rear seat.

⚠ Warning

A seat belt that is improperly routed, not properly attached, or twisted will not provide the protection needed in a crash. The person wearing the belt could be seriously injured. After restoring the seat to the normal seating position, always check to be sure that the seat belts are properly routed and attached, and are not twisted.

Either side of the rear seat cushion can be folded up for added cargo space.

Make sure that nothing is on the seat cushion and the floor area in front of the rear seats is clear.

NOT FOR RESALE



To fold the seat, slowly pull the seat cushion up.

To return the seat to the normal seating position, slowly pull the seat cushion down.

Heated Rear Seats

⚠ Warning

If you cannot feel temperature change or pain to the skin, the seat heater may cause burns. See the Warning under *Heated and Ventilated Front Seats* ⇨ *46*.

If available, the buttons are on the rear of the center console. To operate, the vehicle must be on.

Press or to heat the left or right outboard seat cushion. An indicator on the climate control display appears when this feature is on.

This feature turns on at the highest setting. With each press of the button, the heated seat changes to the next lower setting, and then off. Three lights indicate the highest setting, and one light indicates the lowest. If the heated seats are on high, the level may automatically be lowered after approximately 45 minutes.

Remote Start Heated Seats

If equipped, the heated seats will turn on automatically during a remote start if it is cold outside. The heated seat indicators may come on during this operation. The heated seats may cancel when the vehicle is turned on. These features can be manually selected with the heated seat buttons after the vehicle is turned on.

The temperature performance of an unoccupied seat may be reduced. This is normal.

To enable or disable remote start heated seats, select Settings > Vehicle > Remote Lock, Unlock, and Start > Remote Start Auto Heated Seats > ON or OFF. See *Remote Start* ⇨ *13*.

Seat Belts

This section describes how to use seat belts properly, and some things not to do.

⚠ Warning

Do not let anyone ride where a seat belt cannot be worn properly. In a crash, if you or your passenger(s) are not wearing seat belts, injuries can be much worse than if you are wearing seat belts. You can be seriously injured or killed by hitting things inside the vehicle harder or by being ejected from the vehicle. In addition, anyone who is not buckled up can strike other passengers in the vehicle.

It is extremely dangerous to ride in a cargo area, inside or outside of a vehicle. In a collision, passengers riding in these areas are more likely to be seriously injured or killed. Do not allow passengers to ride in any area of the vehicle that is not equipped with seats and seat belts.

Always wear a seat belt, and check that all passenger(s) are restrained properly too.

NOT FOR RESALE

This vehicle has indicators as a reminder to buckle the seat belts. See *Seat Belt Reminders* ⇨ *111*.

Why Seat Belts Work

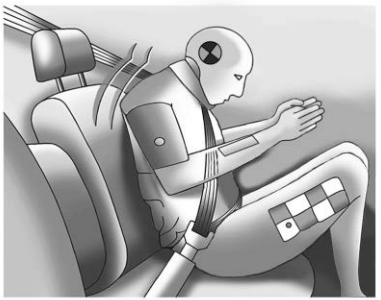

When riding in a vehicle, you travel as fast as the vehicle does. If the vehicle stops suddenly, you keep going until something stops you. It could be the windshield, the instrument panel, or the seat belts!

When you wear a seat belt, you and the vehicle slow down together. There is more time to stop because you stop over a longer distance, and when worn properly, your strongest bones take the forces from the seat belts. That is why wearing seat belts makes such good sense.

Questions and Answers About Seat Belts

Q: Will I be trapped in the vehicle after a crash if I am wearing a seat belt?

A: You *could* be — whether you are wearing a seat belt or not. Your chance of being conscious during and after a crash, so you *can* unbuckle and get out, is *much* greater if you are belted.

Q: If my vehicle has airbags, why should I have to wear seat belts?

A: Airbags are supplemental systems only. They work *with* seat belts — not instead of them. Whether or not an airbag is provided, all occupants still have to buckle up to get the most protection.

Also, in nearly all states and in all Canadian provinces, the law requires wearing seat belts.

Buckle To Drive

If equipped, this feature delays the vehicle from shifting out of P (Park) when the driver seat belt is not buckled. The Buckle to Drive feature must be turned ON in the infotainment system to work. To turn the Buckle to Drive feature on or off, select Settings > Vehicle > Buckle to Drive. See *Teen Driver* ⇨ *165*, if equipped.

If the vehicle is on and the brake pedal is pressed with the vehicle in P (Park) but the driver seat belt is not buckled, a message displays in the Driver Information Center and the vehicle will be delayed from shifting out of P (Park). Buckle the driver seat belt to clear the message and shift out of P (Park). Shifting from P (Park) will be delayed once for each time the vehicle is started.

On some models, Buckle to Drive may also delay shifting out of P (Park) if a front passenger seat belt is unbuckled. A message displays in the Driver Information Center. Buckle the front passenger seat belt to clear the message and shift out of P (Park). This feature may delay the vehicle from shifting out of P (Park) if an object, such as a briefcase, handbag, grocery bag, laptop, or other electronic device, is on the front passenger seat. If this happens, remove the object from the seat or buckle the seat belt to shift out of P (Park).

If the driver, or on some vehicles, the present front passenger remains unbuckled, the Driver Information Center message will turn off after several seconds and the vehicle can be shifted

NOT FOR RESALE

out of P (Park). See “Seat Belts” and “Child Restraints” in the Index for information about the importance of proper restraint use.

If the driver seat belt or the front passenger seat belt is unbuckled when driving, the seat belt reminder audible alert and light(s) will come on. See *Seat Belt Reminders* ⇨ *111*. This feature may not function properly if the airbag readiness light is on. See *Airbag Readiness Light* ⇨ *112*.

How to Wear Seat Belts Properly

Follow these rules for everyone's protection.

There are additional things to know about seat belts and children, including smaller children and infants. If a child will be riding in the vehicle, see *Older Children* ⇨ *68* or *Infants and Young Children* ⇨ *70*. Review and follow the rules for children in addition to the following rules.

It is very important for all occupants to buckle up. Statistics show that unbelted people are hurt more often in crashes than those who are wearing seat belts.

There are important things to know about wearing a seat belt properly.

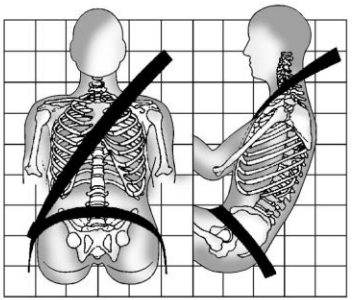

- Sit up straight and always keep your feet on the floor in front of you (if possible).
- Wear the lap part of the belt low and snug on the hips, just touching the thighs. In a crash, this applies force to the strong pelvic bones and you would be less likely to slide under the lap belt. If you slid under it, the belt would apply force on your abdomen. This could cause serious or even fatal injuries.
- Wear the shoulder belt over the shoulder and across the chest. These parts of the body are best able to take belt restraining forces. The shoulder belt locks if there is a sudden stop or crash.

⚠ Warning

You can be seriously injured, or even killed, by not wearing your seat belt properly.

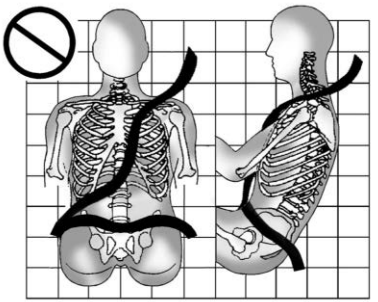

NOT FOR RESALE

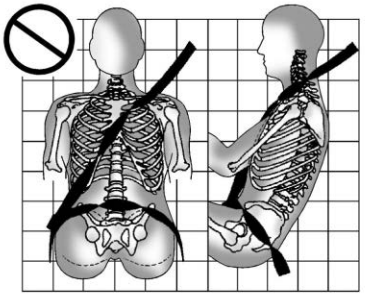

Never allow the lap or shoulder belt to become loose or twisted.

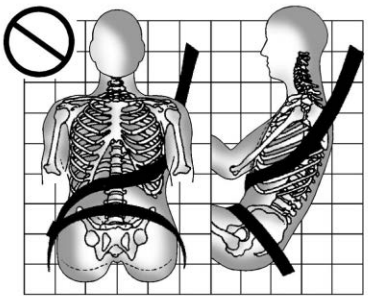

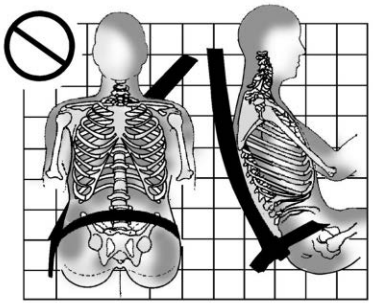

Never wear the shoulder belt under both arms or behind your back.

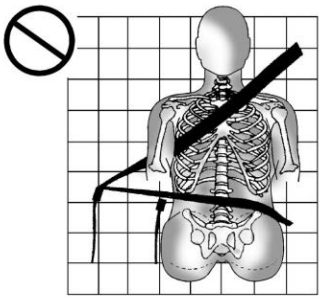

Always use the correct buckle for your seating position.

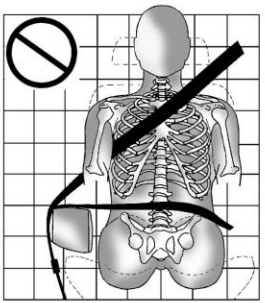

Never route the lap or shoulder belt over an armrest.

⚠ Warning

The seat belt can be pinched if it is routed under plastic trim on the seat, such as trim around the rear seatback folding handle or side airbag. In a crash, pinched seat belts might not provide adequate protection. Never allow seat belts to be routed under plastic trim pieces.

NOT FOR RESALE

⚠ Warning

You can be seriously injured or killed if the shoulder belt is worn behind your back, under your legs, or wrapped around your neck. The shoulder belt can tighten but cannot be loosened if it is locked. The shoulder belt locks when it is pulled all the way out of the retractor. It unlocks when the shoulder belt is allowed to go all the way back into the retractor, but it cannot do this if it is wrapped around you. You may have to cut the seat belt if it is locked and tightened around you.

Lap-Shoulder Belt

All seating positions in the vehicle have a lap-shoulder belt.

The following instructions explain how to wear a lap-shoulder belt properly.

1. Adjust the seat, if the seat is adjustable, so you can sit up straight. To see how, see "Seats" in the Index.

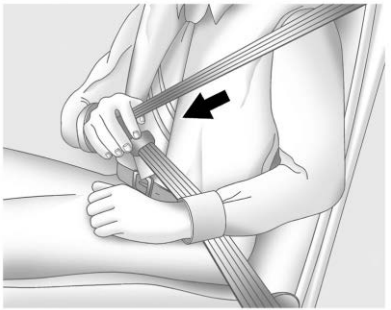

2. Pick up the latch plate and pull the belt across you. Do not let it get twisted.

   The lap-shoulder belt may lock if you pull the belt across you very quickly. If this happens, let the belt go back slightly to unlock it. Then pull the belt across you more slowly.

   If the shoulder portion of a passenger belt is pulled out all the way, the child restraint locking feature may be engaged. See *Child Restraint Systems* ➪ *72*. If this occurs, let the belt go back all the way and start again. If the locking feature stays engaged after letting the belt go back to stowed position on the seat, move the seat rearward or recline the seat until the shoulder belt retractor lock releases.

   Engaging the child restraint locking feature in the front outboard seating position may affect the passenger sensing system, if equipped. See *Passenger Sensing System* ➪ *63*.

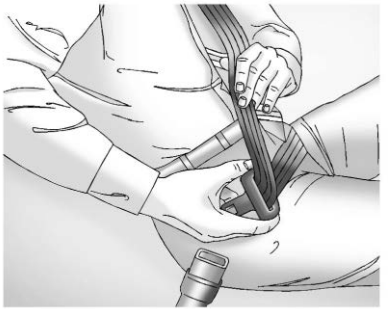

   If the webbing locks in the latch plate before it reaches the buckle, tilt the latch plate flat to unlock.

NOT FOR RESALE

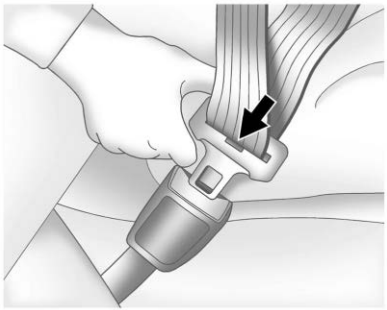

3. Push the latch plate into the buckle until it clicks.

   Pull up on the latch plate to make sure it is secure. If the belt is not long enough, see *Seat Belt Extender* ⇨ 57.

   Position the release pushbutton on the buckle so that the seat belt could be quickly unbuckled if necessary.

   If equipped with a shoulder belt height adjuster, move it to the height that is right for you. See "Shoulder Belt Height Adjuster" later in this section for instructions on use and important safety information.

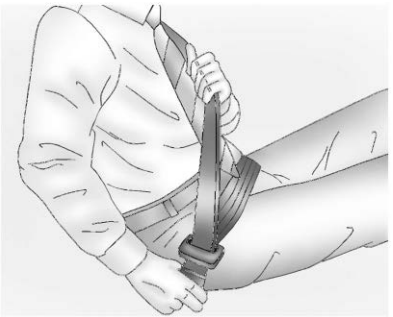

4. To make the lap part tight, pull up on the shoulder belt.

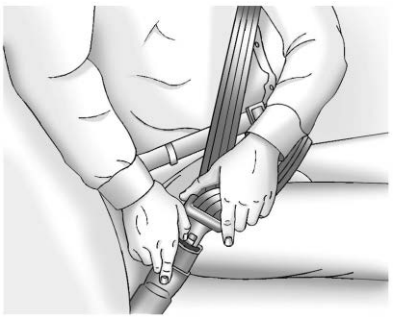

To unlatch the belt, push the release pushbutton on the buckle. The belt should return to its stowed position.

Always stow the seat belt slowly. If the seat belt webbing returns quickly to the stowed position, the retractor may lock and cannot be pulled out. If this happens, pull the seat belt straight out firmly to unlock the webbing, and then release it. If the webbing is still locked in the retractor, see your dealer.

Before a door is closed, be sure the seat belt is out of the way. If a door is slammed against a seat belt, damage can occur to both the seat belt and the vehicle.

Shoulder Belt Height Adjuster

The vehicle may have a shoulder belt height adjuster for the driver and front outboard passenger positions.

Adjust the height so the shoulder portion of the belt is on the shoulder and not falling off of it. The belt should be close to, but not contacting, the neck. Improper shoulder belt height adjustment could reduce the effectiveness of the seat belt in a crash. See *How to Wear Seat Belts Properly* ⇨ 52.

NOT FOR RESALE



Push the release button to move the height adjuster to the desired position.

After the adjuster is set to the desired position, try to move it down without pushing the release button to make sure it has locked into position.

Seat Belt Pretensioners

This vehicle has seat belt pretensioners for the front outboard occupants. Although the seat belt pretensioners cannot be seen, they are part of the seat belt assembly. They can help tighten the seat belts during the early stages of a moderate to severe frontal, near frontal, or rear crash if the threshold conditions for pretensioner activation are met. Seat belt pretensioners can also help tighten the seat belts in a side crash or rollover event.

Pretensioners work only once. If the pretensioners activate in a crash, the pretensioners and probably other parts of the vehicle seat belt system will need to be replaced. See *Replacing Seat Belt System Parts After a Crash* ⇨ *58*.

Do not sit on the outboard seat belt while entering or exiting the vehicle or at any time while sitting in the seat. Sitting on the seat belt can damage the webbing and hardware.

Rear Seat Belt Comfort Guides

Rear seat belt comfort guides may provide added seat belt comfort for older children who have outgrown booster seats and for some adults. When installed on a shoulder belt, the comfort guide positions the shoulder belt away from the neck and head.

Comfort guides are available through your dealer for the rear outboard seating positions. Instructions are included with the comfort guides.

Seat Belt Use During Pregnancy

Seat belts work for everyone, including pregnant women. Like all occupants, they are more likely to be seriously injured if they do not wear seat belts.



A pregnant woman should wear a lap-shoulder belt, and the lap portion should be worn as low as possible, below the rounding, throughout the pregnancy.

The best way to protect the fetus is to protect the mother. When a seat belt is worn properly, it is more likely that the fetus will not be hurt in a crash. For pregnant women, as for anyone, the key to making seat belts effective is wearing them properly.

NOT FOR RESALE

Seat Belt Extender

⚠ Warning

Using a seat belt extender incorrectly can affect certain vehicle safety alerts and systems, potentially leading to unexpected vehicle movement. Always unfasten the seat belt by pushing on the vehicle-mounted buckle release button. Only use the extender-mounted release button to remove the extender after you are done using it. Follow all instructions that come with the seat belt extender.

If the vehicle seat belt will fasten around you, you should use it.

But if a seat belt is not long enough, your dealer will order you an extender. Only a genuine GM issued extender should be used. When you go in to order it, take the heaviest coat you will wear, so the extender will be long enough for you. To help avoid personal injury, do not let someone else use it, and use it only for the seat it is made to fit. The extender has been designed for adults. Never use it for securing child restraints. For more information on the proper use and fit of seat belt extenders, see the instruction sheet that comes with the extender.

Safety System Check

Periodically check the seat belt reminder, seat belts, buckles, latch plates, retractors, shoulder belt height adjusters (if equipped), and seat belt anchorages to make sure they are all in working order. Look for any other loose or damaged seat belt system parts that might keep a seat belt system from performing properly. See your dealer to have it repaired. Torn, frayed, or twisted seat belts may not protect you in a crash. Torn or frayed seat belts can rip apart under impact forces. If a belt is torn or frayed, have it replaced immediately. If a belt is twisted, it may be possible to untwist by reversing the latch plate on the webbing. If the twist cannot be corrected, ask your dealer to fix it.

Make sure the seat belt reminder light is working. See *Seat Belt Reminders* ⇨ *111*.

Keep seat belts clean and dry. See *Seat Belt Care* ⇨ *57*.

Seat Belt Care

Keep belts clean and dry.

⚠ Warning

Do not bleach or dye seat belt webbing. It may severely weaken the webbing. In a crash, they might not be able to provide adequate protection. Clean and rinse seat belt webbing only with mild soap and lukewarm water. Allow the webbing to dry.

Seat belts should be properly cared for and maintained.

Seat belt hardware should be kept dry and free of dust or debris. As necessary exterior hard surfaces and seat belt webbing may be lightly cleaned with mild soap and water. Ensure there is not excessive dust or debris in the mechanism. If dust or debris exists in the system after proper cleaning please see the dealer. Parts may need to be replaced to ensure proper functionality of the system.

NOT FOR RESALE

Replacing Seat Belt System Parts After a Crash

⚠ Warning

A crash can damage the seat belt system in the vehicle. A damaged seat belt system may not properly protect the person using it, resulting in serious injury or even death in a crash. To help make sure the seat belt systems are working properly after a crash, have them inspected and any necessary replacements made as soon as possible.

After a minor crash, replacement of seat belts may not be necessary. But the seat belt assemblies that were used during any crash may have been stressed or damaged. See your dealer to have the seat belt assemblies inspected or replaced.

New parts and repairs may be necessary even if the seat belt system was not being used at the time of the crash.

Have the seat belt pretensioners checked if the vehicle has been in a crash, or if the airbag readiness light stays on after you start the vehicle or while you are driving. See *Airbag Readiness Light* ⇨ *112*.

Airbag System

Here are the most important things to know about the airbag system:

⚠ Warning

You can be severely injured or killed in a crash if you are not wearing your seat belt, even with airbags. Airbags are designed to work with seat belts, not replace them. Also, airbags are not designed to inflate in every crash. In some crashes seat belts are the only restraint. See *When Should an Airbag Inflate?* ⇨ *60*.

Wearing your seat belt during a crash helps reduce your chance of hitting things inside the vehicle or being ejected from it. Airbags are "supplemental restraints" to the seat belts. Everyone in the vehicle should wear a seat belt properly, whether or not there is an airbag for that person.

⚠ Warning

Because airbags inflate with great force and faster than the blink of an eye, anyone who is up against, or very close to, any airbag when it inflates can be seriously injured or killed. Do not sit unnecessarily close to any airbag, as you would be if sitting on the edge of the seat or leaning forward. Seat belts help keep you in position before and during a crash. Always wear a seat belt, even with airbags. The driver should sit as far back as possible while still maintaining control of the vehicle. The seat belts and the front outboard passenger airbags are most effective when you are sitting well back and upright in the seat with both feet on the floor.

Occupants should not lean on or sleep against the door or side windows in seating positions with seat-mounted side impact airbags and/or roof-rail airbags.

NOT FOR RESALE

⚠ Warning

Children who are up against, or very close to, any airbag when it inflates can be seriously injured or killed. Always secure children properly in the vehicle. To read how, see *Older Children* ⇨ *68* or *Infants and Young Children* ⇨ *70*.

The vehicle has the following airbags:

- A frontal airbag for the driver
- A frontal airbag for the front outboard passenger
- A seat-mounted side impact airbag for the driver
- A seat-mounted side impact airbag for the front outboard passenger
- A roof-rail airbag for the driver and the passenger seated directly behind the driver
- A roof-rail airbag for the front outboard passenger and the passenger seated directly behind the front outboard passenger

All vehicle airbags have the word AIRBAG on the trim or on a label near the deployment opening.

For frontal airbags, the word AIRBAG is on the center of the steering wheel for the driver and on the instrument panel for the front outboard passenger.

For seat-mounted side impact airbags, the word AIRBAG is on the side of the seatback or side of the seat closest to the door.

For roof-rail airbags, the word AIRBAG is on the ceiling or trim.

Airbags are designed to supplement the protection provided by seat belts. Even though today's airbags are also designed to help reduce the risk of injury from the force of an inflating bag, all airbags must inflate very quickly to do their job.



There is an airbag readiness light on the instrument cluster, which shows the airbag symbol.

The system checks the airbag electrical system for malfunctions. The light tells you if there is an electrical problem. See *Airbag Readiness Light* ⇨ *112*.

Where Are the Airbags?

⚠ Warning

If something is between an occupant and an airbag, the airbag might not inflate properly or it might force the object into that person causing severe injury or even death. The path of an inflating airbag must be kept clear. Do not put anything between an occupant and an airbag, and do not attach or put anything on the steering wheel hub or on or near any other airbag covering.

Do not use seat accessories that block the inflation path of a seat-mounted side impact airbag.

Never secure anything to the roof of a vehicle with roof-rail airbags by routing a rope or tie-down through any door or window opening. If you do, the path of an inflating roof-rail airbag will be blocked.

NOT FOR RESALE



The driver frontal airbag is in the center of the steering wheel.



The front outboard passenger frontal airbag is in the passenger side instrument panel.



Driver Side Shown, Passenger Side Similar

The driver and front outboard passenger seat-mounted side impact airbags are in the side of the seatbacks closest to the door.



Driver Side Shown, Passenger Side Similar

The roof-rail airbags for the driver, front outboard passenger, and second row outboard passengers are in the ceiling above the side windows.

When Should an Airbag Inflate?

This vehicle is equipped with airbags. See *Airbag System* ⇨ *58*. Airbags are designed to inflate if the impact exceeds the specific airbag system's deployment threshold. Deployment thresholds are used to predict how severe a crash is likely to be in time for the airbags to inflate and help restrain the occupants. The vehicle has electronic sensors that help the

NOT FOR RESALE

airbag system determine the severity of the impact. Deployment thresholds can vary with specific vehicle design.

Frontal airbags are designed to inflate in moderate to severe frontal crashes to help reduce the potential for severe injuries, mainly to the driver's or front outboard passenger's head and chest.

Whether the frontal airbags will or should inflate is not based primarily on how fast the vehicle is traveling. It depends on what is hit, the direction of the impact, and how quickly the vehicle slows down.

Frontal airbags may inflate at different crash speeds depending on whether the vehicle hits an object straight on or at an angle, and whether the object is fixed or moving, rigid or deformable, narrow or wide.

Frontal airbags are not intended to inflate during vehicle rollovers, rear impacts, or many side impacts.

In addition, the vehicle has advanced technology frontal airbags. Advanced technology frontal airbags adjust the restraint according to either crash severity or occupant interaction.

Seat-mounted side impact airbags are designed to inflate in moderate to severe side crashes depending on the location of the impact. These airbags may also inflate in some moderate to severe frontal impacts. Seat-mounted side impact airbags are not designed to inflate in rollovers or rear impacts. A seat-mounted side impact airbag is designed to inflate on the side of the vehicle that is struck.

Roof-rail airbags are designed to inflate in moderate to severe side crashes depending on the location of the impact. In addition, these roof-rail airbags may inflate during a rollover or in a severe frontal impact. Roof-rail airbags are not designed to inflate in rear impacts. Both roof-rail airbags may inflate when either side of the vehicle is struck or if the sensing system predicts that the vehicle is about to roll over on its side, or in a severe frontal impact.

In any particular crash, no one can say whether an airbag should have inflated simply because of the vehicle damage or repair costs.

What Makes an Airbag Inflate?

In a deployment event, the sensing system sends an electrical signal triggering a release of gas from the inflator. Gas from the inflator fills the airbag causing the bag to break out of the cover. The inflator, the airbag, and related hardware are all part of the airbag module.

For airbag locations, see *Where Are the Airbags?* ⇨ *59*.

How Does an Airbag Restrain?

In moderate to severe frontal collisions, even belted occupants can contact the steering wheel or the instrument panel. In moderate to severe side collisions, even belted occupants can contact the inside of the vehicle.

Airbags supplement the protection provided by seat belts by distributing the force of the impact more evenly over the occupant's body.

Rollover capable roof-rail airbags are designed to help contain the head and chest of occupants in the outboard seating positions in the first and second rows. The rollover capable roof-rail airbags are designed to help reduce the risk of full or partial ejection in rollover events, although no system can prevent all such ejections.

But airbags would not help in many types of collisions, primarily because the occupant's motion is not toward those airbags. See *When Should an Airbag Inflate?* ⇨ *60*.

NOT FOR RESALE

Airbags should never be regarded as anything more than a supplement to seat belts.

What Will You See After an Airbag Inflates?

⚠ Warning

When an airbag inflates, there may be dust in the air. This dust could cause breathing problems for people with a history of asthma or other breathing trouble. To avoid this, everyone in the vehicle should get out as soon as it is safe to do so. If you have breathing problems but cannot get out of the vehicle after an airbag inflates, then get fresh air by opening a window or a door. If you experience breathing problems following an airbag deployment, you should seek medical attention.

After frontal and seat-mounted side impact airbags inflate, they quickly deflate, so quickly that some people may not even realize the airbags inflated. Roof-rail airbags may still be at least partially inflated for some time after they inflate. Some components of the airbag module may be hot for several minutes. For location of the airbags, see *Where Are the Airbags?* ⇨ *59*.

The parts of the airbag that come into contact with you may be warm, but not too hot to touch. There may be some smoke and dust coming from the vents in the deflated airbags. Airbag inflation does not prevent people from leaving the vehicle.

⚠ Warning

If the vehicle is in a crash, the sensing system may shut down the high voltage system. When this occurs, the high voltage battery is disconnected and the vehicle will not start. The SERVICE VEHICLE SOON message in the Driver Information Center (DIC) will display. Before the vehicle can operate again, it must be serviced at your dealer.

The vehicle has a feature that may automatically unlock the doors, turn on the interior lights and hazard warning flashers after the airbags inflate. The feature may also activate, without airbag inflation, after an event that exceeds a predetermined threshold.

This vehicle has a post-collision braking feature that may automatically engage to help slow your vehicle down after a crash. See *Post-Collision Braking (Secondary Collision Mitigation Braking)* ⇨ *204* for more information.

Plug-in vehicles have a high voltage battery and a standard 12-volt battery.

If an airbag inflates or the vehicle has been in a crash, the sensing system may shut down the high voltage system. When this occurs, the high voltage battery is disconnected and the vehicle will not start. Before the vehicle can be operated again, it must be serviced at your dealer.

In many crashes severe enough to inflate the airbag, windshields are broken by vehicle deformation. Additional windshield breakage may also occur from the front outboard passenger airbag.

NOT FOR RESALE

- Airbags are designed to inflate only once. After an airbag inflates, you will need some new parts for the airbag system. If you do not get them, the airbag system will not be there to help protect you in another crash. A new system will include airbag modules and possibly other parts. The service manual for the vehicle covers the need to replace other parts.
- The vehicle has a crash sensing and diagnostic module which records information after a crash. See *Vehicle Data Recording and Privacy* ⇨ *392* and *Event Data Recorders* ⇨ *393*.
- Let only qualified technicians work on the airbag system. Improper service can mean that an airbag system will not work properly. See your dealer for service.

Passenger Sensing System

⚠ Warning

A child in a rear-facing child restraint can be seriously injured or killed if the passenger frontal airbag inflates. This is because the

(Continued)

Warning (Continued)

back of the rear-facing child restraint would be very close to the inflating airbag. A child in a forward-facing child restraint can be seriously injured or killed if the passenger frontal airbag inflates and the passenger seat is in a forward position.

Even if the passenger sensing system has turned off the passenger frontal airbag, no system is fail-safe. No one can guarantee that an airbag will not deploy under some unusual circumstance, even though the airbag is turned off.

Never put a rear-facing child restraint in the front seat, even if the airbag is off. If securing a forward-facing child restraint in the front outboard passenger seat, always move the seat as far back as it will go. It is better to secure child restraints in the rear seat. Consider using another vehicle to transport the child when a rear seat is not available.

The vehicle has a passenger sensing system for the front outboard passenger position. The passenger airbag status indicator will light on the overhead console when the vehicle is started.



The passenger airbag status indicator may include text and/or symbols to indicate the passenger frontal airbag is either On or Off.

The passenger airbag status indicator indicating both On and Off will be visible during the system check.

When the system check is complete, the passenger airbag status indicator for either On or Off will be visible.

See *Passenger Airbag Status Indicator* ⇨ *112*.

The passenger sensing system turns off the front outboard passenger frontal airbag under certain conditions. No other airbag is affected by the passenger sensing system.

NOT FOR RESALE

The passenger sensing system works with sensors that are part of the front outboard passenger seat and seat belt. The sensors are designed to detect the presence of a properly seated occupant and determine if the front outboard passenger frontal airbag should be allowed to inflate or not.

According to accident statistics, children are safer when properly secured in a rear seat in the correct child restraint for their weight and size.

Whenever possible, children aged 12 and under should be secured in a rear seating position.

Never put a rear-facing child seat in the front. This is because the risk to the rear-facing child is so great, if the airbag inflates.

The passenger sensing system is designed to turn off the front outboard passenger frontal airbag if:

- The front outboard passenger seat is unoccupied.
- The system determines an infant is present in a child restraint.
- A front outboard passenger takes his/her weight off of the seat for a period of time.
- There is a critical problem with the airbag system or the passenger sensing system.

When the passenger sensing system has turned off the front outboard passenger frontal airbag, the passenger airbag status indicator for Off will light and stay lit as a reminder that the airbag is off. See *Passenger Airbag Status Indicator* ⇨ *112*.

The passenger sensing system is designed to turn on the front outboard passenger frontal airbag anytime the system senses that a person of adult size is sitting properly in the front outboard passenger seat. When the passenger sensing system has allowed the airbag to be enabled, the passenger airbag status indicator for On will light and stay lit as a reminder that the airbag is active.

For some children, including children in child restraints, and for very small adults, the passenger sensing system may or may not turn off the front outboard passenger frontal airbag, depending upon the person's seating posture and body build. Everyone in the vehicle who has outgrown child restraints should wear a seat belt properly — whether or not there is an airbag for that person.

⚠ Warning

If the airbag readiness light ever comes on and stays on, it means that something may be wrong with the airbag system. To help avoid injury to yourself or others, have the vehicle serviced right away. See *Airbag Readiness Light* ⇨ *112* for more information, including important safety information.

If the On Indicator Is Lit for a Child Restraint

The passenger sensing system is designed to turn off the front outboard passenger frontal airbag, if the system determines that an infant is present in a child restraint. If a child restraint has been installed and the passenger airbag status indicator for On is lit:

1. Turn the vehicle off.
2. Remove the child restraint from the vehicle.
3. Remove any additional items from the seat such as blankets, cushions, seat covers, seat heaters, or seat massagers.
4. Reinstall the child restraint following the directions provided by the child restraint manufacturer and refer to *Securing Child*

NOT FOR RESALE

Restraints (With the Seat Belt in the Front Passenger Seat) ⇨ *89 Securing Child Restraints (With the Seat Belt in the Rear Seat)* ⇨ *85*.

Make sure the seat belt retractor is locked by pulling the shoulder belt all the way out of the retractor when installing the child restraint, even if the child restraint is equipped with a seat belt lock off. When the retractor lock is set, the belt can be tightened but not pulled out of the retractor.

5. If, after reinstalling the child restraint and restarting the vehicle, the passenger airbag status indicator for On is still lit, turn the vehicle off. Then slightly recline the vehicle seatback and adjust the seat cushion, if adjustable, to make sure that the vehicle seatback is not pushing the child restraint into the seat cushion. Also make sure the child restraint is not trapped under the vehicle head restraint. If this happens, adjust the head restraint. See *Head Restraints* ⇨ *39*.
6. Restart the vehicle.

   The passenger sensing system may or may not turn off the airbag for a child in a child restraint depending upon the child's size. It is better to secure the child restraint in a rear seat. Never put a rear-facing child restraint in the front seat, even if the passenger airbag status indicator for On is not lit.

If the Off Indicator Is Lit for an Adult-Sized Occupant

⚠ Warning

If the front outboard passenger airbag is turned off for an adult-sized occupant, the airbag will not be able to inflate and help protect that person in a crash, resulting in an increased risk of serious injury or even death. An adult-sized occupant should not ride in the front outboard passenger seat, if the passenger airbag OFF indicator is lit.



If a person of adult size is sitting in the front outboard passenger seat, but the passenger airbag status indicator for Off is lit, it could be because that person is not sitting properly in the seat or that the child restraint locking feature is engaged. Use the following steps to allow the system to detect that person and enable the front outboard passenger frontal airbag:

1. Turn the vehicle off.
2. Remove any additional material from the seat, such as blankets, cushions, seat covers, seat heaters, or seat massagers.
3. Place the seatback in the fully upright position.

NOT FOR RESALE

4. Have the person sit upright in the seat, centered on the seat cushion, with legs comfortably extended.
5. If the shoulder portion of the belt is pulled out all the way, the child restraint locking feature will be engaged. This may unintentionally cause the passenger sensing system to turn the airbag off for some adult-sized occupants. If this happens, unbuckle the belt, let the belt go back all the way, and then buckle the belt again without pulling the belt out all the way.
6. Restart the vehicle and have the person remain in this position for two to three minutes after the passenger airbag status indicator for On is lit.

Additional Factors Affecting System Operation

Warning

Stowing articles under the passenger seat or between the passenger seat cushion and seatback may interfere with the proper operation of the passenger sensing system.

Seat belts help keep the passenger in position on the seat during vehicle maneuvers and braking, which helps the passenger sensing system maintain the passenger airbag status. See “Seat Belts” and “Child Restraints” in the Index for additional information about the importance of proper restraint use.

A thick layer of additional material, such as a blanket or cushion, or aftermarket equipment such as seat covers, seat heaters, and seat massagers can affect how well the passenger sensing system operates. We recommend that you not use seat covers or other aftermarket equipment except when approved by GM for your specific vehicle. See *Adding Equipment to the Airbag-Equipped Vehicle* ⇨ *67* for more information about modifications that can affect how the system operates.

The passenger airbag status indicator for On may be lit if an object, such as a briefcase, handbag, grocery bag, laptop, or other electronic device, is put on an unoccupied seat. If this is not desired remove the object from the seat.

Servicing the Airbag-Equipped Vehicle

Warning

For up to 10 seconds after the vehicle is turned off and the battery is disconnected, an airbag can still inflate during improper service. You can be injured if you are close to an airbag when it inflates. Avoid yellow connectors. They are probably part of the airbag system. Be sure to follow proper service procedures, and make sure the person performing work for you is qualified to do so.

Airbags affect how the vehicle should be serviced. There are parts of the airbag system in several places around the vehicle. Your dealer and the service manual have information about servicing the vehicle and the airbag system. To purchase a service manual, see *Publication Ordering Information* ⇨ *390*.

NOT FOR RESALE

Adding Equipment to the Airbag-Equipped Vehicle

Adding accessories that change the vehicle's frame, bumper system, height, front end, or side sheet metal may keep the airbag system from working properly.

The operation of the airbag system can also be affected by changing, including improperly repairing or replacing, any parts of the following:

- Airbag system, including airbag modules, front or side impact sensors, sensing and diagnostic module, or airbag wiring
- Front seats, including stitching, seams, or zippers
- Seat belts
- Steering wheel, instrument panel, overhead console, ceiling trim, or pillar garnish trim
- Inner door seals, including speakers

Your dealer and the service manual have information about the location of the airbag modules and sensors, sensing and diagnostic module, and airbag wiring along with the proper replacement procedures.

In addition, the vehicle has a passenger sensing system for the front outboard passenger position, which includes sensors that are part of the passenger seat. The passenger sensing system may not operate properly if the original seat trim is replaced with non-GM covers, upholstery, or trim; or with GM covers, upholstery, or trim designed for a different vehicle. Any object, such as an aftermarket seat heater or a comfort-enhancing pad or device, installed under or on top of the seat fabric, could also interfere with the operation of the passenger sensing system. This could either prevent proper deployment of the passenger airbag(s) or prevent the passenger sensing system from properly turning off the passenger airbag(s). See *Passenger Sensing System* ⇨ *63*.

If the vehicle has rollover roof-rail airbags, see *Different Size Tires and Wheels* ⇨ *343* for additional important information.

If the vehicle must be modified because you have a disability and have questions about whether the modifications will affect the vehicle's airbag system, or if you have questions about whether the airbag system will be affected if the vehicle is modified for any other reason, call Customer Assistance. See *Customer Assistance Offices* ⇨ *385*.

Airbag System Check

Caution
If an airbag covering is damaged, opened, or broken, the airbag may not work properly. Do not open or break the airbag coverings. If there are any opened or broken airbag coverings, have the airbag covering and/or airbag module replaced. For the location of the airbags, see *Where Are the Airbags?* ⇨ *59*. See your dealer for service.

The airbag system does not need regularly scheduled maintenance or replacement. Make sure the airbag readiness light is working. See *Airbag Readiness Light* ⇨ *112*.

NOT FOR RESALE

Replacing Airbag System Parts After a Crash

⚠ Warning

A crash can damage the airbag systems in the vehicle. A damaged airbag system may not properly protect you and your passenger(s) in a crash, resulting in serious injury or even death. To help make sure the airbag systems are working properly after a crash, have them inspected and any necessary replacements made as soon as possible.

If an airbag inflates, you will need to replace airbag system parts. See your dealer for service.

If the airbag readiness light stays on after the vehicle is started or comes on when you are driving, the airbag system may not work properly. Have the vehicle serviced right away. See *Airbag Readiness Light* ⇨ *112*.

Child Restraints

Older Children

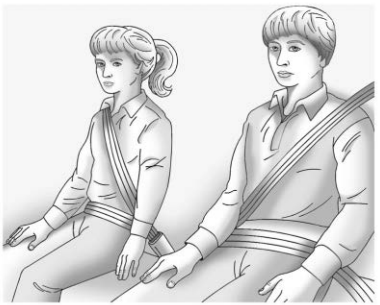

Older children who have outgrown booster seats should wear the vehicle seat belts. See *How to Wear Seat Belts Properly* ⇨ *52*.

The manufacturer instructions that come with the booster seat state the weight and height limitations for that booster. Use a booster seat with a lap-shoulder belt until the child passes the fit test below:

- Sit all the way back on the seat. Do the knees bend at the seat edge? If yes, continue. If no, return to the booster seat.
- Buckle the lap-shoulder belt. Does the shoulder belt rest on the shoulder? If yes, continue. If no, try using the rear seat belt comfort guide, if available. See "Rear Seat Belt Comfort Guides" under *Lap-Shoulder Belt* ⇨ *54*. If a comfort guide is not available, or if the shoulder belt still does not rest on the shoulder, then return to the booster seat.
- Does the lap belt fit low and snug on the hips, touching the thighs? If yes, continue. If no, return to the booster seat.
- Can proper seat belt fit be maintained for the length of the trip? If yes, continue. If no, return to the booster seat.

NOT FOR RESALE

Q: What is the proper way to wear seat belts?

A: An older child should wear a lap-shoulder belt and get the additional restraint a shoulder belt can provide. The shoulder belt should not cross the face or neck. The lap belt should fit snugly below the hips, just touching the top of the thighs. This applies belt force to the child's pelvic bones in a crash. It should never be worn over the abdomen, which could cause severe or even fatal internal injuries in a crash.

Also see "Rear Seat Belt Comfort Guides" under *Lap-Shoulder Belt* ⇨ *54*.

According to accident statistics, children are safer when properly restrained in a rear seating position.

In a crash, children who are not buckled up can strike other people who are buckled up, or can be thrown out of the vehicle. Older children need to use seat belts properly.

⚠ Warning

Never allow more than one child to wear the same seat belt. The seat belt cannot properly spread the impact forces. In a crash, they can be crushed together and seriously injured. A seat belt must be used by only one person at a time.



⚠ Warning

Never allow a child to wear the seat belt shoulder belt under both arms or behind their back. A child can be seriously injured by not wearing the lap-shoulder belt properly. In a crash, the child would not be restrained by the shoulder belt. The child could move too far forward increasing the chance of head and neck injury. The child might also slide under the lap belt. The belt force would then be applied right on the abdomen. That could cause serious or fatal injuries. The shoulder belt should go over the shoulder and across the chest.



NOT FOR RESALE

⚠ Warning

Children can be seriously injured or killed if the shoulder belt is worn behind their back, under their legs, or wrapped around their neck. The shoulder belt can tighten but cannot be loosened if it is locked. The shoulder belt locks when it is pulled all the way out of the retractor. It unlocks when the shoulder belt is allowed to go all the way back into the retractor, but it cannot do this if it is wrapped around the child. Never leave children unattended in a vehicle and never allow children to improperly wear, or play with, the seat belts.

Infants and Young Children

Everyone in a vehicle needs protection! This includes infants and all other children. Neither the distance traveled nor the age and size of the traveler changes the need, for everyone, to use safety restraints. In fact, the law in every state in the United States and in every Canadian province says children up to some age must be restrained while in a vehicle.

⚠ Warning

Children can be seriously injured or killed if the shoulder belt is worn behind their back, under their legs, or wrapped around their neck. The shoulder belt can tighten but cannot be loosened if it is locked. The shoulder belt locks when it is pulled all the way out of the retractor. It unlocks when the shoulder belt is allowed to go all the way back into the retractor, but it cannot do this if it is wrapped around the child. Never leave children unattended in a vehicle and never allow children to improperly wear, or play with, the seat belts.

Every time infants and young children ride in vehicles, they should have the protection provided by appropriate child restraints. Neither the vehicle seat belt system nor its airbag system is designed for them.

Children who are not restrained properly can strike other people, or can be thrown out of the vehicle.

⚠ Warning

Never hold an infant or a child while riding in a vehicle. Due to crash forces, an infant or a child will become so heavy it is not possible to hold it during a crash. For example, in a crash at only 40 km/h (25 mph), a 5.5 kg (12 lb) infant will suddenly become a 110 kg (240 lb) force on a person's arms. An infant or child should be secured in an appropriate child restraint.



NOT FOR RESALE

⚠ Warning

Children who are up against, or very close to, any airbag when it inflates can be seriously injured or killed. Never put a rear-facing child restraint in the front outboard seat. Secure a rear-facing child restraint in a rear seat. It is also better to secure a forward-facing child restraint in a rear seat. If you must secure a forward-facing child restraint in the front outboard seat, always move the front passenger seat as far back as it will go.



⚠ Warning

To reduce the risk of neck and head injury in a crash, infants and toddlers should be secured in a rear-facing child restraint until age two, or until they reach the maximum height and weight limits of their child restraint.

⚠ Warning

A young child's hip bones are still so small that the vehicle seat belt may not remain low on the hip bones, as it should. Instead, it may settle up around the child's abdomen. In a crash, the belt would apply force on a body area that is unprotected by any bony structure. This alone could cause serious or fatal injuries. To reduce the risk of serious or fatal injuries during a crash, young children should always be secured in an appropriate child restraint.

Child restraints are devices used to restrain, seat, or position children in the vehicle and are sometimes called child seats or car seats.

There are three basic types of child restraints:

- Forward-facing child restraints
- Rear-facing child restraints
- Belt-positioning booster seats

The proper child restraint for your child depends on their size, weight, and age, and also on whether the child restraint is compatible with the vehicle in which it will be used.

For each type of child restraint, there are many different models available. When purchasing a child restraint, be sure it is designed to be used in a motor vehicle and is designed by a genuine child restraint manufacturer. If it is, the child restraint will have a label saying that it meets federal motor vehicle safety standards.

The instruction manual that is provided with the child restraint states the weight and height limitations for that particular child restraint. In addition, there are many kinds of child restraints available for children with special needs.

NOT FOR RESALE

Child Restraint Systems

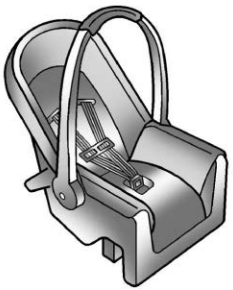

Rear-Facing Infant Restraint

A rear-facing child restraint provides restraint with the seating surface against the back of the infant.

The harness system holds the infant in place and, in a crash, acts to keep the infant positioned in the restraint.



Forward-Facing Child Restraint

A forward-facing child restraint provides restraint for the child's body with the harness.

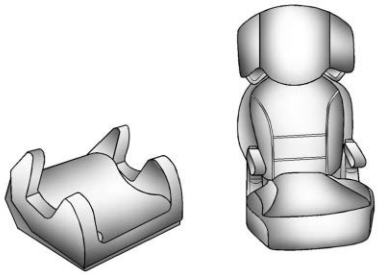

Booster Seats

A belt-positioning booster seat is used for children who have outgrown their forward-facing child restraint. Boosters are designed to improve the fit of the vehicle seat belt system until the child is large enough for the vehicle seat belts to fit properly without a booster seat. See the seat belt fit test in *Older Children* ⇨ *68*.

NOT FOR RESALE



Backless Booster

Backless booster fitment requirement:

Some backless booster seats are not suitable for rear seats that have oversized side seat bolsters, as they can push the backless booster forward from the seat back.

To use a backless booster:

1. Center the booster on the seat cushion.
2. Ensure the backless booster seat contacts the seat back.

If the backless booster does not meet the fit test described in Steps 1–2, select another booster seat.

Securing an Add-On Child Restraint in the Vehicle

⚠ Warning

Each top-tether anchor is designed to anchor only one child restraint. Do not attach more than one child restraint to a single top-tether anchor. The anchor may come loose or break, potentially causing personal injury, property damage, or death.

⚠ Warning

A child can be seriously injured or killed in a crash if the child restraint is not properly secured in the vehicle. Secure the child restraint properly in the vehicle using the vehicle seat belt or LATCH system, following the instructions that came with that child restraint and the instructions in this manual.

To help reduce the chance of injury, the child restraint must be secured in the vehicle. Child restraints must be secured in vehicle seats by the lap belt portion of a lap-shoulder belt, or by the LATCH system. See *Lower Anchors and Tethers for Children (LATCH System)* ⇨ *75* for more information. Never use a seat belt extender when installing a child restraint. Never use non-regulated aftermarket anchors or attachments to secure a child restraint. Children can be endangered in a crash if the child restraint is not properly secured in the vehicle.

When securing an add-on child restraint, see the following:

- Instruction labels provided on the child restraint
- Instruction manual provided with the child restraint
- This vehicle owner's manual

The child restraint instructions are important, so if they are not available, obtain a replacement copy from the manufacturer.

Keep in mind that an unsecured child restraint can move around in a collision or sudden stop and injure people in the vehicle. Be sure to properly secure any child restraint in the vehicle — even when no child is in it.

In some areas Certified Child Passenger Safety Technicians (CPSTs) are available to inspect and demonstrate how to correctly

NOT FOR RESALE

use and install child restraints. In the U.S., see the National Highway Traffic Safety Administration (NHTSA) website to locate the nearest child safety seat inspection station. For CPST availability in Canada, check with Transport Canada or the Provincial Ministry of Transportation office.

Securing the Child Within the Child Restraint

⚠ Warning

A child can be seriously injured or killed in a crash if the child is not properly secured in the child restraint. Secure the child properly following the instructions that came with that child restraint.

Where to Put the Restraint

According to accident statistics, children and infants are safer when properly restrained in an appropriate child restraint secured in a rear seating position.

Whenever possible, children aged 12 and under should be secured in a rear seating position.

Never put a rear-facing child restraint in the front. This is because the risk to the rear-facing child is so great if the airbag deploys.

⚠ Warning

A child in a rear-facing child restraint can be seriously injured or killed if the front passenger airbag inflates. This is because the back of the rear-facing child restraint would be very close to the inflating airbag. A child in a forward-facing child restraint can be seriously injured or killed if the front passenger airbag inflates and the passenger seat is in a forward position.

Even if the passenger sensing system has turned off the front passenger frontal airbag, no system is fail-safe. No one can guarantee that an airbag will not deploy under some unusual circumstance, even though it is turned off.

Secure rear-facing child restraints in a rear seat, even if the airbag is off. If you secure a forward-facing child restraint in the front seat, always move the front passenger seat as far back as it will go. It is better to secure the child restraint in a rear seat.

(Continued)

Warning (Continued)

See *Passenger Sensing System* ⇨ *63* for additional information.

When securing a child restraint with the seat belts in a rear seat position, study the instructions that came with the child restraint to make sure it is compatible with this vehicle.

Child restraints and booster seats vary considerably in size, and some may fit in certain seating positions better than others. Do not install a child restraint in any rear seating position where it cannot be installed securely.

Depending on where you place the child restraint and the size of the child restraint, you may not be able to access adjacent seat belts or LATCH anchors for additional passengers or child restraints. Adjacent seating positions should not be used if the child restraint prevents access to or interferes with the routing of the seat belt.

Adjust the seat in front of a child restraint to ensure proper installation according to the child restraint manual. Move the front

NOT FOR RESALE

seat forward to avoid contact between the child restraint and the seat or any accessories mounted to the seat.

Wherever a child restraint is installed, be sure to follow the instructions that came with the child restraint and secure the child restraint properly.

Keep in mind that an unsecured child restraint can move around in a collision or sudden stop and injure people in the vehicle. Be sure to properly secure any child restraint in the vehicle — even when no child is in it.

Lower Anchors and Tethers for Children (LATCH System)

The LATCH system secures a child restraint during driving or in a crash. LATCH attachments on the child restraint are used to attach the child restraint to the anchors in the vehicle. This system is designed to make installation of a child restraint easier.

In order to use the LATCH system in your vehicle, you need a child restraint that has LATCH attachments. LATCH-compatible rear-facing and forward-facing child seats can be properly installed using either the LATCH anchors or the vehicle's seat belts. Do not use both the seat belts and the LATCH anchorage system to secure a rear-facing or forward-facing child restraint.

Booster seats use the vehicle's seat belts to secure the child and the booster seat. If the manufacturer recommends that the booster seat be secured with the LATCH system, this can be done as long as the booster seat can be positioned properly and there is no interference with the proper positioning of the lap-shoulder belt on the child.

Make sure to follow the instructions that came with the child restraint, and also the instructions in this manual.

When installing a child restraint with a top tether, you must also use either the lower anchors or the seat belts to properly secure the child restraint. A child restraint must never be installed using only the top tether.

NOT FOR RESALE

For a forward-facing five-point harness child restraint where the combined weight of the child and restraint are up to 29.5 kg (65 lb), use either the lower LATCH anchorages with the top tether anchorage, or the seat belt with the top tether anchorage. Where the combined weight of the child and restraint are greater than 29.5 kg (65 lb), use the seat belt with the top tether anchorage only.

Recommended Methods for Attaching Child Restraints

Restraint Type	**Combined Weight of the Child + Child Restraint**	**Use Only Approved Attachment Methods Shown with an X**			
		LATCH – Lower Anchors Only	**Seat Belt Only**	**LATCH** – Lower Anchors and Top Tether Anchor	**Seat Belt and Top Tether Anchor**
Rear-Facing Child Restraint	Up to 29.5 kg (65 lb)	**X**	**X**		
Rear-Facing Child Restraint	Greater than 29.5 kg (65 lb)		**X**		
Forward-Facing Child Restraint	Up to 29.5 kg (65 lb)			**X**	**X**
Forward-Facing Child Restraint	Greater than 29.5 kg (65 lb)				**X**

See *Securing Child Restraints (With the Seat Belt in the Front Passenger Seat)* ⇨ *89 Securing Child Restraints (With the Seat Belt in the Rear Seat)* ⇨ *85*.

Child restraints built after March 2014 are labeled with the maximum child weight, with which the LATCH system can be used for installing the child restraint.

The following explains how to attach a child restraint with these attachments in the vehicle.

Not all vehicle seating positions have lower anchors. In this case, the seat belt must be used (with top tether where available) to secure the child restraint. See *Securing Child Restraints*

NOT FOR RESALE

(With the Seat Belt in the Front Passenger Seat) ⇨ *89 Securing Child Restraints (With the Seat Belt in the Rear Seat)* ⇨ *85.*

Lower Anchors

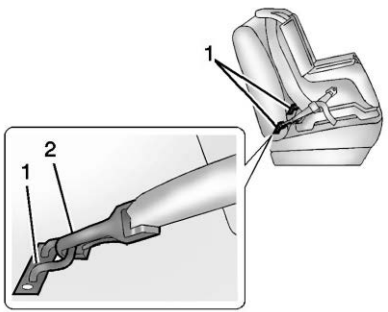

Lower anchors (1) are metal bars built into the vehicle. There are two lower anchors for each LATCH seating position that will accommodate a child restraint with lower attachments (2).

Top Tether Anchor

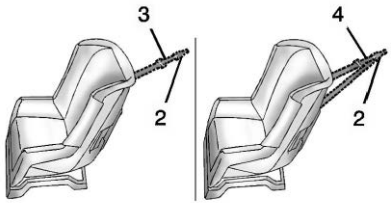

A top tether (3, 4) is used to secure the top of the child restraint to the vehicle. A top tether anchor is built into the vehicle. The top tether attachment hook (2) on the child restraint connects to the top tether anchor in the vehicle in order to reduce the forward movement and rotation of the child restraint during driving or in the event of a crash.

The child restraint may have a single tether (3) or a dual tether (4). Either will have a single attachment hook (2) to secure the top tether to the anchor.

Some child restraints with a top tether are designed for use with or without the top tether being attached. Others require the top tether always to be attached. In Canada, the law requires that forward-facing child restraints have a top tether, and that the tether be attached. Be sure to read and follow the instructions for your child restraint.

Lower Anchor and Top Tether Anchor Locations

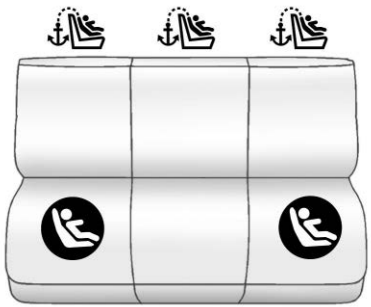

: Seating positions with top tether anchors.

: Seating positions with two lower anchors.

NOT FOR RESALE



To assist in locating the lower anchors, each seating position with lower anchors has two labels with the lower anchor symbol on them, near the crease between the seatback and the seat cushion.

Do not install a child restraint that requires lower anchors in the center rear seating position. See *Securing Child Restraints (With the Seat Belt in the Front Passenger Seat)* ⇨ *89 Securing Child Restraints (With the Seat Belt in the Rear Seat)* ⇨ *85* for more information.



For uplevel models, there are top tether anchor symbols to assist you in locating the top tether anchors.

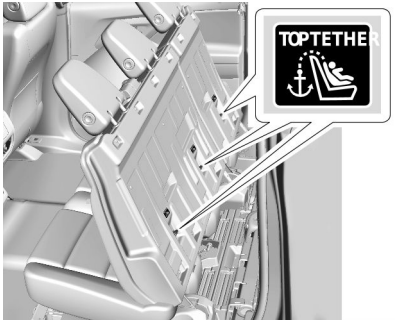

Uplevel Models

For uplevel models, the top tether anchors for each rear seating position are on the back of the rear seatback. Release the seatback and rotate the seatback forward to access the anchors. See *Rear Seats* ⇨ *48*. Be sure to use an anchor located directly behind the seating position where the child restraint will be placed.

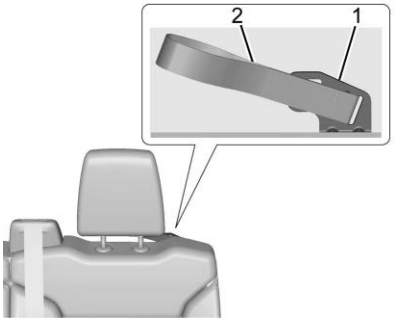

Driver Side Anchor and Loop (Base Model)

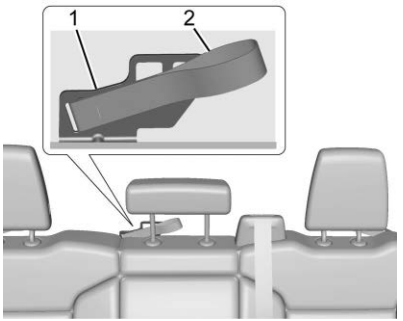

Center Anchor and Loop (Base Model)

NOT FOR RESALE

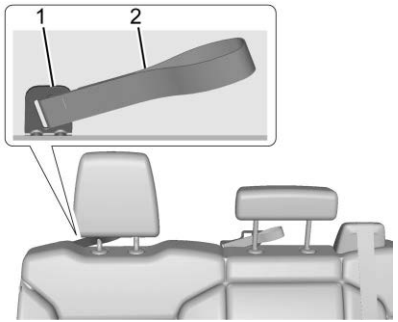

Passenger Side Loop (Base Model)

Do not attach a top tether attachment hook to the loop near the top of the seatback of the seating position in which the child restraint is installed.

For base models, the top tether is routed through loops (2) to the top tether anchors (1). Be sure to use the correct anchor for the seating position where the child restraint will be placed.

Be sure to read the following instructions to properly install a child restraint using these loops and anchors.

Do not secure a child restraint in a position without a top tether anchor if a national or local law requires that the top tether be attached, or if the instructions that come with the child restraint say that the top tether must be attached.

According to accident statistics, children and infants are safer when properly restrained in a child restraint system or infant restraint system secured in a rear seating position. See *Where to Put the Restraint* ⇨ *74* for additional information.

Securing a Child Restraint Designed for the LATCH System

⚠ Warning

A child could be seriously injured or killed in a crash if the child restraint is not properly attached to the vehicle using either the LATCH anchors or the vehicle seat belt. Follow the instructions that came with the child restraint and the instructions in this manual.

⚠ Warning

Do not attach more than one child restraint to a single anchor, except for the center top tether anchors in the crew cab models. Attaching more than one child restraint to a single anchor could cause the anchor or attachment to come loose or even break during a crash. A child or others could be injured. To reduce the risk of serious or fatal injuries during a crash, attach only one child restraint per anchor.

⚠ Warning

Children can be seriously injured or strangled if a shoulder belt is wrapped around their neck. The shoulder belt can tighten but cannot be loosened if it is locked. The shoulder belt locks when it is pulled all the way out of the retractor. It unlocks when the shoulder belt is allowed to go all the way back into the retractor, but it cannot do this if it is wrapped around

(Continued)

NOT FOR RESALE

Warning (Continued)

a child's neck. If the shoulder belt is locked and tightened around a child's neck, the only way to loosen the belt is to cut it.

Buckle any unused seat belts behind the child restraint so children cannot reach them. Pull the shoulder belt all the way out of the retractor to set the lock, and tighten the belt behind the child restraint after the child restraint has been installed.

Caution

Do not let the LATCH attachments rub against the vehicle's seat belts. This may damage these parts. If necessary, move buckled seat belts to avoid rubbing the LATCH attachments.

Do not fold the rear seat cushion when the seat is occupied. Do not fold the empty rear seat with a seat belt buckled. This could damage the seat belt or the seat. Unbuckle and return the seat belt to its stowed position, before folding the seat.

If you need to secure more than one child restraint in the rear seat, see *Where to Put the Restraint* ⇨ *74*.

Uplevel Models

1. For forward-facing child restraints, attach and tighten the top tether to the top tether anchor, if your vehicle has one. Follow the child restraint instructions and the vehicle LATCH anchor weight limits described at the beginning of this section, and the following steps:
   - 1.1 Set/Place the child restraint on the seat cushion.
   - 1.2 Rotate the seatback forward. See *Rear Seats* ⇨ *48*.
   - 1.3 Route and attach the top tether according to your child restraint instructions and the following instructions:

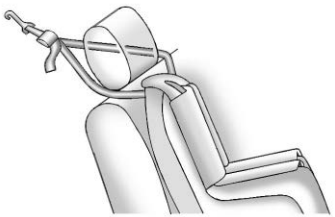

If the position you are using has an adjustable headrest or head restraint, adjust it accordingly to allow proper fitment. If you are using a dual tether, route the tether around the headrest or head restraint posts.

If the child restraint is installed next to a center seat, make sure the top tether does not interfere with the center seating position shoulder belt/retractor. If it does, find another suitable seating position to install the child restraint.

NOT FOR RESALE

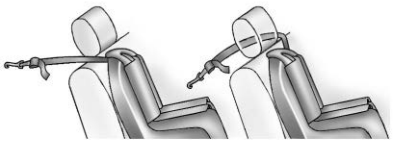

If the position you are using has an adjustable headrest or head restraint, adjust it accordingly to allow proper fitment. If you are using a single tether, route the tether. Make sure the top tether does not interfere with the center seating position shoulder belt/retractor.

2. Make sure the child restraint top tether hook is completely closed and secured to the top tether anchor.

   2.1 While pulling on the top tether strap to remove the slack, and keeping the child restraint in contact with the seat cushion and seatback, rotate the seatback to the latched position.

   2.2 All slack needs to be removed from the top tether before securing the seatback to the latches.

3. Raise the seatback. See *Rear Seats* ➪ *48*.

   3.1 Confirm the seatback is secure on the latches.

   3.2 Confirm the child restraint is contacting the seat cushion and seatback.

4. Attach and tighten the lower attachments to the lower anchors. If the child restraint does not have lower attachments or the desired seating position does not have lower anchors, secure the child restraint with the top tether and the seat belt. Refer to the child restraint manufacturer instructions and the instructions in this manual.

   4.1 Find the lower anchors for the desired seating position.

   4.2 Attach and tighten the lower attachments on the child restraint to the lower anchors.

5. Tighten the top tether.

6. Before placing a child in the child restraint, make sure it is securely held in place. To check, firmly grip the child restraint at the LATCH path and attempt to move it side to side and back and forth. There should be no more than 2.5 cm (1 in) of movement for proper installation.

Base Models

1. Attach and tighten the lower attachments to the lower anchors. If the child restraint does not have lower attachments or the desired seating position does not have lower anchors, secure the child restraint with the top tether and the seat belt. Refer to the child restraint manufacturer instructions and the instructions in this manual.

   1.1 Find the lower anchors for the desired seating position.

   1.2 Put the child restraint on the seat.

NOT FOR RESALE

1.3 Attach and tighten the lower attachments on the child restraint to the lower anchors.

2. For forward-facing child restraints, attach and tighten the top tether to the top tether anchor, if your vehicle has one. Follow the child restraint instructions and the vehicle LATCH anchor weight limits described at the beginning of this section, and the following steps:

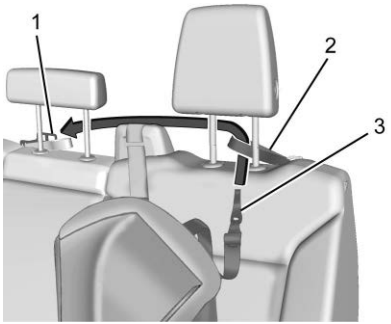

Rear Driver Side Position

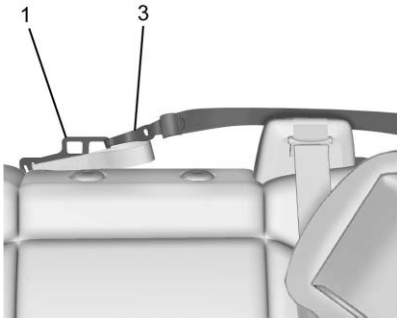

Rear Driver Side Position

2.1 For a top tether in the rear driver side position:

2.1.1 Remove the driver side head restraint and center headrest. See “Head Restraint or Headrest Removal and Reinstallation” later in this section.

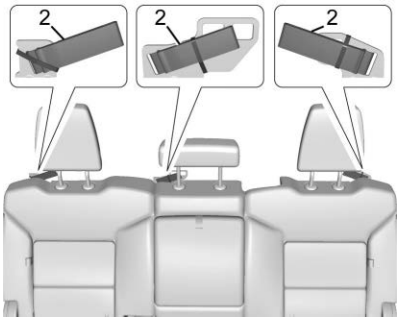

2.1.2 For first time use, remove and discard the rubber band from the top tether loop (2).

2.1.3 Route the top tether (3) through the loop (2).

2.1.4 Attach the top tether (3) to the driver side of the center top tether metal anchor (1).

2.1.5 Make sure the child restraint top tether hook is completely closed and secured to the top tether anchor.

NOT FOR RESALE

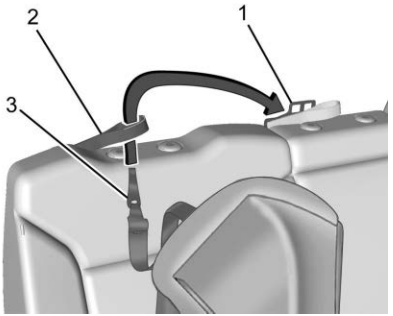

Rear Passenger Side Position

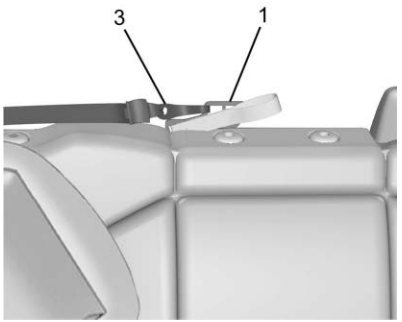

Rear Passenger Side Position

2.2 For a top tether in the rear passenger side position:

2.2.1 Remove the passenger side head restraint and center headrest. See "Head Restraint or Headrest Removal and Reinstallation" later in this section.

2.2.2 Route the top tether (3) through the loop (2).

2.2.3 Attach the top tether (3) to the passenger side of the center top tether metal anchor (1).

2.2.4 Make sure the child restraint top tether hook is completely closed and secured to the top tether anchor.

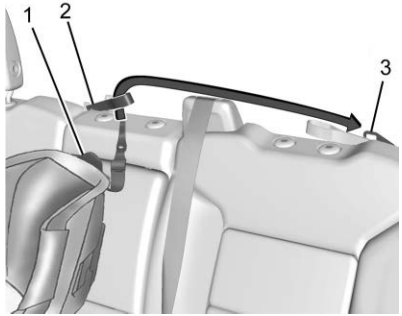

Rear Center Position

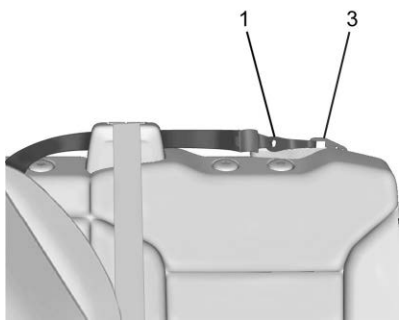

Rear Center Position

NOT FOR RESALE

2.3 For a top tether in the rear center position:

2.3.1 Remove the driver side head restraint and center headrest. See "Head Restraint or Headrest Removal and Reinstallation" later in this section.

2.3.2 Route the top tether (1) through the center loop (2).

2.3.3 Attach the top tether (1) to the driver side top tether metal anchor (3).

2.3.4 Make sure the child restraint top tether hook is completely closed and secured to the top tether anchor.

3. Tighten the top tether per the child restraint manufacturer's instructions.

   When the top tether is properly tightened, the loop may bend. This is normal and will not damage the vehicle.

   If child restraints are installed in both outboard positions, both top tethers can be attached to the center anchor. Top tethers can be attached for child restraints in all three rear seating positions at the same time, following the routing instructions above.

4. Before placing a child in the child restraint, make sure it is securely held in place. To check, firmly grip the child restraint at the LATCH path and attempt to move it side to side and back and forth. There should be no more than 2.5 cm (1 in) of movement for proper installation.

Head Restraint or Headrest Removal and Reinstallation

For base models, the second row outboard head restraints or center headrest can be removed if they interfere with the proper installation of the child restraint.

To remove the second row head restraints or center headrest:



1. Press both buttons on the head restraint or headrest posts at the same time, and pull up on the head restraint or headrest.
2. Store the head restraint or headrest in a secure place.
3. When the child restraint is removed, reinstall the head restraint or headrest before the seating position is used.

NOT FOR RESALE

Warning

With head restraints that are not installed and adjusted properly, there is a greater chance that occupants will suffer a neck/spinal injury in a crash. Do not drive until the head restraints for all occupants are installed and adjusted properly.

To reinstall the head restraint or headrest:



1. Insert the head restraint or headrest posts into the holes in the top of the seatback. The notches on the posts must face the driver side of the vehicle.
2. Push the head restraint or headrest down.
3. Try to move the head restraint or headrest to make sure that it is locked in place.

Replacing LATCH System Parts After a Crash

Warning

A crash can damage the LATCH system in the vehicle. A damaged LATCH system may not properly secure the child restraint, resulting in serious injury or even death in a crash. To help make sure the LATCH system is working properly after a crash, see your dealer to have the system inspected and any necessary replacements made as soon as possible.

If the vehicle has the LATCH system and it was being used during a crash, new LATCH system parts may be needed.

New parts and repairs may be necessary even if the LATCH system was not being used at the time of the crash.

Securing Child Restraints (With the Seat Belt in the Rear Seat)

When securing a child restraint with the seat belts in a rear seat position, study the instructions that came with the child restraint to make sure it is compatible with this vehicle.

If the child restraint has the LATCH system, see *Lower Anchors and Tethers for Children (LATCH System)* ⇨ 75 for how and where to install the child restraint using LATCH. If a child restraint is secured in the vehicle using a seat belt and it uses a top tether, see *Lower Anchors and Tethers for Children (LATCH System)* ⇨ 75 for top tether anchor locations.

Do not secure a child seat in a position without a top tether anchor if a national or local law requires that the top tether be anchored, or if the instructions that come with the child restraint say that the top strap must be anchored. Refer to the instructions that came with the child restraint and see *Lower Anchors and Tethers for Children (LATCH System)* ⇨ 75.

In Canada, the law requires that forward-facing child restraints have a top tether, and that the tether be attached.

NOT FOR RESALE

If the child restraint or vehicle seat position does not have the LATCH system, you will be using the seat belt to secure the child restraint. Be sure to follow the instructions that came with the child restraint.

If more than one child restraint needs to be installed in the rear seat, be sure to read *Where to Put the Restraint* ⇨ *74*.

Uplevel Models

1. For forward-facing child restraints, attach and tighten the top tether to the top tether anchor, if your vehicle has one.
   - 1.1 Place the child restraint on the seat cushion.
   - 1.2 Rotate the seatback forward. See *Rear Seats* ⇨ *48*.
   - 1.3 If the child restraint has a top tether, follow the child restraint manufacturer's instructions regarding the use of the top tether. See *Lower Anchors and Tethers for Children (LATCH System)* ⇨ *75* for more information on using the top tether anchors.
2. Pick up the latch plate and run the lap and shoulder portions of the vehicle seat belt through or around the child restraint. Ensure the seat belt webbing is routed as directly as possible and is not caught on seat handles or plastic trim. The child restraint instructions will show you how.



3. Push the latch plate into the buckle until it clicks.

   Position the release pushbutton on the buckle, away from the child restraint, so that the seat belt could be quickly unbuckled if necessary.



4. Pull the shoulder belt all the way out of the retractor to set the lock. When the retractor lock is set, the belt can be tightened but not pulled out of the retractor.

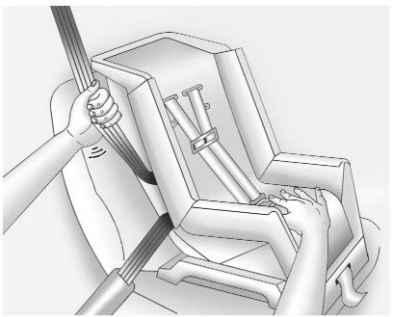

NOT FOR RESALE

5. To tighten the belt, push down on the child restraint, pull the shoulder portion of the belt to tighten the lap portion of the belt, and feed the shoulder belt back into the retractor. When installing a forward-facing child restraint, it may be helpful to use your knee to push down on the child restraint as you tighten the belt.

   There must not be direct contact of the child restraint to the buckle release pushbutton. If there is contact, reposition the child restraint using the instructions that came with the child restraint. If there is still contact, use another seating position or child restraint.

   Try to pull the belt out of the retractor to make sure the retractor is locked. If the retractor is not locked, repeat Steps 4 and 5.

6. Before placing a child in the child restraint, make sure it is securely held in place. To check, firmly grip the child restraint at the seat belt path and attempt to move it side to side and back and forth. When the child restraint is properly installed, there should be no more than 2.5 cm (1 in) of movement.

To remove the child restraint, unbuckle the vehicle seat belt and let it return to the stowed position. If the top tether is attached to a top tether anchor, disconnect it.

If the head restraint was removed, reinstall it before the seating position is used. See "Head Restraint Removal and Reinstallation" under *Lower Anchors and Tethers for Children (LATCH System)* ⇨ *75* for additional information on installing the head restraint properly.

Many child restraints are too wide to be correctly secured in the center rear seat, although some will fit there. If the center seat position is too narrow for the child restraint, secure it in a rear outboard seat position.

If a rear-facing child restraint is installed in the rear center seat, ensure that the second-row arm rest remains in the stowed (closed) position. If the arm rest cannot be stowed, or if the armrest can open fully, install the child restraint in another seating position.

Base Models

1. Put the child restraint on the seat.
2. If the head restraint interferes with the proper installation of the child restraint, the head restraint may be removed. See "Head Restraint Removal and Reinstallation" under *Lower Anchors and Tethers for Children (LATCH System)* ⇨ *75*.
3. Pick up the latch plate and run the lap and shoulder portions of the vehicle seat belt through or around the child restraint. Ensure the seat belt webbing is routed as directly as possible and is not caught on seat handles or plastic trim. The child restraint instructions will show you how.



4. Push the latch plate into the buckle until it clicks.

NOT FOR RESALE

Position the release pushbutton on the buckle, away from the child restraint, so that the seat belt could be quickly unbuckled if necessary.



5. Pull the shoulder belt all the way out of the retractor to set the lock. When the retractor lock is set, the belt can be tightened but not pulled out of the retractor.

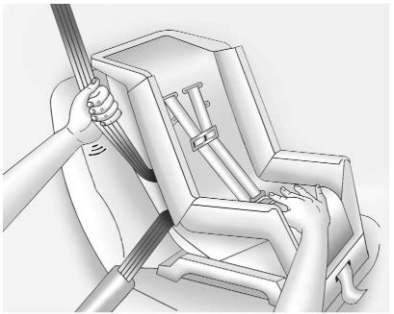

6. To tighten the belt, push down on the child restraint, pull the shoulder portion of the belt to tighten the lap portion of the belt, and feed the shoulder belt back into the retractor. When installing a forward-facing child restraint, it may be helpful to use your knee to push down on the child restraint as you tighten the belt.

   There must not be direct contact of the child restraint to the buckle release pushbutton. If there is contact, reposition the child restraint using the instructions that came with the child restraint. If there is still contact, use another seating position or child restraint.

   Try to pull the belt out of the retractor to make sure the retractor is locked. If the retractor is not locked, repeat Steps 5 and 6.

7. Tighten the top tether. See *Lower Anchors and Tethers for Children (LATCH System)* ⇨ 75.

8. If the child restraint has a top tether, follow the child restraint manufacturer's instructions regarding the use of the top tether. See *Lower Anchors and Tethers for Children (LATCH System)* ⇨ 75 for more information on using the top tether anchors.

9. Before placing a child in the child restraint, make sure it is securely held in place. To check, firmly grip the child restraint at the seat belt path and attempt to move it side to side and back and forth. When the child restraint is properly installed, there should be no more than 2.5 cm (1 in) of movement.

To remove the child restraint, unbuckle the vehicle seat belt and let it return to the stowed position. If the top tether is attached to a top tether anchor, disconnect it.

If the head restraint was removed, reinstall it before the seating position is used. See "Head Restraint Removal and Reinstallation" under

NOT FOR RESALE

Lower Anchors and Tethers for Children (LATCH System) ⇨ *75* for additional information on installing the head restraint properly.

Many child restraints are too wide to be correctly secured in the center rear seat, although some will fit there. If the center seat position is too narrow for the child restraint, secure it in a rear outboard seat position.

If a rear-facing child restraint is installed in the rear center seat, ensure that the second-row arm rest remains in the stowed (closed) position. If the arm rest cannot be stowed, or if the armrest can open fully, install the child restraint in another seating position.

Securing Child Restraints (With the Seat Belt in the Front Passenger Seat)

This vehicle has airbags.

A rear seat is a safer place to secure a forward-facing child restraint. See *Where to Put the Restraint* ⇨ *74*.

In addition, the vehicle has a passenger sensing system which is designed to turn off the front outboard passenger frontal airbag under certain conditions. See *Passenger Sensing System* ⇨ *63* and *Passenger Airbag Status Indicator* ⇨ *112* for more information, including important safety information.

Never put a rear-facing child restraint in the front. This is because the risk to the rear-facing child is so great, if the airbag deploys.

⚠ Warning

A child in a rear-facing child restraint can be seriously injured or killed if the front outboard passenger frontal airbag inflates. This is because the back of the rear-facing child restraint would be very close to the inflating airbag. A child in a forward-facing child restraint can be seriously injured or killed if the front outboard passenger frontal airbag inflates and the passenger seat is in a forward position.

Even if the passenger sensing system has turned off the front outboard passenger frontal airbag, no system is fail-safe. No one can guarantee that an airbag will not deploy under some unusual circumstance, even though it is turned off.

(Continued)

Warning (Continued)

Secure rear-facing child restraints in a rear seat, even if the airbag is off. If you secure a forward-facing child restraint in the front outboard passenger seat, always move the seat as far back as it will go. It is better to secure the child restraint in a rear seat.

See *Passenger Sensing System* ⇨ *63* for additional information.

If the child restraint uses a top tether, see *Lower Anchors and Tethers for Children (LATCH System)* ⇨ *75* for top tether anchor locations.

Do not secure a child seat in a position without a top tether anchor if a national or local law requires that the top tether be anchored, or if the instructions that come with the child restraint say that the top tether must be anchored.

In Canada, the law requires that forward-facing child restraints have a top tether, and that the tether be attached.

When using the lap-shoulder belt to secure the child restraint in this position, follow the instructions that came with the child restraint and the following instructions:

NOT FOR RESALE

1. Move the seat as far back as it will go before securing the forward-facing child restraint. Move the seat upward or the seatback to an upright position, if needed, to get a tight installation of the child restraint.

   When the passenger sensing system has turned off the front outboard passenger frontal airbag, the OFF indicator on the passenger airbag status indicator should light and stay lit when you start the vehicle. See *Passenger Airbag Status Indicator* ⇨ *112*.

2. Put the child restraint on the seat.
3. Pick up the latch plate and run the lap and shoulder portions of the vehicle seat belt through or around the restraint. Ensure the seat belt webbing is routed as direct as possible and is not caught on seat handles or plastic trim. The child restraint instructions will show you how.

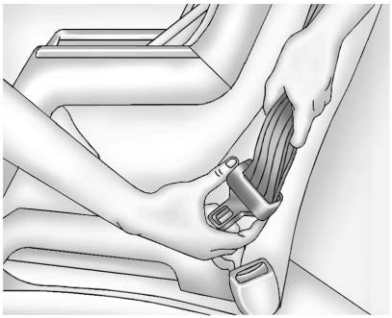

Tilt the latch plate to adjust the belt if needed.



4. Push the latch plate into the buckle until it clicks.

   Position the release pushbutton on the buckle, away from the child restraint, so that the seat belt could be quickly unbuckled if necessary.



5. Pull the shoulder belt all the way out of the retractor to set the lock. When the retractor lock is set, the belt can be tightened but not pulled out of the retractor.

NOT FOR RESALE

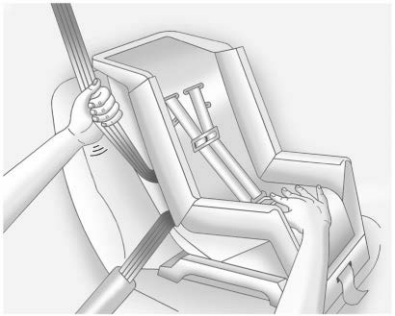

6. To tighten the belt, push down on the child restraint, pull the shoulder portion of the belt to tighten the lap portion of the belt, and feed the shoulder belt back into the retractor.

   When installing a forward-facing child restraint, it may be helpful to use your knee to push down on the child restraint as you tighten the belt.

   There must not be direct contact of the child restraint to the buckle release pushbutton. If there is contact, move the seat upward and repeat prior installation steps. If there is still contact, reposition the child restraint using the instructions that came with the child restraint. If there is still contact, use another seating position or child restraint.

   Try to pull the belt out of the retractor to make sure the retractor is locked. If the retractor is not locked, repeat Steps 5 and 6.

7. Before placing a child in the child restraint, make sure it is securely held in place. To check, firmly grip the child restraint at the seat belt path and attempt to move it side to side and back and forth. When the child restraint is properly installed, there should be no more than 2.5 cm (1 in) of movement.

If the airbag is off, the OFF indicator in the passenger airbag status indicator will come on and stay on when the vehicle is started.

If a child restraint has been installed and the ON indicator is lit, see “If the On Indicator Is Lit for a Child Restraint” under *Passenger Sensing System* ➪ *63*.

To remove the child restraint, unbuckle the vehicle seat belt and let it return to the stowed position.

NOT FOR RESALE

Storage

Storage Compartments
Storage Compartments 92
Glove Box 92
Cupholders 92
Underhood Storage (eTrunk) 92
Underseat Storage 93
Floor Console Storage 94
Luggage/Load Locations
Cargo Area 95
Additional Storage Features
Cargo Anchor Points 96

Storage Compartments

⚠ Warning

Do not store heavy or sharp objects in storage compartments. In a crash, these objects may cause the cover to open and could result in injury.

Glove Box



To open the glove box, pull the handle to the left. Use the mechanical key to lock or unlock. See *Keys* ⇨ *7*.

Cupholders

The front cupholders are in the center console.

Rear Seat Cupholders

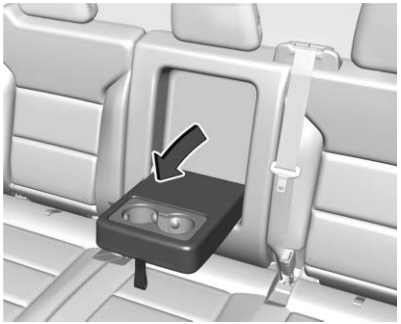

If equipped, lower the rear seat armrest to access the cupholders.

Underhood Storage (eTrunk)

There is storage in the front, under the hood. To access the eTrunk, open the hood. See *Hood* ⇨ *18*.

NOT FOR RESALE

⚠ Warning

The emergency hood release button inside the underhood compartment will not function when the battery is disconnected or depleted. To avoid personal injury or death, always keep the hood fully closed and latched when storing the vehicle. If the hood is not latched, a person could climb into the underhood compartment and inadvertently close the hood. People should never climb inside the underhood compartment. Never shut the hood when a person is inside.

Caution

When cleaning the eTrunk, do not get the exposed electrical components wet. This may damage the vehicle.

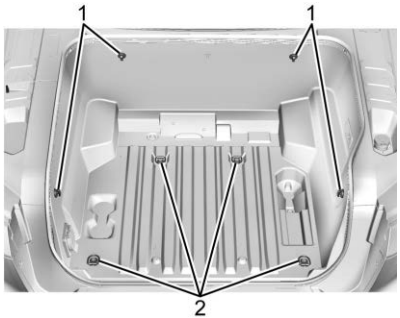

There are four hooks (1) for use with the convenience net, if equipped. The maximum load per hook is 30 kg (66 lbs).

There are also four cargo tie-downs (2) in the eTrunk. These can be used to strap cargo down and keep it from moving inside the vehicle. The maximum load per corner is 50 kg (110 lbs).

Underseat Storage

There may be storage under the rear passenger seat.

Base Level Underseat Storage

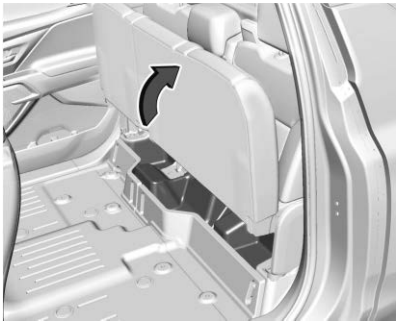

Lift up on the seat bench to access. Push the seat bench down to close.

NOT FOR RESALE

Uplevel Underseat Storage

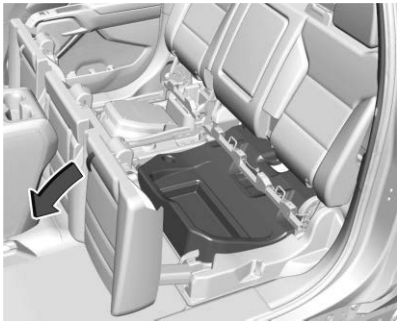

Pull the strap on the rear edge of the seat cushion to release. Tilt the seat cushion forward to access the storage. Rotate the seat bench rearward and push down to close.

Floor Console Storage

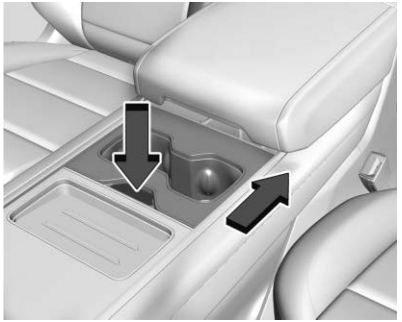

To access the floor console storage, press the cupholder button and slide the cupholders rearward.

To close, press the cupholder button and slide the cupholders forward.

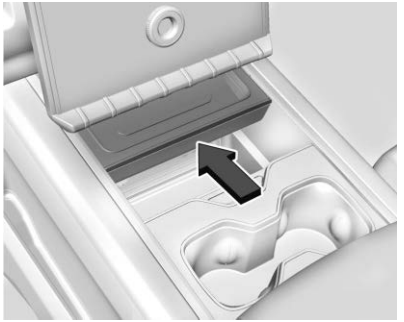

To access additional floor console storage, the USB port, and the auxiliary power outlet, slide the wireless charger forward until it stops, then release to lock it in place.

To close, slide the wireless charger forward again and release. The door will automatically close.

To access additional storage, remove the tray when the sliding wireless charger and cupholders are open.

NOT FOR RESALE

Luggage/Load Locations

Cargo Area

⚠ Warning

Rain and snow can cause the cargo box to become very slippery. Therefore, always remove snow and ice from your shoes and the cargo box, and be careful not to slip when getting in and out of the cargo box.

All-Weather Cargo Area

The vehicle's cargo area can be used in many different configurations — cargo panels on or off, midgate up or down, rear glass in or out. It has features that resist the elements and protect cargo. It is designed to quickly direct water out of the cargo box. The top drain grates and midgate drain help do this.

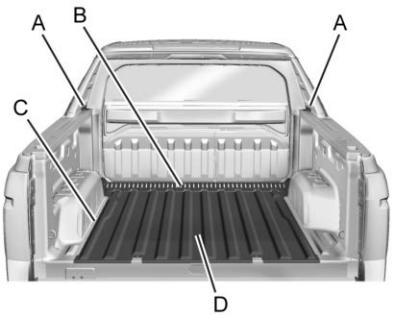

Even when all of these things are working properly and the cover system is on, there may be some instances (heavy rains, automated car washes, etc.) when water can collect in the following areas:

A. Top drain grates

B. Front drain grate (midgate drain grate)

C. Water drainage area around both sides of the box and the tailgate side

D. Cargo floor

Maintenance and Cleaning

To ensure that the water management system performs properly, be sure that the midgate, tailgate, and cover system are fully closed and that all parts are clean and not blocked with debris. Follow the instructions given next in this section for the proper procedures on cleaning each item.

Top Drain Grates Cleaning

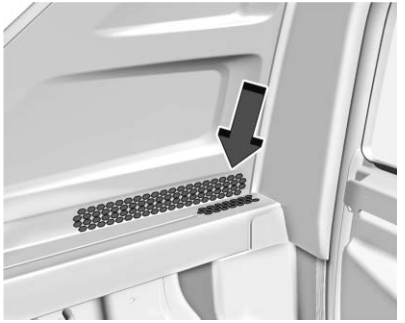

The top drain grates are located near the rear window on both sides of the vehicle. Clean the grates and drains if there is a blockage.

NOT FOR RESALE

Midgate Drain Grate Removal and Cleaning

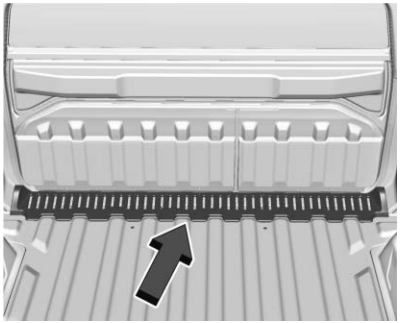

The midgate drain grate is located near the base of the midgate.

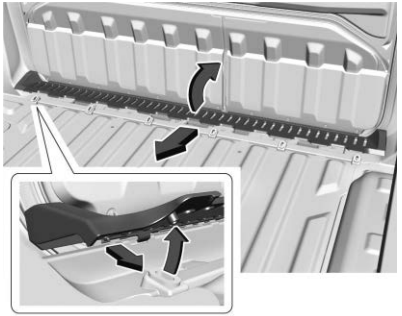

Keep the drain grate clean to avoid blocking the path of water to the gutter system. After hauling dirt, wood chips, pebbles, etc., check the midgate drain to ensure the drain path is clear. The drain grate can be removed and flushed with water if necessary.

To remove the drain grate:

1. Lower the midgate. See *Midgate* ⇨ *21* for more information.
2. Pull up on the rear side of the drain grate, tilt it toward the front of the vehicle, and pull it out.

Reverse the procedure to reinstall the drain grate.

Additional Storage Features

Cargo Anchor Points

Base Level Shown, Uplevel Similar

Caution
The truck bed walls will collapse if the tie-downs are overloaded.

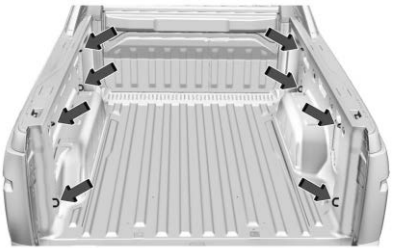

This vehicle is equipped with eight fixed cargo tie-downs.

Any of the eight locations inside the truck bed can be used. The maximum load per corner is 227 kg (500 lb).

NOT FOR RESALE

⚠ Warning

Do not pull on the sail panel while entering the cargo area. The sail panel is decorative and will not sustain any weight. The sail panel could break, and you could be seriously injured.

Caution

Placing tall or oversized items near or against the spoiler, midgate, or the lights above the rear window can result in vehicle damage. To prevent vehicle damage, properly store cargo in the truck bed away from the spoiler, midgate, and cargo lights using the cargo tie-downs.

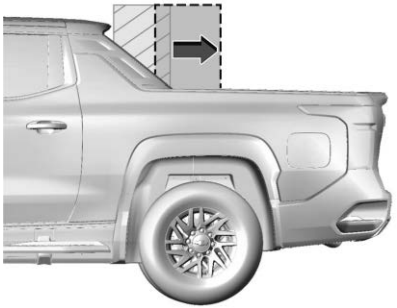

NOT FOR RESALE

Instructions and Controls

Controls

Steering Wheel Adjustment 99
Heated Steering Wheel 99
Horn 100
Pedestrian Safety Signal 100
Windshield Wiper/Washer 100
Clock 101
Power Outlets 101
Onboard Generator 103
Wireless Charging 105
On-Screen Controls 107

Warning Lights, Gauges, and Indicators

Warning Lights, Gauges, and Indicators ..107
Instrument Cluster 108
Speedometer 109
Odometer 109
Trip Odometer 109
Battery Gauge (High Voltage) 109
Power Indicator Gauge 110
Seat Belt Reminders 111
Airbag Readiness Light 112
Passenger Airbag Status Indicator 112
Charging System Light (12-volt Battery) ... 113
Low State of Charge Light 113
Charge Cord Connected Light 113
Battery Fault Light 114
Propulsion Power is Limited Light 114
Service Vehicle Soon Light (Propulsion System Failure) 114
Brake System Warning Light 114
Electric Parking Brake Light 115
Service Electric Parking Brake Light 115
Antilock Brake System (ABS) Warning Light 115
Service Four-Wheel Drive Warning Light 116
Automatic Vehicle Hold (AVH) Light 116
Lane Keep Assist (LKA) Light 116
Hands-On Steering Assist Light (Lane Centering Assistance) 116
Automatic Emergency Braking (AEB) Disabled Light 117
Vehicle Ahead Indicator 117
Pedestrian Ahead Indicator 117
Traction Off Light 117
Traction Control System (TCS)/ Electronic Stability Control Light 118
Electronic Stability Control (ESC) Off Light 118
Driver Mode Control Light 118
Four-Wheel Steering Light 119
Air Suspension Light 119
Tire Pressure Light 120
Security Light 120
Vehicle Ready Light 120
High-Beam On Light 121
Front Fog Light Indicator 121
Lights On Reminder 121
Cruise Control Light 121
Adaptive Cruise Control Light 121
Super Cruise Light 122
Door Ajar Light 122

Information Displays

Charging 122
Driver Information Center (DIC) 127
Vehicle Status 129
Head-Up Display (HUD) 131

Vehicle Messages

Vehicle Messages 132
Propulsion Power Messages 133
Vehicle Speed Messages 133

Universal Remote System

Universal Remote System Programming (Garage Door Opener) 133
Universal Remote System Operation (Garage Door Opener) 135

NOT FOR RESALE

Controls

Steering Wheel Adjustment

Power Tilt and Telescoping Steering Wheel

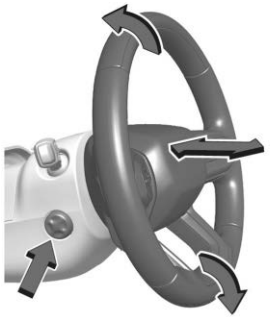

To adjust the steering wheel, if equipped:

1. Press the control up or down to tilt the steering wheel up or down.
2. Press the control rearward or forward to move the steering wheel closer or away from you.

Manual Steering Wheel



To adjust the steering wheel, if equipped:

1. Pull the lever down.
2. Move the steering wheel up or down.
3. Pull the lever up to lock the steering wheel in place.

Do not adjust the steering wheel while driving.

Heated Steering Wheel

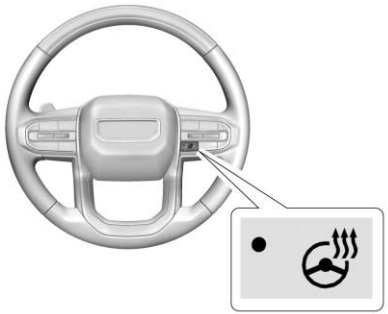

: Press to turn the heated steering wheel on or off. An indicator is lit when the feature is turned on.

The steering wheel takes about three minutes to start heating.

Automatic Heated Steering Wheel

The heated steering wheel may turn on during a remote start along with the heated seats when it is cold outside. The heated steering wheel indicator may come on in remote start.

NOT FOR RESALE

The heated steering wheel will turn on when the auto heated seat is activated. The heated steering wheel indicator will display the state of the steering wheel heat.

See *Heated and Ventilated Front Seats* ⇨ *46*.

To turn this feature on or off, select Settings > Vehicle > Comfort and Convenience > Heated Steering Wheel > Select ON or OFF.

Horn

To sound the horn, press on the steering wheel.

Pedestrian Safety Signal

The vehicle is equipped with automatic sound generation. The automatic sound is generated to indicate the vehicle presence to pedestrians. The sound changes if the vehicle is speeding up or slowing down. It is activated when the vehicle is driving or shifted into a forward gear, N (Neutral), or R (Reverse), up to driving speeds of 25 km/h (15 mph) or 35 km/h (22 mph), depending on region of sale.

Windshield Wiper/Washer

⚠ Warning

In freezing weather, do not use the washer until the windshield is warmed. Otherwise the washer fluid can form ice on the windshield, blocking your vision.

⚠ Warning

Before driving the vehicle, always clear snow and ice from the hood, windshield, washer nozzles, roof, and rear of the vehicle, including all lights and windows. Reduced visibility from snow and ice buildup could lead to a crash.



The windshield wiper/washer lever is on the left side of the steering column. With the vehicle on or in accessory mode, turn the windshield wiper band to select the wiper speed.

HI: Use for fast wipes.

LO: Use for slow wipes.



INT: Turn the band to INT for intermittent wipes, then turn the INT band up for more frequent wipes or down for less frequent wipes.

OFF: Use to turn the wipers off.

: For a single wipe, push the button to the first stop position briefly and release. For several wipes, hold the button at the first stop position longer and release.

: Push the button beyond the first stop position to spray windshield washer fluid and activate the wipers. The wipers will continue until the button is released or the maximum wash time is reached. When the windshield

NOT FOR RESALE

wiper button is released, additional wipes may occur depending on how long the windshield washer has been activated. See *Washer Fluid* ⇨ *309* for information on filling the windshield washer fluid reservoir.

Clear snow and ice from the entire windshield and wiper blades before using them. If frozen to the windshield, carefully loosen or thaw them. Damaged blades should be replaced. See *Wiper Blade Replacement* ⇨ *314*.

Heavy snow or ice can overload the wiper motor.

Wiper Parking

If the vehicle is turned off while the wipers are on LO, HI, or INT, they will immediately stop.

If the windshield wiper band is then moved to OFF before the driver door is opened or within 10 minutes, the wipers will restart and move to the base of the windshield.

If the vehicle is turned off while the wipers are performing wipes due to windshield washing, the wipers continue to run until they reach the base of the windshield.

Heated Wiper Parking

If equipped, this feature warms the lower area of the windshield where the wiper blades park when the rear window defogger is on, helping to remove frost from the wipers.

: The rear window defogger button is on the climate control panel.

See “Rear Window Defogger” under *Dual Automatic Climate Control System* ⇨ *171*.

Rain Sense

If equipped with Rain Sense and the feature is turned on, a sensor near the top center of the windshield detects the amount of water on the windshield and controls the frequency of the windshield wiper based on the current sensitivity setting.

Keep this area of the windshield clear of debris to allow for best system performance.

To turn the Rain Sense feature on or off, from the infotainment home screen, select Settings > Vehicle > Comfort and Convenience > Rain Sense > Enable/Disable.

If Rain Sense is enabled in Settings, turning the wiper lever to INT will activate Rain Sense.

Clock

Set the time and date using the infotainment system. See "Date/Time" under *Settings* ⇨ *162*.

Power Outlets

Power Outlets 12-Volt Direct Current

Caution

Leaving electrical equipment plugged in for an extended period of time while the vehicle is off will drain the battery. Always unplug electrical equipment when not in use and do not plug in equipment that exceeds the maximum 15 amp rating.

Caution

Hanging heavy equipment from the power outlet can cause damage not covered by the vehicle warranty. The power outlets are designed for accessory power plugs only, such as cell phone charge cords.

The vehicle has one 12-volt outlet that can be used to plug in electrical equipment.

NOT FOR RESALE

Lift the cover to access the outlet and replace when not in use.

The power outlet is located underneath the temperature controls.

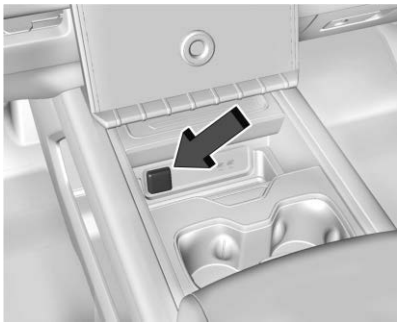

Front Console 12–Volt Power Outlet

Certain accessory plugs may not be compatible with the accessory power outlet and could overload vehicle and adapter fuses. If a problem is experienced, see your dealer.

When adding electrical equipment, be sure to follow the proper installation instructions included with the equipment. See *Add-On Electrical Equipment* ⇨ *299*.

Power Outlets 110/120 Volt Alternating Current

The vehicle has 110/120/240 Volt Alternating Current outlets. The 240 Volt outlet is located in the truck bed.

Lift the cover to access and replace when not in use.

The power outlets are located (400w option shown, 2.4kW similar):

- On the rear of the center console
- In the truck bed
- In the eTrunk

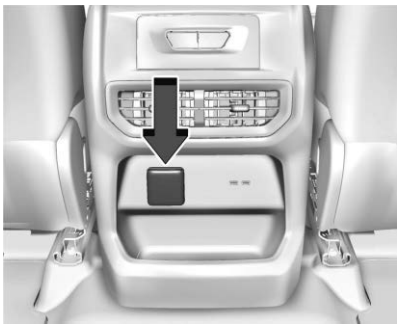

Rear of Center Console Power Outlet



Truck Bed Power Outlet

If equipped with PowerBase system, there will be three outlet covers in this location.

Underneath each cover is the following:

- 2x 120V outlets
- 2x 120V outlets
- 1x 240v outlet

NOT FOR RESALE



eTrunk Power Outlet

When the vehicle is on, power to the outlets is enabled. Power is supplied to the outlet when electrical equipment is plugged into that outlet. One power outlet can be used with electrical equipment up to a maximum of 400 watts (if equipped with PowerBase, up to 2.4kW on 120V outlets, up to 7.2kW on 240V outlet). Ensure that all connected devices do not exceed maximum wattage.

The outlet does not operate while the vehicle is starting. If a USB powered streaming device is being used, it is suggested to use a USB Port for power, see *USB Port* ⇨ *151*.

If equipment is connected using more than maximum allowed wattage or a system fault is detected, a protection circuit shuts off the power supply and the indicator light will flash.

Do not use a power outlet with a missing or damaged cover.

The power outlet is not designed for the following, and may not work properly if they are plugged in:

- Equipment with high initial peak wattage, such as compressor-driven refrigerators and electric power tools
- Other equipment requiring an extremely stable power supply, such as microcomputer-controlled electric blankets and touch sensor lights
- Medical equipment

Onboard Generator

⚠ Warning

Do not connect any vehicle power outlets to a building's electrical system. This can create a back feed to utility lines. This may

(Continued)

Warning (Continued)

result in damages not covered by vehicle warranty such as vehicle damage, property damage, fire, electrical shock, or death.

⚠ Warning

Using a damaged power outlet could result in electrical shock causing personal injury or death. Inspect the power outlet for damage before use and do not use the outlet if it is damaged.

⚠ Warning

Do not use a power supply or corded equipment that has been damaged or modified. Damaged or modified products may exhibit unpredictable behavior resulting in fire, explosion, or risk of injury.

NOT FOR RESALE

⚠ Warning

The power outlets contain high-voltage electrical equipment. Disassembling the power outlets may result in electrical shock causing personal injury or death. Never attempt to disassemble a power outlet.

⚠ Warning

High-power devices may cause plugs and cords to get hot after extended use. Contact with metal prongs or terminals could burn you. Use caution when unplugging cords, and avoid touching the metal prongs or terminals.

Caution

Excessive water or moisture can damage the power outlet. Do not aim power washers, water hoses, or high-powered spray nozzles directly at the power outlets.

If equipped and enabled, the vehicle outlets can be used to power compatible devices up to 7.2 kW. The power outlets are located in the cabin, bed, and eTrunk. See *Power Outlets* ⇨ *101*.



Do not use the system to power a towed item while the vehicle is in motion.

Close all outlet covers when not in use.

Status Indicator

The power outlet green indicator light displays the system status:

- A steady green light displays when the power outlet is working.
- No green light displays when the power outlet is off.

Make sure each device, or combination of devices, does not exceed the available power for the system.

Fault Mode

⚠ Warning

Do not short circuit AC outputs. A short-circuited power supply may cause fire, personal injury, and power supply damage. A power supply will short circuit if a metal object makes a connection between the line and the neutral terminals or between two energized lines of the AC outputs. Do not place a power supply near anything that could cause a short circuit.

The power outlet will turn off if the connected device exceeds the capacity for the outlet or total system. To troubleshoot fault mode, follow the steps below:

1. Unplug the device(s) from the outlet(s).
2. Check the vehicle display for information about the fault.
3. Check the two circuit breakers located near the power outlets in the bed of the vehicle.

NOT FOR RESALE

4. If these are not tripped, press the red reset button also located near the power outlets in the bed of the vehicle.

If a fault continues to occur, the device may be exceeding the power outlet power limit, or have excessive current leakage.

Switching the Outlets On and Off

Caution

Outlets power up during remote start. Do not keep electrical devices plugged in when not in use. This could result in an electrical overload that may cause damage to the system.

The outlets will always be ready for use when the vehicle is on. Using the power outlets while the vehicle is charging can increase charge time.

To enable the power outlets when the vehicle is off, use the settings in the infotainment screen before turning the vehicle off.

Troubleshooting

⚠ Warning

Exceeding the power supply's listed capacity may damage the power supply and/or any connected electrical devices. Corded equipment, including those with high initial draws, may require more power than the supply is capable of providing. Check the external equipment requirements before connecting to the supply to avoid damage or personal injury. Some tools with high initial electrical power draws, such as large or older saws and air compressors, may exceed the system inverter's capability, even if the device is rated less than 20 amps.

The power outlets will be momentarily unavailable at the start and the end of a 350 kW DC Fast Charge. This is normal operation.

Power availability may be limited during extreme hot or cold temperatures to optimize system performance.

If a connected device does not operate, use other devices to test system functionality. If other devices can be powered, the issue may be with the device in question.

For any error messages that can not be resolved by resetting fault mode as discussed earlier in this section, see your dealer.

Wireless Charging

⚠ Warning

Wireless charging may affect the operation of an implanted pacemaker or other medical devices. If you have one, it is recommended to consult with your doctor before using the wireless charging system.

⚠ Warning

Always keep the wireless charging surface and the back of the phone case clear of coins, keys, rings, paper clips, cards and other objects. The system may not detect the presence of these objects, which could

(Continued)

NOT FOR RESALE

Warning (Continued)

become very hot and cause burns. Remove the phone and allow to cool completely before handling.

Caution

Vehicle key cards, credit cards, hotel key cards, and other Near Field Communication (NFC) cards may be damaged if placed on the charging surface.

If equipped and enabled, the vehicle has wireless charging on the floor console sliding tray. The system operates at 127.7 kHz and can charge one Qi 1.x compatible smartphone per charger at a rate of up to 3 amp (15 W).

To begin charging, the vehicle must be on or Retained Accessory Power must be active. The wireless charging feature may not correctly indicate charging when the vehicle is in Retained Accessory Power, during a Bluetooth phone call, or when phone projection is active. See *Power Modes* ⇨ *196*.

The operating temperature is −40 °C (−40 °F) to 85 °C (185 °F) for the charging system and 0 °C (32 °F) to 35 °C (95 °F) for the phone. An alert will display on the infotainment screen if the wireless charger or smartphone are outside of normal operating temperature. Charging will automatically resume when a normal operating temperature is reached.

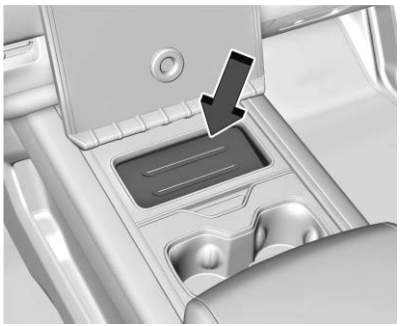

Wireless Charger

To charge a compatible smartphone:

1. Remove all objects from the charging area. The system may not charge if there are any objects between the smartphone and charger.
2. Place the smartphone face up against the rear of the charging area on the two horizontal rubber strips along the rear of the bin.

   To maximize the charge rate, ensure the smartphone is positioned flat, fully seated and centered in the holder with nothing under it.

   Do not allow the smartphone's camera protrusion to rest on the raised ribs of the charging surface, as this will interfere with alignment and reduce charging capability.

   A smartphone case may prevent the charger from working, or reduce the charging performance. Be sure the smartphone case is compatible with wireless charging and the back side of the phone is clear of cards and metal objects.
3. A green ⚡ appears on the infotainment display when the smartphone is detected. It will remain on while the smartphone is charging.

The smartphone may become warm during charging. This is normal. In warmer temperatures, your phone may take longer

NOT FOR RESALE

to charge. While charging the smartphone, pushing the sliding tray forward under the display may result in improved charging.

Troubleshooting Wireless Charging

If a smartphone is placed on the charger and turns off or appears, remove the smartphone and any objects from the charging area. Turn the smartphone 180 degrees and wait a few seconds before placing/aligning it again. If persists, the phone may not be compatible. will also display when objects other than phones are detected in the charging area.

If a smartphone is placed on the charger and appears, the charger and/or the smartphone is overheated. Remove the smartphone and any objects from the charger in order to cool the system.

Certain vehicle and smartphone accessories may not be compatible with the wireless charging system. See your dealer for additional information.

On-Screen Controls

The Controls App organizes the on-screen controls for many vehicle functions on one screen. The specific controls available in the app vary by model.

To access the Controls App, select the Controls icon from the infotainment home screen.

Warning Lights, Gauges, and Indicators

Warning lights, gauges, and indicators can alert you to an issue with your vehicle. Some warning lights display briefly to show that they are working when you start the vehicle. However, if a warning light persists while driving, or if a gauge shows there may be a problem, be sure to refer to the sections under "Warning Lights, Gauges, and Indicators."

Paying attention to your vehicle's warning lights, gauges, and indicators and promptly addressing any issues may help you to prevent an expensive repair or personal injury. Postponing repairs can be costly and even dangerous.

NOT FOR RESALE

Instrument Cluster

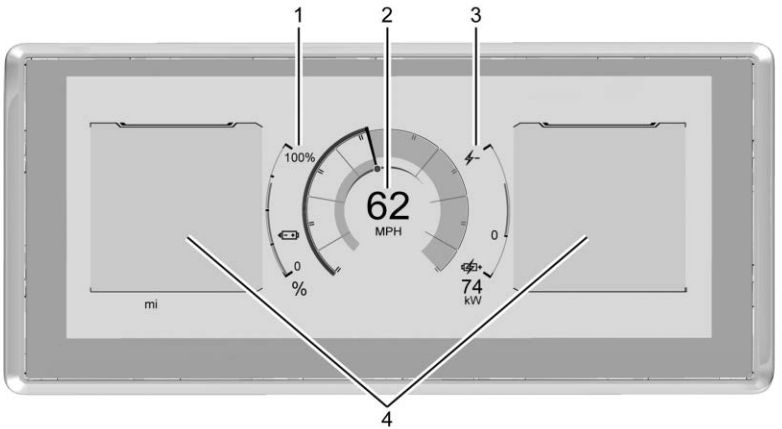

English Single Gauge Layout Shown, Other Layouts, and Metric Similar

1. Battery Gauge. See *Battery Gauge (High Voltage)* ⇨ *109*.
2. Speedometer. See *Speedometer* ⇨ *109*.
3. Power Indicator Gauge. See *Power Indicator Gauge* ⇨ *110*.
4. Driver Information Center. See *Driver Information Center (DIC)* ⇨ *127*.

Reconfigurable Instrument Cluster

The cluster display layout can be changed. Some of the selectable views may not be available for your particular vehicle.

The following are selectable views:

Clean: If equipped, displays no information zones.

Single Gauge: Displays two information zones that are located to the left and right of the speedometer.

Dual Gauge: If equipped, displays the battery gauge and power indicator gauge to the left and right of the information zone.

Map: Displays a navigation map.

Driver Assistance: If equipped, displays information for Adaptive Cruise Control, Follow Distance, Lane Keep Assist, Forward Collision Alert, Hands-On Steering Assist (Lane Centering Assistance), and Super Cruise. There is one information zone to the right of the display.

Off Road: If equipped, displays vehicle pitch and roll information, and road wheel angle.

NOT FOR RESALE

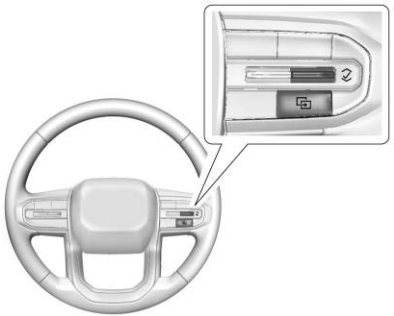

Use the right steering wheel control to open and scroll through the different items and displays.

To change the cluster configuration, press on the right steering wheel control.

If equipped, to change the gauge faces, press and hold and use ∧ or ∨ on the right steering wheel control. Press ✓ on the right steering wheel control to select the desired option from the list.

Display Settings

Turn the following options on or off using the infotainment display. Some may not be available for your vehicle. See *Settings* ⇨ *162*.

Speed Sign

Shows sign information from a roadway database in the onboard navigation. The sign will show "– –" when there is no detected speed limit or the system is unavailable.

Turn-by-Turn Graphics

Provides Turn-by-Turn navigation graphics during an active route in your driver display.

Traffic Sign Recognition

Displays the detected speed limit in your driver display. See *Traffic Sign Assistant* ⇨ *276*.

Speedometer

The speedometer shows the vehicle speed in either kilometers per hour (km/h) or miles per hour (mph).

Odometer

The odometer displays the distance the vehicle has been driven, in either kilometers or miles.

Trip Odometer

The trip odometer displays the distance the vehicle was driven since the trip odometer was last reset.

Access and reset the trip odometer through the Vehicle Status. See *Vehicle Status* ⇨ *129*.

Battery Gauge (High Voltage)

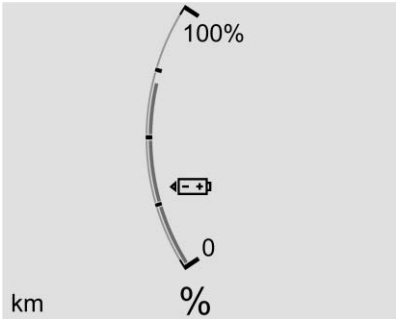

Metric Single Battery Gauge Shown, Others Similar

NOT FOR RESALE

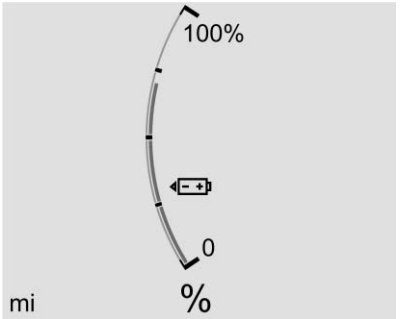

English Single Battery Gauge Shown, Others Similar

This displays the high voltage battery state of charge. The value at the bottom is an estimate of how far the vehicle can be driven on the remaining charge based on recent driving habits, conditions, and HVAC usage.

The fill bars shown inside of the gauge indicate the percentage range as estimated from current vehicle conditions and climate settings. The range estimate may be affected by climate settings, current vehicle conditions, and ambient conditions. Estimated range may increase and decrease based on climate control energy consumption.

Driving aggressively through hard acceleration and/or braking events, excessive HVAC usage, using heated or cooled seats, battery preconditioning, and performance modes can affect vehicle range estimates.

When the high voltage battery state of charge level gets low, the gauge will change color to amber. When the charge is very low, the estimated range value will change to LOW. Additional alerts may display and a sound may also be heard at low state of charge.

Power Indicator Gauge

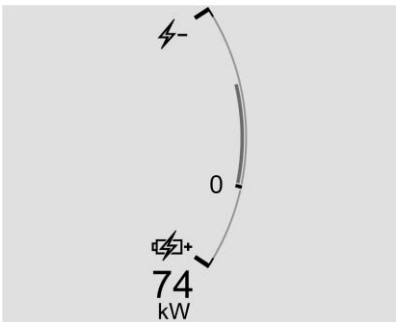

Single Power Indicator Gauge Shown, Others Similar

The power indicator gauge is in the center of the display to the right of the speedometer in the Single Gauge layout.

This gauge displays the instantaneous charge and consumption power of the high voltage battery. Maximum power consumption is available when the high voltage battery is fully charged. During normal operation, a slight reduction in consumption power may occur as the high voltage battery state of charge decreases.

Regenerative Braking

When regenerative braking is active, the regen battery icon displays and will fill the lower section of the gauge. The power indicator gauge value shows the amount of instantaneous power being regenerated.

Regenerative Power Limited

Regenerative power may be limited when the high voltage battery is near full charge or cold. This will affect the vehicle's maximum regenerative braking power.

NOT FOR RESALE

Seat Belt Reminders

Driver Seat Belt Reminder Light

There is a driver seat belt reminder light on the instrument cluster.



When the vehicle is started, or if the driver remains or becomes unbuckled while the vehicle is moving, this light flashes and an audible alert sounds to alert the driver to fasten their seat belt. The light may then display solid until the driver seat belt is buckled. This cycle may continue several times or continuously until the driver seat belt is buckled. If the driver seat belt is buckled, the light will not display and audible alert will not sound.

Front Passenger Seat Belt Reminder Light

This vehicle may have a front passenger seat belt reminder light near the passenger airbag status indicator. See *Passenger Sensing System* ⇨ *63*.



When the vehicle is started, or if the front passenger remains or becomes unbuckled while the vehicle is moving, this light flashes and an audible alert may sound to alert the front passenger to fasten their seat belt. The light may then display solid until the front passenger seat belt is buckled. This cycle may continue several times or continuously until the front passenger seat belt is buckled. If the front passenger seat belt is buckled, the light will not display and the audible alert will not sound.

Alerts may occur if an object, such as a briefcase, handbag, grocery bag, laptop, or other electronic device, is on the front passenger seat. To turn off the reminder light and/or audible alert, remove the object from the seat or buckle the seat belt.

Second Row Passenger Seat Belt Reminder Lights

This vehicle may have second row passenger seat belt reminder lights. The vehicle has one of the following displays.



- A shaded or green light indicates the seat belt is buckled.



- An ✕ indicates the seat belt is not buckled.

  A ✓ indicates the seat belt is buckled.

  For information on the front seat belt reminder lights, see "Driver Seat Belt Reminder Light" and "Front Passenger Seat Belt Reminder Light" listed previously.

NOT FOR RESALE

When the vehicle is started and not moving, and if a rear passenger has not buckled their seat belt, the light will display solid. If a rear passenger remains or becomes unbuckled while the vehicle is moving, this light may flash and an audible alert may sound to alert the driver that a rear passenger needs to fasten their seat belt.

Alerts may occur if an object, such as a briefcase, handbag, grocery bag, laptop, or other electronic device, is on the rear passenger seats. To turn off the reminder light and/or audible alert, remove the object from the seat or buckle the seat belt.

Airbag Readiness Light

⚠ Warning

If the airbag readiness light stays on after the vehicle is started or comes on while driving, it means the airbag system might not be working properly. The airbags in the vehicle might not inflate in a crash, or they could even inflate without a crash. To help avoid injury, have the vehicle serviced right away.

This light shows if there is an electrical problem with the airbag system. It is located in the instrument cluster. The system check includes the airbag sensor(s), the passenger sensing system, the pretensioners, the airbag modules, the wiring, and the crash sensing and diagnostic module. For more information on the airbag system, see *Airbag System* ⇨ *58*.



The airbag readiness light comes on for several seconds when the vehicle is started. If the light does not come on then, have it fixed immediately.

If there is a problem with the airbag system, a Driver Information Center (DIC) message may also come on.

Passenger Airbag Status Indicator

⚠ Warning

If the airbag readiness light ever comes on and stays on, it means that something may be wrong with the airbag system. To help avoid injury to yourself or others, have the vehicle serviced right away. See *Airbag Readiness Light* ⇨ *112* for more information, including important safety information.

The vehicle has a passenger sensing system. See *Passenger Sensing System* ⇨ *63* for important safety information. The overhead console has a passenger airbag status indicator.



The passenger airbag status indicator may include text and/or symbols to indicate the passenger frontal airbag is either On or Off.

NOT FOR RESALE

When the vehicle is started, the passenger airbag status indicator will light both the On and Off indicators for several seconds as a system check.

Then, after several more seconds, the passenger airbag status indicator for either On or Off will be lit to let you know the status of the front outboard passenger frontal airbag.

If the status indicator for On is lit on the passenger airbag status indicator, it means that the front outboard passenger frontal airbag is allowed to inflate.

If the status indicator for Off is lit on the passenger airbag status indicator, it means that the passenger sensing system has turned off the front outboard passenger frontal airbag.

If after several seconds both status indicator lights remain on, or if there are no lights at all, or if the airbag readiness light is on, there may be a problem with the lights or the passenger sensing system. See your dealer for service right away.

Charging System Light (12-volt Battery)

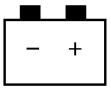

This light displays briefly when you start your vehicle. This is a normal test your vehicle runs on start up.

If the light stays on or displays while driving, there could be a problem with the electrical charging system. Have it checked by your dealer. Driving while this light is on could drain the 12-volt battery.

If you must drive a short distance with the light on, turn off all accessories, such as the radio, to save battery power. Find a safe place to stop the vehicle.

Low State of Charge Light

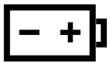

This light displays amber when the vehicle state of charge is low. Proceed to a charging station to charge the vehicle.

Charge Cord Connected Light



This light displays when a charge cord is connected to the vehicle.

NOT FOR RESALE

Charge Cord Connected and Locked Light



If equipped, this light displays when a charge cord is connected and locked to the vehicle.

Battery Fault Light



This light displays when there is a fault with the high voltage battery. A message may also display in the Driver Information Center. See your dealer for service.

Propulsion Power is Limited Light





These lights display when vehicle propulsion power is limited. The vehicle is drivable, but the ability to accelerate the vehicle may be reduced.

Service Vehicle Soon Light (Propulsion System Failure)



This light displays to indicate there may be an issue with your vehicle. See your dealer for service as soon as possible.

Brake System Warning Light





Metric **English**

⚠ Warning

The brake system might not be working properly if the brake system warning light is on. Driving with the brake system warning light on can lead to a crash. If the light is still on after the vehicle has been pulled off the road and carefully stopped, have the vehicle towed for service.

This light displays briefly when you start your vehicle. This is a normal test your vehicle runs on startup. If it does not display, see your dealer for service.

If the light stays on, have the brake system inspected immediately. This light may display if the brake fluid is low. See *Brake Fluid* ⇨ *310*.

NOT FOR RESALE

If the light displays while driving, pull off the road and stop carefully. The brake system has electric brake boost. Vehicle speed may be limited when the brake system warning light displays. The brake pedal might be harder to push, or the brake pedal may go closer to the floor. It could take longer to stop. If the light is still on, have the vehicle towed for service. See *Transporting a Disabled Vehicle* ⇨ *363*.

Electric Parking Brake Light



Metric **English**

This light displays when the Electric Parking Brake is applied. If the light flashes after the Electric Parking Brake is released, or while driving, there is a problem with the Electric Parking Brake system. A message may also display in the Driver Information Center.

If the light does not display, or remains flashing, see your dealer.

Service Electric Parking Brake Light



This light may display briefly when you start your vehicle. This is a normal test your vehicle runs on start up. If it does not display, see your dealer for service.

If this light stays on or displays while driving, there is a problem with the electric parking brake. Take the vehicle to a dealer as soon as possible. In addition to the parking brake, other safety functions that use the electric parking brake may also be affected. A message may also display in the Driver Information Center. See *Electric Parking Brake* ⇨ *202*.

Antilock Brake System (ABS) Warning Light



This light displays briefly when you start your vehicle. This is a normal test your vehicle runs on start up. If it does not display, see your dealer for service.

When the Antilock Brake System (ABS) detects a problem, the warning light displays and stays on, and you may hear an audible alert. Your vehicle brakes will still function, but your Antilock Brake System (ABS) is not functioning as expected. See your dealer for service.

If this warning light and the brake system warning light are displayed, your Antilock Brake System (ABS) and your regular brakes are not functioning as expected. See your dealer for service.

See *Brake System Warning Light* ⇨ *114*.

NOT FOR RESALE

Service Four-Wheel Drive Warning Light

eAWD

This light displays amber when the Electric Four-Wheel Drive System is limited, and will turn off when the system is working normally.

If this light displays red, there may be a malfunction. See your dealer.

See *Four-Wheel Drive* ⇨ *201*.

Automatic Vehicle Hold (AVH) Light

AUTO HOLD

If equipped, this light displays when Automatic Vehicle Hold is enabled and turns green when Automatic Vehicle Hold is actively holding the vehicle. See *Automatic Vehicle Hold (AVH)* ⇨ *204*.

Lane Keep Assist (LKA) Light



If equipped, the Lane Keep Assist Light may display the following colors:

- White: Displays when the vehicle starts. A steady white light indicates that Lane Keep Assist is unable to assist.
- Green: Displays when Lane Keep Assist is turned on and ready to assist. Lane Keep Assist will gently turn the steering wheel if the vehicle approaches a detected lane marking.
- Amber: Displays when Lane Keep Assist is active. The light flashes amber as a Lane Departure Warning alert indicating that a lane marking has been unintentionally crossed. If the system detects you are steering intentionally (to pass or change lanes), the Lane Departure Warning alert may not display. If equipped, the amber light also displays when the Blind Zone Steering Assist detects a potential crash with a moving vehicle in the lane you are entering. See *Blind Zone Steering Assist (BZSA)* ⇨ *275*.

Lane Keep Assist will not assist or alert if the turn signal is active in the direction of lane departure, or if Lane Keep Assist detects that you are accelerating, braking, or actively steering. See *Lane Keep Assist (LKA)* ⇨ *279*.

Hands-On Steering Assist Light (Lane Centering Assistance)



If equipped, this light displays the Hands-On Steering Assistance status.

NOT FOR RESALE



If equipped, this light displays when you need to take immediate action by firmly steering the vehicle.

See *Hands-On Steering Assist (Lane Centering Assistance)* ⇨ *226*.

Automatic Emergency Braking (AEB) Disabled Light



This indicator displays when you turn off Automatic Emergency Braking or Front Pedestrian Braking.

This indicator also displays if Automatic Emergency Braking or Front Pedestrian Braking are unavailable due to malfunction, weather conditions, or a dirty windshield.

See *Automatic Emergency Braking (AEB)* ⇨ *267*.

See *Front Pedestrian Braking (FPB) System* ⇨ *271*.

Vehicle Ahead Indicator



If equipped, this indicator displays green when a vehicle is detected ahead and amber if you are following a vehicle too closely.

See *Forward Collision Alert (FCA) System* ⇨ *265*.

Pedestrian Ahead Indicator



If equipped, this indicator displays amber when a pedestrian is detected in front of the vehicle.

See *Front Pedestrian Braking (FPB) System* ⇨ *271*.

Traction Off Light



This light displays briefly when you start your vehicle. This is a normal test your vehicle runs on start up. If it does not display, see your dealer for service.

The traction off light displays when the Traction Control System has been turned off. When StabiliTrak/Electronic Stability Control is turned off, the Traction Control System is also turned off. To turn the Traction Control System and StabiliTrak/Electronic Stability Control off and on, see *Traction Control/Electronic Stability Control* ⇨ *205*.

If the Traction Control System is off, wheel slip does not limit acceleration unless necessary to help protect the driveline from damage. Adjust your driving accordingly.

NOT FOR RESALE

Traction Control System (TCS)/ Electronic Stability Control Light



This light displays briefly when you start your vehicle. This is a normal test your vehicle runs on startup. If it does not display, see your dealer for service.

The light flashes when the Traction Control System and/or the StabiliTrak/Electronic Stability Control System is actively working.

If the light is on and not flashing, the Traction Control System and StabiliTrak/Electronic Stability Control System may not be fully operational or able to assist maintaining control. Adjust your driving accordingly. If the condition persists, see your dealer as soon as possible. A message may display in the Driver Information Center.

See *Traction Control/Electronic Stability Control* ⇨ *205*.

The light may also flash when Antilock Brake System is active. See *Antilock Brake System (ABS)* ⇨ *202*.

Trailer Sway Control Light



If equipped, this light will flash when Trailer Sway Control is active. See *General Towing Information* ⇨ *299*.

Electronic Stability Control (ESC) Off Light



This light displays briefly when you start your vehicle. This is a normal test your vehicle runs on start up. If it does not display, see your dealer for service.

This light displays when the StabiliTrak/ Electronic Stability Control system is turned off. When StabiliTrak/Electronic Stability Control is off, the Traction Control System is also off. To turn StabiliTrak/Electronic Stability Control off and on, see *Traction Control/ Electronic Stability Control* ⇨ *205*.

If StabiliTrak/Electronic Stability Control and the Traction Control System are off, the systems do not assist in controlling the vehicle. Adjust your driving accordingly.

Driver Mode Control Light



This light displays when you select Off-Road mode.



NOT FOR RESALE

This light displays when you select Terrain mode.



This light displays when you select the Tow/ Haul mode.



This light displays when you select My Mode.



If equipped, this light displays when you select Max Power mode.

See *Driver Mode Control* ⇨ *207*.

Four-Wheel Steering Light



This light displays amber when Rear-Wheel Steering is off.



This light displays amber when CrabWalk mode is active.

See *Four-Wheel Steering* ⇨ *209*.

Air Suspension Light



This light displays when the vehicle is raised to maximum height.



This light displays when the vehicle is raised to increased height.

It flashes green to indicate that the vehicle is raising the ride height.



This light flashes green to indicate that the vehicle is lowering the ride height.



NOT FOR RESALE

This light displays when the vehicle is lowered for easy entry and exit from the vehicle.



This light displays when the vehicle is lowered to Low Rider mode.



This light displays when the vehicle is in Service mode or Alignment mode.

See *Air Suspension* ⇨ *211*.

Tire Pressure Light



If equipped with the Tire Pressure Monitor System, this light displays briefly when you start your vehicle. This is a normal test your vehicle runs on start up.

The light displays to indicate information about tire pressures and the Tire Pressure Monitor System.

If the Light Stays On

This indicates that one or more of the tires are significantly underinflated.

A Driver Information Center tire pressure message may also display. Stop as soon as possible and inflate the tires to the pressure value shown on the Tire and Loading Information label. See *Tire Pressure* ⇨ *333*.

If the Light Flashes and Then Remains On

If the light flashes for about a minute and then stays on, there may be a problem with the Tire Pressure Monitor System. If the problem is not corrected, the light will display every time the vehicle is started. See *Tire Pressure Monitor Operation* ⇨ *335*.

Security Light



This light displays briefly when you start your vehicle. This is a normal test your vehicle runs on start up. If it does not display, see your dealer for service.

If the light stays on and the vehicle does not start, there could be a problem with the theft-deterrent system. See *Immobilizer Operation* ⇨ *30*.

Vehicle Ready Light



The vehicle ready light displays when the vehicle is ready to be driven.

NOT FOR RESALE

High-Beam On Light



This light displays when the high-beam headlights are in use. See *High-Beam Systems* ⇨ *138 High-Beam Systems* ⇨ *138*.

Automatic High-Beam Light



If equipped, this light displays when the IntelliBeam system is enabled. See *High-Beam Systems* ⇨ *138 High-Beam Systems* ⇨ *138*.

Front Fog Light Indicator



If equipped, this light displays when the front fog lights are turned on. See *Fog Lights* ⇨ *141*.

Lights On Reminder



This light displays when the exterior lights are in use. The light will not display when only the Daytime Running Lights are active. See *Headlight Controls* ⇨ *137*.

Cruise Control Light



If equipped, this light displays white when cruise control is on and ready, and turns green when set and active.

The light turns off when cruise control is turned off. See *Adaptive Cruise Control (Advanced)* ⇨ *214*.

Adaptive Cruise Control Light



If equipped, this light displays the Adaptive Cruise Control status.

See *Adaptive Cruise Control (Advanced)* ⇨ *214*.

NOT FOR RESALE

Super Cruise Light



If equipped, this light displays the Super Cruise status. See *Super Cruise* ⇨ *238*.

Door Ajar Light



This light displays when a door is open or not securely latched. Before driving, check that all doors are properly closed.

Information Displays

Charging

Important Information about EV Charging

⚠ Danger

Improper use of portable EV charge cords may cause a fire, electrical shock, or burns, and may result in damage to property, serious injury, or death.

- Do not use extension cords, multi-outlet power strips, splitters, grounding adapters, surge protectors, or similar devices.
- Do not use an electrical outlet that is worn or damaged, or will not hold the plug firmly in place.
- Do not use an electrical outlet that is not properly grounded.
- Do not use an electrical outlet that is on a circuit with other electrical loads.

(Continued)

Danger (Continued)

- Charging an EV and increased charging rates can stress a building's electrical system more than a typical household appliance.
- Before plugging the charge cord into an electrical outlet for the first time, have a qualified electrician inspect and verify the electrical system (electrical outlet, wiring, junctions, and protection devices) for heavy-duty service at a 12 amp continuous load.
- Check electrical outlets often, as they may wear out with normal use or become damaged over time, making them unsuitable for EV charging.
- Check the electrical outlet/plug while charging. If the electrical outlet/plug appears hot, discontinue using it immediately and have the electrical outlet serviced by a qualified electrician.
- When charging outdoors, use an electrical outlet that is weatherproof.
- Mount the charging cord to reduce strain on the electrical outlet/plug.

(Continued)

NOT FOR RESALE

Danger (Continued)

- Do not place the charge cord in a position where there is risk of it being submerged in water.

See the "Charging" section under Driving and Operating for more information.

Charging App

You can review and manage charging preferences in the Charging app.

To launch the Charging app from the infotainment home screen, select the Charging icon. There are five selections to choose from: Next Charge, Charge Assist, Schedule, Energy Transfer, and Settings. When you launch Charging for the first time, the Next Charge screen will display.

Next Charge

To view the current charging status in the infotainment screen, select Next Charge.

On the Next Charge screen, you can review information for the next charging session and choose Charge Now or Charge Later.

Charge Now

Charge Now is the default charging mode for the vehicle.

The Charge Now screen displays:

Immediate Charging Status: Text indicating the vehicle charges immediately when plugged in and authenticated at a charging location.

Completion Time: Estimated time required to reach the desired charge level.

Target Charge Level Gauge: Percentage where charging stops, along with the estimated range the vehicle can travel after charging is complete.

⚠ Warning

Do not charge your vehicle's battery above an 80% charge if you are going to drive down long, steep grades such as mountain passes. This provides room in the battery for regenerative braking to supplement your conventional brakes during the descent. This is especially

(Continued)

Warning (Continued)

important when towing a trailer, which puts additional stress on your vehicle's braking system.

See *Hill and Mountain Roads* ⇨ *189* for important information about driving on grades.

The default charge level is 80% when plugged in to protect battery life. To set a different charge level, drag the marker on the Target Charge Level gauge to the preferred value. To lower the desired charge level, drag the Charge Level marker to the left. To raise it, drag the marker right. The range estimate updates once you set the desired charge level. To optimize battery health, the minimum allowable charge level is determined by the vehicle.

Charge Later

Instead of charging immediately, you can delay charging to complete by your desired departure time. This may be more economical and energy-efficient when charging at home. To use this mode, select Charge Later on the Next Charge screen.

NOT FOR RESALE

The Charge Later screen allows you to:

Set Desired Completion Time: Choose the desired time for charging to finish. Drag each value up or down within the time selector. If the desired charge level cannot be reached by the selected time, the system displays a message to adjust either the desired charge level or time.

Adjust Target Charge Level: Set the Target Charge Level gauge percentage at which charging stops. This gauge also provides an estimated range the vehicle can travel after charging is complete. To adjust the desired charge level in Charge Later mode, see "Charge Now" earlier in this section.

Preconditioning: Heat or cool the cabin to the desired temperature using energy from the charger, not the vehicle's battery. This option helps maximize battery range after charging. Preconditioning occurs just before departure. Select Preconditioning or go to Settings to adjust the Preconditioning temperature.

Active Charging

For information on vehicle battery and charging, see *Plug-In Charging* ⇨ *282*.

During an active charging session, the Charging screen displays and continuously updates the following items:

- The current charging status
- The range the vehicle can drive at the current charge level
- The range accumulated per hour of charging
- The estimated time to reach the desired charge level
- If equipped, the Charging Rate, showing the current amount of power that is charging the high voltage battery, followed by the maximum amount of power your vehicle is requesting from the charger, represented in kilowatts (kW)
- The Target Charge Level Gauge: The current charge level value represented as a percentage and a colored section of the horizontal gauge.

Drag the marker on the Target Charge Level gauge to change the desired charge level for the active charging session.

If the charge coupler is locked, the Stop Charge button displays. See *Plug-In Charging* ⇨ *282*. Select the Stop Charge button at any time to end the active charging session.

You can also monitor the charge status

- Using the peek-in charging screen when the vehicle is off. See *Instrument Cluster* ⇨ *108*.
- Remotely, using the myGMC app on your mobile device.

Charge Cord Limits

If equipped, for Level 1 and Level 2 chargers, you can select the appropriate charge cord limit for your location. This determines how much current flows from the electrical outlet to the vehicle battery and ensures proper charge time estimates.

A notification displays when you change the charge cord limit to the highest setting on a 120-volt circuit.

For Level 1, when a Home Location is set, the selected cord limit will persist for three months, then the vehicle will reset to the reduced charge level. If no Home Location is set or you select a limit when away from home, the cord limit will reset to the lowest setting when you shift out of P (Park).

For Level 2, the selected cord limit will stay on until you change it.

NOT FOR RESALE

Range and charge time estimates fluctuate depending on factors such as charge cord level/limit, battery temperature, and outside temperature.

Fast Charging

If equipped, the vehicle will immediately begin charging when plugged into a fast charge station. While fast charging, the vehicle will bypass any schedule or departure time selection. See *DC Charging* ⇨ *284*.

Charge Assist

The Charge Assist screen helps locate nearby charging stations. To find a charge station, select on the infotainment screen.

The choices available for Charge Assist including Nearby, Favorites, Routes, or Accounts. Select above the list of charge stations to filter it.

Nearby

Displays nearby stations. Select a station to view details, including:

Station Info: The Station Info screen displays:

- Name of the charge station
- Number of ports available
- Estimated charge percentage remaining upon arrival
- Charge station address
- Favorites button
- Navigation button

Connectors: Displays the connector types and availability. Select a connector to see pricing details and charging speed. Select Start Charging to begin a charging session.

Station Photos: Displays photos of the selected charge station.

Favorites

Displays a list of your favorited stations. You can favorite stations on the Station Details screen.

Routes

Displays planned and saved routes on the myGMC app. To activate a route, select the navigation icon to start route guidance.

Accounts

Displays supported charge provider accounts linked to your myGMC app and allows you to pre-pay for charging. You can also choose to be notified when you are approaching one of the supported providers' stations on your route.

Schedule

Select to schedule a custom charging plan for each day of the week. When you plug the vehicle in at the Home Location, the Schedule feature will automatically charge to the desired charge level and precondition the cabin by the time set in the Schedule. This feature acts as a more customizable Charge Later setting than the one on the Next Charge screen.

Creating a Schedule

Select Create Schedule. If there is no Home Location set, you will be prompted to create one.

The Charging Schedule dialog displays:

- Days of the week, represented by toggles
- Value selector for setting the desired charge level
- Time selector for setting the time the vehicle will reach the desired charge level

NOT FOR RESALE

- Preconditioning: See “Preconditioning” under “Charge Later” earlier in this section.
- ✕ allowing you to close the Charging Schedule screen
- Save & Close: Applies any changes made and exits the dialog

To assign days to the schedule:

1. Select the days you want assigned. Any days not assigned a schedule will begin charging to 80% when plugged in, unless otherwise specified on the Next Charge screen.
2. Select the desired settings.
3. Select Save & Close.

If there are multiple charge schedules, days must be unassigned from their current schedule before they can be assigned to a new one.

To unassign days:

1. On the Home Charge Schedule screen, select the schedule you want to modify.
2. Select the days you want unassigned.
3. Select Save & Close.

To enable or disable all charging schedules, select the toggle switch next to Home Charge Schedule on the Schedule screen.

Modifying and Deleting Charge Schedules

On the schedule screen, select the schedule you want to modify. Make the desired changes and select Save & Close. To delete the schedule, select Delete Schedule and confirm your decision when prompted.

Energy Transfer

Energy Transfer allows you to transfer your vehicle’s high voltage power to your home, if equipped, a device, or another vehicle. Select to set preferences for sharing high voltage battery power through various connections.

The Energy Transfer screen displays:

Persistent Power: Allows you to transfer the high voltage battery power when the vehicle is off. You can set the range reserve to maintain battery power for driving or a timer that will automatically turn off Persistent Power.

Charge Port: Allows you to transfer the high voltage battery power when the vehicle is on.

Outlets: Allows you to enable Energy Transfer outlets. When the outlets are in use, the gauge displays the active load for both halves of the circuit.

Charge Settings

Select to view and change the Charge Settings.

The Charge Settings screen displays:

Home Location

Wireless service and GPS satellite technologies must be available and operating Home Location to function properly. These systems may not operate if the battery is disconnected, or if the vehicle has been off for an extended period. If GPS is unavailable, a message displays on the infotainment screen. GPS functionality may resume after the next time you drive the vehicle.

By setting a Home Location, the vehicle can determine when it is plugged in at home, and charges based on existing schedules. You can change or delete the Home Location using this screen.

NOT FOR RESALE

Charging Status Feedback

This section contains on/off preferences for Charging session notifications.

Beep at Plug-in: When on, the vehicle sounds an audible alert to accompany changes in the charging status.

Alert if Cable Unplugged: If equipped, when the vehicle is on, locked, and connected to a portable cord (120-volt) charger, the horn sounds and the headlights flash if the charge cord becomes unplugged.

Long Beep at Power Loss: When on, the vehicle sounds an audible alert for an extended period if charging power is cut off.

Illuminate Exterior Lights: If equipped, the headlights and taillights display the charging status when the vehicle is on, with more LED bars lighting up as the battery charges. The headlights automatically turn off when charging is complete.

Fast Charge Prep

If equipped, this feature prepares the battery by ensuring it is at the optimal temperature to charge at a Fast Charger.

Depending on outside and battery temperatures, battery conditioning could take longer to reach the optimal temperature.

When using Google Maps, the Fast Charge Prep feature begins automatically when you add a Fast Charge station to your route via on the infotainment screen.

Preconditioning Temperature

Select Preconditioning Temperature to set the preferred cabin temperature. During a planned charging session at the Home Location, the vehicle cabin is warmed or cooled to this temperature if set to ON in either the Charge Later screen or in an active Schedule.

Preferred Charge Times

Preferred Charge Times lets you set charge completion times for the Home Location for weekdays and weekends using the Charge Later or Create Schedule settings, enabling cost-effective, off-peak charging. Preferred Charge Times only works when the vehicle is at the Home Location. If the vehicle does not reach the desired level by the set time, it will continue charging after that time until it reaches the desired charge.

Battery Reserve

Battery Reserve allows you to set the minimum value, between 0% and 80%, where the vehicle will stop the energy transfer to maintain the state of charge. This can be set on the Persistent Power screen or the Charge Settings screen.

Automatic Backup Power

Automatic Battery Power allows you to transfer the high voltage battery power automatically when the home energy management system requests it. The vehicle must be plugged in to the bi-directional charger, and the battery reserve must be above the limit.

Driver Information Center (DIC)

Driver information is displayed in the instrument cluster. It shows the status of many vehicle systems.

Information is broken down into two main zones:

Left Zone: Displays on the instrument cluster to the left of the speedometer.

Right Zone: Displays on the instrument cluster to the right of the speedometer.

NOT FOR RESALE

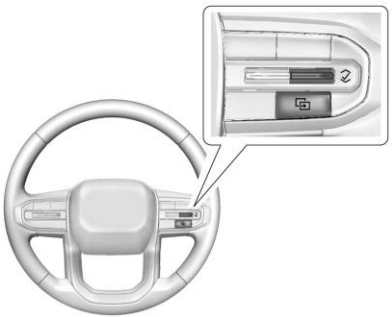

∧ **or** ∨ **:** Use to scroll to the previous or next selection.

✓ **:** Press to open a menu or select a menu item. Press and hold to reset certain displays.

Information Display Options

Select which info display to view by selecting Add to Driver Display in the Vehicle Status on the infotainment display. See *Vehicle Status* ⇨ *129*.

Information Displays

The following is the list of all information displays and their locations. Some information displays may not be available for your vehicle.

Left Zone

Trip Information: The Trip 1 or 2 display shows the current distance traveled, in either kilometers (km) or miles (mi), since the trip odometer was last reset. To reset the trip, touch and hold the touchscreen display when trip odometer is displayed on the vehicle status screen.

The Average Efficiency shows the approximate average kWh per 100 kilometers (kWh/100 km), kilometers per kilowatt hour kWh (km/kWh), or miles per kilowatt hour kWh (mi/kWh). This number is calculated based on the number of kWh/100 km, km/kWh, or mi/kWh recorded since the last time this menu item was reset. This number only reflects the approximate average electrical energy economy that the vehicle has at that moment, and changes as driving conditions change.

Current Trip: Displays distance driven, average efficiency, and time elapsed since vehicle startup. It resets when you turn your vehicle off.

Time/Date: Displays current date, time, and temperature information.

Tire Pressure: Displays the approximate pressures of each tire. Tire pressure displays in either kilopascal (kPa) or in pounds per square inch (psi). If the pressure is low, the value for that tire is shown in amber. See *Tire Pressure Monitor System* ⇨ *335* and *Tire Pressure Monitor Operation* ⇨ *335*.

If equipped, Tire Temperature is located below the tire pressure graphic. Tire Temperature displays overall temperature as either Cold, Cool, Normal, Warm, or Hot. Normal is typical for normal driving while Warm is typical for spirited driving. Unknown displays when tire temperature information is unavailable.

Trailer Brake: On vehicles with the Integrated Trailer Brake Control system, the trailer brake display appears in the Driver Information Center.

TRAILER GAIN shows the trailer gain setting. This setting can be adjusted from 0.0 to 10.0 with either a trailer connected or disconnected.

TRAILER OUTPUT shows the power output to the trailer any time a trailer with electric brakes is connected. Output is displayed as a bar graph. Dotted lines may appear in the OUTPUT display if a trailer is not connected.

Trailer Tire Pressure: If equipped, displays the approximate pressures of all trailer tires. Tire pressure is displayed in either kilopascal (kPa) or in pounds per square inch (psi). If the

NOT FOR RESALE

pressure is low, the value for that tire is shown in amber. See *General Towing Information* ⇨ *299*.

Trailer Tire Temperature is located below the tire pressure. Trailer Tire Temperature shows each trailer tire temperature in either degrees Celsius (°C) or degrees Fahrenheit (°F).

Energy Usage: Displays how the vehicle is using energy since it was last started as percentages of use in different categories.

Energy Efficiency: Displays a graph showing the energy efficiency of the vehicle over a recently driven distance.

Off: Displays no information in the cluster information display areas.

Right Zone

Auto Lane Change: Displays the status of a driver-requested lane change when Super Cruise is active. See *Super Cruise* ⇨ *238*.

Audio Now Playing: Displays the actively playing audio.

Navigation: Displays a variety of navigation information.

Phone: Displays a variety of call information.

Off: Displays no information in the cluster information display areas.

Vehicle Status

To access the menu select the Vehicle Status icon from the infotainment home screen. Vehicle status content is grouped together and shown on the infotainment display.

Follow any messages or alerts that display. Some options may be unavailable while driving.

Select Add to Driver Display to send the desired content to the Driver Information Center. Select Remove from Display to remove the selected content from the Driver Information Center. See *Driver Information Center (DIC)* ⇨ *127*.

Options

The following is the list of vehicle status content and location. Not all content and options may be available for your vehicle. Options are subject to change due to software updates. See *How Your Vehicle is Updated* ⇨ *402* and *Vehicle Update Additional Information* ⇨ *402*.

Overview

Displays an interactive image of your vehicle's performance and health information.

Maintenance

Tire Pressure: Displays the approximate pressures of each tire. Tire pressure displays in either kilopascal (kPa) or in pounds per square inch (psi). If the pressure is low, the value for that tire is shown in amber. See *Tire Pressure Monitor System* ⇨ *335* and *Tire Pressure Monitor Operation* ⇨ *335*.

If equipped, Tire Temperature is located below the tire pressure graphic. Tire Temperature displays overall temperature as either Cold, Cool, Normal, Warm, or Hot. Normal is typical for normal driving while Warm is typical for spirited driving. Unknown displays when tire temperature information is unavailable.

Choose from the following options: Relearn Sensors and Add to Driver Display.

Tire Rotation: If equipped, displays the tire rotation status and distance since the last tire rotation. Rotating your tires regularly prevents uneven wear. Schedule service when it is convenient. See *Tire Rotation Monitor* ⇨ *339* and *Maintenance Schedule* ⇨ *375*.

Choose from the following options: Turn Off/On Notifications and Reset.

NOT FOR RESALE

Energy Info

Energy Usage: Displays how the vehicle is using energy since it was last started. It shows both overall energy use and percentages of use in different categories. Select a category to learn more about how your vehicle uses energy from the battery.

Select Add to Driver Display if desired.

Energy Efficiency: Displays a graph showing the energy efficiency that has been used by the vehicle over a recently driven distance. When selected, regenerated range, and instant efficiency is shown along with average efficiency in the dialog.

Select Add to Driver Display if desired.

Battery Capacity: Displays the capacity of the high voltage battery compared to when it was new. It is normal for capacity and range to decrease with age. After the high voltage battery system is serviced, CALCULATING may display while capacity is determined.

Updating Battery Capacity

The LAST UPDATED value updates automatically and may not appear right away. To attempt an update:

1. Drain the battery to LOW range. To do so, try driving the vehicle or running the HVAC system on high. When the battery nears LOW range, go to a charge station. See *Battery Gauge (High Voltage)* ⇨ *109*.
2. Once at LOW, shift into P (Park), turn off and exit the vehicle, removing the remote key.
3. Let the vehicle sit for three hours.
4. Plug in and charge the vehicle to 100%.
5. Once vehicle is complete at 100%, let the vehicle sit for another three hours.
6. Start the vehicle and see if the LAST UPDATED value has reset to 0 kilometers (0 miles).

The above procedure does not guarantee an update to the LAST UPDATED value. An update may not occur if battery conditioning or another event interrupts the rest period, or no changes have occurred since the last update. Frequently performing this action may reduce high voltage battery performance.

Trip

Trip Information: Trip 1 or 2 displays the current distance traveled, in either kilometers (km) or miles (mi), since the trip odometer was last reset.

If equipped, Average Efficiency shows the approximate average kilometers per kilowatt hour kWh (km/kWh) or miles per kilowatt hour kWh (mi/kWh). This number is calculated based on the number of km/kWh or mi/kWh recorded since the last time this menu item was reset. This number only reflects the approximate average electrical energy economy that the vehicle has at that moment, and changes as driving conditions change.

To reset these values, touch reset on the touchscreen display when the Trip Information dialog is selected.

Choose from the following options: Reset Trip 1, Reset Trip 2, and Add to Driver Display.

Current Trip: Displays distance driven, average efficiency, and time elapsed since vehicle startup. It resets when you turn your vehicle off.

Select Add to Driver Display if desired.

NOT FOR RESALE

Head-Up Display (HUD)

⚠ Warning

A Head-Up Display (HUD) image that is too bright or positioned too high in your field of view can reduce your ability to see the road ahead, especially at night. This may increase the risk of a crash. Keep the HUD image dim and positioned low in your field of view.

Caution

If you try to use the HUD image as a parking aid, you may misjudge the distance and damage your vehicle. Do not use the HUD image as a parking aid.

Caution

The Head-Up Display projects information using polarized light. Wearing polarized sunglasses can block this light, making the image invisible, dim, or difficult to read. Do not use polarized sunglasses when using the Head-Up Display feature.

If equipped, the Head-Up Display (HUD) projects vehicle information onto the windshield through a lens on top of the instrument panel.

You can change the language and the units of measurement to English or metric through the infotainment screen. See “System” under *Settings* ⇨ *162*.

If equipped, the Head-Up Display (HUD) may display the following vehicle information, messages, or alerts:

- Speed
- Incoming Phone Calls
- Navigation
- Driver Assistance Indicators
- Vehicle Messages

Controls

To turn the Head-Up Display (HUD) on or off and adjust the brightness, height, and rotation, go to the infotainment home screen and select Controls > HUD.

Image

To adjust the Head-Up Display (HUD) image:

1. Adjust the driver seat to your optimal driving position.
2. Start the vehicle.
3. On the infotainment home screen, select Controls > HUD.
4. Press the height and rotation icons or tap the bars to adjust the image to a position level with the ground that is fully visible and clear.
5. The image will automatically dim and brighten to compensate for outside lighting. Use the brightness icons to adjust as needed.

The image can temporarily light up depending on the angle and position of sunlight on the image. This is normal.

The Head-Up Display (HUD) settings are stored and recalled with memory seats, if equipped. See *Memory Seats* ⇨ *44*.

Options

Speed Limit Sign:

- To turn the posted speed sign, if equipped, in the Head-Up Display (HUD) on or off, on the infotainment home screen, select *Settings* ⇨ *162* > Display > Driver Display.

NOT FOR RESALE

- To turn Traffic Sign Recognition, if equipped, in the Head-Up Display (HUD) on or off, select *Settings* ⇨ *162* > Vehicle > Speed Assist.

Turn-by-Turn Navigation:

- To turn the Turn-by-Turn Navigation in the Head-Up Display (HUD) on or off, on the infotainment home screen, select *Settings* ⇨ *162* > Display > Head-Up Display.

Content

If equipped, the following content displays in the Head-Up Display (HUD). Critical alerts may appear in the display, even when it is turned off.

Speed: Displays the speedometer reading in English or metric units, posted speed limit, and some indicators. See *Symbols* ⇨ *3*. Incoming phone call information, if connected via Bluetooth, and some alerts will temporary display in the Head-Up Display (HUD).

Navigation: If equipped, displays the speed content and Turn-by-Turn Navigation information during an active route.

Troubleshooting

To ensure optimal visibility of the Head-Up Display (HUD) image, make sure that:

- The windshield is clean. See *Interior Care* ⇨ *370*. The windshield is part of the Head-Up Display (HUD) system. See *Windshield Replacement* ⇨ *315*.
- The lens is clean and clear of any obstructions. See *Interior Care* ⇨ *370*.
- The brightness setting is appropriately adjusted.
- The Head-Up Display (HUD) is adjusted to the proper height and rotation.

If you continue to experience problems, contact your dealer.

Vehicle Messages

Messages displayed on the Driver Information Center indicate the vehicle status or needed action to correct a condition. Multiple messages may appear together.

If equipped, vehicle status notifications are also sent to the infotainment display. Touch on the infotainment app screen to display vehicle messages. A red dot on the notification icon indicates an active issue. Depending on the message, you can schedule service, find the nearest dealer, or find the nearest charging station.

Press ✓ to acknowledge and clear the messages that do not require immediate action. You cannot clear messages that require immediate action until that action is performed.

Address and follow all message instructions promptly; clearing a message does not correct the issue.

If a SERVICE message appears, see your dealer.

The system may display messages concerning:

- Service Messages
- Fluid Levels
- Vehicle Security
- Brakes
- Ride Control Systems
- Advanced Driver Assistance Systems
- Cruise Control
- Lighting and Bulb Replacement
- Wiper/Washer Systems
- Doors and Windows

NOT FOR RESALE

- Seat Belts
- Airbag Systems
- Propulsion
- Tire Pressure
- Battery
- Steering

Propulsion Power Messages

REDUCED ACCELERATION DRIVE WITH CARE

This message indicates reduced propulsion power, which will affect maximum acceleration. Drive with caution. Try restarting after the vehicle has been off for two minutes. If acceleration decreases significantly, propulsion may be disabled while the vehicle is in motion.

If this message stays on or appears repeatedly, take the vehicle to your dealer for service as soon as possible.

This message may also display when the high voltage battery charge level is low. This is normal and a result of reduced battery capability.

VEHICLE POWER REDUCED DUE TO TEMPERATURE

This message indicates low battery temperature has reduced vehicle acceleration and performance.

As the vehicle is driven, the battery will warm and restore propulsion to normal operation. If the battery state of charge is too low, propulsion will not return to normal even if the vehicle warms up. See *Plug-In Charging* ⇨ *282* for recommended charge levels.

Always keep the vehicle plugged in to maintain the high voltage battery temperature for the next drive, especially in extremely cold weather.

Vehicle Speed Messages

SPEED LIMITED TO XXX KM/H (MPH)

This message indicates that the vehicle has limited its speed to protect vehicle systems, such as lubrication, thermal, brakes, suspension, tires, or Teen Driver, if equipped.

Universal Remote System

Universal Remote System Programming (Garage Door Opener)

The Universal Remote System can replace up to eight remote control transmitters (remote controls), such as garage door openers, security systems, and home automation devices. These instructions address garage door openers, but will work for other devices, too.

Do not use the Universal Remote System with any garage door opener that does not have the stop and reverse feature. This includes any garage door opener model manufactured before April 1, 1982.

Keep the original hand-held transmitter for use in other vehicles and future programming and erase the system if you terminate vehicle ownership. See “Erasing Universal Remotes” later in this section.

NOT FOR RESALE

Programming the Universal Remote System

Programming involves time-sensitive steps. You must complete these steps within the allotted time, or you will have to repeat programming.

Read these instructions completely before programming the Universal Remote System. It may help to have another person assist with the programming process.

1. If your garage door opener includes a hand-held transmitter, make sure it has a new battery for quick and accurate transmission of the radio-frequency signal.
2. Clear all people and objects away from the garage door.
3. Park your vehicle outside and directly facing the garage door opener receiver. The vehicle must remain in P (Park) for the entire duration of the programming.
4. From the Controls menu, select Universal Remotes > Add Remote.

   Depending on the vehicle, access the Controls menu from either the infotainment apps screen or the front center console.
5. If you have a hand-held transmitter, make sure to press Yes to continue to the next step.

   If your garage door opener does not include a hand-held transmitter, press either D-Mode (mostly used in North America), or UR-Mode (mostly used in Europe, Mideast, and Asia), and jump to "D-Mode and UR-Mode Based Programming" later in this section.

   Hand-Held Transmitter Based Programming

   Once you press Yes for the hand-held transmitter, you should see a screen with Searching for Signal.
6. While Searching for Signal is displayed, press and hold the hand-held transmitter button about 3 to 8 cm (1 to 3 in) away from the rear-view mirror. Do not release the button until Signal Found displays.

   If Signal Found does not display after 45 seconds, press < and return to Step 4 to try again.

   Some garage door openers require a modification to Step 6. See "Radio Signals for Some Gate Operators" later in this section.
7. Once Signal Found displays, press the Test button on the screen. You may need to press it several times, as some garage door openers require multiple valid signals when programming.
8. If your garage door moves, press the It Worked button to confirm programming was successful and end the process.

   If programming was not successful, you can return to Step 4 and try again or follow additional steps described in "D-Mode and UR-Mode Based Programming" later in this section. You can also consult with HomeLink by jumping to "Contact HomeLink" later in this section.

   D-Mode and UR-Mode Based Programming

   If supported, you may be able to program D or UR mode garage door receiver remotes.
9. Locate the Learn or Smart button on the garage door opener receiver in the garage. The name and color may vary by manufacturer but is usually located near the antenna wire. If you have any difficulty finding the button, refer to the garage door opener manufacturer's instructions.

NOT FOR RESALE

10. Press and release the Learn or Smart button on the garage door opener receiver, then complete the next step within 30 seconds of pressing the button. If it takes longer than 30 seconds, press the button again.
11. Return to the vehicle and press the Test button on the screen. You may need to press the Test button several times. If your garage door moves, then programming was successful. Press the It Worked button to confirm programming was successful and end the process.

    If programming was not successful, you may retry steps above by pressing the It Didn't Work button or consult with HomeLink by jumping to "Contact HomeLink" later in this section.

Contact HomeLink

For questions or programming help, visit www.homelink.com/gm or call 1–800–355–3515. International rates apply for calls placed outside the U.S., Canada, or Puerto Rico, and may differ based on landline or mobile phone.

Using Universal Remotes

After successfully programming your Universal Remote, you can change the name and location of the remote as desired by selecting next to the remote on the screen. Be sure that you are nearby your programmed garage door opener when you select Update Location.

Each successfully programmed remote creates a shortcut icon. Tap the desired shortcut icon to operate the remote. You can press and drag icons to reposition them on the screen as desired.

Erasing Universal Remotes

To erase an individual programmed Universal Remote, select next to the remote on the screen you wish to erase. Then select Delete.

To erase ALL programmed Universal Remotes, select next to any remote on the screen. Then select Delete All.

Radio Signals for Some Gate Operators

Some gate operators and radio-frequency laws require transmitter signals to time out after several seconds of transmission. This may not be long enough for the Universal Remote system to pick up the signal during programming. If programming did not work, replace Step 6 under "Programming the Universal Remote System," previously in the section, with the following:

Press and release the hand-held transmitter button every two seconds until Signal Found appears on the screen. Continue to Step 7 to complete programming.

Universal Remote System Operation (Garage Door Opener)

Using the Universal Remote System

Press the desired Universal Remote button on the infotainment apps screen or the front center console, depending on the vehicle.

Reprogramming a Single Universal Remote System Button

To reprogram any of the system buttons:

1. Select the universal remote to be reprogrammed.
2. Select "Delete."

NOT FOR RESALE

3. Select “Add Remote.” Follow the instructions in *Universal Remote System Programming (Garage Door Opener)* ⇨ *133*.

NOT FOR RESALE

Lighting

Exterior Lighting
Headlight Controls 137
High-Beam Systems 138
Headlights Off Reminder 139
Daytime Running Lights 139
Automatic Headlight System 139
Hazard Warning Flashers 140
Turn and Lane-Change Signals 140
Fog Lights 141
Cornering Lights 141
Exterior Cargo Lights 141

Interior Lighting
Instrument Panel Illumination Control 142
Dome Lights 142
Reading Lights 142

Lighting Features
Entry Lighting 143
Exit Lighting 143
Ambient Lighting 143
Battery Load Management 144
Battery Power Protection 144
Exterior Lighting Battery Saver 144

Exterior Lighting

Headlight Controls

The headlight control is located on the infotainment screen. Touch the Headlights symbol, then select any of the following options.

Off: Turns off the exterior lights.

For vehicles first sold in Canada, the Automatic Headlight System activates when Off is selected, and either the headlights or Daytime Running Lights come on. See *Daytime Running Lights* ⇨ *139*.

Auto: Enables the automatic headlight system, which controls the exterior lights and instrument panel lights depending on outside lighting. See *Automatic Headlight System* ⇨ *139*.

: Turns on the parking lights, taillights, instrument panel lights, front/rear side marker lights, and license plate lights.

: Turns on the headlights and all the lights listed in .

Headlights can also be activated in the Controls & Safety app. On the infotainment home screen, select Controls > See More Controls > Lights > Headlights.

Lights On in Canada

For vehicles first sold in Canada, it is required that either Daytime Running Lights or headlights are always on when the vehicle is shifted out of P (Park). Even if the headlight control is set to Off or , the Automatic Headlight System is engaged and ensures that either the Daytime Running Lights or headlights come on based on outside light level.

Optional Reminder If Headlights Are Off

You can set a reminder for the vehicle to display a message if it is dark outside and the headlights are off. On the infotainment home screen, select > See More Controls > Lights > Headlights, then touch > in the upper corner of the Headlights menu. Touch the box next to Turn Headlight Reminder On to enable or disable the option.

NOT FOR RESALE

High-Beam Systems

Manual High-Beam Controls

High/Low-Beam Changer

To manually turn the high beams on, push the turn signal lever away from you. To return to low beams, push the lever again or pull it toward you and release.

The high-beam indicator light appears in the instrument cluster when the high-beam headlights are on.

Flash-to-Pass

To flash the high beams, pull the turn signal lever toward you and release.

Automatic High-Beam System — IntelliBeam

If equipped, this system turns the high-beam headlights on and off automatically when it is dark enough and no other traffic is present.

There is a sensor near the top center of the windshield that automatically detects the lights of oncoming and preceding vehicles. Keep this area of the windshield clear of obstructions for best system performance.

Turning IntelliBeam On and Off

To enable IntelliBeam:

1. Set the Headlights control to Auto or . See *Headlight Controls* ⇨ *137*
2. On the infotainment app screen, select Controls > Auto High Beams > On or > See More Controls > Lights > Auto High Beams > On.

The IntelliBeam light AUTO appears in the instrument cluster when the system is enabled.

To disable the system when high beams are ON, turn on the manual high beams using either the high/low-beam changer or flash-to-pass.

You can disable the system from the infotainment app screen by selecting > Auto High Beams > Off.

Driving with IntelliBeam

⚠ Warning

Using high beams in dense exhaust, smoke, fog, snow, road spray, mist, or other airborne obstructions can cause a glare,

(Continued)

Warning (Continued)

obstructing your vision. This reduction in visibility can result in a crash. Never use high beams in dense exhaust, smoke, fog, snow, road spray, mist, or other airborne obstructions.

The system only activates the high beams when driving over 40 km/h (24 mph).

The blue High-Beam On light AUTO appears on the instrument cluster when the high beams are on.

The high-beam headlights remain on, under automatic control, until one of the following situations occurs:

- The vehicle speed drops below 20 km/h (12 mph).
- The outside light is bright enough that high-beam headlights are not required.
- The system detects an approaching vehicle's headlights.
- The system detects a preceding vehicle's taillights.
- You manually disable IntelliBeam.

NOT FOR RESALE

- You set the headlight control to Off or Parking .

The high-beam headlights may not turn off automatically and must be manually disabled if the system cannot detect another vehicle's lights because of any of the following conditions:

- The other vehicle's lights are missing, damaged, or otherwise undetected.
- The other vehicle's lights are covered or obstructed from view by dense exhaust, smoke, fog, snow, road spray, dirt, mist, or other obstructions.
- The windshield is dirty, cracked, or the light sensor is obstructed.
- A heavy vehicle load raises the front end such that the sensor aim is too high to detect lights.
- You are driving on winding or hilly roads.

Headlights Off Reminder

An audible alert sounds upon opening the driver door if the vehicle is off and the headlights or parking lights are still on. To disable the audible alert, turn off the lights.

Daytime Running Lights

Daytime Running Lights make it easier for others to see the front of your vehicle during the day.

The Automatic Headlight System turns the Daytime Running Lights on and off.

When Daytime Running Lights Turn On

The Daytime Running Lights turn on when all the following conditions are met:

- The vehicle is on
- The headlight control is set to Auto
- The light sensor determines it is daytime

The instrument panel lights, taillights, and other exterior lights do not turn on when the Daytime Running Lights are on.

For vehicles first sold in Canada: When not in P (Park), either the Daytime Running Lights or headlights are always on, regardless of the headlight control setting, due to Canadian safety regulations.

When Daytime Running Lights Turn Off

When it begins to get dark, the automatic headlight system turns off the Daytime Running Lights and turns on the headlights.

The Daytime Running Lights turn off when you either turn on the headlights or turn off the vehicle.

For vehicles first sold in Canada, the Daytime Running Lights turn off only when the vehicle is shifted to P (Park) and the headlight control is set to off or .

Automatic Headlight System

The Automatic Headlight System controls the headlights, other exterior lights, and instrument panel lights depending on the outside light level.

To enable the system, set the headlight control to Auto.

- If it is dark enough outside, the system turns on the interior instrument panel lights and the exterior lights, such as headlights, taillights, parking lights, and license plate lights.
- If it is bright enough outside, the system turns off the exterior lights and instrument panel lights and may turn on the Daytime Running Lights.

To turn off the Automatic Headlight System, either turn the headlight control or the vehicle off.

NOT FOR RESALE

Low Light Conditions During Daylight Hours

When driving through a parking garage, tunnel, or heavy overcast weather, the automatic headlight system may sense a low light level and turn on the headlights. This is normal.

If you start the vehicle in a dark garage, the headlights turn on immediately. If it is light outside when the vehicle leaves the garage, there is a slight delay before the Automatic Headlight System switches over to Daytime Running Lights. During that delay, the instrument cluster may not be as bright as usual. Make sure the instrument panel brightness control is in the full bright position. See *Instrument Panel Illumination Control* ⇨ *142*.

Location of Light Sensor

A light sensor on top of the instrument panel measures the outside light level. See *Instrument Panel Overview* ⇨ *5*.

Do not cover the sensor, otherwise the exterior lights will turn on when not needed.

Lights On with Wipers

If you activate the windshield wipers in the daylight with the vehicle on and the headlight control set to Auto, the headlights, parking lights, and other exterior lights turn on. The transition time for the lights turning on varies based on wiper speed. When the wipers are not operating, these lights turn off.

Set the headlight control to off or Parking to disable this feature.

Hazard Warning Flashers

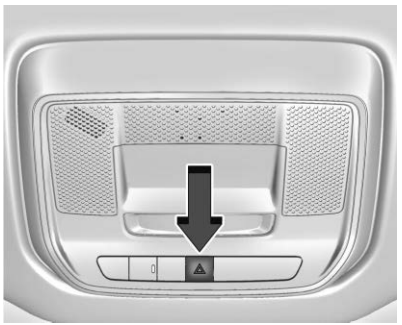

Hazard warning flashers help alert others that you are having trouble. Press button on the overhead console to turn the front and rear turn signal flashers on. Press again to turn them off.

When the hazard warning flashers are on, the turn signal lights do not respond to the turn signal lever.

The hazard warning flashers turn on automatically if the airbags deploy.

Turn and Lane-Change Signals

Raise or lower the turn signal lever until the arrow on the instrument cluster starts to flash in the corresponding direction. See *Instrument Panel Overview* ⇨ *5*.

Changing Lanes: Hold the lever in place until you complete the lane change. Let go of the lever and it returns to its starting position.

If you raise or lower the lever quickly then release it, the turn signal flashes three times. It flashes six times if Tow/Haul mode is active. See *Driver Mode Control* ⇨ *207*.

If you change lanes without using the turn signal, the Lane Keep Assist system, if equipped, may respond. See *Lane Keep Assist (LKA)* ⇨ *279*.

NOT FOR RESALE

Turning Corners: Move the lever all the way up or down so that it stays in place when you let go. When you complete the turn, bringing the steering wheel back to center will automatically turn off the turn signal.

If the steering wheel did not turn far enough, the turn signal will remain flashing until you move the lever back to its starting position.

Turn Signal On Alert

If you leave the turn signal on for more than 1.2 km (0.75 mi), an audible alert sounds at each flash of the turn signal. The message TURN SIGNAL ON also appears in the Driver Information Center. To turn off both the audible alert and message, move the turn signal lever back to its starting position.

Turn Signal Not Working Normally

If the indicator arrow flashes rapidly when using the turn signal, an exterior LED may have burned out. See your dealer for service.

If the exterior LED is not burned out, check the fuse. See *Instrument Panel Fuse Block (Right)* ⇨ *323 Instrument Panel Fuse Block (Left)* ⇨ *325*.

Fog Lights

If equipped, front fog lights provide additional illumination below the headlights to help improve visibility in certain weather or road conditions.

The vehicle must be on and the parking lights or headlights must be on for the front fog lights to work.

To turn the fog lights on or off, select Controls > Front Fog Lights. When the front fog lights are on, the icon appears highlighted and an indicator light on the instrument cluster comes on.

- Some localities have laws that require the headlights to be on along with the fog lights.
- Some localities have laws that require the high beams to be off when the fog lights are on.

Cornering Lights

If equipped, cornering lights automatically turn on when all the following conditions occur:

- The low-beam headlights are on.
- You activate the turn signals or turn the steering wheel to turn a corner.
- The vehicle speed is below 40 km/h (25 mph).

Exterior Cargo Lights

The exterior cargo lights provide extra illumination in the cargo area or on the sides of the vehicle.

Become familiar with and follow all state and local laws that apply to cargo light operation.

To turn the exterior cargo lights on or off:

1. Stop the vehicle safely, then shift to P (Park) or N (Neutral). See *Electric Drive Unit* ⇨ *197*.
2. From the infotainment home screen, select Controls > Lights > Cargo Lights.
3. There may be multiple types of cargo lights listed. Touch the box next to the listed area to turn that cargo light on or off.

   Activating the exterior cargo lights may also activate the lights inside the pickup box, in the tailgate handle, and at the hitch.

NOT FOR RESALE

Interior Lighting

Instrument Panel Illumination Control



Rotate this thumbwheel to adjust the brightness of all illuminated controls. The thumbwheel is on the instrument panel to the left of the steering wheel.

The brightness can be adjusted only at night or when the headlights or parking lights are on.

Dome Lights

Dome lights provide overhead interior lighting and lighting in the rear cargo compartment. They may turn on automatically as part of entry lighting and exit lighting.

To turn the dome lights on or off manually, from the app screen on the infotainment display, select > .

Auto Mode

You can set an option for the dome lights to turn on automatically or to stay off when you open any door.

Select > See More Controls > Lights.

Touch > in the upper corner of the Dome Light menu.

Touch the Auto box to enable or disable this option.

Reading Lights

Reading lights are located on the overhead console and over the rear seats. To turn a reading light on or off, press the light lens.

The reading lights are also used as dome lights, and may come on with entry and exit lighting. See *Dome Lights* ⇨ *142*.

Front Reading Lights



The front reading lights are in the overhead console.

NOT FOR RESALE

Rear Reading Lights

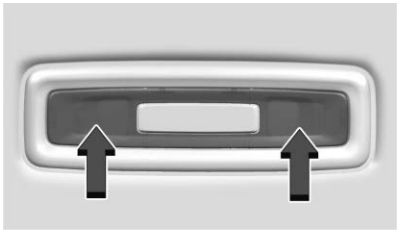

The rear reading lights are above and behind the rear seats.

Lighting Features

Entry Lighting

The entry lighting feature automatically turns on various interior and exterior lights for increased visibility in and around a vehicle.

Interior: The interior lights may turn on when you open any doors or press on the remote key.

For interior lights to turn on, you must enable the Auto option for the dome lights. See *Dome Lights* ⇨ *142*.

Exterior: Some exterior lights also turn on when you press on the remote key.

Low-beam headlights will only turn on briefly at night, or in areas with limited lighting.

All interior and exterior lights turn off when you press on the remote key or start the vehicle. The lights eventually turn off automatically if you do not interact with the vehicle.

To change this feature, from the app screen on the infotainment display, select Settings > Vehicle > Lighting.

Approach Detection

If equipped, entry lighting activates when the vehicle detects the remote key within approximately 2 m (6 ft).

If you do not use the remote key or keyless access for an extended period while the vehicle is parked, approach detection deactivates. To reactivate approach detection, press any button on the remote key or open and close all doors.

Exit Lighting

Some exterior lights and interior lights turn on when the driver door is opened after the vehicle is turned off.

The exterior and interior lights remain on for a set amount of time, then automatically turn off.

The interior lights turn on when the vehicle is turned off.

The exterior lights turn off immediately when the headlight control is set to Off.

This feature can be changed. From the app screen on the infotainment display, select Settings > Vehicle > Lighting.

Ambient Lighting

If equipped, the ambient lighting feature allows you to customize the color and brightness of the lights throughout the passenger cabin.

On the infotainment home screen, select Ambient Lighting, then choose from the following options:

On/Off: Slide the on-screen toggle right to enable ambient lighting or left to disable it.

Brightness: Drag the indicator bar along the scale or tap either end to increase or decrease brightness.

Color: Touch a color to select and apply a color from the palette.

NOT FOR RESALE

Link to Drive Mode: If equipped, select this option to pair the ambient lighting with drive modes. When you select a drive mode, the ambient lighting changes to a preset color assigned to that mode. This option overrides the currently selected color. See *Driver Mode Control* ⇨ *207*.

Demo Mode: If equipped, select this option to automatically cycle through the available colors. Demo Mode is only available when the vehicle is in P (Park).

Battery Load Management

Electric Power Management estimates the battery temperature and state of charge. It then adjusts the voltage for best performance and extended life of the battery.

When the battery state of charge is low, the voltage raises slightly to quickly increase the charge. When the state of charge is high, the voltage lowers slightly to prevent overcharging. As this adjustment occurs, you may see the voltage move up or down on the voltmeter gauge or voltage display, if equipped, on the instrument cluster. This is normal. If a problem occurs, an alert will display. See *Instrument Cluster* ⇨ *108*.

If the electrical loads are too high, the battery can be discharged when the vehicle is stationary. A high electrical load occurs when several of the following features are on: headlights, high beams, rear window defogger, climate control fan at high speed, heated seats, motor cooling fans, trailer loads, and loads plugged into accessory power outlets.

Electric Power Management prevents excessive discharge of the battery by balancing the electrical system output and the vehicle's electrical needs. In some cases, it can temporarily reduce the power demands of some accessories.

These actions occur in steps or levels without being noticeable. In rare cases at the highest levels of corrective action, you may notice these actions and a Driver Information Center battery voltage and charging message displays. If so, reduce the electrical loads as much as possible. See *Driver Information Center (DIC)* ⇨ *127*.

Battery Power Protection

This feature helps prevent the battery from being drained if you leave the interior dome lights or reading lights on. These lights automatically turn off 10 minutes after you turn the vehicle off. The lights will not turn back on again until one of the following actions occurs:

- You start the vehicle.
- You close the doors, then re-open them.

Exterior Lighting Battery Saver

If you leave the parking lights or headlights on manually, they turn off about 10 minutes after you turn the vehicle off. This protects against draining the battery.

To restart the 10-minute timer, set the headlight control to ⏻ and then select  or .

To keep the parking lights or headlights on for more than 10 minutes, start the vehicle.

NOT FOR RESALE

Infotainment System

Introduction
Introduction 145
Overview 146
Steering Wheel Controls 146
Using the System 147

Radio
AM-FM Radio 148
Satellite Radio 149
Radio Reception 150
Multi-Band Antenna 151

Audio Players
Avoiding Untrusted Media Devices 151
USB Port 151
Bluetooth Audio 151

Navigation
Using the Navigation System 152
Maps 152
Navigation Symbols 153
Destination 153
Global Positioning System (GPS) 154
Vehicle Positioning 154
Problems with Route Guidance 155

Voice Assistant
Voice Assistant 155

Phone
Bluetooth (Overview) 157
Bluetooth (Pairing and Using a Phone) 158

Settings
Settings 162
Teen Driver 165

Trademarks and License Agreements
Trademarks and License Agreements 168

Introduction

Read the following pages to become familiar with the features.

⚠ Warning

Taking your eyes off the road for too long or too often while using any infotainment feature can cause a crash. You or others could be injured or killed. Do not give extended attention to infotainment tasks while driving. Limit your glances at the vehicle displays and focus your attention on driving. Use voice commands whenever possible.

The infotainment system has built-in features intended to help avoid distraction by disabling some features when driving. These features may become disabled when they are unavailable. Many infotainment features are also available through the instrument cluster and steering wheel controls.

Before driving:

- Become familiar with the operation, center stack controls, steering wheel controls, and infotainment display.

NOT FOR RESALE

- Set up the audio by presetting favorite stations, setting the tone, and adjusting the speakers.
- Set up phone numbers in advance so they can be called easily by pressing a single control or by using a single voice command.

See *Distracted Driving* ⇨ *178*.

Overview

Infotainment System

The infotainment system is controlled by using the infotainment display, controls on the center stack, steering wheel controls, and voice recognition, if available.

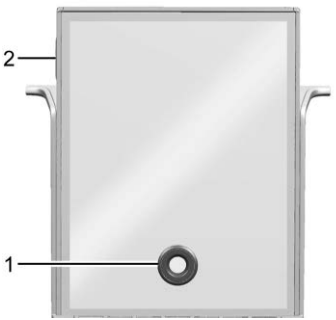

1. Volume
   - Turn to decrease or increase the volume.
2. ⏻ (Power)
   - Press to turn the power on.
   - Press to mute/unmute the system when on.
   - Press and hold to turn the power off.

Infotainment Home Screen

The infotainment home screen is where vehicle application icons are accessed. Some applications are disabled when the vehicle is moving.

Swipe left or right across the display to access the pages of icons.

Managing Infotainment Home Screen Icons

1. Touch and hold any of the infotainment home screen icons to enter edit mode.
2. Continue holding the icon and drag it to the desired position.
3. Release your finger to drop the icon in the desired position.

Move an Icon to Another Page

1. Drag the icon to the edge of the display toward the desired page.
2. Continue dragging and dropping application icons as desired.

Move an Icon to the Application Tray

To move an icon to the application tray, drag the icon to the applications tray.

Steering Wheel Controls

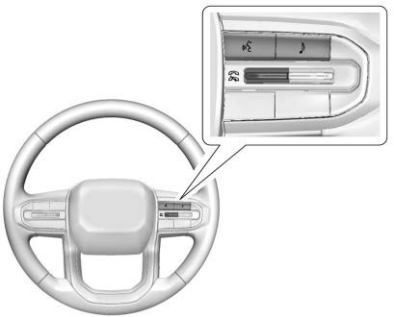

If equipped, some audio controls can be adjusted at the steering wheel.

NOT FOR RESALE

: Press to answer an incoming call or start voice recognition. See *Bluetooth (Pairing and Using a Phone)* ⇨ *158 Bluetooth (Overview)* ⇨ *157*.

: Press to open the audio source list.

: Toggle up to answer an incoming call. Toggle down to decline an incoming call, end a current call or to mute or unmute the infotainment system when not on a call.

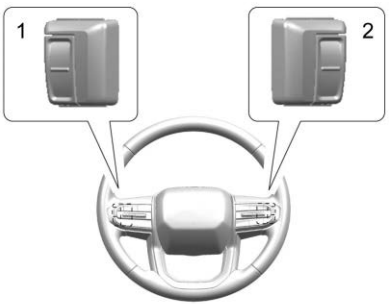

The favorites and volume switches are on the back of the steering wheel.

1. Favorite: When on a radio source, press to select the next or previous audio broadcast favorite. When listening to a media device, press to select the next or previous track.
2. Volume: Press to increase or decrease the volume.

Using the System

Audio

Touch the Audio icon to display the active audio source page. Examples of available sources may include AM, FM, SiriusXM (if equipped), USB, AUX, and Bluetooth.

Phone

Touch the Phone icon to display the Phone main page. See *Bluetooth (Pairing and Using a Phone)* ⇨ *158 Bluetooth (Overview)* ⇨ *157*.

Maps

If equipped, touch the Maps icon to display the navigation map. See *Using the Navigation System* ⇨ *152*.

Google Assistant or Gemini

If equipped, touch the Google Assistant or Gemini icon to open the Google Assistant or Gemini app. See *Voice Assistant* ⇨ *155*.

Google Play

If equipped, touch to download some of your favorite apps in your vehicle. Downloading apps on Google Play requires you to sign into a Google Account and have internet connectivity in your vehicle. Some third-party apps require a separate account and, in some cases, a paid subscription for in-vehicle access.

Settings

Touch the Settings icon to display the Settings menu. See *Settings* ⇨ *162*.

Infotainment System Reboot

Just like a smartphone, the infotainment system can be rebooted .

1. Place the vehicle in park.
2. Press and hold the End Call button on your steering wheel for about 20 seconds. A service screen pop up may appear. You do not need to select any options.
3. Continue to hold the End Call button until the center display turns off.

After about 10 seconds, a welcome screen will appear and the infotainment system will reboot.

NOT FOR RESALE

Application Tray

The application tray is on the upper portion of the display and shows four applications by default.

Infotainment Display Features

Infotainment display features show on the display when available. When a feature is unavailable, it may be disabled. When a feature is touched, it may highlight.

Infotainment Gestures

Use the following finger gestures to control the infotainment system.

Touch/Tap

Touch/tap is used to select an icon or option, activate an application, or change the location inside a map.

Touch and Hold

Touch and hold can be used to move or delete an application.

Drag

Drag is used to move applications on the infotainment home screen, or to pan the map. To drag the item, it must be held and moved along the display to the new location. This can be done up, down, right, or left. This feature is only available when vehicle is parked and not in motion.

Nudge

Nudge is used to move items a short distance on a list or a map. To nudge, hold and move the selected item up or down to a new location.

Fling or Swipe

Fling or swipe is used to scroll through a list, pan the map, or change page views. Do this by placing a finger on the display then moving it rapidly up and down or right and left.

Spread

Spread is used to zoom in on a map, certain images, or a web page. Place finger and thumb together on the display, then move them apart.

Pinch

Pinch is used to zoom out on a map, certain images, or a web page. Place finger and thumb apart on the display, then move them together.

Cleaning High Gloss Surfaces, Vehicle Information, and Radio Displays

See *Interior Care* ⇨ *370*.

Radio

AM-FM Radio

Playing the Radio

From the infotainment home screen, touch the Audio icon to display the now playing screen for the active audio source. Touch the source button such as FM, AM, or SiriusXM (if equipped) in the left corner to change your source.

Finding a Station

Seeking a Station

From the AM or FM screen, touch the back or forward buttons to search for the previous or next strong station.

Tune

Touch on the infotainment display to enter the Tune screen. Enter a frequency using the keypad.

Touch the ☆ to save the station as a favorite.

NOT FOR RESALE

Entering a valid AM or FM frequency will automatically tune to the new station but not close the Tune screen.

Touch the Go button or frequency in the list to begin playing the station. The tune page will close and return to the now playing screen.

Storing Radio Station Favorites

Saved favorite stations will show at the bottom of the now playing screen.

AM, FM, or SiriusXM favorites can be stored by pressing and holding a favorite slot.

Audio Settings

Audio settings vary by region.

From the now playing screen, touch and the following may display.

Sound

- Equalizer
- Fade/Balance
- Sound Mode (if equipped)

Bose AudioPilot

If equipped, adjusts the volume based on the noise inside the vehicle and vehicle speed.

Manage Radio Favorites

Displays a list of audio favorites that can be moved or deleted.

Radio Text (RDS)

When on, radio station name and messages from radio stations will be shown.

Radio Text Category

When on, category information about current radio content will be shown.

Radio Data System (RDS)

RDS relies on receiving specific RDS information from radio stations and only works when the information is available. It is possible that a radio station could broadcast information that causes the radio to work improperly.

In addition, RDS features are region and country of sale specific. This means specific RDS content may not be available in your listening area or in the country you operate the vehicle.

To turn RDS features on or off, see "Audio Settings" previously.

The following RDS features may be supported by radio broadcasters in your listening area:

RDS features

- Display radio station name
- Display messages from radio stations
- Provide radio station category information (when available)

Satellite Radio

SiriusXM Radio Service

If equipped, vehicles with a SiriusXM radio subscription can receive SiriusXM programming.

SiriusXM radio has a wide variety of programming and commercial-free music, coast to coast, in digital-quality sound. In the U.S., see www.siriusxm.com or call 1-888-601-6296. In Canada, see www.siriusxm.ca or call 1-888-539-7474.

When SiriusXM is active, the channel name, number, song title, and artist appear on the display.

NOT FOR RESALE

SiriusXM with 360L

SiriusXM with 360L interface has enhanced in-vehicle listening experience for subscribers. The experience now offers more categories and system-learned recommendations toward discovering more personalized content.

To use the full SiriusXM 360L program, including streaming content and listening recommendations, OnStar Connected Access is required and Terms and Conditions must be accepted. No paid data subscription is required. Connected vehicle services vary by model and require a complete working electrical system, cell reception, and GPS signal.

Reference the SiriusXM user guide for use and subscription information.

Playing SiriusXM Content

Touch ◀◀, II, ▶ or ▶▶ on the audio now playing screen to rewind, pause, play, or fast forward content.

Finding a Channel

From the SiriusXM now playing screen, touch ◁CH or CH▷ to open the SiriusXM tuner channel list.

To directly tune to a channel, touch the Tune icon to enter a channel number using the keypad.

Browsing Content

Touch ☰ to view different browsing content, including:

Channels, Music, On Demand shows and episodes, Sports and News content.

SiriusXM Settings

From the SiriusXM now playing screen, touch the user settings icon to display the SiriusXM settings.

The settings include subscription information, help and support, and listener preferences.

Radio Reception

Unplug any electronic devices from the accessory power outlets if there is static interference.

FM

FM signals only reach about 16 to 65 km (10 to 40 mi). Although the radio has a built-in electronic circuit that automatically works to reduce interference, some static can occur, especially around tall buildings or hills, causing the sound to fade in and out.

AM

The range for most AM stations is greater than FM, especially at night. The longer range may also cause station frequencies to interfere with each other. Storms and power lines may also interfere with radio reception. Try reducing the treble on the radio if static interference occurs.

SiriusXM Satellite Radio Service

If equipped, SiriusXM Satellite Radio Service provides digital radio reception. Tall buildings or hills can interfere with satellite radio signals, causing the sound to fade in and out. In addition, traveling or parking under heavy foliage, bridges, garages, or tunnels may cause loss of the SiriusXM signal for a period of time. Some cellular services may interfere with SiriusXM reception causing signal loss.

Mobile Devices

Making or receiving calls, charging, or just having a mobile device on may cause static interference. Unplug or turn off any mobile devices if this happens.

NOT FOR RESALE

Multi-Band Antenna

The multi-band antenna may be used for radio, navigation, and other communication systems, depending on the equipped options. To ensure clear reception, keep the antenna clear of obstructions like snow and ice. An open sunroof or roof-mounted cargo can also affect reception.

Audio Players

Avoiding Untrusted Media Devices

Avoid using untrusted mobile and USB media devices that may negatively affect system operation or performance.

USB Port

Caution

To avoid vehicle damage, unplug all accessories and disconnect all accessory cables from the vehicle when not in use. Accessory cables left plugged into the

(Continued)

Caution (Continued)

vehicle, unconnected to a device, could be damaged or cause an electrical short if the unconnected end comes in contact with liquids or another power source such as the accessory power outlet.

The vehicle may be equipped with multiple USB ports. Music may be played from a connected USB device. Data enabled ports are labeled as and may also be used for charging. Charging only ports are labeled as .

USB Audio

To play music:

1. On the audio now playing screen, select Source> USB.
2. If there is no device connected, connect the device.
3. Supported media content will appear on the display.

Bluetooth Audio

A connected Bluetooth mobile device can play music.

Use the infotainment controls to adjust volume and select songs. Check the volume setting on the infotainment system or the connected mobile device if Bluetooth is selected and no volume is present.

To play music via Bluetooth:

1. On the audio now playing page, touch source and select the desired Bluetooth mobile device.
2. If there is no mobile device connected, follow the screen prompts to pair the device.
3. Supported media content will appear on the display.

Manage Bluetooth Devices

Managing Bluetooth devices allows you to add, delete, or select another paired mobile device.

Only one Bluetooth mobile device can be active at a time.

Some mobile devices support sending Bluetooth music information to display on the radio. For more information about supported Bluetooth features, visit your brand website. See *Online Account and Customer Support* ➪ *385* for details.

NOT FOR RESALE

Navigation

Using the Navigation System

Google Maps provides the navigation software. This section offers a general overview and may change over time. For the latest functional information, see g.co/mapsincar.

Accept the Terms and Conditions to use.

Internet Connectivity

A subscription data plan enables Google Maps' full functionality, including offline map availability. With an applicable connected services plan, Google Maps automatically downloads offline maps before losing connectivity, allowing for offline use in dead zones while driving.

Profiles

Sign in to a Google Account to receive personalized service. Google Account information appears as available.

To log into a profile, see Accounts under *Settings* ⇨ *162*.

Voice Assistant

If equipped, Google Maps can be controlled by voice commands. See *Voice Assistant* ⇨ *155*.

Language and Units

To change the language and units, see *Settings* ⇨ *162*.

Mute Settings

During active route guidance, Google Maps provides audible voice directions and traffic alerts or mutes them when needed. In the Google Maps app, access the options by selecting Settings, then Mute settings. Alternatively, mute audible voice directions and traffic alerts by tapping the sound icon on the navigation map screen during active navigation.

Compass

The Google Maps orientation can be changed between the direction currently traveling, pointing north, and route overview. Select the compass to switch between these options.

To recenter the map to the current location, select the location icon.

Super Cruise

If equipped, Super Cruise highlights routes in a specific outline. See *Super Cruise* ⇨ *238*.

Electric Vehicle (EV) Features with Google Maps

When vehicle data is shared with Google, some of the Maps features for EVs are as follows:

- Estimated battery charge level at arrival
- Estimated minimum charging time in order to reach destination

If the vehicle needs to be charged to reach a destination, charging stations may automatically be added to a route.

Maps

Auto-Downloaded Maps

Google Maps downloads maps automatically for use when not connected to the Internet. Offline maps make map data available to vehicle features regardless of connectivity.

To turn on auto-download:

1. Open Google Maps.
2. Touch the Settings icon.

NOT FOR RESALE

3. Touch Privacy center, then select Offline maps.
4. Select Auto-download offline maps.
5. Check the Internet connection and wait for the download to finish.

Downloading Offline Maps

1. Open Google Maps.
2. Touch Settings, then Offline maps.
3. Touch the Select your own map square icon.
4. Adjust the map to cover the desired area to download.
5. Touch Download.

Navigation Symbols

The following are the most common symbols that may appear in Google Maps.



This indicates the vehicle's current location and direction on the map.



The destination pin marks the location of the final destination. Touch the pin to view the destination address or to add it or remove it from the Favorites list. Hide the information by touching the pin one more time. It will automatically time out if no action is taken.

A second pin in the menu is the route overview. Touch this pin to show more details of the destination or to remove the destination.

Destination

Searching for a Destination

A destination can be searched using Google Assistant.

To search for a destination without Google Assistant:

1. Open Google Maps.
2. Touch the Search field.
3. Enter the destination.
4. Touch the Navigation icon.

Alternate Routes

Alternate routes are displayed as separate lines. While in either Turn-by-Turn navigation or on the route overview, touch the suggested alternate route.

Adding a Stop on Route by Voice

1. While in Turn-by-Turn navigation, touch the Search icon at the bottom.
2. Touch the Google Assistant mic icon and say the destination to search by voice.
3. Select the desired search result from the list.
4. Touch the Add stop icon.

Adding a Stop on Route by Category

1. While in Turn-by-Turn navigation, touch the Search icon at the bottom.
2. Select a category.
3. Select the desired search result from the list.
4. Touch the Add stop icon.

NOT FOR RESALE

Adding a Home or Work Address

To edit a home or work address, an account must be logged in. See Profiles and Accounts under *Settings* ⇨ *162*.

1. Open Google Maps.
2. Touch Settings, then touch Edit home or work.
3. Enter the address.

Search by Category

Destinations can be searched by category, such as restaurant or grocery store.

1. Open Google Maps.
2. Touch the search bar.
3. Touch Categories, then select a category.
4. Touch the desired location, then touch the Navigation icon.

Avoid Tolls, Highways, or Ferries

1. Open Google Maps.
2. Touch the Settings icon.
3. Select Route options.
4. Select the desired options and then touch X to close.

An Alternative Way for General Route Options

1. During active route guidance, touch Route Overview.
2. Select Route options.
3. Select the desired option and then touch X to close.

Traffic Layers

1. Open Google Maps.
2. Touch the Settings icon.
3. Touch Traffic to turn on or off.

Global Positioning System (GPS)

GPS uses satellite and various vehicle signals to determine the current vehicle position for the navigation system.

Interference from the satellite condition, road configuration, condition of the vehicle, and/or other circumstances can affect the navigation system's ability to determine the accurate position of the vehicle.

This system might not be available or interference can occur if any of the following are true:

- Signals are obstructed by tall buildings, trees, large trucks, or a tunnel.
- Satellites are being repaired or improved.

For more information if GPS is not functioning properly, see *Problems with Route Guidance* ⇨ *155*.

Vehicle Positioning

At times, the position of the vehicle on the map could be inaccurate due to one or more of the following reasons:

- The road system changes.
- You are driving on slippery road surfaces such as sand, gravel, or snow.
- You are traveling on winding roads or long, straight roads.
- The vehicle is approaching a tall building or a large vehicle.
- The vehicle is running parallel to a freeway on surface streets.
- A vehicle carrier or ferry is transferring the vehicle.

NOT FOR RESALE

- The current position calibration is set incorrectly.
- You are traveling at high speed.
- You are changing directions often, or the vehicle is on a turntable in a parking lot.
- You are driving into or exiting out of a parking lot, garage, or a lot with a roof.
- The vehicle is unable to receive a GPS signal.
- The vehicle has a roof carrier.
- The vehicle has tire traction devices.
- The vehicle has newly replaced or worn tires.
- The tire pressure is incorrect.
- The navigation system is using map data for the first time after an update.
- The 12-volt battery has been disconnected for several days.
- You are driving in heavy traffic at low speeds and the vehicle is stopping and starting repeatedly.

Problems with Route Guidance

Incorrect route guidance can occur under one or more of the following conditions:

- Missing a turn on the indicated road.
- Turning at an intersection.
- Recent changes to roads, or roads not listed in Maps.

Additionally, route guidance may be unavailable if:

- Using automatic rerouting for the next right or left turn.
- Regulations (time, season, construction zone, etc.) prohibit vehicle entry.
- The route is not found.

When navigating to a destination that does not pass through the set waypoint, the system may automatically recalculate the route to return to the waypoint.

To recalibrate the map position, park in a safe, open area free from large obstructions, with the vehicle on for two to five minutes until the position updates.

Voice Assistant

If equipped, the vehicle's built–in Google Assistant or Gemini allows for hands-free use of media and messaging, navigation and climate control functionality in the vehicle. To activate, quickly press and release on the steering wheel, touch Google Assistant or Gemini on the infotainment app screen, or use the wake words “Hey Google” or “OK Google.” Google Assistant or Gemini must be set as the default assistant for steering wheel and wake word activation to work.

However, not all features within these areas are supported by voice commands and requires the user to have a valid data subscription plan or be able to connect to an external Wi-Fi in order to use the Google Assistant or Gemini features.

Using Voice Assistants

Voice assistant becomes available once the system is initialized. This begins when the vehicle is turned on. Initialization may take a few moments.

NOT FOR RESALE

1. Quickly press and release on the steering wheel controls, touch Google Assistant or Gemini from the app screen on the infotainment display, or use the wake words “Hey Google” or “OK Google” to activate voice assistant. Google Assistant or Gemini must be set as the Default Assistant for the and the wake word options to work.
2. Clearly speak one of the commands described later in this section.

Canceling Google Assistant or Gemini

- Press on the steering wheel controls to cancel the Google Assistant or Gemini request.

Helpful Hints for Speaking Commands

Voice assistant identifies commands that are naturally stated in sentence form, or direct commands that state the application and the task.

For best results:

- Speak the command naturally, not too fast, not too slow.
- Use direct commands without a lot of extra words. For example, “Call <name> at work,” “Play” followed by the artist or song name, or “Play” followed by the radio station number.

Direct commands are more clearly understood by the system. An example of a direct command is “Call <number>.”

If a cell phone number was saved with a name and a place, the direct command should include both. For example “Call <name> at work.”

Voice Assistants for the Radio

When voice is started, the voice recognition commands for AM, FM, SiriusXM (if equipped), and media apps (if supported) are available.

“Play <AM frequency> AM”: Tune to the radio station frequency identified in the command (like “nine fifty”).

“Play <FM frequency> FM”: Tune to the radio station frequency identified in the command (like “one oh one point one”).

“Play channel <SiriusXM channel number> on SiriusXM” : Tune to the SiriusXM radio station channel number identified in the command. This command may require an online connection.

“Play <SiriusXM channel name> on Sirius XM”: Tune to the SiriusXM radio station channel name identified in the command. This command may require an online connection.

“Play <Media> on <Audio Source>” : Play media like a song or channel using a specified audio source such as Pandora or Spotify. This command may require an online connection.

Voice Assistants for Bluetooth

Make sure the phone is paired using Bluetooth to use the phone related voice commands.

“Call <contact name>”: Initiate a call to a stored contact. The command may include location if the contact has location numbers stored.

“Call < phone number>”: Initiate a call to a phone number of seven digits or 10 digits.

“Send a message to <contact name>”: Send a message to a stored contact.

Voice Assistants for Navigation

Navigation commands can be used to start, cancel route, or add way points/POI.

“Navigate to <destination address>”: Initiate navigation to the address in the command.

“Find a <Place of Interest>”: Find and initiate navigation to a POI in the command.

NOT FOR RESALE

"Add <destination> on my way": Adds a waypoint to the current route.

"Take me home": Starts navigation to Home location set in Google maps.

Onboard Vehicle Commands

These commands can be used to adjust vehicle temperature, control window defrosters, etc.

"Turn on the A/C": Turns on the air conditioning.

"Set temperature to <desired number> degrees": Set to a specific temperature inside your vehicle.

Phone Assistant Voice Recognition

While a mobile phone is connected via Bluetooth, press and hold on the steering wheel controls until you hear a response from the phone's voice assistant , which will launch the voice assistant on the connected mobile phone (e.g., Google Assistant, Google Gemini, Siri, etc.).

Google Gemini

If equipped, Google Gemini provides a smarter, more intuitive AI assistant. With Gemini, you can speak naturally without memorizing commands or repeating context.

Example commands to try:

Communication: "Hey Google, send a message to [name] to let her know that I'm bringing dessert and add a cupcake emoji to it."

Entertainment: "Hey Google, can you help me create a road trip playlist? I want something upbeat, about 3 hours long, that's good for both me and the kids."

Navigation : "Hey Google, take me to the nearest post office. Oh, and add a stop for some good coffee along the way."

Gemini Live: Live is a conversational experience with Gemini. Just tap the Gemini Live button from the Gemini voice plate or say, "Hey Google, let's talk" to start a free-flowing conversation or say "Can you help us brainstorm ideas for a family holiday? Somewhere warm, full of adventure, without a long flight." To end a live session. Tap the "X" on the voice plate, for use the end call button on the steering wheel.

Vehicle Knowledge: Google Gemini is a general AI assistant. It may not be knowledgeable about every GM vehicle, and some features or responses may vary by vehicle and availability. For vehicle-specific information, always refer to this Owner's Manual and the in-vehicle displays.

Phone

Bluetooth (Overview)

The Bluetooth-capable system can interact with many mobile devices to:

- Place and receive calls in a hands-free mode.
- Share the device's address book or contact list with the vehicle.
- Stream audio (music, podcasts).
- Notify receipt and reply to text messages depending on phone type.

To minimize driver distraction, before driving, and with the vehicle parked:

- Become familiar with the features of the mobile device. Organize the phone book and contact lists clearly and delete duplicate or rarely used entries.
- Review the controls and operation of the infotainment system.
- Pair mobile device(s) to the vehicle. The system may not work with all mobile devices. See "Pairing" later in this section.

Vehicles with a Bluetooth system can use a Bluetooth-capable mobile device with a Hands-Free Profile to make and receive

NOT FOR RESALE

phone calls. The infotainment system and voice recognition are used to control the system. The system can be used while the vehicle is on . The range of the Bluetooth system can be up to 9.1 m (30 ft). Not all mobile devices support all functions and not all mobile devices work with the Bluetooth system. See *Online Account and Customer Support* ⇨ *385* for more information about compatible mobile devices.

Controls

Use the controls on the infotainment display and the steering wheel to operate the Bluetooth system.

Steering Wheel Controls

: Press and hold until you hear a response from the phone's voice assistant to start voice recognition on your mobile phone that is connected through Bluetooth. If there is an incoming call, then a press and release will answer the call.

: Press to end a call, decline a call, or cancel an operation. Press to mute or unmute the infotainment system when not on a call.

Infotainment System Controls

For information about how to navigate the menu system using the infotainment controls, see *Using the System* ⇨ *147*.

Audio System

When using the Bluetooth mobile device system, sound comes through the vehicle's front audio system speakers and overrides the audio system. The volume level while on a mobile device call can be adjusted by pressing the steering wheel controls or the volume controls for the infotainment system. The adjusted volume level remains in memory for later calls. The volume cannot be lowered beyond a certain level.

Bluetooth (Pairing and Using a Phone)

Pairing

A Bluetooth-enabled mobile device must be paired to the Bluetooth system and then connected to the vehicle before it can be used. See the mobile device manufacturer's user guide for Bluetooth functions before pairing the device.

Pairing Information

- Select the Phone icon on the infotainment app screen.
- If no mobile device has been paired, a message on the infotainment display will show the Manage Phones option. Select this option and the Phones screen will display. See “Pairing a Phone” later in this section.
- A mobile device with music capability can be paired to the vehicle as a phone and a music player at the same time.
- Up to 10 devices can be paired to the Bluetooth system.
- The pairing process is disabled when the vehicle is moving.
- Pairing only needs to be completed once, unless the pairing information on the mobile device changes or the phone is deleted from the system.
- If a previously paired mobile device is not connecting to the Bluetooth system, try forgetting the mobile device on the vehicle’s infotainment system and also

NOT FOR RESALE

forgetting the vehicle in the Bluetooth settings of the mobile device. Then repeat the pairing process.

- If multiple paired mobile devices are within range of the system, the system connects to the paired mobile device that is set to First to Connect. If there is no mobile device set to First to Connect, it will connect to the mobile device which was used last. To connect to a different paired mobile device, see "Connecting to a Different Phone" later in this section.

Pairing a Phone

1. Make sure Bluetooth has been enabled on the mobile device before starting the pairing process.
2. Select the Phone icon on the infotainment app screen.
3. If a mobile device has been previously added, select Settings > Connections > Phones to reach the device manager. From the device manager, select "Add Phone." If a phone has been previously added, the "Add Phone" card will just be a "+" button.
4. Select Manage Phones to display the Phones screen.
5. Select Add Phone.

   If a mobile device has been previously added or disconnected, the "Add Phone" card will just be a "+" card.
6. Select the phone name on the infotainment screen of the vehicle name on the phone.
7. The code on both the mobile device and infotainment display need to be acknowledged for pairing to be successful.
8. Follow the instructions on the mobile device to confirm the six-digit code showing on the infotainment display and select Pair. The codes on the mobile device and infotainment display need to be acknowledged for pairing to be successful.
9. If a previously paired mobile device is not connecting to the Bluetooth system, try forgetting the mobile device on the vehicle's infotainment system and also forgetting the vehicle in the Bluetooth settings of the mobile device.
10. If the vehicle name does not appear on your mobile device under the "other devices" or "available devices" menu, there are a few ways to start the pairing process over:
    - Turn Bluetooth off then back on, on your mobile device.
    - Go back to the beginning of the Phone menus on the infotainment display and restart the pairing process.
    - Turn the mobile device off and then back on.
    - Reset the mobile device, but this step should be done as a last effort.
11. If the mobile device prompts to accept connection or allow phone book download, select Always Accept and Allow. The phone book may not be available if not accepted.
12. To pair additional mobile devices, select Settings > Connections > Phones.

First to Connect Paired Phones

If multiple paired mobile devices are within range of the system, the system connects to the paired phone that is set as First to Connect. To enable a paired mobile device as the First to Connect phone:

1. Make sure the mobile device is turned on.
2. Select the Settings icon on the infotainment app screen.

NOT FOR RESALE

3. Select Connections.
4. Select Phone.
5. Select Options under the connected phone.
6. Select First to Connect from the phone's settings menu and set First to Connect to On.

Phones and mobile devices can be added, removed, connected, and disconnected. A sub-menu will display whenever a request is made to add or manage phones and mobile devices.

Accessing the Device List Screen

There are two ways to access the device list screen:

Using the Settings Icon

1. Select the Settings icon on the infotainment app screen or the Settings icon on the application tray near the left of the display.
2. Select Connections.
3. Select Phones.

Using the Phone Icon

1. Select the Phone icon on the infotainment app screen or the Phone icon on the application tray near the left of the display.
2. Select on the Phones screen.
3. Select Connected Phone.

Disconnecting a Connected Phone

To disconnect a phone:

1. Open the Device List Screen. See "Accessing the Device List Screen" previously in this section.
2. Select Option on the phone card to show the phone's or mobile device's settings.
3. Select the prompt to disconnect the phone.

Deleting a Paired Phone

To delete a paired phone:

1. Open the Device List Screen. See "Accessing the Device List Screen" previously in this section.
2. Select Option on the phone card to show the phone's or mobile device's settings.
3. Select Forget Phone.

Connecting to a Different Phone

To connect to a different phone, the new phone must be in the vehicle and paired to the Bluetooth system.

To connect to a different phone:

1. Open the Device List Screen. See "Accessing the Device List Screen" previously in this section.
2. Select the new phone you want to connect to from the list of available phones. See "First to Connect Paired Phones" previously in this section.

Switching to Handset or Hands-Free Mode

To switch between handset or hands-free mode:

- While the active call is hands-free, select the Audio Output option, then select Phone to switch to the handset mode.

  The mute icon will not be available or functional while Handset mode is active.

- While the active call is on the handset, select the Audio Output option, then select Car Speakers to switch to the hands-free mode.

Making a Call Using Contacts

Calls can be made through the Bluetooth system using personal phone contact information for all phones that support the Phone Book feature. Become familiar with the phone settings and operation and that the

NOT FOR RESALE

phone is set to allow the sharing of contacts over Bluetooth with the vehicle. Verify the phone supports this feature and that the phone is set to allow the sharing of contacts over Bluetooth with the vehicle.

The Contacts menu accesses the phone book stored in the phone.

To make a call using the Contacts menu:

1. Select the Phone icon on the infotainment app screen or on the application tray near the left of the display.
2. Select Contacts.

   If a contact has more than one assigned number, a window will appear with the option to choose a phone number from a list. Select the preferred number to call and then confirm if the selection is "Just once" or "Always." By choosing "Always" the selection made will remain the default number assigned to this contact for as long as the phone is connected to the vehicle.
3. There are two methods to search for contacts:
   - Search bar – Select the search icon on the top right of the Phones window and type the name or number of the contact on the keyboard. Search results will be displayed corresponding to the user input. Select the name to call.
   - Scroll – Select the list and scroll, or use the scrollbar on the left side of the Phones window. Select the name to call.

Making a Call Using the Recents Menu

The Recents menu accesses the recents call list from your phone.

To make a call using the Recents menu:

1. Select the Phone icon on the infotainment app screen or on the application tray near the left of the display.
2. Select Recents.
3. There are two methods for placing a call:
   - Select the name or phone number to call.
   - Select the contact card to the right of the name or phone number. Within the contact card select the phone number to call.

Making a Call Using the Keypad

To make a call by dialing the numbers:

1. Select the Phone icon on the infotainment app screen or on the application tray near the left of the display.
2. Select Keypad and enter a phone number.
3. There are two methods for placing a call:
   - Select the phone icon in the keypad.
   - Select the contact name to the right of the keypad. If the phone number is stored with a contact, the contact will appear as the number is typed into the keypad.

Searching Contacts Using the Keypad

To search for contacts using the keypad:

1. Select the Phone icon on the infotainment app screen.
2. Select Keypad and enter partial phone numbers or contact names using the digits on the keypad to search.

NOT FOR RESALE

Results appear on the right side of the display. Select one to place a call.

Accepting or Declining a Call

When an incoming call is received, the infotainment system mutes and a ring tone is heard in the vehicle.

Accepting a Call

To Accept a call, select Answer on the infotainment display.

Declining a Call

To decline a call, press on the steering wheel controls or Decline on the infotainment display.

Call Waiting, Merging, and Conferencing

Call waiting, merging, and conferencing must be supported on the Bluetooth mobile device and enabled by the wireless service carrier to work.

When an incoming call is received during an active call, press on the steering wheel controls or "Answer" from the infotainment display. This will answer the incoming call and place the active call on hold.

To switch between the calls, select the Switch icon on the infotainment display.

To merge the calls, select "Merge" within the Active Call Screen on the infotainment display. This creates a three-way conference. If another call is received during a three-way conference, it can be answered, but it will place the conference on hold.

Making a Call Using Favorites

1. Select the Phone icon on the infotainment app screen or on the application tray near the left of the display.
2. Select Favorites.
   - The vehicle can sync up to five favorites from the phone.
   - The vehicle can also store up to five additional contacts as vehicle favorites. These will be stored for as long as the phone is paired and connected. If the phone is unpaired/ forgotten by the vehicle, the vehicle favorites will be deleted.

To add a favorite for the vehicle:

1. Select "Add Favorite."
2. Select a contact from the Phone Book.
3. Select the star icon next to the phone number to add as a favorite.

Ending a Call

- Press on the steering wheel controls.
- Select on the infotainment display, next to a call, to end only that call.

Dual Tone Multi-Frequency Tones

The in-vehicle Bluetooth system can send numbers during a call. This is used when calling a menu-driven phone system. Use the Keypad to enter the number.

Settings

To access the Settings menus:

1. Touch Settings on the infotainment home screen.
2. Touch the desired feature setting.
3. Touch the options on the infotainment display to change a setting.
4. Touch < to go back.

The Settings menu may contain the following:

NOT FOR RESALE

Connections

The menu may contain the following:

Devices

Allows connecting to a different cell phone or mobile device source, disconnecting a cell phone or media device, or deleting a cell phone or media device.

Wi-Fi Networks

Shows connected and available Wi-Fi networks.

Wi-Fi Hotspot

Allows adjustment of different Wi-Fi features.

Vehicle-to-Phone Sharing

Allows GM apps to use vehicle data on the listed phones shown.

Trusted Device

Allows for setting a phone as your trusted device to establish a secure communication channel between your phone and vehicle that enables convenient features like instant profile unlocking and account sign in. When nearby, your trusted device is recognized automatically via a unique Bluetooth connection.

Vehicle

The menu may contain the following:

Audio Settings

Allows adjustment of different audio settings.

Drive Mode Customization

See *Driver Mode Control* ⇨ *207*.

Teen Driver

See *Teen Driver* ⇨ *165*.

Rear Seat Reminder

Allows for an audible alert and a message when the rear door has been opened before or during operation of the vehicle.

Buckle to Drive

See *Buckle To Drive* ⇨ *51*.

Turn Signal Activated View

Allows adjustment of Turn Signal Activated View settings.

Trailer Length Indicator

Allows adjustment of Trailer Length Indicator.

Super Cruise Lane Change

See *Super Cruise* ⇨ *238*.

Climate and Air Quality

Allows adjustment of different climate settings.

Collision/Detection Systems

Allows adjustment of different driver assistance system settings.

Comfort and Convenience

Allows adjustment of different comfort and convenience settings.

Driver Attention Assist

See *Super Cruise* ⇨ *238*.

Lighting

Allows adjustment of different lighting settings.

Power Door Locks

Allows adjustment of different door lock settings.

NOT FOR RESALE

Remote Lock, Unlock, and Start

Allows adjustment of different remote lock settings.

Ride Height

Allows adjustment of different ride height settings.

Power Assist Steps

Allows adjustment of different running board settings.

Seating Position

Allows adjustment of different seating position settings.

Suspension

Allows adjustment of different suspension settings.

Trailering

Allows adjustment of different trailering settings.

Transport Mode

Allows adjustment of transport mode settings.

Notifications

Shows a list of installed apps and the permissions used.

Apps

Shows app settings and information.

Date/Time

Allows setting of the clock.

Display

Allows adjustment of the infotainment display.

Sounds

Allows adjustment of the infotainment system sounds.

Profiles and Accounts

Modifies the infotainment system's profiles and provides access to the accounts assigned to the currently active profile. Profiles can be setup and/or modified as Admin profiles or Guest profiles.

Privacy

Allows adjustment of the infotainment privacy settings.

Accessibility

Shows the accessibility information on the infotainment system.

Assistant and Voice

Shows the assistant and voice settings.

Security

Allows adjustment of the infotainment security settings.

System

The menu may contain the following:

Language

This will set the display language used on the infotainment display.

Keyboard and Speech

Touch to change keyboard and speech settings.

Units

Touch to change units settings.

NOT FOR RESALE

Reset Options

Touch to change reset settings. The submenu "Erase Infotainment Data" is only accessible if the profile logged into the vehicle is configured as an "admin".

TTY Mode

Touch to change TTY mode settings.

Storage

Touch to view storage settings.

About

Touch to view the infotainment system software information.

Legal Information

Touch to view legal and license information.

Updates

See *How Your Vehicle is Updated* ⇨ *402*.

Google

Allows adjustment of the Google settings.

Teen Driver

If equipped, this allows multiple keys to be registered for beginner drivers to encourage safe driving habits. When the vehicle is started with a Teen Driver key, it will automatically activate certain safety systems, allow setting of some features, and limit the use of others. The Report Card will record vehicle data about driving behavior that can be viewed later. When the vehicle is started with a Teen Driver key, the Driver Information Center displays a message that Teen Driver is active.

To access:

1. From the infotainment app screen, select Settings > Vehicle > Teen Driver.
2. Create a PIN by choosing a four-digit PIN. Re-enter the PIN to confirm. To change the PIN, touch Change PIN.

The PIN is required to:

- Set up/add or remove keys.
- Change Teen Driver settings.
- Change or clear the Teen Driver PIN.
- Access or delete Report Card data.

Set up/Add keys to activate Teen Driver and assign restrictions to the key:

Any vehicle key can be registered, up to a maximum of eight keys. Label the Teen Driver key to tell it apart from the other keys.

For a pushbutton start system:

1. Start the vehicle.
2. The vehicle must be in P (Park).
3. From the Settings menu, touch Vehicle and then Teen Driver.
4. Enter the PIN.
5. Place the remote key you wish to register in the transmitter pocket. See *Remote Key Operation* ⇨ *8* for transmitter pocket location. The key does not need to be the one that started the vehicle.
6. From the Teen Driver menu, touch Setup Keys or Add/Remove Teen Driver Keys.
    - If the remote key has not previously been registered, the option to add the key displays. Touch Add and a confirmation message displays. Teen Driver restrictions will be applied whenever this remote key is used to operate the vehicle.

NOT FOR RESALE

- If the remote key has already been registered, the option to remove the key displays. If Remove is touched, the remote key is no longer registered. A confirmation message displays, and Teen Driver restrictions will not be applied if this remote key is used to operate the vehicle.

In vehicles with a pushbutton start system, if a Teen Driver and a non-Teen Driver key are both present at start up, the vehicle will recognize the non-Teen Driver key to start the vehicle. The Teen Driver settings will not be active.

Manage Settings or Teen Driver Settings

Depending on the options of your vehicle, the following menu items may be displayed:

Buckle to Drive : When turned ON, Buckle to Drive prevents the driver from shifting out of P (Park) for a period of time after the brake pedal is pressed if the driver, or on some vehicles the detected passenger, has not buckled their seat belt. On some vehicles, Buckle to Drive is always ON when Teen Driver is active and is not configurable.

Audio Volume Limit : Allows a maximum audio volume to be set. Turn the audio volume limit on or off. Use the arrows to choose the maximum allowable level for the audio volume. On some infotainment systems, touch Set Audio Volume Limit to choose the maximum allowable audio volume level.

Set Audio Volume Limit : Use the arrows to choose the maximum allowable level for the audio volume.

Teen Driver Speed Limiter : Limits the maximum speed of the vehicle. When the speed limiter is turned on and the vehicle is started with a Teen Driver key, the Driver Information Center displays a message that the top speed is limited.

On certain vehicles, when the Speed Limiter is turned ON, the vehicle's maximum acceleration will be limited. The Driver Information Center will display a message that the acceleration is limited.

Teen Driver Speed Warning : Displays a warning in the Driver Information Center when exceeding a selectable speed. Turn the speed warning on or off and choose the desired speed warning level. The speed warning does not limit the speed of the vehicle. On some infotainment systems, touch Set Teen Driver Speed Warning to set the warning speed.

Set Teen Driver Speed Warning : Choose the desired speed warning level. The speed warning does not limit the speed of the vehicle.

When Teen Driver is Active:

- If equipped, the radio will mute when the driver seat belt, and in some vehicles the front passenger seat belt, is not buckled. The audio from any device paired to the vehicle will also be muted.
- An object placed on the front passenger seat, such as a briefcase, handbag, grocery bag, laptop, or other electronic device, could cause the passenger sensing system to falsely sense an unbuckled front passenger and mute the radio. If this happens, remove the object from the seat.
- Some safety systems, such as Automatic Emergency Braking, if equipped, cannot be turned off.
- The gap setting for Adaptive Cruise Control and alert timing for Forward Collision Alert, if equipped, cannot be changed.

NOT FOR RESALE

- When trying to change a safety feature that is not configurable in Teen Driver, the feature may be grayed out or removed from the infotainment menu, or the Driver Information Center will display a message indicating that Teen Driver is active and the action is not available.
- Super Cruise, if equipped, is not available.
- Do not tow a trailer if equipped with Automatic Emergency Braking.
- Daytime Running Lights or headlights are always on when the vehicle is shifted out of P (Park). Even if the headlight control is set to Off or , the Automatic Headlight System is engaged and ensures that either the Daytime Running Lights or headlights come on based on outside light level.

Report Card

The vehicle owner must secure the driver's consent to record certain vehicle data when the vehicle is driven with a registered Teen Driver key. There is one Report Card per vehicle. Data is only recorded when a registered Teen Driver key is used to operate the vehicle.

The Report Card data is collected from the time Teen Driver is activated or the last time the Report Card was reset. The following items may be recorded:

- Distance Driven – the total distance driven.
- Maximum Speed – the maximum vehicle speed detected.
- Overspeed Warnings – the number of times the speed warning setting was exceeded.
- Wide Open Throttle – the number of times the accelerator pedal was pressed nearly all the way down.
- Forward Collision Alerts (if equipped) – the number of times the driver was notified when approaching a vehicle ahead too quickly and at potential risk for a crash.
- Forward Automatic Braking, also called Automatic Emergency Braking (if equipped) – the number of times the vehicle detected that a forward collision was imminent and applied the brakes.
- Reverse Automatic Braking (if equipped) – the number of times the vehicle detected that a rearward collision was imminent and applied the brakes.
- Traction Control – the number of times the Traction Control System activated to reduce wheel spin or loss of traction.
- Stability Control – the number of events which required the use of electronic stability control.
- Antilock Braking System Active – The number of Antilock Brake System activations.
- Tailgating Alerts (if equipped) – the number of times the driver was alerted for following a vehicle ahead too closely.

Report Card Data

Cumulative Data is saved for all trips until the Report Card is reset or until the maximum count is exceeded. If the maximum count is exceeded for a Report Card line item, that item will no longer be updated in the Report Card until it is reset. Each item will report a maximum of 1,000 counts. The distance driven will report a maximum of 64,374 km (40,000 mi).

To delete Report Card data, do one of the following:

- From the Report Card display, touch Reset.

NOT FOR RESALE

- Touch Clear PIN and All Teen Driver Keys from the Teen Driver menu. This will also unregister any Teen Driver keys and delete the PIN.

Forgotten PIN

See your dealer to reset the PIN.

Trademarks and License Agreements



"Made for iPhone" means that an electronic accessory has been designed to connect specifically to iPhone, and has been certified by the developer to meet Apple performance standards. Apple is not responsible for the operation of this device or its compliance with safety and regulatory standards. Please note that the use of this accessory with iPhone may affect wireless performance. iPhone is a trademark of Apple Inc., registered in the U.S. and other countries.



Android is a trademark of Google LLC.



Trial length and service availability may vary by model, model year, or trim. Service will automatically stop at the end of your trial subscription period unless you decide to continue service. If you do not wish to enjoy your trial, you can cancel by calling the number below. All SiriusXM services require a subscription, each sold separately by SiriusXM after the trial period. Service subject to the applicable SiriusXM Customer Agreement and Privacy Policy, visit www.siriusxm.com (USA) or www.siriusxm.ca (Canada) to see complete terms and how to cancel which includes calling 1-866-635-2349 (USA) or 1-888-539-7474 (Canada). Some services and features are subject to device capabilities and location availability. Content varies by SiriusXM subscription package. All fees, content, and features are subject to change.

SiriusXM with 360L: Some features, including streaming content and listening recommendations, require an active OnStar Connected Access plan and may vary by vehicle model. Content varies by SiriusXM subscription plan. GM connected vehicle services vary by vehicle model and require active service plan, working electrical system, cell reception, and GPS signal. See onstar.com for details and limitations.

SiriusXM, Pandora, Stitcher, and all related logos are trademarks of SiriusXM Radio Inc. and its respective subsidiaries.

SiriusXM satellite service is only available in the 48 contiguous United States (and Puerto Rico with limited availability) and Canada.

In Canada: Some deterioration of service may occur in extreme northern latitudes. This is beyond the control of SiriusXM.

NOT FOR RESALE

Explicit Language Notice: Channels with frequent explicit language are indicated with an "XL" after the channel name. Family-friendly packages are available by contacting SiriusXM:

- USA Customers — See www.siriusxm.com or call 1-888-601-6296.
- Canada Customers — See www.siriusxm.ca or call 1-877-438-9677.

It is prohibited to copy, decompile, disassemble, reverse engineer, hack, manipulate, or otherwise make available any technology or software incorporated in receivers compatible with the SiriusXM Satellite Radio System or that support the SiriusXM website, the Online Service, or any of its content.

General Requirements:

1. A License Agreement from SiriusXM is required for any product that incorporates SiriusXM Technology and/or for use of any of the SiriusXM marks to be manufactured, distributed, or marketed in the SiriusXM Service Area.
2. For products to be distributed, marketed, and/or sold in Canada, a separate agreement is required with SiriusXM Canada Inc.



TouchSense Technology and TouchSense System 1000 Series Licensed from Immersion Corporation. TouchSense System 1000 is protected under one or more of the U.S. Patents at the following address www.immersion.com/patent-marking.html and other patents pending.

Bose

Bose AudioPilot and Bose Centerpoint surround are registered trademarks of Bose Corporation in the U.S. and other countries.

Bluetooth

The Bluetooth word mark and logos are owned by the Bluetooth SIG, Inc. and any use of such marks by General Motors is under license. Other trademarks and trade names are those of their respective owners.

Java

Java is a registered trademark of Oracle and/or its affiliates.

MPEG4–AVC (H.264)

THIS PRODUCT IS LICENSED UNDER THE AVC PATENT PORTFOLIO LICENSE FOR THE PERSONAL AND NON-COMMERCIAL USE OF A CONSUMER TO (i) ENCODE VIDEO IN COMPLIANCE WITH THE AVC STANDARD ("AVC VIDEO") AND/OR (ii) DECODE AVC VIDEO THAT WAS ENCODED BY A CONSUMER ENGAGED IN A PERSONAL AND NON-COMMERCIAL ACTIVITY AND/OR WAS OBTAINED FROM A VIDEO PROVIDER LICENSED TO PROVIDE AVC VIDEO. NO LICENSE IS GRANTED OR SHALL BE IMPLIED FOR ANY OTHER USE. ADDITIONAL INFORMATION MAY BE OBTAINED FROM MPEG LA, L.L.C. SEE HTTPS://WWW.MPEGLA.COM.

VC-1

THIS PRODUCT IS LICENSED UNDER THE VC-1 PATENT PORTFOLIO LICENSE FOR THE PERSONAL AND NON-COMMERCIAL USE OF A CONSUMER TO (i) ENCODE VIDEO IN COMPLIANCE WITH THE VC-1 STANDARD ("VC-1 VIDEO") AND/OR (ii) DECODE VC-1 VIDEO THAT WAS ENCODED BY A CONSUMER ENGAGED IN

NOT FOR RESALE

A PERSONAL AND NON-COMMERCIAL ACTIVITY AND/OR WAS OBTAINED FROM A VIDEO PROVIDER LICENSED TO PROVIDE VC-1 VIDEO. NO LICENSE IS GRANTED OR SHALL BE IMPLIED FOR ANY OTHER USE. ADDITIONAL INFORMATION MAY BE OBTAINED FROM MPEG LA, L.L.C. SEE HTTPS://WWW.MPEGLA.COM.

MPEG4–Visual

USE OF THIS PRODUCT IN ANY MANNER THAT COMPLIES WITH THE MPEG-4 VISUAL STANDARD IS PROHIBITED, EXCEPT FOR USE BY A CONSUMER ENGAGING IN PERSONAL AND NON-COMMERCIAL ACTIVITIES.

MP3

MPEG Layer-3 audio coding technology licensed from Fraunhofer IIS and Thomson.

WMV/WMA

This product includes technology owned by Microsoft Corporation and under a license from Microsoft Licensing, GP. Use or distribution of such technology outside of this product is prohibited without a license from Microsoft Corporation and/or Microsoft Licensing, GP as applicable.

NOT FOR RESALE

Climate Controls

Climate Control Systems
Dual Automatic Climate Control System ..171
Air Vents
Air Vents 173
Maintenance
Passenger Compartment Air Filter 174
Service 175

Climate Control Systems

Dual Automatic Climate Control System

The internal temperature of the vehicle can be controlled from the available options on the front console:

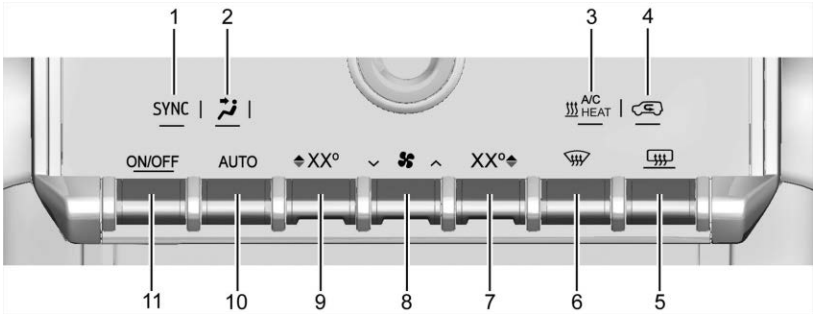

1. SYNC (Synchronized Temperature)
2. Air Delivery Mode Controls
3. A/C (Air Conditioning)/HEAT
4. Recirculation
5. Rear Window Defogger/Heated Outside Mirrors
6. MAX Defrost
7. Passenger Temperature Controls
8. Fan Control
9. Driver Temperature Controls
10. AUTO (Automatic Operation)
11. ON/OFF

Automatic Operation

The system automatically controls the fan speed, air delivery, air conditioning, and recirculation to heat or cool the vehicle to the desired temperature.

NOT FOR RESALE

When AUTO is selected, all four functions operate automatically. Each function can also be manually set. Functions not manually set are automatically controlled, even if the AUTO indicator is not highlighted. When enabled, the climate controls remain in AUTO mode through power cycles.

For automatic operation:

1. Press AUTO.
2. Set the temperature. Allow the system time to stabilize. Adjust the temperature as desired.

To improve efficiency and to cool the vehicle faster, recirculation may be automatically selected in warm weather.

Manual Operation

: Press up or down to increase or decrease fan speed. When OFF is selected, a small amount of air may still come out of the outlets. If any buttons are pressed, the climate control system will turn on and operate at the current setting.

Touch AUTO to return to automatic operation.

Driver and Passenger Temperature Control: The temperature can be adjusted separately for the driver and passenger.

SYNC: Touch to link the passenger temperature setting to the driver setting.

Air Delivery Mode Control: Touch to change the direction of the airflow. Any combination of , , or can be selected.

Changing the mode cancels the automatic operation and the system goes into manual mode. Touch AUTO to return to automatic operation.

: Air is directed to the windshield, outboard A/C outlets, and side window outlets.

: Air is directed to the A/C outlets.

: Air is directed to the floor outlets, with some air directed to the windshield, outboard A/C outlets, and side window outlets.

: Air is directed to the windshield and the fan runs at a higher speed if not already above a medium fan speed. This mode overrides the previous mode selected and clears fog or frost from the windshield quickly. When the control is pressed again, the system returns to the previous mode setting and fan speed.

For best results, clear any snow or ice from the windshield before defrosting.

: Touch to turn on recirculation. An indicator light comes on. Air is recirculated to quickly cool the interior of the vehicle. It can also be used to help reduce outside air and odors that enter the vehicle.

Avoid using recirculation for long periods of time in cold or damp conditions. Using recirculation in cold or damp conditions can result in window fogging.

HEAT : Touch to turn the automatic heater on or off. An indicator light comes on to show that the heater is enabled. If the fan is turned off, the heater will not run. Press AUTO to return to automatic operation.

A/C: Press to turn the air conditioning on or off. An indicator light comes on to show that the air conditioning is enabled. If the fan is turned off, the air conditioner will not run.

Rear Window Defogger

Caution
Using a razor blade or sharp object to clear the inside rear window can damage the rear window defogger. Repairs would (Continued)

NOT FOR RESALE

Caution (Continued)

not be covered by the vehicle warranty. Do not clear the inside rear window with sharp objects.

: If equipped, press to turn the rear window defogger on or off. An indicator light on the button comes on to show that the rear window defogger is on.

The rear window defogger only works when the vehicle is on. The defogger turns off if the vehicle is turned off.

If the vehicle is equipped with heated outside mirrors, they turn on when the rear window defogger button is on and help to clear fog or frost from the surface of the mirror. See *Heated Mirrors* ⇨ *32*.

If the vehicle is equipped with heated wiper parking, the feature will turn on when the rear window defogger button is on and help to clear frost from the wipers. See *Windshield Wiper/Washer* ⇨ *100*.

Remote Start Climate Control Operation: If equipped with remote start, the climate control system may run when the vehicle is started remotely. If equipped with heated or ventilated seats or a heated steering wheel, these features may come on during a remote start. See *Remote Start* ⇨ *13*, *Heated and Ventilated Front Seats* ⇨ *46*, and *Heated Steering Wheel* ⇨ *99*.

Sensors

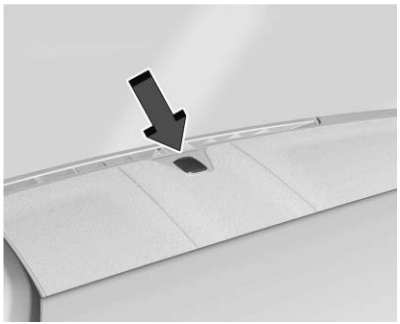

The solar sensor, on top of the instrument panel near the windshield, monitors the solar heat.

The climate control system uses the sensor information to adjust the temperature, fan speed, recirculation, and air delivery mode for best comfort.

Do not cover the sensor; otherwise the automatic climate control system may not work properly.

Afterblow Feature

If equipped, under certain conditions, the fan may stay on or may turn on and off several times after you turn off and lock the vehicle. This is normal.

ECO Climate

If equipped and enabled, ECO Climate may reduce airflow to unoccupied seats for energy efficiency. To turn ECO Climate off or on, select Settings > Vehicle > Climate and Air Quality > ECO Climate.

Air Vents

Use the sliding knobs on the center and side air vents to change the direction of the airflow.

Air vents blow warm air on the side windows in cold weather. If Floor, Defog, or Defrost modes are selected, a small amount of air will come from the vents closest to the window.

To close the front A/C vents, move the sliding knobs horizontally away from you.

To close the rear A/C vents, move the sliding knobs to the full inboard position.

NOT FOR RESALE

Operation Tips

- Clear away any ice, snow, or leaves from air inlets at the base of the windshield that could block airflow.
- Clear any snow off the hood to improve visibility and help decrease moisture drawn into the vehicle.
- Keep the path under the front seats clear of objects to help circulate the air inside of the vehicle more effectively.
- Use of non-GM approved hood deflectors can adversely affect system performance. Check with your dealer before adding equipment to the outside of the vehicle.
- Do not attach any devices to the air vent slats. Doing so restricts airflow and may cause damage to the air vents.

Maintenance

Passenger Compartment Air Filter

The filter reduces the dust, pollen, and other airborne irritants from outside air that is pulled into the vehicle.

The filter should be replaced as part of routine scheduled maintenance.



1. Open the lower glove box door completely.

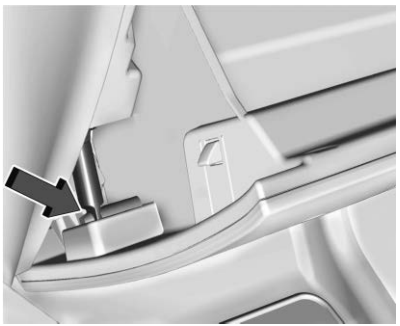

2. Push the dampener arm to the left until it releases the glove box.



3. Press the sides of the glove box door inward and rotate the door downward to remove.



NOT FOR RESALE

4. Pull lever on left side of the filter door and slide left, then remove the door. Remove the old filter.
5. Install the new air filter.
6. Reinstall the filter door.
7. Reverse the steps to reinstall the glove box.

See your dealer if additional assistance is needed.

Service

All vehicles have a label underhood that identifies the refrigerant used in the vehicle. The refrigerant system should only be serviced by trained and certified technicians. The air conditioning evaporator should never be repaired or replaced by one from a salvage vehicle. It should only be replaced by a new evaporator to ensure proper and safe operation.

During service, all refrigerants should be reclaimed with proper equipment. Venting refrigerants directly to the atmosphere is harmful to the environment and may also create unsafe conditions based on inhalation, combustion, frostbite, or other health-based concerns.

The air conditioning system requires periodic maintenance.

NOT FOR RESALE

Driving and Operating

Driving Information
- Driving for Better Energy Efficiency 177
- Distracted Driving 178
- Defensive Driving 179
- Impaired Driving 179
- Control of a Vehicle 179
- Braking 179
- Steering 180
- Off-Road Recovery 181
- Loss of Control 181
- Off-Road Driving 182
- Off-Road App 186
- Driving on Wet Roads 188
- Hill and Mountain Roads 189
- Winter Driving 190
- If the Vehicle Is Stuck 190
- Vehicle Load Limits 191
- Truck-Camper Loading Information 195

Starting and Operating
- New Vehicle Break-In 195
- Power Modes 196

Electric Drive Unit
- Electric Drive Unit 197
- One-Pedal Driving 200

Drive Systems
- Four-Wheel Drive 201

Brakes
- Electric Brake Boost 202
- Antilock Brake System (ABS) 202
- Electric Parking Brake 202
- Brake Assist 203
- Post-Collision Braking (Secondary Collision Mitigation Braking) 204
- Hill Start Assist (HSA) 204
- Automatic Vehicle Hold (AVH) 204
- Regenerative Braking 204

Ride Control Systems
- Traction Control/Electronic Stability Control 205
- Driver Mode Control 207
- Four-Wheel Steering 209
- Air Suspension 211

Cruise Control
- Adaptive Cruise Control (Advanced) 214
- Hands-On Steering Assist (Lane Centering Assistance) 226
- Super Cruise 238

Advanced Driver Assistance Systems
- Advanced Driver Assistance Systems 254
- Assistance Systems for Parking or Backing 255
- Rear Vision Camera (RVC) 255
- Surround Vision System 256
- Park Assist 259
- Automatic Parking Assist (APA) 260
- Reverse Automatic Braking (RAB) 262
- Rear Pedestrian Alert 263
- Rear Cross Traffic Alert (RCTA) System 264
- Assistance Systems for Driving 265
- Forward Collision Alert (FCA) System 265
- Automatic Emergency Braking (AEB) 267
- Front Pedestrian Braking (FPB) System 271
- Lane Change Alert (LCA) 273
- Blind Zone Steering Assist (BZSA) 275
- Traffic Sign Assistant 276
- Driver Attention Assist 277
- Lane Keep Assist (LKA) 279
- Surround Vision Recorder 280

Charging
- When to Charge 281
- Plug-In Charging 282
- AC Charging 283
- DC Charging 284
- Delayed Charging Override 286
- Charging Status Feedback 287
- Charge Cord 290
- Installing and Operating the Charge Cord 293
- Charge Cord Troubleshooting and Maintenance 297

NOT FOR RESALE

Utility Interruption of Charging 298
Electrical Requirements for Battery Charging 298
Trailer Towing
General Towing Information 299
Conversions and Add-Ons
Add-On Electrical Equipment 299
Auxiliary Switches 300

Driving Information

Driving for Better Energy Efficiency

Use the tips in the categories below to help maximize energy efficiency and range.

In colder temperatures, while these efficiency tips will help, the EV range will be lower due to higher energy usage including energy spent heating the cabin.

The Energy Info feature available on the Vehicle Status app estimates the influence of the main factors impacting vehicle range. It displays how energy is being used for the current drive since the last time the vehicle was started and over a recently driven distance. See *Vehicle Status* ⇨ *129*.

Acceleration, Braking, and Coasting

Avoid rapid accelerations and decelerations.

Use cruise control when appropriate.

Plan ahead for decelerations, and coast whenever possible. Do not rush to traffic signals, and do not shift to N (Neutral) to coast.

Use the One-Pedal Driving feature when appropriate to help recover energy during coasting and braking. One-Pedal mode recovers more energy while coasting and braking than D (Drive) mode. See *One-Pedal Driving* ⇨ *200*.

Use the Regen on Demand feature during deceleration to help recover energy. See *Regenerative Braking* ⇨ *204*.

Terrain and Vehicle Speed

Higher speeds and grade changes use more energy and can significantly reduce electric range.

Managing the Interior Temperature

Climate Settings

Using the heat and air conditioning systems decreases the energy available for electric driving. Optimal energy efficiency is achieved when the heat, air conditioning, and fan are turned off.

Use the heated and ventilated seat features (if equipped) instead of the climate control system. Heating and ventilating the seat uses less energy than heating and cooling the interior. See *Heated and Ventilated Front Seats* ⇨ *46* and *Heated Rear Seats* ⇨ *50*.

NOT FOR RESALE

Use the Remote Start Climate Control feature to heat or cool the interior while the vehicle is plugged in to use electricity from the electrical outlet instead of using energy from the battery. See *Remote Start* ⇨ *13*.

On colder days, it is best to plug in the vehicle overnight, and then remote start the vehicle.

Use the Battery Gauge on the Instrument Cluster to view the effect of climate control settings on your estimated range. See *Battery Gauge (High Voltage)* ⇨ *109*.

Other Ways to Affect Cabin Temperature

In hot weather, avoid parking in direct sunlight. Use sunshades inside the vehicle.

Keep the inside of the windows clean to reduce fogging. Turn off the front defroster and rear defogger when they are not needed.

Avoid driving with the windows open at highway speeds.

Vehicle Charging and Maintenance

Charging

Keep the vehicle plugged in, even when fully charged, to keep the battery temperature ready for the next drive. This is important when outside temperatures are extremely hot or cold.

If possible, use a 240–volt high power charge station for best results. This allows the interior of the vehicle and high voltage battery to warm to optimal temperature.

Allow the vehicle to warm up for 20 minutes before driving. This helps to optimize the high voltage battery temperature before driving.

Maintenance

Always keep the tires properly inflated and the vehicle properly aligned.

Avoid unnecessary use of electrical accessories. Power used for functions other than propelling the vehicle will reduce the available range.

Cargo Weight

The weight of excess cargo in the vehicle affects efficiency and range. Avoid carrying more than is needed.

Using a rooftop carrier will reduce efficiency due to additional weight and drag.

Distracted Driving

⚠ Warning

Taking your eyes off the road too long or too often could cause a crash resulting in injury or death. Focus your attention on driving.

Distraction comes in many forms and can take your focus from driving. Exercise good judgment when engaging with vehicle functions. Limit activities that may divert attention away from the road. Many local governments have enacted laws regarding driver distraction. Become familiar with the local laws in your area.

To avoid distracted driving, keep your eyes on the road, keep your hands on the steering wheel, and focus your attention on driving.

- Do not use a phone in demanding driving situations. Use a hands-free method to place or receive necessary phone calls.
- Watch the road. Do not read, take notes, or look up information on phones or other electronic devices.

NOT FOR RESALE

- Designate a front seat passenger, if possible, to handle potential distractions.
- Become familiar with vehicle features before driving, such as programming favorite radio stations and adjusting climate control and seat settings.
- Program all trip information into any navigation device prior to driving.
- Wait until parked to retrieve items that have fallen to the floor.
- Stop or park the vehicle to tend to children.
- Keep pets in an appropriate carrier or restraint.
- Avoid stressful conversations while driving, whether with a passenger or on a cell phone.

Refer to the infotainment section for more information on using that system and the navigation system, if equipped, including pairing and using a cell phone.

Defensive Driving

Defensive driving means to always expect the unexpected. The first step in driving defensively is to wear a seat belt. See *Seat Belts* ⇨ *50*.

- Assume that other road users (pedestrians, bicyclists, and other drivers) are going to be careless and make mistakes. Anticipate what they may do and be ready.
- Allow enough following distance between your vehicle and the vehicle in front of you.
- Focus on the task of driving.

Impaired Driving

⚠ Warning

Drinking alcohol or taking drugs and then driving is very dangerous. Your reflexes, perceptions, attentiveness, and judgment can be affected by even a small amount of alcohol or drugs. You can have a serious — or even fatal — collision if you drive after drinking or taking drugs.

(Continued)

Warning (Continued)

Do not drive while under the influence of alcohol or drugs, or ride with a driver who has been drinking or is impaired by drugs. Find alternate transportation home; or if you are with a group, designate a driver who will remain sober.

Death and injury associated with impaired driving is a global tragedy.

Control of a Vehicle

Braking, steering, and accelerating are important factors in helping to control a vehicle while driving.

Braking

Braking action involves perception time and reaction time. Deciding to push the brake pedal is perception time. Actually doing it is reaction time.

Average driver reaction time is about three-quarters of a second. In that time, a vehicle moving at 100 km/h (60 mph) travels 20 m (66 ft) and may not have enough time to stop in an emergency.

NOT FOR RESALE

Tips for stopping safely include:

- Keep a safe following distance from the vehicle in front of you.
- Avoid needless heavy braking.
- Keep pace with traffic.

If a brake fault occurs, the brakes may lose power assist. Without power assist, the brake pedal will be harder to push, and it can take longer to stop the vehicle.

If the vehicle loses propulsion power while driving, the electric brake boost system, which is powered by the 12-volt vehicle battery, maintains the power assist for as long as the battery has sufficient voltage. Steer the vehicle out of the roadway and stop as soon as it is safe to do so. See *Electric Brake Boost* ⇨ *202*.

Steering

Caution

To avoid damage to the steering system, do not drive over curbs, parking barriers, or similar objects at speeds greater than 3 km/h (1 mph). Use care when driving

(Continued)

Caution (Continued)

over other objects such as lane dividers and speed bumps. Damage caused by misuse of the vehicle is not covered by the vehicle warranty.

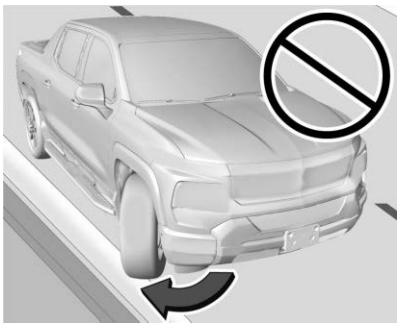

Electric Power Steering

The vehicle is equipped with an electric power steering system, which reduces the amount of effort needed to steer the vehicle. It does not have power steering fluid. Regular maintenance is not required.

If the power steering system overheats, there will be a temporary reduced level of steering assist until the system cools down. For example, the system can overheat if the steering wheel is held firmly for an extended amount of time at the end of its range of travel. The energy from the additional power assist becomes heat. Normal operation of the power steering system will resume when the system cools down.

If the power steering system malfunctions, the power steering system will have no steering assist and greater steering effort may be required. See your dealer to resolve the problem.

Four-Wheel Steering

If equipped, this feature enables the vehicle to steer with all four wheels to reduce the turning radius and improve maneuverability. See *Four-Wheel Steering* ⇨ *209*.

Curve Tips

- Reduce speed before entering a curve.
- Maintain a reasonable steady speed through the curve.

NOT FOR RESALE

- Wait until the vehicle is out of the curve before accelerating gently into the straightaway.

Steering in Emergencies

- There are some situations when steering around a hazard may be more effective than braking.
- Holding both sides of the steering wheel allows you to turn 180 degrees without removing a hand.
- The Antilock Brake System (ABS) allows steering while braking.

Off-Road Recovery

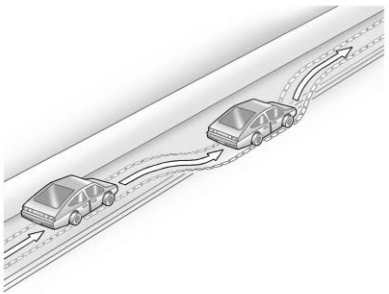

The vehicle's right wheels can drop off the edge of a road onto the shoulder while driving. Follow these tips:

1. Ease off the accelerator and then, if there is nothing in the way, steer the vehicle so that it straddles the edge of the pavement.
2. Turn the steering wheel about one-eighth of a turn, until the right front tire contacts the pavement edge.
3. Turn the steering wheel to go straight down the roadway.

Loss of Control

Skidding

There are three types of skids that correspond to the vehicle's three control systems:

Braking Skid: Wheels are not rolling.

Steering or Cornering Skid : Too much speed or steering in a curve causes tires to slip and lose cornering force.

Acceleration Skid : Too much throttle causes the driving wheels to spin.

Antilock brakes help to avoid only the braking skid.

Defensive drivers avoid most skids by taking reasonable care suited to existing conditions, and by not exceeding those conditions. But skids are always possible.

If the vehicle starts to skid, follow these suggestions:

- Ease your foot off the accelerator pedal and steer the way you want the vehicle to go. The vehicle may straighten out, but if it skids again from oversteer, be ready to correct another skid if it occurs.
- Slow down and adjust your driving according to weather conditions. Stopping distance may be longer and vehicle control may be affected when traction is reduced by water, snow, ice, gravel, or other material on the road. Learn to recognize warning clues — such as enough water, ice, or packed snow on the road to make a mirrored surface — and slow down when you have any doubt.
- Try to avoid sudden steering, acceleration, or braking, including reducing vehicle speed by shifting to a lower gear. Any sudden changes could cause the tires to slide.

NOT FOR RESALE

Off-Road Driving

⚠ Warning

Off-roading features are intended for use by experienced and qualified drivers. Uneven terrain and rough surfaces combined with improper driver inputs for the conditions may result in bouncing, quick changes in direction or loss of control of the vehicle, particularly when driving at higher speeds. You or others could be injured or killed. Always drive safely and exercise appropriate caution for the conditions. Always wear your seat belt.

If equipped with all-terrain tires, this vehicle may be used for off-road driving. If not equipped with all-terrain tires, this vehicle should only be driven on a level. solid surface or used for light recreational driving away from paved roads.

The electric four-wheel drive (e4WD) system on this vehicle is not the same as a traditional 4x4 system and is not designed to handle extreme off-roading activities. See *Four-Wheel Drive ⇨ 201*.

Off-Road Vehicle Features

If equipped, the following features may assist on off-road driving:

- Four-wheel steering: Provides the ability to steer the vehicle with all four wheels, reducing the turning diameter and improving maneuverability of the vehicle. See *Four-Wheel Steering ⇨ 209*.
- Exterior cameras: Provides various views around the vehicle to avoid obstacles during off-roading events. See *Surround Vision System ⇨ 256*.

Preparing to Drive Away from Paved Roads

Have all necessary maintenance and service work completed.

Charge the vehicle and check inflation pressure in all tires, including the spare, if equipped. See *Tire Pressure ⇨ 333*.

Select Off-Road in the Drive Modes app on the infotainment home screen. See *Driver Mode Control ⇨ 207*.

Know the local laws that apply to off-road driving.

Loading the Vehicle for Off-Road Driving

⚠ Warning

- Unsecured cargo on the load floor can be tossed about when driving over rough terrain. You or your passengers can be struck by flying objects. Secure the cargo properly.
- Keep cargo in the cargo area as far forward and as low as possible. The heaviest things should be on the floor, forward of the rear axle.
- Heavy loads on the roof raise the vehicle's center of gravity, making it more likely to roll over. You can be seriously or fatally injured if the vehicle rolls over. Put heavy loads inside the cargo area, not on the roof.

Caution

Placing tall or oversized items near or against the spoiler, midgate, or the lights above the rear window can result in vehicle

(Continued)

NOT FOR RESALE

Caution (Continued)

damage. To prevent vehicle damage, properly store cargo in the truck bed away from the spoiler, midgate, and cargo lights using the cargo tie-downs.

For more information about loading the vehicle, see *Vehicle Load Limits* ⇨ *191* and *Tires* ⇨ *328*.

Environmental Concerns

Always use established trails, roads, and areas that are reserved for public off-road recreational driving. Obey all posted regulations.

Do not damage shrubs, flowers, trees, grasses, or disturb wildlife.

Driving on Hills

⚠ Warning

Many hills are simply too steep for any vehicle. Driving down hills can cause loss of control. Driving across hills can cause a rollover. You could be injured or killed. Do not drive on steep hills.

⚠ Warning

Getting out of the vehicle on the downhill side when stopped across an incline is dangerous. If the vehicle rolls over, you could be crushed or killed. Always get out on the uphill side of the vehicle and stay well clear of the rollover path.

Driving safely on hills requires good judgment and an understanding of the vehicle's capabilities.

Before driving on a hill, assess the steepness, traction, and obstructions. If the terrain ahead cannot be seen, get out of the vehicle and walk the hill before driving further.

When driving on hills:

- Keep a firm grip on the steering wheel.
- Maintain a slow speed. Select Terrain Mode in the Drive Modes app to maximize torque for better control at lower speeds.

⚠ Warning

Driving to the top of a hill at high speed can cause a crash. There could be a drop-off, embankment, cliff, or even another vehicle. You could be seriously injured or killed. As you near the top of a hill, slow down and stay alert.

- When possible, drive straight up or down the hill.
- Slow down when approaching the top of the hill.
- Use headlights even during the day to make the vehicle more visible.
- When driving down a hill, keep the vehicle headed straight down. Use low mode to slow the vehicle and help keep the vehicle under control.
- Never go downhill either forward or in reverse with the vehicle in N (Neutral).

NOT FOR RESALE

⚠ Warning

Do not coast downhill in N (Neutral) or with the vehicle turned off. See *Hill and Mountain Roads* ⇨ *189* for tips on maximizing regenerative braking and minimizing the load on the brake system. Heavy braking when going down a hill can cause your brakes to overheat and fade. This could cause loss of control and you or others could be injured or killed. Apply the brakes lightly when descending a hill and use a low mode to keep vehicle speed under control.

- Avoid turns that take the vehicle across the incline of the hill. Driving across an incline puts more weight on the downhill wheels, which could cause a downhill slide or a rollover.
- Loose gravel, muddy spots, or even wet grass can cause the tires to slip sideways, downhill. If the vehicle slips sideways, it can hit something and potentially roll over.
- Hidden obstacles can make the steepness of the incline more severe. If a rock is driven across with the uphill wheels, or if the downhill wheels drop into a rut or depression, the vehicle can tilt even more.
- If an incline must be driven across, and the vehicle starts to slide, turn downhill. This should help straighten out the vehicle and prevent side slipping.

Driving in Mud, Sand, Snow, or Ice

⚠ Warning

Driving on frozen lakes, ponds, or rivers can be dangerous. Ice conditions vary greatly and the vehicle could fall through the ice; you and your passengers could drown. Drive your vehicle on safe surfaces only.

Select Off-Road on the Drive Modes app when driving in mud. Keep the vehicle moving to avoid getting stuck. See *Driver Mode Control* ⇨ *207*.

Traction changes when driving on sand. On loose sand, such as on beaches or sand dunes, the tires tend to sink into the sand. This affects steering, accelerating, and braking. Drive at a reduced speed and avoid sharp turns or abrupt maneuvers.

Traction is reduced on hard-packed snow and ice and it is easy to lose control. Reduce vehicle speed when driving on hard-packed snow and ice.

Water Fording

⚠ Warning

Driving in water can cause loss of vehicle control or vehicle damage. As water depths increase, reduce the vehicle speed.

- Never drive through water deeper than the driver's side front gravel guard behind the front tire.
- Be aware of submerged obstacles.
- Never open your doors while in water.

NOT FOR RESALE

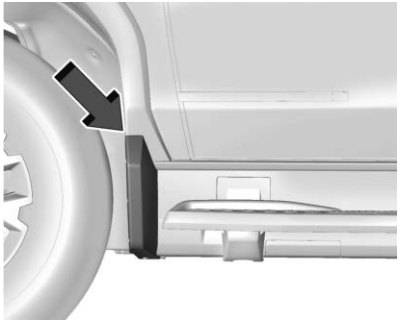

Warning

Driving through flowing water can be dangerous and have an unpredictable effect on vehicle control. Even shallow water can wash away the ground from under your tires. Traction could be lost, the vehicle could be swept downstream or the vehicle could roll over. Do not drive through rushing water.

Caution

Do not drive through standing water if it is deep enough to cover the gravel guards. Deep water can damage vehicle parts.

Your vehicle is capable of driving in varying water depths. See *Air Suspension* ⇨ *211*.

Before driving in water:

- Determine the depth of the water.
- Enter the water slowly. If the water is deeper than the center of the front hubs, never exceed 5 km/h (3 mph).
- Always drive in the direction of the current.
- Avoid oncoming vehicles as they will increase the water depth surrounding your vehicle.
- After exiting the water, repeatedly and gently apply the brakes to dry them off and restore effectiveness.

If Something Goes Wrong

Warning

A vehicle with driveline damage may roll when shifted into P (Park). Always set the Electric Parking Brake before inspecting for driveline damage or when securing the vehicle on a flatbed tow truck. See *Electric Parking Brake* ⇨ *202* and *Transporting a Disabled Vehicle* ⇨ *363*.

If during your off-road experience a warning light or warning message displays on the instrument cluster, or if the vehicle sustains damage, stop driving as soon as it is safe to do so. Correct the condition if possible before continuing driving. If a warning light or message appears, or if the condition cannot be corrected, see your dealer. See *Vehicle Messages* ⇨ *132*.

If the vehicle is operating with reduced acceleration or reduced propulsion, stop your off-road experience and drive slowly to an accessible point for further assistance. The vehicle should be taken to your dealer for

NOT FOR RESALE

service as soon as possible. See *Propulsion Power Messages* ⇨ *133* and *Propulsion Power is Limited Light* ⇨ *114*.

After Driving Your Vehicle Off-Road

Be sure to switch out of Off-Road Mode or Terrain Mode to return to normal driving. See *Driver Mode Control* ⇨ *207*. Driving in Off-Road mode or Terrain mode on normal roads could be dangerous or damage the vehicle.

Inspections and Cleaning

⚠ Warning

Lifting a vehicle and getting under it to do maintenance or repairs is dangerous without the appropriate safety equipment and training. If a jack is provided with the vehicle, it is designed only for changing a flat tire. If it is used for anything else, you or others could be badly injured or killed if the vehicle slips off the jack. If a jack is provided with the vehicle, only use it for changing a flat tire.

Remove any brush or debris that has collected on the underbody or chassis, or under the hood. Clean the lenses on the exterior cameras. These accumulations can be a fire hazard.

After operation in mud or sand, have the brake linings cleaned and checked. These substances can cause glazing and uneven braking.

Check the body structure, driveline, steering, suspension, wheels, tires, and other vehicle systems for damage, or have these inspections done by your dealer.

The extreme conditions of off-road driving require more frequent maintenance service. See "Severe Conditions Requiring More Frequent Maintenance" and "Additional Required Services — Severe Service" on *Maintenance Schedule* ⇨ *375*.

Off-Road App

Overview

The vehicle is equipped with an Off-Road App to assist in monitoring the motion and status of your vehicle, which can be beneficial in off-road environments. See *Off-Road Driving* ⇨ *182*.

The Off-Road App displays data such as the vehicle's pitch/roll angle, compass bearing and more, depending on how your vehicle is equipped. Some gauges track of the maximum values you have achieved, and you can reset the values to start over.

⚠ Warning

Taking your eyes off the road for too long or too often while using any infotainment feature can cause a crash. You or others could be injured or killed. Do not give extended attention to infotainment tasks while driving. Limit your glances at the vehicle displays and focus your attention on driving. Use voice commands whenever possible.

Getting Started

To open the app, select the OFF-ROAD icon from the infotainment home screen. The available off-road tools and detailed widgets are displayed in a column at left, and on-screen auxiliary (AUX) switches display horizontally. Scroll up/down to view more tools or widgets.

If a gauge for a tool shows minimum and maximum values, touch the RESET icon on the screen to reset the minimum or maximum value.

NOT FOR RESALE

The available off-road tools and widgets. may include:

Air Down mode: Lets you set a custom tire pressure for better traction during off-road driving. See *Tire Pressure Monitor Operation* ⇨ *335*.

Altimeter: Displays current elevation. Maintains lowest and highest values, which can be reset as needed.

Chassis and Tire Pressure: Press "+" in the upper-left corner of the widget to add to cluster.

Displays steering angle in degrees of tilt for front and rear tires.

Displays tire pressure. See *Tire Pressure Monitor System* ⇨ *335*.

Displays how torque is being distributed to each wheel.

Camera app shortcut: Launches the Camera App for exterior camera views. See *Surround Vision System* ⇨ *256*.

Compass: Displays direction of travel. If using the vehicle navigation, the GPS coordinates of your destination are also displayed.

On-screen auxiliary (AUX) switches: Enables control of aftermarket accessories without a physical button. See "On-Screen Auxiliary Switches" later in this section.

Pitch and roll: Press "+" in the upper-left corner of the widget to add to cluster to show real-time vehicle pitch and roll.

Torque output: Real-time display of torque output compared to peak available torque.

On-Screen Auxiliary Switches

If equipped, certain aftermarket accessories can be controlled through programmable on-screen auxiliary switches inside the Off-Road App. This feature requires user installation of an auxiliary switch interface module, which is mounted under the hood. When an aftermarket accessory such as off-road lighting is installed onto the vehicle, it will be hard-wired to one of the connections on the auxiliary switch interface module. See your dealer.

Six on-screen auxiliary switches are available. You can assign each on-screen switch a label and icon of your choosing to match the installed accessory. Assigning unique icons to the on-screen auxiliary switches will help you recognize them on views where there is not enough room to show the text labels.

If the optional auxiliary switch interface module is not installed, a message "No accessory connected to this switch" displays when you touch an on-screen auxiliary switch.

If you want to relocate control of an accessory to a different on-screen auxiliary switch, for example from AUX 5 to AUX 2, you would need to move the physical connection of the accessory on the auxiliary switch interface module.

There are several ways to display the auxiliary switches on the screen. The switches display in different sizes depending on the view selected. You can rotate among these views at any time.

- Card View: Enables access to the auxiliary switches alongside other infotainment features. To access Card View, swipe left or right on the left-hand side of the infotainment screen while on the customizable home page to bring the Off Road content into view.
- Pro View: Provides access to all auxiliary switches while simultaneously viewing several widgets. To access Pro View, select the card icon from within the Off-Road App. You may also define which switches you want to see in this view. If you do not use all six switches, you can remove

NOT FOR RESALE

the unused switches from Pro View. The available switches will be resized larger and will be easier to touch.

- AUX Control Panel: Shows the switch icons in their largest possible size for ease of use while driving on off-road terrain that may make accurate screen touches difficult. To access the AUX Control Panel, select the AUX icon within the Off-Road App.

To customize an on-screen auxiliary switch:

1. While the vehicle is in P (Park), touch the OFF-ROAD icon on the infotainment display.
2. Touch the AUX icon from within the app.
3. Touch the pencil icon in the lower-left corner of the display to enter Edit mode.
4. Touch the switch you want to customize.
   - To enter a new label for the switch, touch the name field and type in a new label. To save your update, close the keyboard.
   - To change the icon, touch a new one on the list.
   - Review the additional options listed below the name field. Touch the checkbox next to the option description to enable or disable the option.

     Turn on only while switch is held down: When this option is enabled, the switch will only operate while your finger continues to touch and hold the on-screen switch. This may be useful for accessories that only need to be turned on for short intervals.

     Turn on parking lights while switch is on: When this option is enabled, the vehicle parking lights will automatically turn on while the switch is in use. This may be particularly useful to use for a light bar, as it will help ensure your vehicle remains visible while driving in low-light conditions with the headlights off.
5. To save your customizations for the on-screen switch, touch the BACK icon.

Driving on Wet Roads

⚠ Warning

Wet brakes can cause crashes. They might not work as well in a quick stop and could cause pulling to one side. You could lose control of the vehicle.

After driving through a large puddle of water or a car/vehicle wash, lightly apply the brake pedal until the brakes work normally.

Flowing or rushing water creates strong forces. Driving through flowing water could cause the vehicle to be carried away. If this happens, you and other vehicle occupants could drown. Do not ignore police warnings and be very cautious about trying to drive through flowing water.

Rain and wet roads can reduce traction and affect your ability to stop and accelerate. Always drive slower in these driving conditions and avoid driving through large puddles and deep-standing or flowing water.

NOT FOR RESALE

Hydroplaning

⚠ Warning

Hydroplaning can cause a loss of steering ability, leading to a crash. Slow down and follow these other instructions to help avoid hydroplaning on wet roads.

Hydroplaning can occur on wet roads if water builds up under the tires, causing them to have little to no contact with the road.

Rainy Weather Tips

Besides slowing down, other wet weather driving tips include:

- Allow extra following distance.
- Pass with caution.
- Keep windshield wiping equipment in good condition.
- Fill the windshield washer fluid reservoir.
- Maintain proper tire pressure and tread depth. See *Tires* ⇨ *328*.
- Turn off any cruise control system, if equipped. See *Adaptive Cruise Control (Advanced)* ⇨ *214* or *Super Cruise* ⇨ *238*.
- Turn off One-Pedal Driving mode. See *One-Pedal Driving* ⇨ *200*.
- Turn on the Traction Control System and StabiliTrak/Electronic Stability Control. See *Traction Control/Electronic Stability Control* ⇨ *205*.

Hill and Mountain Roads

⚠ Warning

Do not charge your vehicle's battery above an 80% charge if you are going to drive down long, steep grades such as mountain passes. This provides room in the battery for regenerative braking to supplement your conventional brakes during the descent. This is especially important when towing a trailer, which puts additional stress on your vehicle's braking system.

If the battery becomes full, regenerative braking will be limited or unavailable. The brakes will have to do all the work of slowing down the vehicle and could become too hot. Hot brakes may not be

(Continued)

Warning (Continued)

able to slow the vehicle enough to maintain speed and control. To help avoid the risk of a crash, limit the battery's charge and, if you experience brake fade or receive a brake warning, stop the vehicle and allow the brakes to cool.

See "Charge Now" under *Charging* ⇨ *122* for information on setting charge limits.

Driving on steep hills or through mountains is different than driving on flat or rolling terrain. Be sure to:

- Use regenerative braking to help slow the vehicle or maintain speed by keeping the vehicle in gear and limiting the initial battery charge to 80% or less. See *Regenerative Braking* ⇨ *204*.
- When braking is necessary, use frequent, light taps of the brake pedal. This maximizes regenerative braking and minimizes the load on the vehicle brake system.
- Keep the vehicle serviced and in good shape.

NOT FOR RESALE

- Check all fluid levels, brakes, tires, and cooling system.
- Drive at speeds that keep the vehicle in its own lane. Do not swing wide or cross the center line.
- Be alert on top of hills; something could be in your lane (e.g., stalled car, crash).
- Pay attention to special road signs (e.g., falling rocks area, winding roads, long grades, passing or no-passing zones) and take appropriate action.

Winter Driving

Driving on Snow or Ice

Caution
To avoid damage to the wheels and brake components, always clear snow and ice from inside the wheels and underneath the vehicle before driving.

Snow or ice between the tires and the road causes less traction or grip, so drive carefully. Wet ice can occur at about 0 °C (32 °F) when freezing rain begins to fall. Avoid driving on wet ice or in freezing rain until the roads are treated.

For Slippery Road Driving:

- Accelerate gently. Accelerating too quickly causes the wheels to spin and makes the surface under the tires slick.
- If enabled, turn off One-Pedal Driving. See *One-Pedal Driving* ⇨ *200*.
- If turned off, turn on the Traction Control and the Electronic Stability Control systems. See *Traction Control/Electronic Stability Control* ⇨ *205*.
- Select the Snow/Ice driver mode. See *Driver Mode Control* ⇨ *207*.
- Apply the brakes sooner than you would on dry pavement. The Antilock Brake System (ABS) improves vehicle stability during hard stops. See *Antilock Brake System (ABS)* ⇨ *202*.
- Avoid using the Regen on Demand paddle. See *Regenerative Braking* ⇨ *204*.
- Allow greater following distance and watch for slippery spots. Icy patches can occur on otherwise clear roads in shaded areas. The surface of a curve or an overpass can remain icy when the surrounding roads are clear. Avoid sudden steering maneuvers and braking while on ice.
- Turn off cruise control.

Blizzard Conditions

Stop the vehicle in a safe place and signal for help. Stay with the vehicle unless there is help nearby. If possible, use Roadside Assistance. See *Roadside Assistance Program* ⇨ *386*. To get help and keep everyone in the vehicle safe:

- Turn on the hazard warning flashers.
- Tie a red cloth to an outside mirror.

To conserve battery energy while waiting for help, run the vehicle for only short periods as needed to warm the vehicle and then shut the vehicle off and partially close the window. Moving about to keep warm also helps. For additional tips to help conserve battery energy in cold weather, see *Driving for Better Energy Efficiency* ⇨ *177*.

If the Vehicle Is Stuck

⚠ Warning
If the vehicle's tires spin at high speed, they can explode, and you or others could be injured. Spin the wheels as little as possible and avoid going above 56 km/h (35 mph).

NOT FOR RESALE

Slowly and cautiously spin the wheels to free the vehicle when stuck in sand, mud, ice, or snow.

The Traction Control System can often help to free a stuck vehicle. See *Traction Control/ Electronic Stability Control* ⇨ *205*. If this does not free the vehicle, try "rocking" the vehicle as described below.

Do not use tire chains on this vehicle. For information about using traction devices, see *Tire Chains and Other Traction Devices* ⇨ *345*.

Rocking the Vehicle to Get It Out

Turn the steering wheel left and right to clear the area around the front wheels. Turn off the traction control and StabiliTrak/electronic stability control features. Shift back and forth between R (Reverse) and D (Drive), spinning the wheels as little as possible. To prevent wear on the electric drive unit, wait until the wheels stop spinning before shifting gears. Slowly spinning the wheels in the forward and reverse directions causes a rocking motion that could free the vehicle. If that does not get the vehicle out after a few tries, it might need to be towed out. See *Transporting a Disabled Vehicle* ⇨ *363*.

Recovery Hooks

⚠ Warning

Never pull on recovery hooks from the side. The hooks could break and you and others could be injured. When using recovery hooks, always pull the vehicle from the front.

Caution

Never use recovery hooks to tow the vehicle. The vehicle could be damaged, and the repairs would not be covered by the vehicle warranty.

If equipped, there are recovery hooks at the front of the vehicle. Use them if the vehicle is stuck in sand, mud, ice, or snow to pull the vehicle back to the road and continue driving.

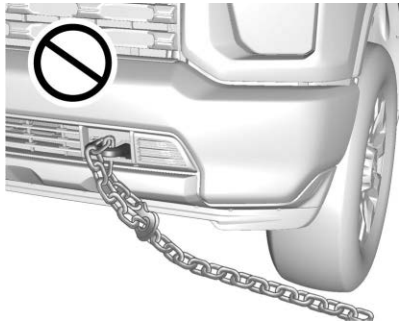

Vehicle Load Limits

It is very important to know how much weight the vehicle can carry. This weight is called the vehicle capacity weight and includes the weight of all occupants, cargo, and all nonfactory-installed options. Two labels on the vehicle may show how much weight it was designed to carry: the Tire and Loading Information label and the Certification/Tire label.

NOT FOR RESALE

Tire and Loading Information Label

⚠ Warning

Do not load the vehicle any heavier than the Gross Vehicle Weight Rating (GVWR), or either the maximum front or rear Gross Axle Weight Rating (GAWR). This can cause systems to break and change the way the vehicle handles. This could cause loss of control and a crash. Overloading can also reduce stopping performance, damage the tires, and shorten the life of the vehicle.

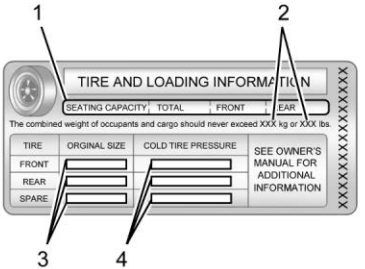

Label Example

A vehicle-specific Tire and Loading Information label is attached to the center pillar (B-pillar). The Tire and Loading Information label shows the number of occupant seating positions (1), and the maximum vehicle capacity weight (2) in kilograms and pounds.

The Tire and Loading Information label also shows the size of the original equipment tires (3) and the recommended cold tire inflation pressures (4). For more information on tires and inflation see *Tires* ➪ *328* and *Tire Pressure* ➪ *333*.

There is also important loading information on the vehicle Certification/ Tire label. It may show the Gross Vehicle Weight Rating (GVWR) and the Gross Axle Weight Rating (GAWR) for the front and rear axles. See “Certification/Tire Label” later in this section.

Steps for Determining Correct Load Limit

1. Locate the statement "The combined weight of occupants and cargo should never exceed XXX kg or XXX lbs." on your vehicle’s placard.
2. Determine the combined weight of the driver and passengers that will be riding in your vehicle.
3. Subtract the combined weight of the driver and passengers from XXX kg or XXX lbs.
4. The resulting figure equals the available amount of cargo and luggage load capacity. For example, if the "XXX" amount equals 1400 lbs. and there will be five 150 lb passengers in your

NOT FOR RESALE

vehicle, the amount of available cargo and luggage load capacity is 650 lbs. (1400-750 (5 x 150) = 650 lbs.)

5. Determine the combined weight of luggage and cargo being loaded on the vehicle. That weight may not safely exceed the available cargo and luggage load capacity calculated in Step 4.
6. If your vehicle will be towing a trailer, load from your trailer will be transferred to your vehicle. Consult this manual to determine how this reduces the available cargo and luggage load capacity of your vehicle.

See *General Towing Information* ⇨ *299* for important information on towing a trailer, towing safety rules, and trailering tips.

If aftermarket accessories are installed on the vehicle, for example a rooftop carrier, be sure to add the weight of all installed accessories to the combined weight of luggage and cargo.

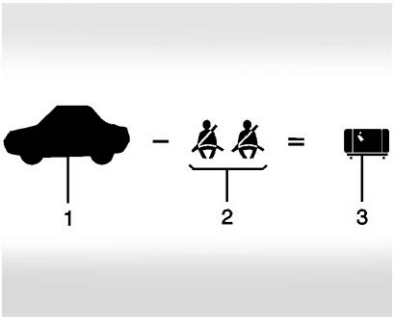

Example 1

1. Vehicle Capacity Weight for Example 1 = 453 kg (1,000 lb)

   Then subtract Accessory Weight, for example a rooftop cargo box = 15.8 kg (35 lb)
2. Subtract Occupant Weight @ 68 kg (150 lb) × 2 = 136 kg (300 lb)
3. Remaining available capacity for Cargo Weight = 301.2 kg (665 lb)

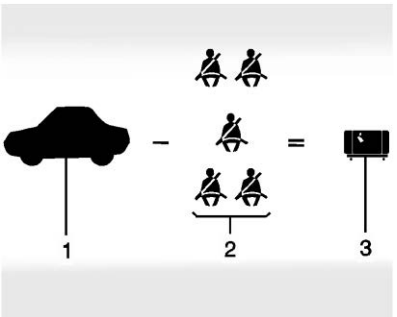

Example 2

1. Vehicle Capacity Weight for Example 2 = 453 kg (1,000 lb)

   Then subtract Accessory Weight, for example a rooftop cargo box = 18.1 kg (40 lb)
2. Subtract Occupant Weight @ 68 kg (150 lb) × 5 = 340 kg (750 lb)
3. Remaining available capacity for Cargo Weight = 94.9 kg (210 lb)

NOT FOR RESALE

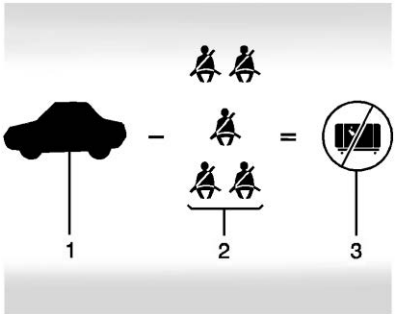

Example 3

1. Vehicle Capacity Weight for Example 3 = 453 kg (1,000 lb)
2. Subtract Occupant Weight @ 91 kg (200 lb) × 5 = 453 kg (1,000 lb)
3. Available Cargo Weight = 0 kg (0 lb)

Refer to the Tire and Loading Information label for specific information about the vehicle's capacity weight and seating positions. The combined weight of the driver, passengers, accessories, and cargo should never exceed the vehicle's capacity weight.

Certification/Tire Label

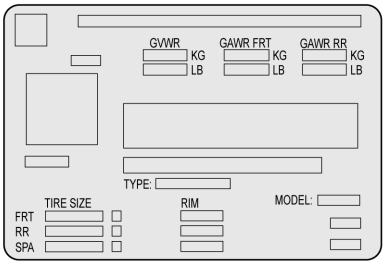

Label Example

A vehicle-specific Certification/Tire label is attached to the center pillar (B-pillar). The label may show the size of the vehicle's original tires and the inflation pressures needed to obtain the gross weight capacity of the vehicle. This is called Gross Vehicle Weight Rating (GVWR). The GVWR includes the weight of the vehicle, all occupants, and cargo.

The Certification/Tire label also may show the maximum weights for the front and rear axles, called Gross Axle Weight Rating (GAWR). To determine the actual loads on the front and rear axles, weigh the vehicle at a weigh station. Your dealer can help with this. Be sure to spread the load equally on both sides of the centerline.

The Certification/Tire label also contains important information about the Front Axle Reserve Capacity.

⚠ Warning

In the case of a sudden stop or collision, things carried in the bed of your truck could shift forward and come into the passenger area, injuring you and others. If you put things in the bed of your truck, you should make sure they are properly secured.

Using heavier suspension components to get added durability might not change the weight ratings. Ask your dealer to help load the vehicle the right way.

NOT FOR RESALE

⚠ Warning

Things you put inside the vehicle can strike and injure people in a sudden stop or turn, or in a crash.

- Put things in the cargo area of the vehicle. Try to spread the weight evenly.
- Never stack heavier things, like suitcases, inside the vehicle so that some of them are above the tops of the seats.
- Do not leave an unsecured child restraint in the vehicle.
- When you carry something inside the vehicle, secure it whenever you can.
- Do not leave a seat folded down unless you need to.

Add-On Equipment

Caution

Overloading the vehicle may cause damage. Repairs would not be covered by the vehicle warranty. Do not overload the vehicle.

When carrying removable items, a limit on how many people carried inside the vehicle may be necessary. Be sure to weigh the vehicle before buying and installing the new equipment.

Remember not to exceed the Gross Axle Weight Rating (GAWR) of the front or rear axle.

Truck-Camper Loading Information

The vehicle was neither designed nor intended to carry a slide-in camper.

Caution

Adding a slide-in camper or similar equipment to the vehicle can damage it, and the repairs would not be covered by the vehicle warranty. Do not install a slide-in camper or similar equipment on the vehicle.

Starting and Operating

New Vehicle Break-In

Caution

Avoid making hard stops for the first 322 km (200 mi). During this time the new brake linings are not yet broken in. Hard stops with new linings can mean premature wear and earlier replacement. Follow this breaking-in guideline every time you get new brake linings. Following break-in, vehicle speed and load can be gradually increased.

NOT FOR RESALE

Power Modes

Turning the Vehicle On

This vehicle is equipped with the Hands-Free Start feature, which automatically starts the vehicle when you enter with a remote key, press the brake, or close the driver door.



A vehicle ready light displays on the instrument cluster when the vehicle is ready to be driven. This could take up to 15 seconds at extremely cold temperatures. The instrument cluster also displays an active battery gauge when the vehicle is ready to be driven.

If a remote key was left in the vehicle after being driven, closing the driver door will not turn on the vehicle. The brake pedal must be pressed to turn the vehicle on. Driver Information Center messages will display explaining how to turn on the vehicle.

If the remote key is not in the vehicle or something is interfering with the remote key, a message displays in the Driver Information Center.

If the vehicle does not turn on due to a low remote key battery, the vehicle can still be driven. See *Remote Key Operation* ⇨ *8*.

A chime will sound if the driver door is opened while the vehicle is on.

Turning the Vehicle Off

⚠ Warning

Turning off the vehicle while moving may disable the airbags. While driving, only shut the propulsion system off in an emergency.

When the vehicle is shifted to P (Park), it will turn off when a driver exit is detected. The vehicle can also be turned off by pressing OFF on the infotainment display.

Retained Accessory Power (RAP) remains active until the driver door is opened.

If the vehicle was started but not shifted out of P (Park), it will not turn off based on driver exit detection and will need to be turned off through OFF or waiting for the automatic shutdown timeout.

To turn off the vehicle in an emergency:

1. Brake using firm and steady pressure. Do not pump the brakes repeatedly. This may deplete power assist, requiring increased brake pedal force.
2. Shift the vehicle to N (Neutral). This can be done while the vehicle is moving. After shifting to N (Neutral), firmly apply the brakes and steer the vehicle to a safe location.
3. Come to a complete stop, shift to P (Park), and turn off the vehicle.
4. Set the parking brake. See *Electric Parking Brake* ⇨ *202*.

If a drive mode is entered where OFF is present while moving, the vehicle can be turned off while driving. Press OFF and follow the instructions displayed in the Driver Information Center.

NOT FOR RESALE

Climate control functions, such as defrost, heating, and air conditioning are only available while the vehicle is powered on. Turning the vehicle off will turn off all climate controls.

An additional emergency vehicle off button will display if a collision is detected. It can be pressed to turn off the vehicle.

Keep Vehicle On After Driver Exit

⚠ Warning

It is dangerous to get out of the vehicle if the P (Park) button is not pressed with the parking brake set. The vehicle can roll.

Do not leave the vehicle when the propulsion system is running. If you have left the propulsion system running, the vehicle can move suddenly. You or others could be injured. To be sure the vehicle will not move, even when you are on fairly level ground, always set the parking brake and press the P (Park) button.

To keep the vehicle on after a driver exit:

1. Shift into P (Park) and press the parking brake switch. See *Electric Drive Unit* ⇨ *197*.
2. Press on the infotainment display. The vehicle will remain on for a set time, which will be displayed upon activation. To restart the time interval, press again.

Using will reduce the charge level of the high voltage battery. Ensure your battery has sufficient charge before activating . See *Battery Gauge (High Voltage)* ⇨ *109*.

should only be used when the vehicle is attended. A horn chirp will sound if the vehicle turns off during the set time interval.

Service Mode

Caution

Placing the vehicle in Service Mode will use the 12-volt battery. Do not use Service Mode for an extended period, or the vehicle may not start.

This mode is available for service and diagnostics, and to verify the proper operation of the service vehicle soon light as may be required for inspection or maintenance purposes.

To place the vehicle in Service Mode:

1. Ensure the vehicle is off, the driver door is open, and the brake pedal is not applied.
2. Press and release the accelerator pedal three times within five seconds, keeping the accelerator pressed on the third time.

The instrument cluster and infotainment systems will operate normally, but the vehicle will not be able to be driven. The propulsion system will not be active in Service Mode. Press the brake pedal to turn the vehicle on or press OFF on the infotainment display to turn the vehicle off.

Electric Drive Unit



NOT FOR RESALE

Electric Drive Unit Shift Pattern

- The shift pattern is displayed on the front of the shift lever.
- The selected gear position will illuminate red, while others are displayed in white.
- In frigid conditions, the indicator may blink until fully engaged.

Shifter Positions

P (Park): Use this position when starting the vehicle to ensure the vehicle does not move. This position locks the drive wheels.

R (Reverse): Use this gear position to back up.

N (Neutral): In this gear position, the drive unit does not connect with the wheels. To restart the propulsion system when the vehicle is already moving, use N (Neutral) only.

D (Drive): Use this gear position for normal driving.

Shifting Into Gear Positions

⚠ Warning

It is dangerous to get out of the vehicle if the P (Park) button is not pressed with the parking brake set. The vehicle can roll.

Do not leave the vehicle when the propulsion system is running. If you have left the propulsion system running, the vehicle can move suddenly. You or others could be injured. To be sure the vehicle will not move, even when you are on fairly level ground, always set the parking brake and press the P (Park) button.

1. Verify that the vehicle ready light is on.
2. Apply the brake pedal.
3. Move the shift lever to the desired position.

   After releasing the shift lever, it will return to the center position.

   The P indicator will turn white and the selected gear indicator on the shift lever will turn red when the vehicle is no longer in P (Park).

If you cannot shift out of P (Park), check the Driver Information Center for an issue message. If you have followed Steps 1–3 as directed and your vehicle will still not shift out of P (Park), see your dealer for service.

Shifting Into Park

⚠ Warning

Parking on grades with poor traction such as ice, snow, mud, or gravel may cause the vehicle to unintentionally move and could result in injury, death, and/or vehicle damage. Be sure to apply the parking brake. See *Electric Parking Brake* ⇨ *202*.

1. Apply the brake pedal and set the parking brake. See *Electric Parking Brake* ⇨ *202*.
2. Press the P (Park) button at the end of the shift lever.
3. The P indicator on the shift lever will turn red when the vehicle is in P (Park).

NOT FOR RESALE

When the vehicle is stopped, press OFF to turn off the vehicle. The vehicle will shift to P (Park) automatically unless the vehicle is in N (Neutral). See “Car Wash Mode” later in this section.

If the vehicle is shifted into P (Park) on a hill, the parking brake may apply automatically. The driver might not be able to release the parking brake using the parking brake switch; however, it should automatically release when the vehicle is shifted out of P (Park).

If OFF is pressed while at relatively high speed, instructions will display on the Driver Information Center to confirm that vehicle off mode is desired. Once confirmed, the vehicle will turn off and automatically shift to N (Neutral). When the vehicle is stopped, P (Park) can be selected

If the vehicle must be left with the propulsion system on, be sure that the vehicle is in P (Park) with the parking brake set, before leaving the vehicle. After pressing the P (Park) button, hold down the regular brake pedal. If you cannot see the P (Park) indicator in the instrument cluster, it means that the vehicle has not shifted to P (Park).

Service Shift Lever Message

A SERVICE SHIFTER SEE OWNER'S MANUAL message indicates an issue with the shift lever. If this message is a result of the vehicle automatically shifting into P (Park) and you need to move your vehicle to a safe location, try holding the shift lever in D (Drive) or R (Reverse) until the speed exceeds 16 km/h (10 mph). Have the vehicle serviced as soon as possible.

R (Reverse): If the vehicle is shifted from either R (Reverse) to D (Drive) or D (Drive) to R (Reverse) while the speed is too high, the vehicle may shift to N (Neutral). Reduce speed and try the shift again.

To shift into R (Reverse):

1. Bring the vehicle to a complete stop.
2. From the center position, move the shift lever rearward toward you, and then up.

At low vehicle speeds, R (Reverse) can be used to rock the vehicle back and forth to get out of snow, ice, or sand without damaging the drive unit. See *If the Vehicle Is Stuck* ⇨ *190*.

D (Drive):

Caution
Spinning the tires excessively or holding the vehicle in one place on a hill using only the accelerator pedal may damage the electric drive unit. The repair will not be covered by the vehicle warranty. If the vehicle is stuck, do not spin the tires. When stopping on a hill, use the brakes to hold the vehicle in place.

To shift into D (Drive):

1. Ensure the vehicle is at a complete stop.
2. From the center position, move the shift lever rearward and then down.

N (Neutral):

Caution
The vehicle is not designed to stay in N (Neutral) for extended periods of time. It will automatically shift into P (Park).

To shift into N (Neutral), move the shift lever rearward. If the vehicle is in P (Park), apply the brake pedal while moving the shift lever rearward.

NOT FOR RESALE

Car Wash Mode

This vehicle includes a Car Wash Mode that allows the vehicle to remain in N (Neutral) for use in automatic car washes.

The vehicle was neither designed nor intended to be towed with any of its wheels on the ground. If your vehicle is disabled and needs to be towed, see *Transporting a Disabled Vehicle* ⇨ *363*.

Car Wash Mode (Propulsion System Off – Driver In Vehicle)

To place the vehicle in N (Neutral) with the propulsion system off and vehicle occupied:

1. Drive to the entrance of the car wash.
2. Apply the brake pedal.
3. Shift to N (Neutral).
4. Turn off the vehicle and release the brake pedal.
5. The indicator should continue to show N. If it does not, repeat Steps 2–4.

Car Wash Mode (Propulsion System Off – Driver Out of Vehicle)

To place the vehicle in N (Neutral) with the propulsion system off and vehicle unoccupied:

1. Drive to the entrance of the car wash.
2. Apply the brake pedal.
3. Open the door.
4. Shift to N (Neutral).
5. Turn off the vehicle and release the brake pedal.
6. The indicator should continue to show N. If it does not, repeat Steps 2–5.
7. Exit the vehicle and close the door.

Car Wash Mode (Propulsion System On – Driver In Vehicle)

To place the vehicle in N (Neutral) with the propulsion system on and vehicle occupied:

1. Drive to the entrance of the car wash.
2. Apply the brake pedal.
3. Shift to N (Neutral).
4. Release the brake pedal.

Car Wash Mode (Propulsion System On – Driver Out of Vehicle)

To place the vehicle in N (Neutral) with the propulsion system on and vehicle unoccupied:

1. Drive to the entrance of the car wash.
2. Apply the brake pedal.
3. Open the door.
4. Shift to N (Neutral), then release the brake pedal.
5. The indicator should continue to show N. If it does not, repeat Steps 2–4.
6. Exit the vehicle and close the door.

One-Pedal Driving

One-Pedal Driving allows you use the accelerator pedal to decelerate to a complete stop. Completely releasing the accelerator pedal will result in aggressive deceleration. Partially lifting off the accelerator pedal allows the deceleration of the vehicle to be adjusted as desired.

Use the brake pedal if emergency braking is required.

Select Controls > See More Controls > Drive & Park > One-Pedal Driving to view and configure One-Pedal Driving settings from the infotainment display home screen.

- Select Off to disable One-Pedal Driving for traditional two-pedal driving, similar to a gasoline vehicle.

NOT FOR RESALE

- Select Normal to enable One-Pedal Driving where a moderate level of braking is applied when the accelerator pedal is released while driving.
- Select High to enable One-Pedal Driving where a strong level of braking is applied when the accelerator pedal is released while driving.

When enabled, One-Pedal Driving applies in D (Drive). The vehicle will remain in One-Pedal Driving mode, including through vehicle off and on power cycles, until manually disabled by the driver. Press the accelerator pedal to the desired speed. The brake lights will come on during substantial deceleration and when the vehicle is stopped.

If One-Pedal Driving is turned off while stopped, the vehicle will stay stopped. Press the accelerator pedal to return to two-pedal driving.

For faster access, select One-Pedal Driving in the Drive Mode app or the controls tray. If equipped, enable the controls button in the One-Pedal Driving menu to change the setting.

Touch to toggle One-Pedal Driving on or off. When turned on, One-Pedal Driving returns to the previously selected setting. To change the setting, press the Settings link in the pop-up box to go to the full One-Pedal Driving selection.

When possible, One-Pedal Driving uses regenerative braking to slow the vehicle for energy efficiency. Friction brakes may be used in some cases when regenerative braking is reduced. Friction brakes will be used to hold the vehicle after coming to a stop, and a noise may be noticed when the brakes apply.

When driving on slippery roads, it is recommended to turn off One-Pedal Driving for maximum vehicle stability. See *Winter Driving* ⇨ *190*.

One-Pedal Driving is a useful feature when towing a trailer, however, using the brake pedal may be required to slow down and hold the vehicle with large loads or steep hills. Trailer brake lights will be functional during substantial deceleration or when the vehicle is stopped. See *General Towing Information* ⇨ *299*.

While using One-Pedal Driving, the Electric Parking Brake may apply in some circumstances. This can occur when:

- The driver exits the vehicle.
- The vehicle has remained stationary for five minutes.

To resume driving, press the accelerator pedal, and the parking brake will automatically disengage.

Drive Systems

Four-Wheel Drive

This vehicle is equipped with advanced electric four-wheel drive (e4WD). The e4WD system delivers power to all four wheels, and the system adjusts automatically to the driving conditions. The e4WD system continuously varies the drive power to the front and rear wheels to maximize driving efficiency and improve driving dynamics. Your vehicle has exceptional driving capability, but care must always be taken to adjust driving style to the traffic and road conditions.

Torque Vectoring

If equipped, the torque vectoring feature of e4WD enhances vehicle performance by focusing the vehicle torque to the optimal wheel(s).

NOT FOR RESALE

The vehicle e4WD settings may be customized for the driver mode selected. See *Driver Mode Control* ⇨ *207* for more information.

Brakes

Electric Brake Boost

Vehicles equipped with electric brake boost have hydraulic brake circuits that are electronically controlled when the brake pedal is applied during normal operation. The system performs routine tests and turns off within a few minutes after the vehicle is turned off. Noise may be heard during this time. If the brake pedal is pressed during the tests or when the electric brake boost system is off, a noticeable change in pedal force and travel may be felt. This is normal.

Antilock Brake System (ABS)

The Antilock Brake System helps to prevent skidding and maintain steering control during hard braking.



If there is a problem, the Antilock Brake System warning light stays on. See *Brake System Warning Light* ⇨ *114*.

Using Antilock Brakes

Do not pump the brakes. Just hold the brake pedal down firmly. It is normal to hear and feel the Antilock Brake System operating.

Braking in Emergencies

The Antilock Brake System does not always decrease stopping distance. If a vehicle suddenly slows or stops, there may not be enough time to apply the brakes. Always allow enough following distance between your vehicle and the vehicle ahead.

The Antilock Brake System allows you to steer and brake at the same time. In many emergencies, steering to make an evasive maneuver can be more effective than braking.

Electric Parking Brake

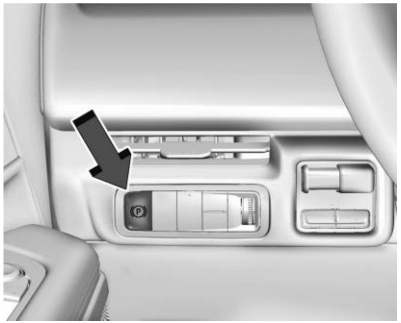

The Electric Parking Brake (EPB) can always be applied, even if the vehicle is off. In case of insufficient electrical power, the EPB cannot be applied or released. To prevent draining the battery, avoid unnecessary repeated cycles of the EPB.

The system has a red parking brake status light and an amber service parking brake warning light. See *Electric Parking Brake Light* ⇨ *115* and *Service Electric Parking Brake Light* ⇨ *115*. There are also parking brake-related Driver Information Center (DIC) messages.

NOT FOR RESALE

Before leaving the vehicle, check the red parking brake status light to ensure that the parking brake is applied.

EPB Apply

Caution
Driving with the parking brake on can overheat the brake system and cause premature wear or damage to brake system parts. Make sure that the parking brake is fully released and the brake warning light is off before driving.

To apply the EPB:

1. Be sure the vehicle is at a complete stop.
2. Press the EPB switch momentarily.

The red parking brake status light will flash and then stay on once the EPB is fully applied. If the red parking brake status light flashes continuously, then the EPB is only partially applied or there is a problem with the EPB. A DIC message will display. Release the EPB and try to apply it again. If the light does not come on, or keeps flashing, have the vehicle serviced. Do not drive the vehicle if the red parking brake status light is flashing, see your dealer.

If the amber service parking brake warning light is on, press the EPB switch. Continue to hold the switch until the red parking brake status light remains on. If the amber service parking brake warning light is on, see your dealer.

If the EPB is applied while the vehicle is moving, the vehicle will decelerate as long as the switch is pressed. If the switch is pressed until the vehicle comes to a stop, the EPB will remain applied.

The vehicle may automatically apply the EPB in some situations when the vehicle is not moving. This is normal, and is done to periodically check the correct operation of the EPB system, or at the request of other safety functions that utilize the EPB.

If the EPB fails to apply, block the rear wheels to prevent vehicle movement.

EPB Release

To release the EPB:

1. Turn the vehicle on.
2. Apply and hold the brake pedal.
3. Press the EPB switch momentarily.

The EPB is released when the red parking brake status light is off.

If the amber service parking brake warning light is on, release the EPB by pressing and holding the EPB switch. Continue to hold the switch until the red parking brake status light is off. If either light stays on after release is attempted, see your dealer.

Automatic EPB Release

The EPB will automatically release if the vehicle is running, placed into gear, and an attempt is made to drive away. Avoid rapid acceleration when the EPB is applied, to preserve parking brake lining life.

Brake Assist

Brake Assist detects rapid brake pedal applications due to emergency braking situations. It also provides additional braking to activate the Antilock Brake System if the brake pedal is not applied hard enough to activate it normally. Minor noise, brake pedal pulsation, and/or pedal movement during this time may occur. Continue to apply the brake pedal as the driving situation dictates. Brake Assist disengages when the brake pedal is released.

NOT FOR RESALE

Post-Collision Braking (Secondary Collision Mitigation Braking)

This vehicle has a post-collision braking feature that may automatically engage to help slow your vehicle down after a crash. The feature may be disengaged by fully pressing the brake or accelerator pedal.

Hill Start Assist (HSA)

Warning

Do not rely on the HSA feature. HSA does not replace the need to pay attention and drive safely. You may not hear or feel alerts or warnings provided by this system. Failure to use proper care when driving may result in injury, death, or vehicle damage. See *Defensive Driving* ⇨ *179*.

When the vehicle is stopped on a grade, Hill Start Assist prevents the vehicle from rolling in an unintended direction during the transition from brake pedal release to accelerator pedal apply. The brakes release when the accelerator pedal is applied. If the accelerator pedal is not applied within a few minutes, the Electric Parking Brake will apply. The brakes may also release under other conditions. Do not rely on Hill Start Assist to hold the vehicle.

Hill Start Assist is available when the vehicle is facing uphill in a forward gear, or when facing downhill in R (Reverse). The vehicle must come to a complete stop on a grade for Hill Start Assist to activate.

Automatic Vehicle Hold (AVH)

Warning

Do not rely on this feature. It does not replace the need to pay attention and drive safely. You may not hear or feel alerts or warnings provided by this system. Failure to use proper care when driving may result in injury, death, or vehicle damage.

Automatic Vehicle Hold prevents the vehicle from moving during the transition from brake pedal release to accelerator pedal apply when you brake to a stop.

From the front center display screen, select > Drive > Auto Hold to turn this feature on or off. The brakes release when you apply the accelerator pedal or may release under other conditions.

If you do not apply the accelerator pedal within a few minutes, the electric parking brake will apply. It will also apply if you open the driver door or unfasten the driver seat belt while Automatic Vehicle Hold is engaged.

Automatic Vehicle Hold is not available in Reverse.

Regenerative Braking

Warning

Do not charge your vehicle's battery above an 80% charge if you are going to drive down long, steep grades such as mountain passes. This provides room in the battery for regenerative braking to supplement your conventional brakes during the descent. This is especially important when towing a trailer, which puts additional stress on your vehicle's braking system.

(Continued)

NOT FOR RESALE

Warning (Continued)

See "Active Charging" under *Charging* ⇨ *122* for information on setting charge limits. See *Hill and Mountain Roads* ⇨ *189* for important information about driving on grades.

Regenerative braking takes some of the energy from the moving vehicle and turns it back into electrical energy. This energy is then stored back into the high voltage battery system, contributing to increased energy efficiency.

Regenerative power may be limited when the battery is near full charge or cold. See "Regenerative Power Limited" under *Power Indicator Gauge* ⇨ *110*. Regenerative braking supplements your vehicle's conventional brakes, especially when going downhill. See *Hill and Mountain Roads* ⇨ *189*.

The brake system uses regenerative braking, conventional hydraulic braking, or a combination of both as appropriate.

Regen on Demand

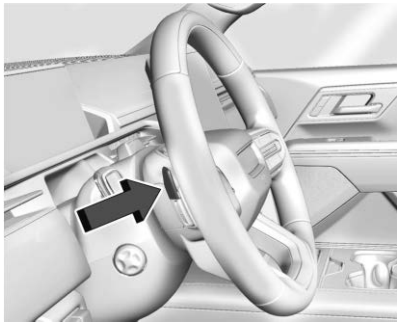

If equipped, Regen on Demand increases deceleration by pressing and holding the steering wheel paddle. Regen on Demand works in D (Drive). The accelerator pedal can be used to manage deceleration while using Regen on Demand. See *One-Pedal Driving* ⇨ *200*.

If the Regen on Demand is activated continuously during a power cycle, Regen on Demand increases deceleration after each use.

If the vehicle is brought to a complete stop while the Regen on Demand paddle is held, the vehicle will not creep forward when the paddle is released. The accelerator pedal must be pressed to move the vehicle forward.

If the vehicle is on a steep grade, the brake pedal must be used to hold the vehicle.

When available regenerative braking power is limited, the hydraulic brakes may be applied to make up the difference.

Cruise control will turn off and the brake lights may come on when this feature is activated.

Avoid using Regen on Demand under slippery road conditions. Use the brake pedal as the primary braking device.

Ride Control Systems

Traction Control/Electronic Stability Control

This vehicle has a Traction Control System (TCS) and StabiliTrak/Electronic Stability Control (ESC) system. These systems help limit wheel spin and assist the driver in maintaining control, especially on slippery road conditions. Both systems turn on automatically when the vehicle is started and begins to move.

NOT FOR RESALE

The Traction Control System activates if any of the drive wheels are spinning and beginning to lose traction. If this happens, the traction system reduces power and applies the brakes to limit wheel spin.

StabiliTrak/Electronic Stability Control activates when the vehicle senses a difference between the intended path and the direction the vehicle is actually traveling. StabiliTrak/Electronic Stability Control selectively applies braking pressure to any one of the vehicle wheel brakes to assist the driver in keeping the vehicle on the intended path.

The systems may be heard or felt while they are operating or while performing diagnostic checks. This is normal and does not mean there is a problem with the vehicle.

It is recommended to leave both systems on for normal driving conditions, but it may be necessary to turn the Traction Control System off if the vehicle gets stuck in sand, mud, ice, or snow. See *If the Vehicle Is Stuck ⇨ 190* and "Turning the Systems Off and On" later in this section.

Trailer Sway Control is also on automatically when the vehicle is started. See *General Towing Information ⇨ 299*.

If cruise control is engaged and the Traction Control System or StabiliTrak/Electronic Stability Control begins to limit wheel spin, cruise control will disengage. Cruise control may be turned back on when road conditions allow.



The indicator light for both systems is in the instrument cluster. This light will:

- Flash when the Traction Control System is limiting wheel spin.
- Flash when StabiliTrak/Electronic Stability Control is activated.
- Turn on and stay on when either system is not working.

See *Traction Control System (TCS)/Electronic Stability Control Light ⇨ 118*.

If either system fails to turn on or to activate, a message displays in the Driver Information Center. The vehicle is safe to drive, but adjust driving accordingly.

If turns on and stays on:

1. Stop the vehicle.
2. Turn the vehicle off and wait 15 seconds.
3. Start the vehicle.
4. Drive the vehicle.

If stays on, the vehicle may need more time to diagnose the problem. If the condition persists, see your dealer.

Turning the Systems Off and On

Caution
Do not repeatedly brake or accelerate heavily when TCS is off. The vehicle driveline could be damaged.

To turn the Traction Control System on and off, in the controls app on the infotainment home screen, select Controls > See More Controls > Drive & Park > Traction Control. To turn StabiliTrak/ESC on or off, select > next to the Traction Control menu. The following options appear:

- Traction Control Off
- StabiliTrak/ESC Off and Traction Control Off

NOT FOR RESALE

- StabiliTrak/ESC On and Traction Control On

The Traction Off light displays in the instrument cluster when the traction control is turned off. When the traction control is turned back on, the Traction Off light displayed in the instrument cluster will turn off. See *Traction Off Light* ⇨ *117*.

If the Traction Control System is actively limiting wheel spin when disabled, the system will not turn off until the wheels stop spinning.

To turn StabiliTrak/Electronic stability control off, select > next to the Traction Control menu. Select the StabiliTrak/ESC Off and Traction Control Off option. The StabiliTrak/Electronic Stability Control Off light will display in the instrument cluster. See *Electronic Stability Control (ESC) Off Light* ⇨ *118*.

The Traction Control System cannot be engaged when StabiliTrak//Electronic Stability Control is off.

StabiliTrak//Electronic Stability Control automatically engages if the vehicle exceeds 56 km/h (35 mph) and cannot be turned off again until speed is reduced to under 56 km/h (35 mph). Traction control will remain off.

Entering Teen Driver will automatically enable both systems and prevent these safety features from being turned off. See *Teen Driver* ⇨ *165*.

Adding accessories can affect the vehicle performance. See *Accessories and Modifications* ⇨ *302*.

Driver Mode Control

Driver Mode Control allows the driver to adjust the overall driving experience by selecting different modes. Driver Mode Control hay have the following modes: Normal, Off Road, Tow/Haul, Terrain, Max Power and a customizable mode: My Mode. Driver mode availability and affected vehicle subsystems are dependent upon trim level, region, and optional features.

If the vehicle is in Normal mode or My mode it will stay in that mode through future on/off cycles. If the vehicle is in Off Road mode, it will return to Normal mode when the vehicle is restarted. When each mode is selected, a unique and persistent indicator is displayed in the instrument cluster.

Mode Activation

To activate each mode, open the Drive Mode app on the infotainment home screen. Activate each mode by selecting the mode icon.

Mode Descriptions

Normal Mode: Use for normal city and highway driving to provide a smooth ride. This setting provides balance between comfort and handling. There is no persistent indicator in the instrument cluster for this mode.

Off Road Mode: Use this mode for off-road recreational driving. Off Road mode should be used to improve driving at moderate speeds, on grass, gravel, dirt, unpaved roads, or snow-covered roads. The accelerator pedal is tuned for off road use. If equipped, this mode also modifies steering, suspension, active rear steer, electric Four-Wheel Drive (e4WD), EVSE, Automatic Brake System (ABS), StabiliTrak/Electronic Stability Control (ESC), and Traction Control System (TCS) performance.

For more information on off-road driving, including important warnings and precautions, see *Off-Road Driving* ⇨ *182*.

NOT FOR RESALE

Tow/Haul Mode: Use this mode when hauling heavy loads to provide increased performance and vehicle control. Tow/Haul mode adjusts the pedal map, steering, active rear steer, suspension, and TSC performance.

If equipped with a Work Truck, the Tow/Haul mode may be operated through a button on the center stack. Press  to activate Tow/Haul mode.

If the vehicle is turned off with Tow/Haul mode active and then restarted within four hours or less, Tow/Haul mode will remain active. Otherwise, the vehicle will start in Normal mode.

For more information on Tow/Haul mode, see *General Towing Information* ⇨ *299*.

Terrain Mode: Use this mode when traveling on very rough roads at very low speeds, such as a two-track or heavily rutted road. This can also be used for pulling a boat out of the water on a trailer.

When in Terrain mode, the vehicle maximizes torque for better control at lower speeds and over rough terrain. This mode modifies accelerator pedal mapping, ABS and Traction Control System performance, Electric Vehicle Sound Enhancement (EVSE), suspension, steering, active rear steer, electric All-Wheel Drive, and active braking. Speed is limited to 80 km/h (50 mph) while in Terrain mode.

When the vehicle comes to a stop on an upward grade, Automatic Vehicle Hold is engaged until the driver presses the accelerator pedal. Cruise control is disabled when in Terrain mode.

Active Braking engages while in Terrain mode. This feature applies light braking which will typically bring the vehicle to a stop.

Terrain mode will automatically exit to Tour mode if the brake temperatures become too hot, electronic parking brake becomes inoperable, or the vehicle cannot perform braking or vehicle hold.

For more information on off-road driving, including important warnings and precautions, see *Off-Road Driving* ⇨ *182* and *Hill and Mountain Roads* ⇨ *189*.

For more information on Four-Wheel Steering, see *Four-Wheel Steering* ⇨ *209*.

Max Power Mode: Use this mode for short durations. It is not intended for daily use. Max Power mode provides maximum propulsion. Engaging Max Power mode will not change the currently active drive mode but will provide additional propulsion torque for maximum acceleration.

Max Power mode will not function when the vehicle battery is low. Remaining in this mode will reduce the range of the vehicle.

Max Power mode adjusts the acceleration pedal map.

My Mode: Use this mode to personalize everyday driving. This mode allows the driver to configure the vehicle subsystem settings to their driving preferences. My Mode remains active across on/off cycles.

Through the infotainment display, the following vehicle subsystems may be available for customization in this mode:

Acceleration Feel: Relaxed, Normal, Adrenaline

Steering: Tour, Normal, Sport

Suspension: Tour, Normal, Sport

Motor Sound: Off, Normal, Sport

For a more detailed description of each selectable option, refer to “Drive Mode Customization.”

NOT FOR RESALE

Drive Mode Customization

The vehicle is equipped to modify the following settings based on vehicle content. Through the infotainment home screen, select Settings > Vehicle > Drive Mode Customization to personalize My Mode. These settings will be retained over each on/off cycle, and do not have to be reset each time the vehicle is started.

Acceleration Feel: Choose how responsive you want acceleration to feel. You can adjust the accelerator pedal to provide increased power.

Steering: Choose how responsive you want the steering to feel. You can set the steering wheel to provide more feedback, which requires more steering effort.

Suspension: Choose how responsive you want the suspension to feel. You can make the suspension stiffer or more comfortable.

Motor Sound: Customize how your vehicle sounds when you are accelerating. Your electric motor remains quiet outside but the sound you hear inside changes as you drive faster or slower.

Four-Wheel Steering

If equipped, this feature steers the vehicle with all four wheels, which reduces the vehicle turn diameter and improves maneuverability of the vehicle.

The four-wheel steering feature has three modes: Automatic, CrabWalk, and Off.

Automatic Mode: Engages when the vehicle is turned on for everyday driving in all weather conditions. Automatic mode is the default, preferred mode and can be selected at any time.

At slower speeds, the front and rear wheels turn in opposite directions. This helps the vehicle make tighter turns, such as during parking, cornering, and turning into tight spaces. At higher speeds, the front and rear wheels turn in the same direction. This improves stability of the vehicle during lane changes and wide turns.

If the Automatic mode is selected when the vehicle is in the process of turning, the mode will not engage until the turn is complete.

CrabWalk Mode: Allows the driver to turn the rear wheels at the same angle as the front wheels enabling the vehicle to move diagonally.

Off Mode: Disengages the four-wheel steering feature. The vehicle is steered with the front wheels and the rear wheels are in the forward position.

When the vehicle is turned off, the rear steering angle automatically returns to the forward position.

When the vehicle is stationary, the maximum rear steering angle may not be available until the vehicle begins to move.

Four-wheel steering is not operational when Super Cruise is active. See *Super Cruise* ⇨ *238*.

Maximum vehicle speed may be limited if the four-wheel steering system becomes inoperable.

When towing a trailer, the four-wheel steering provides enhanced stability allowing the trailer to follow the path of the tow vehicle more closely, especially during lane changes. See *General Towing Information* ⇨ *299* for more information on towing a trailer.

Driver Notification

To access four-wheel steering from the infotainment home screen, select Controls & Safety > Rear Steering or Crabwalk.

NOT FOR RESALE

If CrabWalk mode or Off mode is activated, an icon on the Driver Information Center turns on and stays on. If the Automatic mode is activated, no icon will display.

The following icons display depending on the mode activated:



CrabWalk Mode



Off Mode

The following three second pop-up messages display on the Driver Information Center when the four-wheel steering mode changes:

- Rear Wheel Steering – AUTO
- Rear Wheel Steering – CRABWALK
- Rear Wheel Steering – OFF

How to Enter Automatic Mode

- Automatic mode is the default four-wheel steering mode at vehicle key-up.
- To access Automatic mode while in Off mode or CrabWalk mode, from the infotainment home screen, select Controls & Safety > Rear Steering.

Steering Behavior in Automatic Mode

- Four-wheel steering is based on front steering angle.
  - At lower vehicle speeds, the rear wheels steer opposite of the front wheels to improve turning radius.
  - At higher vehicle speeds, the rear wheels steer in same direction as the front wheels to improve handling stability.
- The exact relationship of front to rear angle is dependent on the currently selected Driver Mode Control mode.

How to Enter CrabWalk Mode

The following vehicle conditions must be true to enter CrabWalk mode:

- The vehicle speed is less than 2 km/h (1.2 mph)
- The steering wheel is not in motion
- CrabWalk mode cannot be engaged while Super Cruise is active

From the infotainment home screen, press Controls & Safety > CrabWalk > CrabWalk confirmation.

- The CrabWalk icon displays in the gauge cluster.
- A message displays when CrabWalk mode is active.
- When in CrabWalk mode, the CrabWalk button highlights.

How to Exit CrabWalk Mode

- On the infotainment home screen, press Controls & Safety > Rear Steering > CrabWalk or Rear Steering button.
- Press the CrabWalk smart control icon in the infotainment display.
- If the vehicle speed reaches higher than about 40 kmh (25 mph) for more than 10 seconds, the vehicle will automatically exit CrabWalk mode and turn on Automatic mode.

NOT FOR RESALE

CrabWalk Mode Steering Behavior

- Rear wheels steer in the same direction as front wheels at lower vehicle speeds
- Maximum rear steering angle in CrabWalk mode is dependent on the vehicle variant
- Intended to improve maneuverability for specific off-road situations

How to Enter Off Mode

To enter Off mode, the vehicle speed must be less than 2 km/h (1.2 mph).

To access Off mode while in Automatic mode, on the infotainment home screen, select Controls & Safety > Rear Steering. When in Off mode, the Rear Steering button unhighlights.

How to Exit Off Mode

To access Automatic mode while in Off mode, from the infotainment screen, select Controls & Safety > Rear Steering.

Steering Behavior in Off Mode

Four-wheel steering is disengaged with rear wheels set to forward position.

Four-Wheel Steering Behavior at 0 KM/H (0 MPH)

The rear wheels may not steer to full travel when the vehicle is stationary. Additional travel may be achieved once the vehicle begins to move.

Take care to ensure the vehicle path is clear of obstacles if the rear tires steer once the vehicle is moving.

Air Suspension

If equipped, the Air Suspension feature provides full time load leveling capability along with the benefit of adjusting ride height for increased convenience and capability.

⚠ Warning

To help avoid personal injury or death, make sure the area underneath the vehicle and inside the wheel wells is clear when lowering the vehicle.

⚠ Warning

To help avoid personal injury or death, always select the lowest ride height for the current driving conditions. Higher ride heights raise the vehicle's center of gravity, increasing the chance of a rollover during extreme maneuvers.

⚠ Warning

Heavy loads on the roof rack will make the vehicle's center of gravity higher, increasing the possibility of a rollover. To avoid losing control of the vehicle, always select the normal height setting and avoid high speeds, sudden starts, sharp turns, sudden braking, or abrupt maneuvers when carrying cargo on the roof rack.

Caution

Trailer Hitch accessories, such as drop hitches, bike racks, or carrier racks, may contact the ground using lowered ride

(Continued)

NOT FOR RESALE

Caution (Continued)

height modes. Ensure proper ground clearance when using any hitch or accessory with air suspension vehicles.

Changing Ride Height

The Ride Height button is on the instrument panel to the left of the steering wheel. See *Instrument Panel Overview* ⇨ *5*.



Press either "Up" or "Down" Ride Height button to open the Ride Height menu. Select the desired ride height from the available options. After a brief pause, available selections finalize, and unavailable ride heights appear greyed out.

Select the desired ride height option:

1. Entry/Exit
2. Normal
3. Increased
4. Maximum

Ride Height Descriptions

Entry/Exit

Entry/Exit height is the lowest height option. This ride height lowers the vehicle 50 mm (2 in) for easy entry and exit, and loading and unloading of cargo.

This ride height can be selected in the Ride Height menu at any vehicle speed, but will not lower until the vehicle slows to less than 12 km/h (7 mph).

The vehicle automatically raises to Normal height from Entry/Exit height when the vehicle speed exceeds 8 km/h (5 mph) after doors have been closed. If no door has been opened after lowering to Entry/Exit height, the vehicle will return to Normal height at 29 km/h (18 mph) to give the driver more flexibility when lowering to Entry/Exit height for passenger pick up and drop off.

The driver can enable Easy Exit Vehicle Height mode to automatically lower to Entry/Exit Height when the vehicle is shifted to P (Park). From the infotainment home screen select Settings > Vehicle > Ride Height > Easy Exit Vehicle Height. When the vehicle is higher than Normal height, is in Tow/Haul mode, Off-Road mode, or senses a trailer is connected, Easy Exit Vehicle Height mode is disabled.

Aerodynamic

Aerodynamic height is 15 mm (0.5 in) lower than Normal height. The vehicle automatically lowers to Aerodynamic height when the vehicle speed exceeds 105 km/h (65 mph) to improve aerodynamics. This is not a selectable option on the Ride Height menu.

The vehicle will raise to Normal height when the vehicle speed slows to less than 48 km/h (30 mph).

Aerodynamic height is automatically disabled when a trailer is connected to the vehicle, Tow/Haul mode is active, or the vehicle is at Increased or Maximum height.

Normal

Normal height is the standard vehicle height used for everyday driving.

Increased

Increased height is 25 mm (1 in) higher than Normal height. This ride height raises the vehicle for off-road use. Increased height can be selected in the Ride Height menu while the

NOT FOR RESALE

vehicle speed is less than 80 km/h (50 mph). If the vehicle exceeds 80 km/h (50 mph), the vehicle will lower to Normal height.

Maximum

Maximum height is 50 mm (2 in) higher than Normal height. This ride height raises the vehicle for off-road use and maximum ground clearance. Maximum height can be selected in the Ride Height Menu while the vehicle speed is less than 48 km/h (30 mph). If the vehicle exceeds 48 km/h (30 mph) the vehicle will lower to Increased height.

Low Rider

Caution
To help avoid damage to the vehicle, stay clear of obstacles such as speed bumps, curbs, and rough road/uneven terrain while in Low Rider height. Continue to use caution until vehicle returns to Normal ride height or higher.

Low Rider height is 80 mm (3 in) lower than Normal height for low speed driving or parking aesthetics.

Low Rider height must be commanded by the driver by holding the down ride height button for 3 to 10 seconds while the vehicle is stationary.

To exit Low Rider height manually, select a new ride height or change driver modes. See *Driver Mode Control* ⇨ *207*. If the vehicle speed exceeds 48 km/h (30 mph), or if high acceleration is detected, the vehicle will automatically raise to Normal height.

Suspension Modes

The air suspension has two modes, Service mode and Alignment mode.

Service Mode

Service mode will disable all air suspension operation including raising and lowering the vehicle and operation of the air compressor. This mode is useful when the vehicle is being towed on a flat bed or when any work under the vehicle is being performed.

To access Service mode from the infotainment home screen, select Settings > Vehicle > Suspension > Service Mode > On or Off.

Service mode is recommended when the vehicle is put on a hoist or a floor jack is used to raise a corner. Service mode automatically disables when the vehicle speed exceeds 32 km/h (20 mph).

Alignment Mode

Alignment mode will optimize the vehicle height to provide the most accurate wheel alignment. This mode should be enabled once the vehicle is driven onto the alignment station.

To enable Alignment mode, ensure the vehicle is at Normal Height and shift the vehicle to N (Neutral).

To access Alignment mode from the infotainment home screen, select Settings > Vehicle > Suspension > Alignment Mode > On or Off.

Alignment mode automatically disables when the vehicle speed exceeds 16 km/h (10 mph).

Air Suspension Operation with Door(s) or Hood Open

The air suspension will temporarily suspend all height changes while the hood or any door is open.

An open tailgate does not suspend the air suspension operation.

NOT FOR RESALE

System Over-Temperature

If the air suspension is under heavy use, the system may temporarily suspend all height changes to allow the compressor to cool down. When this occurs and a height change is requested, the message LEVELING SYSTEM UNAVAILABLE will display in the instrument cluster.

Excessive Vehicle Loading

If the air suspension detects excessive vehicle loading, it will not raise above Normal height.

Air Suspension Service

If a SERVICE LEVELING SYSTEM message displays in the instrument cluster, see your authorized dealer immediately.

Cruise Control

Adaptive Cruise Control (Advanced)

Adaptive Cruise Control allows you to choose the cruise control set speed and the following gap. Read this entire section before using this system. The following gap is the following time (or distance) between your vehicle and a vehicle detected directly ahead in your path, moving in the same direction. If no vehicle is detected in your path, Adaptive Cruise Control works like regular cruise control. Adaptive Cruise Control uses a camera and radar sensor(s) to detect other vehicles.

⚠ Warning

ACC has limited braking ability and may not have time to slow the vehicle down enough to avoid a collision with another vehicle you are following. This can occur when vehicles suddenly slow or stop ahead, or enter your lane. Also see "Alerting the Driver" later in this section. Complete attention is always required while driving and you should be ready to take action and apply the brakes. See *Defensive Driving* ⇨ *179*.

⚠ Warning

ACC will not detect or brake for children, pedestrians, animals, or other objects.

Do not use ACC when:

(Continued)

Warning (Continued)

- On winding and hilly roads or when the sensors are blocked by snow, ice, or dirt. The system may not detect a vehicle ahead. Keep the entire front of the vehicle clean.
- Visibility is poor due to rain, snow, fog, dirt, insect residue, or dust; when other foreign objects obscure the camera and/or radar; or when the vehicle in front or oncoming traffic causes additional environmental obstructions, such as road spray. ACC performance is limited under these conditions.
- On slippery roads where fast changes in tire traction can cause excessive wheel slip.

If a vehicle is detected in your path, Adaptive Cruise Control can apply acceleration or limited, moderate braking to maintain the selected following gap. To disengage Adaptive Cruise Control, apply the brake pedal or press ⛐. If Adaptive Cruise Control is controlling the vehicle speed when the Traction Control System or StabiliTrak/Electronic Stability

NOT FOR RESALE

Control system activates, Adaptive Cruise Control may disengage. See *Traction Control/ Electronic Stability Control* ⇨ *205*. When road conditions allow Adaptive Cruise Control to be safely used, Adaptive Cruise Control can be turned back on.

Disabling the Traction Control System or StabiliTrak/Electronic Stability Control system will disengage Adaptive Cruise Control and prevent Adaptive Cruise Control from being re-engaged while Traction Control System or StabiliTrak/Electronic Stability Control is disabled.

Adaptive Cruise Control can reduce the need for you to frequently brake and accelerate, especially when used on expressways, freeways, and interstate highways. When used on other roads, you may need to take over the control of braking or acceleration more often.

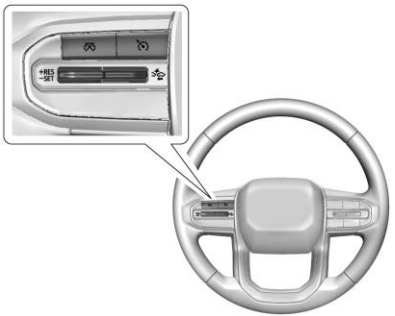

: Press to turn the system on or off. The indicator turns white on the instrument cluster when Adaptive Cruise Control is turned on.

+RES: If Adaptive Cruise Control is already activated, press the thumbwheel up briefly to resume the previous set speed or to increase the set speed. See "Increasing Speed While Adaptive Cruise Control Is at a Set Speed" later in this section.

–SET: If Adaptive Cruise Control is already activated, briefly press the thumbwheel down to –SET to set the Adaptive Cruise Control cruise speed or to decrease the set speed. See "Reducing Speed While Adaptive Cruise Control Is at a Set Speed" later in this section.

: Press to disengage Adaptive Cruise Control without erasing the selected set speed. Press and hold to switch between Adaptive Cruise Control and regular cruise control. See "Switching Between Adaptive Cruise Control and Regular Cruise Control" later in this section.

: Press the thumbwheel down to change the Adaptive Cruise Control following gap setting. Available settings are: Far, Medium, or Near.

The speedometer reading can be displayed in either English or metric units. See *Settings* ⇨ *162*. The increment value used depends on the units displayed.

Switching Between Adaptive Cruise Control and Regular Cruise Control

To switch between Adaptive Cruise Control and regular cruise control, press and hold . A message is briefly displayed in the Driver Information Center. See *Vehicle Messages* ⇨ *132*.

NOT FOR RESALE



Adaptive Cruise Control Indicator



Regular Cruise Control Indicator

⚠ Warning

Always check the cruise control indicator on the instrument cluster to determine which mode cruise control is in before using the feature. If ACC is not active, the vehicle will not automatically brake for other vehicles, which could cause a crash if the brakes are not applied manually. You and others could be seriously injured or killed.

When Adaptive Cruise Control is the selected cruise control mode and is activated, a green Adaptive Cruise Control indicator light is displayed in the instrument cluster and the following gap is displayed. When regular cruise control is the selected cruise control mode and is activated, a green cruise control indicator light is displayed in the instrument cluster, however the following gap is not displayed.

When the vehicle is turned on, the cruise control mode will be set to the last mode used before the vehicle was turned off.

Setting Adaptive Cruise Control

If Adaptive Cruise Control is on but not engaged, the thumbwheel could be pressed to −SET or +RES and engage Adaptive Cruise Control when not desired. Keep Adaptive Cruise Control off when it is not being used. Press to turn off Adaptive Cruise Control.

The set speed is the vehicle speed when another vehicle is not detected in your path.

Adaptive Cruise Control cannot be set below the minimum allowable cruise speed. For vehicles that are not equipped with Super Cruise, the minimum allowable Adaptive Cruise Control cruise speed is 25 km/h (15 mph). For vehicles equipped with Super Cruise, the minimum allowable Adaptive Cruise Control cruise speed is 5 km/h (3 mph).

To set the Adaptive Cruise Control cruise speed while moving:

1. Press .
2. Accelerate to the desired speed.
3. Briefly press the thumbwheel down to −SET and release it.
4. Gently remove your foot from the accelerator pedal.

After the Adaptive Cruise Control cruise speed is set, Adaptive Cruise Control may immediately apply the brakes if it detects a vehicle ahead that is closer than the selected following gap.

The Adaptive Cruise Control cruise speed can be set while the vehicle is stopped if Adaptive Cruise Control is on and the brake pedal is applied.



The Adaptive Cruise Control indicator light is displayed in the instrument cluster and the Head-Up Display. When Adaptive Cruise Control is on but not engaged, the Adaptive Cruise Control indicator light is lit white. When Adaptive Cruise Control is on and is engaged, the Adaptive Cruise Control indicator light is lit green.

NOT FOR RESALE

Always pay attention to the speed limit, surrounding traffic speeds, and weather conditions when selecting the set speed.

Resuming a Set Speed

If Adaptive Cruise Control is engaged at a set speed and then the brakes are applied, Adaptive Cruise Control is disengaged without erasing the set speed from memory.

To resume Adaptive Cruise Control, briefly press the thumbwheel up to +RES and release it.

- If the vehicle is moving more than 5 km/h (3 mph), the vehicle accelerates to resume the previous set speed.
- If the vehicle is stopped with the brake pedal applied, briefly press and release the thumbwheel up to +RES and then release the brake pedal. Adaptive Cruise Control will hold the vehicle until +RES or the accelerator pedal is pressed.

When Adaptive Cruise Control is active, the set speed value and the Adaptive Cruise Control indicator light are displayed green in the instrument cluster. The vehicle ahead indicator may repeatedly flash if a vehicle ahead was present and then moved. See "Approaching and Following a Vehicle" later in this section.

If Adaptive Cruise Control is active, Adaptive Cruise Control will accelerate the vehicle to the set speed under the following conditions:

- There is no vehicle ahead.
- The vehicle ahead is beyond the selected following gap.
- The vehicle speed is not being limited because of a sharp turn.

Increasing Speed While Adaptive Cruise Control Is at a Set Speed

If Adaptive Cruise Control is already activated, do one of the following:

- Use the accelerator pedal to reach the desired cruise speed. Briefly press and release the thumbwheel down to –SET and then release the accelerator pedal. The vehicle will now cruise at the higher speed.

  When the accelerator pedal is pressed, Adaptive Cruise Control will not brake because it is overridden. While Adaptive Cruise Control is overridden, the Adaptive Cruise Control indicator light will turn blue in the instrument cluster and in the Head-Up Display.
- Press and hold the thumbwheel up to +RES until the desired set speed is displayed, then release it.
- To increase the vehicle speed in smaller increments, briefly press and release the thumbwheel up to +RES. For each press, the vehicle speed increases by about 1 km/h (1 mph).
- To increase the vehicle speed in larger increments, press and hold the thumbwheel up to +RES, and then release it when the desired set speed is reached. While holding +RES, the vehicle speed increases to the next 5 km/h (5 mph) increment then continues to increase by 5 km/h (5 mph) increments until the thumbwheel is released.

The set speed can also be increased while the vehicle is stopped.

- If stopped and with the brake pedal applied, press the thumbwheel up to +RES until the desired set speed is displayed.
- If Adaptive Cruise Control is holding the vehicle at a stop and there is another vehicle directly ahead, pressing and holding the thumbwheel up to +RES will increase the set speed.

NOT FOR RESALE

- Pressing +RES will automatically resume Adaptive Cruise Control when there is no longer a vehicle ahead or the vehicle ahead is pulling away and the brake pedal is not applied.

When the Adaptive Cruise Control system determines that there is no vehicle ahead, or the vehicle ahead is beyond the selected following gap, the vehicle will accelerate to resume the Adaptive Cruise Control set speed.

Reducing Speed While Adaptive Cruise Control Is at a Set Speed

If Adaptive Cruise Control is already activated, do one of the following:

- Apply the brake pedal to reduce the vehicle speed to the desired lower cruise speed. When the desired cruise speed is reached, remove your foot from the brake pedal and briefly press the thumbwheel down to –SET. The vehicle will now cruise at the lower set speed.
- Press and hold the thumbwheel down to –SET until the desired lower cruise speed is reached, then release it.
- To decrease the vehicle speed in smaller increments, briefly press and release the thumbwheel down to –SET. For each press, the vehicle speed decreases by about 1 km/h or (1 mph).
- To decrease the vehicle speed in larger increments, press and hold the thumbwheel down to –SET and then release it when the desired lower set speed is reached. While holding the thumbwheel down to –SET, the vehicle speed decreases to the next 5 km/h (5 mph) increment, then continues to decrease by 5 km/h (5 mph) increments until the thumbwheel is released.

The set speed can also be decreased while the vehicle is stopped. When the vehicle is at a stop with the brake pedal applied, press or hold the thumbwheel down to –SET until the desired set speed is displayed, then release it.

Selecting the Follow Distance Gap

When a slower moving vehicle is detected ahead and is within the selected following distance gap, Adaptive Cruise Control will adjust the vehicle's speed and attempt to maintain the selected following distance gap.

On the steering wheel, press the thumbwheel down to change the following gap setting. Available following gap settings are: Far, Medium, or Near.

When you press the thumbwheel down, the current selected gap setting displays briefly on the instrument cluster. The selected gap setting is maintained until it is changed.



Far Gap Setting

NOT FOR RESALE

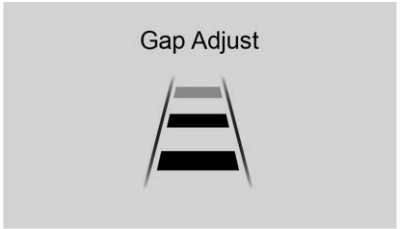

Medium Gap Setting



Near Gap Setting

If equipped, and a trailer is electrically connected, a trailer symbol is displayed near the gap setting symbol.

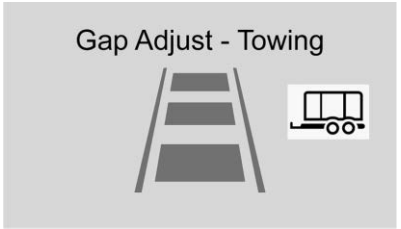

Far Gap Setting with Trailer

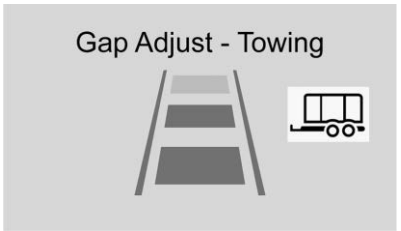

Medium Gap Setting with Trailer

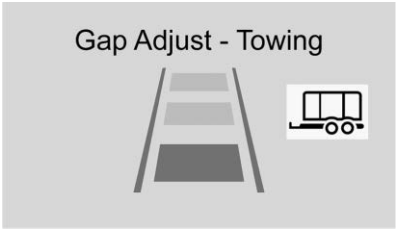

Near Gap Setting with Trailer

Since each gap setting corresponds to a following time (Far, Medium, or Near), the following distance will vary based on vehicle speed. The faster the vehicle speed, the longer the following distance will be between your vehicle and the vehicle detected ahead. Consider traffic and weather conditions when selecting the following gap. The range of selectable gaps may not be appropriate for all drivers and driving conditions.

Changing the gap setting automatically changes the alert timing sensitivity (Far, Medium, or Near) for the Forward Collision Alert feature. See *Forward Collision Alert (FCA) System* ⇨ *265*.

NOT FOR RESALE

Courtesy Gap

Press and hold the thumbwheel down when the vehicle is moving to temporarily increase the following distance gap with the vehicle ahead to allow for merging traffic.

Press and hold the thumbwheel down when stopped to cancel Adaptive Cruise Control from resuming automatically (if the stop is brief) and to remain stationary. This can be used to allow traffic to merge between you and the vehicle ahead. Press the speed control thumbwheel up to +RES or press the accelerator pedal to resume Adaptive Cruise Control.

The following distance gap will return to the original selection after hold.

Alerting the Driver

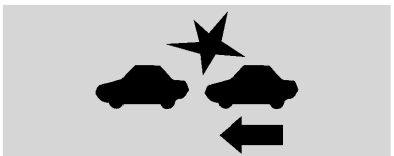

With Head-Up Display

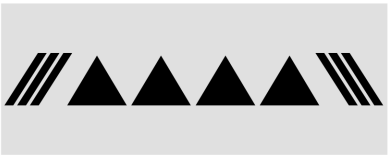

Without Head-Up Display

If Adaptive Cruise Control is engaged, driver action may be required when Adaptive Cruise Control cannot apply sufficient braking because your vehicle is approaching a vehicle ahead too quickly.

When this condition occurs, the red collision alert symbol will flash on the windshield. Either eight audible alerts will sound from the front, or both sides of the Safety Alert Seat will pulse five times. To view available settings from the infotainment screen, touch Settings > Vehicle > Speed Assist.

See *Defensive Driving* ⇨ *179*.

Approaching and Following a Vehicle



The vehicle ahead indicator light is displayed in the instrument cluster and the Head-Up Display. It only displays when a vehicle is detected in your vehicle's path and is moving in the same direction. If the vehicle ahead indicator light does not appear in the instrument cluster, then Adaptive Cruise Control will not respond to, or brake for, vehicles ahead.

While Adaptive Cruise Control is active, Adaptive Cruise Control will automatically adjust your vehicle's speed to follow a detected vehicle ahead according to the selected following gap setting. Adaptive Cruise Control may decrease your vehicle's cruise speed when following a detected vehicle ahead that is traveling slower than your Adaptive Cruise Control set speed.

Adaptive Cruise Control may apply limited braking, if necessary. When Adaptive Cruise Control automatic braking is active, the brake

NOT FOR RESALE

lights will turn on. The automatic braking may feel or sound different than if the brakes were applied manually. This is normal.

Passing a Vehicle While Using Adaptive Cruise Control

⚠ Warning

When using ACC to pass a vehicle or perform a lane change, the following distance to the vehicle being passed may be reduced. ACC may not apply sufficient acceleration or braking when passing a vehicle or performing a lane change. Always be ready to manually accelerate or brake to complete the pass or lane change.

If the set speed is high enough, and the left turn signal is used to pass a vehicle ahead in the selected following gap, Adaptive Cruise Control may assist by gradually accelerating the vehicle prior to the lane change.

Stationary or Very Slow-Moving Objects

⚠ Warning

ACC may not detect and react to stopped or slow-moving vehicles ahead of you. For example, the system may not brake for a vehicle it has never detected moving. This can occur in stop-and-go traffic or when a vehicle suddenly appears due to a vehicle ahead changing lanes. Your vehicle may not stop and could cause a crash. Use caution when using ACC. Your complete attention is always required while driving and you should be ready to take action and apply the brakes.

Irregular Objects Affecting Adaptive Cruise Control

Adaptive Cruise Control may have difficulty detecting the following objects:

- Vehicles with cargo extending from the back end.
- Non-standard shaped vehicles, such as vehicle transport, vehicles with a side car fitted, or horse carriages.
- Objects that are close to the front of your vehicle.

Adaptive Cruise Control Automatically Disengages

Adaptive Cruise Control may automatically disengage and the driver will need to manually apply the brakes to slow the vehicle if:

- The sensors are blocked.
- The Traction Control System or StabiliTrak/ Electronic Stability Control system has activated or has been disabled.
- If equipped with Air Suspension, the vehicle ride height is outside normal operating range. See *Air Suspension* ⇨ *211*.
- There is a fault in the system.
- The radar falsely reports a blockage when driving in a remote area with no other vehicles or roadside objects.

A Driver Information Center message may display to indicate that Adaptive Cruise Control is temporarily unavailable.

The Adaptive Cruise Control indicator light will turn white when Adaptive Cruise Control is disengaged.

NOT FOR RESALE

In some cases, when Adaptive Cruise Control is temporarily unavailable, regular cruise control may be used. See "Switching Between Adaptive Cruise Control and Regular Cruise Control" previously in this section. Always consider driving conditions before using either cruise control mode.

Notification to Resume Adaptive Cruise Control

⚠ Warning

If ACC has stopped the vehicle, and if ACC is disengaged, turned off, or canceled, the vehicle will no longer be held at a stop. The vehicle can move. When ACC is holding the vehicle at a stop, always be prepared to manually apply the brakes.

⚠ Warning

Leaving the vehicle without placing it in P (Park) can be dangerous. Do not leave the vehicle while it is being held at a stop by ACC. Always place the vehicle in P (Park) and turn it off before leaving the vehicle.

Adaptive Cruise Control will maintain a following gap distance behind a detected vehicle, and can slow down your vehicle to a stop behind that vehicle.

If the stopped vehicle ahead has driven away and Adaptive Cruise Control has not resumed, the vehicle ahead indicator will flash as a reminder to check traffic ahead before proceeding. In addition, the left and right sides of the Safety Alert Seat will pulse three times, or three audible alertss will sound. To view available settings from the infotainment screen, touch Settings > Vehicle > Speed Assist > Alert Type > Adaptive Cruise Go Notifier.

If equipped with Driver Attention System located on top of the steering column, when the vehicle ahead drives away, and the Driver Attention System determines that the driver's attention is on the road ahead, Adaptive Cruise Control automatically resumes. For more information, see "Attention to the Road" in *Super Cruise* ⇨ *238*.

If necessary, briefly press and release the thumbwheel up to +RES or apply the accelerator pedal to resume Adaptive Cruise Control.

If stopped for more than two minutes, or if the driver door is opened and the driver seat belt is unbuckled, the Adaptive Cruise Control system automatically applies the Electric Parking Brake to hold the vehicle. The Electric Parking Brake light will turn on. To release the Electric Parking Brake, press the accelerator pedal. See *Electric Parking Brake* ⇨ *202*.

A Driver Information Center warning message may display indicating to shift to P (Park) before exiting the vehicle.

Adaptive Cruise Control Override

⚠ Warning

The ACC will not automatically apply the brakes if your foot is resting on the accelerator pedal. You could crash into a vehicle ahead of you.

If you apply the accelerator pedal while Adaptive Cruise Control is engaged, the Adaptive Cruise Control indicator light turns blue in the instrument cluster and the Head-Up Display indicating that Adaptive Cruise Control braking will not occur. Adaptive Cruise Control will resume operation when the accelerator pedal is released.

NOT FOR RESALE

Curves in the Road

⚠ Warning

On curves, ACC may not detect a vehicle ahead in your lane. You could be startled if the vehicle accelerates up to the set speed, especially when following a vehicle exiting or entering exit ramps. You could lose control of the vehicle or crash. Do not use ACC while driving on an entrance or exit ramp. Always be ready to use the brakes if necessary.

⚠ Warning

On curves, ACC may respond to a vehicle in another lane, or may not have time to react to a vehicle in your lane. You could crash into a vehicle ahead of you, or lose control of your vehicle. Give extra attention in curves and be ready to use the brakes if necessary. Select an appropriate speed while driving in curves.

Adaptive Cruise Control may operate differently when the vehicle approaches a sharp curve in the road ahead. If the Adaptive Cruise Control system detects that a curve is too sharp, Adaptive Cruise Control may temporarily reduce the vehicle speed while navigating the curve.

The curve speed control indicator light may illuminate green when Adaptive Cruise Control is actively controlling the vehicle speed and detects a sharp curve in the road ahead.

Adaptive Cruise Control may automatically increase the vehicle speed when exiting out of the curve, however Adaptive Cruise Control will not exceed the set speed.

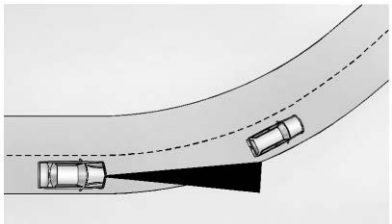

When following a vehicle and entering a curve, Adaptive Cruise Control may not detect the vehicle ahead and accelerate to the set speed. When this happens, the vehicle ahead indicator will not appear.

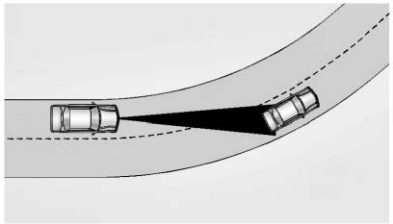

Adaptive Cruise Control may detect a vehicle that is not in your lane and apply the brakes.

Adaptive Cruise Control may occasionally provide an alert and/or braking that is considered unnecessary. It could respond to vehicles in different lanes or stationary objects when entering or exiting a curve. This is normal operation. The vehicle does not need service.

Other Vehicle Lane Changes

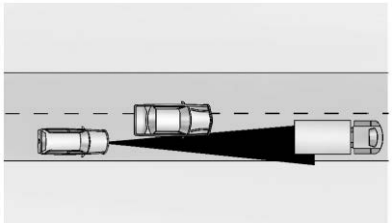

NOT FOR RESALE

Adaptive Cruise Control will not detect a vehicle ahead until it is completely in the lane. You may need to manually apply the brakes.

Objects Not Directly in Front of Your Vehicle

The Adaptive Cruise Control system may not be able to detect all objects in front of the vehicle if:

- The vehicle or object ahead is not within your lane.
- The vehicle ahead is shifted, not centered, or is shifted to one side of the lane.

Driving in Narrow Lanes

Vehicles in adjacent traffic lanes or roadside objects may be incorrectly detected when located along the roadway.

Do Not Use Adaptive Cruise Control on Hills

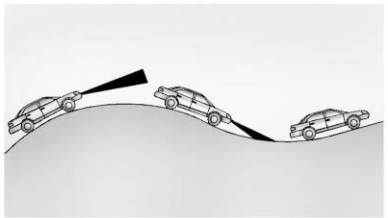

Do not use Adaptive Cruise Control when driving on steep hills. Adaptive Cruise Control will not detect a vehicle ahead.

Towing with Adaptive Cruise Control

If equipped when towing a trailer, Adaptive Cruise Control driving characteristics such as following gap, acceleration rates, and braking rates may be modified to provide a better towing experience.

When Adaptive Cruise Control is used with vehicles equipped with an aftermarket trailer brake controller, disengage Adaptive Cruise Control before applying the manual trailer brake. Adaptive Cruise Control will not automatically disengage when the manual trailer brake is applied.

Adaptive Cruise Control may be used when towing a trailer if the trailer is within the GM-approved allowable size and weight limits. See *General Towing Information* ⇨ *299*.

When towing a trailer with Adaptive Cruise Control, it is important to properly set the Trailer Gain. See *General Towing Information* ⇨ *299* for information about the Trailer Gain adjustment procedure.

Use Tow/Haul mode when driving down steep hills or mountain grades, or when hauling heavy loads. See *Driver Mode Control* ⇨ *207*.

Disengaging Adaptive Cruise Control

There are four ways to disengage Adaptive Cruise Control:

- Press .
- Lightly apply the brake pedal.
- Apply the Regen on Demand steering wheel paddle.
- Press .

Erasing Speed Memory

The Adaptive Cruise Control set speed is erased from memory if is pressed and when the vehicle is turned off.

Auto Set Speed

⚠ Warning

When using Auto Set Speed with ACC, the auto set speed may not always be updated when the speed limit changes. The system

(Continued)

NOT FOR RESALE

Warning (Continued)

also does not set the vehicle speed to speed limits shown with supplementary traffic signs, for example in construction zones. Always be attentive to your surroundings and adhere to posted speed limit signs.

If equipped, the Auto Set Speed function uses detected road speed limits to assist setting the vehicle speed while ACC is engaged.

You can enable or disable this feature through vehicle settings. To view available settings from the infotainment screen, touch Settings > Vehicle > Speed Assist.

When ACC is engaged and Auto Set Speed is enabled, the vehicle will:

- use the road speed limit to maintain a set vehicle speed.
- change the ACC set speed to match the new road speed limit.

Increase or decrease ACC set speed at any time using the SET– or RES+ buttons, to a predefined limit. The accelerator pedal can also be used to override the set speed.

If you change ACC set speed, it will reset to the road speed limit under the following conditions:

- You pass a new road speed limit.
- ACC set speed is higher than the road speed limit, and the vehicle speed goes to or below the road speed limit.
- The accelerator pedal is used to increase the speed above road speed limit and then the pedal is released.

This function will not work when regular Cruise Control is the selected Cruise Control mode.

This function may not work for conditional speed limit signs, for example, during specific times or where workers present.

Weather Conditions Affecting Adaptive Cruise Control

Adaptive Cruise Control system operation may be limited under snow, heavy rain, or road spray conditions.

Accessory Installations and Vehicle Modifications

- Do not install or place any object around the front camera windshield area that would obstruct the front camera view.
- Do not install objects on top of the vehicle that overhang and may obstruct the front camera, such as a canoe, kayak, or other items that can be transported on top of the vehicle.
- Do not modify the hood, headlights, or fog lights, as this may limit the camera's ability to detect an object.

Cleaning the Sensing System

The camera sensor on the windshield behind the rearview mirror, and the sensors on the front of the vehicle can become blocked by snow, ice, dirt, mud, or other debris. These areas must be clean for Adaptive Cruise Control to operate properly. For proper cleaning instructions, see the section "Washing the Vehicle" in *Exterior Care* ⇨ *364*.

If driving conditions temporarily prevent normal and safe Adaptive Cruise Control operation, regular cruise control may be available. See "Switching Between Adaptive Cruise Control and Regular Cruise Control" previously in this section. Always consider driving conditions before using either cruise control system.

NOT FOR RESALE

Hands-On Steering Assist (Lane Centering Assistance)

⚠ Warning

Hands-On Steering Assist is a hands-on driver assistance feature. When using this feature, you must always keep your hands on the steering wheel and always be prepared to take immediate action. Hands-On Steering Assist provides lane centering steering assistance only by helping to maintain vehicle position in the current lane under certain, compatible conditions. Hands-On Steering Assist can only be used when Adaptive Cruise Control is enabled and engaged. Hands-on Steering Assist is not a self-driving system, does not perform all aspects of driving, and cannot accurately detect or predict all situations. Hands-On Steering Assist is not a crash avoidance system. To prevent serious injury or death, you must always supervise the driving task and always monitor the road conditions, including when Hands-on Steering Assist is engaged.

(Continued)

Warning (Continued)

Hands-On Steering Assist does:

- Not prevent crashes or warn of possible crashes.
- Not provide steering or steering assistance to avoid stopped or slow-moving vehicles, cross-traffic, construction barriers or cones, motorcycles, children, pedestrians, animals, or other objects on the road.
- Not steer or provide steering assistance in response to vehicles or objects next to your vehicle, including vehicles attempting to enter your lane.
- Not respond to traffic lights, stop signs, or other traffic control devices.
- Not respond to crossing traffic.
- Not make turns.
- Not steer to merge onto or to exit highways.
- Not steer to avoid, or steer through construction zones.
- Not respond to oncoming traffic.

(Continued)

Warning (Continued)

- Not function when lane markings are not detected or the vehicle is not centered in lane.

⚠ Warning

Failure to supervise the driving task and to respond appropriately, even while Hands-On Steering Assist is operating, can cause a crash. Hands-On Steering Assist may not respond as you would to all driving situations and may not maintain lane position under all conditions. It is extremely important to pay attention to the operation of the vehicle, even while using Hands-On Steering Assist. Do not use a hand-held device while driving, even with Hands-On Steering Assist engaged. To prevent serious injury or death:

- Always remain properly seated in the driver seat with your seat belt fastened.

(Continued)

NOT FOR RESALE

Warning (Continued)

- Always make sure traffic conditions are safe before using Hands-On Steering Assist.
- Always keep the front sensors clean.
- Always observe posted speed limits.
- Only use Hands-On Steering Assist at or below the posted speed limit.

Hands-On Steering Assist should not be used in complex or uncertain driving conditions, including:

- Not when approaching or exiting toll plazas.
- Not when approaching an intersection that is controlled with a traffic light, stop sign, or other traffic control device.
- Not when lane markings are not present or cannot be detected. For example, there is too much glare, weather conditions are poor, or lanes are poorly marked.
- Not on slippery or icy roads.

(Continued)

Warning (Continued)

- Not in adverse weather conditions, including rain, sleet, fog, ice, or snow.
- Not on winding or hilly roads.
- Not during heavy or emergency braking.
- Not when towing a trailer that does not meet GM approved guidelines.
- Not in a highway exit lane.

Hands-On Steering Assist can only help the driver maintain a lane-centered position. You may need to respond to traffic events by steering, braking, or accelerating. Hands-On Steering Assist cannot determine whether you are awake, asleep, impaired, or properly focused on safe driving. If you are not attentive with your hands on the wheel and eyes on the road, when Hands-On Steering Assist disengages, the vehicle could crash into other vehicles, drive out of the lane, or drive off the road. See *Defensive Driving* ⇨ *179*.

⚠ Warning

Hands-On Steering Assist may not detect lane markings while traveling on curved roads. If this occurs, the vehicle could drift out of your lane of travel when Hands-On Steering Assist is engaged. Hands-On Steering Assist may also abruptly disengage more often around sharp curves especially when towing a trailer. To prevent crashes, always pay attention to the road and always be prepared to take immediate action by firmly steering the vehicle. You are always responsible for the safe operation of the vehicle, especially braking, steering, and controlling the speed and distance from other vehicles.

If equipped and enabled, Hands-On Steering Assist helps keep your vehicle centered in its lane using the front camera module to detect lane markings, steering wheel touch sensors to monitor hand placement, and the Driver Attention System to confirm your eyes are on the road.

Hands-On Steering Assist provides only steering assistance, it does not steer for you and requires you to keep your hands on the

NOT FOR RESALE

steering wheel at all times. When using this feature, the vehicle will maintain a set speed and following distance from a lead vehicle.

The Hands-On Steering Assist feature works with Adaptive Cruise Control and Super Cruise, if equipped. See *Adaptive Cruise Control (Advanced)* ⇨ *214* and *Super Cruise* ⇨ *238*.

Hands-On Steering Assist differs from Lane Keep Assist, which offers limited steering correction only when a lane departure is detected, by providing continuous steering assistance when engaged. See *Lane Keep Assist (LKA)* ⇨ *279*.

To view available settings from the infotainment app screen, select Settings > Vehicle > Lane Centering Assistance.

Hands-On Steering Assist Requirements

Hands-On Steering Assist is designed to operate only when:

- The vehicle has an active Connected Service plan through OnStar.
- Adaptive Cruise Control is engaged. See *Adaptive Cruise Control (Advanced)* ⇨ *214*.
- The system detects the driver's hands are on the steering wheel.
- The Driver Attention System detects the driver's head and eyes are directed toward the road ahead.
- The driver's seat belt is buckled.
- The lane markings are clearly visible and detectable by the system.
- The outside temperature is not too cold (i.e., not below 15° F (-9° C)).
- The vehicle speed is less than approximately 85 mph (137 km/h).
- Teen Driver, if equipped, is not active.
- The camera and radar sensors are functioning and not covered, obstructed, or damaged.
- Adjustable Ride Height, if equipped, must be at Normal ride height.
- There are no other conditions preventing the system from working properly.

Hands-On Steering Assist Limitations

Hands-On Steering Assist cannot provide sufficient lane steering assistance to keep the vehicle centered in all driving conditions. It will not change lanes and does not provide automatic lane changing – it provides lane centering assistance only within your current lane of travel. If the feature is unable to provide sufficient lane centering assistance, it may disengage abruptly with little advanced warning.

This feature may not be able to provide sufficient lane centering assistance in the following conditions:

- The required steering effort to maintain lane centering exceeds the system limit – for example, when the curve in the road is too tight or the curvature of the road combined with your speed exceeds the feature's steering assist capabilities.
- Lane markings are not present or cannot be detected, or when lanes merge or split. For example, there is too much glare, weather conditions are poor, or lanes are poorly marked.
- The area you are driving in is under construction or roadwork is in progress.
- The front windshield camera and/or the front radar are blocked.

Operating Hands-On Steering Assist

1. Start the vehicle.

NOT FOR RESALE

2. Enable Adaptive Cruise Control by pressing the Adaptive Cruise Control button on the steering wheel. The white Adaptive Cruise Control light displays in the instrument cluster.
3. Enable Hands-On Steering Assist and Super Cruise, if equipped, by pressing the Super Cruise button on the steering wheel.
   - The white Hands-On Steering Assist light displays in the instrument cluster.

     Adaptive Cruise Control, Hands-On Steering Assist, and Super Cruise, if equipped, will remain enabled the next time you start the vehicle.
4. Engage Adaptive Cruise Control by pressing the SET+/RES− button. The green Adaptive Cruise Control light displays with the set speed limit.

   Once Adaptive Cruise Control is engaged, when your vehicle is centered in the lane and detects lane markers, Hands-On Steering Assist begins providing lane centering assistance. When Hands-On Steering Assist is engaged, the white Hands-On Steering Assist light displays green.

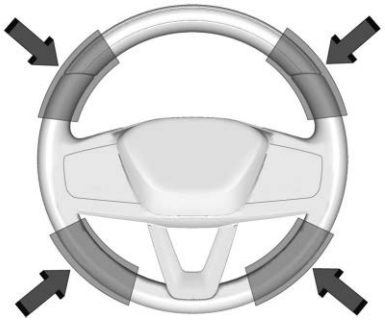

Steering Wheel Sensors

5. Hold the steering wheel firmly with both hands using the steering wheel sensor locations shown.

To adjust vehicle position within the lane, change lanes, turn, or maneuver around any object in your path, you must manually take control of the steering. Once you center the vehicle back in the lane, the feature will automatically reengage and actively provide hands-on lane centering steering assistance.

Manually Canceling Hands-On Steering Assist

Hands-On Steering Assist can be manually canceled by any of the following actions:

- Pressing the Super Cruise button on the steering wheel.
- Disengaging Adaptive Cruise Control by: stepping lightly on the brake pedal, pressing the Adaptive Cruise Control, or canceling the speed setting buttons on the steering wheel.
- Pressing the Regen On Demand paddle, if equipped.

Automatic Disengagement of Hands-On Steering Assist

Warning

Hands-On Steering Assist will not maintain the vehicle's speed while the Hands-On Steering Assist light is flashing red. If the Hands-On Steering Assist light flashes red, immediately take action by firmly steering the vehicle to prevent serious

(Continued)

NOT FOR RESALE

Warning (Continued)

injury or death. If the feature is engaged, the green Hands-On Steering Assist light is illuminated, and you remove your hands from the steering wheel or eyes from the road, do not promptly return them, and ignore the alerts and messages, including the red flashing Hands-On Steering Assist light, the system will begin to apply the brakes and slowly bring your vehicle to a stop within the lane of travel, activate the hazard lights, and call OnStar.

Disengagement Due to System Limitations

The system will automatically disengage when an external condition or system limitation exists, for example, no lane markers are detected or the curve in the road is too tight.

The system may disengage frequently and abruptly due to system limitations with little advance warning.

Disengagement Due to Hands-Off or Eyes-Off

The system will automatically disengage when the steering wheel sensors detect your hands are not on the steering wheel and your head and eyes are not directed toward the road ahead.

Warnings Before Disengagement

Before the system disengages due to system limitations or because your hands are off the steering wheel or your eyes are not focused on the road, you will receive one or more of the warnings below depending on the circumstances prompting your immediate action:

- An alert message displays in the Driver Information Center
- The Hands-On Steering Assist lights may flash green or turn red
- Audible alerts sound
- The Safety Alert Seat vibrates, if equipped and enabled

When this happens, you must take immediate action by firmly steering the vehicle and ensure your eyes are on the road ahead. When the feature is engaged and no system limitations are present and your hands are off the steering wheel or eyes off the road, if you continue to ignore the alerts and fail to put your hands back on the steering wheel or eyes on the road, the system will begin to apply the brakes and slowly bring your vehicle to a stop within the lane of travel, activate the hazard lights, and call OnStar. See *Super Cruise* ⇨ *238*.

Repeated misuse – hands off the steering wheel or eyes off the road – and disregard of these warnings may result in being locked out of the feature for a period of time. Repeated lockout events may delay the feature availability.

Caution

If you drive with your hand (or hands) on the top of the steering wheel, you may block the Driver Monitoring System camera, which is mounted on the top of the steering column. See *Defensive Driving* ⇨ *179*. If this camera is blocked, it cannot confirm that you have your eyes and attention on the road, and the system will alert you that it is disengaging if you do not put your eyes on the road. For the best experience with Hands-On Steering Assist, avoid holding the top center of the steering wheel to drive.

NOT FOR RESALE

Hands-On Steering Assist will not provide steering assistance and will enter standby mode if a turn signal is active, if it detects that you are accelerating or braking quickly, or if you are intentionally steering across a lane marker.

When Adaptive Cruise Control is active and Hands-On Steering Assist is automatically disengaged, whether due to a system limitation or failure to keep hands on the steering wheel and eyes on the road, Hands-on Steering Assist remains in standby mode and will automatically reengage when the vehicle is again centered in the lane and the system detects lane markers.

How Adaptive Cruise Control, Hands-On Steering Assist, and Super Cruise Work Together

⚠ Warning

Taking your hands off the wheel can result in loss of control of the vehicle. Never take your hands off the wheel unless and until the steering lightbar is green, which indicates that Super Cruise Hands-Free is engaged.

Adaptive Cruise Control, Hands-On Steering Assist, and Super Cruise, if equipped, provide increasing levels of driver assistance as follows:

1. Adaptive Cruise Control
   - Maintains your speed and following distance
2. Hands-On Steering Assist
   - Adds lane centering and steering support
3. Super Cruise, if equipped
   - Allows for hands-free driving assistance, including steering, braking, and acceleration
   - Limited to Super Cruise mapped and enabled roads

The system automatically engages the highest level of assistance available and appropriate based on the road and operating conditions. The level of assistance available and its status, whether enabled (in standby mode), engaged (active mode), or when disengaging, is displayed in the instrument cluster, message alerts in the Driver Information Center, and the steering wheel lightbar. See “Driver Assistance Levels and Display Indicators in Increasing Order of Assistance” later in this section.

Trailer Towing With Hands-On Steering Assist

Hands-On Steering Assist may be used when towing a trailer when the attached trailer is within size and weight limits designated in the Trailer Towing section. See *General Towing Information* ⇨ *299*.

When Hands-On Steering Assist is used with vehicles equipped with an aftermarket trailer brake controller, disengage Hands-On Steering Assist before applying the manual trailer brake. Hands-On Steering Assist will not automatically disengage when manual trailer brake is applied.

Hands-On Steering Assist can recognize when the vehicle is pulling a trailer and adjusts the following gap for extra stopping distance.

NOT FOR RESALE

Hands-On Steering Assist Message Summary

Alert messages for this feature are displayed in the Driver Information Center. See *Instrument Cluster* ⇨ *108*. All alert messages refer to this feature as "Lane Centering Assistance".

Hands-on lane centering on but not active.	• Hands-On Steering Assist is enabled but not actively providing lane centering steering assistance. Hands-On Steering Assist has been temporarily overridden by the driver manually taking over steering control, for example, to manually change lanes.
Lane centering active. Keep hands on.	• Hands-On Steering Assist is actively providing steering assistance.
Take vehicle control.	• Hands-On Steering Assist is prompting you to take full manual control of steering immediately. If you fail to immediately resume full manual steering control, the system will disengage.
Lane centering assistance unavailable.	• Rain or snow is inhibiting the system's ability to see lane markers. • Direct sunlight is on the front camera. • There are missing or poor lane markings on the road. • There is sun glare on the road surface. • There is heavy rain, puddles, road spray, or inclement weather conditions that are affecting system performance. • Adaptive Cruise Control is not enabled.
Keep eyes on road while using lane centering.	• Alert for you to pay attention to the road.
Keep hands on for lane centering.	• Alert for you to keep hands on the steering wheel.

NOT FOR RESALE

Lane centering assistance locked out.	• You did not take control of the vehicle when prompted by the Hands-On Steering Assist system. The Hands-On Steering Assist system will be disabled until the vehicle is turned off and back on.
Lane centering unavailable. Can't see face.	• Sun is shining into the Driver Attention System camera. • Sun glare is on the driver's face. • Cups, food, hands, or other objects are obscuring the Driver Attention System view of the driver's face. • The steering column is pointed too high or low for the Driver Attention System to detect the driver. • Adjust the steering column or the seat if the message occurs frequently.

NOT FOR RESALE

Driver Assistance Levels and Display Indicators in Increasing Order of Assistance

Driver Assistance Feature	Instrument Cluster Light and Color	Steering Wheel Lightbar	Status of Driver Assistance Feature
Adaptive Cruise Control	 White	Off	Adaptive Cruise Control is enabled and in standby mode.
	 Green	Off	Adaptive Cruise Control is actively controlling your speed and maintaining an appropriate and preselected following distance with the lead vehicle.
	 Blue	Off	Adaptive Cruise Control was overridden and will not brake nor maintain following distance.

NOT FOR RESALE

Driver Assistance Feature	Instrument Cluster Light and Color	Steering Wheel Lightbar	Status of Driver Assistance Feature
Hands-On Steering Assist (Lane Centering)	 White	Off	Hands-On Steering Assist is enabled but not actively providing lane centering steering assistance.
	 Green	Off	Hands-On Steering Assist is actively providing lane centering steering assistance.
	 Flashing Green	Off	Hands-On Steering Assist has detected your hands are not on the steering wheel or you are not paying sufficiently close attention to the road.

NOT FOR RESALE

Driver Assistance Feature	Instrument Cluster Light and Color	Steering Wheel Lightbar	Status of Driver Assistance Feature
Hands-On Steering Assist (Lane Centering) (Continued)	 Red or Flashing Red	Off	Hands-On Steering Assist is prompting you to take full manual control of steering immediately. If you fail to immediately resume full manual steering control, the system will disengage.
Hands-Free Super Cruise, if equipped	 White	Off	Hands-Free Super Cruise is enabled and in standby mode.
	 Green	Green	Hands-Free Super Cruise is actively steering your vehicle. Pay attention to the road and vehicle operation. Do not take your hands off the wheel until the steering wheel lightbar is solid green.

NOT FOR RESALE

Driver Assistance Feature	Instrument Cluster Light and Color	Steering Wheel Lightbar	Status of Driver Assistance Feature
Hands-Free Super Cruise, if equipped (Continued)	 Green	Flashing Green	Hands-Free Super Cruise has detected you are not paying sufficiently close attention to the road. Pay attention to the road ahead. The steering wheel lightbar will flash green as well.
	 Red	Flashing Red	Take over steering immediately. Hands-Free Super Cruise will disengage if you fail to take over steering. The steering wheel lightbar will flash red.

Connectivity

An active Connected Service plan that includes Super Cruise Services is required to use Super Cruise, if equipped, and Hands-On Steering Assist. If the vehicle is equipped with OnStar and has an active service plan, additional data may be collected through the OnStar system. This includes information about: the vehicle's operation; a crash involving the vehicle; the use of the vehicle and its features; and, in certain situations, the location and approximate GPS speed of the vehicle. If vehicle location sharing is disabled, or Terms and Conditions are not accepted, data would no longer be collected. Refer to the OnStar Terms and Conditions and Privacy Statement on the OnStar website.

For additional information on Hands-On and Hands-Free driving, see https://www.onstar.com/services/super-cruise-hands-free-driving.

NOT FOR RESALE

System Care

Caution

The Hands-On Steering Assist system is a highly sophisticated system and should only be serviced by technicians with the proper training, tools, and safety instructions, which your dealer has. Without proper training and tools the vehicle may become damaged.

The Driver Attention System's camera on the steering column, which continually monitors the driver's head movements and eye gaze location to determine driver attentiveness, has a lens cover that may become dirty over time and affect camera performance. Clean the lens cover with a soft cloth sprayed with glass cleaner. Wipe the lens gently, then dry it. Never use abrasive cloths/cleaners or corrosive chemicals on the lens cover.

Super Cruise

⚠ Warning

Super Cruise does not perform all aspects of driving, nor does it do everything a driver can do. Super Cruise only steers to maintain vehicle position in the current lane or, under some circumstances, to change lanes. Super Cruise can only be used with Adaptive Cruise Control.

Super Cruise does:

- Not prevent crashes or warn of possible crashes.
- Not steer to avoid stopped or slow-moving vehicles, cross-traffic, construction barriers or cones, motorcycles, children, pedestrians, animals, or other objects on the road.
- Not steer in response to vehicles or objects next to your vehicle, including vehicles attempting to enter your lane.
- Not respond to traffic lights, stop signs, or other traffic control devices.

(Continued)

Warning (Continued)

- Not respond to crossing traffic.
- Not make turns.
- Not steer to merge onto or to exit highways.
- Not steer to avoid, or steer through construction zones.
- Not function on surface streets.
- Not respond to oncoming traffic.
- Not function in city driving conditions.

⚠ Warning

Failure to supervise the driving task and to respond appropriately, even while Super Cruise is operating, can cause a crash. Super Cruise may not respond as you would to all driving situations and may not maintain lane position under all conditions.

It is extremely important to pay attention to the operation of the vehicle, even while using Super Cruise. Do not use a hand-

(Continued)

NOT FOR RESALE

Warning (Continued)

held device while driving, even with Super Cruise engaged. To prevent serious injury or death:

- Always remain properly seated in the driver seat with your seat belt fastened.
- Never remove your hands from the steering wheel when Super Cruise is not operating.
- Always make sure traffic conditions are safe before using Super Cruise.
- Always keep the entire vehicle and the sensors clean. Sensors are on the front, sides, and rear of the vehicle.
- Always observe posted speed limits. Only use Super Cruise at or below the posted speed limit.

Super Cruise should not be used in complex or uncertain driving conditions, including:

- Not in construction zones.
- Not when approaching or exiting toll plazas.

(Continued)

Warning (Continued)

- Not when approaching an intersection that is controlled with a traffic light, stop sign, or other traffic control device.
- Not when lane markings are not present or cannot be detected. For example, there is too much glare, weather conditions are poor, or lanes are poorly marked.
- Not on slippery or icy roads.
- Not in adverse weather conditions, including rain, sleet, fog, ice, or snow.
- Not on winding or hilly roads.
- Not for city driving.
- Not during heavy or emergency braking.
- Not on surface streets.
- Not on a road shoulder, service drive, or under an elevated freeway.
- Not when towing a trailer that does not meet GM approved guidelines.
- Not in a highway exit lane.

⚠ Warning

Super Cruise can only assist to maintain lane position, or steer to change lanes, when driving on compatible roads. You must supervise the driving task and monitor the road conditions. You may need to respond to traffic events by steering, braking, or accelerating. See Defensive Driving.

Super Cruise is:

- Not a self-driving system
- Not a crash avoidance or warning system
- Not a substitute for proper supervision of the driving task

⚠ Warning

Some state and local laws may require hands to be kept on the steering wheel at all times. Only remove your hands from the steering wheel if Super Cruise is engaged, it is safe to do so, and it is permitted by state and local laws.

NOT FOR RESALE

⚠ Warning

To prevent serious injury or death, be alert and pay special attention when passing highway exits, entrances, and crossings with Super Cruise, and be ready to take control of the vehicle when necessary. Changes in lane markings around exits and entrances can momentarily cause Super Cruise to not detect the correct lane. If this occurs, Super Cruise may attempt steering inputs to bring the vehicle back into the correct lane and, in rare circumstances, could over-correct and cause the vehicle to momentarily cross into a lane next to your vehicle unless you manually steer to maintain your lane position.

If equipped, Super Cruise is an advanced driver assistance technology that allows hands-free driving on compatible roads. Additionally, it offers support for trailering, lane changes, and enables a Hands-On Steering Assistance feature across an expanded set of roads. See *Hands-On Steering Assist (Lane Centering Assistance)* ⇨ *226*. Super Cruise works with Adaptive Cruise Control to maintain vehicle set speed and following distance. The Driver Attention System monitors your head pose and eye gaze to ensure you're paying attention to the road. The Driver Attention System does not record or save video.

Super Cruise is designed to operate only when:

- The vehicle has an active Connected Service plan through OnStar.
- Adaptive Cruise Control is engaged. See *Adaptive Cruise Control (Advanced)* ⇨ *214*.
- The Driver Attention System detects the driver's head and eyes are directed toward the road ahead.
- The driver's seat belt is buckled.
- The lane markings are clearly visible and detectable by the system.
- The outside temperature is not too cold (i.e., not below 15° F (-9° C)).
- The vehicle speed is less than approximately 85 mph (137 km/h).
- Teen Driver, if equipped, is not active.
- The camera and radar sensors are functioning and not covered, obstructed, or damaged.
- Adjustable Ride Height, if equipped, must be at Normal ride height.
- There are no other conditions preventing the system from working properly.

When Super Cruise is unavailable, a message will display with the reason. See "Super Cruise Message Summary" later in this section.

You may also press and hold on the steering wheel to have the system display the unavailability message.

Engaging Super Cruise

⚠ Warning

Super Cruise is a driver assistance system and cannot accurately detect or predict all situations. Super Cruise is not a crash avoidance system. To prevent serious injury or death, you must supervise the driving task and monitor the road conditions. You may need to respond to traffic events by steering, braking, or accelerating. See *Defensive Driving* ⇨ *179*. Super Cruise also cannot determine whether you are awake, asleep, impaired, or properly focused on safe driving. The vehicle could crash into other vehicles, drive

(Continued)

NOT FOR RESALE

Warning (Continued)

out of the lane, or drive off the road. Complete attention is always required while driving, even while using Super Cruise. Be prepared to take over steering or apply the brakes at any time.

⚠ Warning

Super Cruise may not begin steering immediately, even when Super Cruise is available and has been pressed. To prevent serious injury or death, only remove your hands from the steering wheel if the steering wheel lightbar, the Super Cruise light, and the Adaptive Cruise Control light are green.

1. Make sure the vehicle is on and Adaptive Cruise Control is enabled. You will see one of two icons: a white illuminated or a green illuminated with the set speed limit. If you do not see either of these, press on the steering wheel.
2. Press on the steering wheel to enable Super Cruise.
3. Set the desired vehicle speed using the SET-/RES+ button.

The system automatically engages the appropriate level of assistance based on availability and operating conditions. There are three possible assistance levels:

Adaptive Cruise Control: When Adaptive Cruise Control is engaged, appears green in the instrument cluster. See *Adaptive Cruise Control (Advanced)* ⇨ *214*.

Hands-On Steering Assist: If enabled, when the vehicle is centered in the lane, and displays green in the instrument cluster, the vehicle provides steering assistance to help keep itself centered in the lane. When this feature is engaged, you must keep your hands on the steering wheel. To view available settings from the infotainment app screen, select Settings > Vehicle > Lane Centering Assistance.

See *Hands-On Steering Assist (Lane Centering Assistance)* ⇨ *226*.

Super Cruise Hands-Free: When the vehicle is centered in the lane, displays green in the instrument cluster, and the steering wheel lightbar turns green, you may take your hands off the steering wheel. This is the only level that allows for hands-free driving.

Adaptive Cruise Control, Hands-On Steering Assist, and Super Cruise, will remain enabled the next time you start the vehicle.

Lane Changes

⚠ Warning

To help prevent crashes before making a lane change:

- Always check mirrors.
- Glance over your shoulder.
- Use the turn signals.

⚠ Warning

Super Cruise Lane Change may not detect a vehicle in an adjacent lane. Always supervise the driving task and monitor traffic conditions when using the Super Cruise Lane Change feature. Only request a lane change when traffic conditions are safe for a lane change, and always be ready to manually steer the vehicle.

NOT FOR RESALE

Super Cruise allows for manual, automatic, or turn signal activated lane changes. Automatic and turn signal activated lane changes are only available in Super Cruise hands-free functionality. Super Cruise Lane Change functionality may be disabled when a trailer or other accessories (e.g. bike rack, cargo tray, etc.) are detected. Do not use Super Cruise Lane Change when towing a trailer.

To view the available settings, from the infotainment app screen, touch Settings > Vehicle > Super Cruise Lane Change.

Automatic Lane Changes

Automatic lane changes are initiated by the system under the following conditions to:

- pass a slower vehicle.
- merge out of a lane that is ending.
- allow space for other vehicles to merge from a highway entrance ramp.
- follow a route set on the built-in navigation system.

To cancel an automatic lane change, activate the turn signal lever or steer manually.

Automatic Lane Change is not available when a construction zone is detected.

Turn Signal Activated Lane Changes

To initiate this type of lane change:

1. Ensure the adjacent lane is clear of traffic.
2. Activate the turn signal in the direction you want to go.
3. The system will steer the vehicle to perform the lane change.

To cancel a turn signal activated lane change, disengage the turn signal lever or steer manually.

Trailer Towing With Super Cruise

Super Cruise may be used when towing a trailer when the attached trailer is within size and weight limits designated in the Trailer Towing section. See *General Towing Information* ⇨ *299*.

When Super Cruise is used with vehicles equipped with aftermarket trailer brake controller, disengage Super Cruise before applying the manual trailer brake. Super Cruise will not automatically disengage when manual trailer brake is applied.

Super Cruise can recognize when the vehicle is pulling a trailer and adjusts the following gap for extra stopping distance. Automatic and turn signal activated lane changes are disabled for safety while trailering.

Stationary or Very Slow-Moving Objects; Cross-Traffic

⚠ Warning

Super Cruise is not a crash avoidance system and will not steer or brake to avoid a crash. Super Cruise does not steer to prevent a crash with stopped or slow-moving vehicles. You must supervise the driving task and may need to steer and brake to prevent a crash, especially in stop-and-go traffic or when a vehicle suddenly enters your lane. Always pay attention when using Super Cruise. Failure to do so could result in a crash involving serious injury or death.

NOT FOR RESALE

Curves in the Road

⚠ Warning

The vehicle could drift out of your lane of travel. To prevent crashes, always be ready to manually steer. Super Cruise may not detect your lane on curves in the road. Super Cruise may not detect the markings that show your lane. You may not have time to react to a vehicle in the lane next to your vehicle while on curves in the road. Super Cruise may hand control back to the driver more often driving around a sharp curve while towing a trailer.

Super Cruise may operate differently in sharp curves. It may drift out of your lane of travel if the curve is too sharp.

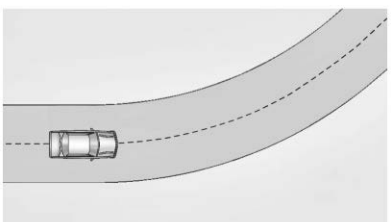

When entering a curve, Super Cruise may not detect the lane markings and may not adjust the steering enough to stay in your lane of travel. When this happens, you will need to steer the vehicle.

Super Cruise may detect other lane markings that are not in your lane and may or may not steer appropriately to maintain your lane.

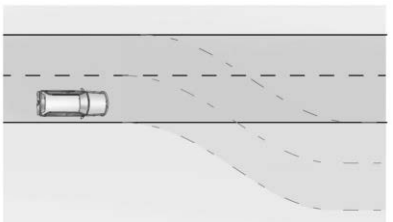

Super Cruise may occasionally provide an alert and/or steering that is considered unnecessary. It could respond to lane markings in different lanes, signs, guardrails, and other stationary objects when entering or exiting a curve. This is normal operation. The vehicle does not need service.

Other Vehicles Entering Your Lane

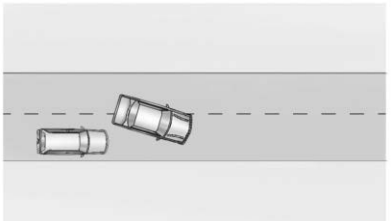

Super Cruise may not detect a vehicle that enters your lane, or may not brake fast enough to avoid a crash. You must manually brake and steer the vehicle.

Intersections and Vehicles Crossing the Road Ahead

Super Cruise will not brake the vehicle when approaching an intersection that is controlled by a traffic light or stop sign. Super Cruise will not detect vehicles crossing the road ahead, including at intersections, and will not automatically steer or brake to prevent a collision. You must manually brake and steer the vehicle.

NOT FOR RESALE

Super Cruise on Hills

Do not use Super Cruise while driving on steep hills.

Disengaging Super Cruise

To cancel or turn off Super Cruise in your vehicle, you can use one of the following methods:

- Press on the steering wheel to disengage Super Cruise.
- Press the brake pedal to disengage Super Cruise and Adaptive Cruise Control.
- Turn Adaptive Cruise Control off. This also disengages Super Cruise.
- Use the Regen on Demand paddle, if equipped, to disengage Super Cruise and Adaptive Cruise Control.

Super Cruise Status and Lightbar

⚠ Warning

Super Cruise will not maintain the vehicle's speed while the steering wheel lightbar is flashing red. If the steering wheel lightbar flashes red, immediately resume manual steering to prevent serious injury or death. If you do not resume manual steering, the

(Continued)

Warning (Continued)

vehicle will begin to slow in the same lane and eventually come to a complete stop on the road.

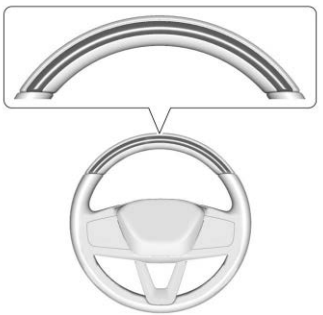

NOT FOR RESALE

Driver Assistance Levels and Display Indicators in Increasing Order of Assistance

Driver Assistance Feature	Instrument Cluster Light and Color	Steering Wheel Lightbar	Status of Driver Assistance Feature
Adaptive Cruise Control, if equipped	 White	Off	Adaptive Cruise Control is enabled and in standby mode.
	 Green	Off	Adaptive Cruise Control is actively controlling your speed and maintaining an appropriate and preselected following distance with the lead vehicle.
	 Blue	Off	Adaptive Cruise Control was overridden and will not brake nor maintain following distance.

NOT FOR RESALE

Driver Assistance Feature	Instrument Cluster Light and Color	Steering Wheel Lightbar	Status of Driver Assistance Feature
Hands-On Steering Assist (Lane Centering), if equipped	 White	Off	Hands-On Steering Assist is enabled but not actively providing lane centering steering assistance.
	 Green	Off	Hands-On Steering Assist is actively providing lane centering steering assistance.
	 Flashing Green	Off	Hands-On Steering Assist has detected your hands are not on the steering wheel or you are not paying sufficiently close attention to the road.

NOT FOR RESALE

Driver Assistance Feature	Instrument Cluster Light and Color	Steering Wheel Lightbar	Status of Driver Assistance Feature
Hands-On Steering Assist (Lane Centering), if equipped (Continued)	 Red or Flashing Red	Off	Hands-On Steering Assist is prompting you to take full manual control of steering immediately. If you fail to immediately resume full manual steering control, the system will disengage.
Hands-Free Super Cruise, if equipped	 White	Off	Hands-Free Super Cruise is enabled and in standby mode.
	 Green	Green	Hands-Free Super Cruise is actively steering your vehicle. Pay attention to the road and vehicle operation. Do not take your hands off the wheel until the steering wheel lightbar is solid green.

NOT FOR RESALE

Driver Assistance Feature	Instrument Cluster Light and Color	Steering Wheel Lightbar	Status of Driver Assistance Feature
Hands-Free Super Cruise, if equipped (Continued)	 Green	Flashing Green	Hands-Free Super Cruise has detected you are not paying sufficiently close attention to the road. Pay attention to the road ahead. The steering wheel lightbar will flash green as well.
	 Red	Flashing Red	Take over steering immediately. Hands-Free Super Cruise will disengage if you fail to take over steering. The steering wheel lightbar will flash red.

When Super Cruise is Steering

When the vehicle is positioned in the center of the lane, the steering wheel lightbar and will turn green, indicating Super Cruise is steering the vehicle.

When Super Cruise controls the steering, traffic and other conditions and laws permit, and it is safe to do so, your hands can be taken off the steering wheel.

Always pay attention to the road and the operation of the vehicle. Always monitor and be attentive of surrounding traffic, including vehicles that may cross the road in front of your vehicle.

NOT FOR RESALE

Cooperative or Manual Steering

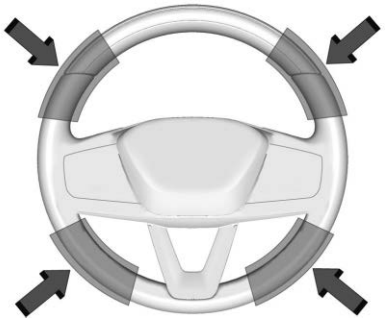

Super Cruise steering can be overridden with manual steering at any time. To begin steering manually, hold the steering wheel firmly with both hands using the steering wheel sensor locations shown.

You can adjust vehicle position within the lane by cooperatively steering the vehicle. If you steer out of the lane, the system will disengage.

When ready to allow Super Cruise to resume steering again, position the vehicle in the center of the lane, hold the steering wheel until the steering wheel lightbar turns green, and then release the steering wheel when it is safe to do so.

Escalation Requiring Driver To Take Control of the Steering Wheel

When you are required to take control of the steering wheel, , and the steering wheel lightbar will turn red, and a message will display in the Driver Information Center. When you begin steering manually, Super Cruise will disengage.

In addition, audible alerts will sound, or the Safety Alert Seat will vibrate, if equipped. To view collision and detection settings, from the infotainment app screen, touch Settings > Vehicle > Collision/Detection Systems.

The red flashing steering wheel lightbar could occur under any of the following conditions:

- The lane markings are poor, or visibility is limited.
- The Driver Attention System does not detect that the driver's head and eyes are directed toward the road ahead.
- Adaptive Cruise Control is cancelled.
- The vehicle is on a tight curve, the lane is too wide, or the vehicle enters a curve too quickly.
- The Super Cruise enabled road ends.
- The vehicle is approaching an intersection controlled by a traffic light, stop sign, or other traffic control device.
- A Super Cruise system fault occurs.
- Super Cruise is unable to complete a lane change maneuver.
- Super Cruise detects that the outside temperature is too cold to operate correctly.
- The driver's seatbelt becomes unbuckled.

The system will be locked out if driver does not take control of the vehicle when prompted. The system may be disabled for short duration. If the driver repeatedly does not take control of the vehicle when prompted, the system will be disabled until the vehicle is turned off and back on.

NOT FOR RESALE

Super Cruise Message Summary

Subscription Required - Press OnStar Button	• The owner's required Connected Services subscription may have ended. • Press the Blue OnStar button in your vehicle to speak with an OnStar representative, who can help determine the issue and what actions to take
Unavailable Turn on Adaptive Cruise Control	Adaptive Cruise Control must be on before Super Cruise can be enabled. • Set speed is not required before enabling Super Cruise. • Adaptive Cruise Control is not required to be engaged before enabling Super Cruise.
Unavailable Lane Ending	Super Cruise is disabled because the driving lane is ending.
Unavailable No Road Information	• There is no map information available for that portion of the road. Recent road reconstruction may turn off Super Cruise for that section of road until new map information is available. • The vehicle is not on the correct type of road. A controlled access freeway or compatible divided or non-divided road is required for Super Cruise. • There are lanes entering or exiting on both the left and right side of the road.
Unavailable Sensors Can't Find Lane Lines	• Rain or snow is inhibiting the system's ability to see lane lines. • Direct sunlight is on the front camera at dawn or dusk. • There are missing or poor lane line markings on the road. • There is sun glare on the road surface. • There is heavy rain, puddles, road spray, or inclement weather conditions that are affecting system performance.

NOT FOR RESALE

Unavailable Sensor Can't See Face Clearly	• Sun is shining into the Driver Attention System camera. • Dawn or dusk sun glare is on the driver's face. • Cups, food, hands, or other objects are obscuring the Driver Attention System view of the driver's face. • The steering column is pointed too high or low for the Driver Attention System to see the driver. Adjust the steering column or the seat if the message occurs frequently.
Unavailable Looking Away From Road for Too Long	The Driver Attention System detects that the driver is not looking at the road.
Unavailable Driving Too Fast	The vehicle is traveling faster than 137 km/h (85 mph). The maximum Super Cruise speed in curves will vary based on how sharp the curve is. The vehicle will automatically decrease speed if needed.
Unavailable Driving in Exit Lane	The Super Cruise system has detected that the vehicle is in an exit lane.
Unavailable GPS Signal Lost	• There is poor reception in isolated areas. • Reception is being blocked by buildings or other large structures.
Unavailable You Have Taken Vehicle Control	• The brake pedal is being pressed. • Adaptive Cruise Control has been canceled or turned off.
Unavailable Sensor Blocked	Clear snow, ice, dirt, or other contaminants from the front and rear areas of the vehicle.
Unavailable Sharp Curve	Some curves are too sharp to be navigated by the Super Cruise system. Super Cruise will be available after the curve is traveled.

NOT FOR RESALE

Unavailable Over Weight Limit	Super Cruise has detected that the trailer is over the allowable weight limit.
Unavailable Trailer Too Unstable	Super Cruise has detected that the attached trailer is causing an unstable condition. Check the trailer and/or load.
Unavailable Trailer Too Large	Trailer size (length/width) is larger than supported for Super Cruise operation.
Unavailable Lane Too Narrow	Super Cruise has detected that the lane width ahead is too narrow for Super Cruise operation while towing a trailer.
Super Cruise Unavailable	Super Cruise is unavailable for reasons not described in other messages.
Super Cruise Locked Out See Owner's Manual	The driver did not take control of the vehicle when prompted by the Super Cruise system. The Super Cruise system will be disabled until the vehicle is turned off and back on.
Unavailable Seat Belt Not Fastened	The driver seat belt is not fastened.
Unavailable Teen Driver Mode Active	Teen Driver mode is engaged.
Unavailable Snow Mode	A snow plow is attached.
Unavailable Unsupported Intersection	Super Cruise has detected an unsupported intersection.
Unavailable Approaching Toll Booth	Super Cruise has detected that there is a toll booth ahead.

NOT FOR RESALE

Unavailable Ride Height Out of Range	The vehicle ride height is out of Super Cruise operational range.
Caution Construction Zone - Drive With Care	Super Cruise has detected a construction zone.

Map Updates

Super Cruise relies on precise LIDAR based maps, these are often called High Definition (HD) Maps. These HD Maps are regularly updated by GM and sent to your vehicle. This will happen automatically as your vehicle is driven. This will not require any user input. If there is any issue with these HD Map updates, a Service Driver Assist error message will be displayed. If this message is displayed, please contact an authorized GM Service Center.

Connectivity

An active Connected Service plan that includes Super Cruise Services is required to use Super Cruise and Hands-On Steering Assist. If the vehicle is equipped with OnStar and has an active service plan, additional data may be collected through the OnStar system. This includes information about: the vehicle's operation; a crash involving the vehicle; the use of the vehicle and its features; and, in certain situations, the location and approximate GPS speed of the vehicle. Refer to the OnStar Terms and Conditions and Privacy Statement on the OnStar website.

For additional information on Hands-On and Hands-Free driving, see https://www.onstar.com/services/super-cruise-hands-free-driving.

Location Services

This setting enables or disables location services for OnStar. If you disable location services, GM may still collect vehicle location information from the vehicle in the event of an emergency (such as in the event of a crash, when the emergency call button is pressed, or where there is overheating of a high voltage battery).

System Care

Caution

The Super Cruise system is a highly sophisticated system and should only be serviced by technicians with the proper training, tools, and safety instructions, which your dealer has. Without proper training and tools the vehicle may become damaged.

The camera on the steering column has a lens cover that may become dirty over time and affect camera performance. Clean the lens cover with a soft cloth sprayed with glass cleaner. Wipe the lens gently, then dry it. Never use abrasive cloths/cleaners or corrosive chemicals of any kind on the lens cover.

NOT FOR RESALE

Super Cruise uses the front radar, front camera, rear radar, and 360-degree cameras for its operation. Clean surfaces are required for Super Cruise operation. See *Adaptive Cruise Control (Advanced)* ⇨ *214*, *Surround Vision System* ⇨ *256*, and *Lane Keep Assist (LKA)* ⇨ *279* for care information.

Advanced Driver Assistance Systems

This vehicle may have features that work together to help avoid crashes or reduce crash damage while driving, backing, and parking. Read this entire section before using these systems.

⚠ Warning

Do not rely on the Driver Assistance Systems. These systems do not replace the need for paying attention and driving safely. You may not hear or feel alerts or warnings provided by these systems. Failure to use proper care when driving may result in injury, death, or vehicle damage. See *Defensive Driving* ⇨ *179*.

(Continued)

Warning (Continued)

Under many conditions, these systems will not:

- Detect children, pedestrians, bicyclists, or animals.
- Detect vehicles or objects outside the area monitored by the system.
- Work at all driving speeds.
- Warn you or provide you with enough time to avoid a crash.
- Work under poor visibility or bad weather conditions.
- Work if the detection sensor is not cleaned or is covered by ice, snow, mud, or dirt.
- Work if the detection sensor is covered up, such as with a sticker, magnet, or metal plate.
- Work if the area surrounding the detection sensor is damaged or not properly repaired.

(Continued)

Warning (Continued)

Complete attention is always required while driving, and you should be ready to take action and apply the brakes and/or steer the vehicle to avoid crashes.

Audible or Safety Alert Seat

Some driver assistance features alert the driver of obstacles by chiming. To view available settings from the infotainment screen, touch Settings > Vehicle > Comfort and Convenience.

If equipped with the Safety Alert Seat, the driver seat cushion may provide a vibrating pulse alert instead of chiming. To view available settings from the infotainment screen, touch Settings > Vehicle > Collision/ Detection Systems.

Cleaning

Depending on vehicle options, keep these areas of the vehicle clean to ensure the best driver assistance feature performance. A Driver Information Center message may display when a system is unavailable.

NOT FOR RESALE

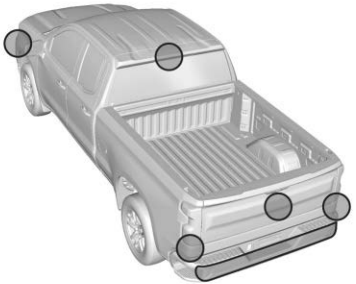



- Front and rear bumpers and the area below the bumpers
- Front grille and headlights
- Front camera lens in the front grille or near the front emblem
- Front side and rear side panels
- Outside of the windshield in front of the rearview mirror
- Side camera lens on the bottom of the outside mirrors
- Rear side corner bumpers
- Rear Vision Camera in the tailgate handle
- Rear Camera Mirror and Cargo View Camera in the Center High-Mounted Stoplight

Assistance Systems for Parking or Backing

The Rear Vision Camera, Surround Vision, Rear Park Assist, Front and Rear Park Assist, and Rear Cross Traffic Alert may help the driver park or avoid objects. Always check around the vehicle when parking or backing.

Rear Vision Camera (RVC)

When the vehicle is shifted into R (Reverse), the Rear Vision Camera displays an image of the area behind the vehicle in the infotainment display. The previous screen displays when the vehicle is shifted out of R (Reverse) after a short delay. To return to the previous screen sooner, press Home or Back on the infotainment system, shift into P (Park), or reach a vehicle speed of approximately 12 km/h (8 mph) while in D (Drive).

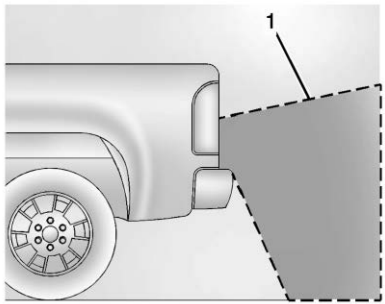

1. View Displayed by the Camera

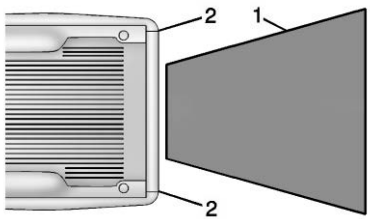

NOT FOR RESALE

1. View Displayed by the Camera
2. Corners of the Rear Bumper

Displayed images may be farther or closer than they appear. The area displayed is limited and objects that are close to either corner of the bumper or under the bumper do not display.

A warning triangle may appear on the infotainment display to show that Rear Park Assist or Rear Cross Traffic Alert has detected an object. This triangle changes from amber to red and increases in size the closer the object.

⚠ Warning

The camera(s) do not display children, pedestrians, bicyclists, crossing traffic, animals, or any other object outside of the cameras' field of view, below the bumper, or under the vehicle. Shown distances may be different from actual distances. Do not drive or park the vehicle using only these camera(s). Always check behind and around the vehicle before driving. Failure to use proper care may result in injury, death, or vehicle damage.

Surround Vision System

⚠ Warning

The Surround Vision cameras have blind spots and will not display all objects near the corners of the vehicle. Folding outside mirrors that are out of position may not display surround view correctly. Always check around the vehicle when parking or backing.

⚠ Warning

The camera(s) do not display children, pedestrians, bicyclists, crossing traffic, animals, or any other object outside of the cameras' field of view, below the bumper, or under the vehicle. Shown distances may be different from actual distances. Do not drive or park the vehicle using only these camera(s). Always check behind and around the vehicle before driving. Failure to use proper care may result in injury, death, or vehicle damage.

If equipped the Surround Vision system can display various views surrounding the vehicle in the infotainment display.

Your vehicle may be equipped with views specific to trailering. Some of these require accessory cameras to function. For more information, see your dealer.

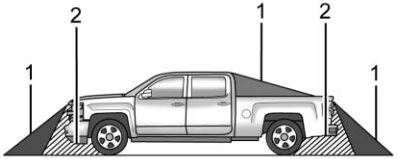

1. Views Displayed by the Surround Vision Cameras
2. Area Not Shown

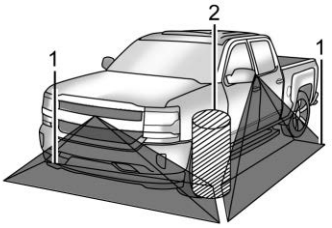

NOT FOR RESALE

1. Views Displayed by the Surround Vision Cameras
2. Area Not Shown

Camera Views

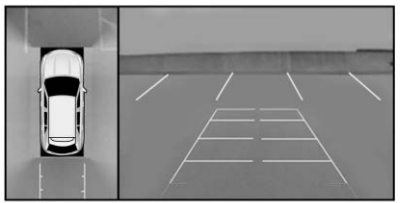

Some views may automatically display, or switch based on vehicle movement or additional safety features. For views that use a shared button, touch the button to switch between them.

Touch the camera view buttons along the bottom of the infotainment display to access each view (if equipped) :

- Front/Rear Standard View

  Displays a view of the area in front of or behind the vehicle. To access Front/Rear Standard View, select Camera app, then touch Front/Rear Standard View on the infotainment display.

  The Front Standard View also displays when the Park Assist system, if equipped, detects a close object in front of the vehicle.

  Shifting to reverse will activate Rear Standard View.

  Alerts for Rear Pedestrian Alert, Park Assist, and Rear Cross Traffic Alert are available in Rear Standard View.

- Front/Rear Overhead View

  Displays a front or rear overhead view of the vehicle. To access the Front/Rear Overhead View, select Camera app, then touch Front/Rear Overhead View on the infotainment display.

- Front/Rear Side View

  Displays a view that shows objects along the side of the vehicle. To access Front/Rear Side View, select Camera app, then touch Front/Rear Side View on the infotainment display. In some models, touching the button multiple times will alternate between front and rear views.

  Following an initial shift to R (reverse), the view will automatically switch to match the direction of gear selected.

- Hitch View

  Displays a zoomed-in view of the hitch area to assist with aligning the vehicle's hitch ball with the trailer coupler and monitoring the trailer connection. To access Hitch View, select Camera app, then touch Hitch View on the infotainment display.

  Shifting into P (Park) while in this view will automatically engage the Electric Parking Brake.

- Surround View

  Touch the Surround View icon to enable or disable the view. Displays an image of the area surrounding the vehicle. Surround View is displayed alongside the currently selected view.

- Camera App Guidance Lines

  The Camera app supports three possible guidance modes: No Guidance, Vehicle Guidance, and Trailering Guidance. The

NOT FOR RESALE

guidance lines icon may appear as a selection when a view supports guidance lines. To change guidance mode, select the appropriate guidance icon or menu item. Depending on the guidance mode and view selected, different guidance lines may appear. A grayed-out icon indicates that guidance lines are not available. Certain views do not support guidance lines.

- Cabin Glance

  If equipped, displays a live feed of the seating area on the infotainment screen. This view is used to monitor the occupants of the vehicle without needing to turn around. The video is real-time only and is not recorded or stored.

  - Standard Guidance Lines are available in Front/Rear Standard Views, Front/Rear Top-Down Views, and Surround View when the vehicle guidance mode is selected. Standard Guidance Lines show current and intended vehicle path.

⚠ Warning

Use Hitch Guidance only to help back the vehicle to a trailer hitch or, when traveling above 12 km/h (8 mph), to briefly check the status of your trailer. Do not use for any other purpose, such as making lane change decisions. Before making a lane change, always check the mirrors and glance over your shoulder. Improper use could result in serious injury to you or others.

  - The Hitch Guidance Line is available in Rear Standard View or Cargo Bed View when the Trailering Guidance mode is selected. Hitch Guidance displays a single centered guidance line on the infotainment display to assist with aligning the vehicle's hitch with a trailer coupler. Align the Hitch Guidance Line with the trailer coupler by continuously steering the vehicle to keep the guidance line centered on the coupler when backing. Park Assist overlays will not display when the Hitch Guidance Line is active.
  - Rear Trailer Guidance Lines are available in the Rear Trailer View when the Trailering Guidance mode is selected and the rear trailer camera calibration has been successfully completed. Rear Trailer Guidance Lines show the intended path (yellow) and the current path (blue) of the trailer. The current path guidance lines will converge with the intended path guidance lines.
  - Cargo Bed View

    Displays a view of the truck bed and the area behind the vehicle to assist in cargo or hitch monitoring or hitching to a fifth-wheel or gooseneck trailer.

    To view, select Cargo Bed View on the infotainment display when the Camera app is active.

    The view can be closed by selecting X, Home, or Back. When the Cargo Bed View is selected when not in D (Drive), the cargo bed lighting is turned on automatically.

NOT FOR RESALE

The feature can be enabled or disabled. To view available settings from the infotainment screen, touch Settings > Vehicle > Collision/ Detection Systems.

- Bed Hitch View

  Displays a zoomed-in view of the bed hitch area to assist with aligning the vehicle's hitch with the trailer coupler and monitoring the trailer connection. To view, select Bed Hitch View on the infotainment display when the Camera app is active. The view can be closed by selecting X, Home, or Back on the infotainment display. Shifting into P (Park) while in this view, will automatically engage the Electric Parking Brake. When the Bed Hitch View is selected when not in (D) Drive, the cargo bed lighting is turned on automatically.

  The feature can be enabled or disabled. To view available settings from the infotainment screen, touch Settings > Vehicle > Collision/ Detection Systems.

Park Assist

With Front and Rear Park Assist, as the vehicle moves at speeds of less than 9 km/h (6 mph) the sensors on the bumpers may detect objects up to 1.2 m (4 ft) in front and 1.8 m (6 ft) behind the vehicle. These detection distances may be shorter during warmer or humid weather. Blocked sensors will not detect objects and can also cause false detections. Keep the sensors clean of mud, dirt, snow, ice, and slush; and clean sensors after a car wash in freezing temperatures.

⚠ Warning

The Park Assist System is no substitute for careful and attentive driving. The Park Assist system does not detect children, pedestrians, bicyclists, animals, or objects located below the bumper or that are too close or too far from the vehicle. It is not available at speeds greater than 9 km/h (6 mph). To prevent injury, death, or vehicle damage, even with Park Assist, always check the area around the vehicle and check all mirrors before moving forward or backing.

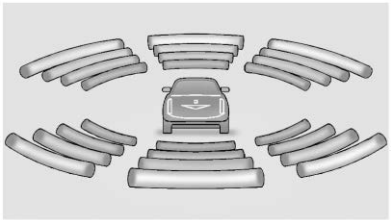

The instrument cluster may have a Park Assist display with bars that show "distance to object" and object location information for the Front and Rear Park Assist system. As the object gets closer, more bars light up and the bars change color from yellow to amber to red.

When an object is first detected in the rear, one audible alert will be heard from the rear, or both sides of the Safety Alert Seat will pulse two times. When an object is very close — <0.6 m (2 ft) in the vehicle rear or <0.3 m (1 ft) in the vehicle front — a continuous audible alert will sound from the rear or front depending on object location, or both sides of the Safety Alert Seat will pulse five times. Audible Alerts for Front Park Assist are higher pitched than for Rear Park Assist.

NOT FOR RESALE

Turning the Features On or Off



Press P on the center stack to turn on or off the Front and Rear Park Assist. The indicator light next to the button comes on when the features are on and turns off when the features have been disabled.

Front and Rear Park Assist can be turned Off or On. There is also a Park Assist Towbar that can be turned Off or On. To view available settings from the infotainment screen, touch Settings > Vehicle > Collision/Detection Systems > Park Assist. If Park Assist is turned off through vehicle personalization, the Park Assist button will be disabled. To turn Park Assist on again, select On in vehicle personalization. Setting Park Assist Towbar to On allows Park Assist to work properly with a trailer hitch. Some larger trailer hitches may not be compatible.

Turn off Park Assist when towing a trailer.

Automatic Parking Assist (APA)

Automatic Parking Assist

⚠ Warning

APA may not always detect objects in the parking space, objects that are not rigid (e.g. shrubs and chain-link fences), objects below the bumper, objects high off the ground (e.g. flatbed trucks), hanging objects, objects below ground level (e.g. large potholes), or moving objects (e.g. pedestrians, cyclists, vehicles). Always verify that the parking space is appropriate for parking a vehicle. APA may not respond to changes in the parking space, such as movement of an adjacent vehicle, or a person or object entering the parking space. APA does not detect or avoid traffic that is behind or alongside of the vehicle. Always be prepared to stop the vehicle during the parking maneuver.

If equipped, under certain conditions Automatic Parking Assist can use sensors to detect a parking spot, and, under the supervision of the driver, automatically park or unpark the vehicle. The vehicle will control gear selection, steering, acceleration, and braking, at or near idle speeds. The driver must always be prepared to apply braking, as needed. A display and audible alerts help to guide the parking maneuvers.

How to Activate Automatic Parking

To activate Automatic Parking Assist, press P AUTO on the infotainment screen, or P AUTO on the instrument panel. While driving forward at no greater than 30 km/h (18 mph), Automatic Parking Assist searches for parking spots, within the detection range, to the left or right of the vehicle. To search for a parking space to the left, turn on the left turn signal or, if available, change the side selection in the infotainment display. To choose or change the parking mode, make a selection on the infotainment display.

The Automatic Parking Assist feature cannot be used in all empty parking spots. The parking spot must:

- Be sufficiently large to fit the vehicle comfortably.
- Have an adjacent vehicle, wall, or pillar for the system to align to.
- Not be too steep.

NOT FOR RESALE

After completely passing an eligible parking spot, an audible alert sounds and a notification to stop the vehicle is displayed in the driver information center. Generally, Automatic Parking Assist selects the nearest empty parking spot behind the vehicle, but under some conditions may select a space that is further back. Slow down and bring the vehicle to a complete stop to begin.

Follow the displayed instructions. When the vehicle is ready to begin the maneuver, the steering wheel will vibrate briefly as a reminder to remove hands from the steering wheel. After the vibration stops, check your surroundings and release the brakes to begin automatic parking. As the vehicle maneuvers into the parking spot, continue to check your surroundings. Be prepared to stop to avoid vehicles, pedestrians, or objects.

A progress bar displays the status of the parking maneuver. Once automatic parking is finished and the vehicle has come to a full stop, Automatic Parking Assist will sound an audible alert and display a message indicating parking is complete.

How to Activate Automatic Unparking

To activate Automatic Parking Assist, turn the vehicle on and leave it in P (Park), then press P AUTO on the infotainment screen or the P AUTO button on the instrument panel. A screen will display with unparking options. Like automatic parking, follow the displayed instructions and continue to check your surroundings, being prepared to brake to avoid vehicles, pedestrians, or objects.

Once automatic unparking is finished and the vehicle has come to a full stop, Automatic Parking Assist will display a message requesting the driver to take control. Press the brakes and take control of the vehicle to drive away.

How to Cancel Automatic Parking/Unparking

To cancel automatic parking or automatic unparking at any time, press P AUTO or X on the infotainment display. Be prepared to resume full control of the vehicle. Automatic Parking Assist holds the vehicle until the parking brake or brake is applied, or the vehicle is shifted into P (Park). To start driving away, press the brakes and shift into D (Drive).

Certain vehicle conditions and driver interferences may also cancel automatic parking:

- The driver manually steers the vehicle.
- The driver shifts gears.
- The driver presses the accelerator pedal.
- There is a failure with the Automatic Parking Assist system.
- The electronic stability control or antilock brakes are activated.
- The parking brake is applied.
- The driver unbuckles the seat belt and opens the door.

System Limitations

Automatic Parking Assist has certain limitations. The system cannot:

- Detect whether a parking space is legal or restricted.
- Detect pavement markings or lines.
- Park in an angled spot.
- Park exactly centered in a very large spot.
- Park in a very narrow spot.
- Always detect short curbs.

NOT FOR RESALE

- Operate while towing any trailer.
- Operate with certain rear-mounted accessories, such as bike racks.
- Operate on a steep grade.
- Park the vehicle front first.

Reverse Automatic Braking (RAB)

Backing Warning and Reverse Automatic Braking

⚠ Warning

Reverse Automatic Braking is an assistance feature only and does not replace safe, attentive driving. Reverse Automatic Braking only functions when the vehicle is in R (Reverse) and the system detects an object directly behind the vehicle. Even when an object is detected, the system may not brake or stop in time to avoid a crash. To prevent property damage, injury, or death, always check your surroundings, use your mirrors when backing up, and be ready to apply the brakes. Do not rely on Reverse Automatic Braking to prevent a crash.

(Continued)

Warning (Continued)

Reverse Automatic Braking may not:

- Detect all children, pedestrians, bicyclists, animals, vehicles or objects.
- Detect an object that is below the bumper or too close or too far from the vehicle.
- Detect an object if it is partially blocked by an adjacent vehicle or other objects.
- Detect an object when weather limits visibility, such as in fog, rain, or snow.
- Operate when the sensors in the left or right corners of the rear bumper are covered with mud, dirt, snow, slush, ice, etc.
- Operate when a trailer or rear-mounted accessory, such as a bike rack or hitch-mounted cargo carrier, is attached to the vehicle.
- Operate when backing at higher speeds or very slow speeds.
- Operate when the tailgate is down.

(Continued)

Warning (Continued)

Reverse Automatic Braking may automatically brake the vehicle suddenly in situations where it is unexpected and undesired. It could respond to guardrails, signs, heavy rain or snow and other non-moving objects. To override Reverse Automatic Braking, firmly press the accelerator pedal, if it is safe to do so.

If equipped and enabled, when in R (Reverse), Backing Warning alerts of rear objects at vehicle speeds greater than 8 km/h (5 mph), and Reverse Automatic Braking may automatically brake hard at speeds between 1-32 km/h (0.5-20 mph).

Reverse Automatic Braking can be turned on or off using the infotainment system.

The Backing Warning System will chime once from the rear when an object is first detected, or pulse twice on both sides of the Safety Alert Seat. When the system detects a potential crash, chimes will be heard from the rear, or five pulses will be felt on both sides of the Safety Alert Seat. There may also be a brief, sharp application of the brakes.

NOT FOR RESALE

When the vehicle is in R (Reverse), if the system detects the vehicle is backing too fast to avoid a crash with a detected object behind your vehicle in your path, it may automatically brake hard to a stop to help avoid or reduce the harm caused by a backing crash.

Pressing the brake pedal after the vehicle comes to a stop will release Reverse Automatic Braking. If the brake pedal is not pressed soon after the stop, the electric parking brake may be set. When it is safe, press the accelerator pedal firmly at any time to override Reverse Automatic Braking.

Unexpected braking events are possible with a static installed accessory, such as a bike rack or hitch-mounted cargo carrier.

Rear Pedestrian Alert

Under certain conditions, this feature can provide alerts for a pedestrian within the system's range directly behind the vehicle. This feature only works in R (Reverse) below 12 km/h (8 mph), and detects pedestrians up to 8 m (26 ft) away during daytime driving. During nighttime driving, feature performance is very limited.



Rear Pedestrian Alert Indicator

When a pedestrian is detected within the system's range directly behind the vehicle, this symbol flashes amber on the infotainment display, along with seven chimes from the rear and/or two pulses from both sides of the driver seat. When a pedestrian is detected close to the vehicle, the symbol flashes red on the infotainment display, along with seven chimes from the rear, or if equipped, seven pulses from both sides of the driver seat.

Warning

Rear Pedestrian Alert does not automatically brake the vehicle. It also does not provide an alert unless it detects a pedestrian, and it may not detect all pedestrians if:

(Continued)

Warning (Continued)

- The pedestrian is not directly behind the vehicle, fully visible to the Rear Vision Camera (RVC), or standing upright.
- The pedestrian is part of a group.
- The pedestrian is a child.
- Visibility is poor, including nighttime conditions, fog, rain, or snow.
- The RVC is blocked by dirt, snow, or ice.
- The RVC, taillights, or back-up lights are not cleaned or in proper working condition.
- The vehicle is not in R (Reverse).

To help avoid death or injury, always check for pedestrians around the vehicle before backing up. Be ready to take action and apply the brakes. See *Defensive Driving* ➪ *179*. Keep the RVC, taillights, and back-up lights clean and in good repair.

Rear Pedestrian Alert can be set to Off or Alert. To view available settings from the infotainment screen, touch Settings > Vehicle > Collision/Detection Systems.

NOT FOR RESALE

Alerts can be set to chimes or seat pulses. To view available settings from the infotainment screen, touch Settings > Vehicle > Collision/ Detection Systems.

Rear Cross Traffic Alert (RCTA) System

⚠ Warning

Rear Cross Traffic Alert is an assistance feature only. It does not replace safe, attentive driving. To prevent property damage, injury, or death, always check your surroundings and use your mirrors before backing up. Do not rely solely on Rear Cross Traffic Alert to warn of potential collisions. Rear Cross Traffic Alert only operates while the vehicle is in R (Reverse) in a limited speed range. Rear Cross Traffic Alert may not:

- Detect all vehicles, pedestrians, bicyclists, animals, or objects too close or too far from the vehicle.

(Continued)

Warning (Continued)

- Detect an object if it is partially blocked by an adjacent vehicle or other objects.
- Detect an object when weather limits visibility, such as in fog, rain, or snow.
- Operate when the sensors in the left or right corners of the rear bumper are covered with mud, dirt, snow, slush, ice, etc.
- Operate when a trailer or rear-mounted accessory, such as a bike rack or hitch-mounted cargo carrier, are attached to the vehicle.

If equipped, Rear Cross Traffic Alert displays a red warning triangle with a left or right pointing arrow on the infotainment display to warn of traffic coming from the left or right. When an object is detected, either three audible alerts sound from the left or right, or three Safety Alert Seat pulses occur on the left or right side, depending on the direction of the detected vehicle.

Use caution while backing up when towing a trailer, as the Rear Cross Traffic Alert detection zones that extend out from the back of the vehicle do not move farther back when a trailer is attached to the vehicle.

Rear Cross Traffic Braking (RCTB)

⚠ Warning

Rear Cross Traffic Braking is an assistance feature only. It does not replace safe, attentive driving. To prevent property damage, injury, or death, always check your surroundings and use your mirrors before backing up. Do not rely solely on Rear Cross Traffic Braking to prevent collisions.

Rear Cross Traffic Braking only operates while the vehicle is in R (Reverse) in a limited speed range.

Rear Cross Traffic Braking may not:

- Detect all vehicles, pedestrians, bicyclists, animals, or objects too close or too far from the vehicle.

(Continued)

NOT FOR RESALE

Warning (Continued)

- Detect an object if it is partially blocked by an adjacent vehicle or other objects.
- Detect an object when weather limits visibility, such as in fog, rain, or snow.
- Operate when the sensors in the left or right corners of the rear bumper are covered with mud, dirt, snow, slush, ice, etc.
- Operate when a trailer or rear-mounted accessory, such as a bike rack or hitch-mounted cargo carrier, are attached to the vehicle.

Rear Cross Traffic Braking may automatically brake the vehicle suddenly in situations where it is unexpected and undesired. It could respond to guardrails, signs, heavy rain or snow and other non-moving objects. To override Rear Cross Traffic Braking, firmly press the accelerator pedal, if it is safe to do so.

If equipped and enabled, under certain conditions, RCTB may detect objects approaching from the left or right side of the rear of the vehicle. When an approaching object is detected, RCTB displays a red warning triangle with a left- or right-pointing arrow on the infotainment display, and either three audible alerts sound from the, or three pulses occur of the Safety Alert Seat in the direction of the detected object.

RCTB may apply the brake to bring the vehicle to a stop if a collision is imminent. Once stopped, the system may engage the Electric Parking Brake (EPB) to hold the vehicle. Release the EPB or press the accelerator pedal to continue driving, if it is safe to do so.

Driving With a Trailer

Use caution while backing up when towing a trailer. Rear Cross Traffic Alert and Rear Cross Traffic Braking are automatically disabled when a trailer is attached to the vehicle.

Turning the Features On or Off

Rear Cross Traffic Alert and Rear Cross Traffic Braking can be turned on or off using the infotainment system. To view available settings from the infotainment app screen, touch Settings > Vehicle > Collision/ Detection Systems.

Assistance Systems for Driving

If equipped, when driving the vehicle in a forward gear, Forward Collision Alert, Lane Departure Warning, Lane Keep Assist, Blind Zone Steering Assist, Lane Change Alert, Automatic Emergency Braking, Intersection Automatic Emergency Braking, and/or the Front Pedestrian Braking System can help to avoid a crash or reduce crash damage.

Forward Collision Alert (FCA) System

If equipped, the Forward Collision Alert system may help to avoid or reduce the harm caused by front-end crashes. When approaching a vehicle ahead too quickly, the system provides a red flashing alert on the windshield and a rapid audible alert or pulses the driver seat. Forward Collision Alert also lights an amber visual alert if following another vehicle much too closely.

Forward Collision Alert detects vehicles within a distance of approximately 60 m (197 ft) and operates at speeds above 8 km/h (5 mph).

NOT FOR RESALE

⚠ Warning

Forward Collision Alert is a warning system and does not apply the brakes. When approaching a slower-moving or stopped vehicle ahead too rapidly, or when following a vehicle too closely, Forward Collision Alert may not provide a warning with enough time to help avoid a crash. It also may not provide any warning at all. Forward Collision Alert does not warn of pedestrians, animals, signs, guardrails, bridges, construction barrels, or other objects. Be ready to take action and apply the brakes. See *Defensive Driving* ⇨ *179*.

Forward Collision Alert can be disabled. To view available settings from the infotainment screen, touch Settings > Vehicle > Collision/ Detection Systems.

Detecting the Vehicle Ahead



Forward Collision Alert warnings will not occur unless the system detects a vehicle ahead. When a vehicle is detected, the vehicle ahead indicator will display green. Vehicles may not be detected on curves, highway exit ramps, or hills, due to poor visibility; or if a vehicle ahead is partially blocked by pedestrians or other objects. Forward Collision Alert will not detect another vehicle ahead until it is completely in the driving lane.

⚠ Warning

FCA does not provide a warning to help avoid a crash, unless it detects a vehicle. FCA may not detect a vehicle ahead if the FCA sensor is blocked by dirt, snow, or ice, or if the windshield is damaged. It may also not detect a vehicle on winding or hilly roads, or in conditions that can limit visibility such as fog, rain, or snow, or if the headlights or windshield are not cleaned or in proper condition. Keep the windshield, headlights, and FCA sensors clean and in good repair.

Collision Alert

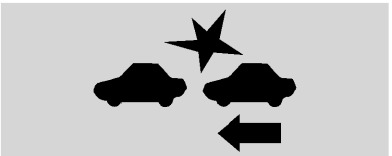

With Head-Up Display



Without Head-Up Display

When your vehicle approaches another detected vehicle too rapidly, the red Forward Collision Alert display will flash on the windshield. Also, eight rapid high-pitched audible alerts will sound from the front, or both sides of the Safety Alert Seat will pulse five times. When this Collision Alert occurs, the brake system may prepare for driver braking to occur more rapidly which can cause a brief, mild deceleration. Continue to apply the brake pedal as needed.

NOT FOR RESALE

Tailgating Alert



The vehicle ahead indicator will display amber when you are following a vehicle ahead much too closely.

Selecting the Alert Timing



The Collision Alert control is on the steering wheel. Press to set the Forward Collision Alert timing to Far, Medium, or Near. The first button press shows the current setting on the Driver Information Center. Additional button presses will change this setting. The chosen setting will remain until it is changed and will affect the timing of both the Collision Alert and the Tailgating Alert features. The timing of both alerts will vary based on vehicle speed. The faster the vehicle speed, the farther away the alert will occur. Consider traffic and weather conditions when selecting the alert timing. The range of selectable alert timings may not be appropriate for all drivers and driving conditions.

If your vehicle is equipped with Adaptive Cruise Control, changing the Forward Collision Alert timing setting automatically changes the following gap setting (Far, Medium, or Near).

Following Distance Indicator

If equipped, the following distance to a moving vehicle ahead in your path is indicated in following time in seconds on the Driver Information Center. See *Driver Information Center (DIC)* ⇨ *127*. The minimum following time is 0.5 seconds away.

If there is no vehicle detected ahead, or the vehicle ahead is out of sensor range, dashes will be displayed.

Unnecessary Alerts

Forward Collision Alert may provide unnecessary alerts for turning vehicles, vehicles in other lanes, objects that are not vehicles, or shadows. These alerts are normal operation and the vehicle does not need service.

Cleaning the System

If the Forward Collision Alert system does not seem to operate properly, this may correct the issue:

- Clean the outside of the windshield in front of the rearview mirror.
- Clean the entire front of the vehicle.
- Clean the headlights.

Automatic Emergency Braking (AEB)

⚠ Warning

AEB is an emergency crash preparation feature and is not designed to avoid crashes. Do not rely on AEB to brake the vehicle. AEB will not brake outside of its operating speed range and only responds to detected vehicles.

AEB may not:

(Continued)

NOT FOR RESALE

Warning (Continued)

- Detect a vehicle ahead on winding or hilly roads.
- Detect all vehicles, especially vehicles with a trailer, tractors, muddy vehicles, etc.
- Detect a vehicle when weather limits visibility, such as in fog, rain, or snow.
- Detect a vehicle ahead if it is partially blocked by pedestrians or other objects.

Complete attention is always required while driving, and you should be ready to take action and apply the brakes and/or steer the vehicle to avoid crashes.

⚠ Warning

AEB may automatically brake the vehicle suddenly in situations where it is unexpected and undesired. It could respond to a turning vehicle ahead, guardrails, signs, and other non-moving objects. To override AEB, firmly press the accelerator pedal, if it is safe to do so.

The Automatic Emergency Braking system may help avoid or reduce the harm caused by front-end crashes. Automatic Emergency Braking also includes Intelligent Brake Assist. When the system detects a vehicle ahead in your path that is traveling in the same direction that you may be about to crash into, it can provide a boost to braking or automatically brake the vehicle. This can help avoid or lessen the severity of crashes when driving in a forward gear. Depending on the situation, the vehicle may automatically brake moderately or hard. Always wear a seat belt and ensure that all passengers are properly restrained. This automatic emergency braking can only occur if a vehicle is detected. This is shown by the Forward Collision Alert vehicle ahead indicator being lit. See *Forward Collision Alert (FCA) System* ⇨ *265*.

The system works when driving in a forward gear above 4 km/h (2 mph). It can detect vehicles up to approximately 60 m (197 ft).

Automatic Emergency Braking may slow the vehicle to a complete stop to try to avoid a potential crash. If this happens, it may engage the electric parking brake to hold the vehicle at a stop. Release the electric parking brake or firmly press the accelerator pedal.

Intelligent Brake Assist

⚠ Warning

IBA may increase vehicle braking in situations when it may not be necessary. You could block the flow of traffic. If this occurs, take your foot off the brake pedal and then apply the brakes as needed.

⚠ Warning

Using AEB or IBA while towing a trailer could cause you to lose control of the vehicle and crash. Turn the system to Alert or Off when towing a trailer.

Intelligent Brake Assist may activate when the brake pedal is applied quickly by providing a boost to braking based on the speed of approach and distance to a vehicle ahead.

Minor brake pedal pulsations or pedal movement during this time is normal and the brake pedal should continue to be applied as needed. Intelligent Brake Assist will automatically disengage only when the brake pedal is released.

NOT FOR RESALE

Automatic Emergency Braking and Intelligent Brake Assist can be disabled. To view available settings from the infotainment screen, touch Settings > Vehicle > Collision/ Detection Systems.

A system unavailable message may display if:

- The front of the vehicle or windshield is not clean.
- Heavy rain or snow is interfering with object detection.
- There is a problem with the StabiliTrak/ Electronic Stability Control System.

The Automatic Emergency Braking system does not need service.

If the system is not working properly or is disabled, a light displays in the instrument cluster. See*Automatic Emergency Braking (AEB) Disabled Light* ⇨ *117*.

Intersection Automatic Emergency Braking System

⚠ Warning

I-AEB is an emergency crash preparation feature. Do not rely on I-AEB to brake or avoid crashes. I-AEB will not brake outside of its operating speed range and only responds to detected intersecting vehicles. I-AEB may not:

- detect a crossing or oncoming vehicle on winding or hilly roads.
- detect all vehicles, especially vehicles with a trailer, tractors, muddy vehicles, etc.
- detect a vehicle when weather limits visibility, such as in fog, rain, or snow.
- detect a vehicle ahead if it is partially blocked by pedestrians or other objects.

Complete attention is always required while driving, and you should be ready to take action and apply the brakes and/or steer the vehicle to avoid crashes.

If equipped, the Intersection Automatic Emergency Braking system may help avoid or reduce the harm caused by front-end crashes with crossing vehicles.

The system works when driving in a forward gear above 15 km/h (9 mph) and less than 80 km/h (50 mph). It can detect oncoming vehicles up to approximately 60 m (197 ft).

Vehicle Crossing the Path Ahead

When there is a crossing vehicle detected approaching from the right or the left side that may lead to a collision, Intersection Automatic Emergency Braking provides a red flashing alert on the windshield and rapid audible alerts or pulses the Safety Alert Seat. See *Advanced Driver Assistance Systems* ⇨ *254*. Intersection Automatic Emergency Braking can provide a boost to braking or automatically brake the vehicle.

NOT FOR RESALE

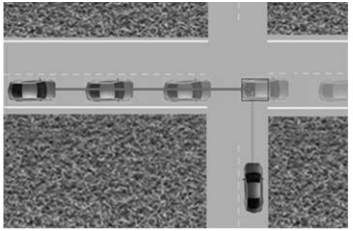

Intersection Automatic Emergency Braking can be set to Off, Alert, or Alert and Brake. To view available settings from the infotainment screen, touch Settings > Vehicle > Collision/ Detection Systems.

Crossing Traffic Alert

When your vehicle approaches an intersecting vehicle too rapidly and there is risk of a collision, a red warning graphic will flash on the windshield. Also, eight rapid high-pitched audible alerts will sound, or the driver seat will pulse five times. The side of the seat that is pulsed and the location of the audible alerts will depend on the direction that the intersecting vehicle is detected from. When this collision alert occurs, the brake system may prepare for driver braking to occur more rapidly which can cause a brief, mild deceleration. Continue to apply the brake pedal as needed.



With Head-Up Display

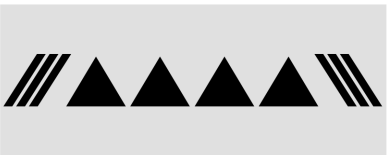

Without Head-Up Display

Turning Across Oncoming Traffic Alert

When your vehicle approaches another detected vehicle too rapidly, a red graphic will flash on the windshield. Also, eight rapid high-pitched audible alerts will sound from the front, or both sides of the Safety Alert Seat will pulse five times. When this Collision Alert occurs, the brake system may prepare for driver braking to occur more rapidly which can cause a brief, mild deceleration. Continue to apply the brake pedal as needed.



With Head-Up Display

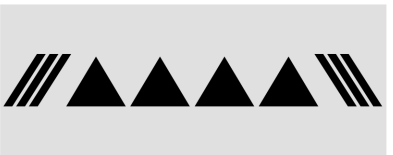

Without Head-Up Display

Automatic Braking

Warning

I-AEB may automatically brake or increase vehicle braking in situations when it may not be necessary or desired. Your vehicle could block the flow of traffic. I-AEB may respond to stationary or parked vehicles, signs, and other non-moving objects. To override AEB, firmly press the accelerator pedal, if it is safe to do so.

NOT FOR RESALE

⚠ Warning

Using I-AEB while towing a trailer could cause you to lose control of the vehicle and crash. Turn the system to Alert or Off when towing a trailer.

If Intersection Automatic Emergency Braking detects it is about to crash into an intersecting vehicle, and the brakes have not been applied, it may automatically brake moderately or hard. This can help to avoid some crashes or lessen impact by reducing the speed of the vehicle. Always wear a seat belt, and check that all passengers are properly restrained. Intersection Automatic Emergency Braking can automatically brake between 15 km/h (9 mph) and 80 km/h (50 mph). Automatic braking levels may be reduced under certain conditions, such as higher speeds.

Intersection Automatic Emergency Braking may slow the vehicle to a complete stop to try to avoid a potential crash. If this happens, it may engage the electric parking brake to hold the vehicle at a stop. Release the electric parking brake or firmly press the accelerator pedal to continue driving.

Intersection Automatic Emergency Braking may also apply the brakes automatically when there is an intersecting vehicle at risk of collision and the system determines that the driver is not braking with sufficient force.

Minor brake pedal pulsations or pedal movement during this time is normal and the brake pedal should continue to be applied as needed.

Cleaning the System

If Intersection Automatic Emergency Braking does not seem to operate properly, cleaning the outside of the windshield in front of the rearview mirror may correct the issue.

Front Pedestrian Braking (FPB) System

⚠ Warning

FPB does not provide an alert or automatically brake the vehicle, unless it detects a pedestrian or bicyclist. FPB may not detect pedestrians, including children, or bicyclists:

(Continued)

Warning (Continued)

- When the pedestrian or bicyclist is not directly ahead, fully visible, or standing upright, or when part of a group.
- Due to poor visibility, including nighttime conditions, fog, rain, or snow.
- If the FPB sensor is blocked by dirt, snow, or ice.
- If the headlights or windshield are not cleaned or in proper condition.

Be ready to take action and apply the brakes. For more information, see *Defensive Driving* ⇨ *179*. Keep the windshield, headlights, and FPB sensor clean and in good repair.

If equipped, the Front Pedestrian Braking system may help avoid or reduce the harm caused by front-end crashes with pedestrians and bicyclists when driving in a forward gear. Front Pedestrian Braking displays an amber indicator, 🚶, when a nearby pedestrian or bicyclist is detected ahead. When approaching a detected pedestrian or bicyclist too quickly, the system provides a red flashing alert on the

NOT FOR RESALE

windshield and rapid audible alerts or pulses the driver seat. Front Pedestrian Braking can provide a boost to braking or automatically brake the vehicle. This system includes Intelligent Brake Assist and the Automatic Emergency Braking system may also respond to pedestrians or bicyclists. See *Automatic Emergency Braking (AEB)* ⇨ *267*. Always wear a seat belt and ensure that all passengers are properly restrained.

The Front Pedestrian Braking system can detect and alert to pedestrians or bicyclists in a forward gear at speeds between 8 km/h (5 mph) and 80 km/h (50 mph). During daytime driving, the system detects pedestrians or bicyclists up to a distance of approximately 40 m (131 ft). During nighttime driving, system performance is very limited.

Front Pedestrian Braking can be set to Off, Alert, or Alert and Brake through vehicle settings. To view available settings from the infotainment screen, touch Settings > Vehicle > Collision/ Detection Systems.

Detecting the Pedestrian or Bicyclist Ahead



Front Pedestrian Braking alerts and automatic braking will not occur unless the system detects a pedestrian or bicyclist. When a nearby pedestrian or bicyclist is detected in front of the vehicle, the pedestrian ahead indicator will display amber.

Front Pedestrian Alert



With Head-Up Display

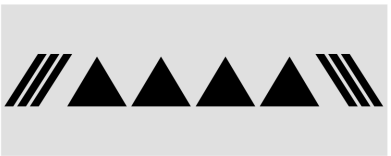

Without Head-Up Display

When the vehicle approaches a pedestrian or bicyclist ahead too rapidly, the red Front Pedestrian Braking alert display will flash on the windshield. Eight rapid high-pitched audible alerts will sound from the front, or both sides of the Safety Alert Seat will pulse five times. When this Pedestrian Alert occurs, the brake system may prepare for driver braking to occur more rapidly which can cause a brief, mild deceleration. Continue to apply the brake pedal as needed. Cruise control may be disengaged when the Front Pedestrian Alert occurs.

NOT FOR RESALE

Automatic Braking

⚠ Warning

FPB may alert or automatically brake the vehicle suddenly in situations where it is unexpected and undesired. It could falsely alert or brake for objects similar in shape or size to pedestrians or bicyclists, including shadows. This is normal operation and the vehicle does not need service. To override Automatic Braking, firmly press the accelerator pedal, if it is safe to do so.

⚠ Warning

Using the Front Pedestrian Braking system while towing a trailer could cause you to lose control of the vehicle and crash. Turn the system to Alert or Off when towing a trailer.

Automatic Braking can be disabled through vehicle settings. To view available settings from the infotainment screen, touch Settings > Vehicle > Collision/Detection Systems.

If Front Pedestrian Braking detects it is about to crash into a pedestrian or bicyclist directly ahead, and the brakes have not been applied, it may automatically brake moderately or brake hard. This can help to avoid some very low speed pedestrian and bicyclist crashes or reduce pedestrian injury. Front Pedestrian Braking can automatically brake to detected pedestrians or bicyclists between 8 km/h (5 mph) and 80 km/h (50 mph). Automatic braking levels may be reduced under certain conditions, such as higher speeds.

Front Pedestrian Braking may slow the vehicle to a complete stop to try and avoid a potential collision with a pedestrian or bicyclist. If this happens, automatic braking may engage the electric parking brake to hold the vehicle at a stop. Firmly press the accelerator pedal to release automatic braking and the electric parking brake.

Cleaning the System

If Front Pedestrian Braking does not seem to operate properly, cleaning the outside of the windshield in front of the rearview mirror may correct the issue.

Lane Change Alert (LCA)

⚠ Warning

LCA does not alert the driver to vehicles outside of the system detection zones, pedestrians, bicyclists, or animals. It may not provide alerts when changing lanes under all driving conditions. Failure to use proper care when changing lanes may result in injury, death, or vehicle damage. Before making a lane change, always check mirrors, glance over your shoulder, and use the turn signals.

If equipped, the Lane Change Alert system is a lane-changing aid that assists drivers with avoiding lane change crashes that occur with moving vehicles in the side blind zone (or spot) areas or with vehicles rapidly approaching these areas from behind. The Lane Change Alert warning display will light up in the corresponding outside mirror and will flash if the turn signal is on.

Side Blind Zone Alert is included as part of the Lane Change Alert system.

NOT FOR RESALE

Lane Change Alert Detection Zones

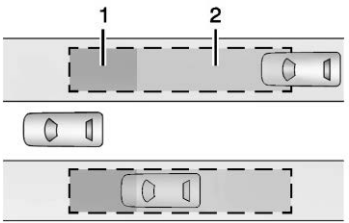

1. Side Blind Zone Alert Detection Zone
2. Lane Change Alert Detection Zone

The Lane Change Alert sensor covers a zone of approximately one lane over from both sides of the vehicle, or 3.5 m (11 ft). The height of the zone is approximately 0.5 m (1.5 ft) and 2 m (6 ft) off the ground. The Side Blind Zone Alert warning area starts at approximately the middle of the vehicle and goes back 5 m (16 ft). Drivers are also warned of vehicles rapidly approaching from up to 70 m (230 ft) behind the vehicle.

How the System Works

The Lane Change Alert symbol lights up in the side mirrors when the system detects a moving vehicle in the next lane over that is in the side blind zone or rapidly approaching that zone from behind. A lit Lane Change Alert symbol indicates it may be unsafe to change lanes. Before making a lane change, check the Lane Change Alert display, check mirrors, glance over your shoulder, and use the turn signals.



Left Side Mirror Display



Right Side Mirror Display

When the vehicle is started, both outside mirror Lane Change Alert displays will briefly come on to indicate the system is operating. When the vehicle is in a forward gear, the left or right side mirror display will light up if a moving vehicle is detected in the next lane over in that blind zone or rapidly approaching that zone. If the turn signal is activated in the same direction as a detected vehicle, this display will flash as an extra warning not to change lanes.

Lane Change Alert can be disabled through vehicle personalization. To view available settings from the infotainment app screen, select Settings > Vehicle > Collision/Detection Systems. If Lane Change Alert is disabled by the driver, the mirror displays will not light up.

When the System Does Not Seem to Work Properly

The Lane Change Alert system requires some driving for the system to calibrate to maximum performance. This calibration may occur more quickly if the vehicle is driven on a straight highway road with traffic and roadside objects (e.g., guardrails, barriers). During a trip, the Lane Change Alert system is not operational until the vehicle first reaches a speed of 24 km/h (15 mph).

Lane Change Alert displays may not come on when passing a vehicle quickly or for a stopped vehicle. The system may alert to objects attached to the vehicle, such as a bicycle, or object extending out to either side of the vehicle. Attached objects may also interfere with the detection of vehicles. This is normal system operation; the vehicle does not need service.

Lane Change Alert may not always alert the driver to vehicles in the next lane over, especially in wet conditions or when driving on sharp curves. The system does not need

NOT FOR RESALE

to be serviced. The system may light up due to guardrails, signs, trees, shrubs, and other non-moving objects. This is normal system operation; the vehicle does not need service.

Lane Change Alert may not operate when the sensors in the left or right corners of the rear bumper are covered with mud, dirt, snow, ice, or slush, or in heavy rainstorms. For cleaning instructions, see "Washing the Vehicle" under *Exterior Care* ⇨ *364*. If the Driver Information Center still displays the system unavailable message after cleaning both sides of the vehicle toward the rear corners of the vehicle, see your dealer.

If the Lane Change Alert displays do not light up when moving vehicles are in the side blind zone or rapidly approaching this zone and the system is clean, the system may need service. Take the vehicle to your dealer.

Driving with a Trailer

The Lane Change Alert detection zones that extend back from the side of the vehicle do not move further back when a trailer is towed.

Use caution while changing lanes when towing a trailer.

Side Bicycle Detection

If equipped, the system may detect a bicyclist approaching from the side or rear of the vehicle.

If this occurs, an audible alert will sound in the direction of the detection, and the Safety Alert Seat will pulse if enabled through vehicle settings. To view available settings from the infotainment app screen, select Settings > Vehicle > Collision/Detection Systems.

Bicyclist Detection is available when the vehicle is in D (Drive), P (Park), and for a short time after the vehicle is turned off.

If the vehicle detects a bicyclist when it is off, a Driver Information Center message may display and alert to the direction of the detection. In some cases, an Unavailable message may display. This is normal and does not mean that the system is broken.

Detection Zones

When the vehicle is in P (Park) or is turned off, a bicyclist can be detected 11 m (36 ft) behind the vehicle or 10 m (33 ft) to the side of the vehicle.

When the vehicle is in D (Drive), a bicyclist can be detected 3 m (10 ft) behind the vehicle or to the side of the vehicle.

Turning the Feature On or Off

Bicyclist Detection can be turned on or off through vehicle settings. To view available settings from the infotainment app screen, select Settings > Vehicle > Collision/Detection Systems.

Blind Zone Steering Assist (BZSA)

⚠ Warning

Do not rely on Blind Zone Steering Assist (BZSA) to prevent crashes. This system does not replace the need to pay attention and drive safely. Failure to use proper care when driving may result in vehicle damage, injury, or death.

- BZSA performance may be affected by weather and road conditions.
- BZSA does not provide steering assistance to avoid a vehicle that is in, or has entered, your lane of travel.
- BZSA will not prevent a towed trailer from crossing into the adjacent lane. Always monitor the trailer position

(Continued)

NOT FOR RESALE

Warning (Continued)

while towing to ensure it is in the same lane as your vehicle. BZSA is only designed to detect when your vehicle unintentionally crosses detected lane lines.

If equipped, the Blind Zone Steering Assist system can detect a potential crash with a moving vehicle in the lane you are entering. It provides a brief, urgent turn of the steering wheel to alert you to take action to avoid a collision.

Blind Zone Steering Assist works with Lane Keep Assist and Lane Change Alert. It operates when the vehicle is in a forward gear, and only when Lane Keep Assist and Lane Change Alert are enabled and able to assist. See *Lane Keep Assist (LKA)* ⇨ *279*. See *Lane Change Alert (LCA)* ⇨ *273*.

Blind Zone Steering Assist will provide a steering correction when your vehicle is about to leave the current lane of travel, with the possibility of a collision with a vehicle in the adjacent lane. This steering correction happens closer to the center of the lane and has a stronger steering correction than Lane Keep Assist. Unlike Lane Keep Assist, the steering correction with Blind Zone Steering Assist will happen even if your turn signal is on in the direction of lane departure.

In addition to the Blind Zone Steering Assist steering intervention, the  will turn amber, six audible alerts or six seat pulses will occur, if equipped with Safety Alert Seat, and  or will flash on the outside rear view mirror.

Traffic Sign Assistant

Caution

The system is intended to assist the driver within a defined speed range to discern certain traffic signs. Always pay attention to posted speed limit signs.

Do not ignore traffic signs which are not displayed by the system.

The system does not discern any signs other than the conventional traffic signs that might give or end a speed limit. It may not detect some electronic speed signs.

(Continued)

Caution (Continued)

Depending on the weather conditions or problems with traffic signs, a traffic sign may not be recognized or a sign different from the actual traffic sign may be displayed.

Do not let this special feature tempt you into taking risks when driving.

Always adapt vehicle speed to the road conditions.

Driver assistance systems do not relieve the driver from full responsibility for vehicle operation.

If equipped, Traffic Sign Assistant recognizes designated traffic signs via the front camera located behind the windshield in front of the interior rear view mirror, and displays the detected speed limit in the Driver Information Center. Additionally, speed limit information from the navigation system map database may be used.

Traffic signs that are detected are:

- Speed Limit
- Conditional Signs

NOT FOR RESALE

Display Indication

The currently detected speed limit is displayed in the Driver Information Center and remains displayed until a new speed limit is detected, or an end of speed limit indication is detected. Depending on the vehicle, the current valid speed limit is permanently displayed on the Driver Information Center or in the upper left of the instrument cluster.

A **(--)** symbol in a frame indicates that a speed limit is not available for this road segment.

A **(/)** symbol in a frame indicates that the feature is turned off or has failed.

See *Instrument Cluster* ⇨ *108*.

Alert Function

If equipped, an audible alert may sound and the displayed speed sign may flash when you have exceeded the indicated speed limit by a certain amount, or if a new speed limit is detected.

The alert function can be turned on or off. To view available settings from the infotainment screen, touch Settings > Vehicle > Speed Assist.

Each time the vehicle is started, the customization options may be enabled by default.

Navigation System Traffic Sign Detection

The currently displayed sign can either originate from sign detection using the camera, or from the navigation system map data. If the currently displayed sign originates from map data and the map information changes, a new sign will be displayed. This may lead to detection of a new sign although no sign on the road may have been passed. If the map data is unavailable, Traffic Sign Assistant will turn off automatically.

Limitations

Traffic sign memory may not operate correctly if:

- The area of the windshield, where the front camera is located, is not clean or is affected by foreign objects, e.g. stickers, window tinting, etc.
- Traffic signs are completely or partially covered, are too low or high or difficult to discern.
- Traffic signs are incorrectly mounted or are damaged.
- Traffic signs do not comply with the approved traffic sign standards.
- The speed limit is displayed by certain types of electronic speed signs.
- There are adverse environmental conditions, e.g. heavy rain, snow, direct sunlight or shadows.
- The headlights are dirty or not correctly aligned when driving at night.
- The navigation map data is out of date.
- The navigation map is unavailable.
- The audio system is not functioning properly.

Driver Attention Assist

If equipped, Driver Attention Assist alerts the driver to pay closer attention to the road ahead. Driver Attention Assist uses a camera-based Driver Monitoring System. The Driver Monitoring System on the steering column continually monitors the driver's head movements and eye gaze location to determine if the driver is drowsy or distracted. Depending on the level of the driver's distraction or drowsiness, Driver Attention Assist will provide visual warnings, audible

NOT FOR RESALE

alerts, and Safety Alert Seat vibrations, if equipped, to gently guide the driver to refocus on the driving task.

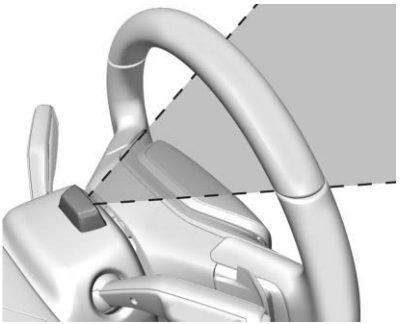

Sunglasses, hats, or other types of clothing that cover head or facial features may interfere with camera performance. To improve camera performance, raise or lower the steering wheel, wear lighter tinted glasses, or change the seat position.

Driver Attention Assist does not record video or audio. It is only active while driving with the feature enabled.

How to Activate Driver Attention Assist

The feature can be enabled or disabled through vehicle settings. To view available settings from the infotainment app screen, select Settings > Vehicle > Driver Attention Assist.

Distracted Driving

When the driver's attention is not on the road, Driver Attention Assist will send visual and audible alerts, or Safety Alert Seat vibrations.

If the driver does not return their attention to the road ahead and displays unresponsive behavior, the system will engage multiple Advanced Driver Assistance Systems, bring the vehicle to a stop, and call OnStar Emergency to get aid to the driver as soon as possible. See *Lane Keep Assist (LKA)* ⇨ *279* and *Automatic Emergency Braking (AEB)* ⇨ *267*.

Drowsy Driving

The system monitors the driver for signs of fatigue, such as yawning, slower blinking frequency, or gaze fixation. Driver Attention Assist provides visual and audible alerts, or Safety Alert Seat vibrations. When the system detects that the driver is greatly struggling to stay awake, the alerts will be more intense and frequent. While a driver is detected to be only be drowsy, Driver Attention Assist may activate or adjust settings for Advanced Driver Assistance Systems, even if they have been disabled, only for the duration that the drowsiness is detected. The activated features will revert to their previous selections once the driver is no longer detected to be showing signs of fatigue.

When the maximum drowsiness alert occurs, the driver will be presented with the following options on the infotainment screen:

- Phone a Friend
- Start a Playlist
- Navigate to Nearest Point of Interest

Select an option from the list and follow the instructions displayed on infotainment screen.

If the driver's eyes are closed, and they are detected to be asleep, the system will engage multiple Advanced Driver Assistance Systems, bring the vehicle to a stop, and call OnStar Emergency to get aid to the driver as soon as possible.

See *Lane Keep Assist (LKA)* ⇨ *279* and *Automatic Emergency Braking (AEB)* ⇨ *267*.

NOT FOR RESALE

Cleaning the Camera

The camera lens cover on the steering column may become dirty over time. If this occurs, clean the lens cover with a soft cloth sprayed with glass cleaner. Wipe the lens gently, then dry it. Never use abrasive cloths, cleaners, or corrosive chemicals of any kind on the lens cover.

Limitations

Some factors can impact the performance of the Driver Attention Assist feature, causing it to not to function as intended. These include (but are not limited to):

- Damage to the Driver Monitoring System, camera, or lens.
- The camera being blocked by the steering wheel, hands, or objects.

If there is a problem with the system, a Driver Information Center message or icon in the instrument cluster may display.

Lane Keep Assist (LKA)

⚠ Warning

The LKA system does not continuously steer the vehicle. It may not keep the vehicle in the lane or give a Lane Departure Warning (LDW) alert, even if a lane marking is detected.

The LKA and LDW systems may not:

- Provide an alert or enough steering assist to avoid a lane departure or crash.
- Detect lane markings under poor weather or visibility conditions. This can occur if the windshield or headlights are blocked by dirt, snow, or ice, if they are not in proper condition, or if the sun shines directly into the camera.
- Detect road edges.
- Detect lanes on winding or hilly roads.

If LKA only detects lane markings on one side of the road, it will only assist or provide an LDW alert when approaching the lane on the side where it has detected

(Continued)

Warning (Continued)

a lane marking. Even with LKA and LDW, you must steer the vehicle. Always keep your attention on the road and maintain proper vehicle position within the lane, or vehicle damage, injury, or death could occur. Always keep the windshield, headlights, and camera sensors clean and in good repair. Do not use LKA in bad weather conditions.

⚠ Warning

Using Lane Keep Assist while towing a trailer or on slippery roads could cause loss of control of the vehicle and a crash. Turn the system off.

If equipped, Lane Keep Assist may help avoid crashes due to unintentional lane departures. This system uses a camera to detect lane markings. The Lane Keep Assist system can be ready to assist above approximately 50 km/h (31 mph). The system may assist by gently turning the steering wheel if the vehicle approaches a detected lane marking. It may also provide a Lane Departure Warning alert if

NOT FOR RESALE

the vehicle unintentionally crosses a detected lane marking. Lane Keep Assist will not assist or alert if the turn signal is active in the direction of the lane departure, or if it detects that you are accelerating, braking, or actively steering. Lane Keep Assist can be overridden by turning the steering wheel. If the system detects you are steering intentionally across a lane marker, the Lane Departure Warning may not be given. Do not expect the warning to occur when you are intentionally crossing a lane marker.

How the System Works

The Lane Keep Assist camera sensor is on the windshield ahead of the rearview mirror.

To turn Lane Keep Assist on and off, press  on the instrument panel to the left of the steering wheel.

Lane Keep Assist may not be available in extremely cold temperatures of less than approximately −30° F(−34° C).

When on, is white and changes green if Lane Keep Assist is available to assist and provide Lane Departure Warning alerts. It may assist by gently turning the steering wheel and display as amber if the vehicle approaches a detected lane marking without using a turn signal in that direction. It may also provide an Lane Departure Warning alert by flashing amber as the lane marking is crossed. Additionally, there may be three audible alerts on the right or left, depending on the lane departure direction.

Take Steering

The Lane Keep Assist system does not continuously steer the vehicle. If the system does not detect active driver steering, an audible alert or Driver Information Center message may be provided. Move the steering wheel to dismiss.

When the System Does Not Seem to Work Properly

The system performance may be affected by:

- Close vehicles ahead.
- Sudden lighting changes, such as when driving through tunnels.
- Banked roads.
- Roads with poor lane markings, such as two-lane roads.

If the Lane Keep Assist system is not functioning properly when lane markings are clearly visible, cleaning the windshield may help.

A system unavailable message may display if the camera is blocked. The Lane Keep Assist system does not need service.

Lane Keep Assist assistance and/or Lane Departure Warning alerts may occur due to tar marks, shadows, cracks in the road, temporary or construction lane markings, or other road imperfections. This is normal system operation; the vehicle does not need service. Turn Lane Keep Assist off if these conditions continue.

Surround Vision Recorder

If equipped, Surround Vision Recorder may record video of the vehicle surroundings continuously, up to two hours, while automatically overwriting the oldest videos to continue recording.

When the feature is enabled, the recordings are saved on a USB device with the specifications of:

- 64GB storage capacity, with at least 32GB of storage available.

NOT FOR RESALE

- A FAT32 file system. MS-DOS (FAT) should be used for Mac.
- USB type C or A.
- USB3.0 or greater.

It is recommended to use a single USB device specifically for Surround Vision Recorder.

Event recording features may be offered after a future software update to your vehicle. When available, you will learn about the new features through the application.

Security Recording

If Security Recording is enabled, the cameras automatically record the vehicle's exterior and interior when the theft alarm is triggered. This recording will be a video of a short time after the alarm becomes activated.

Configuring the System

To access settings, and the recordings playlist, select Recordings on the infotainment app screen.

Always review the settings carefully before use.

Limitations

Certain features may not be available at all locations and under all vehicle conditions, such as when the 12V battery is too low. No sound is included in the video footage.

Features are subject to change. Some features may be enabled with an additional subscription service. You will be informed which features apply after the software update.

When using Surround Vision Recorder, follow all local laws and regulations in your jurisdiction.

Both rear and side perspectives are captured. Due to the angle and placement of the cameras, some recording may show a small black area due to the wide field of view.

Untrusted Media Devices

Do not use untrusted mobile or media devices. They may negatively impact system operation and performance.

Charging

When to Charge

When the high voltage battery is low, an amber warning light may appear and the following charging messages may display on the Driver Information Center:

CHARGE VEHICLE SOON : Charge the battery as soon as possible.

REDUCED ACCELERATION DRIVE WITH CARE : There is reduced accelerator pedal response and the remaining range value changes to LOW. Charge the vehicle immediately. See *Propulsion Power Messages* ⇨ *133*.

OUT OF ENERGY, CHARGE VEHICLE NOW : The battery charge is fully depleted. The vehicle will slow to a stop. Brake and steering assist will continue operating. Once stopped, turn the vehicle off.

NOT FOR RESALE

Plug-In Charging

Caution

To avoid damage to the vehicle, make sure the charging cord plug is in good condition, is not worn or damaged, and is connected securely to the vehicle's charging port. If vehicle charging is intermittent, disconnect the cord and inspect for damage. An excessively worn or damaged AC or DC charging cord plug may result in an intermittent connection and potential damage to the vehicle's charging port.

Plug-in charge times vary based on the battery condition, charge level, outside temperature, and charge station capability. See *Charging* ⇨ *122* for charge mode selection.

Do not allow the vehicle to remain in temperature extremes for long periods without being driven or plugged in. When temperatures are below 0 °C (32 °F) and above 32 °C (90 °F), plug in the vehicle to maximize high voltage battery life.

In extreme temperature conditions, a full charge will take additional time.

Charging slows down as the battery recharges. Charge the battery to 80% for daily driving, or when driving in mountainous terrain. The vehicle can be charged above 80% for long trips when not driving in mountainous terrain.

GM recommends the following:

- Unless your drive requires a full charge, charge the high voltage battery to 80% or less.
- Avoid allowing the high voltage battery to fall below 20% charged, if possible. See *Battery - North America* ⇨ *311*.
- If your route includes steep mountain terrain or if you are towing a trailer, it is important that your battery charge level is 80% or less to maximize regenerative braking performance.

It is normal to hear fans, pumps, and electrical devices clicking while the vehicle is turned off and charging.

The vehicle does not require indoor charging area ventilation before, during, or after charging.

Do not drive the vehicle while the charge cord is plugged in.

⚠ Warning

Use of unapproved charge cord adapters may cause electrical overheating, resulting in vehicle damage or personal injury. Only use GM-approved adapters with the charge cord. If you use an adapter which is not sold, provided, or approved by GM and it causes damage to your vehicle, the repair will not be covered by the vehicle warranty.

To charge your vehicle, it may be necessary to use a special adapter to match the format of the charger. The adapter is a device that connects the charger to the vehicle. Use an adaptor when the connectors are different, for example, when the charger is a Combined Charging System (CCS) and the EV has the North American Charging Standard (NACS) inlet.

Charging Override

A CHARGING OVERRIDE/INTERRUPTION OCCURRED message may display to indicate that a charging override or interruption has occurred due to one or more of the following events:

- Override of the charge settings by the owner

NOT FOR RESALE

- Unintended interruption of AC power at the vehicle's charge port
- Interruption of charging by the utility company

AC Charging

For safety information, see *Plug-In Charging* ⇨ *282*.

⚠ Warning

Do not use the charging station if the handle has defects such as cracks, exposed wires, burnt or missing pins, or any other damage. A damaged handle may result in personal injury and/or damage to the vehicle, the charging port or other property.

AC charging is slower than DC charging and ideal for everyday and overnight charging.

If AC power is lost for over one minute, an audible alert, if equipped, may sound briefly. To turn this audible alert off, see *Charging* ⇨ *122*.



AC Charge Cord Vehicle Plug

To Start AC Charging

1. Put the vehicle in P (Park).



2. Push and release the rearward edge of the charge port door to open it.

   In cold weather conditions, ice may form around the charge port door. Remove ice from the area before attempting to open or close the charge port door by sliding a thin plastic card in the small gap around the charge port door's edge.

   If ice buildup is too thick to break with a plastic card, lightly push the door at several points around the door's edge to crack the obstruction.
3. Plug the charge cord into the electrical outlet. To verify the charge cord status, see *Electrical Requirements for Battery Charging* ⇨ *298* and *Installing and Operating the Charge Cord* ⇨ *293*. For instructions to set cord limit settings for a charge session, see *Charging* ⇨ *122*.
4. Plug the charge cord into the vehicle charge port. Make sure the vehicle plug is fully connected to the charge port. If it is not properly connected, the vehicle may not charge. Check the Driver Information Center to make sure the vehicle plug is connected properly.
5. Follow the steps on the charging station to start the charge. If no instructions are present, the charge may need to be

NOT FOR RESALE

started via the mobile application or on the infotainment charging screen. See *Charging* ⇨ *122*. When charging is active, the vehicle plug is locked to the charge port and cannot be disconnected.

6. Verify that the headlight Charging Status Indicator illuminates on the headlights, if enabled, the charge port light turns on, and an audible alert sounds. See *Charging Status Feedback* ⇨ *287*.

To End AC Charging

When the vehicle is fully charged, charging automatically stops.

To Manually End AC Charging at Any Time

- Use the controls on the charging station.
- On the infotainment screen inside the vehicle, press the Stop Charge button on the Charging screen. See "Active Charging" under *Charging* ⇨ *122*.

To Remove the Charge Cord

1. Press the button on the top of the charge cord plug to unlock it. Unplug the charge cord from the vehicle.
2. Press the center of the charge port door firmly until it latches.
3. Unplug the charge cord from the electrical outlet.
4. Place the charge cord into the storage compartment.

If the vehicle plug is stuck or does not release normally, see "Emergency Manual Charge Cord Release" under *DC Charging* ⇨ *284*.

DC Charging

For safety information, see *Plug-In Charging* ⇨ *282*.

DC Charging Station Hardware

⚠ Warning

Do not use the charging station if the handle has defects such as cracks, exposed wires, burnt or missing pins, or any other damage. A damaged handle may result in personal injury and/or damage to the vehicle, the charging port or other property.

DC charging is quicker than AC charging. DC charging equipment is typically at service stations and other public locations.



DC Charge Cord Vehicle Plug

Your vehicle is compatible with a North American Charging Standard (NACS) connector.

When charging at a DC charge station, the charging cable connected to the vehicle shall be less than 10 m (33 ft) in length to meet functionality and regulatory requirements.

For maximum charging performance, and to prevent charging interruptions or damage to the high voltage battery and vehicle:

- Once you have plugged in the charging handle, remove your hands from the handle to avoid a charging interruption.

NOT FOR RESALE

- Ensure the charge cord plug is fully seated in the charge inlet.

Before DC Charging

If equipped, Fast Charge Prep adjusts the battery to the optimal temperature for quicker DC charging. When you add a DC charge station to your route on Google Maps, the Fast Charge Prep feature will begin automatically. If you do not add a station to your route but plan to use a DC fast charger, on the infotainment home screen, select Charging > Charge Settings > Fast Charge Prep > Start approximately 30 minutes before you begin charging. See *Charging* ⇨ *122*.

To Start DC Charging

Caution
Do not attempt to disconnect the DC vehicle plug while charging is active. This action may damage the vehicle or charging station hardware.

1. Put the vehicle in P (Park).



2. Push and release the rearward edge of the charge port door to open it.

   In cold weather conditions, ice may form around the charge port door. Remove ice from the area before attempting to open or close the charge port door by sliding a thin plastic card in the small gap around the charge port door's edge.

   If ice buildup is too thick to break with a plastic card, lightly push the door at several points around the door's edge to crack the obstruction.
3. Follow the steps on the charging station to start the charge. If no instructions are present, the charge may need to be started via the mobile application or on the infotainment charging screen. See *Charging* ⇨ *122*. When charging is active, the vehicle plug is locked to the charge port and cannot be disconnected.
4. Follow the steps listed on the charging station to start charging. When charging is active, the vehicle plug is locked to the charge port and cannot be disconnected.
5. Verify that the headlight Charging Status Indicator illuminates on the headlights, if enabled, the charge status light turns on, and an audible alert sounds. See *Charging Status Feedback* ⇨ *287*.

If DC charging does not begin or is interrupted, check the DC charging station display for messages. Unplug the cord to restart the DC charging process.

To End DC Charging

When the vehicle is fully charged, charging automatically stops and the plug unlocks.

To Manually End DC Charging at Any Time

- Press the button on the DC vehicle plug.
- Use the controls on the charging station.

NOT FOR RESALE

- On the infotainment screen inside the vehicle, press the Stop Charge button on the Charging screen. See "Active Charging" under *Charging* ⇨ *122*.

If the vehicle plug does not unlock from the vehicle charge port after a charge, contact Roadside Assistance or use the Emergency Manual Release cable. See *Roadside Assistance Program* ⇨ *386* and "Emergency Manual Charge Cord Release" later in this section.

To Remove the Charge Cord

1. Unplug the vehicle plug from the charge port on the vehicle.
2. Press the center of the charge port door firmly until it latches.

Emergency Manual Charge Cord Release

⚠ Warning

The emergency manual charge cord release should only be used to release a vehicle charge plug that is stuck in the charge port. To avoid the risk of personal injury, death, or property damage, do not attempt

(Continued)

Warning (Continued)

to use the release, or additional tools, to forcibly insert a charge plug into the port. Use a different plug or see your dealer for service.

This vehicle is equipped with an Emergency Manual Release cable if the vehicle plug is stuck or does not release normally.

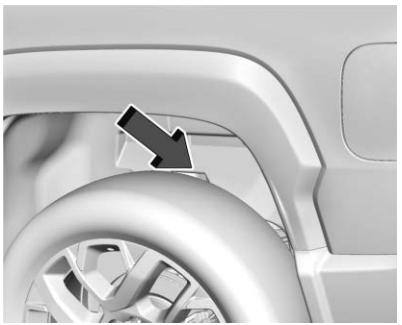

1. Reach around the tire to find the Emergency Manual Release cable.

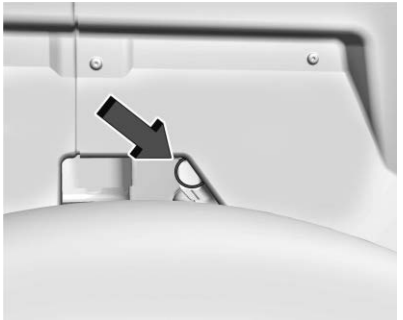

2. Pull the Emergency Manual Release cable handle. The lock pin in the charge cord will release.

Delayed Charging Override

To override a delayed charge event, unplug the charge cord from the charge port and then plug it back in within five seconds. A single audible alert will sound and charging will begin immediately.

To cancel an override, unplug the charge cord, wait for 10 seconds, and then plug the charge cord back in. A double audible alert will sound and delayed charging will resume.

NOT FOR RESALE

See *Charging* ⇨ *122* for advanced charge scheduling options.

Charging Status Feedback

This vehicle is equipped with a charge port light and a headlight Charge Status Indicator.



When the charge cord is plugged in, a color indicates the charging status.

The headlight Charge Status Indicator bar is located on the headlights. As charging occurs, the white light bars on the headlights fill towards the center of the vehicle.

NOT FOR RESALE

Refer to the table for charging status feedback:

Charge Port Light Color	Headlight Charge Status Indicator	Sound	Description
Solid Blue	None	None	Initial connection is successful.
Pulsing Blue	Single light bar flashing	Two audible alerts	Charging is delayed by charging screen or by a total utility interruption or override. Charging will begin later. See *Utility Interruption of Charging* ⇨ *298*.
Blinking Green (the longer the blink, the higher the state of charge)	Solid light bars represent the available state of charge. The remaining light bars build in a swipe pattern towards the center of the vehicle.	One audible alert	Vehicle is actively charging.
Solid Green	All light bars are solid	None	Charging is complete.
Pulsing Red	Off	None	Error or charging has not initialized at the charging station. Check the charge cord connection. There may be no power supplied to the vehicle. Follow the instructions at the charging station to initialize charging.

NOT FOR RESALE

Charge Port Light Color	Headlight Charge Status Indicator	Sound	Description
None (upon plug-in)	None	None	Check the charge cord connection.
None (after blue and green lights up)	None	None	Check the charge cord connection. If the connection is good, this may indicate a power failure or a total utility interruption, and charging will begin later. It may also occur if a high voltage charging system fault is detected. See *Utility Interruption of Charging* ⇨ *298* or *Service Vehicle Soon Light (Propulsion System Failure)* ⇨ *114*.
None	None	Three audible alerts when the driver door is opened	The charge port door is open.
Flashing Green (the longer the blink, the higher the state of charge)	None	Four audible alerts	The currently set departure time cannot be met. May be due to charging power level or charge schedule setting factors. Refer to the charging screen for actual charge completion time. See *Charging* ⇨ *122*.

NOT FOR RESALE

Charge Port Light Color	Headlight Charge Status Indicator	Sound	Description
Pulsing Green	None	One audible alert	The vehicle is actively discharging through the vehicle to vehicle cord.
None	None	Four audible alerts	When using Persistent Power, the vehicle is approaching the Range Reserve Limit or the Timer (if enabled) to end the session.

Charge Cord

INSTRUCTIONS PERTAINING TO A RISK OF FIRE OR ELECTRIC SHOCK

IMPORTANT SAFETY INSTRUCTIONS

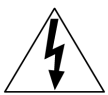

⚠ Danger

This symbol indicates risk of electrical shock.

If anything on the charge cord is broken, do not touch components with this symbol. To avoid injury, do not touch any metal on the charge cord as this could cause electrical current to flow to your body.

The vehicle may come with a portable charge cord for charging the high voltage battery. When used correctly, the charge cord provides a safe connection between a standard electrical outlet and your vehicle's on-board charger.

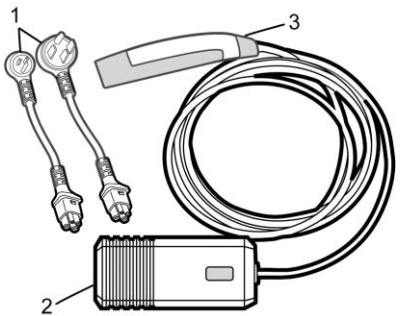

1. Low and High Power Swappable Connectors Based on Region
2. Charge Cord Control Box and Charge Cord Status Indicator

NOT FOR RESALE

3. Charge Cord Vehicle Plug

Read this section carefully before using the charge cord and save these instructions.

Important Information about Portable Electric Vehicle Charging

⚠ Warning

When using electric products, basic precautions should always be followed, including the following:

- Read all the safety warnings and instructions before using this product. Failure to follow the warnings and the instructions may result in electric shock, fire, and/or serious injury.
- Never leave children unattended near the vehicle while the vehicle is charging and never allow children to play with the charge cord.
- If the plug provided does not fit the electrical outlet, do not modify the plug. Arrange for a qualified electrician to inspect the electrical outlet.
- Do not put fingers into the electric vehicle connector.

⚠ Warning

Improper use of portable electric vehicle charge cords may cause a fire, electrical shock, or burns, and may result in damage to property, serious injury, or death.

- Do not use extension cords, multi-outlet power strips, splitters, grounding adapters, surge protectors, or similar devices.
- Do not use an electrical outlet that is worn or damaged, or will not hold the plug firmly in place.
- Do not use an electrical outlet that is not properly grounded.
- Do not use an electrical outlet that is on a circuit with other electrical loads.
- Do not wrap the charge cord around the housing of the control box.

⚠ Warning

- To reduce the risk of fire, installations shall comply with the requirements of National Electric Code, ANSI/NFPA 70 (USA), Canadian Electrical Code CSA 22.1 and IEC 60364 – Electrical installations in buildings, depending on the region in which the unit is being installed. The installer shall comply with any additional local requirements mandated by the country and/or municipality.
- Do not use this product if the flexible power cord or the electric vehicle cable is frayed, has broken insulation, or shows any other signs of damage.
- For Canada only: Not for use in commercial garages.
- Do not use this product if the enclosure or the vehicle plug is broken, cracked, open, or shows any other indication of damage.

(Continued)

NOT FOR RESALE

Warning (Continued)

- The plug must be plugged into an appropriate electrical outlet that is properly installed in accordance with all local codes and ordinances. Do not modify the plug provided with the product. If the plug does not fit the electrical outlet, have a proper electrical outlet installed by a qualified electrician. If ground is missing, the charge cord indicators will indicate an electrical system fault and the vehicle may not charge.

⚠ Warning

Connecting charging components incorrectly or to a damaged outlet can cause vehicle or property damage, personal injury, or death. When charging your vehicle, ensure all components are connected properly, there is no damage, and the outlet has power.

⚠ Warning

Disconnecting the charge cord from the grid outlet while charging can result in damage and/or injury. Do not disconnect while the vehicle is charging.

⚠ Warning

Water, moisture, and other foreign objects can pose a risk when using the charge cord. When charging outdoors, plug into an electrical outlet that is weatherproof and avoid situations where water can run along the charge cord to the vehicle inlet or the grid outlet. Do not place the control box and charge cord in a location where it may be submerged in water. Do not use the charge cord in severe weather conditions.

⚠ Warning

Check the electrical outlet/plug while charging and discontinue use if the electrical outlet/plug appears hot. Using

(Continued)

Warning (Continued)

a hot electrical outlet/plug could result in vehicle or property damage, personal injury, or death. Have the electrical outlet serviced by a qualified electrician.

⚠ Warning

Water, moisture, and other foreign objects can damage the portable charge cord. Damage to the charge cord could result in electrical malfunction, vehicle damage, electrical shock, or death. Protect the portable charge cord against water, moisture and foreign objects at all times.

Caution

Coiling or storing the charge cord in a location it may be crushed or forced into space to form a circle smaller than 178 mm (7 in) can damage the cord. Avoid restricting the charge cord rotation or applying excessive pulling force while wrapping.

NOT FOR RESALE

Caution

Using non-approved electrical sources to charge can cause damage to the charging system. Do not attempt to use the charge cord with non-utility supplied electrical power sources such as backup generating equipment.

Caution

Electrical outlets may wear out with normal usage or may be damaged over time making them unsuitable for electric vehicle charging. Regularly inspect outlets for wear and tear. Do not use if worn or damaged.

Before plugging the charge cord into any electrical outlet, have a qualified electrician inspect and verify the electrical system (electrical outlet, wiring, junctions, and protection devices) is suitable for a heavy-duty service.

Charge Cord Specifications

Voltage: 85–265 volts, AC single phase/split phase only

Frequency: 45–66 Hz

Enclosure: NEMA 4X

Current: Max 32 amps (Grid plug specific)

NEMA 5–15P Max Cordset: 12 amps

NEMA 14–50P Max Cordset: 32 amps

See *Installing and Operating the Charge Cord* ⇨ *293* and *Charge Cord Troubleshooting and Maintenance* ⇨ *297* for more information.

Installing and Operating the Charge Cord

For safety information, see *Charge Cord* ⇨ *290*.

Grounding Instructions

⚠ Warning

Improper connection of the charge cord ground may cause electrical shock. Check with a qualified electrician if there is doubt as to whether the charge circuit is properly grounded. Do not modify the plug provided with the product. If it will not fit the electrical outlet, have a proper electrical outlet installed by a qualified electrician.

The charge circuit must be grounded. If the charge circuit should malfunction or break down, grounding provides a path of least resistance for the electric current to reduce the risk of electric shock. Your charge cord has an equipment grounding conductor and a grounding plug. The plug must be plugged into an appropriate outlet that is properly installed and grounded in accordance with all local codes and ordinances.

The charge cord must be on a dedicated individual branch circuit. A dedicated circuit ensures that there is enough power available without overloading the system.

If you do not use a dedicated circuit, the circuit breaker could trip or open. If a dedicated circuit is not available, contact a qualified electrician.

Connecting the Charge Cord

The charge cord must operate at a temperature between -30 °C (-22 °F) and 50 °C (122 °F).

To connect the charge cord:

1. Snap the desired connectors into the control box before making any other connections.

NOT FOR RESALE



Align the pins and push firmly until you hear the connector snap into place. Ensure you cannot see any glossy black hard plastic. If the connector is not fully inserted into the control box the charge cord will not work properly.

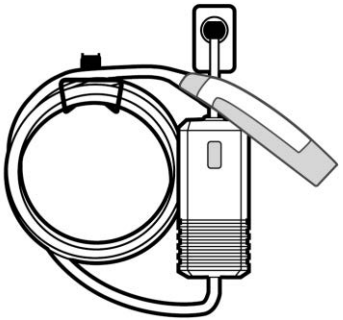

2. Mount the charge cord to reduce strain on the electrical outlet/plug. Mount the control box in a suitable location to prevent physical stress on the electrical outlets and charge cord components.

   Mount the control box directly to the wall or stud near a suitable electrical outlet. The retention eyelets on the control box are optimized for use with #10 drywall screws.

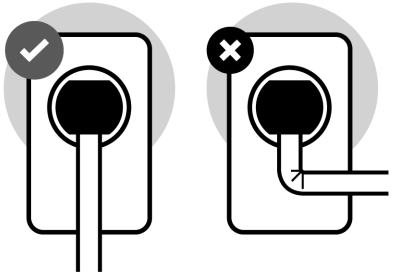

3. Handle electrical cables with care. Do not sharply bend, pull, or crush cables.
4. Connect the attachment plug to the electrical outlet. Refer to the “Charge Cord Status Indicator” section to ensure the charge cord is working properly.
5. Insert the vehicle plug into the vehicle charge port to initiate charging.
6. To disconnect the charge cord, press the release button on the vehicle plug to stop the charging session. Wait for the vehicle to release the plug. Once disconnected from the vehicle, the charge cord can be unplugged from the wall.

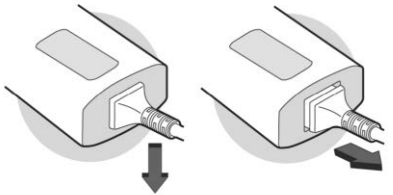

7. To remove the connector from the control box, pull down and out at the same time.

Charge Cord Status Indicator

The charge cord will perform a quick self-test after you plug it in.

Verify the charge cord status on the charge cord control box. The charge cord uses a combination of red and green indicators to display its status.

NOT FOR RESALE

If the charge cord status indicator is not lit, ensure the electrical outlet has power.

Green	Red	Reason	Action
–	–	The charge cord has no power.	Verify all components are connected properly, there is no damage, and the outlet has power. If the error continues, contact your dealer.
On	–	The charge cord is ready to use.	Plug the charge cord into the vehicle charge port to begin charging.
Blinking	–	The vehicle is actively charging.	No action needed.
Blinking	Blinking	An error has occurred and the charge cord is rebooting.	Wait for the charge cord to return to a solid green. If it reboots two or three more times, unplug the charge cord from the vehicle. If the error continues, contact your dealer.
–	Four blinks	An error has occurred or the connector type is invalid and the charge cord is rebooting.	Make sure the connector and the control box are fully connected or try another connector.
–	Three blinks	The control box temperature is out of the normal range.	Move the charge cord away from direct sunlight and/or hot surfaces such as asphalt paving, or wait until the charge cord has warmed up.
Blinking	Three blinks	The charge cord control box is overheating. Charging continues at a reduced rate.	If unplugging and plugging the charge cord back in to the vehicle does not work, move the charge cord away from direct sunlight and/or hot surfaces such as asphalt paving.
Blinking	One blink	AC plug or electrical outlet is overheating, charging continues at a reduced rate.	Disconnect from the electrical outlet. If the error persists, have a qualified electrician inspect and repair the issue.

NOT FOR RESALE

Green	Red	Reason	Action
–	One blink	The charger is troubleshooting after an error and requires a reboot.	– Verify all components are connected properly. Ensure the connectors are fully inserted into the control box. – Unplug and plug in the connector. – If the charge cord is in a warm environment, try charging in a cooler area. – Try a different outlet or connector, if available. If the error continues, contact your dealer.
–	Two blinks	There is a Ground Fault Circuit Interruption fault.	The charge cord will auto-restart after 15 minutes. Try a different connector, if available. If the error continues, contact your dealer.
–	On	There is a cordset internal fault.	Immediately disconnect from the electrical outlet and the vehicle. Contact your dealer for a replacement.
–	Blinking	The charge cord is rebooting.	Wait for the charge cord to return to a solid green. If the indicator changes to a different failure mode, refer to that line in this table and follow the corresponding action. If the failure mode is not listed, contact your dealer.

If faults persist, see *Charge Cord Troubleshooting and Maintenance* ⇨ *297*.

NOT FOR RESALE

Charge Cord Auto-Restart

Your charge cord set is equipped with the auto-restart feature. When charging your vehicle, if there is an error detected, the auto-restart feature works to eliminate the error and resume charging.

If a Ground Fault Circuit Interruption fault caused the error, the charger attempts to restart for a 15-minute interval. After the fourth attempt to restart, the charger shuts down and the red indicator stays on. Unplug and plug the charge cord back in to reset the charging. If this error continues, stop charging your vehicle. See your dealer for service.

Charge Level Selection

⚠ Warning

Using a vehicle charge level that exceeds the electrical circuit or electrical outlet capacity may start a fire or damage the electrical circuit. Use the lowest vehicle charge level until a qualified electrician inspects the electrical circuit capacity. Use the lowest vehicle charge level if the electrical circuit or electrical outlet capacity is not known.

To select the charge level, on the infotainment app screen, select the Charging app > Settings. For more information on charge level settings, see *Charging* ⇨ *122*.

Moving and Storage

Caution

When moving the charge cord equipment, use care to prevent damage to the equipment. Do not twist, pull, or drag the charge cord. Do not lift or carry the equipment by the charge cord only.

Keep the charge cord mounted and plugged into the electrical outlet for daily use. If you will not use the charge cord for a long period, unplug it and store in a clean, temperature-controlled location between -40 °C (-40 °F) and 85 °C (185 °F).

When storing the charge cord in the vehicle, secure the charge cord bag. Depending on the storage location, tether the charge cord bag to the vehicle.

Charge Cord Troubleshooting and Maintenance

For safety information, see *Charge Cord* ⇨ *290*.

Troubleshooting

⚠ Warning

If there are signs of melting or scorching, do not touch the charge cord or attachment plug. Have a qualified electrician inspect and repair the issue.

Confirm that the attachment plug is not too hot to grasp before disconnecting the charge cord from the vehicle.

If it is not hot, manually reboot the charge cord by unplugging and plugging the attachment plug back into the electrical outlet. If the same fault reoccurs, test the charge cord with a different electrical outlet.

The charge cord monitors temperature at several locations and may reduce charging power or interrupt charging if temperatures become too high. The charge cord status indicators illuminate and identify this fault. In hot climates, move the charge cord away

NOT FOR RESALE

from direct sunlight and/or hot surfaces such as asphalt pavement for approximately 30 minutes.

If there are no signs of damage, check how firm the fit of the plug is. If the plug easily pulls away from the electrical outlet, test the plug on a known good electrical outlet. If the fault condition returns, have your dealer inspect your charge cord. If the fault does not return, stop using the suspected circuit and have a qualified electrician inspect and repair the issue.

User Maintenance

The portable charge cord is not serviceable. Do not attempt to perform maintenance on the charge cord. See your dealer for replacement parts. Clean the charge cord and control box with a dry cloth and do not use any cleaning products.

Utility Interruption of Charging

Utility companies may limit or completely block electrical power grid use to balance electricity demand and supply. If limited, charging your vehicle will take longer. If blocked, charging will not resume until the interruption ends.

During a charging interruption:

- The instrument cluster displays a message indicating a utility interruption.
- Changing the charge mode to immediate charging or performing a delayed charging override will not resolve the interruption.
- Keep your vehicle plugged in so it automatically resumes charging once the interruption ends.

Managed Charging

If you are enrolled in a managed charging program, the myGMC/myOwner app may send a text message or notification with details about the utility interruption and how to opt-out, if applicable.

Charging Station Troubleshooting

If the vehicle does not begin charging after you plug it in to a residential 240-volt charging station:

1. Verify that the charge mode is not set to a delayed charging override.
2. Verify that the charging station circuit breaker is not tripped.
3. Plug the portable charge cord into the wall outlet, verify that the indicator light on the charge cord is solid green, and connect it to the vehicle. See “Charge Cord Status Indicator” in *Installing and Operating the Charge Cord* ⇨ *293*.
4. If the vehicle charges with the portable charge cord and a different 240-volt charging station, such as a public station, there may be a problem with the charging station. Contact the charging station manufacturer for service.

Electrical Requirements for Battery Charging

This vehicle is designed for compatibility with most standard vehicle charging equipment in the region of sale. Check for charger compatibility before purchasing a charger.

Innovation, Science, and Economic Development (ISED) Radiation Exposure Statement

This equipment complies with RSS-102 radiation exposure limits set forth for an uncontrolled environment. This equipment should be installed and operated with

NOT FOR RESALE

a minimum distance of 5.7 cm (2.2 in) between the radiator and any part of your body. The vehicle design ensures this distance is maintained during normal use. Changes or modifications to any of these systems by other than an authorized service facility could void authorization to use this equipment.

This Certification Information ensures compliance with Canada Innovation, Science, and Economic Development (ISED) regulations for the Integrated Power Electronics (IPE) module and OnBoard Charging Module 2 (OBCM2) (as equipped) that efficiently transfer energy to the vehicle battery to replenish driving range.

LG Magna

Delta Electronics Co., Ltd.

CAN ICES-001 (B) / NMB-001 (B)

See *Charge Cord* ⇨ *290*.

Trailer Towing

General Towing Information

⚠ Warning

You can lose control when towing a trailer if the correct equipment is not used or the vehicle is not driven properly. For example, if the trailer is too heavy or the trailer brakes are inadequate for the load, the vehicle may not stop as expected. You and others could be seriously injured. The vehicle may also be damaged, and the repairs would not be covered by the vehicle warranty. Pull a trailer only if all the steps in the Trailer Towing Supplement have been followed. Ask your dealer for advice and information about towing a trailer with the vehicle.

To find detailed preparation information, refer to the Trailer Towing Supplement online at:

For United States: www.gmc.com/support/vehicle/manuals-guides

For Canada: www.gmccanada.ca/en/support/vehicle/manuals-guides

For Mexico: www.gmc.com.mx/servicios-de-asistencia/manual-de-propietario

To tow a disabled vehicle, see *Transporting a Disabled Vehicle* ⇨ *363*.

To tow the vehicle behind another vehicle such as a motor home, see *Recreational Vehicle Towing* ⇨ *364*.

Conversions and Add-Ons

Add-On Electrical Equipment

⚠ Warning

The Data Link Connector (DLC) is used for vehicle service and Emission Inspection/Maintenance testing. See *Service Vehicle Soon Light (Propulsion System Failure)* ⇨ *114*. A device connected to the DLC — such as an aftermarket fleet or driver-behavior tracking device — may interfere with vehicle systems. This could affect vehicle operation and cause a crash. Such devices may also access information stored in the vehicle's systems.

NOT FOR RESALE

Caution
Some electrical equipment can damage the vehicle or cause components to not work and would not be covered by the vehicle warranty. Always check with your dealer before adding electrical equipment.

Add-on equipment can drain the vehicle's 12-volt battery, even if the vehicle is not operating.

When adding electrical equipment, it should only be connected using the accessory power outlets. The maximum power that can be supplied by one accessory power outlet or spread across all three is 200 watts or 15 amps. Exceeding 200 watts or 15 amps may cause erratic vehicle operation.

The vehicle has an airbag system. Before attempting to add anything electrical to the vehicle, see *Servicing the Airbag-Equipped Vehicle* ⇨ *66* and *Adding Equipment to the Airbag-Equipped Vehicle* ⇨ *67*.

Auxiliary Switches

On-screen auxiliary switches, if equipped, are quick-touch icons that appear within the infotainment system, giving you easy access to some of the features of certain aftermarket accessories installed on the vehicle (off-road lighting, light bars, etc.).

To access the on-screen auxiliary switches, select Controls > See More Controls > Aux Switches. Six on-screen auxiliary switches are available.

Use of the on-screen switches requires installation of an auxiliary switch interface module, which is mounted under the hood. See your dealer for purchase and installation of the necessary components. See *Accessories and Modifications* ⇨ *302*.

Customizing the On-Screen Auxiliary Switches

To customize an on-screen auxiliary switch:

1. With the vehicle on and in (P) Park, select Controls > Aux Switches on the infotainment home screen.
2. Select the arrow at the top right of the icon for the switch you want to customize, and then:
   - To create a new label, touch the name field and type in a new label. To save your update, touch ✓ (Done) on the keyboard.
   - To change the icon, touch a new one on the list.
   - Review the additional options listed below the name field. Touch the checkbox next to the option description to enable or disable the option.

     Turn on only while switch is held down: When this option is enabled, the switch will only operate while your finger continues to touch and hold the on-screen switch. This may be useful for accessories that only need to be turned on for short intervals.

     Turn on parking lights while switch is on: When this option is enabled, the vehicle parking lights will automatically turn on while the switch is in use. This may be particularly useful to use for a light bar, as it will help ensure your vehicle remains visible while driving in low-light conditions with the headlights off.
3. Select the BACK icon to save your customizations.

NOT FOR RESALE

Vehicle Care

General Information
General Information 302
California Perchlorate Materials Requirements 302
Accessories and Modifications 302

Vehicle Checks
Doing Your Own Service Work 302
Underhood Access Covers 304
Underhood Compartment Overview 305
Cooling System 307
Washer Fluid 309
Brakes 309
Brake Fluid 310
Battery - North America 311
Park Brake and P (Park) Mechanism Check 314
Wiper Blade Replacement 314
Glass Replacement 315
Windshield Replacement 315
Gas Strut(s) 315

Headlight Aiming
Front Headlight Aiming 316

Bulb Replacement
LED Lighting 316

Electrical System
High Voltage Devices and Wiring 316
Electrical System Overload 317
Fuses and Circuit Breakers 318
Underhood Compartment Fuse Block 319
Instrument Panel Fuse Block (Right) 323
Instrument Panel Fuse Block (Left) 325

Wheels and Tires
Tires 328
All-Season Tires 329
Winter Tires 329
All-Terrain Tires 330
Tire Sidewall Labeling 330
Tire Designations 331
Tire Terminology and Definitions 332
Tire Pressure 333
Tire Pressure for High-Speed Operation 334
Tire Pressure Monitor System 335
Tire Pressure Monitor Operation 335
Tire Inspection 339
Tire Rotation Monitor 339
Tire Rotation 340
When It Is Time for New Tires 341
Buying New Tires 341
Different Size Tires and Wheels 343
Uniform Tire Quality Grading 343
Wheel Alignment and Tire Balance 344
Wheel Replacement 344
Tire Chains and Other Traction Devices 345
If a Tire Goes Flat 346
Tire Sealant and Compressor Kit 347
Storing the Tire Sealant and Compressor Kit 353
Tire Changing 353
Full-Size Spare Tire 360

Jump Starting
Jump Starting - North America 360

Towing the Vehicle
Transporting a Disabled Vehicle 363
Recreational Vehicle Towing 364

Appearance Care
Exterior Care 364
Interior Care 370
Floor Mats 373

NOT FOR RESALE

General Information

For service and parts needs, visit your dealer. You will receive genuine GM parts and GM-trained and supported service people.

Genuine GM parts have one of these marks:





California Perchlorate Materials Requirements

Certain types of automotive applications, such as airbag initiators, seat belt pretensioners, and lithium batteries contained in electronic keys, may contain perchlorate materials. Perchlorate Material – special handling may apply. See www.dtsc.ca.gov/hazardouswaste/perchlorate.

Accessories and Modifications

Caution

When adding accessories or other equipment after the purchase of your vehicle, ensure you are not exceeding the vehicle axle weight ratings or overall weight ratings. Overloading the vehicle may cause damage. Repairs would not be covered by the vehicle warranty. Do not overload the vehicle. See *Vehicle Load Limits* ⇨ *191* and *General Towing Information* ⇨ *299* for those specific weight ratings.

Adding non-GM approved accessories or making modifications to the vehicle can affect vehicle performance and safety, including airbags, braking, stability, ride and handling, emissions systems, aerodynamics, durability, Advanced Driver Assistance Systems, and electronic systems like antilock brakes, traction control, and stability control. These accessories or modifications could cause malfunction or damage not covered by the vehicle warranty.

Damage to suspension components caused by modifying vehicle height outside of factory settings will not be covered by the vehicle warranty.

Damage to vehicle components resulting from modifications or the installation or use of non-GM certified parts, including control module or software modifications, is not covered under the terms of the vehicle warranty and may affect remaining warranty coverage for affected parts.

Also, see *Adding Equipment to the Airbag-Equipped Vehicle* ⇨ *67*.

Vehicle Checks

Doing Your Own Service Work

⚠ Warning

Never try to do your own service on high voltage battery components. You can be injured and the vehicle can be damaged if

(Continued)

NOT FOR RESALE

Warning (Continued)

you try to do your own service work. Service and repair of these high voltage battery components should only be performed by a trained dealer technician with the proper knowledge and tools.

Exposure to high voltage can cause shock, burns, and even death. The high voltage components in the vehicle can only be serviced by technicians with special training.

High voltage components are identified by labels. Do not remove, open, take apart, or modify these components. High voltage cable or wiring has orange covering. Do not probe, tamper with, cut, or modify high voltage cable or wiring.

⚠ Warning

Unexpected wheel motion and/or direction when one or more wheels are off the ground for service work may result in injury. The vehicle may:

(Continued)

Warning (Continued)

- Allow the wheels to rotate unexpectedly in either direction regardless of mode selection.
- Allow the wheels to rotate in reaction to attempts to rotate the tire(s) manually.
- Resist attempts to rotate the wheels manually.

Before lifting the vehicle to do your own service work, turn the vehicle off or place the vehicle in the Service Mode. To place the vehicle in Service Mode, see "Service Mode" under *Power Modes* ⇨ *196*.

⚠ Warning

It can be dangerous to work on your vehicle if you do not have the proper knowledge, service manual, tools, or parts. Always follow owner's manual procedures and consult the service manual for your vehicle before doing any service work.

The proper service manual provides more detail on vehicle service than this manual. To order the proper service manual, see *Publication Ordering Information* ⇨ *390*.

This vehicle has an airbag system. Before attempting to do your own service work, see *Servicing the Airbag-Equipped Vehicle* ⇨ *66*.

Keep a record with all parts receipts and list the mileage and the date of any service work performed. See *Maintenance Records* ⇨ *378*.

NOT FOR RESALE

Underhood Access Covers

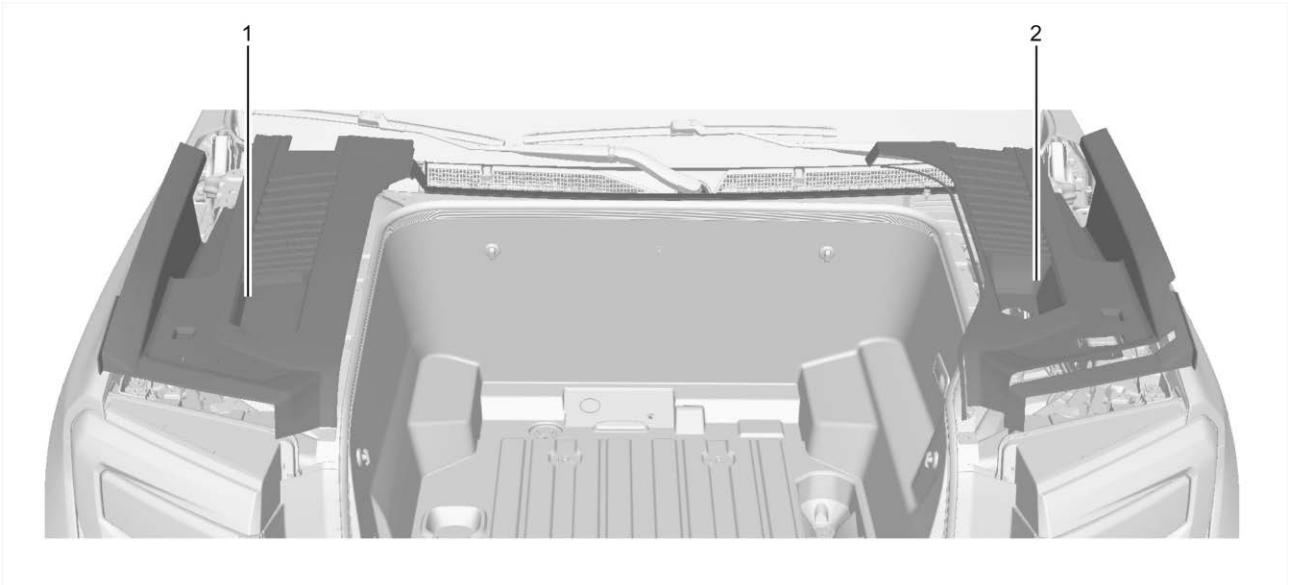

1. Left Hand Access Cover
2. Right Hand Access Cover

NOT FOR RESALE

Removing the Access Covers

The underhood access covers conceal various components. You may need to remove one or more access covers to reach a desired component. See *Underhood Compartment Overview* ⇨ *305*.

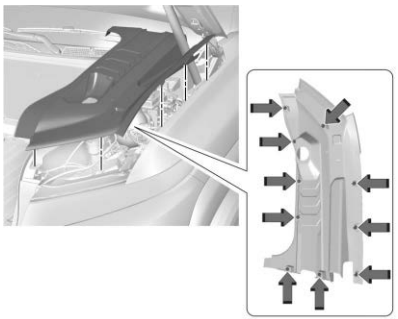

Right Hand Access Cover Shown, Left Hand Access Cover Similar

The covers interlock with various tabs and clips, and must be removed and replaced carefully.

Ensure all access covers are securely attached to the other covers before closing the hood.

Underhood Compartment Overview

⚠ Warning

You or others could be injured if caught in the path of the power hood. Make sure there is no one in the way of the hood as it is opening and closing.

There are several items located under the hood that you should check periodically.

For instructions on opening the hood, see *Hood* ⇨ *18*.

NOT FOR RESALE

There are several items located under the underhood access covers. For instructions on removing the covers, see *Underhood Access Covers* ⇨ *304*.

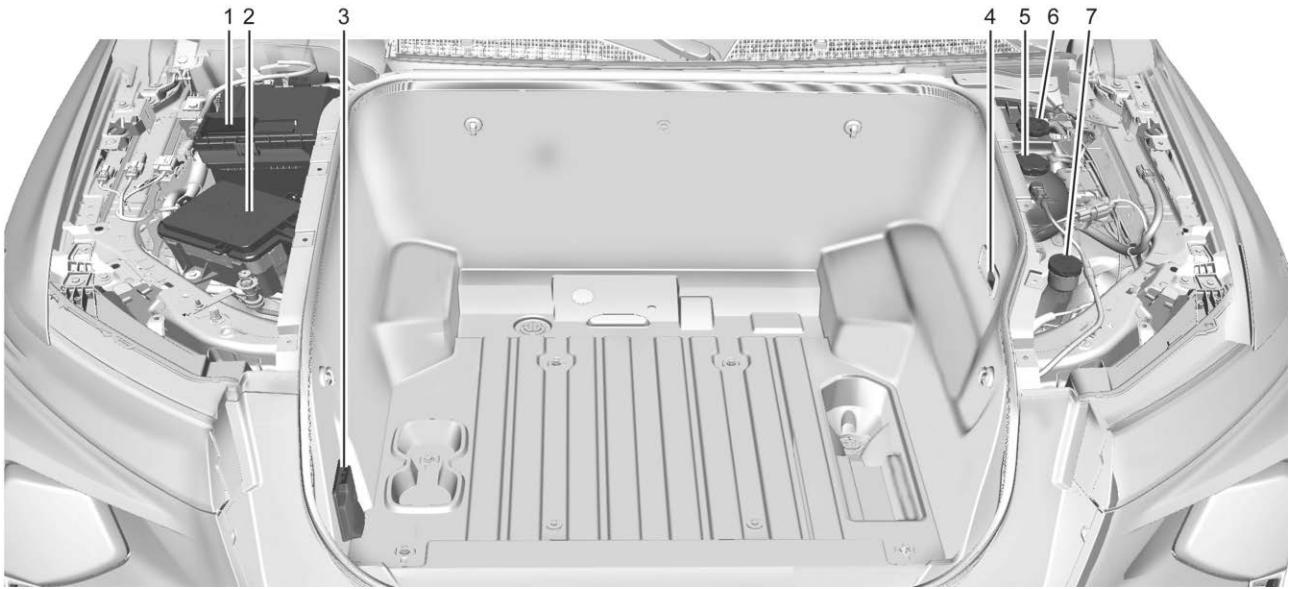

1. Battery (Under Cover). See *Battery - North America* ⇨ *311*.
2. Underhood Compartment Fuse Block (Under Cover). *Underhood Compartment Fuse Block* ⇨ *319*.
3. Power Outlet. See *Power Outlets* ⇨ *101*.
4. Emergency Hood Release Button. See *Hood* ⇨ *18*.
5. Coolant Surge Tank and Pressure Cap (Under Cover). See *Cooling System* ⇨ *307*.

NOT FOR RESALE

6. Brake Fluid Reservoir (Under Cover). See *Brake Fluid* ⇨ *310*.
7. Windshield Washer Fluid Reservoir. See *Washer Fluid* ⇨ *309*.

Cooling System

⚠ Warning

If the coolant inside the surge tank is boiling, do not do anything else until the cooling system cools down. You or others could be burned. You should have your vehicle checked by your GM dealer.

⚠ Warning

The coolant system hoses and related components become hot during vehicle operation. To avoid potential burns, do not touch these components while they are still hot.

Electric vehicles have one or more independent cooling systems designed to control the temperature of the high voltage battery, power electronic modules, and cabin heating. These cooling systems are complex and should only be serviced by a qualified technician.

Cooling System Pressure Caps

Caution

If the pressure caps are not secured and tightened properly, coolant loss and damage to the vehicle and/or its electrical systems may occur. Always visit your local GM dealer for service to the electric vehicle cooling systems.

Electric vehicle cooling system pressure caps are tamper-resistant and must be fully installed on the coolant surge tanks at all times. The coolant should only be serviced by a qualified technician.

Coolant

Caution

GM electric vehicle cooling systems require a 50/50 mix of dexcool and de-ionized water. Use only ACDelco Premix (50/50 mixture of dexcool and de-ionized water), which is available from your dealer. Do not use dexcool mixed with tap water or distilled water in an electric vehicle cooling system as it could damage and/or contaminate the cooling system and related components. The vehicle could become disabled.

The electric vehicle cooling systems are filled with coolant that meets GM Standards GMW18270 and GMW3420 (DEXCOOL). This coolant is designed to remain in the vehicle for five years or 240,000 km (150,000 miles), whichever occurs first.

NOT FOR RESALE

How to Add Coolant to the Coolant Surge Tank

Warning

Use only ACDelco Premix (50/50 mixture of dexcool and de-ionized water), which is available from your dealer. Do not use any other coolant or mixture. Plain water or other liquid may cause cooling system corrosion and/or cooling system being frozen which eventually may cause a loss of propulsion while driving.

Warning

Do not drive the vehicle if there is a coolant leak. Coolant loss can indicate a problem. All the coolant could leak out, causing the vehicle to suddenly lose propulsion while driving, which could result in a crash causing vehicle damage or personal injury/death. Always visit your local GM dealer for electric vehicle cooling systems service.

The coolant needs to be replaced at the appropriate interval. See *Maintenance Schedule* ⇨ *375*.

The coolant reservoir is in the underhood compartment. See *Underhood Compartment Overview* ⇨ *305*.

To access the coolant reservoir under the hood, the right side access cover needs to be removed.

1. Park on a level surface and turn the vehicle off.
2. Open the hood. See *Hood* ⇨ *18*.

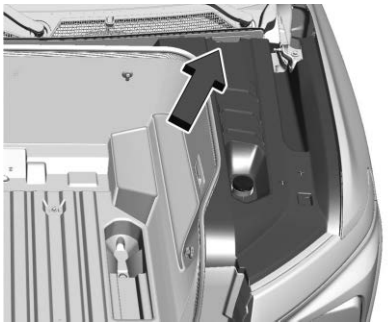

3. Complete a three-quarter turn on each of the three bolts and remove the right side access cover.

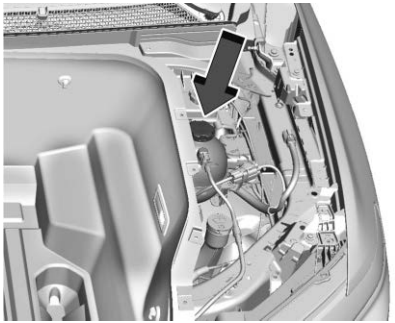

4. After the system has completely cooled, check that the coolant level in the reservoir.

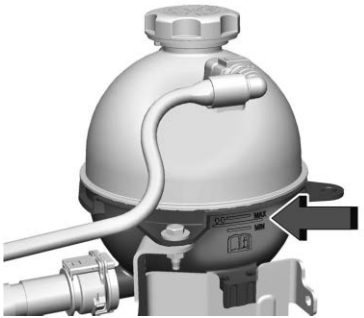

NOT FOR RESALE

5. If the coolant level is not visible or needs to be adjusted within the reservoir, contact your dealer.

Washer Fluid

What to Use

Caution

- Do not use washer fluid that contains any type of water repellent coating. This can cause the wiper blades to chatter or skip.
- Do not use engine coolant (antifreeze) in the windshield washer. It can damage the windshield washer system and paint.
- Do not mix water with ready-to-use washer fluid. Water can cause the solution to freeze and damage the washer fluid tank and other parts of the washer system.
- When using concentrated washer fluid, follow the manufacturer instructions for adding water.

(Continued)

Caution (Continued)

- Fill the washer fluid tank only three-quarters full when it is very cold. This allows for fluid expansion if freezing occurs, which could damage the tank if it is completely full.

Always read the manufacturer's instructions before adding windshield washer fluid. If you are in an area where the temperature may fall below freezing, use a fluid that has sufficient protection against freezing.

Adding Washer Fluid

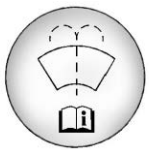

Open the cap with the washer symbol on it. Add washer fluid until the tank is full. See *Underhood Compartment Overview* ⇨ *305* for reservoir location.

Brakes

Inspections

Visually inspect brake system components as follows:

- Brake lines and hoses for proper attachment, connections, binding, leaks, cracks, and chafing.
- Disc brake pads for wear and rotors for surface condition.
- Drum brake linings/shoes for wear or cracks.
- All other brake parts for cracks and leaks.

When tires are rotated, inspect drum brake linings or disc brake pads for wear.

Troubleshooting

Brake Pedal Travel

See your dealer if the brake pedal does not return to normal height, or if there is a rapid increase in pedal travel. This could be a sign that brake service may be required.

Brake Pulsation

If brakes are pulsating:

NOT FOR RESALE

- Inspect rotors, pads, linings for uneven wear. Resurface or replace as needed.
- Check torque on all wheel nuts. Properly torqued wheel nuts are necessary to help prevent brake pulsation. Evenly tighten wheel nuts in the proper sequence to torque specifications. See *Capacities and Specifications* ⇨ *380*.

Brake Squeal and Brake Wear Indicators

⚠ Warning

The brake wear warning sound means that soon the brakes will not work well. That could lead to a crash. When the brake wear warning sound is heard, have the vehicle serviced.

Disc brake linings have built-in wear indicators that make a high-pitched warning sound when the brake linings are worn, and new linings are needed. The sound can come and go or can be heard all the time when the vehicle is moving, except when applying the brake pedal firmly.

Some driving conditions or climates can cause a brake squeal when the brakes are first applied, clearing up following several applications. This does not mean something is wrong with the brakes.

Replacing Brake System Parts

Caution

Continuing to drive with worn-out brake linings could result in costly brake repairs.

Brake pads should be replaced as complete axle sets.

Always replace brake system parts with new, approved replacement parts. If this is not done, the brakes may not work properly. The braking performance can change in many ways if the wrong brake parts are installed or if parts are improperly installed.

Brake Fluid



The brake master cylinder reservoir is filled with GM approved DOT 4 brake fluid as indicated on the reservoir cap.

Checking Brake Fluid

1. Place the vehicle in P (Park) on a level surface.
2. Locate the brake fluid reservoir. See *Underhood Compartment Overview* ⇨ *305* for the reservoir location.
3. Clean the brake fluid reservoir cap and the area around the cap before removing it to prevent dirt or debris from contaminating the brake fluid.
4. Check that the brake fluid level is between “MIN” and “MAX” marks on the brake fluid reservoir.
5. Review “Adding Brake Fluid” and “Low Brake Fluid” later in this section.

NOT FOR RESALE

Low Brake Fluid

When the brake fluid falls to a low level, the brake warning light comes on. See *Brake System Warning Light* ⇨ *114*.

Low brake fluid may be a result of normal brake lining wear or a brake system fluid leak.

- Do not top off the brake fluid. Adding fluid does not correct the issue if the linings are worn. Fluid level will return to normal when new linings are installed.
- The brakes will not work as normal. See your dealer to have the brake hydraulic system fixed.

Adding Brake Fluid

⚠ Warning

The wrong or contaminated brake fluid could result in damage to the brake system. This could result in the loss of braking leading to a possible injury. Always use the proper GM approved brake fluid.

Caution

If brake fluid is spilled on the vehicle's painted surfaces, the paint finish can be damaged. Immediately wash off any painted surface.

Caution

If too much brake fluid is added, the brake fluid can spill and cause vehicle damage, including damage to electrical components and surfaces. Add brake fluid only when work is done on the brake hydraulic system.

Brake fluid absorbs water over time which degrades the effectiveness of the brake fluid. Replace brake fluid at the specified intervals to prevent increased stopping distance. See *Maintenance Schedule* ⇨ *375*.

Use only GM approved DOT 4 brake fluid from a clean, sealed container. See *Recommended Fluids and Lubricants* ⇨ *378*.

Battery - North America

This vehicle has a high voltage battery and a standard 12-volt battery.

See your dealer if either the 12-volt or high voltage battery needs service.

⚠ Warning

WARNING: Battery posts, terminals and related accessories can expose you to chemicals including lead and lead compounds, which are known to the State of California to cause cancer and birth defects or other reproductive harm. Wash hands after handling. For more information go to www.P65Warnings.ca.gov.

See *California Proposition 65 Warning* ⇨ *1*.

12-Volt Battery

The vehicle has an Absorbed Glass Mat (AGM)/Valve-Regulated Lead-Acid (VRLA) 12-volt maintenance-free battery.

- Do not remove the cap or add fluid.
- Do not install a standard 12-volt battery. Doing so will result in reduced 12-volt battery life. Refer to the replacement

NOT FOR RESALE

number shown on the original battery label when the vehicle needs a new 12-volt battery.

- If using a battery charger, use the Absorbed Glass Mat (AGM) setting, if equipped, to limit the charge voltage to 14.8 volts.

If the 12-volt battery is low, the vehicle may not start and could enter a faulted state, resulting in a battery warning light, the inability to shift into D (Drive), and a blank infotainment screen. If the 12-volt battery is low, follow the jump starting procedure. See *Jump Starting - North America* ⇨ *360*.

Once charged, turn the vehicle on, then turn it off. Do not operate or interact with the vehicle for 15 minutes to allow the system to reset. After the reset, start the vehicle. If the faulted state persists, see your dealer for service.

High Voltage Battery

Only a trained service technician should inspect, test, or replace the high voltage battery. See your dealer for information on how to recycle the high voltage battery or go to https://www.recyclemybattery.com.

⚠ Warning

Damage to the high voltage battery or high voltage system can create a risk of electric shock, overheating, or fire.

If the vehicle is damaged from a moderate to severe crash, flood, fire, or other event, the vehicle should be inspected as soon as possible. Until the vehicle has been inspected, store it outside at least 15 m (50 ft) from any structure or anything that can burn. Ventilate the vehicle by opening a window or a door.

Contact Customer Assistance as soon as possible to determine whether an inspection is needed. See *Customer Assistance Offices* ⇨ *385*.

If the vehicle is in a crash, the sensing system may shut down the high voltage system. If this occurs, the high voltage battery disconnects and the vehicle will not start. The SERVICE VEHICLE SOON message in the Driver Information Center will display. See your dealer for service before operating the vehicle again. If a crash occurs or an airbag(s) inflates, see *If a Crash Occurs* ⇨ *389* and *What Will You See After an Airbag Inflates?* ⇨ *62* for additional information.

Battery Temperature

⚠ Warning

This vehicle is equipped with high voltage battery thermal detection, mitigation, and notification software. If the high voltage battery overheats, it may create a risk of a vehicle fire and may result in damage to property, serious injury, or death.

If the high voltage battery overheats, an audible alarm may sound, a message may display on the Driver Information Center (DIC), and OnStar may be called. To alert others outside your vehicle, the horn may sound, and the lights may flash.

If driving, pull over as soon as possible to a safe location at least 50 feet (15 m) away from any structure or anything that may burn. Park your vehicle, set the parking brake, and turn the vehicle off. Open a window or door for ventilation.

(Continued)

NOT FOR RESALE

Warning (Continued)

Remove the remote key and move yourself and others to a safe, upwind location away from the vehicle. Do not return to the vehicle or attempt to restart or drive the vehicle.

Call emergency services and inform them that an electrical vehicle high voltage battery is overheating.

Never attempt to put out a vehicle fire.

Your vehicle must be towed to an authorized dealer to have the high voltage battery inspected before the vehicle can be operated again.

Keep the vehicle plugged in, even when fully charged, to keep the high voltage battery temperature ready for the next drive. This is important when outside temperatures are extremely hot or cold.

Extremely cold temperatures or a high voltage battery that is too cold can reduce propulsion power. The message BATTERY TOO COLD, PLUG IN TO WARM will display. If the message displays, use a level 2 charger to heat the battery to a minimum temperature to enable propulsion or charging.

Your dealer offers a vehicle cover, which can reduce sun loading on the vehicle and improve high voltage battery life.

Federal Communications Commission (FCC) Radiation Exposure Statement

This equipment has been evaluated to be installed and operated at a minimum distance of 5.7 cm (2.2 in) between the device and your body. The vehicle design ensures this distance is maintained during normal use. Changes or modifications to any of these systems by other than an authorized service facility could void authorization to use this equipment.

Vehicle Storage

When storing the vehicle for any length of time, leave the charge cord plugged in. The vehicle monitors and maintains the 12-volt battery daily. It is okay to leave the vehicle plugged in for extended periods of time. Very little energy is required to maintain the 12-volt battery and high voltage battery.

If it is not possible to store the vehicle with the charge cord left plugged in, charge the high voltage battery before storing. The vehicle will stop maintenance of the 12-volt battery if the high voltage battery state of charge gets too low.

When storing the vehicle on a long-term basis:

- Keep the high voltage battery state of charge at 30%.
- Attach an Absorbed Glass Mat (AGM)/Valve-Regulated Lead-Acid (VRLA) compatible battery tender or trickle charger to the 12-volt battery.
- Keep the remote key more than 3 m (10 ft) away from the vehicle.

12-Volt Battery

⚠ Warning

Batteries have acid that can burn you and gas that can explode. You can be badly hurt if you are not careful. Always wear eye protection. See *Jump Starting - North America* ⇨ *360* for tips on working around a battery without getting hurt.

NOT FOR RESALE

Caution

The vehicle is equipped with an AGM/VRLA 12-volt battery, which can be damaged by using the incorrect type of trickle charger. An AGM/VRLA-compatible charger must be used, with the appropriate setting selected. Follow the trickle charger manufacturer instructions.

Do not disconnect the 12-volt battery during storage.

You may attach a trickle charger to the 12-volt battery terminals or trickle charge from the underhood remote positive (+) and negative (–) terminals. See *Jump Starting - North America* ⇨ *360* for location of these terminals.

With a trickle charger connected to the 12-volt battery, the vehicle will still monitor the 12-volt battery daily, but it will not use energy from the high voltage battery for maintenance.

High Voltage Battery

After extended storage, the vehicle may not operate. If this occurs, plug in and charge the high voltage battery.

Park Brake and P (Park) Mechanism Check

⚠ Warning

When you are doing this check, the vehicle could begin to move. You or others could be injured and property could be damaged. Make sure there is room in front of the vehicle in case it begins to roll. Be ready to apply the regular brake at once should the vehicle begin to move.

To check the electric parking brake and P (Park) mechanism:

1. Park on a steep hill with the vehicle facing downhill.
2. Keep your foot on the regular brake and set the electric parking brake.
3. Check the holding ability as follows:
   - **Electric parking brake:** Turn the vehicle on and shift to N (Neutral). Slowly remove your foot from the brake pedal until only the electric parking brake is holding the vehicle.
   - **P (Park) mechanism:** Turn the vehicle on and shift to P (Park). Then release the electric parking brake and slowly remove your foot from the regular brake pedal.

If there is excessive vehicle roll during these checks, contact your dealer for service.

Wiper Blade Replacement

Caution

Allowing the wiper arm to touch the windshield when no wiper blade is installed could damage the windshield. Any damage that occurs would not be covered by the vehicle warranty. Do not allow the wiper arm to touch the windshield.

Windshield wiper blades should be replaced periodically. See the *Maintenance Schedule* ⇨ *375*.

Replacement blades come in different types and are removed in different ways. For proper type and length, see your dealer.

NOT FOR RESALE

To replace the windshield wiper blade:

1. Pull the windshield wiper assembly away from the windshield.

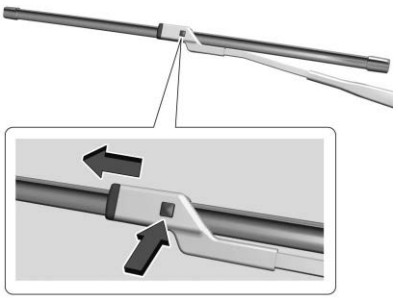

2. Press the button in the middle of the wiper arm connector, and pull the wiper blade away from the arm connector.
3. Remove the wiper blade.
4. Reverse Steps 1–3 for wiper blade replacement.

Glass Replacement

If the windshield or front side glass must be replaced, see your dealer to determine the correct replacement glass.

Windshield Replacement

A replacement windshield must be GM approved and installed according to GM specifications to maintain its features and functionality (for example, Advanced Driver Assistance Systems).

If your vehicle is equipped with any of the following features, see your dealer:

- Advanced Driver Assistance Systems. See *Advanced Driver Assistance Systems* ⇨ *254*.
- Head-Up Display. See *Head-Up Display (HUD)* ⇨ *131*.

Gas Strut(s)

⚠ Warning

If the gas struts that hold open the hood, trunk, and/or liftgate fail, you or others could be seriously injured. Take the vehicle to your dealer for service immediately. Visually inspect the gas struts for signs of wear, cracks, or other damage periodically. Check to make sure the hood/trunk/liftgate

(Continued)

Warning (Continued)

is held open with enough force. If struts are failing to hold the hood/trunk/liftgate, do not operate. Have the vehicle serviced.

Caution

Do not apply tape or hang any objects from gas struts. Also do not push down or pull on gas struts. This may cause damage to the vehicle.

Your vehicle may be equipped with gas strut(s) to provide assistance in lifting and holding open the hood/trunk/liftgate system in full open position.

See your dealer to have the gas strut(s) serviced. See *Maintenance Schedule* ⇨ *375*.

NOT FOR RESALE



Hood

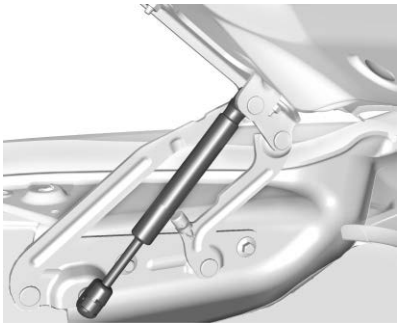

Trunk



Liftgate

Headlight Aiming

Front Headlight Aiming

Headlight aim has been preset and should need no further adjustment.

If the vehicle is damaged in a crash, the headlight aim may be affected. If adjustment to the headlights is necessary, see your dealer.

Bulb Replacement

LED Lighting

This vehicle is equipped with LED light sources for all exterior lights.

The light assemblies do not contain any serviceable light sources (e.g., incandescent bulbs).

For replacement of any LED lighting assembly, contact your dealer.

Electrical System

High Voltage Devices and Wiring

⚠ Warning

Exposure to high voltage can cause shock, burns, and even death. The high voltage components in the vehicle can only be serviced by technicians with special training.

High voltage components are identified by labels. Do not remove, open, take apart, or modify these components. High voltage cable or wiring has orange covering or labels. Do not probe, tamper with, cut, or modify high voltage cable or wiring.

NOT FOR RESALE

Electrical System Overload

The vehicle has fuses and circuit breakers to protect the wires powering the devices in your vehicle against an electrical system overload.

Circuit breakers open and close to protect the circuit when the electrical load is too heavy. The internal filament may permanently open under a heavy load. If this happens, replace the fuse to restore the protected electrical function and reduce the risk of circuit overload and electrical fire.

Fuses and circuit breakers protect the wires powering the devices in your vehicle.

To check a fuse, look at the band inside the fuse. If the band is broken or melted, replace the fuse. Be sure to replace a bad fuse with a fuse of the identical size and rating.

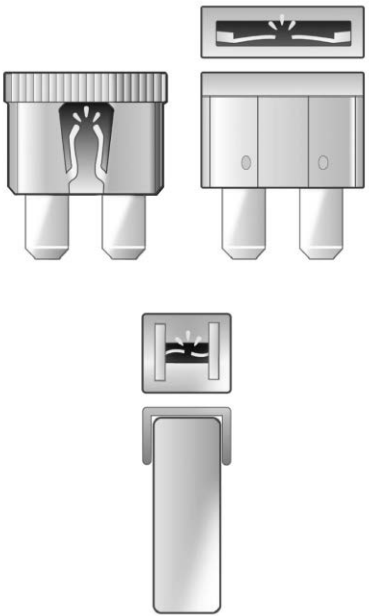

Replacing a Blown Fuse

If you need to replace a fuse, choose a fuse of the same amperage from the fuse block. Use either a SPARE fuse or a non-essential feature if there are no SPARE fuses of the correct amperage. Replace the blown fuse as soon as possible.

To replace a blown fuse:

1. Turn off the vehicle.
2. Locate the fuse puller in the underhood fuse block.

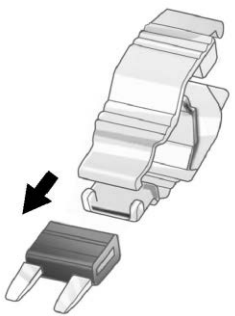

NOT FOR RESALE

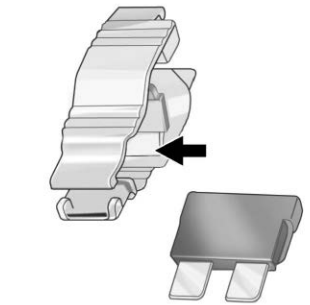

3. Use the fuse puller to remove the fuse from the top or side, as shown above.
4. If the fuse must be replaced immediately, temporarily replace the fuse with one of the same amperage from the fuse block. Choose a non-essential vehicle feature to safely operate the vehicle. Repeat Steps 2–3.
5. Insert the replacement fuse into the empty slot of the blown fuse.

See your dealer to replace the blown fuse.

Headlight Wiring

An electrical overload may cause the lights to go on and off, or in some cases to remain off. See your dealer if the lights go on and off or remain off.

Windshield Wipers

Overload due to heavy snow or ice may cause damage to the wiper linkage. Always clear heavy snow and ice from the windshield before using the windshield wipers.

If the wiper motor overheats due to heavy snow or ice, the windshield wipers will stop until the motor cools. Once the motor has cooled down, the wipers will restart.

Address any electrical overload as soon as possible. See your dealer.

Fuses and Circuit Breakers

⚠ Danger

Fuses and circuit breakers are marked with their ampere rating. Do not exceed the specified amperage rating when replacing fuses and circuit breakers. Use of an

(Continued)

Danger (Continued)

oversized fuse or circuit breaker can result in a vehicle fire. You and others could be seriously injured or killed.

⚠ Warning

Installation or use of fuses that do not meet GM's original fuse specifications is dangerous. The fuses could fail, and result in a fire. You or others could be injured or killed, and the vehicle could be damaged.

The fuses and circuit breakers protect the electrical system from short circuits, greatly reducing the chance of electrical damage or fire.



See *Accessories and Modifications* ⇨ *302* and *General Information* ⇨ *302*.

NOT FOR RESALE

To check or replace a blown fuse, see *Electrical System Overload* ⇨ *317*.

Underhood Compartment Fuse Block

The underhood compartment fuse block is in the underhood compartment on the passenger side of the vehicle. See *Underhood Compartment Overview* ⇨ *305* and *Hood* ⇨ *18*.

Caution
Spilling liquid on any electrical component on the vehicle may damage it. Always keep the covers on any electrical component.

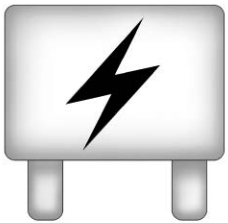

Press the clips on the sides and lift the cover to access the fuse block.

A fuse puller is available in the underhood compartment fuse block. To replace a blown fuse, see *Electrical System Overload* ⇨ *317*.

NOT FOR RESALE

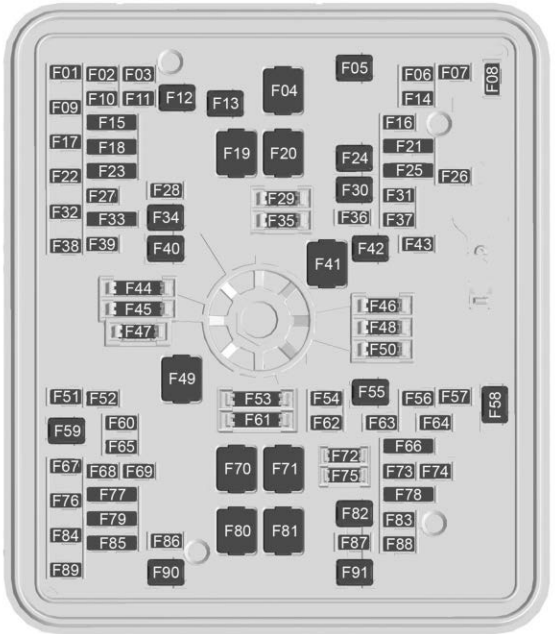

The vehicle may not be equipped with all the fuses, relays, and features shown. For the most accurate fuse amperage ratings and functions, refer to the fuse label.

Fuses	Usage
F01	–
F02	–
F03	–
F04	–
F05	–
F06	ACEC – Air Conditioning Electric Compressor
F07	ESSCP – Energy Storage System Coolant Pump
F08	–
F09	PECP – Power Electric Cooling Pump
F10	–
F11	–
F12	–
F13	TRLR_HD – Trailer Headlights

NOT FOR RESALE

Fuses	Usage
F14	–
F15	VLM – Vehicle Leveling Module SPARE
F16	–
F17	ELM 1 – Exterior lighting Module 1
F18	SADS – Semi Active Damping System TAIL LMP LT – Left Tail Light
F19	IECL 2 – Left Internal Electrical Center 2
F20	–
F21	–
F22	IRM_ACM – Integrated Refrigerant Module and Air Conditioning Module

Fuses	Usage
F23	TAIL LMP RT – Right Tail Light VICMS – Vehicle Integrated Control Module
F24	–
F25	–
F26	–
F27	PKLPS_TRLR – Trailer Park Lights
F28	–
F29	SPARE
F30	PUMP_ONE
F31	–
F32	–
F33	SPARE TRLR REV LMPS – Reverse Trailer Lights

Fuses	Usage
F34	TIM1 – Trailer Interface Module 1
F35	SPARE
F36	TPIM1_BAT2
F37	–
F38	TRLR_STP_TRN_LT – Trailer Stop
F39	TRLR_STP_TRN_RT
F40	VLM_M
F41	–
F42	–
F43	–
F44	SPARE
F45	SPARE
F46	SPARE
F47	SPARE
F48	SPARE

NOT FOR RESALE

Fuses	Usage
F49	TBPM – Trailer Brake Power Module
F50	SPARE
F51	MIDGATE MOTOR RIGHT
F52	–
F53	SPARE
F54	PFCM
F55	REAR DEFOG
F56	–
F57	MINOR ENDGATE HIGH
F58	FRNT WIPER
F59	TIM2
F60	PKLPS_ID
F61	SPARE
F62	ELM 3
F63	GLASS BREAK

Fuses	Usage
F64	–
F65	ELM 4
F66	–
F67	EMB/GRILL LIGHT
F68	HDLP_LT
F69	MIDGATE LEFT MOTOR
F70	EBCM 1
F71	DC/AC INV
F72	SPARE
F73	–
F74	–
F75	SPARE
F76	HDLP_RT
F77	–

Fuses	Usage
F78	MIDGATE CROSS BAR MOTOR 2 MIDGATE CROSS BAR MOTOR 1
F79	PCV_PEEV_ALD FR RADAR/VIRTUAL KEY
F80	IECR 2
F81	IECL 1
F82	–
F83	–
F84	V2LIM
F85	SPARE HVS D – HIGH VOLTAGE SERVICE DISCONNECT
F86	HORN
F87	FRT WSHR PMP
F88	–

NOT FOR RESALE

Fuses	Usage
F89	–
F90	–
F91	–

Instrument Panel Fuse Block (Right)

The right instrument panel fuse block is located behind the glove box. It is accessible by removing the hush panel located underneath the glove box. To remove the hush panel, remove the four push-pins that secure the hush panel.

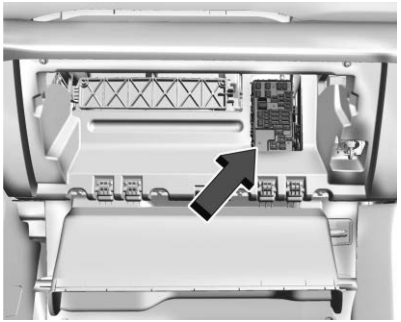

See your dealer for additional assistance.

A fuse puller is available in the underhood compartment fuse block. To replace a blown fuse, see *Electrical System Overload* ⇨ *317*.

NOT FOR RESALE

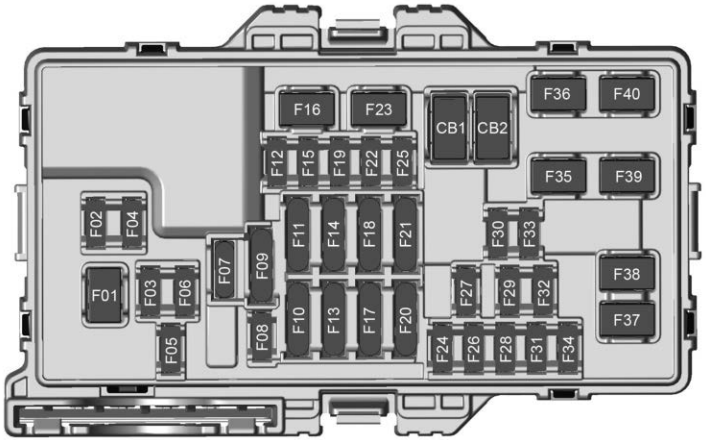

The vehicle may not be equipped with all the fuses, relays, and features shown. For the most accurate fuse amperage ratings and functions, refer to the fuse label.

Fuses	Usage
F01	FRT BLWR MTR – Front Blower Motor
F02	CPM
F03	VDM
F04	SPARE
F05	BCM 2 – Body Control Module 2
F06	BCM 4 – Body Control Module 4
F07	COIL CLOCK SPRING
F08	TBCS/EPB – Trailer Brake Control Switch/Electric Park Brake
F09	ESM SPARE
F10	Displays SPARE
F11	CGM – Central Gateway Module SPARE
F12	Steering Column Lock
F13	SPARE DLC – Data Link Connection

NOT FOR RESALE

Fuses	Usage
F14	BODY MISC
	BODY MISC 1
F15	MISC_IP 1
F16	SPARE
F17	SPARE
F18	BDY 1
	HDLNR
F19	VICM TPIM IGN – Vehicle Integration Control Module/ Traction Power Inverter Module/Ignition
F20	OHC
	HUD
	ETC
F21	VCU
	VCU 2
F22	SPARE
F23	SPARE
F24	FCM_RLH_UGDO
F25	USB_ROW 2
F26	SPARE
F27	USB
F28	SPARE
F29	FRT_HVAC_DIS
F30	SPARE
F31	BCM 3 – Body Control Module 3
F32	HSWM – Heating Steering Wheel Module
F33	SPARE
F34	SPARE
F35	SPARE
F36	SPARE
F37	SPARE
F38	SPARE
F39	SPARE
F40	SPARE

Circuit Breakers	Usage
CB01	APO – Auxiliary Power Outlet Center Console
CB02	SPARE

Instrument Panel Fuse Block (Left)

The left instrument panel fuse block is on the driver side of the instrument panel, between the steering wheel and the door.

NOT FOR RESALE



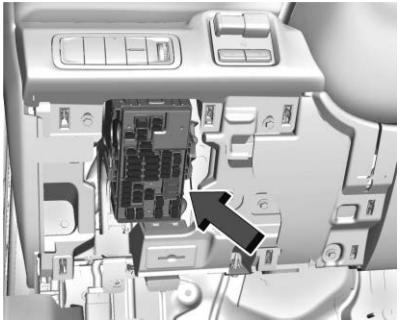

To Access the Fuses

1. Remove the screw at the bottom of the panel.
2. Carefully pull the panel from the bottom to release the clips.
3. Detach the tabs at the top of the panel.

To reassemble, reverse Steps 1-3.

See your dealer for additional assistance.

A fuse puller is available in the underhood compartment fuse block. To replace a blown fuse, see *Electrical System Overload* ⇨ *317*.

NOT FOR RESALE

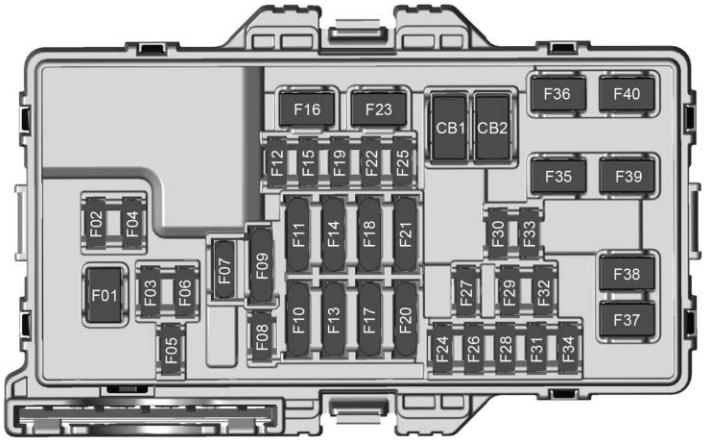

The vehicle may not be equipped with all the fuses, relays, and features shown. For the most accurate fuse amperage ratings and functions, refer to the fuse label.

Fuses	Usage
F01	DRIVER_PWR_ST
F02	VKS_TTPM
F03	VECM
F04	BCM 1 – Body Control Module 1
F05	ELM 5 – Exterior Lighting Module 5
F06	PASSENGER DSP
F07	SPARE
F08	TCP – Telematics Control Platform
F09	4W_Co_Driver PWR LUMBAR
	SPARE
F10	WCM_VKM – Wireless Charger Module
	TVR_APA_PFA
F11	2ND HTD SEAT – 2nd Row Heated Seat
	2ND HTD SEAT – 2nd Row Heated Seat 1
F12	SPARE
F13	TPIM
	TPIM 2
F14	SPARE
F15	SPARE
F16	Tonneau Accessory

NOT FOR RESALE

Fuses	Usage
F17	SDM_AOS
	SRR
F18	SPARE
F19	SPARE
F20	OBCM 2
	MSM
F21	HSM ROW
	HSM ROW 1
F22	SPARE
F23	MJR END HIGH
F24	TPIM 1 & VBAT 1 – Traction Power Inverter Module 1
F25	SPARE
F26	TPIM 2 & VBAT 1 – Traction Power Inverter Module 1
F27	DSP
F28	ELM 7 – Exterior Lighting Module 7

Fuses	Usage
F29	SPARE
F30	MJR END LOW
F31	ELM 2 – Exterior Lighting Module 2
F32	RFR/PLCM
F33	MIDGATE CONTROL LOW
F34	ACP_VPM
F35	AMP – Amplifier
F36	CO-DRVR_PWR_ST
F37	SPARE
F38	ELM 6 – Exterior Lighting Module 6
F39	RT WNDW – Right Hand Power Window
F40	LT WNDW – Left Hand Power Window

Circuit Breakers	Usage
CB01	–
CB02	–

Wheels and Tires

Tires

Every new GM vehicle has high-quality tires made by a leading tire manufacturer. See the warranty manual for information regarding the tire warranty and where to get service. For additional information refer to the tire manufacturer.

⚠ Warning

- Poorly maintained and improperly used tires are dangerous.

(Continued)

NOT FOR RESALE

Warning (Continued)

- Overloading the tires can cause overheating as a result of too much flexing. There could be a blowout and a serious crash. See *Vehicle Load Limits* ⇨ *191*.
- Underinflated tires pose the same danger as overloaded tires. The resulting crash could cause serious injury. Check all tires frequently to maintain the recommended pressure. Tire pressure should be checked when the tires are cold.
- Overinflated tires are more likely to be cut, punctured, or broken by a sudden impact — such as when hitting a pothole. Keep tires at the recommended pressure.
- Worn or old tires can cause a crash. If the tread is badly worn, replace them.

(Continued)

Warning (Continued)

- Replace any tires that have been damaged by impacts with potholes, curbs, etc.
- Improperly repaired tires can cause a crash. Only your dealer or an authorized tire service center should repair, replace, dismount, and mount the tires.
- Do not spin the tires in excess of 56 km/h (35 mph) on slippery surfaces such as snow, mud, ice, etc. Excessive spinning may cause the tires to explode.

All-Season Tires

This vehicle may come with all-season tires. These tires are designed to provide good overall performance on most road surfaces and weather conditions. Original equipment tires designed to GM's specific Tire Performance Criteria (TPC) have a TPC specification code molded onto the sidewall.

Consider installing winter tires on the vehicle if frequent driving on snow or ice-covered roads is expected. All-season tires provide adequate performance for most winter driving conditions, but they may not offer the same level of traction or performance as winter tires on snow or ice-covered roads. See *Winter Tires* ⇨ *329*.

Winter Tires

This vehicle was not originally equipped with winter tires. Winter tires are designed for increased traction on snow and ice-covered roads. Consider installing winter tires on the vehicle if frequent driving on ice or snow covered roads is expected. See your dealer for details regarding winter tire availability and proper tire selection. Also, see *Buying New Tires* ⇨ *341*.

With winter tires, there may be decreased dry road traction, increased road noise, and shorter tread life. After changing to winter tires, be alert for changes in vehicle handling and braking.

If using winter tires:

- Use tires of the same brand and tread type on all four wheel positions.

NOT FOR RESALE

- Use only radial ply tires of the same size, load range, and speed rating as the original equipment tires.

Winter tires with the same speed rating as the original equipment tires may not be available for H, V, W, Y, and ZR speed rated tires. If winter tires with a lower speed rating are chosen, never exceed the tire's maximum speed capability.

All-Terrain Tires

This vehicle may have all-terrain or mud-terrain tires. These tires provide good performance on most road surfaces, weather conditions, and for off-road driving. See *Off-Road Driving* ⇨ *182*.

The tread pattern on these tires may wear more unevenly than other tires. Consider rotating the tires more frequently than at 12 000 km (7,500 mi) intervals if irregular wear is noted when the tires are inspected. See *Tire Inspection* ⇨ *339*.

Tire Sidewall Labeling

Useful information about a tire is molded into its sidewall. The example shows a typical light truck tire sidewall.

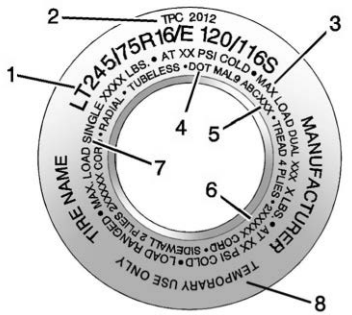

Light Truck (LT-Metric)/Spare Tire

(1) Tire Size : The tire size code is a combination of letters and numbers used to define a particular tire's width, height, aspect ratio, construction type, and service description. See the "Tire Size" illustration later in this section for more detail.

(2) TPC Spec (Tire Performance Criteria Specification) : Original equipment tires designed to GM's specific tire performance criteria have a TPC specification code molded onto the sidewall. GM's TPC specifications meet or exceed all federal safety guidelines.

(3) Dual Tire Maximum Load : Maximum load that can be carried and the maximum pressure needed to support that load when used in a dual configuration. For information on recommended tire pressure see *Tire Pressure* ⇨ *333* and *Vehicle Load Limits* ⇨ *191*.

(4) DOT (Department of Transportation) : The Department of Transportation (DOT) code indicates that the tire is in compliance with the U.S. Department of Transportation Motor Vehicle Safety Standards.

DOT Tire Date of Manufacture : The last four digits of the TIN indicate the tire manufactured date. The first two digits represent the week and the last two digits, the year. For example, the third week of the year 2020 would have a 4-digit DOT date of 0320. Week 01 is the first full week (Sunday through Saturday) of each year.

(5) Tire Identification Number (TIN) : The letters and numbers following the DOT code are the Tire Identification Number (TIN). The TIN shows the manufacturer

NOT FOR RESALE

and plant code, tire size, and date the tire was manufactured. The TIN is molded onto both sides of the tire, although only one side may have the date of manufacture.

(6) Tire Ply Material : The type of cord and number of plies in the sidewall and under the tread.

(7) Single Tire Maximum Load : Maximum load that can be carried and the maximum pressure needed to support that load when used as a single. For information on recommended tire pressure see *Tire Pressure* ⇨ *333* and *Vehicle Load Limits* ⇨ *191*.

(8) Temporary Use Only : Only use a temporary spare tire until the road tire is repaired and replaced. This spare tire should not be driven on over 112 km/h (70 mph), or 88 km/h (55 mph) when pulling a trailer, with the proper inflation pressure. See *Full-Size Spare Tire* ⇨ *360*.

Tire Designations

Tire Size

The examples show a typical light truck tire size.



Light Truck (LT-Metric) Tire

(1) Light Truck (LT-Metric) Tire : The United States version of a metric tire sizing system. The letters “LT” as the first two characters in the tire size mean a light truck tire engineered to standards set by the U.S. Tire and Rim Association.

(2) Tire Width : The 3-digit number indicates the tire section width in millimeters from sidewall to sidewall.

(3) Aspect Ratio : A 2-digit number that indicates the tire height-to-width measurements. For example, if the tire size aspect ratio is 75, as shown in item (3) of the light truck (LT-Metric) tire illustration, it would mean that the tire's sidewall is 75 percent as high as it is wide.

(4) Construction Code : A letter code is used to indicate the type of ply construction in the tire. The letter “R” means radial ply construction; the letter “D” means diagonal or bias ply construction.

(5) Rim Diameter : Diameter of the wheel in inches.

(6) Load Range : Load Range.

(7) Service Description : The service description indicates the load index and speed rating of a tire. If two numbers are given as in the example, 120/116, then this represents the load index for single versus dual wheel usage (single/dual). The speed rating is the maximum speed a tire is certified to carry a load.

NOT FOR RESALE

Tire Terminology and Definitions

Air Pressure : The amount of air inside the tire pressing outward on each square inch of the tire. Air pressure is expressed in kPa (kilopascal) or psi (pounds per square inch).

Aspect Ratio : The relationship of a tire's height to its width.

Belt : A rubber coated layer of cords that is located between the plies and the tread. Cords may be made from steel or other reinforcing materials.

Bead : The tire bead contains steel wires wrapped by steel cords that hold the tire onto the rim.

Bias Ply Tire : A pneumatic tire in which the plies are laid at alternate angles less than 90 degrees to the centerline of the tread.

Cold Tire Pressure : The amount of air pressure in a tire, measured in kPa (kilopascal) or psi (pounds per square inch) before a tire has built up heat from driving. See *Tire Pressure* ⇨ *333*.

DOT Markings : A code molded into the sidewall of a tire signifying that the tire is in compliance with the U.S. Department of Transportation (DOT) Motor Vehicle Safety Standards. The DOT code includes the Tire Identification Number (TIN), an alphanumeric designator which can also identify the tire manufacturer, production plant, brand, and date of production.

GVWR : Gross Vehicle Weight Rating. See *Vehicle Load Limits* ⇨ *191*.

GAWR FRT : Gross Axle Weight Rating for the front axle. See *Vehicle Load Limits* ⇨ *191*.

GAWR RR : Gross Axle Weight Rating for the rear axle. See *Vehicle Load Limits* ⇨ *191*.

Intended Outboard Sidewall : The side of an asymmetrical tire, that must always face outward when mounted on a vehicle.

Kilopascal (kPa) : The metric unit for air pressure.

Light Truck (LT-Metric) Tire : A tire used on light duty trucks and some multipurpose passenger vehicles.

Load Index : An assigned number ranging from 1 to 279 that corresponds to the load carrying capacity of a tire.

Maximum Inflation Pressure : The maximum air pressure to which a cold tire can be inflated. The maximum air pressure is molded onto the sidewall.

Maximum Load Rating : The load rating for a tire at the maximum permissible inflation pressure for that tire.

Occupant Distribution : Designated seating positions.

Outward Facing Sidewall : The side of an asymmetrical tire that has a particular side that faces outward when mounted on a vehicle. The side of the tire that contains a whitewall, bears white lettering, or bears manufacturer, brand, and/or model name molding that is higher or deeper than the same moldings on the other sidewall of the tire.

Passenger (P-Metric) Tire : A tire used on passenger cars and some light duty trucks and multipurpose vehicles.

NOT FOR RESALE

Recommended Inflation Pressure : Vehicle manufacturer's recommended tire inflation pressure as shown on the tire placard. See *Tire Pressure* ⇨ *333* and *Vehicle Load Limits* ⇨ *191*.

Radial Ply Tire : A pneumatic tire in which the ply cords that extend to the beads are laid at 90 degrees to the centerline of the tread.

Rim : A metal support for a tire and upon which the tire beads are seated.

Sidewall : The portion of a tire between the tread and the bead.

Speed Rating : An alphanumeric code assigned to a tire indicating the maximum speed at which a tire can operate.

Traction : The friction between the tire and the road surface. The amount of grip provided.

Tread : The portion of a tire that comes into contact with the road.

Treadwear Indicators : Narrow bands, sometimes called wear bars, that show across the tread of a tire when only 1.6 mm (1/16 in) of tread remains. See *When It Is Time for New Tires* ⇨ *341*.

UTQGS (Uniform Tire Quality Grading Standards) : A tire information system that provides consumers with ratings for a tire's traction, temperature, and treadwear. Ratings are determined by tire manufacturers using government testing procedures. The ratings are molded into the sidewall of the tire. See *Uniform Tire Quality Grading* ⇨ *343*.

Vehicle Capacity Weight : The number of designated seating positions multiplied by 68 kg (150 lbs) plus the rated cargo load. See *Vehicle Load Limits* ⇨ *191*.

Vehicle Maximum Load on the Tire : Load on an individual tire due to curb weight, accessory weight, occupant weight, and cargo weight.

Vehicle Placard : A label permanently attached to a vehicle showing the vehicle's capacity weight and the original equipment tire size and recommended inflation pressure. See “Tire and Loading Information Label” under *Vehicle Load Limits* ⇨ *191*.

Tire Pressure

Tires need the correct amount of air pressure to operate effectively.

⚠ Warning

Neither tire underinflation nor overinflation is good. Underinflated tires, or tires that do not have enough air, can result in:

- Tire overloading and overheating, which could lead to a blowout
- Premature or irregular wear
- Poor handling
- Reduced fuel economy for internal combustion engine vehicles
- Reduced range for electric vehicles

(Continued)

NOT FOR RESALE

Warning (Continued)

Overinflated tires, or tires that have too much air, can result in:

- Unusual wear
- Poor handling
- Rough ride
- Needless damage from road hazards

The Tire and Loading Information label on the vehicle indicates the original equipment tires and the correct cold tire inflation pressures. The recommended pressure is the minimum air pressure needed to support the vehicle's maximum load carrying capacity.

For additional information regarding how much weight the vehicle can carry, and an example of the Tire and Loading Information label, see *Vehicle Load Limits* ⇨ *191*. How the vehicle is loaded affects vehicle handling and ride comfort. Never load the vehicle with more weight than it was designed to carry.

When to Check

Check the pressure of the tires once a month or more.

Do not forget the spare, if the vehicle has one. See *Full-Size Spare Tire* ⇨ *360* for additional information.

How to Check

Use a good quality pocket-type gauge to check tire pressure. Proper tire inflation cannot be determined by looking at the tire. Check the tire inflation pressure when the tires are cold, meaning the vehicle has not been driven for at least three hours or no more than 1.6 km (1 mi).

Remove the valve cap from the tire valve stem. Press the tire gauge firmly onto the valve to get a pressure measurement. If the cold tire inflation pressure matches the recommended pressure on the Tire and Loading Information label, no further adjustment is necessary. If the inflation pressure is low, add air until the recommended pressure is reached. If the inflation pressure is high, press on the metal stem in the center of the tire valve to release air.

Re-check the tire pressure with the tire gauge.

Put the valve caps back on the valve stems to keep out dirt and moisture. Use only valve caps designed for the vehicle by GM. Tire Pressure Monitor System sensors could be damaged and would not be covered by the vehicle warranty.

Tire Pressure for High-Speed Operation

⚠ Warning

Driving at high speeds, 160 km/h (100 mph) or higher, puts additional strain on tires. Sustained high-speed driving causes excessive heat buildup and can cause sudden tire failure. This could cause a crash, and you or others could be killed. Some high-speed rated tires require inflation pressure adjustment for

(Continued)

NOT FOR RESALE

Warning (Continued)

high-speed operation. When speed limits and road conditions allow the vehicle to be driven at high speeds, make sure the tires are rated for high-speed operation, are in excellent condition, and are set to the correct cold tire inflation pressure for the vehicle load.

Tire Pressure Monitor System

The Tire Pressure Monitor System (TPMS) uses radio and sensor technology to check tire pressure levels. The TPMS sensors monitor the air pressure in your tires and transmit tire pressure readings to a receiver located in the vehicle.

Each tire, including the spare (if provided), should be checked monthly when cold and inflated to the inflation pressure recommended by the vehicle manufacturer on the vehicle placard or tire inflation pressure label. (If your vehicle has tires of a different size than the size indicated on the vehicle placard or tire inflation pressure label, you should determine the proper tire inflation pressure for those tires.)

As an added safety feature, your vehicle has been equipped with a tire pressure monitoring system (TPMS) that illuminates a low tire pressure telltale when one or more of your tires is significantly under-inflated.

Accordingly, when the low tire pressure telltale illuminates, you should stop and check your tires as soon as possible, and inflate them to the proper pressure. Driving on a significantly under-inflated tire causes the tire to overheat and can lead to tire failure. Under-inflation also reduces energy efficiency and tire tread life, and may affect the vehicle's handling and stopping ability.

Please note that the TPMS is not a substitute for proper tire maintenance, and it is the driver's responsibility to maintain correct tire pressure, even if under-inflation has not reached the level to trigger illumination of the TPMS low tire pressure telltale.

Your vehicle has also been equipped with a TPMS malfunction indicator to indicate when the system is not operating properly. The TPMS malfunction indicator is combined with the low tire pressure telltale. When the system detects a malfunction, the telltale will flash for approximately one minute and then remain continuously illuminated. This sequence will continue upon subsequent vehicle start-ups as long as the malfunction exists.

When the malfunction indicator is illuminated, the system may not be able to detect or signal low tire pressure as intended. TPMS malfunctions may occur for a variety of reasons, including the installation of replacement or alternate tires or wheels on the vehicle that prevent the TPMS from functioning properly. Always check the TPMS malfunction telltale after replacing one or more tires or wheels on your vehicle to ensure that the replacement or alternate tires and wheels allow the TPMS to continue to function properly.

See *Tire Pressure Monitor Operation* ⇨ *335*.

Tire Pressure Monitor Operation

This vehicle may have a Tire Pressure Monitor System. The system is designed to warn the driver when a low tire pressure condition exists. Tire Pressure Monitor System sensors are mounted onto each tire and wheel assembly, excluding the spare tire and wheel assembly. The sensors monitor the air pressure in the tires and transmit the tire pressure readings to a receiver located in the vehicle.

NOT FOR RESALE



Caution

Tire sealant materials are not all the same. A non-approved tire sealant could damage the TPMS sensors. TPMS sensor damage caused by using an incorrect tire sealant is not covered by the vehicle warranty. Always use only the GM approved tire sealant available through your dealer or included in the vehicle.

When a low tire pressure condition is detected, the system illuminates the low tire pressure warning light located on the instrument cluster. If the warning light comes on, stop as soon as possible and inflate the tires to the recommended pressure shown on the Tire and Loading Information label. See *Vehicle Load Limits* ⇨ *191*.

A message to check the pressure in a specific tire displays in the Driver Information Center. The low tire pressure warning light and the Driver Information Center warning message come on each time the vehicle is started until the tires are inflated to the correct inflation pressure. Use the Driver Information Center or infotainment screen to view the tire pressure levels. For additional information and details about the Driver Information Center operation and displays, see *Driver Information Center (DIC)* ⇨ *127* or *Vehicle Status* ⇨ *129*.

The low tire pressure warning light may come on in cool weather when the vehicle is first started, and then turn off as the vehicle is driven. This could be an early indicator that the air pressure is getting low and needs to be inflated to the proper pressure.

A Tire and Loading Information label shows the size of the original equipment tires and the correct inflation pressure for the tires when they are cold. See *Vehicle Load Limits* ⇨ *191* for an example of the Tire and Loading Information label and its location. Also see *Tire Pressure* ⇨ *333*.

The Tire Pressure Monitor System can warn about a low tire pressure condition, but it does not replace normal tire maintenance. See *Tire Inspection* ⇨ *339*, *Tire Rotation* ⇨ *340*, and *Tires* ⇨ *328*.

Tire Pressure Monitor System Malfunction Light and Message

The Tire Pressure Monitor System will not function properly if one or more of the system sensors are missing or inoperable. When the system detects a malfunction, the low tire pressure warning light flashes for about one minute and then stays on for the remainder of the time the vehicle is on. A Driver Information Center warning message also displays. The malfunction light and Driver Information Center warning message will come on each time the vehicle is started until the problem is corrected. Some of the conditions that can cause these to come on are:

NOT FOR RESALE

- One of the road tires has been replaced with the spare tire. The spare tire does not have a sensor. The malfunction light and the Driver Information Center message should go off after the road tire is replaced and the sensor matching process is performed successfully. See "Tire Pressure Monitor System Sensor Matching Process" later in this section.
- The sensor matching process was not done or not completed successfully after rotating the tires. The malfunction light and the Driver Information Center message should go off after successfully completing the sensor matching process. See "Tire Pressure Monitor System Sensor Matching Process" later in this section.
- One or more sensors are missing or damaged. The Driver Information Center message and the malfunction light should go off when the sensors are installed and the sensor matching process is performed successfully. See your dealer for service.
- Replacement tires or wheels do not match the original equipment tires or wheels. Tires and wheels other than those recommended could prevent the Tire Pressure Monitor System from functioning properly. See *Buying New Tires* ⇨ *341*.
- Operating electronic devices or being near facilities using radio wave frequencies similar to the Tire Pressure Monitor System could cause the sensors to malfunction.

If the system is not functioning properly, it cannot detect or signal a low tire pressure condition. See your dealer for service if the Tire Pressure Monitor System malfunction light and Driver Information Center message come on and stay on.

Tire Fill Alert

⚠ Warning

Overinflating a tire could cause the tire to rupture and you or others could be injured. Do not exceed the maximum pressure listed on the tire sidewall. See *Tire Sidewall Labeling* ⇨ *330* and *Vehicle Load Limits* ⇨ *191*.

If equipped, this feature provides visual and audible alerts outside the vehicle to help when inflating an underinflated tire to the recommended cold tire pressure.

When the low tire pressure warning light comes on:

1. Park the vehicle in a safe, level place.
2. Place the vehicle in P (Park).
3. Set the parking brake.
4. Add air to the tire that is underinflated.

   The turn signal light closest to the tire being inflated with start flashing. When the recommended pressure is reached, the horn sounds once and the turn signal light will stop flashing and turn solid for several seconds before turning off.

Repeat these steps for all underinflated tires that have illuminated the low tire pressure warning light.

If the tire is overinflated by more than 35 kPa (5 psi), the horn will sound multiple times and the turn signal light will continue to flash for several seconds after filling stops.

To release and correct the pressure, while the turn signal light is still flashing, briefly press the center of the valve stem. When the

NOT FOR RESALE

recommended pressure is reached, the horn sounds once and the turn signal light will stop flashing and turn solid for several seconds before turning off.

If the turn signal light does not flash within 15 seconds after starting to inflate the tire, the tire fill alert has not been activated or is not working.

If the hazard warning flashers are on, the tire fill alert visual feedback will not work properly.

The Tire Pressure Monitor System will not activate the tire fill alert properly under the following conditions:

- There is interference from an external device or transmitter.
- The air pressure from the inflation device is not sufficient to inflate the tire.
- There is a malfunction in the Tire Pressure Monitor System.
- There is a malfunction in the horn or turn signal lights.
- The sensor identification code is not registered to the system.
- The sensor battery is low.

If the tire fill alert does not operate due to system interference, move the vehicle about 1 m (3 ft) back or forward and try again. If the tire fill alert feature is not working, use a tire pressure gauge.

Tire Pressure Monitor System Sensor Matching Process – Auto Learn

Each sensor has a unique identification code. The identification code needs to be matched to a new tire/wheel position after rotating the tires or replacing one or more of the system sensors. If equipped with Auto Learn, when a tire is installed, the vehicle must be stationary for about 20 minutes before the system recalculates. The relearn process takes up to 10 minutes, driving at a minimum speed of 20 km/h (12 mph). A dash (-) or pressure value will display in the Driver Information Center. See *Driver Information Center (DIC)* ⇨ *127*. A warning message displays in the Driver Information Center if a problem occurs during the relearn process.

Tire Pressure Monitor System Sensor Matching Process – Manual Learn

Each sensor has a unique identification code. The identification code needs to be matched to a new tire/wheel position after rotating the vehicle's tires or replacing one or more of the system sensors. The sensor matching process should also be performed after replacing a spare tire with a road tire containing the Tire Pressure Monitor System sensor. After a successful matching process is completed, the malfunction light and the Driver Information Center message should turn off the next time the vehicle is started.

The sensors are matched to the tire/wheel positions, using a Tire Pressure Monitor System relearn tool, in the following order: driver side front tire, passenger side front tire, passenger side rear tire, and driver side rear tire. See your dealer for service or to purchase a relearn tool. You can also purchase a relearn tool at www.gmglobaltools.com, search on "TPMS Tool," or by calling 844-742-8471.

There are two minutes to match the first tire/wheel position, and five minutes overall to match all four tire/wheel positions. If it takes longer, the matching process stops and must be restarted.

NOT FOR RESALE

The sensor matching process is:

1. Place the vehicle in P (Park).
2. Set the parking brake.
3. Turn the vehicle on or place the vehicle in Service Mode. See *Power Modes* ⇨ *196*.
4. Select the Vehicle Status icon from the infotainment apps screen.
5. Choose "Tire Pressure" or "Tires," then choose "Relearn Sensors."

   The horn sounds twice to signal the receiver is in relearn mode and the TIRE LEARNING ACTIVE message displays on the Driver Information Center or Infotainment screen.
6. Start with the driver side front tire.
7. Place the relearn tool against the tire sidewall, near the valve stem. Then press the button on the tool to activate the sensor.

   The horn sounds once to confirm that the sensor identification code has been matched to this tire and wheel position.
8. Proceed to the passenger side front tire, and repeat the procedure in Step 7.
9. Proceed to the passenger side rear tire, and repeat the procedure in Step 7.
10. Proceed to the driver side rear tire, and repeat the procedure in Step 7.

    The horn sounds twice to indicate the sensor identification code has been matched to the driver side rear tire, and the sensor matching process is no longer active. The TIRE LEARNING ACTIVE message turns off.
11. Turn the vehicle off.
12. Set all four tires to the recommended air pressure level as indicated on the Tire and Loading Information label.

Tire Inspection

We recommend that the tires, including the spare tire, if the vehicle has one, be inspected for signs of wear or damage at least once a month.

Replace the tire if:

- The indicators at three or more places around the tire can be seen.
- There is cord or fabric showing through the tire's rubber.
- The tread or sidewall is cracked, cut, or snagged deep enough to show cord or fabric.
- The tire has a bump, bulge, or split.
- The tire has a puncture, cut, or other damage that cannot be repaired well because of the size or location of the damage.

Tire Rotation Monitor

If equipped, the Tire Rotation Monitor feature tracks your mileage and alerts you when it is time to schedule a tire rotation. To access this feature, from the infotainment apps screen, select Vehicle Status and navigate to Tire Rotation. See *Vehicle Status* ⇨ *129*.

After rotating the tires, promptly use this feature to reset the Distance since last rotation counter and start tracking for the next rotation. Ensure you only perform the reset after completing the tire rotation.

You can turn the feature alert off. If you do so, you will not receive the Schedule Tire Rotation alert. The mileage counter will remain active.

NOT FOR RESALE

To perform a reset, or turn the notification off or on, select Tire Rotation on the infotainment apps screen and select your desired action.

To rotate your tires, see *Tire Rotation* ⇨ *340*.

Tire Rotation

Tires should be rotated according to the interval listed in the maintenance schedule. See *Maintenance Schedule* ⇨ *375*.

When rotating the tires, inspect the brake pads for signs of wear. See *Brakes* ⇨ *309*.

Tires are rotated to achieve a more uniform wear for all tires. The first rotation is the most important.

Anytime unusual wear is noticed, rotate the tires as soon as possible, check for proper tire inflation pressure, and check for damaged tires or wheels. If the unusual wear continues after the rotation, check the wheel alignment. See *When It Is Time for New Tires* ⇨ *341* and *Wheel Replacement* ⇨ *344*.

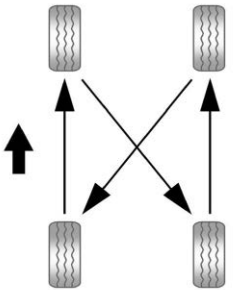

Use this rotation pattern when rotating the tires.

Do not include the spare tire in the tire rotation.

Adjust the front and rear tires to the recommended inflation pressure on the Tire and Loading Information label after the tires have been rotated. See *Tire Pressure* ⇨ *333* and *Vehicle Load Limits* ⇨ *191*.

Reset the Tire Pressure Monitor System. See *Tire Pressure Monitor Operation* ⇨ *335*.

⚠ Warning

Rust or dirt on a wheel, or on the parts to which it is fastened, can cause wheel nuts to become loose over time. The wheel could come off and cause a crash. When changing a wheel, remove any rust or dirt from places where the wheel attaches to the vehicle. In an emergency, a cloth or paper towel can be used; however, use a scraper or wire brush later to remove all rust or dirt.

⚠ Warning

Do not apply grease to the wheel mounting surface, wheel conical seats, or the wheel nuts or bolts. Grease applied to these areas could cause a wheel to become loose or come off, resulting in a crash.

NOT FOR RESALE

Check that all wheel nuts are properly tightened. See "Wheel Nut Torque" under *Capacities and Specifications* ⇨ *380* and "Removing the Flat Tire and Installing the Spare Tire" under *Tire Changing* ⇨ *353*.

Lightly coat the inner diameter of the wheel hub opening with wheel bearing grease after a wheel change or tire rotation to prevent corrosion or rust build-up.

When It Is Time for New Tires

Factors, such as maintenance, temperatures, driving speeds, vehicle loading, and road conditions affect the wear rate of the tires.

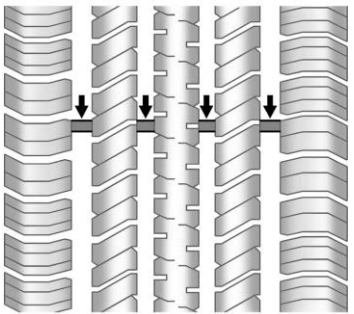

Treadwear indicators are one way to tell when it is time for new tires. Treadwear indicators appear when the tires have only 1.6 mm (1/16 in) or less of tread remaining. See *Tire Inspection* ⇨ *339* and *Tire Rotation* ⇨ *340*.

The rubber in tires ages over time. This also applies to the spare tire, if the vehicle has one, even if it is never used. Multiple factors including temperatures, loading conditions, and inflation pressure maintenance affect how fast aging takes place. GM recommends that tires, including the spare if equipped, be replaced after six years, regardless of tread wear. To identify the age of a tire, use the tire manufacture date, which is the last four digits of the Department of Transportation (DOT) Tire Identification Number (TIN) molded into one side of the tire sidewall. The last four digits of the Tire Identification Number (TIN) indicate the tire manufactured date. The first two digits represent the week and the last two digits, the year. For example, the third week of the year 2020 would have a 4-digit Department of Transportation (DOT) date of 0320. Week 01 is the first full week (Sunday through Saturday) of each year.

Vehicle Storage

Tires age when stored normally mounted on a parked vehicle. Park a vehicle that will be stored for at least a month in a cool, dry, clean area away from direct sunlight to slow aging. This area should be free of grease, gasoline, or other substances that can deteriorate rubber.

Parking for an extended period can cause flat spots on the tires that may result in vibrations while driving. When storing a vehicle for at least a month, remove the tires or raise the vehicle to reduce the weight from the tires.

Buying New Tires

GM has developed and matched specific tires for the vehicle. The original equipment tires installed were designed to meet General Motors Tire Performance Criteria Specification (TPC Spec) system rating. When replacement tires are needed, GM strongly recommends buying tires with the same Tire Performance Criteria Specification (TPC Spec) rating.

GM's exclusive Tire Performance Criteria Specification (TPC Spec) system considers over a dozen critical specifications

NOT FOR RESALE

that impact the overall performance of the vehicle, including brake system performance, ride and handling, traction control, and tire pressure monitoring performance. GM's Tire Performance Criteria Specification (TPC Spec) number is molded onto the tire's sidewall near the tire size.

⚠ Warning

Tires could explode during improper service. Attempting to mount or dismount a tire could cause injury or death. Only your dealer or authorized tire service center should mount or dismount the tires.

⚠ Warning

Mixing tires of different sizes (other than those originally installed on the vehicle), brands, tread patterns, or types may cause loss of vehicle control,

(Continued)

Warning (Continued)

resulting in a crash or other vehicle damage. Use the correct size, brand, and type of tire on all wheels.

⚠ Warning

Using bias-ply tires on the vehicle may cause the wheel rim flanges to develop cracks after many miles of driving. A tire and/or wheel could fail suddenly and cause a crash. Use only radial-ply tires with the wheels on the vehicle.

GM recommends replacing worn tires in complete sets of four. Uniform tread depth on all tires will help to maintain the performance of the vehicle. Braking and handling performance may be adversely affected if all the tires are not replaced at the same time. If proper rotation and maintenance have been done, all four tires should wear out at about the same time. However, if it is necessary to replace only one axle set of worn tires, place the new tires on the rear axle. See *Tire Rotation* ⇨ *340*.

If the vehicle tires must be replaced with a tire that does not have a Tire Performance Criteria Specification (TPC Spec) number, make sure they are the same size, load range, speed rating, and construction (radial) as the original tires.

Winter tires with the same speed rating as the original equipment tires may not be available for H, V, W, Y and ZR speed rated tires. Never exceed the winter tires' maximum speed capability when using winter tires with a lower speed rating.

The Tire and Loading Information label indicates the original equipment tires on the vehicle. See *Vehicle Load Limits* ⇨ *191*.

NOT FOR RESALE

Different Size Tires and Wheels

Warning

If different sized wheels are used, there may not be an acceptable level of performance and safety if tires not recommended for those wheels are selected. This increases the chance of a crash and serious injury. Only use GM specific wheel and tire systems developed for the vehicle, and have them properly installed by a GM certified technician.

If wheels or tires are installed that are a different size than the original equipment wheels and tires, vehicle performance, including its braking, ride and handling characteristics, stability, and resistance to rollover may be affected. If the vehicle has electronic systems such as antilock brakes, rollover airbags, traction control, electronic stability control, or all-wheel drive, the performance of these systems can also be affected.

See *Buying New Tires* ⇨ *341* and *Accessories and Modifications* ⇨ *302*.

Uniform Tire Quality Grading

The following information relates to the system developed by the United States National Highway Traffic Safety Administration (NHTSA), which grades tires by treadwear, traction, and temperature performance. This applies only to vehicles sold in the United States. The grades are molded on the sidewalls of most passenger car tires. The Uniform Tire Quality Grading (UTQG) system does not apply to deep tread, winter tires, compact spare tires, tires with nominal rim diameters of 10 to 12 inches (25 to 30 cm), or to some limited-production tires.

While the tires available on General Motors passenger cars and light trucks may vary with respect to these grades, they must also conform to federal safety requirements and additional General Motors Tire Performance Criteria (TPC) standards.

Quality grades can be found where applicable on the tire sidewall between tread shoulder and maximum section width. For example:

Treadwear 200 Traction AA Temperature A

All Passenger Car Tires Must Conform to Federal Safety Requirements In Addition To These Grades.

Treadwear

The treadwear grade is a comparative rating based on the wear rate of the tire when tested under controlled conditions on a specified government test course. For example, a tire graded 150 would wear one and one-half (1½) times as well on the government course as a tire graded 100. The relative performance of tires depends upon the actual conditions of their use, however, and may depart significantly from the norm due to variations in driving habits, service practices and differences in road characteristics and climate.

NOT FOR RESALE

Traction

The traction grades, from highest to lowest, are AA, A, B, and C. Those grades represent the tire's ability to stop on wet pavement as measured under controlled conditions on specified government test surfaces of asphalt and concrete. A tire marked C may have poor traction performance. Warning: The traction grade assigned to this tire is based on straight-ahead braking traction tests, and does not include acceleration, cornering, hydroplaning, or peak traction characteristics.

Temperature

The temperature grades are A (the highest), B, and C, representing the tire's resistance to the generation of heat and its ability to dissipate heat when tested under controlled conditions on a specified indoor laboratory test wheel. Sustained high temperature can cause the material of the tire to degenerate and reduce tire life, and excessive temperature can lead to sudden tire failure. The grade C corresponds to a level of performance which all passenger car tires must meet under the Federal Motor Safety Standard No. 109. Grades B and A represent higher levels of performance on the laboratory test wheel than the minimum required by law. Warning: The temperature grade for this tire is established for a tire that is properly inflated and not overloaded. Excessive speed, underinflation, or excessive loading, either separately or in combination, can cause heat buildup and possible tire failure.

Wheel Alignment and Tire Balance

The tires and wheels were aligned and balanced at the factory to provide the longest tire life and best overall performance. Adjustments to wheel alignment and tire balancing are not necessary on a regular basis. Consider an alignment check if there is unusual tire wear or the vehicle is significantly pulling to one side or the other. Some slight pull to the left or right, depending on the slope of the road and/or other road surface variations such as troughs or ruts, is normal. If the vehicle is vibrating when driving on a smooth road, the tires and wheels may need to be rebalanced. See your dealer for proper diagnosis.

Wheel Replacement

⚠ Warning

Using the wrong replacement wheels, wheel bolts, or wheel nuts can be dangerous. It could affect the braking and handling of the vehicle. Tires can lose air and cause loss of control, resulting in a crash. Always use the correct wheel, wheel bolts, and wheel nuts for replacement.

⚠ Warning

Replacing a wheel with a used one is dangerous. How it has been used or how far it has been driven may be unknown. It could fail suddenly and cause a crash. When replacing wheels, use a new GM original equipment wheel.

NOT FOR RESALE

Caution

The wrong wheel can also cause problems with bearing life, brake cooling, speedometer or odometer calibration, headlight aim, bumper height, vehicle ground clearance, and tire or tire chain clearance to the body and chassis.

Replace any wheel that is bent, cracked, or badly rusted or corroded. If wheel nuts keep coming loose, the wheel, wheel bolts, and wheel nuts should be replaced. If the wheel leaks air, replace it. Some aluminum wheels can be repaired. See your dealer if any of these conditions exist.

Your dealer will know the kind of wheel that is needed.

Each new wheel should have the same load-carrying capacity, diameter, width, offset, and be mounted the same way as the one it replaces.

Replace wheels, wheel bolts, wheel nuts, or Tire Pressure Monitor System sensors with new GM original equipment parts.

Tire Chains and Other Traction Devices

⚠ Warning

Do not use tire chains if the vehicle has a tire size(s) listed below. There is not enough clearance. Tire chains used on a vehicle without the proper amount of clearance can cause damage to the brakes, suspension, or other vehicle parts. The area damaged by the tire chains could cause loss of control and a crash. Use another type of traction device only if its manufacturer recommends it for the vehicle's tire size combination and road conditions. Follow that manufacturer's instructions. To avoid vehicle damage, drive slow and readjust or remove the traction device if it contacts the vehicle. Do not spin the wheels. If traction devices are used, install them on the tires of the rear axle only.

- LT285/75R18
- LT275/50R22
- LT275/50R24

Caution

If your vehicle is equipped with the tire size(s) listed below, use SAE Class S chains, low profile chains that add no more than 12 mm (0.5 in) thickness to the tire tread and inner sidewall, or textile traction devices, such as snow socks. Use chains that are the proper size for the tires. Install them on the tires of the rear axle only. Tighten them as tightly as possible with the ends securely fastened. Drive slowly and follow the chain manufacturer's instructions. If the chains contact the vehicle, stop and retighten them. If the contact continues, slow down until it stops. Driving too fast or spinning the wheels with chains on will damage the vehicle.

- LT265/70R18

Caution

If your vehicle is equipped with the tire size(s) listed below, use textile traction devices only, such as snow socks, that

(Continued)

NOT FOR RESALE

Caution (Continued)

are the proper size for the tires. Install them on the tires of the rear axle only. Drive slowly and follow the traction device manufacturer's instructions. Driving too fast or spinning the wheels, with the traction device installed, can damage the traction device.

- LT275/50R22

If a Tire Goes Flat

⚠ Warning

Driving on a flat tire will cause permanent damage to the tire. Re-inflating a tire after it has been driven on while severely underinflated or flat may cause a blowout and a serious crash. Never attempt to re-inflate a tire that has been driven on while severely underinflated or flat. Have your dealer or an authorized tire service center repair or replace the flat tire as soon as possible.

It is unusual for a tire to blow out while driving, especially if the tires are maintained properly. It is much more likely for a tire to experience a slow leak. See *Tires* ⇨ *328*.

In the event of a blowout, follow these tips:

- A front tire blowout causes the vehicle to pull toward the side of the flat. Take your foot off the accelerator pedal and grip the steering wheel firmly. Steer to maintain lane position, and then gently brake to a stop.
- A rear blowout, particularly on a curve, acts much like a skid and may require the same correction as used in a skid. Stop pressing the accelerator pedal and steer to straighten the vehicle. It may be very bumpy and noisy. Gently brake to a stop.

If a tire goes flat, avoid further tire and wheel damage by driving slowly to a level place, well off the road, if possible. Turn on the hazard warning flashers. See *Hazard Warning Flashers* ⇨ *140*.

⚠ Warning

Lifting a vehicle and getting under it to do maintenance or repairs is dangerous without the appropriate safety equipment and training. If a jack is provided with the vehicle, it is designed only for changing a flat tire. If it is used for anything else, you or others could be badly injured or killed if the vehicle slips off the jack. If a jack is provided with the vehicle, only use it for changing a flat tire.

If your vehicle is loaded at or near maximum cargo capacity, it may be difficult to fit the jack under the vehicle due to the environment (shoulder slope, road debris, etc.). Removal of some weight may improve the ability to fit the jack under the vehicle at the correct jacking location.

NOT FOR RESALE

⚠ Warning

Changing a tire can be dangerous. The vehicle can slip off the jack and roll over or fall causing injury or death. Find a level place to change the tire. To help prevent the vehicle from moving:

1. Set the parking brake firmly.
2. Put the vehicle in P (Park).
3. Turn the vehicle off and do not restart the vehicle while it is raised.
4. Do not allow passengers to remain in the vehicle.
5. Place wheel blocks, if equipped, on both sides of the tire at the opposite corner of the tire being changed.

This vehicle may come with a jack and spare tire or a tire sealant and compressor kit.

To safely change a flat tire:

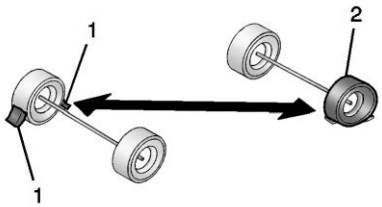

1. If equipped, place wheel blocks (1), as shown, to prevent the vehicle from moving.
2. Use the jacking equipment to change the flat tire (2). See *Tire Changing* ⇨ *353*.

To use the tire sealant and compressor kit to repair a tire, see *Tire Sealant and Compressor Kit* ⇨ *347*.

Tire Sealant and Compressor Kit

⚠ Warning

Overinflating a tire could cause the tire to rupture and you or others could be injured. Be sure to read and follow the tire sealant

(Continued)

Warning (Continued)

and compressor kit instructions and inflate the tire to its recommended pressure. Do not exceed the recommended pressure.

⚠ Warning

Storing the tire sealant and compressor kit or other equipment in the passenger compartment of the vehicle could cause injury. In a sudden stop or collision, loose equipment could strike someone. Store the tire sealant and compressor kit in its original location.

If this vehicle has a tire sealant and compressor kit, there may not be a spare tire or tire changing equipment, and on some vehicles there may not be a place to store a tire.

The tire sealant and compressor can be used to temporarily seal punctures up to 6 mm (0.25 in) in the tread area of the tire. It can also be used to inflate an underinflated tire.

NOT FOR RESALE

If the tire has been separated from the wheel, has damaged sidewalls, or has a large puncture, the tire is too severely damaged for the tire sealant and compressor kit to be effective. See *Roadside Assistance Program* ⇨ *386*.

Read and follow all of the tire sealant and compressor kit instructions.

The kit includes:

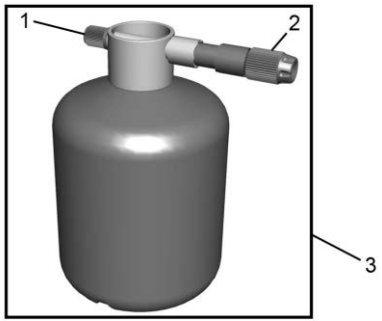

1. Sealant Canister Inlet Valve
2. Sealant/Air Hose
3. Tire Sealant Canister

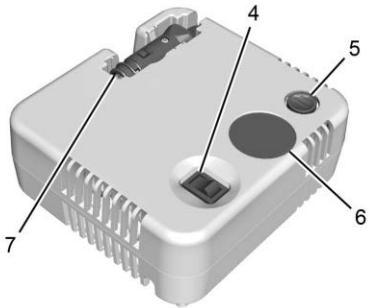

4. On/Off Button
5. Pressure Deflation Button
6. Pressure Gauge
7. Power Plug

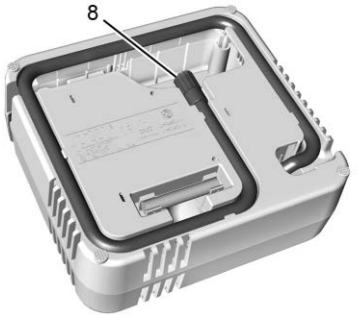

8. Air Only Hose

Tire Sealant

Read and follow the safe handling instructions on the label adhered to the tire sealant canister (3).

Check the tire sealant expiration date on the tire sealant canister. The tire sealant canister (3) should be replaced before its expiration date. Replacement tire sealant canisters are available at your local dealer.

There is only enough sealant to seal one tire. After usage, the tire sealant canister must be replaced.

NOT FOR RESALE

Using the Tire Sealant and Compressor Kit to Temporarily Seal and Inflate a Punctured Tire

When using the tire sealant and compressor kit during cold temperatures, warm the kit in a heated environment for five minutes. This will help to inflate the tire faster.

If a tire goes flat, avoid further tire and wheel damage by driving slowly to a level place. Turn on the hazard warning flashers. See *Hazard Warning Flashers* ⇨ *140*.

See *If a Tire Goes Flat* ⇨ *346* for other important safety warnings.

Do not remove any objects that have penetrated the tire.

1. Remove the tire sealant canister (3) and compressor from its storage location. See *Storing the Tire Sealant and Compressor Kit* ⇨ *353*.
2. Remove the air only hose (8) and the power plug (7) from the compressor.
3. Place the compressor on the ground near the flat tire.

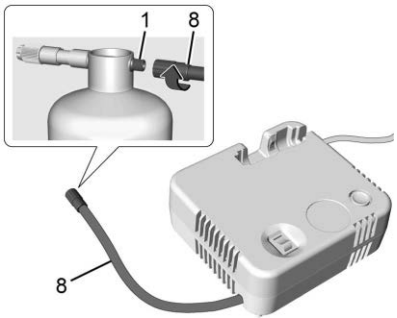

4. Remove the cap from the sealant canister inlet valve (1) by turning it counterclockwise. Attach the air only hose (8) to the sealant canister inlet valve (1) by turning it clockwise until tight.
5. Remove the valve stem cap from the flat tire by turning it counterclockwise.

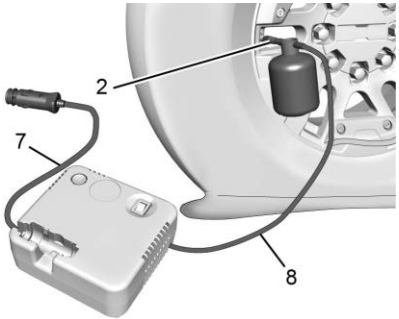

6. Attach the sealant/air hose (2) to the tire valve stem by turning it clockwise until tight.
7. Plug the power plug (7) into the accessory power outlet in the vehicle. Unplug all items from other accessory power outlets. See *Power Outlets* ⇨ *101*.

   If the vehicle has an accessory power outlet, do not use the cigarette lighter.

   If the vehicle only has a cigarette lighter, use the cigarette lighter.

   Do not pinch the power plug cord in the door or window.

NOT FOR RESALE

8. Start the vehicle. The vehicle must be running while using the air compressor.
9. Press the on/off button (4) to turn the tire sealant and compressor kit on.

   The compressor will inject sealant and air into the tire.

   The pressure gauge (6) will initially show a high pressure while the compressor pushes the sealant into the tire. Once the sealant is completely dispersed into the tire, the pressure will quickly drop and start to rise again as the tire inflates with air only.
10. Inflate the tire to the recommended inflation pressure using the pressure gauge (6). The recommended inflation pressure can be found on the Tire and Loading Information label. See *Tire Pressure* ⇨ *333*.

    The pressure gauge (6) may read higher than the actual tire pressure while the compressor is on. Turn the compressor off to get an accurate pressure reading. The compressor may be turned on/off until the correct pressure is reached.

Caution

If the recommended pressure cannot be reached after approximately 25 minutes, the vehicle should not be driven farther. The tire is too severely damaged and the tire sealant and compressor kit cannot inflate the tire. Remove the power plug from the accessory power outlet and unscrew the inflating hose from the tire valve. See *Roadside Assistance Program* ⇨ *386*.

11. Press the on/off button (4) to turn the tire sealant and compressor kit off.

    The tire is not sealed and will continue to leak air until the vehicle is driven and the sealant is distributed in the tire. Therefore, Steps 12–20 must be done immediately after Step 11.

    Be careful while handling the tire sealant and compressor kit as it could be warm after usage.
12. Unplug the power plug (7) from the accessory power outlet in the vehicle.
13. Turn the sealant/air hose (2) counterclockwise to remove it from the tire valve stem.
14. Replace the tire valve stem cap.
15. Turn the air only hose (8) counterclockwise to remove it from the tire sealant canister inlet valve (1).
16. Replace the tire sealant canister inlet valve (1) cap.
17. Return the air only hose (8) and power plug (7) back to their original storage location.



18. If the flat tire was able to inflate to the recommended inflation pressure, remove the maximum speed label from the sealant canister and place it in a highly visible location.

    Do not exceed the speed on this label until the damaged tire is repaired or replaced.
19. Return the equipment to its original storage location in the vehicle.
20. Immediately drive the vehicle 8 km (5 mi) to distribute the sealant in the tire.

NOT FOR RESALE

21. Stop at a safe location and check the tire pressure. Refer to Steps 1–10 under "Using the Tire Sealant and Compressor Kit without Sealant to Inflate a Tire (Not Punctured)."

    If the tire pressure has fallen more than 68 kPa (10 psi) below the recommended inflation pressure, stop driving the vehicle. The tire is too severely damaged and the tire sealant cannot seal the tire. See *Roadside Assistance Program* ⇨ *386*.

    If the tire pressure has not dropped more than 68 kPa (10 psi) from the recommended inflation pressure, inflate the tire to the recommended inflation pressure.

22. Wipe off any sealant from the wheel, tire, or vehicle.
23. Dispose of the used tire sealant canister (3) at a local dealer or in accordance with local state codes and practices.
24. Replace it with a new canister available from your dealer.
25. After temporarily sealing a tire using the tire sealant and compressor kit, take the vehicle to an authorized dealer within 161 km (100 mi) of driving to have the tire repaired or replaced.

Using the Tire Sealant and Compressor Kit without Sealant to Inflate a Tire (Not Punctured)

The kit includes:

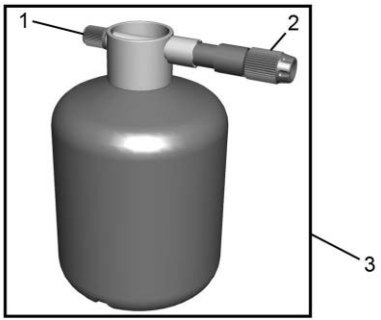

1. Sealant Canister Inlet Valve
2. Sealant/Air Hose
3. Tire Sealant Canister

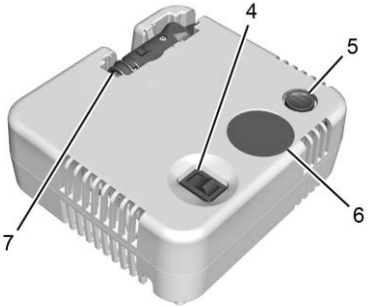

4. On/Off Button
5. Pressure Deflation Button
6. Pressure Gauge

NOT FOR RESALE

7. Power Plug



8. Air Only Hose

If a tire goes flat, avoid further tire and wheel damage by driving slowly to a level place. Turn on the hazard warning flashers. See *Hazard Warning Flashers* ⇨ *140*.

See *If a Tire Goes Flat* ⇨ *346* for other important safety warnings.

1. Remove the compressor from its storage location. See *Storing the Tire Sealant and Compressor Kit* ⇨ *353*.
2. Remove the air only hose (8) and the power plug (7) from the compressor.
3. Place the compressor on the ground near the flat tire.

   Make sure the tire valve stem is positioned close to the ground so the hose will reach it.
4. Remove the valve stem cap from the flat tire by turning it counterclockwise.
5. Attach the air only hose (8) to the tire valve stem by turning it clockwise until tight.
6. Plug the power plug (7) into the accessory power outlet in the vehicle. Unplug all items from other accessory power outlets. See *Power Outlets* ⇨ *101*.

   If the vehicle has an accessory power outlet, do not use the cigarette lighter.

   If the vehicle only has a cigarette lighter, use the cigarette lighter.

   Do not pinch the power plug cord in the door or window.
7. Start the vehicle. The vehicle must be running while using the air compressor.
8. Press the on/off button (4) to turn the tire sealant and compressor kit on.

   The compressor will inflate the tire with air only.
9. Inflate the tire to the recommended inflation pressure using the pressure gauge (6). The recommended inflation pressure can be found on the Tire and Loading Information label. See *Tire Pressure* ⇨ *333*.

   The pressure gauge (6) may read higher than the actual tire pressure while the compressor is on. Turn the compressor off to get an accurate pressure reading. The compressor may be turned on/off until the correct pressure is reached.

Caution

If the recommended pressure cannot be reached after approximately 25 minutes, the vehicle should not be driven farther. The tire is too severely damaged and the tire sealant and compressor kit cannot inflate the tire. Remove the power plug from the accessory power outlet and unscrew the inflating hose from the tire valve. See *Roadside Assistance Program* ⇨ *386*.

10. Press the on/off button (4) to turn the tire sealant and compressor kit off.

    Be careful while handling the compressor as it could be warm after usage.

NOT FOR RESALE

11. Unplug the power plug (7) from the accessory power outlet in the vehicle.
12. Turn the air only hose (8) counterclockwise to remove it from the tire valve stem.
13. Replace the tire valve stem cap.
14. Return the air only hose (8) and power plug (7) back to their original storage location.
15. Return the equipment to its original storage location in the vehicle.

Accessory adapters that can be used to inflate an air mattress or a ball, etc., are located on the bottom of the compressor kit

Storing the Tire Sealant and Compressor Kit

The tire sealant and compressor kit is stored in the underhood compartment. To remove the kit:

1. Open the hood. See *Hood* ⇨ *18*.

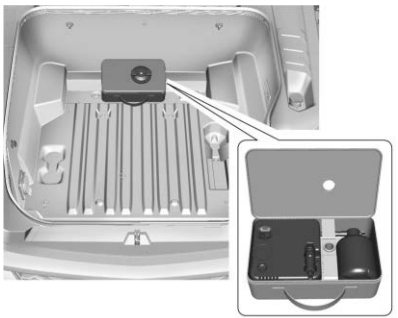

2. Loosen and remove the retainer by turning it counterclockwise.
3. Open the lid and remove the contents, or remove the case and contents.

To store the tire sealant and compressor kit, reverse Steps 1–3.

Tire Changing

Performance Brake Package RPO 5JL

The original spare tire/wheel will not fit onto the front axle if equipped with the performance brake package RPO 5JL. If there is a flat tire on the front axle, a tire/wheel from the rear axle must be used to make the repair. The spare tire will then replace the tire/wheel that is removed from the rear axle.

If equipped with the performance brake package RPO 5JL, and the flat tire is on the front axle, stop after performing all steps in Removing the Spare Tire and Tools and do the following. Otherwise, continue with the procedure:

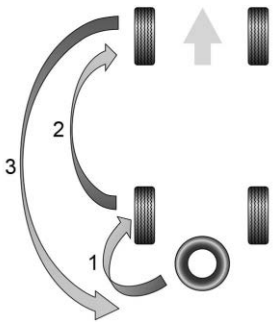

NOT FOR RESALE

1. Remove the rear tire and replace it with the spare tire by performing all steps in Removing the Flat Tire and Installing the Spare Tire.
2. Perform all steps in Removing the Flat Tire and Installing the Spare Tire again this time replacing the flat front tire with the rear tire.
3. Proceed to Storing a Flat or Spare Tire and Tools.

Removing the Spare Tire and Tools

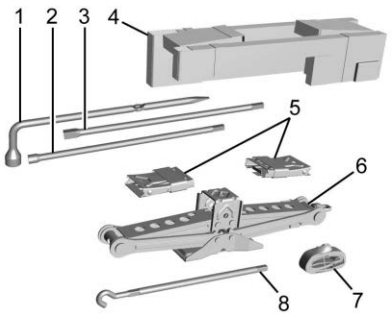

1. Wheel Wrench
2. Wheel Wrench Adapter
3. Wheel Wrench Extension
4. Tool Kit
5. Wheel Blocks
6. Jack
7. Strap
8. Jack Handle

To access the jack and tools:

1. Open the hood. See *Hood* ⇨ *18*.

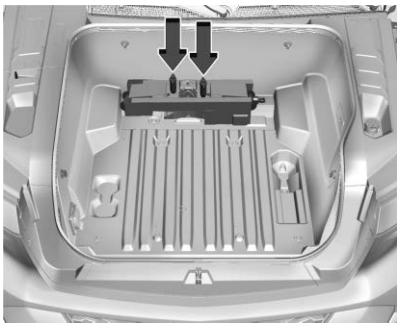

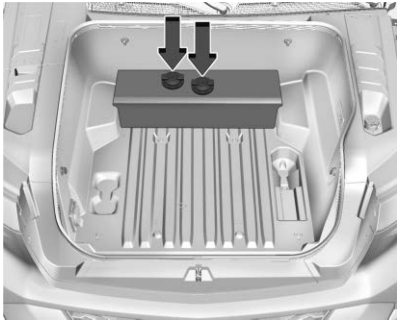

The vehicle may have a jack cover as shown.

2. Loosen and remove the two retainers by turning them counterclockwise. Remove the jack cover, if equipped. Remove the jack and tools. Place the jack near the tire being changed.

NOT FOR RESALE

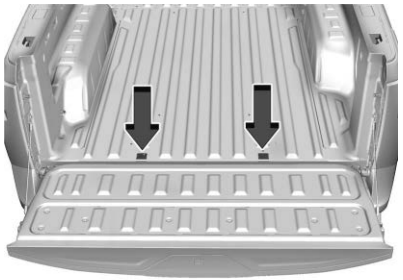

3. Open the tailgate. See *Tailgate* ⇨ *25*. Remove both caps covering the hexagon bolts.

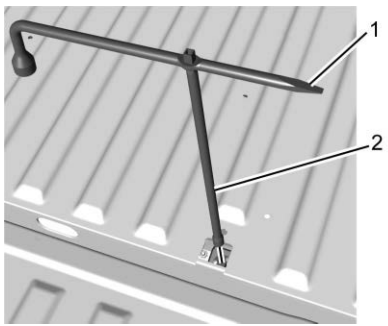

4. Assembly the wheel wrench (1) and wheel wrench adapter (2), and fit over the hexagon bolt as shown.

Caution

Use of an air wrench or other power tools with the carrier mechanism is not recommended and could damage the system. Use only the tools supplied with the carrier mechanism.

5. Turn the wheel wrench counterclockwise until a resistance is noticeable.
6. Repeat Steps 4 and 5 for the other hexagon bolt.

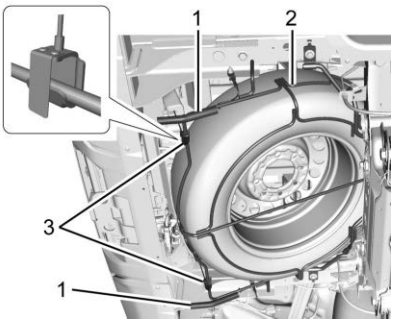

7. Lift the spare tire cage (2) slightly and manually disengage both hook ends (3).

   For easier disengagement of the hook ends, insert the chisel end of the wheel wrench into one of the tubes (1) and apply upward pressure while disengaging the hook. Do this to both sides.



8. Lift the spare tire and remove it from the cage.

   The cage will not lower completely to the ground but will allow ample room to remove the spare tire.
9. The spent road wheel will be stored in the rear of the vehicle. See “Storing a Flat or Spare Tire and Tools.”

NOT FOR RESALE

10. Lift the empty spare tire cage (2) and manually engage both hook ends, with hook openings facing the rear of the vehicle (3).

    Ensure that both hook ends stay engaged with the spare tire cage during the raising process that follows.

11. Assemble the wheel wrench and wheel wrench adapter as in Step 4.
12. Raise the empty spare tire carrier, turning the hexagon bolts clockwise until each side begins to ratchet.

    Ratcheting of both bolts indicates the spare tire carrier has been raised to its maximum, stowed position.

    The spare tire carrier is properly stowed when ratcheting has occurred on both bolts, and the hook ends are engaged and pulled taut from supporting the weight of the cage.

13. Replace the hexagon bolt caps.

Removing the Flat Tire and Installing the Spare Tire

1. If the wheel has a center cap that covers the lug nuts, place the chisel end of the wheel wrench in each of the slots in the cap, and gently pry it out.
2. Do a safety check before proceeding. See *If a Tire Goes Flat* ⇨ *346*.

⚠ Warning

Unexpected wheel motion and/or direction when one or more wheels are off the ground for service work may result in injury. The vehicle may:

- Allow the wheels to rotate unexpectedly in either direction regardless of mode selection.
- Allow the wheels to rotate in reaction to attempts to rotate the tire(s) manually.
- Resist attempts to rotate the wheels manually.

(Continued)

Warning (Continued)

Before lifting the vehicle to do your own service work, turn the vehicle off or place the vehicle in the Service Mode. To place the vehicle in Service Mode, see “Service Mode” under *Power Modes* ⇨ *196*.



3. Turn the wheel wrench counterclockwise to loosen all the wheel nuts, but do not remove them yet.

NOT FOR RESALE

⚠ Warning

Getting under a vehicle when it is lifted on a jack is dangerous. If the vehicle slips off the jack, you could be badly injured or killed. Never get under a vehicle when it is supported only by a jack.

⚠ Warning

Raising the vehicle with the jack improperly positioned can damage the vehicle and even make the vehicle fall. To help avoid personal injury and vehicle damage, be sure to fit the jack lift head into the proper location before raising the vehicle.

⚠ Warning

Lifting a vehicle and getting under it to do maintenance or repairs is dangerous without the appropriate safety equipment and training. If a jack is provided with the vehicle, it is designed only for changing a flat tire. If it is used for anything else, you

(Continued)

Warning (Continued)

or others could be badly injured or killed if the vehicle slips off the jack. If a jack is provided with the vehicle, only use it for changing a flat tire.

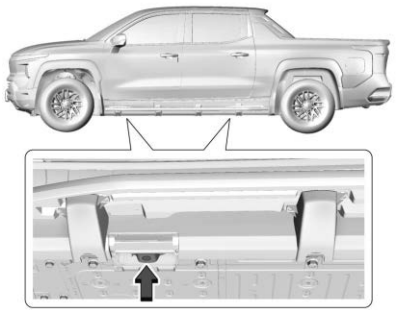

4. Position the jack lift head at the jack position nearest the flat tire.

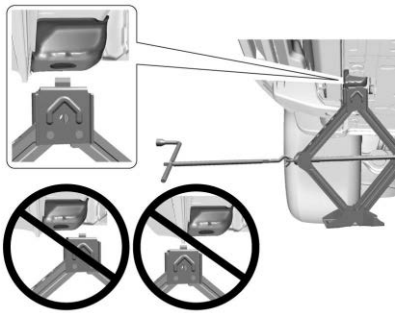

5. Attach the jack handle to the jack by sliding the hook through the end of the jack.
6. Attach the wheel wrench to the end of the jack handle.
7. Raise the jack lift head until it is firmly contacting the lifting point. When properly positioned, the pin on the jack lift head fits inside the hole of the lifting point.

Caution

Make sure that the jack lift head is in the correct position or you may damage your vehicle. The repairs would not be covered by your warranty.

NOT FOR RESALE

8. Raise the vehicle by turning the jack handle clockwise. Raise the vehicle far enough off the ground so there is enough room for the road tire to clear the ground.

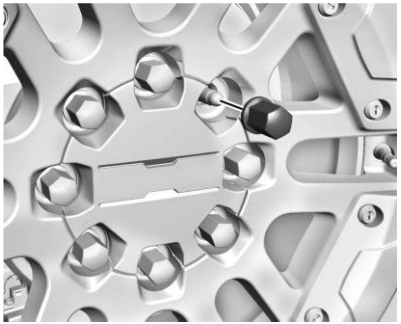

9. Remove all of the wheel nuts.
10. Remove the tire.

⚠ Warning

Rust or dirt on a wheel, or on the parts to which it is fastened, can cause wheel nuts to become loose over time. The wheel could come off and cause a crash.

(Continued)

Warning (Continued)

When changing a wheel, remove any rust or dirt from places where the wheel attaches to the vehicle. In an emergency, a cloth or paper towel can be used; however, use a scraper or wire brush later to remove all rust or dirt.



11. Remove any rust or dirt from the wheel bolts, mounting surfaces, and spare wheel.
12. Place the spare tire on the wheel-mounting surface.

⚠ Warning

Never use oil or grease on bolts or nuts because the nuts might come loose. The vehicle's wheel could fall off, causing a crash.

13. Reinstall the wheel nuts. Tighten each nut by hand until the wheel is held against the hub.
14. Lower the vehicle by turning the jack handle counterclockwise.

⚠ Warning

Wheel nuts that are improperly or incorrectly tightened can cause the wheels to become loose or come off. The wheel nuts should be tightened with a torque wrench to the proper torque specification after replacing. Follow the torque specification supplied by the aftermarket manufacturer when using accessory locking wheel nuts. See *Capacities and Specifications* ⇨ *380* for original equipment wheel nut torque specifications.

NOT FOR RESALE

Caution

Improperly tightened wheel nuts can lead to brake pulsation and rotor damage. To avoid expensive brake repairs, evenly tighten the wheel nuts in the proper sequence and to the proper torque specification. See *Capacities and Specifications* ⇨ *380* for the wheel nut torque specification.

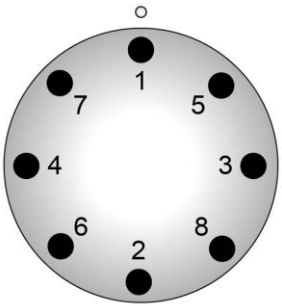

15. Tighten the wheel nuts firmly in a crisscross sequence, as shown.
16. Lower the jack all the way and remove the jack from under the vehicle.
17. Tighten the wheel nuts firmly with the wheel wrench.

Storing a Flat or Spare Tire and Tools

⚠ Warning

Storing a jack, a tire, or other equipment in the passenger compartment of the vehicle could cause injury. In a sudden stop or collision, loose equipment could strike someone. Store all these in the proper place.

To store the flat tire:

1. Return the jack, tools, and jack cover, if equipped, to their original storage location and fasten with the two retainers.
2. Place the flat tire in the rear of the vehicle next to the cab.

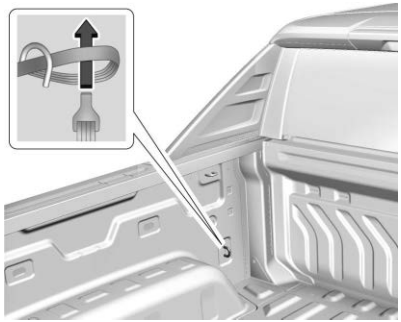

3. Place the loop end of the flat tire secure strap through the lower cargo tie-down on the driver side of the vehicle. Place the hook end of the strap through the loop and pull it until the strap is fastened securely to the tie-down.

NOT FOR RESALE

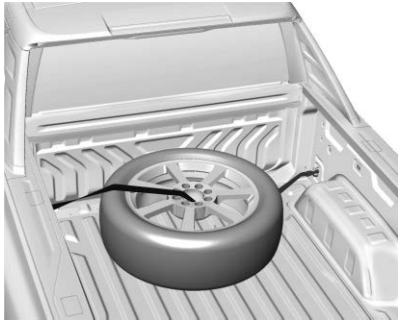

4. Route the hook end of the strap through the wheel, as shown.
5. Attach the hook end to the lower cargo tie-down on the passenger side of the vehicle.
6. Tighten the strap.
7. Close the tailgate and make sure it is fully latched.

Full-Size Spare Tire

If this vehicle came with a full-size spare tire, it was fully inflated when new, however, it can lose air over time. Check the inflation pressure regularly. See *Tire Pressure* ⇨ *333* and *Vehicle Load Limits* ⇨ *191* for information regarding proper tire inflation and loading the vehicle. For instructions on how to remove, install, or store a spare tire, see *Tire Changing* ⇨ *353*.

After installing the spare tire on the vehicle, stop as soon as possible and check that the spare is correctly inflated. The spare tire is made to perform well at speeds up to 112 km/h (70 MPH) at the recommended inflation pressure, so you can finish your trip.

Have the damaged or flat road tire repaired or replaced and installed back onto the vehicle as soon as possible so the spare tire will be available in case it is needed again. Do not mix tires and wheels of different sizes, because they will not fit. Keep the spare tire and its wheel together.

The vehicle may have a different size spare tire than the road tires originally installed on the vehicle. This spare tire was developed for use on this vehicle, so it is all right to drive on it. If the vehicle has four-wheel drive and a different size spare tire is installed, performance may be reduced.

If the vehicle has a spare tire that does not match the original road tires and wheels in size and type, do not include the spare in the tire rotation.

If equipped with a temporary use full-size spare tire, it is indicated on the tire sidewall. See *Tire Sidewall Labeling* ⇨ *330*. This spare tire should not be driven on over 112 km/h (70 mph), or 88 km/h (55 mph) when pulling a trailer, at the proper inflation pressure. Repair and replace the road tire as soon as it is convenient, and stow the spare tire for future use.

Jump Starting

Jump Starting - North America

⚠ Warning

Do not attempt to jump-start the battery if it is overheating, venting, emitting hissing sounds, smoking, or shows signs of damage such as swelling or a damaged case. The battery may cause burns and release hazardous gases. Keep away from the vehicle and contact your dealer.

For more information about the vehicle battery, recovery, and reset process, see *Battery - North America* ⇨ *311*.

NOT FOR RESALE

If the vehicle battery is dead, follow these steps to safely use another vehicle and jumper cables to start your vehicle.

⚠ Warning

WARNING: Battery posts, terminals and related accessories can expose you to chemicals including lead and lead compounds, which are known to the State of California to cause cancer and birth defects or other reproductive harm. Wash hands after handling. For more information go to www.P65Warnings.ca.gov.

See *California Proposition 65 Warning* ⇨ *1*.

⚠ Warning

Batteries can hurt you. They can be dangerous because:

- They contain acid that can burn you.
- They contain gas that can explode or ignite.
- They contain enough electricity to burn you.

(Continued)

Warning (Continued)

If you do not follow these steps exactly, some or all of these things can hurt you.

⚠ Warning

Charging the 12-volt battery and the high voltage battery at the same time may result in overheating or failure. Do not attempt to charge the 12-volt battery and the high voltage battery at the same time. If jumpstarting fails, see your dealer for service.

Caution

The vehicle is equipped with an AGM/VRLA 12-volt battery, which can be damaged by using the incorrect type of trickle charger. An AGM/VRLA-compatible charger must be used, with the appropriate setting selected. Follow the trickle charger manufacturer instructions.

Caution

Ignoring these steps could result in costly damage to the vehicle that would not be covered by the vehicle warranty. Trying to start the vehicle by pushing or pulling it will not work, and it could damage the vehicle.

The battery is under a cover in the underhood compartment.

To access the battery under the hood, the left cover needs to be removed.

Before you connect the cables, here are some basic things you should know. Positive (+) will go to the positive (+) terminal. Negative (–) will go to the negative (–) terminal on the battery providing the jump start to the negative grounding point for the discharged battery.

NOT FOR RESALE

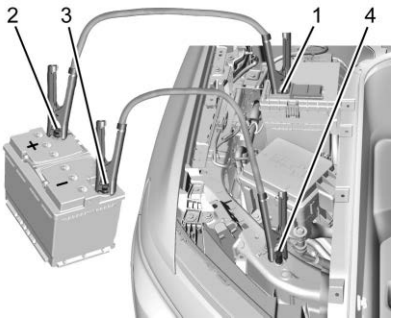

Connection Points and Sequence

1. Discharged Battery Positive (+) Terminal
2. Good Battery Positive (+) Terminal
3. Good Battery Negative (–) Terminal
4. Discharged Battery Negative (–) Grounding Point

The good battery positive (+) terminal and the good battery negative (–) terminal are on the battery of the vehicle providing the jump start.

The discharged battery positive (+) terminal and the discharged battery negative (–) grounding point are on the passenger side of the vehicle.

The discharged battery positive (+) terminal is under a cover. Remove the cover to expose the terminal.

Caution

If the other vehicle does not have a 12-volt system with a negative ground, both vehicles can be damaged. Only use a vehicle that has a 12-volt system with a negative ground for jump starting.

1. Check the other vehicle. It must have a 12-volt battery with a negative ground system.
2. Get the vehicles close enough so the jumper cables can reach, but be sure the vehicles are not touching each other. If they are, it could cause a ground connection you do not want. You would not be able to start the vehicle, and the bad grounding could damage the electrical systems.

   To avoid the possibility of the vehicles rolling, set the parking brake firmly on both vehicles involved in the jump start procedure. Put the vehicles into P (Park). If the other vehicle has a manual transmission, put the vehicle in N (Neutral) before setting the parking brakes.

Caution

If any accessories are left on or plugged in during the jump starting procedure, they could be damaged. The repairs would not be covered by the vehicle warranty. Whenever possible, turn off or unplug all accessories on either vehicle when jump starting.

3. Turn off both vehicles. Unplug unnecessary accessories plugged into the cigarette lighter or the accessory power outlet. Turn off the radio and all lights that are not needed. This will avoid sparks and help save both batteries. And it could save the radio!
4. Open the hood. See *Hood* ⇨ *18*.
5. Lift and remove the left side access cover. See *Underhood Access Covers* ⇨ *304*.
6. Locate the battery positive (+) terminal and negative (–) grounding point.

NOT FOR RESALE

7. Check that the jumper cables do not have loose or missing insulation. If they do, you could get a shock. The vehicles could be damaged too.
8. Connect one end of the red positive (+) cable to the discharged battery positive (+) terminal.

   Do not let the other end touch metal.
9. Connect the other end of the red positive (+) cable to the good battery positive (+) terminal.
10. Connect one end of the black negative (−) cable to the good battery negative (−) terminal.

    Do not let the other end touch anything until the next step.
11. Connect the other end of the negative (−) cable to the discharged battery negative (−) grounding point.
12. Now start the vehicle with the good battery and keep the vehicle running for a while.
13. Turn the vehicle with the dead battery on, then off. Do not operate or interact with the vehicle for 15 minutes to allow the system to reset.
14. After the system resets, try to start the vehicle that had the dead battery. If it will not start after a few tries, have your vehicle serviced.

Caution

If the jumper cables are connected or removed in the wrong order, electrical shorting may occur and damage the vehicle. The repairs would not be covered by the vehicle warranty. Always connect and remove the jumper cables in the correct order, making sure that the cables do not touch each other or other metal.

Jumper Cable Removal

Reverse the sequence exactly when removing the jumper cables.

After starting the disabled vehicle and removing the jumper cables, allow it to idle for several minutes.

After removing the jumper cables, install the left side access cover by pressing it down.

Towing the Vehicle

Transporting a Disabled Vehicle

Caution

Incorrectly transporting a disabled vehicle may cause damage to the vehicle. Use proper tire straps to secure the vehicle to the flatbed tow truck. Do not strap or hook to any frame, underbody, or suspension component not specified below. Do not move vehicles with drive axle tires on the ground. Damage is not covered by the vehicle warranty.

Caution

The vehicle may be equipped with an Electric Parking Brake (EPB) and/or an electronic shifter. In the event of a loss of 12-volt battery power, the EPB cannot be released, and the vehicle cannot be shifted to N (Neutral). Tire skates or dollies must be used under the non-rolling tires to prevent damage while loading/

(Continued)

NOT FOR RESALE

Caution (Continued)

unloading the vehicle. Dragging the vehicle will cause damage not covered by the vehicle warranty.

Contact a professional towing service to transport a disabled vehicle. GM recommends a flatbed tow truck to transport a disabled vehicle. Use ramps to help reduce approach angles, if necessary.

The vehicle must be in N (Neutral) and the electric parking brake must be released when loading the vehicle onto a flatbed tow truck.

- If the vehicle will not start but still has 12-volt battery power, buckle the driver seat belt then press and hold the brake pedal for 60 seconds and shift into N (Neutral).
- If the vehicle is equipped with Car Wash Mode and has 12-volt battery power, see "Car Wash Mode" under *Electric Drive Unit* ⇨ *197* to place the vehicle in N (Neutral).
- If the 12-volt battery is dead and/or the vehicle will not start. Try to jump start the vehicle. See *Jump Starting - North America* ⇨ *360* and if the jump start is successful, retry the "Car Wash Mode" procedure.

Front Attachment Points



The vehicle is equipped with specific attachment points to be used to pull the vehicle onto a flatbed car carrier from a flat road surface. Do not use these attachment points to pull the vehicle from snow, mud, sand, or a ditch.

Recreational Vehicle Towing

Caution

Dolly towing or dinghy towing may damage the vehicle. Always put the vehicle on a flatbed truck or trailer.

This vehicle was neither designed nor intended to be towed with any of its wheels on the ground. If your vehicle is disabled and needs to be towed, see *Transporting a Disabled Vehicle* ⇨ *363*.

Appearance Care

Exterior Care

Locks

Locks are lubricated at the factory. Only use a de-icing agent when absolutely necessary, and have the locks greased after using the de-icing agent. See *Recommended Fluids and Lubricants* ⇨ *378*.

Washing the Vehicle

⚠ Warning

Do not power wash any part of the vehicle's interior, including the vinyl floor covering. This could damage safety and other systems in the vehicle, which would not be covered by the vehicle warranty.

NOT FOR RESALE

Caution

Do not use petroleum-based, acidic, or abrasive cleaning agents as they can damage the vehicle's paint, metal, or plastic parts. If damage occurs, it would not be covered by the vehicle warranty. Approved cleaning products can be obtained from your dealer. Follow all manufacturer directions regarding correct product usage, necessary safety precautions, and appropriate disposal of any vehicle care product.

To preserve the exterior finish, wash it often and out of direct sunlight.

Take care to wash materials such as calcium chloride and other salts, ice melting agents, road oil and tar, tree sap, bird droppings, chemicals from industrial chimneys, etc. from the finish as soon as possible. These materials can damage the finish if they remain on painted surfaces.

Automatic Car Wash

Caution

Some automatic car washes can cause damage to the vehicle, wheels, and ground effects. Some automatic car washes are not recommended, due to lack of clearance for the undercarriage and/or wide rear tires and wheels. Ensure the automatic car wash width is large enough for your vehicle.

When using an automatic car wash, follow the posted instructions carefully.

Before entering the wash:

- Close all windows and sunroof, if equipped.
- Turn off the windshield wipers and rear window wipers, if equipped.
- Remove any accessories that can be damaged or interfere with car wash equipment.
- Close the charge port door.

During the wash:

- If using an automatic car wash with a conveyor system, drive onto the conveyor system, then put the vehicle in N (Neutral).
- If using an automatic car wash without a conveyor system, put the vehicle in N (Neutral), then set the parking brake to prevent the power charge port door, if equipped, from opening unintentionally during the car wash.

Hand Wash

Caution

Take care when washing or drying near vehicle emblems to prevent damage. Damage to emblems may not be covered under vehicle warranty.

Thoroughly rinse all cleaning agents before and after hand washing. Agents left to dry on the exterior may stain the finish.

Dry the exterior finish with a soft, clean chamois or an all-cotton towel to avoid surface scratches and water spotting.

NOT FOR RESALE

Cleaning Underhood Components

Caution
Do not power wash any component under the hood that has this  symbol. This could cause damage that would not be covered by the vehicle warranty.

Only use water when cleaning underhood components. Solvents and aggressive cleaners can be harmful.

Caution
Avoid using high-pressure washers closer than 30 cm (12 in) to the surface of the vehicle. Use of power washers exceeding 8,274 kPa (1,200 psi) can result in damage or removal of paint and decals.

If you choose to use a power washer, use care when handling and follow these criteria:

- Keep water pressure below 8,000 kPa (1,160 PSI).
- Keep water temperature below 80 °C (180 °F).
- Use a spray nozzle with a 40-degree-wide or greater angle spray pattern.
- Keep the nozzle at least 30 cm (12 in) away from all surfaces.

For L234 and L246, engineering requested that power washing underhood components section is removed. These programs receive only Caution SIO 6750263 and the following text.

Caution
Do not power wash any component under the hood. This could cause damage that would not be covered by the vehicle warranty.

Only use water when cleaning underhood components. Solvents and aggressive cleaners can be harmful.

Finish Care

Caution
Do not apply waxes or polishes to uncoated plastic, vinyl, rubber, decals, simulated wood, flat paint, or metal mesh grilles as damage can occur.

Caution
Machine compounding or aggressive polishing on a basecoat/clearcoat paint finish may damage it. Use only non-abrasive waxes and polishes that are made for a basecoat/clearcoat paint finish on the vehicle.

Performing occasional hand waxing or mild polishing removes residue from the paint finish. Do not apply aftermarket clearcoat sealant/wax. See your dealer for approved cleaning products.

Avoid rubbing the finish vigorously. This can create bright spots and an uneven appearance on the finish.

NOT FOR RESALE

Airborne pollutants can cause blotchy, ring-shaped discolorations, and small, irregular dark spots etched into the paint surface. If painted surfaces are damaged, see your dealer to have the damage assessed and repaired.

To keep paint finish looking new, keep the vehicle garaged or covered whenever possible.

Protecting Exterior Bright Metal Moldings

Caution
Failure to clean and protect the bright metal moldings can result in a hazy white finish or pitting. This damage would not be covered by the vehicle warranty.

The bright metal moldings on the vehicle are made of aluminum, chrome, or stainless steel. To prevent damage, always follow these cleaning instructions:

- Be sure the molding is cool to the touch before applying any cleaning solution.
- Use only approved cleaning solutions for aluminum, chrome, or stainless steel. Some cleaners are highly acidic or contain alkaline substances and can damage the moldings.
- Always dilute a concentrated cleaner according to the manufacturer's instructions.
- Do not use cleaners that are not intended for automotive use.
- Use a nonabrasive wax on the vehicle after washing to protect and extend the molding finish.

Spray-In Bedliner Care

Caution
Using silicone-based products may damage the bedliner, reduce the slip-resistant texture, and attract dirt.

A spray-in bedliner is a permanent coating that bonds to the truck bed and cannot be removed. Promptly rinse the bedliner surface following a chemical spill to avoid permanent damage.

Spray-in bedliners can fade from oxidation, road dirt, heavy-duty hauling, and hard water stains. Clean it periodically by washing off the loose dirt and using a mild detergent. To restore the original appearance, apply the bedliner conditioner available through your dealer.

Cleaning Exterior Lights/Lenses, Emblems, Decals, and Stripes

Caution
Failure to clean lights properly can cause damage to the light cover that would not be covered by the vehicle warranty.

Caution
Using wax on low gloss black finish stripes can increase the gloss level and create a non-uniform finish. Clean low gloss stripes with soap and water only.

Use lukewarm or cold water, a soft cloth, and a car washing soap to clean exterior lights, lenses, emblems, decals, and stripes. Follow the instructions under "Washing the Vehicle" previously in this section.

Light covers are made of plastic and may have a UV protective coating. Do not clean or wipe them while they are dry. This can cause scratches to the surface of the light cover.

Do not use any of the following on light covers:

- Abrasive or caustic agents.

NOT FOR RESALE

- Washer fluids and other cleaning agents in higher concentrations than suggested by the manufacturer.
- Solvents, alcohols, fuels, or other harsh cleaners.
- Ice scrapers or other hard items.
- Aftermarket appearance caps or covers while the lights are illuminated. Excessive heat may be generated and can damage the covers.

Air Intakes

Clear debris from the air intakes between the hood and windshield when washing the vehicle.

Shutter System



This vehicle may have a shutter system that automatically closes the frontal cooling opening. This system promotes airflow around the vehicle, reducing drag and providing energy savings. If the shutter system is blocked, the Service Vehicle Soon Light may turn on. Ensure the shutter system is clear of any visible debris, snow, or ice. If the Service Vehicle Soon Light stays on after cleaning the shutter system, see *Service Vehicle Soon Light (Propulsion System Failure)* ⇨ *114*.

Windshield and Wiper Blades

Clean the outside of the windshield with glass cleaner.

Clean rubber wiper blades using a lint-free cloth or paper towel soaked with windshield washer fluid or a mild detergent. Wash the windshield thoroughly when cleaning the blades. Bugs, road grime, sap, and a buildup of vehicle wash/wax treatments may cause wiper streaking.

Extreme dusty conditions, sand, salt, heat, sun, snow, and ice can cause damage. Replace the wiper blades when they are worn or damaged.

Weatherstrips

Apply weatherstrip lubricant once a year to help weatherstrips last longer, seal better, and not stick or squeak. Hot, dry climates may require more frequent application.

Use a clean cloth to remove any black marks caused by weatherstrips.

Tires, Wheels, and Wheel Trim

Caution
Using petroleum-based tire dressing products on the vehicle may damage the paint finish and/or tires. When applying (Continued)

NOT FOR RESALE

Caution (Continued)

a tire dressing, always wipe off any overspray from all painted surfaces on the vehicle.

Use a stiff brush with tire cleaner to clean the tires.

Caution

Chrome wheels and chrome wheel trim may be damaged if the vehicle is not washed after driving on roads that have been sprayed with magnesium chloride or calcium chloride. These are used on roads for conditions such as dust control. Always wash the chrome with soap and water after exposure.

Caution

To avoid surface damage on wheels and wheel trim, do not use strong soaps, chemicals, abrasive polishes, cleaners, or brushes. Use only GM approved cleaners.

(Continued)

Caution (Continued)

Do not drive the vehicle through an automatic car wash that uses silicon carbide tire/wheel cleaning brushes. Damage could occur and the repairs would not be covered by the vehicle warranty.

Use a soft, clean cloth with mild soap and water to clean the wheels. After rinsing thoroughly with clean water, dry with a soft, clean towel. Wax as desired.

Body Component Lubrication

Lubricate all key lock cylinders, hood hinges, tailgate hinges, and the steel charge port door hinge unless the components are plastic. See *Recommended Fluids and Lubricants* ⇨ *378*.

Underbody Maintenance

Caution

For electric or hybrid vehicles, perform regular care around the high voltage system. Do not direct high pressure spray at

(Continued)

Caution (Continued)

or around connectors, cables, or any of the vents. High pressure can damage the seals and battery components.

Every six months, flush any corrosive materials from the underbody with plain water. Take care to thoroughly clean any areas where mud and other debris can collect. If equipped, extend power assist steps and use a high pressure wash to clean all joints and gaps.

Do not directly power wash the transfer case and/or front/rear axle output seals. High pressure water get into the seals and contaminate the fluid. Contaminated fluid decreases the life of the transfer case and/or axles and should be replaced.

Sheet Metal Damage

If the vehicle is damaged and requires sheet metal repair or replacement, use original manufacturer replacement parts which provide corrosion protection and maintain the vehicle warranty.

NOT FOR RESALE

If original manufacturer replacement parts are not used, make sure the body repair shop applies anti-corrosion material to parts repaired or replaced.

Finish Damage

Quickly repair minor chips and scratches with touch-up materials available from your dealer to avoid corrosion. See your dealer's body and paint shop to correct larger areas of finish damage.

Interior Care

To prevent dirt particle abrasions to the interior, regularly clean it. Before using cleaners, read and follow all safety instructions on the label. While cleaning the interior, open the doors and windows for proper ventilation. Newspapers or dark garments can transfer color to the interior.

Caution

Immediately remove cleaners, hand lotions, sunscreen, and insect repellent from all interior surfaces or permanent damage may result.

Caution

Use cleaners specifically designed for the surfaces being cleaned to prevent permanent damage to the vehicle. Apply all cleaners directly to a cleaning cloth. Do not spray cleaners on any switches or controls.

When using liquid soap cleaners, follow the directions on the specific cleaner or soap solution for dilution instructions.

Caution

To prevent damage:

- Never use a razor or any other sharp object to remove soil from any interior surface.
- Never use a brush with stiff bristles.
- Never rub any surface aggressively or with too much pressure.
- Do not power wash any part of the interior or allow any electrical components or wiring to get

(Continued)

Caution (Continued)

wet. Interior surfaces may contain components or wiring that are not visible.

- Do not use laundry detergents or dishwashing soaps with degreasers. Do not use solutions that contain strong or caustic soap.
- Do not heavily saturate the upholstery when cleaning.
- Do not use solvents or cleaners containing solvents.
- Do not use disinfecting wipes that are scented or contain bleach. Do not use wipes or cleaners that show a color transfer to the wipe or change the appearance of the interior surface when used.
- Do not use scented or gel-type hand sanitizers. If hand sanitizer comes in contact with interior surfaces of the vehicle, blot immediately and clean with a soft cloth dampened with a mild soap and water solution.

NOT FOR RESALE

Interior Glass

Caution
To prevent scratching, never use abrasive cleaners on automotive glass. Abrasive cleaners or aggressive cleaning may damage the rear window defogger.

Use a microfiber cloth fabric dampened with water to clean interior glass. Wipe droplets left behind with a clean dry cloth. If necessary, use a commercial glass cleaner after cleaning with plain water.

Cleaning the interior windshield with water during the first three to six months of ownership will reduce tendency to fog.

Head-Up Display (HUD)

Clean the inside of the windshield to remove any dirt or film that could reduce the sharpness or clarity of the Head-Up Display (HUD) image.

Clean the Head-Up Display (HUD) lens with a soft cloth sprayed with glass cleaner. Wipe the lens gently, then dry it. See *Head-Up Display (HUD)* ⇨ *131*.

Speaker Covers

Vacuum gently around speaker covers to prevent damage. Clean spots with water and mild soap.

Coated Moldings

When cleaning coated moldings:

- When lightly soiled, wipe with a sponge or soft, lint-free cloth dampened with water.
- When heavily soiled, use warm soapy water.

Vinyl/Rubber Floor and Mats

⚠ Warning
Do not use cleaners that contain silicone, wax-based products, or cleaners that increase gloss on vinyl/rubber floor and mats. These cleaners can permanently change the appearance and feel of the vinyl/rubber and can make the floor slippery. Your foot could slip while operating the vehicle, and you could lose control, resulting in a crash. You or others could be injured.

If equipped with vinyl/rubber floor and mats, use a soft cloth and/or brush dampened with water to remove dust and loose dirt. For more thorough cleaning, use a mild soap and water solution.

Fabric/Carpet/Suede

Before cleaning, remove as much solid soils as possible, then gently vacuum the surface using a soft brush attachment. If a rotating vacuum brush attachment is used, only use it on the floor carpet.

Gently blot liquids with a paper towel. Continue blotting until no more soil can be removed.

To clean:

1. Saturate a clean, lint-free colorfast cloth with water. Microfiber cloth is recommended to prevent lint transfer to the fabric or carpet.
2. Remove excess moisture by gently wringing until water does not drip from the cleaning cloth.
3. Start on the outside edge of the soil and gently rub toward the center. Fold the cleaning cloth to a clean area frequently to prevent forcing the soil into the fabric.

NOT FOR RESALE

4. Continue gently rubbing the soiled area until there is no longer any color transfer from the soil to the cleaning cloth.
5. If the soil is not completely removed, use a mild soap solution followed only by plain water.
6. After cleaning, use a paper towel to blot excess moisture.

Stubborn stains may require a commercial upholstery cleaner or spot lifter. Test a small hidden area for colorfastness before using a commercial upholstery cleaner or spot lifter. If ring formation occurs, clean the entire fabric or carpet.

Cleaning High Gloss Surfaces, Vehicle Information, and Radio Displays

Caution

Do not attach a device with a suction cup to the display. This may cause damage and would not be covered by the vehicle warranty.

1. Use a soft bristle brush to remove any dirt from the high gloss surface/display.
2. Gently clean the surface/display with a clean microfiber cloth that has not been bleached or washed with fabric softener. Never use window cleaners or solvents. Rinse the microfiber cloth thoroughly and air dry before next use.

Instrument Panel, Leather, Vinyl, Plastic Surfaces, Low Gloss Paint Surfaces, and Natural Open Pore Wood Surfaces

Caution

Soaking or saturating leather, especially perforated leather, as well as other interior surfaces, may cause permanent damage. Wipe excess moisture from these surfaces after cleaning and allow them to dry naturally. Never use heat, steam, or spot removers. Do not use liquids that contain alcohol or solvents on leather seats. Do not use cleaners that contain silicone or wax-based products. Cleaners containing these solvents can permanently change the appearance and feel of leather or soft trim and are not recommended.

Caution

Use of air fresheners may cause permanent damage to plastics and painted surfaces. If an air freshener comes in contact with any plastic or painted surface in the vehicle, blot immediately and clean with a soft cloth dampened with a mild soap solution. Damage caused by air fresheners would not be covered by the vehicle warranty.

Use compressed air or a vacuum to remove liquid or dust under the Multi-Functional Controller cap, if equipped.

To remove dust and dirt from knobs and crevices on the instrument cluster:

1. Use a soft bristle brush.
2. Wipe with a soft microfiber cloth dampened with water. Use a mild soap and water solution for more thorough cleaning.

Do not use cleaners that increase gloss, especially on the instrument panel. Reflected glare can decrease visibility through the windshield under certain conditions.

NOT FOR RESALE

Cargo Cover and Convenience Net

If equipped, wash with warm water and mild detergent. Do not use chlorine bleach. Rinse with cold water, and then dry completely.

Care of Seat Belts

⚠ Warning

Do not bleach or dye seat belt webbing. It may severely weaken the webbing. In a crash, they might not be able to provide adequate protection. Clean and rinse seat belt webbing only with mild soap and lukewarm water. Allow the webbing to dry.

Keep belts clean and dry.

Floor Mats

⚠ Warning

If a floor mat is the wrong size or is not properly installed, it can interfere with the pedals. Interference with the pedals can cause unintended acceleration and/or

(Continued)

Warning (Continued)

increased stopping distance which can cause a crash and injury. Make sure the floor mat does not interfere with the pedals.

Proper Use:

- Use only GM-certified floor mats.
- Do not use a floor mat if the vehicle is not equipped with a floor mat retainer on the driver side floor.
- Use the floor mat with the correct side up. Do not turn it over.
- Do not place anything on top of the driver side floor mat.
- Use only a single floor mat on the driver side.

The original equipment floor mats are specially designed for your vehicle. If the floor mats need replacing, see “Removing and Replacing the Floor Mats” later in this section.

Removing and Replacing the Floor Mats

The driver side floor mat is held in place by two button-type carpet retainers.



1. Pull up on the rear of the floor mat to unlock each retainer and remove.
2. Reinstall by lining up the floor mat retainer openings over the button-type carpet retainers and snapping them into position.
3. Make sure the floor mat is properly secured in place. Verify the floor mat does not interfere with the pedals.

Cleaning Rubber Floor Mats (All-Weather Mats and Floor Liners)

See “Vinyl/Rubber Floor and Mats” under *Interior Care* ⇨ *370* for important cleaning information.

NOT FOR RESALE

Service and Maintenance

General Information
General Information 374
Maintenance Schedule
Maintenance Schedule 375
Multi-Point Vehicle Inspection (MPVI)
Multi-Point Vehicle Inspection (MPVI) 376
Owner Checks and Services
Owner Checks and Services 377
Recommended Fluids, Lubricants, and Parts
Recommended Fluids and Lubricants 378
Maintenance Records
Maintenance Records 378

General Information

⚠ Warning

Performing maintenance work can be dangerous and can cause serious injury. Perform maintenance work only if the required information, proper tools, and equipment are available. If they are not, see your dealer to have a trained technician do the work. See *Doing Your Own Service Work* ⇨ *302*.

Caution

Damage caused by improper maintenance can lead to costly repairs and may not be covered by the vehicle warranty. Maintenance intervals, checks, inspections, recommended fluids, and lubricants are important to keep the vehicle in good working condition.

Do not have chemical flushes that are not approved by GM performed on the vehicle. The use of flushes, solvents, cleaners,

(Continued)

Caution (Continued)

or lubricants that are not approved by GM could damage the vehicle, requiring expensive repairs that are not covered by the vehicle warranty.

Your vehicle is an important investment. This section describes the required maintenance for the vehicle. Follow this schedule to help protect against major repair expenses resulting from neglect or inadequate maintenance. It may also help to maintain the value of the vehicle if it is sold. It is the responsibility of the owner to have all required maintenance performed.

Your dealer has trained technicians who can perform required maintenance using genuine replacement parts. They have up-to-date tools and equipment for fast and accurate diagnostics. Many dealers have extended evening and Saturday hours, courtesy transportation, and online scheduling to assist with service needs.

Your dealer recognizes the importance of providing competitively priced maintenance and repair services. With trained technicians, the dealer is the place for routine maintenance

NOT FOR RESALE

such as tire rotations and additional maintenance items like tires, brakes, batteries, and wiper blades.

The Tire Rotation and Required Services are the responsibility of the vehicle owner. It is recommended to have your dealer perform these services every 12 000 km/7,500 mi. Proper vehicle maintenance helps to keep the vehicle in good working condition.

The Additional Required Services are for vehicles that:

- Carry passengers and cargo within recommended limits on the Tire and Loading Information label. See *Vehicle Load Limits* ⇨ *191*.
- Are driven on reasonable road surfaces within legal driving limits.

Maintenance Schedule

Rotate Tires and Perform Required Services Every 12 000 km (7,500 mi)

Tires are rotated to achieve a more uniform wear for all tires. The first rotation is the most important.

Anytime unusual wear is noticed, rotate the tires as soon as possible, check for proper tire inflation pressure, and check for damaged tires or wheels. If the unusual wear continues after the rotation, check the wheel alignment. See *When It Is Time for New Tires* ⇨ *341* and *Wheel Replacement* ⇨ *344*.

- Perform Multi-Point Vehicle Inspection. See *Multi-Point Vehicle Inspection (MPVI)* ⇨ *376*.
- Lubricate body components. See *Exterior Care* ⇨ *364*.

Additional Required Services — Normal Service

Every 36 000 km (22,500 mi)

- Replace passenger compartment air filter. Or every two years, whichever comes first. More frequent passenger compartment air filter replacement may be needed if driving in areas with heavy traffic, poor air quality, high dust levels, or environmental allergens. Passenger compartment air filter replacement may also be needed if there is reduced airflow, window fogging, or odors. Your GM dealer can help determine when to replace the filter.

Every 161 000 km (100,000 mi)

- Replace hood and/or body lift support gas struts. Or every 10 years, whichever comes first. See *Gas Strut(s)* ⇨ *315*.

Every 240 000 km (150,000 mi)

- Drain and fill vehicle coolant circuits. Or every five years, whichever comes first. See *Cooling System* ⇨ *307*.

Severe Conditions Requiring More Frequent Maintenance

- Mainly driven in heavy city traffic in hot weather.
- Mainly driven in hilly or mountainous terrain.
- Frequently towing a trailer.
- Used for high speed or competitive driving.
- Used for taxi, police, or delivery service.

Additional Required Services — Severe Service

Every 72 000 km (45,000 mi)

- Change electric drive unit fluid. See *Recommended Fluids and Lubricants* ⇨ *378*.

NOT FOR RESALE

Owner Checks and Services

Every Five Years

- Replace brake fluid every five years. See *Brake Fluid* ⇨ *310*.

Every Seven Years

- Replace Air Conditioning Desiccant every seven years. The air conditioning system requires maintenance every seven years. This service requires replacement of the desiccant to help the longevity and efficient operation of the air conditioning system. This service can be complex. See your dealer.

Multi-Point Vehicle Inspection (MPVI)

A Multi-Point Vehicle Inspection completed by a trained technician is a maintenance assessment of your vehicle. The benefit of the Multi-Point Vehicle Inspection is to identify service items that require immediate attention and those that may require attention in the future.

The technician will perform the following checks on your vehicle. You can obtain a copy of the appropriate Multi-Point Vehicle Inspection checklist on your country's GM Certified Service website. For a complete list of checks, inspections, and services, see your dealer.

Some items may not apply to your vehicle and/or region.

Diagnostics

- OnStar active, if equipped
- Service history/recall check

Exterior Lights

- Visual inspection

Windshield and Wipers

- Visual inspection

12 Volt Battery

- Battery visual inspection
- Battery test results
- Battery cables and connections

Systems, Fluids, and Visible Leak Inspection

- Electric Drive Unit
- Drive axle
- Transfer case
- Power electronics cooling system
- Windshield washer fluid

Tire Inspection

- Tire pressure, tread depth, and wear
- Rotation, if applicable
- Alignment check, optional
- Reset tire pressure monitor
- Check tire sealant expiration date, if equipped
- Check spare tire, if equipped

Brakes

- Check brake system

Visible and Functional Inspections

- Seat belt components
- Accelerator pedal
- Passenger compartment air filter, if equipped
- Hoses
- Shocks and struts
- Steering components
- Axle boots or driveshaft and u-joints

NOT FOR RESALE

- Compartment lift struts, if equipped
- Floor mats secured, no interference with pedals
- Horn
- Starter switch

Lubricate

- Chassis components

Owner Checks and Services

- At least twice a year, have underbody flushing service performed. See "Underbody Maintenance" in *Exterior Care* ⇨ *364*.

NOT FOR RESALE

Recommended Fluids, Lubricants, and Parts

Recommended Fluids and Lubricants

Fluids and lubricants identified below by name or specification, including fluids or lubricants not listed here, can be obtained from your dealer.

Usage	Fluid/Lubricant
Electric Drive Unit	DEXRON ULV Automatic Transmission Fluid.
Hydraulic Brake System	GM approved DOT 4 Hydraulic Brake Fluid.
Key Lock Cylinders, Hood and Tailgate Hinges	Multi-Purpose Lubricant, Superlube. See your dealer.
Vehicle Coolant Circuits	Use only ACDelco Premix (50/50 mixture of de-ionized water and DEX-COOL Coolant). See your dealer.
Windshield Washer	Automotive windshield washer fluid that meets regional freeze protection requirements.

Maintenance Records

After the scheduled services are performed, record the date, odometer reading, who performed the service, and the type of services performed. Retain all maintenance receipts.

NOT FOR RESALE

Technical Data

Vehicle Identification
Vehicle Identification Number (VIN) 379
Service Parts Identification 379
Vehicle Data
Capacities and Specifications 380

Vehicle Identification

Vehicle Identification Number (VIN)



This legal identifier is in the front corner of the instrument panel, on the driver side of the vehicle. It can be seen through the windshield from outside. The Vehicle Identification Number (VIN) also appears on the Vehicle Certification label and certificates of title and registration.

Service Parts Identification

The certification label provides vehicle service information to the service technician.

There may be a large barcode on the certification label on the door frame that the service technician can scan for the following information:

- Vehicle Identification Number (VIN)
- Model designation
- Paint information
- Production options

If there is not a large barcode on this label, the same information can be found on a label inside the glove box.

NOT FOR RESALE

Vehicle Data

Capacities and Specifications

The following approximate capacities are given in metric and English conversions. Refer to *Recommended Fluids and Lubricants* ⇨ *378* for more information.

Application	Capacities	
	Metric	English
Air Conditioning Refrigerant	For the air conditioning system refrigerant charge type and amount, see the refrigerant label under the hood. See your dealer for more information.	
Total Cooling System*	See your dealer.	
Wheel Nut Torque	190 N•m	140 lb ft
All capacities are approximate. When adding, be sure to fill to the approximate level, as recommended in this manual. Recheck fluid level after filling.		
*Cooling systems capacity values are based on the individual cooling system and its components. See your dealer.		

NOT FOR RESALE

Customer Information

Customer Information
Customer Satisfaction Procedure 381
California Warranty Information 383
Customer Assistance Offices 385
Customer Assistance for Text Telephone (TTY) Users 385
Online Account and Customer Support ...385
GM Mobility Reimbursement Program (U.S. Only) 386
Roadside Assistance Program 386
Scheduling Service Appointments 388
Courtesy Transportation Program 388
If a Crash Occurs 389
Collision Damage Repair 389
Publication Ordering Information 390
Radio Frequency Statement 391
Disclosures (New Mexico) 391

Reporting Safety Defects
Reporting Safety Defects to the United States Government 391
Reporting Safety Defects to the Canadian Government 392
Reporting Safety Defects to General Motors 392

Vehicle Data Recording and Privacy
Vehicle Data Recording and Privacy 392
Cybersecurity 392
Event Data Recorders 393
OnStar 393
Infotainment System 394

Customer Satisfaction Procedure

Your satisfaction and goodwill are important to your dealer and to GMC. Normally, any concerns with the sales transaction or the operation of the vehicle will be resolved by your dealer's sales or service departments. Sometimes, however, despite the best intentions of all concerned, misunderstandings can occur. If your concern has not been resolved to your satisfaction, the following steps should be taken:

STEP ONE: Discuss your concern with a member of dealership management. Normally, concerns can be quickly resolved at that level. If the matter has already been reviewed with the sales, service, or parts manager, contact the owner of your dealership or the general manager.

STEP TWO: If after contacting a member of dealership management, it appears your concern cannot be resolved by your dealership without further help, in the U.S., call 1-800-462-8782. In Canada, call General Motors of Canada Customer Care Centre at 1-800-263-3777 (English), or 1-800-263-7854 (French).

NOT FOR RESALE

We encourage you to call the toll-free number in order to give your inquiry prompt attention. Have the following information available to give the Customer Assistance representative:

- Vehicle Identification Number (VIN). This is available from the vehicle registration or title, or the plate at the top left of the instrument panel and visible through the windshield.
- Dealership name and location.
- Vehicle delivery date and present mileage.

When contacting GMC, remember that your concern will likely be resolved at a dealer's facility. That is why we suggest following Step One first.

STEP THREE — U.S. Owners: Both GM and your GM dealer are committed to making sure you are completely satisfied with your new vehicle. However, if you continue to remain unsatisfied after following the procedure outlined in Steps One and Two, you can file with the Better Business Bureau (BBB) AUTO LINE Program to enforce any additional rights you may have.

The BBB AUTO LINE Program is an out-of-court program administered by the BBB National Programs, Inc. to settle automotive disputes regarding vehicle repairs or the interpretation of the New Vehicle Limited Warranty. Although you may be required to resort to this informal dispute resolution program prior to filing a court action, use of the program is free of charge and your case will generally be heard within 40 days. If you do not agree with the decision given in your case, you may reject it and proceed with any other venue for relief available to you. When contacting the BBB AUTO LINE, you will need to provide the following information: Owner's name and address, Vehicle identification number (VIN), the Year, Make, Model, mileage of the vehicle and provide a description of the concern.

Contact the BBB AUTO LINE Program using the toll-free telephone number or write them at the following address:

BBB AUTO LINE Program
BBB National Programs, Inc.
1676 International Drive
Suite 550
McLean, VA 22102

Telephone: 1-800-955-5100
www.bbbautoline.org

This program is available in all 50 states and the District of Columbia. Eligibility is limited by vehicle age, mileage, and other factors. General Motors reserves the right to change eligibility limitations and/or discontinue its participation in this program.

STEP THREE — Canadian Owners: In the event that you do not feel your concerns have been addressed after following the procedure outlined in Steps One and Two, General Motors of Canada Company wants you to be aware of its participation in a no-charge Mediation/Arbitration Program. General Motors of Canada Company has committed to binding arbitration of owner disputes involving factory-related vehicle service claims. The program provides for the review of the facts involved by an impartial third party arbiter, and may include an informal hearing before the arbiter. The program is designed so that the entire dispute settlement process, from the time you file your complaint to the final decision, should be completed in about 70 days. We believe our impartial program offers advantages over courts in most jurisdictions because it is informal, quick, and free of charge.

For further information concerning eligibility in the Canadian Motor Vehicle Arbitration Plan (CAMVAP), call toll-free 1-800-207-0685, or call

NOT FOR RESALE

the General Motors Customer Care Centre, 1-800-263-3777 (English), 1-800-263-7854 (French), or write to:

Mediation/Arbitration Program
c/o Customer Care Centre
General Motors of Canada Company
500 Wentworth Street W
Oshawa, ON L1J 0C5

Your inquiry should be accompanied by the Vehicle Identification Number (VIN).

California Warranty Information

The Song-Beverly Consumer Warranty Act provides consumers who purchase or lease a new motor vehicle in California with certain rights if their vehicle has nonconformities that GM or its authorized repair facilities (e.g., GM dealers) are unable to repair after a reasonable number of attempts.

Applied to your vehicle, California Civil Code Section 1793.2(d) requires that, if GM or its authorized repair facilities are unable to repair a new motor vehicle to conform to the vehicle's applicable express warranties after a reasonable number of attempts, GM shall either replace the new motor vehicle or provide restitution in accordance with a statutory formula.

California Civil Code Section 1793.22(b) creates a presumption that GM has had a reasonable number of attempts to conform the vehicle to its applicable express warranties if, within 18 months from delivery to the buyer or 18,000 miles on the vehicle's odometer, whichever occurs first, one or more of the following occurs:

- The same nonconformity results in a condition that is likely to cause death or serious bodily injury if the vehicle is driven AND the nonconformity has been subject to repair two or more times by GM or its authorized repair facilities (e.g., dealers) AND the buyer or lessee has at least once directly notified GM of the need for the repair of the nonconformity by mailing such notification to the address listed below.
- The same nonconformity has been subject to repair four or more times by GM or its authorized repair facilities AND the buyer has at least once directly notified GM of the need for the repair of the nonconformity by mailing such notification to the address listed below.
- The vehicle is out of service by reason of repair nonconformities by GM or its authorized repair facilities for a cumulative total of more than 30 calendar days after delivery of the vehicle to the buyer.

If you purchased or leased a new motor vehicle in California and GM or its authorized repair facilities have been unable to repair the vehicle to conform it to applicable express warranties within a reasonable number of attempts, you may be eligible for relief under the Song-Beverly Consumer Warranty Act. You can submit a claim with the BBB AUTO LINE Program (see *Customer Satisfaction Procedure* ⇨ *381*) or you can request in writing that GM replace or repurchase your vehicle.

Notice to General Motors regarding warranty issues must be sent either by email to californiawarrantynotice@gm.com or by certified or registered mail, return receipt requested, to the following address:

California Repurchase Notice
P.O. Box 33173
Detroit, MI 48232-5173

NOT FOR RESALE

Any repurchase request must include your name, the accurate Vehicle Identification Number ("VIN") of your vehicle, a brief summary of the repair history and problems with the vehicle.

Información de garantía de California

La Ley de Garantía del Consumidor Song-Beverly brinda a los consumidores que compran o alquilan un vehículo automotor nuevo en California ciertos derechos si su vehículo presenta inconformidades que GM o sus talleres de reparación autorizadas (por ejemplo, los distribuidores de GM) no pueden reparar después de una cantidad razonable de intentos.

Aplicado a su vehículo, la Sección 1793.2(d) del Código Civil de California requiere que, si GM o sus talleres de reparación autorizadas no pueden reparar un vehículo automotor nuevo para cumplir con las garantías expresas aplicables del vehículo después de una cantidad razonable de intentos, GM deberá reemplazar el vehículo automotor nuevo o proporcionar una restitución de acuerdo con una fórmula legal.

La Sección 1793.22(b) del Código Civil de California crea una presunción de que GM ha realizado un número razonable de intentos para adaptar el vehículo a sus garantías expresas aplicables si, dentro de los 18 meses desde la entrega al comprador o 18,000 millas en el odómetro del vehículo, lo que ocurra primero, ocurre uno o más de los siguientes:

- La misma inconformidad da como resultado una condición que probablemente cause la muerte o lesiones corporales graves si se conduce el vehículo Y la inconformidad ha sido objeto de reparación dos o más veces por GM o sus talleres de reparación autorizadas (por ejemplo, distribuidores) Y el comprador o arrendatario ha notificado directamente por lo menos una vez a GM sobre la necesidad de reparar la inconformidad enviando dicha notificación por correo a la dirección que se indica a continuación.
- La misma inconformidad ha sido objeto de reparación cuatro o más veces por GM o sus talleres de reparación autorizadas Y el comprador ha notificado directamente por lo menos una vez a GM sobre la necesidad de la reparación de la inconformidad enviando dicha notificación a la dirección que se indica a continuación.
- El vehículo está fuera de servicio debido a inconformidades de reparación por parte de GM o sus talleres de reparación autorizadas por un total acumulado de más de 30 días calendario después de la entrega del vehículo al comprador.

Si compró o alquiló un vehículo automotor nuevo en California y GM o sus talleres de reparación autorizados no han podido reparar el vehículo para cumplir con las garantías expresas aplicables dentro de una cantidad razonable de intentos, puede ser elegible para recibir ayuda bajo la Ley de Garantía del Consumidor Song-Beverly. Puede presentar un reclamo ante el Programa BBB AUTO LINE (consulte el Procedimiento de satisfacción del cliente) o puede solicitar por escrito que GM reemplace o recompre su vehículo.

El aviso a General Motors sobre problemas de garantía debe enviarse por correo electrónico a californiawarrantynotice@gm.com o por correo certificado o registrado, con acuse de recibo solicitado, a la siguiente dirección:

Aviso de recompra de California
P.O. Box 33173

NOT FOR RESALE

Detroit, MI 48232-5173

La solicitud para reemplazo o recompra debe incluir su nombre, el Número de identificación del vehículo ("NIV") preciso de su vehículo, un breve resumen del historial de reparación y problemas con el vehículo.

Customer Assistance Offices

GMC is committed to assisting customers. Visit us online at www.gmc.com/support (U.S.) or www.gmccanada.ca/en/owners (Canada) to chat with us or find answers to commonly asked questions, tips, vehicle how-to instructions, and available support.

Need more help? Use the telephone numbers or mailing addresses below for additional assistance.

United States and Puerto Rico

GMC Customer Assistance Center
P.O. Box 33172
Detroit, MI 48232-5172

1-800-GMC-8782 (1-800-462-8782)

TTY: Dial 711 relay service and contact 1-800-833-2438

Roadside Assistance: 1-888-881-3302

Canada

Customer Care Centre
General Motors of Canada Company
500 Wentworth Street W
Oshawa, ON L1J 0C5

1-800-263-3777 (English)

1-800-263-7854 (French)

1-800-263-3830 (For Text Telephone Devices (TTYs))

Roadside Assistance: 1-800-268-6800

Overseas

Please contact the local General Motors Business Unit.

Customer Assistance for Text Telephone (TTY) Users

To assist customers who are deaf, hard of hearing, or speech-impaired and/or who use Text Telephones (TTYs), please dial the national 711 relay service and contact 1-800-833-2438. TTY users in Canada can dial 1-800-263-3830.

Online Account and Customer Support

Create a GMC Account (U.S.) at gmc.com

Learn more about your vehicle features, shop for and manage your connected services and OnStar plans, and access diagnostic information specific to your vehicle. Visit gmc.com and create an account today.

Membership Benefits

: Download owner's manuals and view vehicle-specific how-to videos.

: View maintenance schedules, alerts, and Vehicle Diagnostic Information. Schedule service appointments.

: View service records from your dealership and add your own.

: Select a dealer and view locations, maps, phone numbers, and hours.

: Track your vehicle warranty information.

: View active recalls by Vehicle Identification Number. See *Vehicle Identification Number (VIN)* ⇨ *379*.

NOT FOR RESALE

: Manage your profile and payment information. View your GM Rewards Card earnings and My GMC Rewards points.

: Chat live with online help representatives.

GMC Account (Canada)

Visit your GMC Account at gmccanada.ca/en (English) or gmccanada.ca/fr (French) to access similar benefits.

GM Mobility Reimbursement Program (U.S. Only)



This program is available to qualified applicants for cost reimbursement, up to certain limits, of eligible aftermarket adaptive equipment required for the vehicle, such as hand controls or a wheelchair/scooter lift for the vehicle.

To learn about the GM Mobility program, call the GM Mobility Assistance Center at 1-800-323-9935. Text Telephone (TTY) users, please dial the national 711 relay service and contact 1-800-323-9935.

Roadside Assistance Program

From the U.S., call 844-515-1418. Text Telephone (TTY) Users (U.S. Only): Contact 711 relay service and provide, 844-515-1418.

From Canada, call: 844-637-1756.

Service is available 24 hours a day, 365 days a year.

Calling for Assistance

When calling Roadside Assistance, have the following information ready:

- Your name, home address, and home telephone number
- Your mobile telephone number or the telephone number of your current location
- Location of the vehicle
- Model, year, color, and license plate number of the vehicle
- Odometer reading and Vehicle Identification Number (VIN)
- Description of the problem

Coverage

For Roadside coverage duration, see the Limited Warranty and Owner Assistance Information Manual. For questions on additional Roadside coverage, contact GMC Roadside Assistance.

In the U.S. and Canada, Roadside coverage applies only when the person operating the vehicle has the owner's permission to drive it.

Roadside Assistance is available for vehicles within the applicable Powertrain Limited Warranty coverage period or the Electric Vehicle/Hybrid Vehicle Propulsion coverage period. General Motors North America and GMC can make any changes or discontinue the Roadside Assistance program at any time without notification.

General Motors North America and GMC may choose to limit services or payment to an owner or driver if they decide the driver is making claims too often or made the same type of claim too frequently.

NOT FOR RESALE

Services Provided

- **Lock-Out Service:** Service to unlock the vehicle if you cannot open the doors. For security reasons, the driver must present identification to receive service. A remote unlock may be available if you have OnStar.
- **Tow from a Public Road or Highway:** Tow to the nearest certified GMC EV dealer for warranty service, or if a vehicle cannot drive due to a crash. If the vehicle is out of charge, Roadside will tow the vehicle to the nearest charging station or to the customer's home, whichever is closest.
- **Flat Tire Change:** Service to change a flat tire with the spare tire. The spare tire, if equipped, must be in good condition and properly inflated. If the warranty does not cover the tire, it is the owner's responsibility to repair or replace it.
- **Battery Jump Start:** Service to jump start a dead battery.
- **Trip Interruption Benefits and Assistance:** If you cannot continue your trip due to a warranty event, Roadside Assistance may reimburse incidental expenses. This includes hotels, meals, rental car, or delivering the vehicle back to the customer, up to 500 miles. Contact GMC Roadside Assistance for Trip Interruption eligibility at the time of vehicle disablement.

Services Not Included in Roadside Assistance

- Impound towing caused by violation of any laws
- Reimbursement of legal fines
- Reimbursement of police mandated laws
- Mounting, dismounting, or changing of snow tires, chains, or other traction devices
- Towing of anything attached to the vehicle like boats, campers, trailers, cargo boxes, etc.
- Vehicles stranded due to off-road driving
- Vehicles stuck in the sand, mud, or snow
- Ferry towing (Customers are responsible for the coordination and payment of any ferry involvement prior to Roadside dispatching)
- Airfare reimbursement

Roadside Assistance does not provide service if a vehicle is in an area that is not accessible to the service vehicle or is not a regularly traveled or maintained public road, which includes ice and winter roads. Customers do not receive vehicle service on restricted roadways. This includes, but are not partial to, some highways, tunnels, toll roads, toll bridges, turnpikes, and service roads.

Services Specific to Canadian-Purchased Vehicles

- **Lock-Out Service:** Requires vehicle registration.
- **Trip Interruption Benefits and Assistance:** Must be traveling 150 km from the start of the trip to qualify. Benefits and assistance require pre-authorization, original detailed receipts, and a copy of the repair orders. When the Roadside Assistance advisor receives permission, they will help to explain and plan how to receive payment. Examples of benefits and assistance include hotel, meals, and rental car.
- **Alternative Service:** The Roadside Assistance advisor may allow local emergency road service if the customer cannot receive immediate service. You will receive payment, up to $100, after sending the original receipt to Roadside Assistance. The vehicle owner is responsible for any

NOT FOR RESALE

costs for parts and labor of repairs the warranty does not cover. Coverage may also apply to mechanical failures.

Scheduling Service Appointments

If your vehicle requires service, contact your dealer and request an appointment. By scheduling a service appointment and advising the service consultant of your transportation needs, your dealer can help minimize your inconvenience. Be sure to notify your dealer of any safety-related concerns when requesting the appointment.

If you cannot schedule service immediately, keep driving the vehicle until your scheduled appointment, unless the problem is safety related.

If you are seeking a same-day repair, schedule your appointment as early in the day as possible.

Courtesy Transportation Program

GM and our participating dealers are proud to offer Courtesy Transportation. This customer support program minimizes inconvenience during warranty repairs for vehicles with the Bumper-to-Bumper (Base Warranty Coverage period in Canada), Federal Emission, Extended Powertrain, or Electric-specific warranties in both the U.S. and Canada.

Courtesy Transportation is not a part of the New Vehicle Limited Warranty. See the "Limited Warranty and Owner Assistance Information" manual for detailed new vehicle warranty coverage information.

Transportation Options

Warranty service is often completed while you wait. If not, your dealer may offer these transportation options:

Shuttle Service

One-way or round-trip shuttle service within a reasonable time and distance from your dealer.

Public Transportation, Ridesharing App, or Fuel Reimbursement

If your vehicle is kept overnight for repairs and you use public transportation or a ridesharing app, original receipts must support the expense within GM's allowed maximum to qualify for reimbursement. If U.S. customers arrange their own transportation, limited reimbursement for reasonable fuel expenses may be available. Claims should reflect actual costs and must be supported by original receipts. See your dealer for information.

Courtesy Rental Vehicle

For an overnight warranty repair, the dealer may offer a courtesy rental vehicle or reimburse rental costs. Reimbursement requires original receipts, a signed and complete rental agreement, and must meet state/provincial, local and rental vehicle provider requirements, which may include, minimum age requirements, insurance coverage, and credit card. Additional fees for fuel, rental vehicle insurance, taxes, levies, usage fees, excessive mileage, or rental usage beyond the completion of the repair are your responsibility.

A like vehicle may not be available as a courtesy rental.

Additional Program Information

Not all program options, like shuttle service, are available at every dealer. Contact your dealer for availability.

General Motors reserves the right to unilaterally modify, change, or discontinue Courtesy Transportation at any time and

NOT FOR RESALE

to resolve all questions of claim eligibility pursuant to the terms and conditions described herein at its sole discretion.

If a Crash Occurs

If there has been an injury, call emergency services for help. Do not leave the scene of a crash until all parties address the matter. Move the vehicle only if its position puts you in danger, or a police officer tells you to move it.

Give only the necessary information to police and other parties involved in the crash.

For emergency towing see *Roadside Assistance Program* ⇨ *386*.

Gather the following information:

- Driver name, address, and telephone number
- Driver license number
- Owner name, address, and telephone number
- Vehicle license plate number
- Vehicle make, model, and model year
- Vehicle Identification Number (VIN)
- Insurance company and policy number
- General description of the damage to the other vehicle

Choose a reputable repair facility that uses quality replacement parts. See "Collision Parts" in *Collision Damage Repair* ⇨ *389*.

In a crash, the sensing system may shut down the high voltage system. See *Battery - North America* ⇨ *311* for important safety information. If an airbag has inflated, see *What Will You See After an Airbag Inflates?* ⇨ *62*.

If the vehicle has damage from a crash, flood, fire, or other event it may be necessary to have the vehicle inspected. See *Battery - North America* ⇨ *311* for important safety information.

Collision Damage Repair

If the vehicle is damaged in a collision, have it repaired by a qualified technician using the proper equipment and Genuine GM Collision replacement parts. Poorly performed collision repairs diminish the vehicle resale value and safety performance.

If the vehicle is damaged from a crash, flood, fire, or other event, it may be necessary to have the vehicle inspected. See *Battery - North America* ⇨ *311* for important safety information.

Managing the Vehicle Damage Repair Process

Repair Facility

Taking an active role in the vehicle repair process is important. Choose a collision repair facility that meets your needs before you ever need collision repairs. Your dealer may have a collision repair center with GM-trained technicians and state-of-the-art equipment or be able to recommend a collision repair center that has GM-trained technicians and comparable equipment.

If you have a preferred repair facility, take the vehicle there, or have it towed there. Specify to the facility that any required replacement collision parts be original equipment parts. Remember, only Genuine GM parts are covered by the GM vehicle warranty. See "Collision Parts" later in this section.

NOT FOR RESALE

Collision Parts

Genuine GM Collision parts are new parts made with the same materials and construction methods as factory installed parts. Genuine GM Collision parts ensure that the vehicle's designed appearance, durability, and safety features are preserved. The use of Genuine GM parts can help maintain the GM New Vehicle Limited Warranty.

Recycled original equipment parts may be an acceptable choice to maintain the vehicle's appearance and safety performance; however, the history of these parts may not be known. Such parts are not covered by the GM New Vehicle Limited Warranty, and any related failures are not covered by that warranty.

Aftermarket collision parts made by companies other than GM may fit poorly, exhibit premature durability/corrosion problems, and may not perform properly in subsequent collisions. Aftermarket parts are not covered by the GM New Vehicle Limited Warranty, and any vehicle failure related to such parts is not covered by that warranty.

Insuring the Vehicle

Protect your GM vehicle with comprehensive and collision insurance coverage. There are significant differences in the quality of coverage afforded by various insurance policy terms. If the vehicle is repaired with any parts that are not GM original equipment collision parts, they will not be covered or under warranty. If such insurance coverage is not available from your current insurance carrier, consider switching to another insurance carrier.

If you are leasing your vehicle, the leasing company may require you to have insurance that ensures repairs with Genuine GM Original Equipment Manufacturer parts or Genuine Manufacturer replacement parts. Read the lease carefully, as you may be charged at the end of the lease for poor quality repairs.

Depending on your policy limits, your insurance company may initially value the repair using aftermarket parts. Discuss this with the repair professional and insist on Genuine GM parts. Remember, if the vehicle is leased, you may be obligated to have the vehicle repaired with Genuine GM parts, even if your insurance coverage does not pay the full cost.

If another party's insurance company is paying for the repairs, you are not obligated to accept a repair valuation based on that insurance company's collision policy repair limits, as you have no contractual limits with that company. In such cases, you can have control of the repair and parts choices if the cost stays within reasonable limits.

Publication Ordering Information

Service Manuals

Service manuals have the diagnosis and repair information on the engine/propulsion, transmission, axle, suspension, brakes, electrical system, steering system, body, etc.

Customer Literature

Owner’s manuals are written specifically for owners and are intended to provide basic operational information about the vehicle. The owner’s manual includes the Maintenance Schedule for all models.

Customer literature publications available for purchase include owner’s manuals, warranty manuals, and portfolios. Portfolios include an owner’s manual, warranty manual, if applicable, and zip lock bag or pouch.

NOT FOR RESALE

Current and Past Models

Service manuals and customer literature are available for many GM vehicles.

To check availability and to order, call 1-800-551-4123 Monday–Friday, 8:00 a.m.–6:00 p.m. Eastern Time

For credit card orders only (VISA, MasterCard, or Discover), see Helm, Inc. at: www.helminc.com.

To order by mail, write to:

Helm Incorporated
Attention: Customer Service
47911 Halyard Drive, Suite 200
Plymouth, MI 48170

Make checks payable in U.S. funds.

Radio Frequency Statement

This vehicle uses license-exempt transmitters / receivers / systems that operate on a radio frequency that complies with Part 15/Part 18 of the Federal Communications Commission (FCC) rules and with Innovation, Science and Economic Development (ISED) Canada's license-exempt RSS(s) / RSP-100 / ICES-GEN.

Operation is subject to the following two conditions:

1. The device may not cause harmful interference.
2. The device must accept any interference received, including interference that may cause undesired operation of the device.

Changes or modifications to any of these systems by other than an authorized service facility could void authorization to use this equipment.

Disclosures (New Mexico)



Reporting Safety Defects

Reporting Safety Defects to the United States Government

If you believe that your vehicle has a defect which could cause a crash or could cause injury or death, you should immediately inform the National Highway Traffic Safety Administration (NHTSA) in addition to notifying General Motors.

If NHTSA receives similar complaints, it may open an investigation, and if it finds that a safety defect exists in a group of vehicles, it may order a recall and remedy campaign. However, NHTSA cannot become involved in individual problems between you, your dealer, or General Motors.

To contact NHTSA, you may call the Vehicle Safety Hotline toll-free at 1-888-327-4236 (TTY: 888-275-9171); go to *https://www.safercar.gov;* or write to:

Administrator, NHTSA
1200 New Jersey Avenue, S.E.,
Washington, D.C. , 20590

NOT FOR RESALE

You can also obtain other information about motor vehicle safety from *https://www.safercar.gov*.

Reporting Safety Defects to the Canadian Government

If you live in Canada, and you believe that the vehicle has a safety defect, notify Transport Canada immediately, and notify General Motors of Canada Company. Call Transport Canada at 1-800-333-0510; go to:

www.tc.gc.ca/recalls (English)

www.tc.gc.ca/rappels (French)

or write to:

Transport Canada
Motor Vehicle Safety Directorate
Defect Investigations and Recalls Division
80 Noel Street
Gatineau , QC J8Z 0A1

Reporting Safety Defects to General Motors

In addition to notifying NHTSA (or Transport Canada) in a situation like this, notify General Motors.

In the U.S., call 1-800-462-8782, or write:

GMC Customer Assistance Center
P.O. Box 33172
Detroit, MI 48232-5172

In Canada, call 1-800-263-3777 (English) or 1-800-263-7854 (French), or write:

Customer Care Centre
General Motors of Canada Company
500 Wentworth Street W
Oshawa, ON L1J 0C5

In Mexico, call 800-466-0812 or 800-466-0801.

In other Central America and Caribbean Countries, call 52-555-901-2369.

Vehicle Data Recording and Privacy

The vehicle has a number of computers that record information about the vehicle's performance and how it is driven or used. For example, the vehicle uses computer modules to monitor and control electric drive unit performance, to monitor the conditions for airbag deployment and to deploy them in a crash, and, if equipped, to provide antilock braking to help the driver control the vehicle. These modules may store data to help the dealer technician service the vehicle or to help GM improve safety or features. Some modules may also store data about how the vehicle is operated, such as rate of energy consumption or average speed. These modules may retain personal preferences, such as radio presets, seat positions, and temperature settings.

Cybersecurity

GM collects information about the use of your vehicle including operational and safety related information. We collect this information to provide, evaluate, improve, and troubleshoot our products and services and to develop new products and services. The protection of vehicle electronics systems and customer data from unauthorized outside electronic access or control is important to GM. GM maintains appropriate security standards, practices, guidelines and controls aimed at defending the vehicle and the vehicle service ecosystem against unauthorized electronic

NOT FOR RESALE

access, detecting possible malicious activity in related networks, and responding to suspected cybersecurity incidents in a timely, coordinated and effective manner. Security incidents could impact your safety or compromise your private data. To minimize security risks, please do not connect your vehicle electronic systems to unauthorized devices or connect your vehicle to any unknown or untrusted networks (such as Bluetooth, Wi-Fi, or similar technology). In the event you suspect any security incident impacting your data or the safe operation of your vehicle, please stop operating your vehicle and contact your dealer.

Event Data Recorders

This vehicle is equipped with an Event Data Recorder (EDR). The main purpose of an EDR is to record, in certain crash or near crash-like situations, such as an air bag deployment or hitting a road obstacle, data that will assist in understanding how a vehicle's systems performed. The EDR is designed to record data related to vehicle dynamics and safety systems for a short period of time, typically 30 seconds or less. The EDR in this vehicle is designed to record such data as:

- How various systems in your vehicle were operating;
- Whether or not the driver and passenger safety belts were buckled/fastened;
- How far (if at all) the driver was depressing the accelerator and/or brake pedal; and,
- How fast the vehicle was traveling.

These data can help provide a better understanding of the circumstances in which crashes and injuries occur.

Note
EDR data are recorded by your vehicle only if a non-trivial crash situation occurs; no data are recorded by the EDR under normal driving conditions and no personal data (e.g., name, gender, age, and crash location) are recorded. However, other parties, such as law enforcement, could combine the EDR data with the type of personally identifying data routinely acquired during a crash investigation.

To read data recorded by an EDR, special equipment is required, and access to the vehicle or the EDR is needed. In addition to the vehicle manufacturer, other parties, such as law enforcement, that have the special equipment, can read the information if they have access to the vehicle or the EDR.

GM will not access these data or share it with others except: with the consent of the vehicle owner or, if the vehicle is leased, with the consent of the lessee; in response to an official request by police or similar government office; as part of GM's defense of litigation through the discovery process; or, as permitted by law. Data that GM collects or receives may also be used for GM research needs or may be made available to others for research purposes, where a need is shown and the data is not tied to a specific vehicle or vehicle owner.

OnStar

If the vehicle is equipped with OnStar and has an active service plan, additional data may be collected and transmitted through the OnStar system. This includes information about the vehicle's operation; collisions involving the vehicle; the use of the vehicle and its features, including infotainment; and the location and approximate GPS speed of the vehicle. Refer to the OnStar Terms and Conditions and Privacy Statement on the OnStar website.

See *OnStar Additional Information* ⇨ *396*.

NOT FOR RESALE

Infotainment System

If the vehicle is equipped with a navigation system as part of the infotainment system, use of the system may result in the storage of destinations, addresses, telephone numbers, and other trip information. See the infotainment section for information on stored data and for deletion instructions.

NOT FOR RESALE

OnStar

OnStar Overview
OnStar Overview 395
OnStar Services
Emergency 396
Security 396
OnStar Additional Information
OnStar Additional Information 396

OnStar Overview

This vehicle may be equipped with a comprehensive, in-vehicle system that can connect to an OnStar Advisor for Emergency, Security, Navigation, Connection, and Diagnostic Services. OnStar services may require a paid service plan and data plan. OnStar requires the vehicle battery and electrical system, cellular service, and GPS satellite signals to be available and operating. OnStar acts as a link to existing emergency service providers.

OnStar may collect information about you and your vehicle, including location information. See OnStar User Terms, Privacy Statement, and Software Terms for more details including system limitations at www.onstar.com (U.S.) or www.onstar.ca (Canada).



White OnStar Button

Blue OnStar Button

Red Emergency Button

The OnStar system status light is next to the OnStar buttons. When the status light is:

- Solid Green: the system is ready.
- Flashing Green: the system is on a call.
- Red: a problem has been detected.
- Off: the system is off. Press On twice to speak with an OnStar Advisor.

Press On or call 1-888-4ONSTAR (1-888-466-7827) to speak to an OnStar Advisor.

Press to end ongoing calls with an OnStar Advisor.

Press On to connect to the OnStar Virtual Assistant to:

- Verify account information or update contact information.
- Request driving directions.
- Request a Diagnostic check of essential operating systems.
- Request Roadside Assistance.
- Manage Wi-Fi Settings, if equipped.

NOT FOR RESALE

Press SOS to get a priority connection to an OnStar Advisor available 24/7 to:

- Request help for an emergency, severe weather, or other crisis situations, and find evacuation routes.
- Be a Good Samaritan or respond to an AMBER Alert.

OnStar Services

Emergency

Emergency Services require an active safety and security plan. With Automatic Crash Response, built-in sensors can automatically connect an OnStar Advisor into the vehicle to help.

Press SOS for a priority connection to an OnStar Advisor who can contact emergency service providers, direct them to your exact location, and relay vital information.

With OnStar Crisis Assist, specially trained OnStar Advisors are available 24 hours a day, 7 days a week, to provide a central point of contact, assistance, and information during a crisis.

With Roadside Assistance, OnStar Advisors can locate a nearby service provider to help with a flat tire or a battery jump.

Security

If equipped, OnStar provides these services:

- Stolen Vehicle Assistance: OnStar Advisors can use GPS to locate the vehicle and help authorities quickly recover it.
- Remote Ignition Block: OnStar can block the vehicle from restarting.
- Stolen Vehicle Slowdown: OnStar can work with law enforcement to gradually slow the vehicle down.

Theft Alarm Notification

When the vehicle alarm system is armed and the alarm is activated, an alert by text, email, or app push notification is sent. If the vehicle is stolen, an OnStar Advisor can work with authorities to recover the vehicle.

OnStar Additional Information

In-Vehicle Audio Messages

Audio messages may play important information at the following times:

- Prior to vehicle purchase. Press On to set up an account.
- After change in ownership.
- Periodically to verify vehicle connectivity status.

Transferring Service

Press On to request account transfer eligibility information. The OnStar Advisor can cancel or change account information.

Selling/Transferring the Vehicle

Call 1-888-4ONSTAR (1-888-466-7827) immediately to terminate your OnStar or connected services if the vehicle is disposed of, sold, transferred, or if the lease ends.

NOT FOR RESALE

Reactivation for Subsequent Owners

Press and follow the prompts to speak to an OnStar Advisor as soon as possible. The OnStar Advisor will update vehicle records and explain OnStar or connected service options.

How OnStar Service Works

Automatic Crash Response, Emergency Services, Crisis Assist, Stolen Vehicle Assistance, Remote Services, and Roadside Assistance are available on most vehicles. Not all OnStar services are available everywhere or on all vehicles. For more information, a full description of OnStar services, system limitations, and OnStar User Terms, Privacy Statement, and Software Terms:

- Call 1-888-4ONSTAR (1-888-466-7827).
- See www.onstar.com (U.S.).
- See www.onstar.ca (Canada).
- Call TTY 1-877-248-2080.
- Press to speak with an OnStar Advisor.

OnStar or connected services cannot work unless the vehicle is in a place where OnStar has an agreement with a wireless service provider for service in that area. The wireless service provider must also have coverage, network capacity, reception, and technology compatible with OnStar or connected services. Service involving location information about the vehicle cannot work unless GPS signals are available, unobstructed, and compatible with the OnStar hardware. OnStar or connected services may not work if the OnStar equipment is not properly installed or it has not been properly maintained. If equipment or software is added, connected, or modified, OnStar or connected services may not work. Other problems beyond the control of OnStar — such as hills, tall buildings, tunnels, weather, electrical system design and architecture of the vehicle, damage to the vehicle in a crash, or wireless phone network congestion or jamming — may prevent service.

Services for People with Disabilities

OnStar Advisors provide services to help with physical disabilities and medical conditions.

Press to help:

- Find a hotel, restaurant, etc., that meets accessibility needs.
- Provide directions to the closest hospital or pharmacy in urgent situations.

TTY Users

OnStar has the ability to communicate to deaf, hard-of-hearing, or speech-impaired customers while in the vehicle. If equipped, the TTY system provides in-vehicle access to all OnStar services, except OnStar Turn-by-Turn Navigation.

Turn your vehicle on and keep it in P (Park). From the infotainment apps screen, access TTY by touching Settings > Apps > Phone > TTY > Enable OnStar TTY mode. When TTY mode is active, you can make and receive phone calls using the infotainment display.

OnStar Personal Identification Number (PIN)

A PIN is needed to access some OnStar services. The PIN will need to be changed the first time when speaking with an OnStar Advisor. To change the OnStar PIN, contact an OnStar Advisor by pressing or calling 1-888-4ONSTAR.

Warranty

OnStar equipment may be warranted as part of the vehicle warranty.

NOT FOR RESALE

Languages

The vehicle can be programmed to respond in multiple languages. Press and ask for an OnStar Advisor. OnStar Advisors are available in English, Spanish, and French. Available languages may vary by country.

Potential Issues

OnStar cannot perform Remote Door Unlock or Stolen Vehicle Assistance after the vehicle has been off continuously for an extended period of time without being started. To find out the duration of time that applies for the vehicle, contact an OnStar Advisor by pressing or calling 1-888-4ONSTAR. If the vehicle has not been started for an extended period of time, OnStar can contact Roadside Assistance or a locksmith to help gain access to the vehicle.

Global Positioning System (GPS)

- Obstruction of the GPS can occur in a large city with tall buildings; in parking garages; around airports; in tunnels and underpasses; or in an area with very dense trees. If GPS signals are not available, the OnStar system should still operate to call OnStar. However, OnStar could have difficulty identifying the exact location.
- In emergency situations, OnStar can use the last stored GPS location to send to emergency responders.

A temporary loss of GPS can cause loss of the ability to send a Turn-by-Turn Navigation route. The OnStar Advisor may give a verbal route or may ask for a call back after the vehicle is driven into an area with greater access to GPS signal.

Cellular and GPS Antennas

Cellular reception is required for OnStar to send remote signals to the vehicle. Do not place items over or near the antenna to prevent blocking cellular and GPS signal reception.

Unable to Connect to OnStar Message

If there is limited cellular coverage or the cellular network has reached maximum capacity, this message may come on. Press to try the call again or try again after driving a few miles into another cellular area.

Vehicle and Power Issues

OnStar services require a vehicle electrical system, wireless service, and GPS satellite technologies to be available and operating for features to function properly. These systems may not operate if the battery is discharged or disconnected.

Add-on Electrical Equipment

The OnStar system is integrated into the electrical architecture of the vehicle. Do not add any electrical equipment. See *Add-On Electrical Equipment* ⇨ *299*. Added electrical equipment may interfere with the operation of the OnStar system and cause it to not operate.

Vehicle Software Updates

OnStar or GM may remotely deliver software updates or changes to the vehicle without further notice or consent. These updates or changes may enhance or maintain safety, security, or the operation of the vehicle or the vehicle systems. Software updates or changes may affect or erase data or settings that are stored in the vehicle, such as saved navigation destinations or pre-set radio stations. Neither OnStar nor GM is responsible for any affected or erased data or settings. These updates or changes may also collect personal information. Such collection is described in the OnStar Privacy Statement or separately disclosed at the time of installation. These updates

NOT FOR RESALE

or changes may also cause a system to automatically communicate with GM servers to collect information about vehicle system status, identify whether updates or changes are available, or deliver updates or changes. An active OnStar agreement constitutes consent to these software updates or changes and agreement that either OnStar or GM may remotely deliver them to the vehicle.

Connected Services Privacy Statement

The complete OnStar Privacy Statement may be found at www.onstar.com (U.S.), or www.onstar.ca (Canada). We recommend that you review it. If you have any questions, call 1-888-4ONSTAR (1-888-466-7827) or press  to speak with an OnStar Advisor. Users of wireless communications are cautioned that the privacy of any information sent via wireless cellular communications cannot be assured. Third parties may unlawfully intercept or access transmissions and private communications without consent.

OnStar – Software Acknowledgements

To obtain the source code under GPL, LGPL, MPL, and other open source licenses, that is contained in this product, please visit www.opensourceautomotive.com/an/GM. In addition to the source code, all referred license terms, warranty disclaimers, and copyright notices are available for download. This offer is valid for a period of three years after our last shipment of this product. This offer is valid to anyone in receipt of this information.

*Provided through Aumovio, Inc., who is solely responsible for provisions of related OSS compliance.

NOT FOR RESALE

Connected Services

Connected Services
Navigation 400
Connections 400
Diagnostics 401

Vehicle Updates
How Your Vehicle is Updated 402
Vehicle Update Additional Information .. 402

Navigation

Connected navigation services enable you to use the vehicle's mobile app or an OnStar Advisor to get route guidance.

If equipped, you can send destinations from the myGMC mobile app to the Turn-by-Turn or built-in navigation system.

An active OnStar or connected services plan is required. Services vary by model. Map coverage is available in the United States (www.onstar.com) and Canada (www.onstar.ca).

Turn-by-Turn Navigation

OnStar Turn-by-Turn Navigation provides voice-guided driving directions using GPS technology.

To get directions, push the Blue OnStar button and request Turn-by-Turn directions. The OnStar Virtual Assistant will send detailed directions to the Turn-by-Turn Navigation system.

Automated voice-guided directions will take you to your set destination.

If you are in an area where Turn-by-Turn is not available, push to speak to an OnStar Advisor. The OnStar Advisor will be able to give real-time navigation instructions.

Destination Download

If equipped, OnStar can send directions to the vehicle's built-in navigation system. Press , then ask the OnStar Virtual Assistant to download directions to the built-in navigation system.

After the navigation session is downloaded, the navigation screen will provide prompts to begin driving directions.

Downloaded routes can only be canceled through the built-in navigation system.

Connections

The following services allow you to monitor your vehicle status, manage your vehicle Wi-Fi services, and safeguard your personal data.

For coverage maps, see www.onstar.com (U.S.) or www.onstar.ca (Canada).

NOT FOR RESALE

Wi-Fi Hotspot

If equipped, the built-in Wi-Fi hotspot provides 5G access to in-vehicle experiences such as navigation apps, voice assistance, audio and visual HD streaming apps in select vehicles. Multiple devices can be connected. A data plan is required.

Only use the in-vehicle controls when it is safe to do so. See *Distracted Driving* ⇨ *178*

To retrieve Wi-Fi hotspot information, select the Wi-Fi Hotspot icon on the infotainment app screen.

The Wi-Fi settings will display:

- The Wi-Fi Hotspot name (Service Set Identifier) and password.
- The connection type (no Internet connection, 4G, 4G LTE, 5G) and signal quality (poor, good, excellent), if equipped.

The connection type icon may not illuminate even though the vehicle has an active connection.

Connect with an OnStar Advisor to edit the Wi-Fi hotspot name or password. See *OnStar Overview* ⇨ *395*. On some vehicles, you can edit the Wi-Fi hotspot name and password in the Wi-Fi Hotspot menu.

After initial setup, your vehicle's Wi-Fi hotspot will connect automatically to your mobile devices.

Manage data usage by turning Wi-Fi on or off on your mobile device, using the myGMC mobile app, or by contacting an OnStar Advisor.

myGMC App

To remotely connect to your vehicle, download the myGMC mobile app to a compatible Apple or Android device. For specific app features, see my.gmc.com.

To use the app, you will need:

- An active OnStar or connected services plan.
- A compatible mobile device.
- Factory-installed remote start and power door locks.

Data rates apply.

See www.gmc.com or www.onstar.com for details and system limitations.

Security Best Practices

To protect your personal data:

- Change the default password for the myGMC mobile app. Use a combination of letters and numbers to increase the security.
- Change the Wi-Fi hotspot name (Service Set Identifier) and password. The Service Set Identifier is your network's name that is visible to other wireless devices. Choose a unique name and avoid family names or vehicle descriptions.

Diagnostics

OnStar's Vehicle Diagnostics

If equipped and enabled, OnStar's Vehicle Diagnostics monitors and reports on the health of your vehicle's central operating systems. Capabilities vary by model. See www.onstar.com (U.S.) or www.onstar.ca (Canada) for details and system limitations.

myGMC App

You can remotely check your vehicle status through the myGMC app.

NOT FOR RESALE

Features are subject to change. For updates on feature capabilities, see www.gmc.com/owners. Message and data rates may apply.

Vehicle Updates

How Your Vehicle is Updated

If equipped, the vehicle can download and install select software updates over a wireless connection. The system will prompt for certain updates to be downloaded and/or installed.

To manually check for updates, select Settings > Updates. Follow the on-screen prompts to download and/or install the update. The steps to check for, download, and install updates may vary by vehicle.

During the software download, the vehicle can be used normally. Once the download is complete, the vehicle may prompt you to install when shifting into P (Park).

During the software installation, the vehicle will be disabled and cannot be driven. The system will show the installation progress and will notify you of success or failure once the installation is complete.

Your vehicle must be connected to the internet to download Over-the-Air vehicle software updates, which can be accessed through the vehicle's built-in internet connection. If required, data plans are provided by a third party. A secure Wi-Fi hotspot such as a compatible mobile, home, or public hotspot can be used. Applicable data rates may apply.

To connect the infotainment system to a secured hotspot, select Settings > Connections > Wi-Fi Networks. Select the appropriate Wi-Fi network and follow the on-screen prompts.

Download speeds may vary. On most compatible mobile devices, activation of the Wi-Fi hotspot is in the Settings menu under Mobile Network Sharing, Personal Hotspot, Mobile Hotspot, or similar. Availability of Over-the-Air software updates varies by vehicle and country. Features are subject to change.

For more information on this feature, see *Online Account and Customer Support* ⇨ *385*.

Vehicle Update Additional Information

If you have accepted the terms and conditions and have an active connected services package for your vehicle, GM may remotely deliver software updates or changes to the vehicle without further notice or consent. These updates or changes may enhance or maintain safety, security, or the operation of the vehicle or the vehicle systems. Software updates or changes may affect or erase data or settings that are stored in the vehicle, such as saved navigation destinations or pre-set radio stations. GM is not responsible for any affected or erased data or settings. These updates or changes may also collect personal information. Such collection is described in the privacy statement or separately disclosed at the time of installation. These updates or changes may also cause a system to automatically communicate with GM servers to collect information about vehicle system status, identify whether updates or changes are available, or deliver updates or changes. An active connectivity agreement constitutes consent to these software updates or changes and agreement that GM may remotely deliver them to the vehicle.

NOT FOR RESALE

Data Download

If the vehicle is equipped with and has an active connected services plan, additional data may be collected through the connected services system. This includes information about: the vehicle's operation, a crash involving the vehicle, the use of the vehicle and its features, and, in certain situations, the location and approximate GPS speed of the vehicle. Refer to the Terms and Conditions and Privacy Statement on the website. See www.gmc.com.

Wireless Configuration

Export of this vehicle to another region may require reset of internal settings for wireless communication configuration to ensure regulatory compliance or enable connectivity. See your dealer. The end-user of the device does not have an option to modify the regulatory wireless configuration.

NOT FOR RESALE

Index

A

Accessories and Modifications..... 302
AC Charging..... 283
Adaptive
  Cruise Control..... 121, 214
Additional
  OnStar Information..... 396
Add-On Electrical Equipment..... 299
Advanced
  Driver Assistance Systems..... 254
Agreements
  Trademarks and License..... 168
Aiming
  Headlight, Front..... 316
Air
  Filter, Passenger Compartment..... 174
  Suspension..... 211
  Suspension Light..... 119
  Vents..... 173
Airbags
  Adding Equipment to the Vehicle..... 67
  How Does an Airbag Restrain?..... 61
  Passenger Sensing System..... 63
  Passenger Status Indicator..... 112
  Readiness Light..... 112
  Replacing System Parts after a Crash..... 68
  Servicing Airbag-Equipped Vehicles..... 66
  System..... 58
  System Check..... 67
  What Makes an Airbag Inflate?..... 61
  What Will You See after an Airbag Inflates?..... 62
  When Should an Airbag Inflate?..... 60
  Where Are the Airbags?..... 59
Alarm
  Vehicle Security..... 29
Alert
  Blind Zone Steering Assist (BZSA)..... 275
  Lane Change (LCA)..... 273
  Rear Cross Traffic..... 264
  Rear Pedestrian..... 263
All-Season Tires..... 329
All-Terrain Tires..... 330
Ambient Lighting..... 143
AM-FM Radio..... 148
Anchor Points
  Cargo..... 96
Antenna
  Multi-band..... 151
Antilock Brake System (ABS)..... 202
  Warning Light..... 115
Appearance Care
  Exterior..... 364
  Interior..... 370
Apps
  Off-Road..... 186

NOT FOR RESALE

Assistance
Program, Roadside... 386
Assistance Systems
Advanced... 254
Automatic Emergency Braking (AEB)... 267
Automatic Parking Assist (APA)... 260
Blind Zone Steering (BZSA)... 275
Driver Attention... 277
Driving... 265
Forward Collision Alert (FCA) System... 265
Front Pedestrian Braking (FPB)... 271
Lane Change Alert (LCA)... 273
Lane Keep Assist (LKA)... 279
Parking... 259
Parking and Backing... 255
Rear Cross Traffic Alert (RCTA)... 264
Rear Pedestrian Alert... 263
Rear Vision Camera (RVC)... 255
Reverse Automatic Braking (RAB)... 262
Surround Vision Recorder... 280
Surround Vision System... 256
Traffic Sign... 276
Assistant, Voice... 155
Audio
Bluetooth... 151
Automatic
Dimming Mirrors... 32
Door Locks... 15
Emergency Braking (AEB) Disabled Light... 117
Parking Assist (APA)... 260
Vehicle Hold (AVH)... 204
Auxiliary
Switches... 300
Avoiding Untrusted Media Devices... 151

B

Battery
Charging Electrical Requirements... 298
Exterior Lighting Battery Saver... 144
Fault Light... 114
Gauge... 109
Jump Starting... 360
Load Management... 144
Power Protection... 144
Battery - North America... 311
Blade Replacement, Wiper... 314
Bluetooth
Audio... 151
Overview... 157, 158
Brakes... 309
Antilock... 202
Brake Assist... 203
Electric Brake Boost... 202
Electric Parking Brake... 202
Fluid... 310
Regenerative Braking... 204
System Warning Light... 114
Braking... 179
Automatic Emergency (AEB)... 267
Front Pedestrian (FPB) System... 271
Post-Collision... 204
Reverse Automatic... 262
Break-In, New Vehicle... 195
Buckle To Drive... 51
Buying New Tires... 341

C

California
Perchlorate Materials Requirements... 302
Proposition 65 Warning... 1
Warranty Information... 383
Camera
Rear Vision (RVC)... 255
Canadian Vehicle Owners... 2
Capacities and Specifications... 380
Carbon Monoxide
Midgate... 21
Tailgate... 25
Winter Driving... 190
Cargo
Anchor Points... 96
Area... 95
Lights, Exterior... 141
Car Wash Mode... 197

NOT FOR RESALE

Caution, Danger, and Warning..... 2
Chains and Other Traction Devices
Tire..... 345
Charge
Cord..... 113, 290, 293, 297
Charging..... 122
AC..... 283
DC..... 284
Delay Override..... 286
Plug-In..... 282
Status Feedback..... 287
System Light..... 113
Utility Interruption..... 298
When to Charge, Vehicle..... 281
Charging Phone
Wireless..... 105
Child Restraints
Infants and Young Children..... 70
Lower Anchors and Tethers for Children..... 75
Older Children..... 68
Securing..... 85, 89
Systems..... 72
Where to Put..... 74
Child Safety Locks..... 15
Circuit Breakers..... 318
Cleaning
Exterior Care..... 364
Interior Care..... 370
Climate Control Systems
Dual Automatic..... 171
Clock..... 101
Setting..... 162
Cluster, Instrument..... 108
Collision Alert
Forward (FCA) System..... 265
Collision Damage Repair..... 389
Compartment
Underhood..... 305
Compartments
Storage..... 92
Compressor Kit, Tire Sealant..... 347
Connected Services
Connections..... 400
Diagnostics..... 401
Navigation..... 400
Connections
Connected Services..... 400
Control
of a Vehicle..... 179
Traction and Electronic Stability..... 205
Controls
Headlight..... 137
On-Screen..... 107
Steering Wheel..... 146
Cooling System..... 307
Cornering Lights..... 141
Courtesy Transportation Program..... 388
Covers
Underhood Access..... 304
Cruise Control
Adaptive..... 214
Light..... 121
Super..... 238
Cupholders..... 92
Customer Assistance
Offices..... 385
Text Telephone (TTY) Users..... 385
Customer Information
Publications Ordering Information..... 390
Customer Satisfaction Procedure..... 381
Customer Support
and Online Account..... 385
Cybersecurity..... 392

D

Damage Repair, Collision..... 389
Danger, Warning, and Caution..... 2
Dashboard..... 5
Data Collection
Infotainment System..... 394
OnStar..... 393
Data Recorders, Event..... 393
Daytime Running Lights..... 139
DC Charging..... 284
Defensive Driving..... 179

NOT FOR RESALE

Delayed
Charging Override... 286
Locking... 15
Destination... 153
Diagnostics
Connected Services... 401
Digital
Key... 16
Disabled Vehicle
Transporting... 363
Disclosures... 391
Distracted Driving... 178
Dome Lights... 142
Door
Ajar Light... 122
Delayed Locking... 15
Locks... 13
Power Locks... 15
Driver
Assistance Systems, Advanced... 254
Attention Assist... 277
Information Center (DIC)... 127
Mode Control... 207
Mode Control Light... 118
Teen... 165
Drive Unit
Electric... 197
Driving
Assistance Systems... 265
Defensive... 179
for Better Energy Efficiency... 177
Hill and Mountain Roads... 189
If the Vehicle is Stuck... 190
Impaired... 179
Loss of Control... 181
Off-Road... 182
Off-Road Recovery... 181
One-Pedal... 200
Vehicle Load Limits... 191
Wet Roads... 188
Winter... 190
Dual
Automatic Climate Control System... 171

E

Electric
Brake Boost... 202
Drive Unit... 197
Parking Brake... 202
Parking Brake Light... 115
Electrical
Equipment, Add-On... 299
Requirements for Battery Charging... 298
Electrical System
Fuses and Circuit Breakers... 318
Instrument Panel Fuse Block... 323, 325
Overload... 317
Electronic Stability Control (ESC) Off
Light... 118
Emergency
OnStar... 396
Energy Efficiency
Driving... 177
Engine
Cooling System... 307
Entry Lighting... 143
Event Data Recorders... 393
Exit Lighting... 143
Extender, Seat Belt... 57
Exterior
Lighting Battery Saver... 144

F

Flashers, Hazard Warning... 140
Flat Tire... 346
Changing... 353
Floor Console
Storage... 94
Floor Mats... 373
Fluid
Brakes... 310
Washer... 309
Fog
Lights... 121, 141
Folding Mirrors... 32

NOT FOR RESALE

Four-Wheel
Steering... 209
Steering Light... 119
Four-Wheel Drive... 201
Four-Wheel Drive Service Warning Light... 116
Frequency Statement
Radio... 391
Front
Seats, Adjustment... 41
Full-Size Spare Tire... 360
Fuses
Fuses and Circuit Breakers... 318
Instrument Panel Fuse Block... 323, 325
Underhood Compartment... 319

G

Garage Door Opener
Programming... 133
Gas Strut(s)... 315
Gauges
Battery... 109
Odometer... 109
Power Indicator... 110
Speedometer... 109
Trip Odometer... 109
Warning Lights and Indicators... 107
General Information
Service and Maintenance... 374
Towing... 299
Vehicle Care... 302
Generator
Onboard... 103
Glass Replacement... 315
Global Positioning System (GPS)... 154
Glove Box... 92
GM Mobility Reimbursement Program... 386
Guidance
Problems with the Route... 155

H

Hands-On Steering Assist... 226
Hands-On Steering Assist Light... 116
Hazard Warning Flashers... 140
Headlights
Aiming, Front... 316
Controls... 137
High-Beam On Light... 121
Off Reminder... 139
System, Automatic... 139
Head Restraints... 39
Head-Up Display (HUD)... 131
Heated
and Ventilated Front Seats... 46
Mirrors... 32
Rear Seats... 50
Steering Wheel... 99
High-Beam
On Light... 121
Systems... 138
High-Speed Operation... 334
High Voltage
Battery Gauge... 109
Devices and Wiring... 316
Hill
and Mountain Roads... 189
Start Assist (HSA)... 204
Hood... 18
Horn... 100
How to Wear Seat Belts Properly... 52
How Your Vehicle is Updated... 402

I

If a Crash Occurs... 389
Immobilizer Operation... 30
Indicators
Pedestrian Ahead... 117
Vehicle Ahead... 117
Warning Lights and Gauges... 107
Infants and Young Children, Restraints... 70
Information
Publication Ordering... 390
Infotainment
Using the System... 147
Inspection
Multi-Point Vehicle... 376

NOT FOR RESALE

Installing and Operating the Charge Cord... 293
Instrument Cluster... 108
Instrument Panel Overview... 5
Interior Rearview Mirrors... 33
Introduction... 2, 145

J

Jump Starting... 360

K

Keys... 7
Digital... 16
Remote... 8
Remote Operation... 8

L

Labeling, Tire Sidewall... 330
Lane Keep Assist Light... 116
Lap-Shoulder Belt... 54
LATCH System Replacing Parts after a Crash... 85
LED Lighting... 316
Lighting Ambient... 143
Entry... 143
Exit... 143
Illumination Control... 142
LED... 316
Lights Adaptive Cruise Control... 121
Air Suspension... 119
Airbag Readiness... 112
Antilock Brake System (ABS) Warning... 115
Automatic Emergency Braking (AEB) Disabled... 117
Automatic Vehicle Hold (AVH)... 116
Battery Fault... 114
Brake System Warning... 114
Charge Cord Connected... 113
Charging System... 113
Cornering... 141
Cruise Control Light... 121
Daytime Running... 139
Dome... 142
Door Ajar... 122
Driver Mode Control... 118
Electric Parking Brake... 115
Electronic Stability Control (ESC), Off... 118
Exterior Cargo... 141
Exterior Lighting Battery Saver... 144
Fog... 141
Four-Wheel Steering... 119
Front Fog Indicator... 121
Gauges and Indicators... 107
Hands-On Steering Assist... 116
High-Beam On... 121
Lane Keep Assist... 116
Low State of Charge... 113
On Reminder... 121
Reading... 142
Seat Belt Reminders... 111
Security... 120
Service Electric Parking Brake... 115
Service Four-Wheel Drive Warning Light... 116
Service Vehicle Soon... 114
Super Cruise... 122
Tire Pressure... 120
Traction Control System (TCS)/ Electronic Stability Control Light... 118
Traction Off... 117
Vehicle Ready... 120
Locks Automatic Door... 15
Delayed Locking... 15
Door... 13
Lockout Protection... 15
Power Door... 15
Safety... 15
Loss of Control... 181

NOT FOR RESALE

Lower Anchors and Tethers for Children (LATCH System)... 75
Low State of Charge Light... 113
Lumbar Adjustment
Front Seats... 43

M

Maintenance
Recommended Fluids and Lubricants... 378
Records... 378
Schedule... 375
Maps... 152
Media
Avoiding Untrusted Devices... 151
Memory Seats... 44
Messages
Propulsion Power... 133
Vehicle... 132
Vehicle Speed... 133
Midgate... 21
Mirrors
Automatic Dimming... 32
Automatic Dimming Rearview... 33
Folding... 32
Heated... 32
Interior Rearview... 33
Manual Rearview... 33
Power... 31
Rear Camera... 33
Tilt in Reverse... 33
Modes
Car Wash... 197
Driver Control... 207
Power... 196
Monitor System, Tire Pressure... 335
Multi-band Antenna... 151
Multi-Point Vehicle Inspection (MPVI)... 376

N

Navigation
Connected Services... 400
Destination... 153
Symbols... 153
Using the System... 152
New Vehicle Break-In... 195

O

Odometer... 109
Trip... 109
Off-Road
App... 186
Driving... 182
Recovery... 181
Older Children, Restraints... 68
Onboard Generator... 103
One-Pedal Driving... 200
Online Account and Customer Support... 385
On-Screen Controls... 107
OnStar... 393
Additional Information... 396
Emergency... 396
Overview... 395
Security... 396
Outlets
Power... 101
Overview... 146
Instrument Panel... 5
Owner Checks and Services... 377

P

Park
Assist... 255, 259
Parking
Brake and P (Park) Mechanism Check... 314
Parking Assist
Automatic... 260
Parking or Backing
Assistance Systems... 255
Passenger
Airbag Status Indicator... 112
Compartment Air Filter... 174
Sensing System... 63
Pedestrian
Ahead Indicator... 117
Safety Signal... 100

NOT FOR RESALE

Perchlorate Materials Requirements, California... 302
Phone
Bluetooth... 157, 158
Plug-In Charging... 282
Port
USB... 151
Post-Collision Braking... 204
Power
Door Locks... 15
Indicator Gauge... 110
Mirrors... 31
Modes... 196
Outlets... 101
Protection, Battery... 144
Seat Adjustment... 41
Windows... 35
Pregnancy, Using Seat Belts... 56
Privacy
Vehicle Data Recording... 392
Problems with Route Guidance... 155
Program
Courtesy Transportation... 388
Proposition 65 Warning
California... 1
Propulsion
Power Messages... 133
Publication Ordering Information... 390

Q

Québec Consumer Protection Act Disclosure (Québec Customers Only)... 2

R

Radiator... 307
Radio
AM-FM Radio... 148
Frequency Statement... 391
Reception... 150
Satellite... 149
Reading Lights... 142
Ready Indicator... 120
Rear
Camera Mirror... 33
Heated Seats... 50
Seat Reminder... 47
Seats... 48
Rearview Mirrors... 33
Automatic Dimming... 33
Reclining Seatbacks... 42
Recommended
Fluids and Lubricants... 378
Recorder
Surround Vision... 280
Records
Maintenance... 378
Recreational Vehicle Towing... 364
Regenerative Braking... 204
Reimbursement Program, GM Mobility... 386
Reminder
Headlights Off... 139
Lights On... 121
Seat Belt... 111
Remote
Key... 8
Key Operation... 8
Start... 13
Replacement
Glass... 315
Replacement Parts
Airbags... 68
Replacing
Airbag System... 68
LATCH System Parts After a Crash... 85
Seat Belt System Parts after a Crash... 58
Reporting Safety Defects
Canadian Government... 392
General Motors... 392
U.S. Government... 391
Requirements
Electrical Battery Charging... 298
Reverse Tilt Mirrors... 33
Ride Control Systems
Air Suspension... 211
Roads
Driving, Wet... 188

NOT FOR RESALE

Roadside Assistance Program..... 386
Rotation
Monitor, Tires..... 339
Tires..... 340

S

Safety
Locks..... 15
Pedestrian Signal..... 100
System Check..... 57
Safety Defects Reporting
Canadian Government..... 392
General Motors..... 392
U.S. Government..... 391
Satellite Radio..... 149
Scheduling Appointments..... 388
Sealant Kit, Tire..... 347
Seat Belts..... 50
Buckle To Drive..... 51
Care..... 57
Extender..... 57
How to Wear Seat Belts Properly..... 52
Lap-Shoulder Belt..... 54
Reminders..... 111
Replacing after a Crash..... 58
Use During Pregnancy..... 56
Seats
Adjustment, Front..... 41
Head Restraints..... 39
Heated and Ventilated, Front..... 46
Heated, Rear..... 50
Lumbar Adjustment, Front..... 43
Memory..... 44
Power Adjustment, Front..... 41
Rear..... 48
Rear Seat Reminder..... 47
Reclining Seatbacks..... 42
Underseat Storage..... 93
Secondary Collision Mitigation Braking..... 204
Securing Child Restraints..... 85, 89
Security
Light..... 120
OnStar..... 396
Vehicle..... 29
Vehicle Alarm..... 29
Service..... 175
Maintenance Records..... 378
Accessories and Modifications..... 302
Doing Your Own Work..... 302
Electric Parking Brake Light..... 115
Four-Wheel Drive Warning Light..... 116
Maintenance, General Information..... 374
Parts Identification..... 379
Scheduling Appointments..... 388
Vehicle Soon Light..... 114
Servicing the Airbag System..... 66
Settings..... 162
Signals, Turn and Lane-Change..... 140
Specifications and Capacities..... 380
Speedometer..... 109
Start
Assist, Hill..... 204
Remote..... 13
Status
Charging Feedback..... 287
Vehicle..... 129
Steering..... 180
Four-Wheel..... 209
Hands-On Assist..... 226
Heated Wheel..... 99
Wheel Adjustment..... 99
Wheel Controls..... 146
Storage
Cargo Area..... 95
Compartments..... 92
Cupholders..... 92
Floor Console..... 94
Glove Box..... 92
Underhood..... 92
Underseat..... 93
Storing the Tire Sealant and
Compressor Kit..... 353
Struts
Gas..... 315
Stuck Vehicle..... 190
Sun Visors..... 37

NOT FOR RESALE

Super Cruise..... 238
Light..... 122
Surround
Vision System..... 256
Switches
Auxiliary..... 300
Symbols..... 3
Navigation..... 153
System
Global Positioning..... 154
Systems
Airbag..... 58
High Beam..... 138
Infotainment, Data Recording..... 394

T

Tailgate..... 25
Teen Driver..... 165
Text Telephone (TTY) Users..... 385
Theft-Deterrent Systems..... 30
Tires..... 328
All-Season..... 329
All-Terrain..... 330
Buying New Tires..... 341
Chains and Other Traction Devices..... 345
Changing..... 353
Designations..... 331
Different Size..... 343
Full-Size Spare..... 360
If a Tire Goes Flat..... 346
Inspection..... 339
Pressure..... 333, 334
Pressure Light..... 120
Pressure Monitor Operation..... 335
Pressure Monitor System..... 335
Rotation..... 340
Rotation Monitor..... 339
Sealant and Compressor Kit..... 347
Sealant and Compressor Kit, Storing..... 353
Sidewall Labeling..... 330
Terminology and Definitions..... 332
Uniform Tire Quality Grading..... 343
Wheel Alignment and Tire Balance..... 344
Wheel Replacement..... 344
When It Is Time for New Tires..... 341
Winter..... 329
Towing
General Information..... 299
Recreational Vehicle..... 364
Traction
Control System (TCS)/Electronic Stability Control Light..... 118
Control/Electronic Stability Control..... 205
Off Light..... 117
Trademarks and License Agreements..... 168
Traffic
Sign Assistant..... 276
Transfer Case
Four-Wheel Drive..... 201
Transportation Program, Courtesy..... 388
Transporting
a Disabled Vehicle..... 363
Trip Odometer..... 109
Troubleshooting and Maintenance
Charge Cord..... 297
Truck-Camper Loading Information..... 195
TTY Users
Customer Assistance..... 385
Turn and Lane-Change Signals..... 140

U

Underhood
Access Covers..... 304
Compartment Fuse Block..... 319
Compartment Overview..... 305
Storage..... 92
Uniform Tire Quality Grading..... 343
Universal Remote System
Operation..... 135
Programming..... 133
Updates
How Your Vehicle is Updated..... 402
Vehicle Update Additional Information..... 402
USB Port..... 151

NOT FOR RESALE

Using
Infotainment System... 147
Navigation System... 152
Utility Interruption of Charging... 298

V

Vehicle
Ahead Indicator... 117
Alarm System... 29
Automatic Hold... 204
Automatic Hold Light... 116
Canadian Owners... 2
Control... 179
Data Recording and Privacy... 392
Identification Number (VIN)... 379
Load Limits... 191
Messages... 132
Positioning... 154
Ready Light... 120
Security... 29
Service Soon Light... 114
Speed Messages... 133
Status... 129
Symbols... 3
When to Charge... 281
Vehicle Care
Storing the Tire Sealant and Compressor Kit... 353
Tire Pressure... 333
Vehicle Update
Additional Information... 402
Ventilation, Air... 173
Visors... 37
Voice
Assistant... 155

W

Warning
Brake System Light... 114
Caution and Danger... 2
Hazard Flashers... 140
Lights, Gauges, and Indicators... 107
Warranty Information
California... 383
Washer Fluid... 309
Wheels
Alignment and Tire Balance... 344
Different Size... 343
Replacement... 344
Where to Put the Restraint... 74
Windows... 35
Power... 35
Windshield
Replacement... 315
Wiper/Washer... 100
Winter
Driving... 190
Tires... 329
Wiper
Blade Replacement... 314
Wireless Phone Charging... 105
Wiring, High Voltage Devices... 316

Scan to Access

United States



Owner's Manuals
Warranty Information
Reference Guides
Links to GM Brand Websites
Many Additional Resources

Canada



Connected Services
1-888-4-ONSTAR

85842663 A