
GMC
2027
Sierra/Sierra Denali 1500
Owner's Manual

NOT FOR RESALE

Contents

Introduction 1
Keys, Doors, and Windows 13
Seats and Restraints 45
Storage 99
Instruments and Controls 105
Lighting 140
Infotainment System 149
Climate Controls 180
Driving and Operating 188
Vehicle Care 320
Service and Maintenance 411
Technical Data 419
Customer Information 424
Reporting Safety Defects 434
OnStar 437
Connected Services 442
Index 446

Introduction

California Proposition 65 Warning

WARNING

Operating, servicing and maintaining a passenger vehicle or off-highway motor vehicle can expose you to chemicals including engine exhaust, carbon monoxide, phthalates, and lead, which are known to the State of California to cause cancer and birth defects or other reproductive harm. To minimize exposure, avoid breathing exhaust, do not idle engine except as necessary, service your vehicle in a well-ventilated area and wear gloves or wash your hands frequently when servicing your vehicle. For more information go to www.P65Warnings.ca.gov/passenger-vehicle.

85865404 A

©2026 General Motors LLC. All Rights Reserved.

NOT FOR RESALE

Introduction



The names, logos, emblems, slogans, vehicle model names, and vehicle body designs appearing in this manual including, but not limited to, GM, the GM logo, GMC, the GMC Truck Emblem, SIERRA, and DENALI are trademarks and/or service marks of General Motors LLC, its subsidiaries, affiliates, or licensors.

For vehicles first sold in Canada, substitute the name "General Motors of Canada Company" for GMC Division wherever it appears in this manual.

This manual describes features that may or may not be on the vehicle because of optional equipment that was not purchased on the vehicle, model variants, country specifications, features/applications that may not be available in your region, or changes subsequent to this publication's release, including changes in standard or optional content.

Refer to the purchase documentation relating to your specific vehicle to confirm the features.

Canadian Vehicle Owners

You can obtain a copy of this guide in French from your dealer, at www.helminc.com, or from the following address:

Propriétaires Canadiens

On peut obtenir un exemplaire de ce guide en français auprès du concessionnaire ou à l'adresse suivante:

Helm, Incorporated
Attention: Customer Service
47911 Halyard Drive
Plymouth, MI 48170
USA

Québec Consumer Protection Act Disclosure (Québec Customers Only)

Information regarding the availability of replacement parts, repair services, and information necessary to maintain or repair our products (applicable to Quebec consumers only).

Pursuant to the Consumer Protection Act (Québec) and the applicable regulation, General Motors of Canada Company does not guarantee the availability of replacement parts or repair services for its products, nor does it guarantee the availability of information necessary to maintain or repair its products. General Motors of Canada Company does offer access to certain automobile data for purposes of diagnostics, maintenance or repair in accordance with section 39.4 of the Consumer Protection Act (Québec).

Danger, Warning, and Caution

Warning messages found on vehicle labels and in this manual describe hazards and what to do to avoid or reduce them.

NOT FOR RESALE

⚠ Danger

Danger indicates a hazard with a high level of risk which will result in serious injury or death.

⚠ Warning

Warning indicates a hazard that could result in injury or death.

Caution

Caution indicates a hazard that could result in property or vehicle damage.



A circle with a slash through it is a safety symbol which means "Do not," "Do not do this," or "Do not let this happen."

Symbols

The vehicle has components and labels that use symbols instead of text. Symbols are shown along with the text describing the operation or information relating to a specific component, control, message, gauge, or indicator.

Vehicle Symbol Chart

This chart defines the symbols that may be found on the vehicle.

: Air Conditioning System

: Air Conditioning Refrigerant Oil

: Airbag Readiness Light

: Antilock Brake System (ABS)

: Brake System Warning Light

: Dispose of Used Components Properly

: Do Not Apply High Pressure Water

: Engine Coolant Temperature

: Flame/Fire Prohibited

: Flammable

: Forward Collision Alert

: Fuse Block Cover Lock Location

: Fuses

: ISOFIX/LATCH System Child Restraints

: Keep Fuse Block Covers Properly Installed

: Lane Change Alert

: Lane Departure Warning

: Lane Keep Assist

: Malfunction Indicator Light

: Oil Pressure

: Park Assist

: Pedestrian Ahead Indicator

: Power

: Rear Cross Traffic Alert

: Registered Technician

: Remote Start

: Risk of Electrical Fire

: Seat Belt Reminders

: Side Blind Zone Alert

: Stop/Start

: Tire Pressure Monitor

NOT FOR RESALE

: Traction Control/StabiliTrak/Electronic Stability Control

: Under Pressure

: Vehicle Ahead Indicator

Here are some additional symbols that may be found on the vehicle and what they mean. See the features in this manual for information.

: Shown when the owner's manual has additional instructions or information.

: Shown when the service manual has additional instructions or information.

: Shown when there is more information on another page — "see page."

NOT FOR RESALE

Instrument Panel Overview

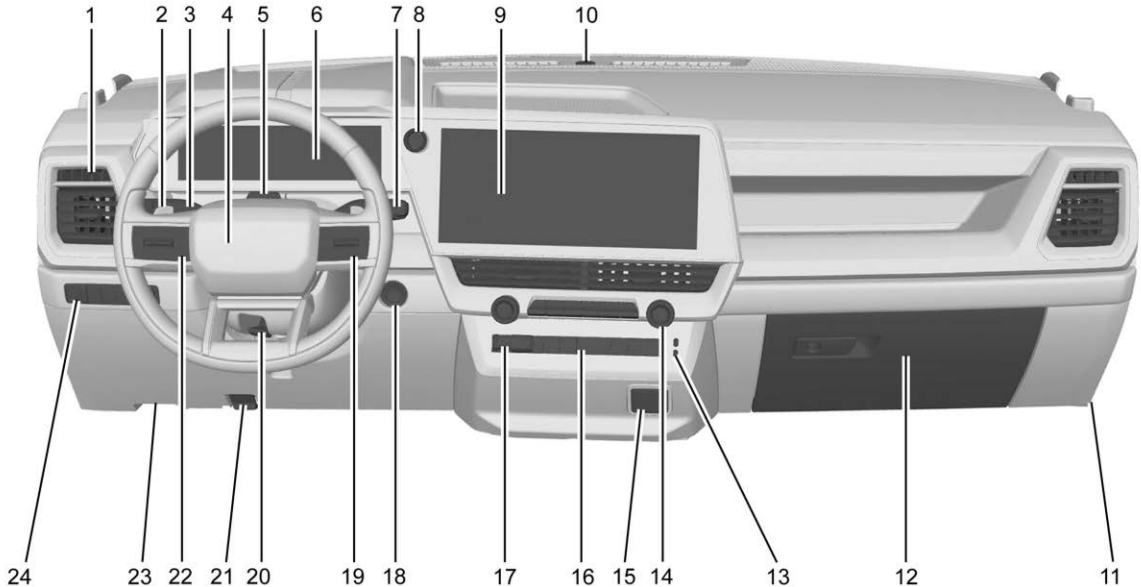

Base Level

NOT FOR RESALE

1. Air Vents. See *Air Vents* ⇨ *185*.
2. Range Selection Mode. See *Manual Mode* ⇨ *225*.
3. Turn Signal Lever. See *Turn and Lane-Change Signals* ⇨ *143*.

   Windshield Wiper/Washer. See *Windshield Wiper/Washer* ⇨ *107*.
4. Horn. See *Horn* ⇨ *107*.
5. Driver Monitoring System Camera (If Equipped). See *Driver Attention Assist* ⇨ *300*.
6. Instrument Cluster. See *Instrument Cluster* ⇨ *112*.
7. Shift Lever. See *Automatic Transmission* ⇨ *222*.
8. Infotainment Controls. See *Overview* ⇨ *150*.
9. Infotainment Display. See *Using the System* ⇨ *151*.
10. Light Sensor. See *Automatic Headlight System* ⇨ *142*.

    Vehicle Alarm System. See *Vehicle Security* ⇨ *33*.
11. Instrument Panel Fuse Block. See *Instrument Panel Fuse Block* ⇨ *362*.
12. Glove Box. See *Glove Box* ⇨ *99*.
13. USB Port. See *USB Port* ⇨ *155*.
14. Automatic Climate Control System. See *Automatic Climate Control System* ⇨ *180*.

    Dual Automatic Climate Control System. See *Dual Automatic Climate Control System* ⇨ *183*.
15. Power Outlet. See *Power Outlets* ⇨ *108*.
16. Automatic Transfer Case Control (If Equipped). See *Four-Wheel Drive* ⇨ *226*.

    Four-Wheel Drive (If Equipped). See *Four-Wheel Drive* ⇨ *226*.

    Driver Mode Control (If Equipped). See *Driver Mode Control* ⇨ *234*.
17. Trailer Brake Control Panel. See *General Towing Information* ⇨ *316*.
18. ENGINE START/STOP. See *Ignition Positions* ⇨ *208*.
19. Steering Wheel Controls. See *Steering Wheel Controls* ⇨ *151*.

    Instrument Cluster Controls. See *Instrument Cluster* ⇨ *112*.

    Heated Steering Wheel (If Equipped). See *Heated Steering Wheel* ⇨ *106*.
20. Steering Wheel Adjustment. See *Steering Wheel Adjustment* ⇨ *106*.
21. Hood Release. See *Hood* ⇨ *322*.
22. Adaptive Cruise Control. See *Adaptive Cruise Control (Advanced)* ⇨ *240*.

    L Button. See *Manual Mode* ⇨ *225*.

    Forward Collision Alert System. See *Forward Collision Alert (FCA) System* ⇨ *287*.
23. Data Link Connector (Out of View). See *Malfunction Indicator Light (Gasoline Check Engine Light)* ⇨ *119 Malfunction Indicator Light (Diesel Check Engine Light)* ⇨ *121*.
24. Electric Parking Brake. See *Electric Parking Brake* ⇨ *229*.

    Auto Stop Disable Switch. See *Stop/Start System* ⇨ *211*.

    Locking Rear Axle (If Equipped). See *Locking Rear Axle* ⇨ *238*.

    Locking Front Axle (If Equipped). See *Locking Front Axle* ⇨ *239*.

NOT FOR RESALE

Exterior Cargo Lights (If Equipped). See *Exterior Cargo Lights* ⇨ *145*.

Task Lighting (If Equipped). See *Task Lighting* ⇨ *144*.

Power Release Tailgate (If Equipped). See *Tailgate* ⇨ *24*.

Instrument Panel Illumination Control. See *Instrument Panel Illumination Control* ⇨ *145*.

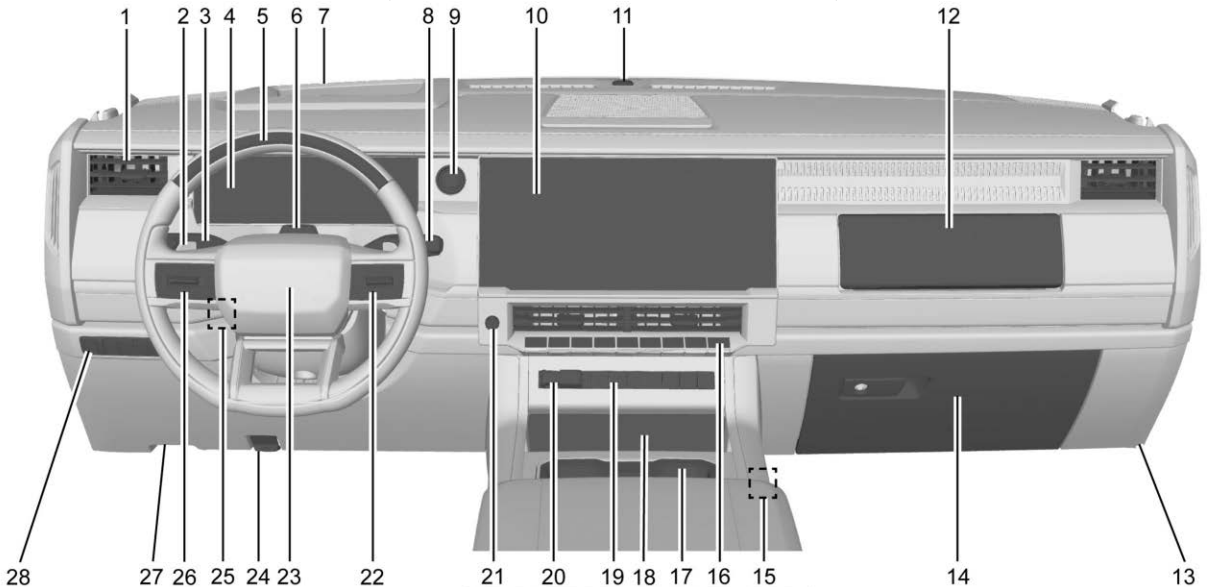

Midlevel

NOT FOR RESALE

1. Air Vents. See *Air Vents* ⇨ *185*.
2. Range Selection Mode. See *Manual Mode* ⇨ *225*.
3. Turn Signal Lever. See *Turn and Lane-Change Signals* ⇨ *143*.

   Windshield Wiper/Washer. See *Windshield Wiper/Washer* ⇨ *107*.
4. Instrument Cluster. See *Instrument Cluster* ⇨ *112*.
5. Super Cruise Light Bar (If Equipped). See *Super Cruise* ⇨ *263*.
6. Driver Monitoring System Camera (If Equipped). See *Driver Attention Assist* ⇨ *300*.

   See *Super Cruise* ⇨ *263*.
7. Head-Up Display (HUD) (If Equipped). See *Head-Up Display (HUD)* ⇨ *134*.
8. Shift Lever. See *Automatic Transmission* ⇨ *222*.
9. ENGINE START/STOP. See *Ignition Positions* ⇨ *208*.
10. Infotainment Display. See *Using the System* ⇨ *151*.
11. Light Sensor. See *Automatic Headlight System* ⇨ *142*.

    Vehicle Alarm System. See *Vehicle Security* ⇨ *33*.
12. Upper Glove Box. See *Glove Box* ⇨ *99*.
13. Instrument Panel Fuse Block. See *Instrument Panel Fuse Block* ⇨ *362*.
14. Lower Glove Box. See *Glove Box* ⇨ *99*.
15. USB Port (Out of View) (If Equipped). See *USB Port* ⇨ *155*.
16. Automatic Climate Control System. See *Automatic Climate Control System* ⇨ *180*.

    Dual Automatic Climate Control System. See *Dual Automatic Climate Control System* ⇨ *183*.

    Upper Glove Box Switch. See *Glove Box* ⇨ *99*.

    Infotainment Display Storage Switch (If Equipped). See *Instrument Panel Storage* ⇨ *99*.
17. Cupholders. See *Cupholders* ⇨ *100*.
18. Wireless Charging. See *Wireless Charging* ⇨ *109*.
19. Automatic Transfer Case Control (If Equipped). See *Four-Wheel Drive* ⇨ *226*.

    Four-Wheel Drive (If Equipped). See *Four-Wheel Drive* ⇨ *226*.

    Driver Mode Control (If Equipped). See *Driver Mode Control* ⇨ *234*.
20. Trailer Brake Control Panel. See *General Towing Information* ⇨ *316*.
21. Infotainment Controls. See *Overview* ⇨ *150*.
22. Steering Wheel Controls. See *Steering Wheel Controls* ⇨ *151*.

    Instrument Cluster Controls. See *Instrument Cluster* ⇨ *112*.

    Heated Steering Wheel (If Equipped). See *Heated Steering Wheel* ⇨ *106*.
23. Horn. See *Horn* ⇨ *107*.
24. Hood Release. See *Hood* ⇨ *322*.
25. Steering Wheel Adjustment (Out of View). See *Steering Wheel Adjustment* ⇨ *106*.
26. Adaptive Cruise Control. See *Adaptive Cruise Control (Advanced)* ⇨ *240*.

NOT FOR RESALE

Super Cruise (If Equipped). See *Super Cruise* ⇨ *263*.

L Button. See *Manual Mode* ⇨ *225*.

Forward Collision Alert System. See *Forward Collision Alert (FCA) System* ⇨ *287*.

27. Data Link Connector (Out of View). See *Malfunction Indicator Light (Gasoline Check Engine Light)* ⇨ *119 Malfunction Indicator Light (Diesel Check Engine Light)* ⇨ *121*.

28. Electric Parking Brake. See *Electric Parking Brake* ⇨ *229*.

    Auto Stop Disable Switch. See *Stop/Start System* ⇨ *211*.

    Locking Rear Axle (If Equipped). See *Locking Rear Axle* ⇨ *238*.

    Locking Front Axle (If Equipped). See *Locking Front Axle* ⇨ *239*.

Exterior Cargo Lights. See *Exterior Cargo Lights* ⇨ *145*.

Task Lighting (If Equipped). See *Task Lighting* ⇨ *144*.

Power Release Tailgate (If Equipped). See *Tailgate* ⇨ *24*.

Instrument Panel Illumination Control. See *Instrument Panel Illumination Control* ⇨ *145*.

NOT FOR RESALE

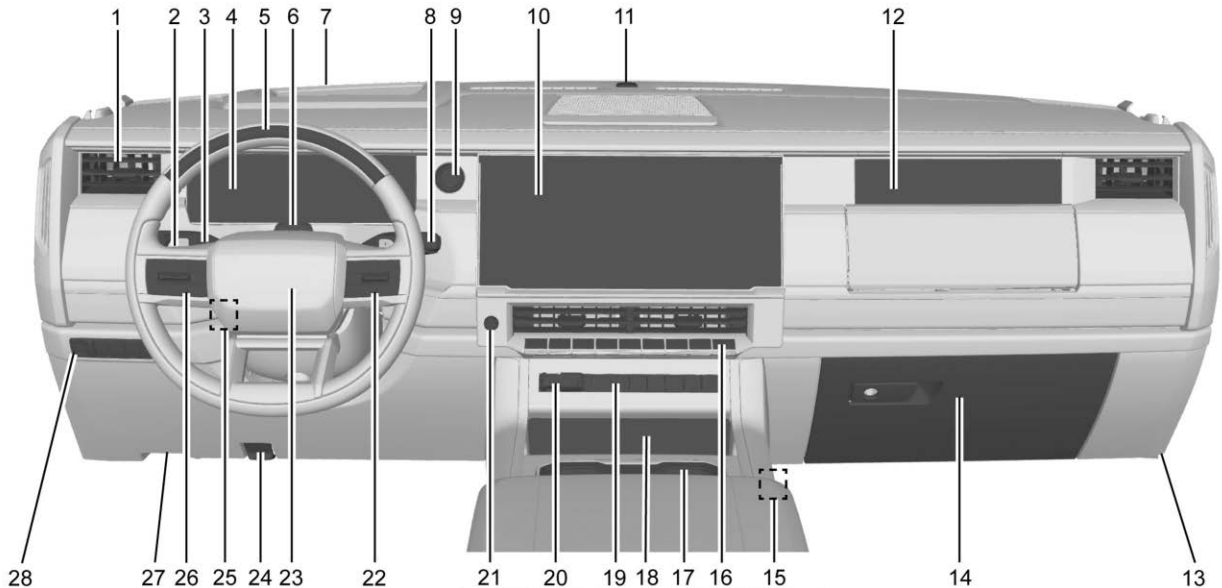

Uplevel

NOT FOR RESALE

1. Air Vents. See *Air Vents* ➪ *185*.
2. Range Selection Mode. See *Manual Mode* ➪ *225*.
3. Turn Signal Lever. See *Turn and Lane-Change Signals* ➪ *143*.

   Windshield Wiper/Washer. See *Windshield Wiper/Washer* ➪ *107*.
4. Instrument Cluster. See *Instrument Cluster* ➪ *112*.
5. Super Cruise Light Bar (If Equipped). See *Super Cruise* ➪ *263*.
6. Driver Monitoring System Camera. See *Super Cruise* ➪ *263*.
7. Head-Up Display (HUD) (If Equipped). See *Head-Up Display (HUD)* ➪ *134*.
8. Shift Lever. See *Automatic Transmission* ➪ *222*.
9. ENGINE START/STOP. See *Ignition Positions* ➪ *208*.
10. Infotainment Display. See *Using the System* ➪ *151*.
11. Light Sensor. See *Automatic Headlight System* ➪ *142*.

    Vehicle Alarm System. See *Vehicle Security* ➪ *33*.
12. Passenger Display. See *Passenger Infotainment* ➪ *156*.
13. Instrument Panel Fuse Block. See *Instrument Panel Fuse Block* ➪ *362*.
14. Glove Box. See *Glove Box* ➪ *99*.
15. USB Port (Out of View) (If Equipped). See *USB Port* ➪ *155*.
16. Automatic Climate Control System. See *Automatic Climate Control System* ➪ *180*.

    Dual Automatic Climate Control System. See *Dual Automatic Climate Control System* ➪ *183*.

    Upper Glove Box Switch (If Equipped). See *Glove Box* ➪ *99*.

    Passenger Display Switch (If Equipped). See *Passenger Infotainment* ➪ *156*.

    Infotainment Display Storage Switch (If Equipped). See *Instrument Panel Storage* ➪ *99*.
17. Cupholders. See *Cupholders* ➪ *100*.
18. Wireless Charging. See *Wireless Charging* ➪ *109*.
19. Automatic Transfer Case Control (If Equipped). See *Four-Wheel Drive* ➪ *226*.

    Four-Wheel Drive (If Equipped). See *Four-Wheel Drive* ➪ *226*.

    Driver Mode Control (If Equipped). See *Driver Mode Control* ➪ *234*.
20. Trailer Brake Control Panel. See *General Towing Information* ➪ *316*.
21. Infotainment Controls. See *Overview* ➪ *150*.
22. Steering Wheel Controls. See *Steering Wheel Controls* ➪ *151*.

    Instrument Cluster Controls. See *Instrument Cluster* ➪ *112*.

    Heated Steering Wheel (If Equipped). See *Heated Steering Wheel* ➪ *106*.
23. Horn. See *Horn* ➪ *107*.
24. Hood Release. See *Hood* ➪ *322*.
25. Steering Wheel Adjustment (Out of View). See *Steering Wheel Adjustment* ➪ *106*.
26. Adaptive Cruise Control. See *Adaptive Cruise Control (Advanced)* ➪ *240*.

    Super Cruise (If Equipped). See *Super Cruise* ➪ *263*.

NOT FOR RESALE

L Button. See *Manual Mode* ⇨ *225*.

Forward Collision Alert System. See *Forward Collision Alert (FCA) System* ⇨ *287*.

27. Data Link Connector (Out of View). See *Malfunction Indicator Light (Gasoline Check Engine Light)* ⇨ *119 Malfunction Indicator Light (Diesel Check Engine Light)* ⇨ *121*.
28. Electric Parking Brake. See *Electric Parking Brake* ⇨ *229*.

    Auto Stop Disable Switch. See *Stop/Start System* ⇨ *211*.

    Locking Rear Axle (If Equipped). See *Locking Rear Axle* ⇨ *238*.

    Locking Front Axle (If Equipped). See *Locking Front Axle* ⇨ *239*.

    Exterior Cargo Lights. See *Exterior Cargo Lights* ⇨ *145*.

    Task Lighting (If Equipped). See *Task Lighting* ⇨ *144*.

    Power Release Tailgate (If Equipped). See *Tailgate* ⇨ *24*.

    Instrument Panel Illumination Control. See *Instrument Panel Illumination Control* ⇨ *145*.

NOT FOR RESALE

Keys, Doors, and Windows

Keys and Locks
- Keys 13
- Remote Key 14
- Remote Key Operation 14
- Remote Start 19
- Door Locks 20
- Power Door Locks 21
- Delayed Locking 21
- Automatic Door Locks 21
- Lockout Protection 22
- Safety Locks 22
- Digital Key 22

Doors
- Tailgate 24
- Transporting Items That Can Catch Fire 32
- Power Assist Steps 32

Vehicle Security
- Vehicle Security 33
- Vehicle Alarm System 33
- Steering Column Lock 34
- Immobilizer Operation 34

Exterior Mirrors
- Convex Mirrors 35
- Trailer-Tow Mirrors 35
- Power Mirrors 36
- Folding Mirrors 37
- Heated Mirrors 37
- Automatic Dimming Mirror 38
- Reverse Tilt Mirrors 38

Interior Mirrors
- Interior Rearview Mirrors 38
- Manual Rearview Mirror 38
- Automatic Dimming Rearview Mirror 38
- Rear Camera Mirror 38

Windows
- Windows 40
- Power Windows 41
- Rear Windows 42
- Sun Visors 42

Roof
- Sunroof 43

Keys and Locks

Keys

⚠ Warning

Leaving children in a vehicle with a remote key is dangerous and children or others could be seriously injured or killed. They could operate the power windows or other controls or make the vehicle move. The windows will function with the remote key in the vehicle, and children or others could be caught in the path of a closing window. Do not leave children in a vehicle with a remote key.

NOT FOR RESALE





Use the mechanical key inside the remote key for all locks.

To remove the mechanical key, press the button on the side of the remote key near the bottom, and pull the mechanical key out. Never pull the mechanical key out without pressing the button.

The mechanical key may have a bar-coded key tag that the dealer or qualified locksmith can use to make new keys. Store this information in a safe place, not in the vehicle.

See your dealer if you need a replacement or additional key.

If it becomes difficult to turn a key, inspect the key blade for debris. Periodically clean with a brush or pick.

With an active OnStar or connected service plan, an OnStar Advisor may remotely unlock the vehicle. See *OnStar Overview* ⇨ *437*.

If locked out of the vehicle, see *Roadside Assistance Program* ⇨ *429*.

Remote Key

If your remote key is not working correctly:

- The remote key may be too far from the vehicle.
- Other vehicles or objects may be blocking the signal.
- The battery may need replacing. See "Battery Replacement" under *Remote Key Operation* ⇨ *14*.

If the remote key is still not working correctly after checking the distance, location, and battery, see your dealer or a qualified technician for service.

Remote Key Operation

The remote key operates various functions from up to 60 m (197 ft) away and includes a mechanical key for locks. See *Keys* ⇨ *13*.



NOT FOR RESALE

Functions

To view function settings, go to the infotainment app screen and select Settings > Vehicle > Remote Lock, Unlock, Start.

: Press to lock all doors and the tailgate, if equipped, and arm the alarm system. See *Vehicle Alarm System* ⇨ *33*. If enabled, the turn signals flash.

If you press when the driver door is open and the vehicle is on, all doors will lock and the driver door will immediately unlock.

: If enabled, press twice within five seconds and the turn signals flash and the horn sounds to confirm the vehicle is locked.

: Press once to unlock the driver door and disarm the alarm system. See *Vehicle Alarm System* ⇨ *33*.

: Press twice within three seconds to unlock all doors and the tailgate.

If enabled, the turn signal lights flash twice to indicate the doors are unlocked. You can program the remote key to unlock all doors with one press or program the exterior lights to turn on. Follow the onscreen prompts in Settings.

: Press twice to release the tailgate. See *Tailgate* ⇨ *24*.

: Press and release within one second to initiate the vehicle locator. The exterior lights flash and the horn sounds three times. Press and hold for at least three seconds to sound the panic alarm.

The horn sounds and the turn signals flash for about 30 seconds or until you press again or start the vehicle.

: Press twice from outside the vehicle to remote start. You cannot start the vehicle if a remote key is left inside. See *Remote Start* ⇨ *19*.

If equipped, you can operate the folding mirrors through the remote key. See *Folding Mirrors* ⇨ *37*.

If equipped, you can express-operate the windows through the remote key. See *Power Windows* ⇨ *41*.

Keyless Access Operation

The Keyless Access system allows you to access the doors and tailgate without removing the remote key from your pocket or bag. The remote key must be within 1 m (3 ft) of the tailgate or door being opened.

Keyless Unlocking

When the doors are locked, press the button on the driver door handle to unlock the driver door. Press the button again within five seconds to unlock the passenger doors and tailgate. When the doors are locked, press the button on a passenger door handle, if equipped, to unlock all doors.

To program all doors to unlock when you press the driver door button once, on the infotainment app screen, select Settings > Vehicle > Remote Lock, Unlock, Start.

Keyless Locking

Pressing the driver door button will lock all doors if any of the following conditions occur:

- The button was used to unlock all doors.
- Any door has been opened and all doors are now closed.

NOT FOR RESALE

Pressing any passenger door button will lock all doors if any of the following conditions occur:

- It has been more than five seconds since the first button press.
- All doors were unlocked with two button presses.
- Any door has been opened and all doors are now closed.

Passive Locking

The vehicle locks several seconds after you close all doors, turn the vehicle off, and remove at least one or all remote keys from the interior. If other electronic devices interfere with the remote key signal, the vehicle may not detect the remote key inside the vehicle. If passive locking is enabled, the doors may lock with the remote key inside the vehicle. Do not leave the remote key in an unattended vehicle.

To view available settings from the infotainment app screen, touch Settings > Vehicle > Remote Lock, Unlock, Start.

Temporary Disable of Passive Locking

To temporarily disable passive locking, press and hold on the interior door switch with a door open for at least four seconds, or until you hear three audible alerts. Passive locking remains disabled until you press on the interior door or start the vehicle.

Mechanical Key Access

To access a vehicle with the mechanical key in case of a weak remote key battery, see *Door Locks* ⇨ *20*.

Remote Key Alerts

To view available settings for these alerts, on the infotainment app screen, select Settings > Vehicle > Remote Lock, Unlock, Start.

Wireless Charging Error: Placing the remote key on a wireless charger may prompt NO REMOTE DETECTED on the Driver Information Center, and the vehicle may not start. Do not place the remote key on the wireless charger. See *Wireless Charging* ⇨ *109*.

Remote Key Removed From Vehicle Alert: If you turn the vehicle on with a door open, and then close all doors, the vehicle will check for remote keys or digital keys inside. If the vehicle does not detect a remote key or digital key, or you started the vehicle with only a key card present, the Driver Information Center displays NO REMOTE DETECTED and the horn sounds three times. This occurs only once each time you drive the vehicle.

Remote Key Left in Vehicle Reminder: When you turn off the vehicle and leave a remote key inside, the horn sounds three times after you close all doors.

Other conditions can impact the performance of the remote key. See *Remote Key* ⇨ *14*.

Programming Remote Keys to the Vehicle

Only remote keys programmed to the vehicle will work. If a remote key is lost or stolen, a replacement can be purchased and programmed through your dealer. The vehicle can be reprogrammed so that lost or stolen remote keys no longer work. Any remaining remote keys will need to be reprogrammed. Each vehicle can have up to eight remote keys matched to it.

Starting the Vehicle with a Low Remote Key Battery

For improved vehicle security, the remote key is equipped with a motion sensor. If the remote key has been idle for an extended period, when you start the vehicle, the Driver Information

NOT FOR RESALE

Center may display KEY IN SLEEP MODE, MOVE KEY, THEN START. Move the remote key slightly and try starting the vehicle.

If the remote key battery is weak or if there is interference with the signal, when you start the vehicle, the Driver Information Center may display NO KEY FOUND, REPLACE BATTERY IN KEY or NO REMOTE KEY WAS DETECTED PLACE KEY IN KEY POCKET THEN START YOUR VEHICLE.

To start the vehicle:

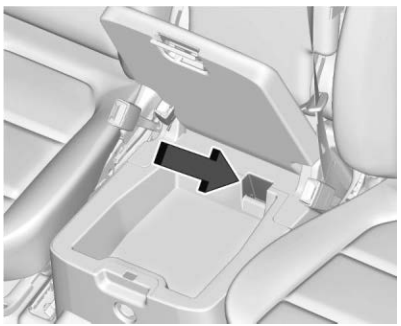

Remote Key Pocket without Bucket Seats (Lower Compartment)

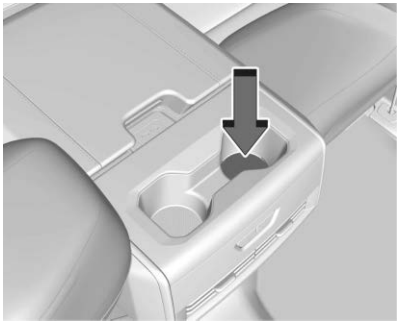

Remote Key Pocket with Bucket Seats

1. Place the remote key in the remote key pocket with the buttons facing down.
2. With the vehicle in P (Park) or N (Neutral), press the brake pedal and ENGINE START/ STOP. Replace the remote key battery as soon as possible.

Battery Replacement

⚠ Warning

Never allow children to play with the remote key. The remote key contains a small battery, which can be a choking hazard. If swallowed, internal burns can occur, resulting in severe injury or death. Seek medical attention immediately if a battery is swallowed.

⚠ Warning

To avoid personal injury, do not touch metal surfaces on the remote key when it has been exposed to extreme heat. These surfaces can be hot to the touch at temperatures above 59 °C (138 °F).

Caution

When replacing the battery, do not touch any of the circuitry on the remote key. Static from your body could damage the remote key.

NOT FOR RESALE

Caution

Always replace the battery with the correct type. Replacing the battery with an incorrect type could potentially create a risk of battery explosion. Dispose of used batteries according to instructions and local laws. Do not attempt to burn, crush, or cut the used battery, and avoid exposing the battery to environments with extremely low air pressures or high temperatures.

Caution

If the remote key is not reassembled properly, liquids could enter the housing and damage the circuitry, resulting in a remote key malfunction and/or failure. To prevent damage, always follow the steps for remote key reassembly in this manual to ensure the remote key is sealed properly whenever the remote key is opened.

Replace the battery if the Driver Information Center displays REPLACE BATTERY IN KEY. The battery is not rechargeable.

To replace the battery:



1. Press the button on the side of the remote key near the bottom and pull the mechanical key out. Never pull the mechanical key out without pressing the button.



2. Use the mechanical key blade in the slot to remove the battery cover by hand.

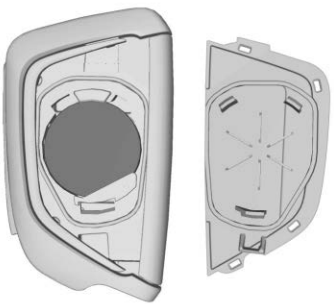

3. Remove the battery cover.

NOT FOR RESALE

4. Pull the seal by pulling on the tab to access the battery.
5. Remove the old battery. Do not use a metal object.
6. Insert the new battery, positive side facing up. Only Panasonic CR2450 Lithium batteries have been validated to meet GM's minimum performance requirements.
7. Place the seal back into the groove around the battery compartment.
8. Replace the battery cover by snapping it back into the remote key.
9. Reinsert the mechanical key.

Remote Start

This feature allows the engine to be started from outside the vehicle.

(x2) : This button on the remote key is for remote start.

The following features may come on automatically when the vehicle is started remotely, if equipped, depending on the outside temperature:

- Climate control system.
- Rear defog and, if equipped, the heated and ventilated seats. See *Heated and Ventilated Front Seats* ⇨ *54*. The rear defog indicator light does not turn on during a remote start.
- Heated steering wheel, if equipped. See *Heated Steering Wheel* ⇨ *106*.

Laws restrict the use of remote starters in some areas. Be sure to check local regulations before using the remote starter.

Do not use remote start if the vehicle is low on fuel. The vehicle may run out of fuel.

The vehicle cannot be started remotely if:

- The remote key is inside the vehicle.
- The hood is open.
- There is an emission control system malfunction and the light is on.
- The ignition is in any mode other than off. See *Ignition Positions* ⇨ *208*.
- The hazard warning flashers are on.
- The 30 minutes of engine run time timer has expired. See "Total Engine Run Time" later in this section.
- The vehicle is not in P (Park).

The engine will turn off during a remote vehicle start if:

- The coolant temperature gets too high.
- The oil pressure gets too low.

The remote key range may be reduced while the vehicle is on.

Other conditions can affect the performance of the remote key. See *Remote Key* ⇨ *14*.

Starting the Engine Using Remote Start

Press (x2) twice on the remote key. The turn signal lights will flash. The lights flash to confirm the request to remote start the vehicle has been received. During the remote start the parking lights will remain on as long as the engine is running.

The engine will shut off after 15 minutes or after the remainder of the 30 minute total running time is used, unless you stop the remote start before engine running has completed or the vehicle is turned on.

Press the brake pedal and turn the ignition on to drive the vehicle.

NOT FOR RESALE

Total Engine Run Time

Remote start can be used for up to 30 minutes of total engine run time.

After two remote starts of 15 minutes, or multiple shorter time starts totaling 30 minutes have been used, the vehicle must be started and then turned off before the remote start can be used again.

Canceling a Remote Start

To cancel a remote start, do one of the following:

- Press (x2). The parking lights will turn off.
- Turn on the hazard warning flashers.
- Turn the ignition on and then off.

Door Locks

⚠ Warning

Unlocked doors can be dangerous.

(Continued)

Warning (Continued)

- Passengers, especially children, can easily open the doors and fall out of a moving vehicle. The doors can be unlocked and opened while the vehicle is moving. The chance of being thrown out of the vehicle in a crash is increased if the doors are not locked. So, all passengers should wear seat belts properly and the doors should be locked whenever the vehicle is driven.
- Do not pull the door handles while the vehicle is in motion. The door may open with only a single pull. Always use safety locks when children are in the rear seats. See *Safety Locks* ⇨ *22*.
- Young children who get into unlocked vehicles may be unable to get out. A child can be overcome by extreme heat and can suffer permanent injuries or even death from heat stroke. Always lock the vehicle whenever leaving it.
- Outsiders can easily enter through an unlocked door when you slow down or stop the vehicle. Locking the doors can help prevent this from happening.

There are several ways to lock and unlock the vehicle.

From outside:

- Use the remote key.
- Use Keyless Access, if equipped.
- Use the mechanical key in the driver door or the passenger door, if equipped.

From inside:

- Press  or  on the power door lock switch. See *Power Door Locks* ⇨ *21*.
- Pull the door handle once to unlock the door. Pull the handle again to open the door.

See *Vehicle Alarm System* ⇨ *33*.

NOT FOR RESALE

Keyless Access

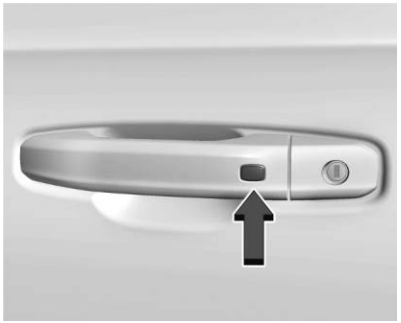

If equipped, the remote key must be within 1 m (3 ft) of the tailgate or door being opened or locked. Press the button on the door handle to open. See "Keyless Access Operation" in *Remote Key Operation* ⇨ *14*.

Free-Turning Locks

The door key lock cylinder turns freely when either the wrong key is used, or the correct key is not fully inserted. The free-turning door lock feature prevents the lock cylinder from being forced open. To reset the lock cylinder, ensure the correct key is fully inserted into the lock cylinder. Rotate the key until you feel the lock cylinder click back into place. Remove the key and reinsert fully. Rotate the key to unlock the vehicle.

Power Door Locks

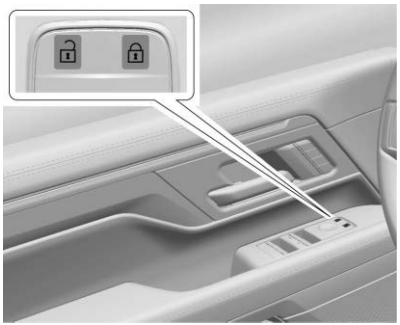

: Press to lock the doors.

: Press to unlock the doors.

Delayed Locking

This feature delays the door locking for five seconds after all doors are closed. While the feature is on, to request a delayed lock, press on the power door lock switch while the vehicle is off and the door is open. An audible alert will sound three times to confirm the feature is active. If you reopen a door before the end of the five-second timer, the timer will reset when you close all doors again. To lock the doors immediately, press on the door switch or remote key.

To view available settings, from the app screen on the infotainment display, select Settings > Vehicle > Power Door Locks.

Automatic Door Locks

The doors lock automatically when you close all the doors, turn the vehicle on, and shift out of P (Park).

If a door is unlocked, opened, and then closed, the doors will lock when you either remove your foot from the brake or drive faster than 13 km/h (8 mph).

To unlock the doors:

- Press on the power door lock switch.
- Shift into P (Park).

Automatic door locking cannot be disabled. Automatic door unlocking can be disabled or programmed to unlock all doors or only the driver door. To view available settings from the app screen on the infotainment display, select Settings > Vehicle > Power Door Locks.

NOT FOR RESALE

Lockout Protection

This feature protects you from locking remote keys in the vehicle.

When you have locked the vehicle with the driver door open and turned the vehicle on or to accessory mode, all of the doors will lock and then the driver door will unlock.

When you have locked the vehicle with a door open, then turned the vehicle off and closed all doors, the vehicle will check for remote keys inside. If a remote key is detected and the number of remote keys inside has not reduced, the driver door will unlock and the horn will sound three times.

Press and hold on the power door lock switch to manually override this feature.

Safety Locks

The rear door safety locks prevent passengers from opening the rear doors from inside the vehicle.

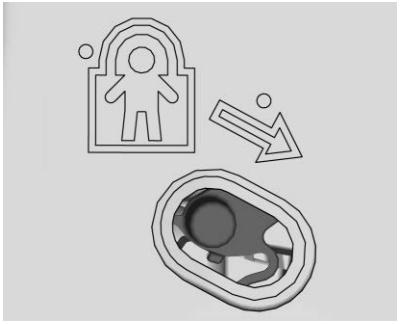

The safety locks are on the inside edge of the rear doors. To engage a safety lock:

1. Move the lever down to the lock position.
2. Close the door.
3. Repeat Steps 1 and 2 on the other door, if desired.

To open a rear door when the safety lock is on:

1. Unlock the door by pulling the inside handle, by pressing the power door unlock switch, or by using the remote key.
2. Open the door from the outside.

To disengage a safety lock:

1. Unlock the door and open it from the outside.
2. Move the lever up to unlock.
3. Repeat Steps 1 and 2 on the other door, if desired.

Digital Key

If equipped and enabled, the digital key feature allows you to access and operate the vehicle using a smart device. Many of the functions performed by a remote key can also be done using a digital key. See *Remote Key Operation* ⇨ *14*.

Bring your remote key to all service appointments at your dealer.

Digital key communicates with the vehicle using Ultrawide Band and Bluetooth Low Energy technology.

Only certain iPhone, Apple Watch, and Android smart devices support digital key. Please see the myGMC app or www.gmc.com/support to see if your smart device is compatible.

If the smart device battery is weak or if there is interference with the signal, the Driver Information Center may display NO KEY FOUND or NO REMOTE KEY WAS DETECTED, PLACE KEY IN KEY POCKET THEN START YOUR VEHICLE when starting the vehicle. Charge the smart device battery as soon as possible.

NOT FOR RESALE

You can use the myGMC mobile app and device Wallet to pair, manage, or delete your digital key.

If the digital key is not working:

- Check the distance. The smart device may be too far from the vehicle.
- Check the location. Other vehicles or objects may be blocking the signal. Your body could also impact the signal. Hold the smart device in your hand, away from your body, and toward the vehicle for best results.
- Check that the smart device is turned on and has sufficient battery power.
- Check the connection. Your smart device's Bluetooth connection must be enabled.
  - If it is enabled, try to turn Bluetooth off, then back on.
- Check that your smart device has the latest iOS or Android operating system (OS) downloaded.
- Go to www.gmc.com/support for additional support and frequently asked questions.

If the digital key still does not work, use the key card or the commands in your phone's Wallet or myGMC app as a backup.

Bring your remote key and key card if you have the digital key serviced at your dealer.

Setting up Digital Key

Digital key is only available if you have accepted the OnStar terms and conditions.

1. Log in to your OnStar account in the myGMC mobile app.
2. Select Controls > Keys, then follow the steps on your screen to pair your smart device.

Using Your Digital Key

Digital key allows you to:

- Use passive entry with your smart device to lock and unlock the vehicle's doors, and access the rear compartments without a remote key.

  See "Keyless Access Operation" under *Remote Key Operation* ⇨ *14*.
- Start the vehicle with just your digital key-enabled smart device present.
- Use remote commands in the device Wallet to lock, unlock, and remote start the vehicle.
- Share your digital key with up to three additional people across eight total devices.

Delete keys through the device Wallet or call an OnStar advisor for assistance.

Key Card

Caution
Placing the key card on the wireless charger may damage the card. If the key card is damaged, it may not unlock or start the vehicle. Do not place the key card on the wireless charger.

Your vehicle may be equipped with a key card that unlocks, locks, and starts the vehicle. The key card works by tapping it on the location of the vehicle shown on the back of the key card.

The key card is a back up to the digital key in case the smart device battery is weak or there is interference to the signal. Carry the key card at all times. Store the key card securely to prevent loss, theft, or damage. Do not write or punch holes into the key card.

Only key cards programmed to the vehicle will work. If you lose your key card or it is stolen, you can purchase and program a replacement through your dealer. To prevent lost or stolen key cards from being able to operate the

NOT FOR RESALE

vehicle, see your dealer. Bring your remote key and digital key if you have the key card serviced at your dealer.

Each vehicle can have up to eight key cards programmed to it.



Unlocking with the Key Card

Tap your key card on the driver side door handle to unlock the driver door. To program the key card to unlock all doors, on the infotainment app screen, select Settings > Vehicle > Remote Lock, Unlock, Start > Remote Door Unlock.

Locking with the Key Card

With all doors closed, the vehicle off, and any door unlocked, tap your key card on the driver side door handle to lock all doors.

Starting with the Key Card

You can start your vehicle for a short period after unlocking it with your key card. If the period has ended, you will need to unlock the vehicle with the key card again to start your vehicle.

Doors

Tailgate

Manual Tailgate

⚠ Warning

It is extremely dangerous to ride on the tailgate, even when the vehicle is operated at low speeds. People riding on the tailgate can easily lose their balance and fall in response to vehicle maneuvers. Falling from a moving vehicle may result in serious injuries or death. Do not allow people to

(Continued)

Warning (Continued)

ride on the tailgate. Be sure everyone in your vehicle is in a seat and using a seat belt properly.

Use the remote key or inside door handle to unlock the tailgate.

Open the tailgate by lifting up on its handle while pulling the tailgate down.

To shut the tailgate, firmly push it upward until it latches.

After closing the tailgate, pull it back to be sure it is latched securely.

Power Release Tailgate

⚠ Warning

You or others could be injured if caught in the path of the gate. Always supervise the operation of the gate until it is fully opened or closed and keep hands and other body parts away from the gate when in use.

NOT FOR RESALE

Caution

To avoid damage to the tailgate, make sure the area behind the tailgate is clear before opening it.

In the case of a dead battery, the tailgate can be opened manually.

If equipped, to lock or unlock the tailgate, use the remote key. See *Remote Key Operation* ⇨ *14*.

The vehicle must be in P (Park).

To open the tailgate:

- Press twice on the remote key.

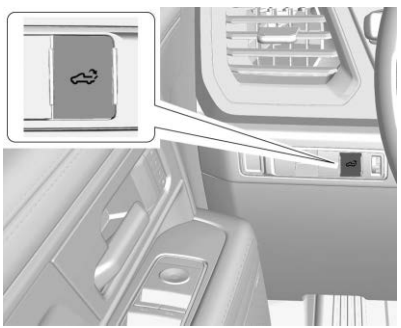

- Press to the left of the steering wheel.



- Press the touch pad on the tailgate handle after unlocking all doors. Use the top of the tailgate to pull against if assistance is required. If equipped with Keyless Access, a locked tailgate can be opened if the remote key is within 1 m (3 ft).

To close the tailgate, firmly push it upward until it latches. Pull it back to be sure it is latched securely.

If the gate is not latched securely a tailgate ajar message will display on your Driver Information Center.

Power Tailgate

⚠ Warning

Make sure there is no one in the way of the power tailgate as it is opening and closing, and keep hands away from the tailgate hinges when in use. You or others could be injured if caught in the path of the power tailgate or tailgate hinges.

Caution

To avoid damage to the tailgate, make sure the area behind the tailgate is clear before opening it.

If equipped with a power open/close tailgate, the tailgate can be opened or closed in several ways. To open the tailgate, do one of the following:

- Press twice on the remote key. See *Remote Key Operation* ⇨ *14*. If equipped with Keyless Access, a locked tailgate can be opened if the remote key is within 1 m (3 ft).

NOT FOR RESALE

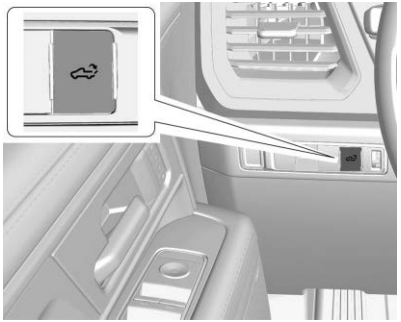

- Press to the left of the steering wheel.



- Press the touch pad on the tailgate handle after unlocking all doors.

To close the tailgate, do one of the following:

- Press on the remote key twice and hold until the tailgate completely closes. If is released prior to it being fully closed, the tailgate will reverse in the other direction.
- Press and hold to the left of the steering wheel until the tailgate is fully closed. If is released prior to the tailgate being fully closed, it will reverse in the other direction. An audible alert will sound when the tailgate is fully closed.
- Press the touch pad on the tailgate handle.

A chime sounds and the taillights flash during the closing operation. If the warning chime is not functioning, the tailgate will not power close. Power opening is still enabled. See your dealer for service.

The power tailgate may be temporarily disabled after repeated power cycling over a short period of time. If this occurs, the tailgate can still be operated manually.

The vehicle must be in P (Park) to operate the power tailgate. If the vehicle is shifted out of P (Park) while the power function is in progress, the tailgate will continue to completion. If the vehicle is accelerated while the tailgate is still closing, the tailgate may stop and reverse direction. Make sure the tailgate is closed and latched before driving.

If the gate is not latched securely a tailgate ajar message will display on your Driver Information Center.

Lift-to-Close Operation



To close the tailgate using the lift-to-close feature, lift the tailgate from the full-open position to at least 10 cm (4 in) and hold

NOT FOR RESALE

it momentarily. Then, the tailgate will start closing automatically. If the tailgate is lifted more than halfway between open and close, then it will not close automatically.

Obstacle Detection

If the tailgate encounters an obstacle during a power open cycle, it will stop on the obstacle. After removing the obstruction, the tailgate can be allowed to open. If the tailgate encounters an obstacle during the closing cycle, it will stop and reverse to full open.

If the tailgate encounters multiple obstacles, the power function will deactivate. After removing the obstructions, manually close the tailgate to resume normal power operation.

Manual Operation

The tailgate can be manually closed from the full-open position when the tailgate is lifted in a continuous motion. If the tailgate motion is stopped between the full-open and half-closed positions, the lift-to-close feature can engage and power close the tailgate. If the touch pad is pressed during power operation, the tailgate will stop and allow manual operation. The tailgate must be held after stopping, or it will continue to open.

MultiPro Tailgate

⚠ Warning

You or others could be injured if caught in the path of the gate. Always supervise the operation of the gate until it is fully opened or closed and keep hands and other body parts away from the gate when in use.

Caution

To avoid damage to the tailgate, make sure the area behind the tailgate is clear before opening it.

Caution

Do not open the inner tailgate with the primary tailgate open if there is a hitch ball or trailer attached. This may damage the tailgate.



If equipped with this feature, the vehicle must be in P (Park) to operate.

When the inner tailgate is not fully closed, the primary tailgate will not open.

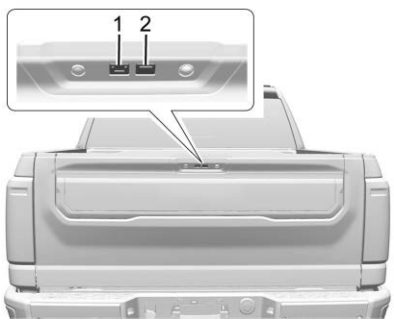

NOT FOR RESALE

If equipped with Inner Gate Lockout Protection, the primary tailgate can be opened with a long press of the primary tailgate button (1).

If the gate is not latched securely a tailgate ajar message will display on your Driver Information Center.

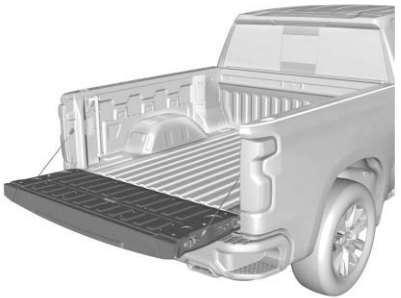

To open the primary tailgate, use one of the following methods:

- Press x2 twice on the remote key. See *Remote Key Operation* ⇨ *14*.
- Press to the left of the steering wheel.
- Press the primary tailgate button (1) on the tailgate after all doors are unlocked. Use the top of the tailgate to pull against if assistance is required. If equipped with Keyless Access, the tailgate can be opened if the remote key is within 1 m (3 ft).

To close the primary tailgate, firmly push it upward until it latches. Pull it back to be sure it is latched securely.

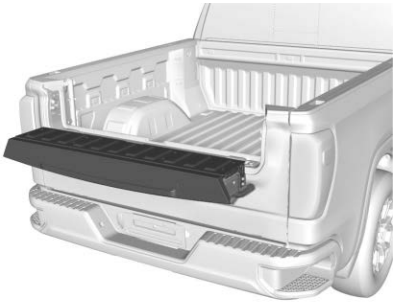

To open the inner tailgate, press the inner tailgate button (2) on the tailgate handle after unlocking all doors. Pull the top of the tailgate to open.

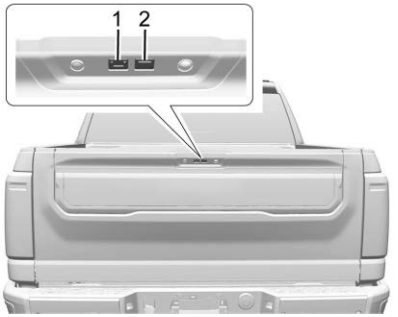

To close the inner tailgate with the primary tailgate closed, firmly push or pull it upward until it latches. Pull it back to be sure it is latched securely.

To close the inner tailgate with the primary tailgate open:

- Hold the primary tailgate and firmly close the inner tailgate.
- Raise the inner tailgate so it meets the primary tailgate and close together at the same time.

When using the tailgate step as a load stop, the load must be secured as the load could shift. See *Cargo Anchor Points* ⇨ *102*.

NOT FOR RESALE

Inner Tailgate Lock

If equipped, the inner tailgate lock helps prevent tailgate damage when a hitch or other equipment is installed.

The feature may turn on in two ways:

Manually: Select Settings > Vehicle > Doors and Locks > Inner Tailgate Lock from the app screen on the infotainment display.

Automatically: If the system detects a connected trailer, it automatically turns the feature on.

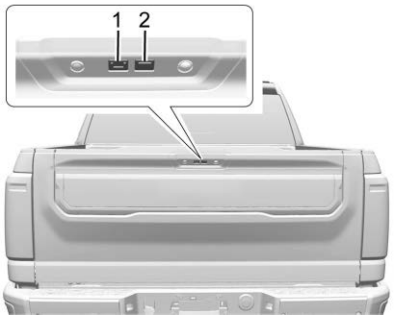

Inner Tailgate Lock Operation

- Press and hold button (2) to open the inner tailgate.
- When the inner tailgate is open, press and hold button (1) to open the primary tailgate.
- When both tailgates are closed, pressing the primary tailgate (1) and inner tailgate (2) buttons at the same time opens only the primary tailgate.

You can override the inner tailgate lock only by pressing and holding the tailgate buttons (1) and (2); the remote key and interior buttons cannot override the lock

Tailgate Step

⚠ Warning

To avoid personal injury, keep hands away from the hinges when operating the tailgate step.

With the primary and inner tailgates open (Step Mode), the tailgate step can be lowered to access the pickup bed.

Using the Step

Caution

When using the tailgate as a step, the load rating is 170 kg (375 lb), which includes a person and cargo. Overloading the tailgate step can cause damage to the tailgate system.



- To lower the tailgate step, press the button at the center of the step. Make sure it lowers to the fully open position.
- To close the tailgate step, lift it firmly. Make sure that both side latches are engaged.

NOT FOR RESALE

Tailgate Load Stop

Caution

Do not place cargo on top of the tailgate load stop. Placing weight on top of the load stop could result in the loss of cargo or risk injury. Keep cargo in front of load stop.

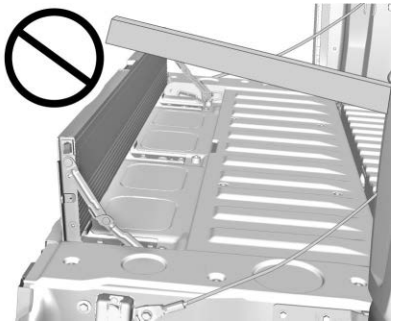

With the primary tailgate open and the inner tailgate closed, the tailgate step can be utilized as a load stop by pressing the button at the center of the step and raising it as shown in the image.

Tailgate Assist Handle

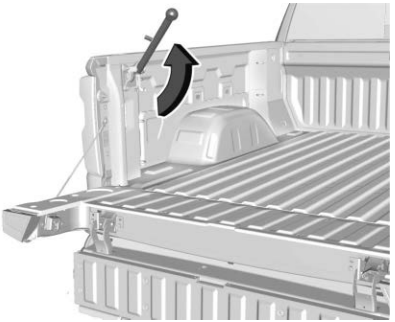

If equipped, the assist handle helps with entering the pickup box. To use:

1. Lift up on the handle until it locks in the open position.
2. To return the assist handle, pull the release lever toward the ball end of the handle and push the handle back to the closed position. Assist handle can not be retracted with the tailgate in the closed position.

Applying Loads to Tailgates

Caution

Do not put ramp loads on the inner tailgate alone. Damage to the inner tailgate may occur.

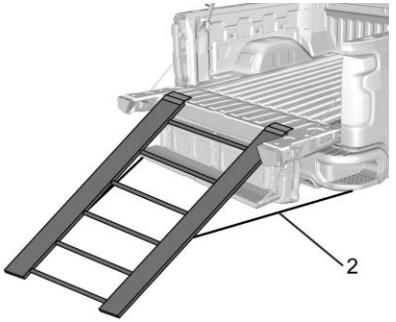

Preferred Method

NOT FOR RESALE

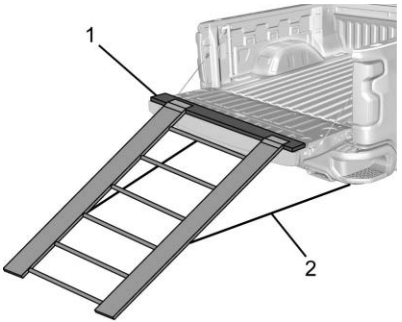

Alternate Method

When applying any load to the tailgate, distribute the weight evenly across the width of the tailgate. This applies to all tailgate types.

- Use a load-distributing member (1).
- Secure the ramp to the bumper (2).

Tailgate Cargo Anchor Points

Caution

The tailgate is designed to be removed at a 45 degree angle. Driving with the tailgate at this angle with tailgate straps can cause the tailgate to detach. Attach the tailgate straps evenly on both sides to distribute the load. If the support straps are not applied evenly, the tailgate may detach, causing damage or injury.

Caution

Overloading the anchor points could result in loss of cargo and/or damage to the tailgate and bed. Do not exceed an anchor point beyond 113 kg (250 lbs).

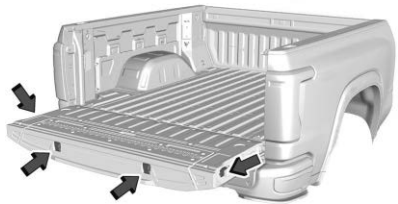

Every tailgate comes standard with four cargo anchor points, the maximum load per cargo anchor point is 113 kg (250 lb) with a maximum total of 226 kg (500 lb) combined. For more information, see *Cargo Anchor Points* ⇨ *102*.

NOT FOR RESALE

Transporting Items That Can Catch Fire

Warning

To avoid personal injury and/or vehicle damage when transporting items that can catch fire, such as leaves, mulch, hay, or cardboard, in the truck bed:

- Make sure items are securely contained inside the truck bed. Never allow them to hang over the sides or fall in between the truck bed and the cab.
- Never place items between the cab and the truck bed. They could touch hot exhaust parts and ignite.

Warning

Keep cigarettes, sparks, and other ignition sources away from the area between the bed of the truck and cab. They could fall onto the fuel system below and start a fire. You or others could be injured and/or the vehicle damaged.

Power Assist Steps

Warning

To avoid personal injury or property damage, before entering or exiting the vehicle, be sure the power assist step is fully extended. Do not step on the power assist step while it is moving. Never place hands or other body parts between the extended power assist step and the vehicle.

If equipped, the power assist steps, when enabled, will extend when the door is opened. They will retract three seconds after the door is closed or immediately if the vehicle starts moving.

Keep hands, children, pets, objects, and clothing clear of the power assist steps when in motion.

The steps will reverse direction if there is an obstruction. If possible, carefully remove the obstruction, then open and close the door on the same side to complete the motion. After obstacle detection, the boards will remain in their previous position (Extend/Stow) until another motion is requested. If the obstacle is not cleared and another motion is requested, the boards will make contact with the obstacle and then reverse to the previous position.

During automatic deployment, a warning will be displayed on the Driver Information Center only when the running boards are obstructed.

Slight movement of the steps while extended is normal.

Kick Switch

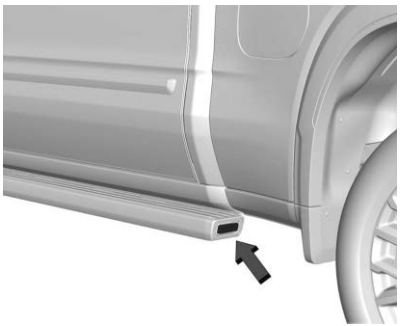

1. Place the vehicle in P (Park) and unlock the doors.
2. Kick the switch to extend the power assist step to the tire.

NOT FOR RESALE

3. Kick the switch again to return to normal operation.

Enable/Disable

The power assist steps can be enabled or disabled. To view available settings from the infotainment screen, touch Settings > Vehicle > Power Assist Steps.

Cleaning

The power assist steps can be extended or retracted for cleaning. To view available settings from the infotainment screen, touch Settings > Vehicle > Power Assist Steps.

Vehicle Security

This vehicle has theft-deterrent features, but is not theft-proof.

Vehicle Alarm System

The indicator light, on the instrument panel near the windshield, indicates the status of the system.

Off: Alarm system is disarmed.

On Solid: Vehicle is secured during the delay to arm the system.

Fast Flash: Vehicle is secured during the delay to arm the system but door, or the hood is open.

Slow Flash: Alarm system is armed.

Arming the Alarm System

To arm the alarm system:

1. Turn off the vehicle.
2. Lock the vehicle in one of three ways:
   - Use the remote key.
   - Use the Keyless Access system.
   - With a door open, press on the interior of the door.
   - If equipped, locking a door with a mechanical key will not arm the alarm system.
3. After 30 seconds the alarm system will arm, and the indicator light will begin to slowly flash. If equipped, press on the remote key a second time to bypass the 30-second delay and immediately arm the alarm system.

The alarm will be activated if a door, the rear access, or the hood is opened without first disarming the system. When the alarm is activated, the lights flash and the horn sounds. The alarm system will then re-arm to monitor for the next unauthorized event.

Disarming the Alarm System

To disarm the alarm system or turn off the alarm if it has been activated:

- Press on the remote key.
- Unlock the vehicle using the Keyless Access system.
- Start the vehicle.

To avoid setting off the alarm by accident:

- Lock the vehicle after all occupants have exited.
- Always unlock a door with the remote key, or use the Keyless Access system.
- If equipped, if you open the driver door without first unlocking with the remote key, the horn will sound and the lights will flash to indicate pre-alarm. If you do not start or unlock the door by pressing on the remote key during the 10-second pre-alarm, the alarm will be activated.

NOT FOR RESALE

Detecting a Tamper Condition

If you press on the remote key and the lights flash and horn sounds three times, an alarm occurred previously while the system was armed.

If the alarm has been activated, a message will appear in the Driver Information Center.

Steering Column Lock

If equipped, the steering column lock is a theft-deterrent feature that locks the steering column when you turn the vehicle off and the driver door is open, or when you open the driver door and then turn the vehicle off.

The steering column unlocks when you turn the vehicle on.

The Driver Information Center may display one of the following:

- Service Steering Column Lock: Indicates an issue with the column lock feature. Have vehicle serviced.
- Steering Column is Locked: Indicates the steering column lock is active and there is an abnormal situation.
- No message will appear when the steering column lock is active during a remote start.
- Turn Steering Wheel, Start Vehicle Again: Indicates the driver must turn the steering wheel and restart the vehicle because the column lock is binding, the column locking device was unable to unlock the steering column, and the vehicle did not start.

  If you are unable to unlock the steering column:

1. Immediately turn the steering wheel from side to side to unbind the column lock.
2. Turn the vehicle off and open the driver door to reset the system.
3. Immediately turn the vehicle on and immediately turn the steering wheel side to side for about 15 seconds. It may take significant force to unlock the column.

To keep the steering column from binding, straighten the front wheels before turning off the vehicle.

Immobilizer Operation



This vehicle has a passive theft-deterrent system.

The system does not have to be manually armed or disarmed.

The vehicle is automatically immobilized when the vehicle is turned off.

The system is automatically disarmed when the ignition is turned from off to on.

The security light, in the instrument cluster, comes on if there is a problem with arming or disarming the theft-deterrent system.

The system has one or more remote keys matched to an immobilizer control unit in your vehicle. Only a correctly matched remote key will start the vehicle. If the remote key is ever damaged, you may not be able to start your vehicle.

NOT FOR RESALE

When trying to start the vehicle, the security light may come on briefly when the ignition is turned on. If the engine does not start and the security light stays on, there is a problem with the system. Turn the ignition off and try again.

If the vehicle will not change ignition modes (accessory mode, on, off), and the remote key appears to be undamaged, try another remote key. Or, you may try placing the remote key in the backup location. See *Remote Key Operation* ⇨ *14*.

If the ignition mode will not change with the other remote key or with the remote key in the backup location, your vehicle needs service. If the ignition does change modes, the first remote key may be faulty. See your dealer who can service the theft-deterrent system and have a new remote key programmed to the vehicle.

It is possible for the immobilizer system to learn new or replacement remote keys. Up to eight remote keys can be programmed for the vehicle. To program additional remote keys, see "Programming Remote Keys to the Vehicle" under *Remote Key Operation* ⇨ *14*.

Do not leave the remote key or device that disarms or deactivates the vehicle theft system in the vehicle.

Exterior Mirrors

Convex Mirrors

⚠ Warning

A convex mirror can make things, like other vehicles, look farther away than they really are. If you cut too sharply into the right lane, you could hit a vehicle on the right. Check the inside mirror or glance over your shoulder before changing lanes.

Standard Mirrors

If equipped, the passenger side mirror is convex shaped. A convex mirror surface is curved so more can be seen from the driver seat.

Trailer-Tow Mirrors

The upper portion of both the driver and passenger mirrors is flat.

The lower portion of both the driver and passenger mirrors is convex. A convex mirror surface is curved so more can be seen from the driver seat. The lower portion is adjusted manually.

Trailer-Tow Mirrors



Extending Mirrors

Trailer tow mirrors can extend out for better visibility when towing a trailer.

NOT FOR RESALE



If equipped, grasp the mirror housing firmly and pull back in one motion, arching slightly toward the rear of the vehicle.

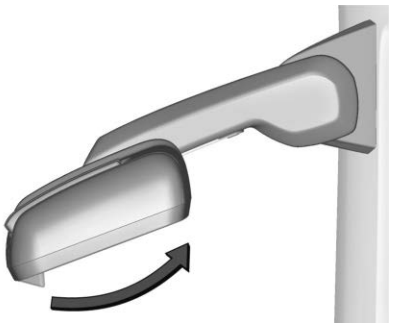

To return the mirror to its original position, reverse the motion.

Auxiliary Cargo Mirror Lights

If equipped, cargo mirror lights face rearward to provide more light on the sides of the vehicle, if needed. See *Exterior Cargo Lights* ⇨ *145*.

Advanced Trailering Vision System Side Cameras

If equipped, the Advanced Trailering Vision System side cameras are on the bottom of the outside mirrors. See *Surround Vision System* ⇨ *278*.

Power Mirrors



To adjust each mirror:

1. Press or to select the driver or passenger side mirror. The indicator light will illuminate.
2. Press the arrows on the control pad to move the mirror in the desired direction.
3. Adjust each outside mirror so that a little of the vehicle and the area behind it can be seen.
4. Press or again to deselect the mirror.

Turn Signal Indicator

If equipped, the mirror has turn signal indicator lights, which flash in the direction of the turn or lane change.

Task Lighting

If equipped, task lighting projects light from the outside mirrors to the sides of the vehicle. See *Task Lighting* ⇨ *144*.

Puddle Lights

If equipped, puddle lights project light from the bottom of the mirror to the area of ground below the driver and passenger doors. See *Entry Lighting* ⇨ *146* and *Exit Lighting* ⇨ *147*.

NOT FOR RESALE

Memory Mirrors

The vehicle may have memory mirrors. See *Memory Seats* ⇨ *51*.

Lane Change Alert (LCA)

The vehicle may have LCA. See *Lane Change Alert (LCA)* ⇨ *295*.

Folding Mirrors

Manual Folding Mirrors

If equipped, push the mirror toward the vehicle to fold. Push the mirror outward to return to its original position.

Manually fold the mirrors inward to prevent damage when going through an automatic car wash.

Power Folding Mirrors

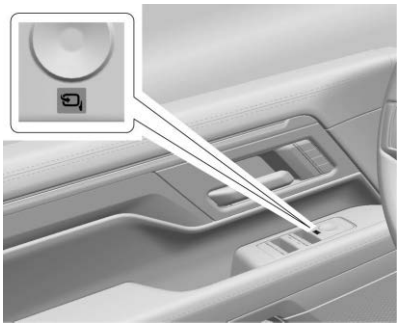

Crew/Double Cab Trim Shown, Other Models Similar

If equipped, press to power fold the mirrors. Press again to unfold.

Resetting the Power Folding Mirrors

Reset the power folding mirrors if:

- The mirrors are accidentally obstructed while folding.
- The mirrors are accidentally manually folded/unfolded.
- The mirrors will not stay in the unfolded position.
- The mirrors vibrate at normal driving speeds.

Fold and unfold the mirrors one time using the mirror controls to reset them to their normal position. A noise may be heard during the resetting of the power folding mirrors. This sound is normal after a manual folding operation.

Remote Mirror Folding

If equipped, press on the remote key to remotely fold the exterior mirrors. Press on the remote key to unfold. See *Remote Key Operation* ⇨ *14*.

This feature can be turned on or off. To view available settings from the infotainment screen, touch Settings > Vehicle > Comfort and Convenience.

Heated Mirrors

If equipped with heated mirrors:

REAR: Press to heat the outside mirrors.

If equipped with auto-dimming mirrors, the driver side mirror may defog more slowly than the passenger side.

NOT FOR RESALE

See “Rear Window Defogger” under *Dual Automatic Climate Control System* ⇨ *183*.

Automatic Dimming Mirror

If equipped, the driver outside mirror automatically adjusts for the glare of the headlights from behind. This feature comes on when the vehicle is started.

Reverse Tilt Mirrors

If equipped with reverse tilt mirrors and memory seats, the passenger and/or driver mirror tilts to a preselected position when the vehicle is in R (Reverse). This allows the curb to be seen when parallel parking.

The mirror(s) may move from their tilted position when:

- The vehicle is shifted out of R (Reverse) or remains in R (Reverse) for about 30 seconds.
- The vehicle is turned off.
- The vehicle is driven in R (Reverse) above a set speed.

To view available settings from the infotainment app screen, touch Settings > Vehicle > Comfort and Convenience.

Interior Mirrors

Interior Rearview Mirrors

Adjust the rearview mirror for a clear view of the area behind your vehicle.

Do not spray glass cleaner directly on the mirror. Use a soft towel dampened with water.

Manual Rearview Mirror

If equipped, push the tab forward for daytime use and pull it rearward for nighttime use to avoid glare from the headlights from behind.

Automatic Dimming Rearview Mirror

If equipped, the mirror will automatically reduce the glare of headlights of vehicles behind you. The dimming feature comes on when the vehicle is started.

Rear Camera Mirror

⚠ Warning

The Rear Camera Mirror has a limited view. Portions of the road, vehicles, and other objects may not be seen. Do not drive or park the vehicle using only this camera. Objects may appear closer than they are. Check the outside mirrors or glance over your shoulder when making lane changes or merging. Failure to use proper care may result in injury, death, or vehicle damage.

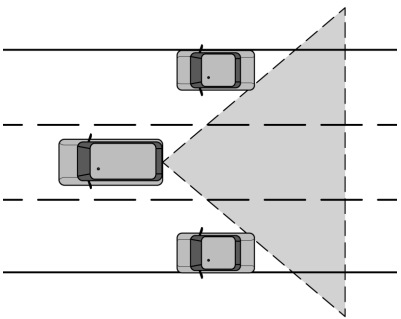

NOT FOR RESALE

If equipped, this automatic dimming mirror provides a wide angle camera view of the area behind the vehicle.

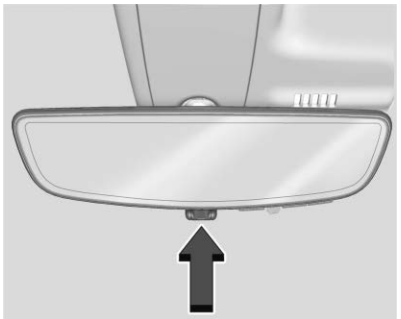

Pull the tab to turn on the display. Push the tab to turn it off. When off the mirror is automatic dimming. Adjust the mirror for a clear view of the area behind the vehicle while the display is off.

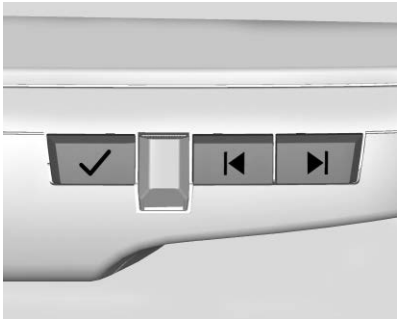

Press ✓ to scroll through the adjustment options.

Press ◀| and |▶ to adjust the settings using the indicators on the mirror. The indicators will remain visible for five seconds after the last button activation, and the settings will remain saved.

The adjustment options are:

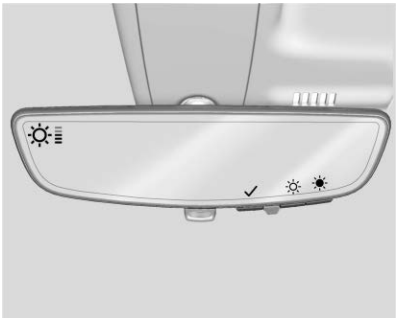

- Brightness

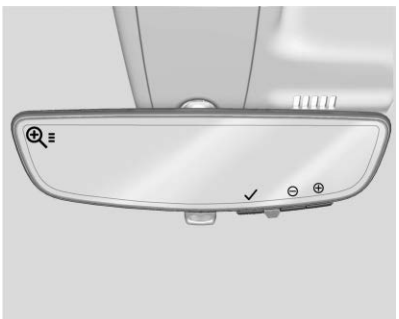

- Zoom

NOT FOR RESALE

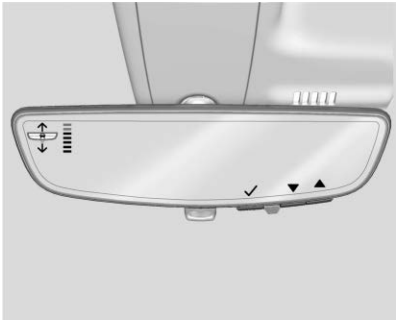

- Tilt

Troubleshooting

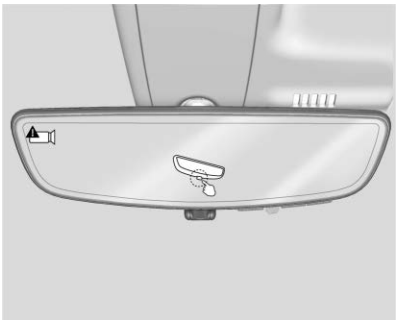

See your dealer for service if a blue screen and are displayed in the mirror, and the display shuts off. Also, push the tab as indicated to return to the automatic dimming mode.

The Rear Camera Mirror may not work properly or display a clear image if:

- There is glare from the sun or headlights. This may obstruct objects from view. If needed, push the tab to turn off the display.
- Dirt, snow, or other debris blocks the camera lens. Clean the lens with a soft damp cloth.
- The camera's mounting on the vehicle has been damaged, and/or the position or the mounting angle of the camera has changed.

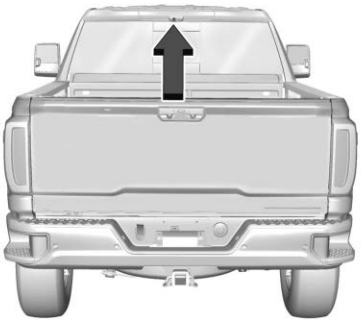

Windows

⚠ Warning

Never leave a child, a helpless adult, or a pet alone in a vehicle, especially with the windows closed in warm or hot weather. They can be overcome by the extreme heat and suffer permanent injuries or even death from heat stroke.



The vehicle aerodynamics are designed to improve fuel economy. This may result in a pulsing sound when either rear window is

NOT FOR RESALE

down and the front windows are up. To reduce the sound, open either a front window or the sunroof, if equipped.

Power Windows

⚠ Warning

Children could be seriously injured or killed if caught in the path of a closing window. Never leave the remote key in a vehicle with children. When there are children in the rear seat, use the window lockout switch to prevent operation of the windows. See *Keys* ⇨ *13*.

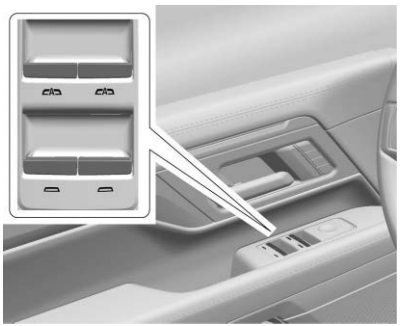

The power windows work when the vehicle is on, in accessory mode, or when Retained Accessory Power is active. See *Retained Accessory Power (RAP)* ⇨ *214*.

Using the window switch, press to open or pull to close the window.

The windows may be temporarily disabled if they are used repeatedly within a short time.

Window Lockout

This feature prevents rear seat passengers from opening the rear windows.

If equipped, to enable or disable this feature from the infotainment app screen, select Controls > Power Window Lockout.

Window Express Movement

This feature allows you to open all windows fully without holding the switches down. Press the switch down fully, then release to express open the window.

If equipped, pull the window switch up fully and quickly release to express close the window.

Briefly press or pull the window switch in the same direction to stop that window's express movement.

Window Automatic Reversal System

If equipped, the window automatic reversal system reverses and stops window movement if it detects an object in its path. Extreme cold or ice may cause the window to auto-reverse. The window will operate normally after the object or condition is removed.

Automatic Reversal System Override

⚠ Warning

If automatic reversal system override is active, the window will not reverse automatically. You or others could be injured and the window could be damaged. Before using automatic reversal system override, make sure that all people and obstructions are clear of the window path.

If conditions prevent the window from closing, when the vehicle is on, override the automatic reversal system by pulling and holding the window switch.

NOT FOR RESALE

Programming the Power Windows

If the battery is disconnected or discharged, programming may be necessary. To program an express-close window:

1. Close all doors.
2. Turn the vehicle on.
3. Partially open the window you want to program, then close it and continue to pull the switch briefly after the window has fully closed.
4. Open the window and continue to press the switch briefly after the window has fully opened.

Remote Window Operation

If equipped and enabled, this feature allows you to open all the windows remotely.

To view available settings and enable Remote Window Operation, from the infotainment app screen, touch Settings > Vehicle > Remote Lock, Unlock, Start.

To open the windows remotely, press twice and hold on the remote key. To close the driver or passenger windows, use the window switches.

Rear Windows

Power Sliding Rear Window

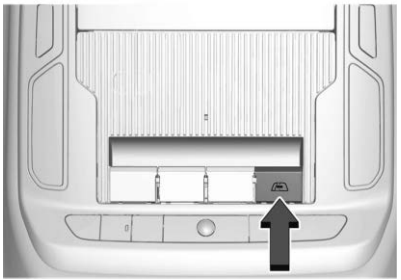

If equipped, the power sliding rear window works when the vehicle is on, in accessory mode, or Retained Accessory Power is active. See *Retained Accessory Power (RAP)* ⇨ *214*.

Press the switch to open the window and pull to close.

Sun Visors

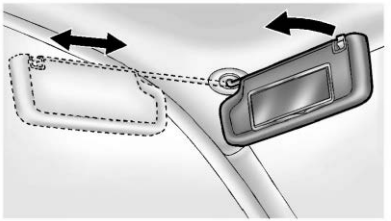

The driver and passenger sun visors block direct sunlight and reduce glare. If equipped, detach and pivot from the center mount to the side window, or extend along the rod for better coverage.

If equipped, swing the visor downward to access card holders or the vanity mirror.

NOT FOR RESALE

Roof

Sunroof

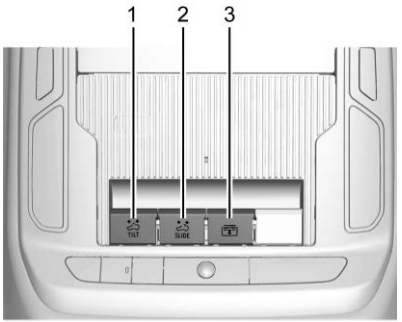

1. TILT Switch
2. SLIDE Switch
3. SUNSHADE Switch

If equipped, the sunroof operates when the ignition is on or in accessory mode, or when Retained Accessory Power is active. See *Retained Accessory Power (RAP)* ⇨ *214*.

The sunroof also has a sunshade, which can be closed to block sun rays. The sunshade can be opened and closed manually.

When the sunroof is opened, an air deflector will automatically raise. The air deflector will retract when the sunroof is closed.

Tilt Switch

Vent: From the closed position, press TILT (1) to vent the sunroof. Press TILT (1) to close the vent.

Slide Switch

Express-Open/Express-Close: To express-open the sunroof, fully press and release SLIDE (2). Press and release SLIDE (2) again to stop the movement. To express-close the sunroof, fully press and release SLIDE (2). Press and release SLIDE (2) again to stop the movement.

Open/Close (Manual Mode): To open the sunroof, press and hold SLIDE (2). Release SLIDE (2) to stop the movement. Press and hold SLIDE (2) to close the sunroof. Release SLIDE (2) to stop the movement.

Sunshade Switch

Express-Open/Express-Close: To express-open the sunshade, fully press and release (3). To express-close the sunshade, fully press and release (3). Press the switch again to stop it.

Open/Close (Manual Mode): To open the sunshade, press and hold (3) until the sunshade reaches the desired position. Press (3) to close the sunshade.

Comfort Position: For some models, wind noise is lowest when the sunroof is not fully open. For these models, the automatic operation will initially open the sunroof to a comfort position.

Automatic Reversal System

The sunroof has an automatic reversal system that is only active when the sunroof is operated in express-close mode.

If an object is in the path while express-closing, the reversal system will detect an object, stop, and open the sunroof slightly.

If frost or other conditions prevent closing, override the feature by closing the sunroof in manual mode. To stop movement, release SLIDE (2) for sunroof or (3) for sunshade.

NOT FOR RESALE



Dirt and debris may collect on the sunroof seal or in the track. This could cause an issue with sunroof operation or noise. It could also plug the water drainage system. Periodically open the sunroof and remove any obstacles or loose debris. Wipe the sunroof seal and roof sealing area using a clean cloth, mild soap, and water. Do not remove grease from the sunroof tracks.

NOT FOR RESALE

Seats and Restraints

Head Restraints
Head Restraints 46

Front Seats
Seat Adjustment 47
Center Seat 48
Power Seat Adjustment 48
Reclining Seatbacks 49
Lumbar Adjustment 50
Massage 51
Memory Seats 51
Heated and Ventilated Front Seats 54

Rear Seats
Rear Seat Reminder 55
Rear Seats 55
Heated Rear Seats 56

Seat Belts
Seat Belts 56
Buckle To Drive 57
How to Wear Seat Belts Properly 58
Lap-Shoulder Belt 60
Seat Belt Use During Pregnancy 62
Seat Belt Extender 63
Safety System Check 63
Seat Belt Care 63
Replacing Seat Belt System Parts After a Crash 64

Airbag System
Airbag System 64
Where Are the Airbags? 65
When Should an Airbag Inflate? 66
What Makes an Airbag Inflate? 67
How Does an Airbag Restrain? 67
What Will You See After an Airbag Inflates? 68
Passenger Sensing System 69
Servicing the Airbag-Equipped Vehicle 72
Adding Equipment to the Airbag-Equipped Vehicle 73
Airbag System Check 73
Replacing Airbag System Parts After a Crash 74

Child Restraints
Older Children 74
Infants and Young Children 76
Child Restraint Systems 78
Where to Put the Restraint 80
Lower Anchors and Tethers for Children (LATCH System) 81
Replacing LATCH System Parts After a Crash 92
Securing Child Restraints (With the Seat Belt in the Rear Seat) 92
Securing Child Restraints (With the Seat Belt in the Center Front Seat) 95
Securing Child Restraints (With the Seat Belt in the Front Passenger Seat) ... 96

NOT FOR RESALE

Head Restraints

Warning

With head restraints that are not installed and adjusted properly, there is a greater chance that occupants will suffer a neck/spinal injury in a crash. Do not drive until the head restraints for all occupants are installed and adjusted properly.

Front Seats

The front seats have adjustable head restraints in the outboard seating positions.



Adjust the head restraint so that the top of the restraint is at the same height as the top of the occupant's head. This position reduces the chance of a neck injury in a crash.

The height of the head restraint can be adjusted.



Pull the head restraint up to raise it. Try to move the head restraint to make sure that it is locked in place.

To lower the head restraint, press the button located on the top of the seatback, and push the head restraint down. After releasing the button, ensure the head restraint locks in place and is unable to move up or down.

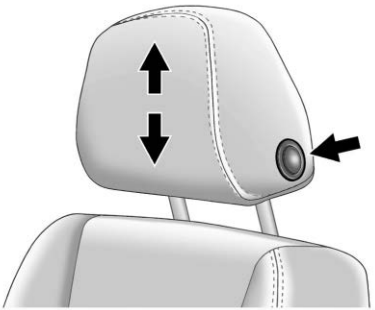

Uplevel

To raise or lower the head restraint, press the button located on the side of the head restraint, and pull up or push the head restraint down, and release the button. After releasing the button, ensure the head restraint locks in place and is unable to move up or down.

The front seat outboard head restraints are not removable.

Rear Head Restraints

The rear seat has adjustable head restraints in the outboard seating positions.

The rear seat outboard head restraints are designed to be folded.

NOT FOR RESALE

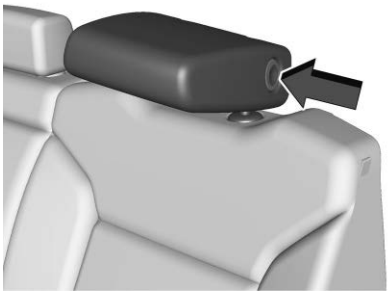

The head restraint can be folded forward to allow for better visibility when the rear seat is unoccupied.

Return the head restraint to the upright position until it locks into place. Push and pull on the head restraint to make sure that it is locked.

When an occupant or a child seat is in the seat, always return the head restraint to the upright position. Pull the head restraint up and push it rearward until it locks into place. Push and pull on the head restraint to make sure that it is locked.

Always adjust the head restraint so that the top of the restraint is at the same height as the top of the occupant's head.

If you are installing a child restraint in the rear seat, see *Lower Anchors and Tethers for Children (LATCH System)* ⇨ *81*.

Center Headrest

The rear seat has adjustable headrest in the center seating position.



Pull the headrest up to raise it. Try to move the head restraint [headrest] to make sure that it is locked in place.

To lower the headrest, press the button located on the top of the seatback and push the headrest down. After releasing the button, ensure the headrest locks in place and is unable to move up or down.

If you are installing a child restraint in the rear seat, see *Lower Anchors and Tethers for Children (LATCH System)* ⇨ *81*.

Front Seats

Seat Adjustment

⚠ Warning

You can lose control of the vehicle if you try to adjust a driver seat while the vehicle is moving. Adjust the driver seat only when the vehicle is not moving.



NOT FOR RESALE

To adjust a manual seat:

1. Lift the handle at the front of the seat cushion.
2. Move the seat forward or rearward to adjust the seat position.
3. Release the handle to stop the seat from moving.
4. Try to move the seat back and forth to be sure it is locked in place.

Seat Height Adjuster



If equipped, move the lever up or down to manually raise or lower the seat.

Center Seat

⚠ Warning

If a manual locking seat back is not fully locked, it could move forward during a sudden stop or crash. This movement could cause injury to the person sitting in the seat. Always push and pull on the seatbacks to ensure that they are fully locked.

If equipped, the center front seatback doubles as an armrest and cupholder/storage area for the driver and passenger when the center front seat is not used.



Pull the strap on the side of the center seatback to fold the center seatback. Do not use the center seatback as a seating position when the seatback is folded down.

To raise the seatback, push the seatback rearward until it locks in the upright position. Push and pull on the seatback to make sure it is locked.

Power Seat Adjustment

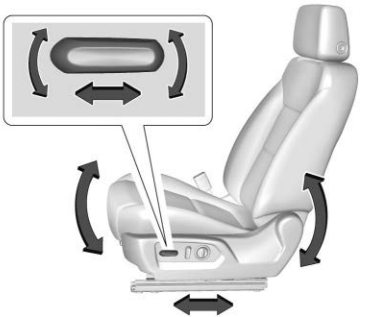

To adjust a power seat, if equipped:

- Move the seat forward or rearward by sliding the control forward or rearward.

NOT FOR RESALE

- Raise or lower the front part of the seat cushion by moving the front of the control up or down.
- Raise or lower the seat by moving the rear of the control up or down.

To adjust the seatback, see *Reclining Seatbacks* ⇨ *49*.

To adjust the lumbar support, see *Lumbar Adjustment* ⇨ *50*.

Some vehicles are equipped with a feature that activates a vibrating pulse alert in the driver seat to help the driver avoid crashes. See *Advanced Driver Assistance Systems* ⇨ *276*.

Reclining Seatbacks

⚠ Warning

Sitting in a reclined position when the vehicle is in motion can be dangerous.

Riding with the seatback reclined so that the seat belt is not resting against your body could cause neck, internal, or other serious injuries in a crash.

(Continued)

Warning (Continued)

Always drive and ride with your seatback in the upright position, sit well back, and wear the seat belt properly.



Do not have a seatback reclined if the vehicle is moving.

Manual Reclining Seatbacks

⚠ Warning

If either seatback is not locked, it could move forward in a sudden stop or crash. That could cause injury to the person sitting there. Always push and pull on the seatbacks to be sure they are locked.



To adjust a manual seatback:

1. Lift the lever.

   The seatback will automatically fold forward.

NOT FOR RESALE

2. To recline, move the seatback rearward to the desired position, then release the lever to lock the seatback in place.
3. Push and pull on the seatback to make sure it is locked.

To return the seatback to the upright position:

1. Lift the lever fully without applying pressure to the seatback, and the seatback will return to the upright position.
2. Push and pull on the seatback to make sure it is locked.

Power Reclining Seatbacks



To recline a power seatback, if equipped:

- Tilt the top of the control rearward to recline.
- Tilt the top of the control forward to raise.

Lumbar Adjustment

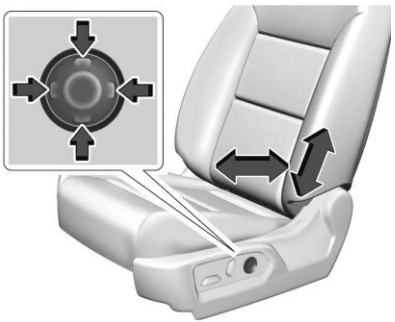

To adjust the lumbar support, if equipped:

- Press and hold the front or rear of the control to increase or decrease lumbar support.
- If equipped, press and hold the top or bottom of the control to raise or lower lumbar support.

Uplevel Seat Adjustment

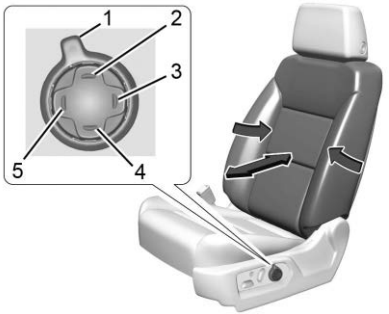

To adjust lumbar support, if equipped:

- Turn the Feature Select (1) to scroll to lumbar support on the infotainment display.
- Press Forward (5) or Rearward (3) to adjust lumbar forward or rearward.
- Press Up (2) or Down (4) to adjust lumbar up or down.

Bolster Support

To adjust back bolster support, if equipped:

NOT FOR RESALE

Turn the Feature Select (1) to scroll to bolster support on the infotainment display. Press Forward (5) or Rearward (3) to adjust bolster support inward or outward.

Massage

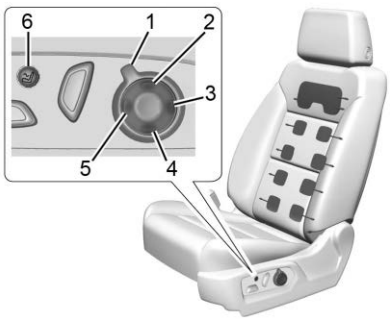

Driver Seat Shown, Passenger Seat Similar

If equipped, the vehicle must be on to use the massage feature.

To activate and adjust massage:

- Turn the Feature Select (1) to scroll to massage on the infotainment display.
- Press Up (2) or Down (4) to adjust massage type.
- Press Forward (5) or Rearward (3) to adjust the intensity.
- To turn massage off or to activate massage at last massage type and intensity settings, press the massage On/Off Control (6).

The massage feature will turn off after approximately 20 minutes. Press the massage On/Off Control (6) to restart the massage feature.

Memory Seats

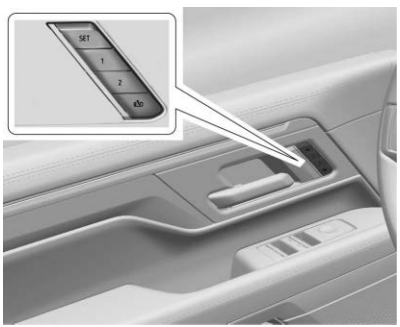

If equipped, drivers can save their unique driving positions and a shared exit position using the memory seat feature.

If equipped, profile-based preferences can also be saved and linked to the memory seat buttons.

Identifying Driver Number

The vehicle uses the remote key number 1 and 2 to identify the current driver. The Driver Information Center welcome message, "You are driver x for memory recalls," identifies the current remote key number. This message appears the first few times the vehicle is turned on with a different remote key. To ensure Seat Entry Memory works properly, save positions to the 1 or 2 memory button that match the driver number in the welcome message. To help identify remote key IDs, carry only one remote key when entering the vehicle. If the welcome message does not display, perform the following steps:

1. Move all keys and remote keys away from the vehicle.
2. Start the vehicle with another remote key. A Driver Information Center welcome message should display indicating the driver number of the other remote key. Turn the vehicle off and remove the other key or remote key from the vehicle.

NOT FOR RESALE

3. Start the vehicle with the initial key or remote key. The Driver Information Center welcome message should display the driver number of the initial remote key.

Saving Seating Positions

Read these instructions completely before saving memory positions.

To save preferred driving positions to 1 and 2:

1. Start the vehicle or to accessory mode. A Driver Information Center welcome message may indicate the driver number of the current remote key. See "Identifying Driver Number" previously in this section.
2. Adjust all available memory features to the desired driving position.
3. Press and release SET; an audible alert will sound.
4. Immediately upon releasing SET, press and hold memory button 1 or 2 matching the current remote key number until two audible alerts sound. If too much time passes between releasing SET and pressing 1 or 2, the two audible alerts will not sound indicating memory position were not saved. Repeat Steps 3 and 4 to try again.
5. Repeat Steps 1–4 for the other remote key 1 or 2 using the other 1 or 2 memory button.

If you are the only driver, you can save the preferred driving positions to both 1 and 2.

To save the common exit seating position to that is used by all drivers for Manually Recalling Seating Positions and Auto Seat Exit Memory Recall features, repeat Steps 1–4 using , the exit button.

Manually Recalling Seating Positions

To recall the positions previously saved, press and hold 1, 2, or the button, until the recall is complete.

Manual Memory recall movement for 1, 2 or buttons may be initiated and will complete to the saved memory position if the vehicle is in or out of P (Park).

Enabling Automatic Recalls

- Seat Entry Memory moves the driver seat to the selected 1 or 2 position when the vehicle is started. Select Settings > Vehicle > Seating Position > Driver Seat Entry Memory > ON or OFF. See "Auto Seat Entry Memory Recall" later in this section.
- Seat Exit Memory moves the driver seat to the preferred exit position of the button when the vehicle is turned off and the door is opened. Select Settings > Vehicle > Seating Position > Driver Seat Exit Memory > ON or OFF. See "Auto Seat Exit Memory Recall" later in this section.
- The other feature position settings will be stored and recalled with memory seats.

Auto Seat Entry Memory Recall

Seat Entry Memory will automatically begin movement to the seating positions of the 1 or 2 button corresponding to remote key number 1 or 2 detected by the vehicle when:

- The vehicle is turned on.
- Seating positions have previously been saved to the same 1 or 2 button. See "Saving Seating Positions" previously in this section.
- Seat Entry Memory is enabled. See "Enabling Automatic Recalls" previously in this section.
- The vehicle is in P (Park).
- The other feature position settings will be stored and recalled with memory seats.

NOT FOR RESALE

Seat Exit Memory will begin movement to the seating position of the button when:

- The driver turns off the vehicle and opens the door within a short time.
- A seating position has previously been saved to the button. See "Saving Seating Positions" previously in this section.
- Seat Exit Memory is enabled. See "Enabling Automatic Recalls" previously in this section.
- The vehicle is in P (Park).

Seat Exit Memory is not linked to the driver's remote key. The seating position saved to the button is used for all drivers.

Auto Seat Exit Memory Recall

Seat Exit Memory will begin movement to the seating position of the button when:

- The vehicle is turned off and the driver door is open or opened within a short time.
  - A seating position has previously been saved to the memory button. See "Saving Seating Positions" previously in this section.
  - Seat Exit Memory is enabled. See "Enabling Automatic Recalls" previously in this section.
  - The vehicle is in P (Park).

Seat Exit Memory is not linked to a remote key. The seating position saved to is used for all drivers.

Cancel Memory Seating Recalls

- During any memory recall:

  Press a power seat control

  Press SET memory button

  Press the power mirror control pad

  Press the power tilt and telescoping steering wheel control switch
- During Manual memory recall:

  Release 1, 2, or the memory button
- During Auto Seat Entry Memory Recall:

  Turn the vehicle off

  Press SET, 1, 2, or the memory buttons
- During Auto Seat Exit Memory Recall:

  Press SET, 1, 2, or the memory buttons

Obstructions

If something has blocked the seat while recalling a memory position, the recall may stop. Remove the obstruction and try the recall again. If the memory position still does not recall, see your dealer.

Profile Settings

Profile Switch saves preferred settings of up to 2 driver profiles.

If equipped, preferences may include:

- Driver seat memory
- Audio
- Automatic climate controls
- Linked accounts
- Vehicle and safety alerts
- Door lock/unlock
- Interior lighting

To save preferred profile settings:

1. Place the vehicle in P (Park).
2. Adjust all available memory features to the preferred settings.

NOT FOR RESALE

3. Press and release SET and select Link a Profile on the display or select Settings > Vehicle > Seating Position > Memory Button 1 Profile or Memory Button 2 Profile.
4. Select an option to link that profile to the seat preset button.

Press the memory seat button to activate the linked profile.

To remove Profile Switch from the memory seat button, select "None" as the driver profile.

Heated and Ventilated Front Seats

Warning

If temperature change or pain to the skin cannot be felt, the seat heater may cause burns. To reduce the risk of burns, use care when using the seat heater, especially for long periods of time. Do not place anything on the seat that insulates against heat, such as a blanket, cushion, cover, or similar item. This may cause the seat heater to overheat. An overheated seat heater may cause a burn or may damage the seat.

If equipped, select the icon on the climate display bar to launch the seat climate function. To operate, the engine must be running.

or : Select to heat the driver or passenger seatback only. The indicator light is red when heating.

or : Select to heat the driver or passenger seat cushion and seatback. The indicator light is red when heating.

or : Select to ventilate the driver or passenger seat. The indicator light is blue when ventilating.

Select the icon once for the highest setting. Each consecutive touch lowers the setting until it turns off. If the heated seats are on high, the level may automatically lower after approximately 30 minutes.

The passenger seat may take longer to heat up.

Auto Heated and Ventilated Seats

If the vehicle is equipped with auto heated or ventilated seats and the vehicle is on, this feature will automatically activate the heated or ventilated seats at the level required by the interior temperature.

The active high, medium, low, or off heated or ventilated seat level will be indicated by the heated or ventilated seat icons on the display. Use the heated or ventilated seat icons on the display to turn auto heated or ventilated seats off. If the passenger seat is unoccupied, the auto heated or ventilated seats feature will not activate that seat.

To enable or disable auto heated or ventilated seats, select Settings > Vehicle > Climate and Air Quality > Auto Cooled/Ventilated or Auto Heated Seats > ON or OFF.

Remote Start Heated and Ventilated Seats

During a remote start, the heated or ventilated seats, if equipped, can be turned on automatically. When it is cold outside, the heated seats turn on, and when it is hot outside the ventilated seats turn on. If the auto heated or ventilated seats feature, if equipped, is not turned on, the heated or ventilated seats may be canceled when the vehicle is turned on. If necessary, select the heated or ventilated seat icon to use the heated or ventilated seats after the vehicle is started.

NOT FOR RESALE

The heated and ventilated seats and heated steering wheel may cancel when the vehicle is started. These features can be manually selected after the vehicle is turned on.

The temperature performance of an unoccupied seat may be reduced. This is normal.

To enable or disable remote start heated or ventilated seats, select Settings > Vehicle > Remote Lock, Unlock, and Start > Remote Start Auto Heated Seats or Remote Start Auto Cooled/Ventilated Seats > ON or OFF. See *Remote Start* ⇨ *19*.

Rear Seats

Rear Seat Reminder

If equipped and enabled, the Driver Information Center displays a REAR SEAT REMINDER LOOK IN REAR SEAT message under certain circumstances. This message indicates there may be an item or passenger in the rear seat. Check the rear seat before exiting the vehicle.

Opening a second row door while the vehicle is on or up to 10 minutes before the vehicle is on, activates the feature. When the vehicle is turned off, the Driver Information Center message and an audible alert activate. The alert does not directly detect objects in the rear seat; instead, it detects when a rear door is opened and closed under certain conditions, indicating that there may be something in the rear seat.

The feature activates only once each time the vehicle is turned on and off. Reactivate it by opening and closing the second row doors. An alert may occur even when there is nothing in the rear seat; for example, if a child enters the vehicle through the rear door and leaves without the vehicle being shut off.

From the infotainment app screen, select Settings > Vehicle > Rear Seat Reminder to turn the feature on or off.

Rear Seats

Folding the Rear Seat Cushion

Either side of the rear seat cushion can be folded up for added cargo space.

⚠ Warning

Folding a rear seat with the seat belts still fastened may cause damage to the seat or the seat belts. Always unbuckle the seat belts and return them to their normal stowed position before folding a rear seat.

⚠ Warning

A seat belt that is improperly routed, not properly attached, or twisted will not provide the protection needed in a crash. The person wearing the belt could be seriously injured. After restoring the seat to the normal seating position, always check to be sure that the seat belts are properly routed and attached, and are not twisted.

Make sure that nothing is on the seat cushion.

NOT FOR RESALE



To fold the seat, slowly pull the seat cushion up.

To return the seat to the normal seating position, slowly pull the seat cushion down.

Heated Rear Seats

Warning

If you cannot feel temperature change or pain to the skin, the seat heater may cause burns. See the Warning under *Heated and Ventilated Front Seats* ⇨ *54*.

If equipped, the buttons are on the rear of the center console. To operate, the engine must be running.

Press or to heat the left or right outboard seat cushion. An indicator on the climate control display appears when this feature is on.

This feature turns on at the highest setting. With each press of the button, the heated seat changes to the next lower setting, and then the off setting. Three lights indicate the highest setting, and one light indicates the lowest. If the heated seats are on high, the level may automatically be lowered after approximately 30 minutes.

Remote Start Heated Seats

If equipped, the heated seats will turn on automatically during a remote start if it is cold outside. The heated seat indicators may come on during this operation. The heated seats may cancel when the vehicle is started. These features can be manually selected with the heated seat buttons after the vehicle is turned on.

The temperature performance of an unoccupied seat may be reduced. This is normal.

To enable or disable remote start heated seats, select Settings > Vehicle > Remote Lock, Unlock, and Start > Remote Start Auto Heated Seats > ON or OFF. See *Remote Start* ⇨ *19*.

Seat Belts

This section describes how to use seat belts properly, and some things not to do.

Warning

Do not let anyone ride where a seat belt cannot be worn properly. In a crash, if you or your passenger(s) are not wearing seat belts, injuries can be much worse than if you are wearing seat belts. You can be seriously injured or killed by hitting things inside the vehicle harder or by being ejected from the vehicle. In addition, anyone who is not buckled up can strike other passengers in the vehicle.

It is extremely dangerous to ride in a cargo area, inside or outside of a vehicle. In a collision, passengers riding in these areas are more likely to be seriously injured or killed. Do not allow passengers to ride in any area of the vehicle that is not equipped with seats and seat belts.

Always wear a seat belt, and check that all passenger(s) are restrained properly too.

NOT FOR RESALE

This vehicle has indicators as a reminder to buckle the seat belts. See *Seat Belt Reminders* ⇨ *116*.

Why Seat Belts Work

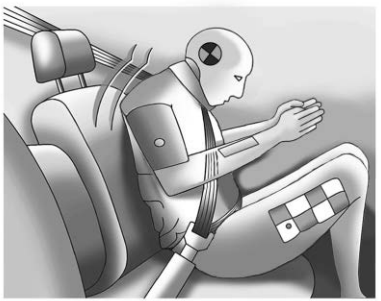

When riding in a vehicle, you travel as fast as the vehicle does. If the vehicle stops suddenly, you keep going until something stops you. It could be the windshield, the instrument panel, or the seat belts!

When you wear a seat belt, you and the vehicle slow down together. There is more time to stop because you stop over a longer distance, and when worn properly, your strongest bones take the forces from the seat belts. That is why wearing seat belts makes such good sense.

Questions and Answers About Seat Belts

Q: Will I be trapped in the vehicle after a crash if I am wearing a seat belt?

A: You *could* be — whether you are wearing a seat belt or not. Your chance of being conscious during and after a crash, so you *can* unbuckle and get out, is *much* greater if you are belted.

Q: If my vehicle has airbags, why should I have to wear seat belts?

A: Airbags are supplemental systems only. They work *with* seat belts — not instead of them. Whether or not an airbag is provided, all occupants still have to buckle up to get the most protection.

Also, in nearly all states and in all Canadian provinces, the law requires wearing seat belts.

Buckle To Drive

If equipped, this feature delays the vehicle from shifting out of P (Park) when the driver seat belt is not buckled. The Buckle to Drive feature must be turned ON in the infotainment system to work. To turn the Buckle to Drive feature on or off, select Settings > Vehicle > Buckle to Drive. See *Teen Driver* ⇨ *174*, if equipped.

If the vehicle is on and the brake pedal is pressed with the vehicle in P (Park) but the driver seat belt is not buckled, a message displays in the Driver Information Center and the vehicle will be delayed from shifting out of P (Park). Buckle the driver seat belt to clear the message and shift out of P (Park). Shifting from P (Park) will be delayed once for each time the vehicle is started.

For some fleet vehicles, the feature is always ON and cannot be turned OFF in the infotainment system. The vehicle will be delayed from shifting from P (Park) each time the driver attempts to do so while the driver seat belt is not buckled. Turning the vehicle off then on will not change this condition.

On some models, Buckle to Drive may also delay shifting out of P (Park) if a front passenger seat belt is unbuckled. A message displays in the Driver Information Center. Buckle the front passenger seat belt to shift out of P (Park). This feature may delay the vehicle from shifting out of P (Park) if an object, such as a briefcase, handbag, grocery bag, laptop, or other electronic device, is on the front

NOT FOR RESALE

passenger seat. If this happens, remove the object from the seat or buckle the seat belt to shift out of P (Park).

If the driver, or on some vehicles, the present front passenger remains unbuckled, the Driver Information Center message will turn off after several seconds and the vehicle can be shifted out of P (Park). See “Seat Belts” and “Child Restraints” in the Index for information about the importance of proper restraint use.

If the driver seat belt or the front passenger seat belt is unbuckled when driving, the seat belt reminder audible alert and light(s) will come on. See *Seat Belt Reminders* ⇨ *116*. This feature may not function properly if the airbag readiness light is on. See *Airbag Readiness Light* ⇨ *118*.

How to Wear Seat Belts Properly

Follow these rules for everyone's protection.

There are additional things to know about seat belts and children, including smaller children and infants. If a child will be riding in the vehicle, see *Older Children* ⇨ *74* or *Infants and Young Children* ⇨ *76*. Review and follow the rules for children in addition to the following rules.

It is very important for all occupants to buckle up. Statistics show that unbelted people are hurt more often in crashes than those who are wearing seat belts.

There are important things to know about wearing a seat belt properly.

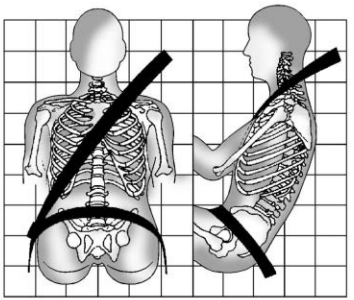

- Sit up straight and always keep your feet on the floor in front of you (if possible).
- Wear the lap part of the belt low and snug on the hips, just touching the thighs. In a crash, this applies force to the strong pelvic bones and you would be less likely to slide under the lap belt. If you slid under it, the belt would apply force on your abdomen. This could cause serious or even fatal injuries.
- Wear the shoulder belt over the shoulder and across the chest. These parts of the body are best able to take belt restraining forces. The shoulder belt locks if there is a sudden stop or crash.

⚠ Warning

You can be seriously injured, or even killed, by not wearing your seat belt properly.

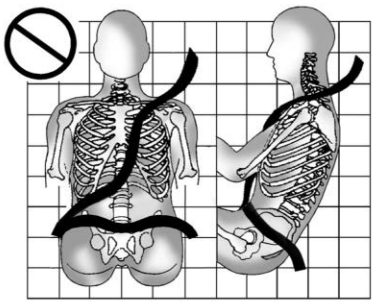

NOT FOR RESALE

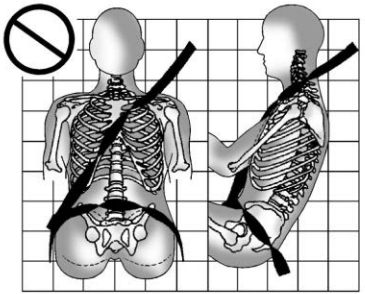

Never allow the lap or shoulder belt to become loose or twisted.

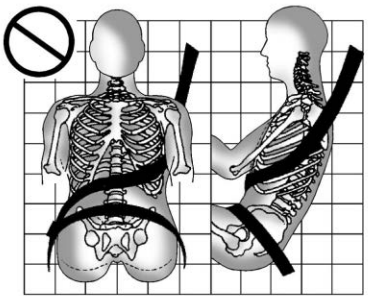

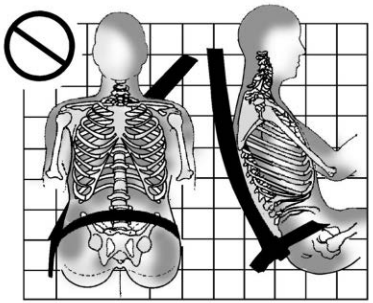

Never wear the shoulder belt under both arms or behind your back.

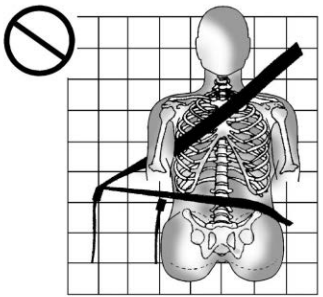

Always use the correct buckle for your seating position.

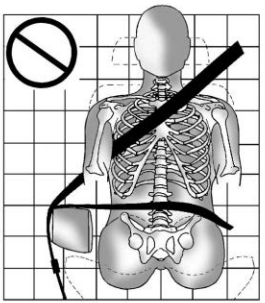

Never route the lap or shoulder belt over an armrest.

⚠ Warning

The seat belt can be pinched if it is routed under plastic trim on the seat, such as trim around the rear seatback folding handle or side airbag. In a crash, pinched seat belts might not provide adequate protection. Never allow seat belts to be routed under plastic trim pieces.

NOT FOR RESALE

⚠ Warning

You can be seriously injured or killed if the shoulder belt is worn behind your back, under your legs, or wrapped around your neck. The shoulder belt can tighten but cannot be loosened if it is locked. The shoulder belt locks when it is pulled all the way out of the retractor. It unlocks when the shoulder belt is allowed to go all the way back into the retractor, but it cannot do this if it is wrapped around you. You may have to cut the seat belt if it is locked and tightened around you.

Lap-Shoulder Belt

All seating positions in the vehicle have a lap-shoulder belt.

The following instructions explain how to wear a lap-shoulder belt properly.

1. Adjust the seat, if the seat is adjustable, so you can sit up straight. To see how, see "Seats" in the Index.

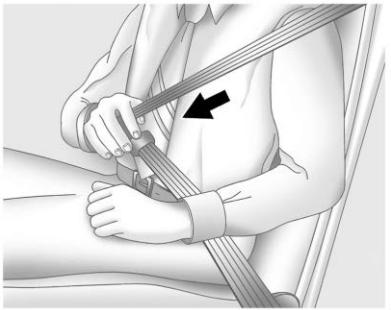

2. Pick up the latch plate and pull the belt across you. Do not let it get twisted.

   The lap-shoulder belt may lock if you pull the belt across you very quickly. If this happens, let the belt go back slightly to unlock it. Then pull the belt across you more slowly.

   If the shoulder portion of a passenger belt is pulled out all the way, the child restraint locking feature may be engaged. See *Child Restraint Systems* ➪ *78*. If this occurs, let the belt go back all the way and start again. If the locking feature stays engaged after letting the belt go back to stowed position on the seat, move the seat rearward or recline the seat until the shoulder belt retractor lock releases.

   Engaging the child restraint locking feature in the front outboard seating position may affect the passenger sensing system, if equipped. See *Passenger Sensing System* ➪ *69*.

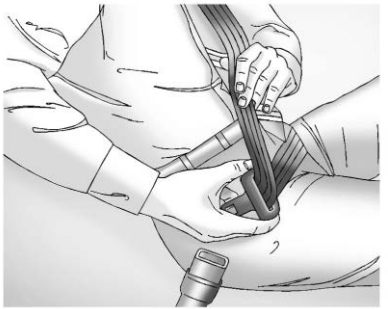

   If the webbing locks in the latch plate before it reaches the buckle, tilt the latch plate flat to unlock.

NOT FOR RESALE

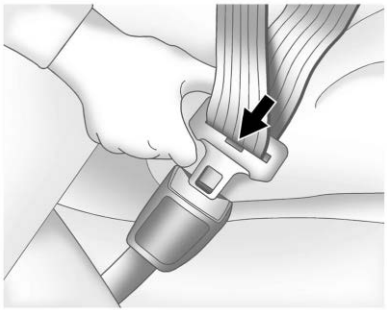

3. Push the latch plate into the buckle until it clicks.

   Pull up on the latch plate to make sure it is secure. If the belt is not long enough, see *Seat Belt Extender* ⇨ *63*.

   Position the release pushbutton on the buckle so that the seat belt could be quickly unbuckled if necessary.

   If equipped with a shoulder belt height adjuster, move it to the height that is right for you. See "Shoulder Belt Height Adjuster" later in this section for instructions on use and important safety information.

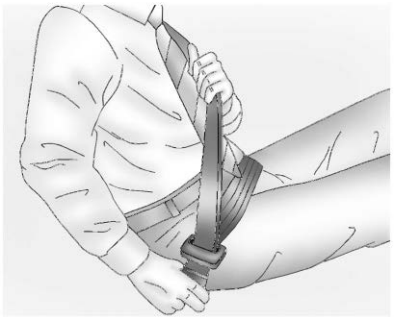

4. To make the lap part tight, pull up on the shoulder belt.

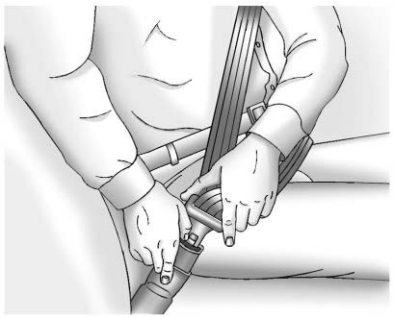

To unlatch the belt, push the release pushbutton on the buckle. The belt should return to its stowed position.

Always stow the seat belt slowly. If the seat belt webbing returns quickly to the stowed position, the retractor may lock and cannot be pulled out. If this happens, pull the seat belt straight out firmly to unlock the webbing, and then release it. If the webbing is still locked in the retractor, see your dealer.

Before a door is closed, be sure the seat belt is out of the way. If a door is slammed against a seat belt, damage can occur to both the seat belt and the vehicle.

Shoulder Belt Height Adjuster

The vehicle may have a shoulder belt height adjuster for the driver and front outboard passenger positions.

Adjust the height so the shoulder portion of the belt is on the shoulder and not falling off of it. The belt should be close to, but not contacting, the neck. Improper shoulder belt height adjustment could reduce the effectiveness of the seat belt in a crash. See *How to Wear Seat Belts Properly* ⇨ *58*.

NOT FOR RESALE



Push the release button to move the height adjuster to the desired position.

After the adjuster is set to the desired position, try to move it down without pushing the release button to make sure it has locked into position.

Seat Belt Pretensioners

This vehicle has seat belt pretensioners for the front row and second row outboard occupants. Although the seat belt pretensioners cannot be seen, they are part of the seat belt assembly. They can help tighten the seat belts during the early stages of a moderate to severe frontal, near frontal, or rear crash if the threshold conditions for pretensioner activation are met. Seat belt pretensioners can also help tighten the seat belts in a side crash or rollover event.

Pretensioners work only once. If the pretensioners activate in a crash, the pretensioners and probably other parts of the vehicle seat belt system will need to be replaced. See *Replacing Seat Belt System Parts After a Crash* ⇨ *64*.

Do not sit on the outboard seat belt while entering or exiting the vehicle or at any time while sitting in the seat. Sitting on the seat belt can damage the webbing and hardware.

Rear Seat Belt Comfort Guides

Rear seat belt comfort guides may provide added seat belt comfort for older children who have outgrown booster seats and for some adults. When installed on a shoulder belt, the comfort guide positions the shoulder belt away from the neck and head.

Comfort guides are available through your dealer for the rear outboard seating positions. Instructions are included with the comfort guides.

Seat Belt Use During Pregnancy

Seat belts work for everyone, including pregnant women. Like all occupants, they are more likely to be seriously injured if they do not wear seat belts.



A pregnant woman should wear a lap-shoulder belt, and the lap portion should be worn as low as possible, below the rounding, throughout the pregnancy.

The best way to protect the fetus is to protect the mother. When a seat belt is worn properly, it is more likely that the fetus will not be hurt in a crash. For pregnant women, as for anyone, the key to making seat belts effective is wearing them properly.

NOT FOR RESALE

Seat Belt Extender

⚠ Warning

Using a seat belt extender incorrectly can affect certain vehicle safety alerts and systems, potentially leading to unexpected vehicle movement. Always unfasten the seat belt by pushing on the vehicle-mounted buckle release button. Only use the extender-mounted release button to remove the extender after you are done using it. Follow all instructions that come with the seat belt extender.

If the vehicle seat belt will fasten around you, you should use it.

But if a seat belt is not long enough, your dealer will order you an extender. Only a genuine GM issued extender should be used. When you go in to order it, take the heaviest coat you will wear, so the extender will be long enough for you. To help avoid personal injury, do not let someone else use it, and use it only for the seat it is made to fit. The extender has been designed for adults. Never use it for securing child restraints. For more information on the proper use and fit of seat belt extenders, see the instruction sheet that comes with the extender.

Safety System Check

Periodically check the seat belt reminder, seat belts, buckles, latch plates, retractors, shoulder belt height adjusters (if equipped), and seat belt anchorages to make sure they are all in working order. Look for any other loose or damaged seat belt system parts that might keep a seat belt system from performing properly. See your dealer to have it repaired. Torn, frayed, or twisted seat belts may not protect you in a crash. Torn or frayed seat belts can rip apart under impact forces. If a belt is torn or frayed, have it replaced immediately. If a belt is twisted, it may be possible to untwist by reversing the latch plate on the webbing. If the twist cannot be corrected, ask your dealer to fix it.

Make sure the seat belt reminder light is working. See *Seat Belt Reminders* ⇨ *116*.

Keep seat belts clean and dry. See *Seat Belt Care* ⇨ *63*.

Seat Belt Care

Keep belts clean and dry.

⚠ Warning

Do not bleach or dye seat belt webbing. It may severely weaken the webbing. In a crash, they might not be able to provide adequate protection. Clean and rinse seat belt webbing only with mild soap and lukewarm water. Allow the webbing to dry.

Seat belts should be properly cared for and maintained.

Seat belt hardware should be kept dry and free of dust or debris. As necessary exterior hard surfaces and seat belt webbing may be lightly cleaned with mild soap and water. Ensure there is not excessive dust or debris in the mechanism. If dust or debris exists in the system after proper cleaning please see the dealer. Parts may need to be replaced to ensure proper functionality of the system.

NOT FOR RESALE

Replacing Seat Belt System Parts After a Crash

⚠ Warning

A crash can damage the seat belt system in the vehicle. A damaged seat belt system may not properly protect the person using it, resulting in serious injury or even death in a crash. To help make sure the seat belt systems are working properly after a crash, have them inspected and any necessary replacements made as soon as possible.

After a minor crash, replacement of seat belts may not be necessary. But the seat belt assemblies that were used during any crash may have been stressed or damaged. See your dealer to have the seat belt assemblies inspected or replaced.

New parts and repairs may be necessary even if the seat belt system was not being used at the time of the crash.

Have the seat belt pretensioners checked if the vehicle has been in a crash, or if the airbag readiness light stays on after you start the vehicle or while you are driving. See *Airbag Readiness Light* ⇨ *118*.

Airbag System

Here are the most important things to know about the airbag system:

⚠ Warning

You can be severely injured or killed in a crash if you are not wearing your seat belt, even with airbags. Airbags are designed to work with seat belts, not replace them. Also, airbags are not designed to inflate in every crash. In some crashes seat belts are the only restraint. See *When Should an Airbag Inflate?* ⇨ *66*.

Wearing your seat belt during a crash helps reduce your chance of hitting things inside the vehicle or being ejected from it. Airbags are "supplemental restraints" to the seat belts. Everyone in the vehicle should wear a seat belt properly, whether or not there is an airbag for that person.

⚠ Warning

Because airbags inflate with great force and faster than the blink of an eye, anyone who is up against, or very close to, any airbag when it inflates can be seriously injured or killed. Do not sit unnecessarily close to any airbag, as you would be if sitting on the edge of the seat or leaning forward. Seat belts help keep you in position before and during a crash. Always wear a seat belt, even with airbags. The driver should sit as far back as possible while still maintaining control of the vehicle. The seat belts and the front outboard passenger airbags are most effective when you are sitting well back and upright in the seat with both feet on the floor.

Occupants should not lean on or sleep against the door or side windows in seating positions with seat-mounted side impact airbags and/or roof-rail airbags.

NOT FOR RESALE

⚠ Warning

Children who are up against, or very close to, any airbag when it inflates can be seriously injured or killed. Always secure children properly in the vehicle. To read how, see *Older Children* ⇨ *74* or *Infants and Young Children* ⇨ *76*.

The vehicle has the following airbags:

- A frontal airbag for the driver
- A frontal airbag for the front outboard passenger
- A seat-mounted side impact airbag for the driver
- A seat-mounted side impact airbag for the front outboard passenger
- A roof-rail airbag for the driver and the passenger seated directly behind the driver
- A roof-rail airbag for the front outboard passenger and the passenger seated directly behind the front outboard passenger

All vehicle airbags have the word AIRBAG on the trim or on a label near the deployment opening.

For frontal airbags, the word AIRBAG is on the center of the steering wheel for the driver and on the instrument panel for the front outboard passenger.

For seat-mounted side impact airbags, the word AIRBAG is on the side of the seatback or side of the seat closest to the door.

For roof-rail airbags, the word AIRBAG is on the ceiling or trim.

Airbags are designed to supplement the protection provided by seat belts. Even though today's airbags are also designed to help reduce the risk of injury from the force of an inflating bag, all airbags must inflate very quickly to do their job.



There is an airbag readiness light on the instrument cluster, which shows the airbag symbol.

The system checks the airbag electrical system for malfunctions. The light tells you if there is an electrical problem. See *Airbag Readiness Light* ⇨ *118*.

Where Are the Airbags?

⚠ Warning

If something is between an occupant and an airbag, the airbag might not inflate properly or it might force the object into that person causing severe injury or even death. The path of an inflating airbag must be kept clear. Do not put anything between an occupant and an airbag, and do not attach or put anything on the steering wheel hub or on or near any other airbag covering.

Do not use seat accessories that block the inflation path of a seat-mounted side impact airbag.

Never secure anything to the roof of a vehicle with roof-rail airbags by routing a rope or tie-down through any door or window opening. If you do, the path of an inflating roof-rail airbag will be blocked.

NOT FOR RESALE



The driver frontal airbag is in the center of the steering wheel.



The front outboard passenger frontal airbag is in the passenger side instrument panel.



Driver Side Shown, Passenger Side Similar

The driver and front outboard passenger seat-mounted side impact airbags are in the side of the seatbacks closest to the door.



Driver Side Crew Cab Shown, Passenger Side Similar (Double and Single Cabs Similar)

The roof-rail airbags for the driver, front outboard passenger, and second row outboard passengers are in the ceiling above the side windows.

When Should an Airbag Inflate?

This vehicle is equipped with airbags. See *Airbag System* ⇨ *64*. Airbags are designed to inflate if the impact exceeds the specific airbag system's deployment threshold. Deployment thresholds are used to predict how severe a crash is likely to be in time for the airbags to inflate and help restrain the occupants. The

NOT FOR RESALE

vehicle has electronic sensors that help the airbag system determine the severity of the impact. Deployment thresholds can vary with specific vehicle design.

Frontal airbags are designed to inflate in moderate to severe frontal crashes to help reduce the potential for severe injuries, mainly to the driver's or front outboard passenger's head and chest.

Whether the frontal airbags will or should inflate is not based primarily on how fast the vehicle is traveling. It depends on what is hit, the direction of the impact, and how quickly the vehicle slows down.

Frontal airbags may inflate at different crash speeds depending on whether the vehicle hits an object straight on or at an angle, and whether the object is fixed or moving, rigid or deformable, narrow or wide.

Frontal airbags are not intended to inflate during vehicle rollovers, rear impacts, or many side impacts.

In addition, the vehicle has advanced technology frontal airbags. Advanced technology frontal airbags adjust the restraint according to either crash severity or occupant interaction.

Seat-mounted side impact airbags are designed to inflate in moderate to severe side crashes depending on the location of the impact. These airbags may also inflate in some moderate to severe frontal impacts. Seat-mounted side impact airbags are not designed to inflate in rollovers or rear impacts. A seat-mounted side impact airbag is designed to inflate on the side of the vehicle that is struck.

Roof-rail airbags are designed to inflate in moderate to severe side crashes depending on the location of the impact. In addition, these roof-rail airbags may inflate during a rollover or in a severe frontal impact. Roof-rail airbags are not designed to inflate in rear impacts. Both roof-rail airbags may inflate when either side of the vehicle is struck or if the sensing system predicts that the vehicle is about to roll over on its side, or in a severe frontal impact.

In any particular crash, no one can say whether an airbag should have inflated simply because of the vehicle damage or repair costs.

What Makes an Airbag Inflate?

In a deployment event, the sensing system sends an electrical signal triggering a release of gas from the inflator. Gas from the inflator fills the airbag causing the bag to break out of the cover. The inflator, the airbag, and related hardware are all part of the airbag module.

For airbag locations, see *Where Are the Airbags?* ⇨ *65*.

How Does an Airbag Restrain?

In moderate to severe frontal collisions, even belted occupants can contact the steering wheel or the instrument panel. In moderate to severe side collisions, even belted occupants can contact the inside of the vehicle.

Airbags supplement the protection provided by seat belts by distributing the force of the impact more evenly over the occupant's body.

Rollover capable roof-rail airbags are designed to help contain the head and chest of occupants in the outboard seating positions in the first and second rows. The rollover capable roof-rail airbags are designed to help reduce the risk of full or partial ejection in rollover events, although no system can prevent all such ejections.

But airbags would not help in many types of collisions, primarily because the occupant's motion is not toward those airbags. See *When Should an Airbag Inflate?* ⇨ *66*.

NOT FOR RESALE

Airbags should never be regarded as anything more than a supplement to seat belts.

What Will You See After an Airbag Inflates?

⚠ Warning

When an airbag inflates, there may be dust in the air. This dust could cause breathing problems for people with a history of asthma or other breathing trouble. To avoid this, everyone in the vehicle should get out as soon as it is safe to do so. If you have breathing problems but cannot get out of the vehicle after an airbag inflates, then get fresh air by opening a window or a door. If you experience breathing problems following an airbag deployment, you should seek medical attention.

After frontal and seat-mounted side impact airbags inflate, they quickly deflate, so quickly that some people may not even realize the airbags inflated. Roof-rail airbags may still be at least partially inflated for some time after they inflate. Some components of the airbag module may be hot for several minutes. For location of the airbags, see *Where Are the Airbags?* ⇨ *65*.

The parts of the airbag that come into contact with you may be warm, but not too hot to touch. There may be some smoke and dust coming from the vents in the deflated airbags. Airbag inflation does not prevent people from leaving the vehicle.

⚠ Warning

A crash severe enough to inflate the airbags may have also damaged important functions in the vehicle, such as the fuel system, brake and steering systems, etc. Even if the vehicle appears to be drivable after a moderate crash, there may be concealed damage that could make it difficult to safely operate the vehicle.

Use caution if you should attempt to restart the engine after a crash has occurred.

The vehicle has a feature that may automatically unlock the doors, turn on the interior lights and hazard warning flashers, and shut off the fuel system after the airbags inflate. The feature may also activate, without airbag inflation, after an event that exceeds a predetermined threshold.

This vehicle has a post-collision braking feature that may automatically engage to help slow your vehicle down after a crash. See *Post-Collision Braking (Secondary Collision Mitigation Braking)* ⇨ *231* for more information.

After turning the vehicle off and then on again, the fuel system will return to normal operation; the doors can be locked, the interior lights can be turned off, and the hazard warning flashers can be turned off using the controls for those features. If any of these systems are damaged in the crash they may not operate as normal.

In many crashes severe enough to inflate the airbag, windshields are broken by vehicle deformation. Additional windshield breakage may also occur from the front outboard passenger airbag.

NOT FOR RESALE

- Airbags are designed to inflate only once. After an airbag inflates, you will need some new parts for the airbag system. If you do not get them, the airbag system will not be there to help protect you in another crash. A new system will include airbag modules and possibly other parts. The service manual for the vehicle covers the need to replace other parts.
- The vehicle has a crash sensing and diagnostic module which records information after a crash. See *Vehicle Data Recording and Privacy* ⇨ *435* and *Event Data Recorders* ⇨ *436*.
- Let only qualified technicians work on the airbag system. Improper service can mean that an airbag system will not work properly. See your dealer for service.

Passenger Sensing System

⚠ Warning

A child in a rear-facing child restraint can be seriously injured or killed if the passenger frontal airbag inflates. This is because the

(Continued)

Warning (Continued)

back of the rear-facing child restraint would be very close to the inflating airbag. A child in a forward-facing child restraint can be seriously injured or killed if the passenger frontal airbag inflates and the passenger seat is in a forward position.

Even if the passenger sensing system has turned off the passenger frontal airbag, no system is fail-safe. No one can guarantee that an airbag will not deploy under some unusual circumstance, even though the airbag is turned off.

Never put a rear-facing child restraint in the front seat, even if the airbag is off. If securing a forward-facing child restraint in the front outboard passenger seat, always move the seat as far back as it will go. It is better to secure child restraints in the rear seat. Consider using another vehicle to transport the child when a rear seat is not available.

The vehicle has a passenger sensing system for the front outboard passenger position. The passenger airbag status indicator will light on the overhead console when the vehicle is started.



The passenger airbag status indicator may include text and/or symbols to indicate the passenger frontal airbag is either On or Off.

The passenger airbag status indicator indicating both On and Off will be visible during the system check.

When the system check is complete, the passenger airbag status indicator for either On or Off will be visible.

See *Passenger Airbag Status Indicator* ⇨ *118*.

The passenger sensing system turns off the front outboard passenger frontal airbag under certain conditions. No other airbag is affected by the passenger sensing system.

NOT FOR RESALE

The passenger sensing system works with sensors that are part of the front outboard passenger seat and seat belt. The sensors are designed to detect the presence of a properly seated occupant and determine if the front outboard passenger frontal airbag should be allowed to inflate or not.

According to accident statistics, children are safer when properly secured in a rear seat in the correct child restraint for their weight and size.

Whenever possible, children aged 12 and under should be secured in a rear seating position.

Never put a rear-facing child seat in the front. This is because the risk to the rear-facing child is so great, if the airbag inflates.

The passenger sensing system is designed to turn off the front outboard passenger frontal airbag if:

- The front outboard passenger seat is unoccupied.
- The system determines an infant is present in a child restraint.
- A front outboard passenger takes his/her weight off of the seat for a period of time.
- There is a critical problem with the airbag system or the passenger sensing system.

When the passenger sensing system has turned off the front outboard passenger frontal airbag, the passenger airbag status indicator for Off will light and stay lit as a reminder that the airbag is off. See *Passenger Airbag Status Indicator* ⇨ *118*.

The passenger sensing system is designed to turn on the front outboard passenger frontal airbag anytime the system senses that a person of adult size is sitting properly in the front outboard passenger seat. When the passenger sensing system has allowed the airbag to be enabled, the passenger airbag status indicator for On will light and stay lit as a reminder that the airbag is active.

For some children, including children in child restraints, and for very small adults, the passenger sensing system may or may not turn off the front outboard passenger frontal airbag, depending upon the person's seating posture and body build. Everyone in the vehicle who has outgrown child restraints should wear a seat belt properly — whether or not there is an airbag for that person.

⚠ Warning

If the airbag readiness light ever comes on and stays on, it means that something may be wrong with the airbag system. To help avoid injury to yourself or others, have the vehicle serviced right away. See *Airbag Readiness Light* ⇨ *118* for more information, including important safety information.

If the On Indicator Is Lit for a Child Restraint

The passenger sensing system is designed to turn off the front outboard passenger frontal airbag, if the system determines that an infant is present in a child restraint. If a child restraint has been installed and the passenger airbag status indicator for On is lit:

1. Turn the vehicle off.
2. Remove the child restraint from the vehicle.
3. Remove any additional items from the seat such as blankets, cushions, seat covers, seat heaters, or seat massagers.
4. Reinstall the child restraint following the directions provided by the child restraint manufacturer and refer to *Securing Child Restraints (With the Seat Belt in the Center*

NOT FOR RESALE

Front Seat) ⇨ *95 Securing Child Restraints (With the Seat Belt in the Rear Seat)* ⇨ *92 Securing Child Restraints (With the Seat Belt in the Front Passenger Seat)* ⇨ *96*.

Make sure the seat belt retractor is locked by pulling the shoulder belt all the way out of the retractor when installing the child restraint, even if the child restraint is equipped with a seat belt lock off. When the retractor lock is set, the belt can be tightened but not pulled out of the retractor.

5. If, after reinstalling the child restraint and restarting the vehicle, the passenger airbag status indicator for On is still lit, turn the vehicle off. Then slightly recline the vehicle seatback and adjust the seat cushion, if adjustable, to make sure that the vehicle seatback is not pushing the child restraint into the seat cushion. Also make sure the child restraint is not trapped under the vehicle head restraint. If this happens, adjust the head restraint. See *Head Restraints* ⇨ *46*.
6. Restart the vehicle.

   The passenger sensing system may or may not turn off the airbag for a child in a child restraint depending upon the child's size. It is better to secure the child restraint in a rear seat. Consider using another vehicle to transport the child when a rear seat is not available. Never put a rear-facing child restraint in the front seat, even if the passenger airbag status indicator for On is not lit.

If the Off Indicator Is Lit for an Adult-Sized Occupant

⚠ Warning

If the front outboard passenger airbag is turned off for an adult-sized occupant, the airbag will not be able to inflate and help protect that person in a crash, resulting in an increased risk of serious injury or even death. An adult-sized occupant should not ride in the front outboard passenger seat, if the passenger airbag OFF indicator is lit.



If a person of adult size is sitting in the front outboard passenger seat, but the passenger airbag status indicator for Off is lit, it could be because that person is not sitting properly in the seat or that the child restraint locking feature is engaged. Use the following steps to allow the system to detect that person and enable the front outboard passenger frontal airbag:

1. Turn the vehicle off.
2. Remove any additional material from the seat, such as blankets, cushions, seat covers, seat heaters, or seat massagers.
3. Place the seatback in the fully upright position.

NOT FOR RESALE

4. Have the person sit upright in the seat, centered on the seat cushion, with legs comfortably extended.
5. If the shoulder portion of the belt is pulled out all the way, the child restraint locking feature will be engaged. This may unintentionally cause the passenger sensing system to turn the airbag off for some adult-sized occupants. If this happens, unbuckle the belt, let the belt go back all the way, and then buckle the belt again without pulling the belt out all the way.
6. Restart the vehicle and have the person remain in this position for two to three minutes after the passenger airbag status indicator for On is lit.

Additional Factors Affecting System Operation

⚠ Warning

Stowing articles under the passenger seat or between the passenger seat cushion and seatback may interfere with the proper operation of the passenger sensing system.

Seat belts help keep the passenger in position on the seat during vehicle maneuvers and braking, which helps the passenger sensing system maintain the passenger airbag status. See “Seat Belts” and “Child Restraints” in the Index for additional information about the importance of proper restraint use.

A thick layer of additional material, such as a blanket or cushion, or aftermarket equipment such as seat covers, seat heaters, and seat massagers can affect how well the passenger sensing system operates. We recommend that you not use seat covers or other aftermarket equipment except when approved by GM for your specific vehicle. See *Adding Equipment to the Airbag-Equipped Vehicle* ⇨ *73* for more information about modifications that can affect how the system operates.

The passenger airbag status indicator for On may be lit if an object, such as a briefcase, handbag, grocery bag, laptop, or other electronic device, is put on an unoccupied seat. If this is not desired remove the object from the seat.

Servicing the Airbag-Equipped Vehicle

⚠ Warning

For up to 10 seconds after the vehicle is turned off and the battery is disconnected, an airbag can still inflate during improper service. You can be injured if you are close to an airbag when it inflates. Avoid yellow connectors. They are probably part of the airbag system. Be sure to follow proper service procedures, and make sure the person performing work for you is qualified to do so.

Airbags affect how the vehicle should be serviced. There are parts of the airbag system in several places around the vehicle. Your dealer and the service manual have information about servicing the vehicle and the airbag system. To purchase a service manual, see *Publication Ordering Information* ⇨ *433*.

NOT FOR RESALE

Adding Equipment to the Airbag-Equipped Vehicle

Adding accessories that change the vehicle's frame, bumper system, height, front end, or side sheet metal may keep the airbag system from working properly.

The operation of the airbag system can also be affected by changing, including improperly repairing or replacing, any parts of the following:

- Airbag system, including airbag modules, front or side impact sensors, sensing and diagnostic module, or airbag wiring
- Front seats, including stitching, seams, or zippers
- Seat belts
- Steering wheel, instrument panel, overhead console, ceiling trim, or pillar garnish trim
- Inner door seals, including speakers

Your dealer and the service manual have information about the location of the airbag modules and sensors, sensing and diagnostic module, and airbag wiring along with the proper replacement procedures.

In addition, the vehicle has a passenger sensing system for the front outboard passenger position, which includes sensors that are part of the passenger seat. The passenger sensing system may not operate properly if the original seat trim is replaced with non-GM covers, upholstery, or trim; or with GM covers, upholstery, or trim designed for a different vehicle. Any object, such as an aftermarket seat heater or a comfort-enhancing pad or device, installed under or on top of the seat fabric, could also interfere with the operation of the passenger sensing system. This could either prevent proper deployment of the passenger airbag(s) or prevent the passenger sensing system from properly turning off the passenger airbag(s). See *Passenger Sensing System* ⇨ *69*.

If the vehicle has rollover roof-rail airbags, see *Different Size Tires and Wheels* ⇨ *379* for additional important information.

If a snow plow is added to the vehicle, the airbags should still work properly. The airbag systems were designed to work properly under a wide range of conditions, including snow plowing with vehicles that have the optional snow plow prep package (RPO VYU). Do not change or defeat the snow plow's "tripping mechanism." If you do, it can damage the snow plow and the vehicle, and may cause an airbag deployment.

If the vehicle must be modified because you have a disability and have questions about whether the modifications will affect the vehicle's airbag system, or if you have questions about whether the airbag system will be affected if the vehicle is modified for any other reason, call Customer Assistance. See *Customer Assistance Offices* ⇨ *428*.

Airbag System Check

Caution
If an airbag covering is damaged, opened, or broken, the airbag may not work properly. Do not open or break the airbag coverings. If there are any opened or broken airbag coverings, have the airbag covering and/or airbag module replaced. For the location of the airbags, see *Where Are the Airbags?* ⇨ *65*. See your dealer for service.

NOT FOR RESALE

The airbag system does not need regularly scheduled maintenance or replacement. Make sure the airbag readiness light is working. See *Airbag Readiness Light* ⇨ *118*.

Replacing Airbag System Parts After a Crash

⚠ Warning

A crash can damage the airbag systems in the vehicle. A damaged airbag system may not properly protect you and your passenger(s) in a crash, resulting in serious injury or even death. To help make sure the airbag systems are working properly after a crash, have them inspected and any necessary replacements made as soon as possible.

If an airbag inflates, you will need to replace airbag system parts. See your dealer for service.

If the airbag readiness light stays on after the vehicle is started or comes on when you are driving, the airbag system may not work properly. Have the vehicle serviced right away. See *Airbag Readiness Light* ⇨ *118*.

Child Restraints

Older Children

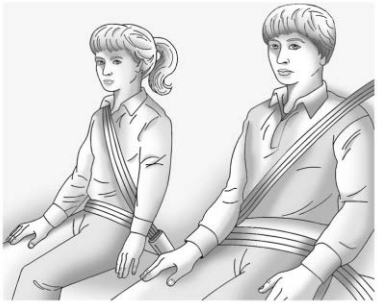

Older children who have outgrown booster seats should wear the vehicle seat belts. See *How to Wear Seat Belts Properly* ⇨ *58*.

The manufacturer instructions that come with the booster seat state the weight and height limitations for that booster. Use a booster seat with a lap-shoulder belt until the child passes the fit test below:

- Sit all the way back on the seat. Do the knees bend at the seat edge? If yes, continue. If no, return to the booster seat.
- Buckle the lap-shoulder belt. Does the shoulder belt rest on the shoulder? If yes, continue. If no, try using the rear seat belt comfort guide, if available. See "Rear Seat Belt Comfort Guides" under *Lap-Shoulder Belt* ⇨ *60*. If a comfort guide is not available, or if the shoulder belt still does not rest on the shoulder, then return to the booster seat.
- Does the lap belt fit low and snug on the hips, touching the thighs? If yes, continue. If no, return to the booster seat.
- Can proper seat belt fit be maintained for the length of the trip? If yes, continue. If no, return to the booster seat.

NOT FOR RESALE

Q: What is the proper way to wear seat belts?

A: An older child should wear a lap-shoulder belt and get the additional restraint a shoulder belt can provide. The shoulder belt should not cross the face or neck. The lap belt should fit snugly below the hips, just touching the top of the thighs. This applies belt force to the child's pelvic bones in a crash. It should never be worn over the abdomen, which could cause severe or even fatal internal injuries in a crash.

Also see "Rear Seat Belt Comfort Guides" under *Lap-Shoulder Belt* ⇨ *60*.

According to accident statistics, children are safer when properly restrained in a rear seating position.

In a crash, children who are not buckled up can strike other people who are buckled up, or can be thrown out of the vehicle. Older children need to use seat belts properly.

⚠ Warning

Never allow more than one child to wear the same seat belt. The seat belt cannot properly spread the impact forces. In a crash, they can be crushed together and seriously injured. A seat belt must be used by only one person at a time.



⚠ Warning

Never allow a child to wear the seat belt shoulder belt under both arms or behind their back. A child can be seriously injured by not wearing the lap-shoulder belt properly. In a crash, the child would not be restrained by the shoulder belt. The child could move too far forward increasing the chance of head and neck injury. The child might also slide under the lap belt. The belt force would then be applied right on the abdomen. That could cause serious or fatal injuries. The shoulder belt should go over the shoulder and across the chest.



NOT FOR RESALE

⚠ Warning

Children can be seriously injured or killed if the shoulder belt is worn behind their back, under their legs, or wrapped around their neck. The shoulder belt can tighten but cannot be loosened if it is locked. The shoulder belt locks when it is pulled all the way out of the retractor. It unlocks when the shoulder belt is allowed to go all the way back into the retractor, but it cannot do this if it is wrapped around the child. Never leave children unattended in a vehicle and never allow children to improperly wear, or play with, the seat belts.

Infants and Young Children

Everyone in a vehicle needs protection! This includes infants and all other children. Neither the distance traveled nor the age and size of the traveler changes the need, for everyone, to use safety restraints. In fact, the law in every state in the United States and in every Canadian province says children up to some age must be restrained while in a vehicle.

⚠ Warning

Children can be seriously injured or killed if the shoulder belt is worn behind their back, under their legs, or wrapped around their neck. The shoulder belt can tighten but cannot be loosened if it is locked. The shoulder belt locks when it is pulled all the way out of the retractor. It unlocks when the shoulder belt is allowed to go all the way back into the retractor, but it cannot do this if it is wrapped around the child. Never leave children unattended in a vehicle and never allow children to improperly wear, or play with, the seat belts.

Every time infants and young children ride in vehicles, they should have the protection provided by appropriate child restraints. Neither the vehicle seat belt system nor its airbag system is designed for them.

Children who are not restrained properly can strike other people, or can be thrown out of the vehicle.

⚠ Warning

Never hold an infant or a child while riding in a vehicle. Due to crash forces, an infant or a child will become so heavy it is not possible to hold it during a crash. For example, in a crash at only 40 km/h (25 mph), a 5.5 kg (12 lb) infant will suddenly become a 110 kg (240 lb) force on a person's arms. An infant or child should be secured in an appropriate child restraint.



NOT FOR RESALE

⚠ Warning

Children who are up against, or very close to, any airbag when it inflates can be seriously injured or killed. Never put a rear-facing child restraint in the front outboard seat. Secure a rear-facing child restraint in a rear seat. It is also better to secure a forward-facing child restraint in a rear seat. If you must secure a forward-facing child restraint in the front outboard seat, always move the front passenger seat as far back as it will go.



⚠ Warning

To reduce the risk of neck and head injury in a crash, infants and toddlers should be secured in a rear-facing child restraint until age two, or until they reach the maximum height and weight limits of their child restraint.

⚠ Warning

A young child's hip bones are still so small that the vehicle seat belt may not remain low on the hip bones, as it should. Instead, it may settle up around the child's abdomen. In a crash, the belt would apply force on a body area that is unprotected by any bony structure. This alone could cause serious or fatal injuries. To reduce the risk of serious or fatal injuries during a crash, young children should always be secured in an appropriate child restraint.

Child restraints are devices used to restrain, seat, or position children in the vehicle and are sometimes called child seats or car seats.

There are three basic types of child restraints:

- Forward-facing child restraints
- Rear-facing child restraints
- Belt-positioning booster seats

The proper child restraint for your child depends on their size, weight, and age, and also on whether the child restraint is compatible with the vehicle in which it will be used.

For each type of child restraint, there are many different models available. When purchasing a child restraint, be sure it is designed to be used in a motor vehicle and is designed by a genuine child restraint manufacturer. If it is, the child restraint will have a label saying that it meets federal motor vehicle safety standards.

The instruction manual that is provided with the child restraint states the weight and height limitations for that particular child restraint. In addition, there are many kinds of child restraints available for children with special needs.

NOT FOR RESALE

Child Restraint Systems

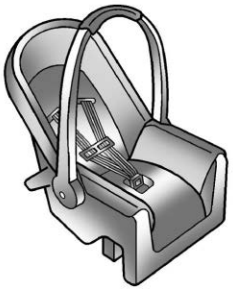

Rear-Facing Infant Restraint

A rear-facing child restraint provides restraint with the seating surface against the back of the infant.

The harness system holds the infant in place and, in a crash, acts to keep the infant positioned in the restraint.



Forward-Facing Child Restraint

A forward-facing child restraint provides restraint for the child's body with the harness.

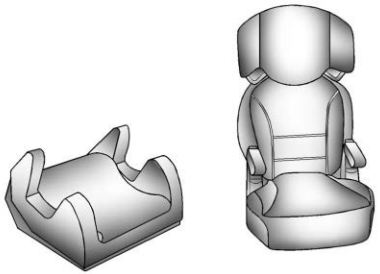

Booster Seats

A belt-positioning booster seat is used for children who have outgrown their forward-facing child restraint. Boosters are designed to improve the fit of the vehicle seat belt system until the child is large enough for the vehicle seat belts to fit properly without a booster seat. See the seat belt fit test in *Older Children* ⇨ *74*.

NOT FOR RESALE



Backless Booster

Backless booster fitment requirement:

Some backless booster seats are not suitable for rear seats that have oversized side seat bolsters, as they can push the backless booster forward from the seat back.

To use a backless booster:

1. Center the booster on the seat cushion.
2. Ensure the backless booster seat contacts the seat back.

If the backless booster does not meet the fit test described in Steps 1–2, select another booster seat.

Securing an Add-On Child Restraint in the Vehicle

⚠ Warning

Each top-tether anchor is designed to anchor only one child restraint. Do not attach more than one child restraint to a single top-tether anchor. The anchor may come loose or break, potentially causing personal injury, property damage, or death.

⚠ Warning

A child can be seriously injured or killed in a crash if the child restraint is not properly secured in the vehicle. Secure the child restraint properly in the vehicle using the vehicle seat belt or LATCH system, following the instructions that came with that child restraint and the instructions in this manual.

To help reduce the chance of injury, the child restraint must be secured in the vehicle. Child restraints must be secured in vehicle seats by the lap belt portion of a lap-shoulder belt, or by the LATCH system. See *Lower Anchors and Tethers for Children (LATCH System)* ⇨ *81* for more information. Never use a seat belt extender when installing a child restraint. Never use non-regulated aftermarket anchors or attachments to secure a child restraint. Children can be endangered in a crash if the child restraint is not properly secured in the vehicle.

When securing an add-on child restraint, see the following:

- Instruction labels provided on the child restraint
- Instruction manual provided with the child restraint
- This vehicle owner's manual

The child restraint instructions are important, so if they are not available, obtain a replacement copy from the manufacturer.

Keep in mind that an unsecured child restraint can move around in a collision or sudden stop and injure people in the vehicle. Be sure to properly secure any child restraint in the vehicle — even when no child is in it.

In some areas Certified Child Passenger Safety Technicians (CPSTs) are available to inspect and demonstrate how to correctly

NOT FOR RESALE

use and install child restraints. In the U.S., see the National Highway Traffic Safety Administration (NHTSA) website to locate the nearest child safety seat inspection station. For CPST availability in Canada, check with Transport Canada or the Provincial Ministry of Transportation office.

Securing the Child Within the Child Restraint

⚠ Warning

A child can be seriously injured or killed in a crash if the child is not properly secured in the child restraint. Secure the child properly following the instructions that came with that child restraint.

Where to Put the Restraint

According to accident statistics, children and infants are safer when properly restrained in an appropriate child restraint secured in a rear seating position.

Whenever possible, children aged 12 and under should be secured in a rear seating position.

Never put a rear-facing child restraint in the front. This is because the risk to the rear-facing child is so great if the airbag deploys.

⚠ Warning

A child in a rear-facing child restraint can be seriously injured or killed if the front passenger airbag inflates. This is because the back of the rear-facing child restraint would be very close to the inflating airbag. A child in a forward-facing child restraint can be seriously injured or killed if the front passenger airbag inflates and the passenger seat is in a forward position.

Even if the passenger sensing system has turned off the front passenger frontal airbag, no system is fail-safe. No one can guarantee that an airbag will not deploy under some unusual circumstance, even though it is turned off.

Secure rear-facing child restraints in a rear seat, even if the airbag is off. If you secure a forward-facing child restraint in the front seat, always move the front passenger seat as far back as it will go. It is better to secure the child restraint in a rear seat.

(Continued)

Warning (Continued)

See *Passenger Sensing System* ⇨ *69* for additional information.

⚠ Warning

A child in a child restraint in the center front seat can be badly injured or killed by the frontal airbags if they inflate. Never secure a child restraint in the center front seat. It is always better to secure a child restraint in a rear seat.

Do not use child restraints in the center front seat position.

If the vehicle does not have a rear seat that will accommodate a rear-facing child restraint, a rear-facing child restraint should not be installed in the vehicle, even if the airbag is off.

When securing a child restraint with the seat belts in a rear seat position, study the instructions that came with the child restraint to make sure it is compatible with this vehicle.

NOT FOR RESALE

Child restraints and booster seats vary considerably in size, and some may fit in certain seating positions better than others. Do not install a child restraint in any rear seating position where it cannot be installed securely.

Depending on where you place the child restraint and the size of the child restraint, you may not be able to access adjacent seat belts or LATCH anchors for additional passengers or child restraints. Adjacent seating positions should not be used if the child restraint prevents access to or interferes with the routing of the seat belt.

Adjust the seat in front of a child restraint to ensure proper installation according to the child restraint manual. Move the front seat forward to avoid contact between the child restraint and the seat or any accessories mounted to the seat.

Wherever a child restraint is installed, be sure to follow the instructions that came with the child restraint and secure the child restraint properly.

Keep in mind that an unsecured child restraint can move around in a collision or sudden stop and injure people in the vehicle. Be sure to properly secure any child restraint in the vehicle — even when no child is in it.

Lower Anchors and Tethers for Children (LATCH System)

The LATCH system secures a child restraint during driving or in a crash. LATCH attachments on the child restraint are used to attach the child restraint to the anchors in the vehicle. This system is designed to make installation of a child restraint easier.

In order to use the LATCH system in your vehicle, you need a child restraint that has LATCH attachments. LATCH-compatible rear-facing and forward-facing child seats can be properly installed using either the LATCH anchors or the vehicle's seat belts. Do not use both the seat belts and the LATCH anchorage system to secure a rear-facing or forward-facing child restraint.

Booster seats use the vehicle's seat belts to secure the child and the booster seat. If the manufacturer recommends that the booster seat be secured with the LATCH system, this can be done as long as the booster seat can be positioned properly and there is no interference with the proper positioning of the lap-shoulder belt on the child.

Make sure to follow the instructions that came with the child restraint, and also the instructions in this manual.

When installing a child restraint with a top tether, you must also use either the lower anchors or the seat belts to properly secure the child restraint. A child restraint must never be installed using only the top tether.

NOT FOR RESALE

For a forward-facing five-point harness child restraint where the combined weight of the child and restraint are up to 29.5 kg (65 lb), use either the lower LATCH anchorages with the top tether anchorage, or the seat belt with the top tether anchorage. Where the combined weight of the child and restraint are greater than 29.5 kg (65 lb), use the seat belt with the top tether anchorage only.

Recommended Methods for Attaching Child Restraints

Restraint Type	**Combined Weight of the Child + Child Restraint**	**Use Only Approved Attachment Methods Shown with an X**			
		LATCH – Lower Anchors Only	**Seat Belt Only**	**LATCH** – Lower Anchors and Top Tether Anchor	**Seat Belt and Top Tether Anchor**
Rear-Facing Child Restraint	Up to 29.5 kg (65 lb)	**X**	**X**		
Rear-Facing Child Restraint	Greater than 29.5 kg (65 lb)		**X**		
Forward-Facing Child Restraint	Up to 29.5 kg (65 lb)			**X**	**X**
Forward-Facing Child Restraint	Greater than 29.5 kg (65 lb)				**X**

See *Securing Child Restraints (With the Seat Belt in the Center Front Seat)* ⇨ *95 Securing Child Restraints (With the Seat Belt in the Rear Seat)* ⇨ *92 Securing Child Restraints (With the Seat Belt in the Front Passenger Seat)* ⇨ *96*.

Child restraints built after March 2014 are labeled with the maximum child weight, with which the LATCH system can be used for installing the child restraint.

The following explains how to attach a child restraint with these attachments in the vehicle.

Not all vehicle seating positions have lower anchors. In this case, the seat belt must be used (with top tether where available) to secure the child restraint. See *Securing Child Restraints (With the Seat Belt in the Center Front Seat)* ⇨ *95 Securing Child Restraints (With the Seat*

NOT FOR RESALE

Belt in the Rear Seat) ⇨ *92 Securing Child Restraints (With the Seat Belt in the Front Passenger Seat)* ⇨ *96*.

Lower Anchors

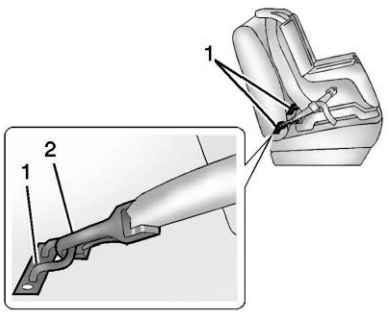

Lower anchors (1) are metal bars built into the vehicle. There are two lower anchors for each LATCH seating position that will accommodate a child restraint with lower attachments (2).

Top Tether Anchor

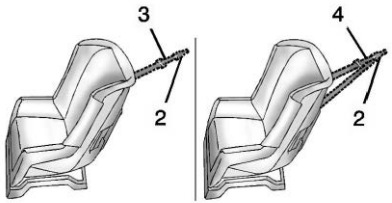

A top tether (3, 4) is used to secure the top of the child restraint to the vehicle. A top tether anchor is built into the vehicle. The top tether attachment hook (2) on the child restraint connects to the top tether anchor in the vehicle in order to reduce the forward movement and rotation of the child restraint during driving or in the event of a crash.

The child restraint may have a single tether (3) or a dual tether (4). Either will have a single attachment hook (2) to secure the top tether to the anchor.

Some child restraints with a top tether are designed for use with or without the top tether being attached. Others require the top tether always to be attached. In Canada, the law requires that forward-facing child restraints have a top tether, and that the tether be attached. Be sure to read and follow the instructions for your child restraint.

Lower Anchor and Top Tether Anchor Locations

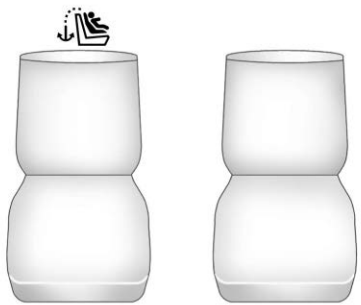

Regular Cab — Bucket Seat Only

NOT FOR RESALE

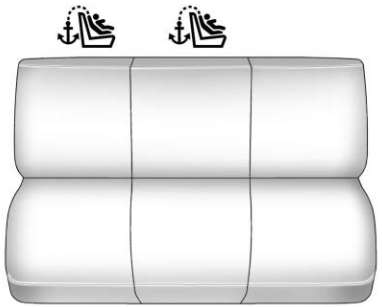

Regular Cab — Three-Passenger Front Seat

: Seating positions with top tether anchors.

Do not install a child restraint in the center front seating position. See *Securing Child Restraints (With the Seat Belt in the Center Front Seat)* ⇨ *95 Securing Child Restraints (With the Seat Belt in the Rear Seat)* ⇨ *92 Securing Child Restraints (With the Seat Belt in the Front Passenger Seat)* ⇨ *96* for more information.

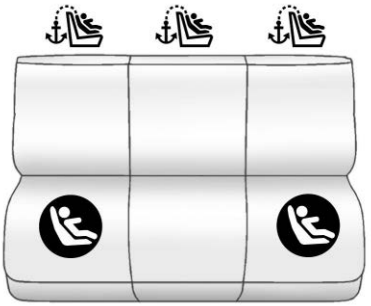

Double and Crew Cab Rear Seat

: Seating positions with top tether anchors.

: Seating positions with two lower anchors.



To assist in locating the lower anchors on double and crew cab models, each seating position with lower anchors has two labels near the crease between the seatback and the seat cushion.

Do not install a child restraint that requires lower anchors in the center rear seating position. *Securing Child Restraints (With the Seat Belt in the Center Front Seat)* ⇨ *95 Securing Child Restraints (With the Seat Belt in the Rear Seat)* ⇨ *92 Securing Child Restraints (With the Seat Belt in the Front Passenger Seat)* ⇨ *96*.



For regular cab models, there are top tether anchor symbols to assist you in locating the top tether anchors.

Do not install a child restraint in the center seating position. See *Securing Child Restraints (With the Seat Belt in the Center Front Seat)* ⇨ *95 Securing Child Restraints (With the Seat Belt in the Rear Seat)* ⇨ *92 Securing Child Restraints (With the Seat Belt in the Front Passenger Seat)* ⇨ *96* for more information.

NOT FOR RESALE

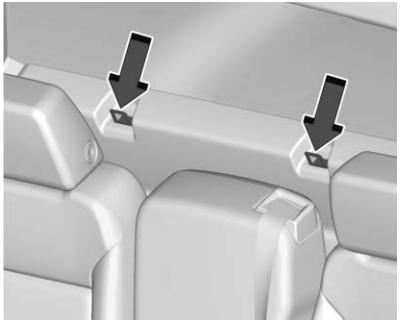

Regular Cab

For regular cab models, the top tether anchors are on the back panel behind the passenger seat(s) or center seat. Be sure to use an anchor directly behind the seating position where the child restraint will be placed.

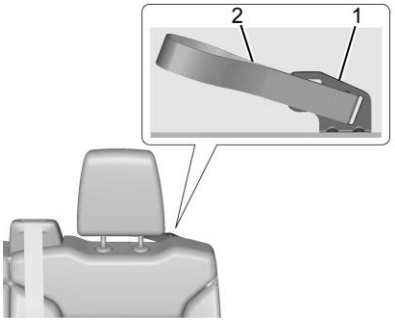

Driver Side Anchor and Loop (Double and Crew Cab)

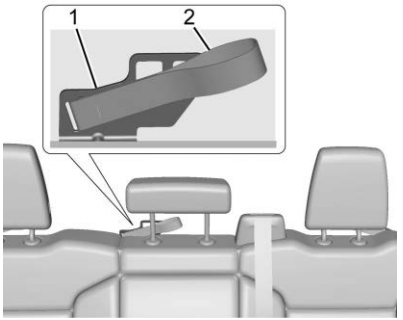

Center Anchor and Loop (Double and Crew Cab)

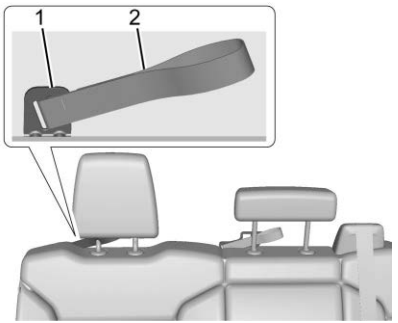

Passenger Side Loop (Double and Crew Cab)

NOT FOR RESALE

For double and crew cab models, the top tether is routed through loops (2) to the top tether anchors (1). Be sure to use the correct anchor for the seating position where the child restraint will be placed.

Be sure to read the following instructions to properly install a child restraint using these loops and anchors.

Do not secure a child restraint in a position without a top tether anchor if a national or local law requires that the top tether be attached, or if the instructions that come with the child restraint say that the top tether must be attached.

According to accident statistics, children and infants are safer when properly restrained in a child restraint system or infant restraint system secured in a rear seating position. See *Where to Put the Restraint* ⇨ *80* for additional information.

Securing a Child Restraint Designed for the LATCH System

⚠ Warning

A child could be seriously injured or killed in a crash if the child restraint is not properly attached to the vehicle using either the LATCH anchors or the vehicle seat belt. Follow the instructions that came with the child restraint and the instructions in this manual.

⚠ Warning

Do not attach more than one child restraint to a single anchor, except for the center top tether anchors in the crew cab models. Attaching more than one child restraint to a single anchor could cause the anchor or attachment to come loose or even break during a crash. A child or others could be injured. To reduce the risk of serious or fatal injuries during a crash, attach only one child restraint per anchor.

⚠ Warning

Children can be seriously injured or strangled if a shoulder belt is wrapped around their neck. The shoulder belt can tighten but cannot be loosened if it is locked. The shoulder belt locks when it is pulled all the way out of the retractor. It unlocks when the shoulder belt is allowed to go all the way back into the retractor, but it cannot do this if it is wrapped around a child's neck. If the shoulder belt is locked and tightened around a child's neck, the only way to loosen the belt is to cut it.

Buckle any unused seat belts behind the child restraint so children cannot reach them. Pull the shoulder belt all the way out of the retractor to set the lock, and tighten the belt behind the child restraint after the child restraint has been installed.

NOT FOR RESALE

Caution

Do not let the LATCH attachments rub against the vehicle's seat belts. This may damage these parts. If necessary, move buckled seat belts to avoid rubbing the LATCH attachments.

Do not fold the rear seat cushion when the seat is occupied. Do not fold the empty rear seat with a seat belt buckled. This could damage the seat belt or the seat. Unbuckle and return the seat belt to its stowed position, before folding the seat.

If you need to secure more than one child restraint in the rear seat, see *Where to Put the Restraint* ⇨ *80*.

Regular Cab Models

1. For models without a rear seat, forward-facing child restraints should only be installed in the right front seating position with belts and a top tether. See *Securing Child Restraints (With the Seat Belt in the Center Front Seat)* ⇨ *95 Securing Child Restraints (With the Seat Belt in the Rear Seat)* ⇨ *92 Securing Child Restraints (With the Seat Belt in the Front Passenger Seat)* ⇨ *96*.

   If the child restraint manufacturer recommends that the top tether be attached, adjust the top tether to its full length and attach it to the anchor. Refer to the child restraint instructions and the following steps:

   1.1 Find the top tether anchor.

   1.2 Route, attach, and tighten the top tether according to your child restraint instructions and the following instructions:

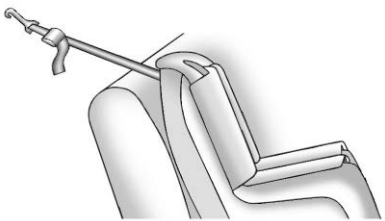

If the position you are using does not have a headrest or head restraint and you are using a single tether, route the tether over the seatback.

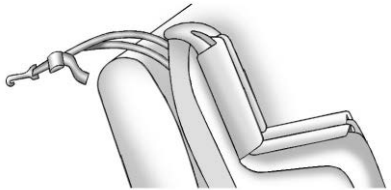

If the position you are using does not have a headrest or head restraint and you are using a dual tether, route the tether over the seatback.

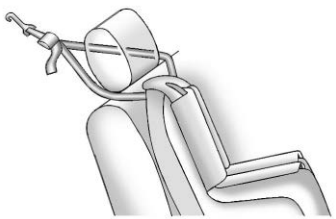

If the position you are using has an adjustable headrest or head restraint, adjust it accordingly to allow proper fitment. If you are

NOT FOR RESALE

using a dual tether, route the tether around the headrest or head restraint posts.

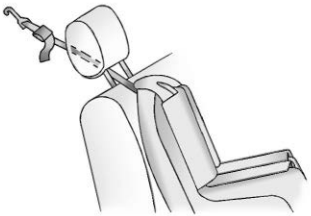

If the position you are using has an adjustable headrest or head restraint, adjust it accordingly to allow proper fitment. If you are using a single tether, route the tether in between the headrest or head restraint posts.

If the child restraint is installed next to a center seat, make sure the top tether does not interfere with the center seating position shoulder belt/retractor. If it does, find another suitable seating position to install the child restraint.

2. Make sure the child restraint top tether hook is completely closed and secured to the top tether anchor.
3. Secure the child restraint in the right front seating position with the vehicle belts. See *Securing Child Restraints (With the Seat Belt in the Center Front Seat)* ⇨ *95 Securing Child Restraints (With the Seat Belt in the Rear Seat)* ⇨ *92 Securing Child Restraints (With the Seat Belt in the Front Passenger Seat)* ⇨ *96*.
4. Before placing a child in the child restraint, make sure it is securely held in place. To check, firmly grip the child restraint at the LATCH path and attempt to move it side to side and back and forth. There should be no more than 2.5 cm (1 in) of movement for proper installation.

Double and Crew Cab Models

1. Attach and tighten the lower attachments to the lower anchors. If the child restraint does not have lower attachments or the desired seating position does not have lower anchors, secure the child restraint with the top tether and the seat belt. Refer to the child restraint manufacturer instructions and the instructions in this manual.
   - 1.1 Find the lower anchors for the desired seating position.
   - 1.2 Put the child restraint on the seat.
   - 1.3 Attach and tighten the lower attachments on the child restraint to the lower anchors.
2. For forward-facing child restraints, attach and tighten the top tether to the top tether anchor, if your vehicle has one. Follow the child restraint instructions and the vehicle LATCH anchor weight limits described at the beginning of this section, and the following steps:

NOT FOR RESALE

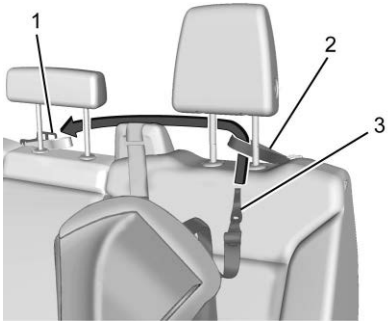

Rear Driver Side Position

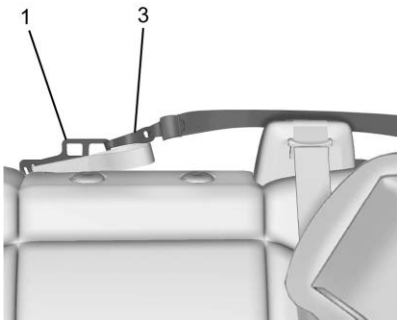

Rear Driver Side Position

2.1 For a top tether in the rear driver side position:

2.1.1 Remove the driver side head restraint and center headrest. See “Head Restraint or Headrest Removal and Reinstallation” later in this section.

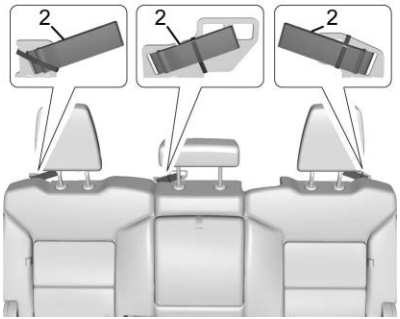

2.1.2 For first time use, remove and discard the rubber band from the top tether loop (2).

2.1.3 Route the top tether (3) through the rerouter loop (2) on the driver side.

2.1.4 Attach the top tether (3) to the driver side of the center top tether metal anchor (1).

2.1.5 Make sure the child restraint top tether hook is completely closed and secured to the top tether metal anchor.

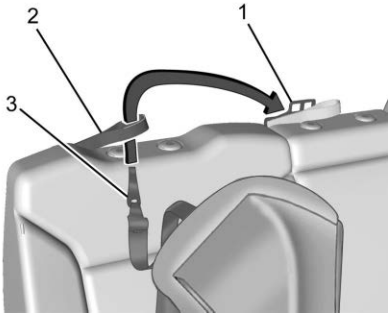

Rear Passenger Side Position

NOT FOR RESALE

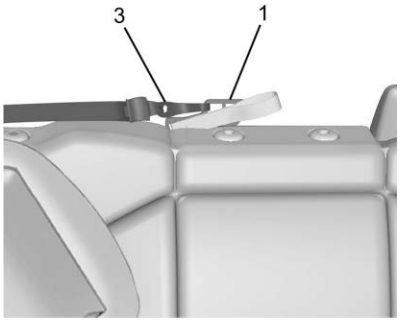

Rear Passenger Side Position

2.2 For a top tether in the rear passenger side position:

2.2.1 Remove the passenger side head restraint and center headrest. See "Head Restraint or Headrest Removal and Reinstallation" later in this section.

2.2.2 Route the top tether (3) through the rerouter loop (2). on the passenger side.

2.2.3 Attach the top tether (3) to the passenger side of the center top tether metal anchor (1).

2.2.4 Make sure the child restraint top tether hook is completely closed and secured to the top tether anchor.

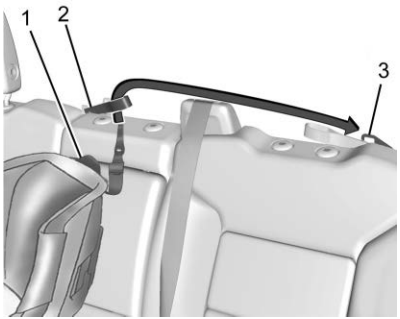

Rear Center Position

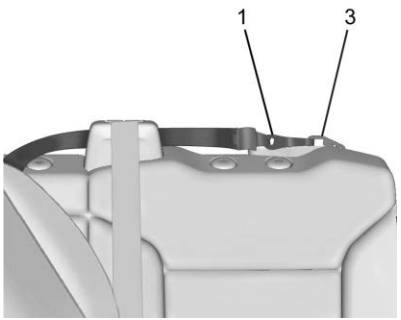

Rear Center Position

2.3 For a top tether in the rear center position:

2.3.1 Remove the driver side head restraint and center headrest. See "Head Restraint or Headrest Removal and Reinstallation" later in this section.

2.3.2 Route the top tether (1) through the rerouter loop (2).

2.3.3 Attach the top tether (1) to the driver side top tether metal anchor (3).

NOT FOR RESALE

2.3.4 Make sure the child restraint top tether hook is completely closed and secured to the top tether anchor.

3. Tighten the top tether per the child restraint manufacturer's instructions.

   When the top tether is properly tightened, the anchor (loop) may bend. This is normal and will not damage the vehicle.

   If child restraints are installed in both outboard positions, both top tethers can be attached to the center anchor. Top tethers can be attached for child restraints in all three rear seating positions at the same time, following the routing instructions above.

4. Before placing a child in the child restraint, make sure it is securely held in place. To check, firmly grip the child restraint at the LATCH path and attempt to move it side to side and back and forth. There should be no more than 2.5 cm (1 in) of movement for proper installation.

Head Restraint or Headrest Removal and Reinstallation

The rear outboard head restraints or center headrest can be removed if they interfere with the proper installation of the child restraint.

To remove the rear head restraints or center headrest:

1. For the outboard head restraints, fold the head restraint. See *Head Restraints* ⇨ *46*.



2. For the outboard head restraints, press the button on the head restraint post, and pull up on the head restraint. For the center, press both buttons at the same time, and pull up on the headrest.
3. Store the head restraint or headrest in a secure place.
4. When the child restraint is removed, reinstall the head restraint or headrest before the seating position is used.

⚠ Warning

With head restraints that are not installed and adjusted properly, there is a greater chance that occupants will suffer a neck/spinal injury in a crash. Do not drive until the head restraints for all occupants are installed and adjusted properly.

To reinstall the head restraint or headrest:



NOT FOR RESALE

1. Insert the head restraint or headrest posts into the holes in the top of the seatback. The notches on the posts must face the driver side of the vehicle.
2. Push the head restraint or headrest down. If necessary, press the height adjustment release button to further lower the headrest.
3. Try to move the head restraint or headrest to make sure that it is locked in place.

Replacing LATCH System Parts After a Crash

⚠ Warning

A crash can damage the LATCH system in the vehicle. A damaged LATCH system may not properly secure the child restraint, resulting in serious injury or even death in a crash. To help make sure the LATCH system is working properly after a crash, see your dealer to have the system inspected and any necessary replacements made as soon as possible.

If the vehicle has the LATCH system and it was being used during a crash, new LATCH system parts may be needed.

New parts and repairs may be necessary even if the LATCH system was not being used at the time of the crash.

Securing Child Restraints (With the Seat Belt in the Rear Seat)

When securing a child restraint with the seat belts in a rear seat position, study the instructions that came with the child restraint to make sure it is compatible with this vehicle.

If the child restraint has the LATCH system, see *Lower Anchors and Tethers for Children (LATCH System)* ⇨ *81* for how and where to install the child restraint using LATCH. If a child restraint is secured in the vehicle using a seat belt and it uses a top tether, see *Lower Anchors and Tethers for Children (LATCH System)* ⇨ *81* for top tether anchor locations.

Do not secure a child seat in a position without a top tether anchor if a national or local law requires that the top tether be anchored, or if the instructions that come with the child restraint say that the top tether must be anchored. Refer to the instructions that came with the child restraint and see *Lower Anchors and Tethers for Children (LATCH System)* ⇨ *81*.

In Canada, the law requires that forward-facing child restraints have a top tether, and that the tether be attached.

If the child restraint or vehicle seat position does not have the LATCH system, you will be using the seat belt to secure the child restraint. Be sure to follow the instructions that came with the child restraint.

If more than one child restraint needs to be installed in the rear seat, be sure to read *Where to Put the Restraint* ⇨ *80*.

Double Cab

1. Put the child restraint on the seat.
2. If the head restraint interferes with the proper installation of the child restraint, the head restraint may be removed. See "Head Restraint or Headrest Removal and Reinstallation" under *Lower Anchors and Tethers for Children (LATCH System)* ⇨ *81*.
3. Pick up the latch plate and run the lap and shoulder portions of the vehicle seat belt through or around the child restraint. Ensure the seat belt webbing is routed as

NOT FOR RESALE

directly as possible and is not caught on seat handles or plastic trim. The child restraint instructions will show you how.



4. Push the latch plate into the buckle until it clicks.

   Position the release pushbutton on the buckle, away from the child restraint, so that the seat belt could be quickly unbuckled if necessary.



5. Pull the shoulder belt all the way out of the retractor to set the lock. When the retractor lock is set, the belt can be tightened but not pulled out of the retractor.

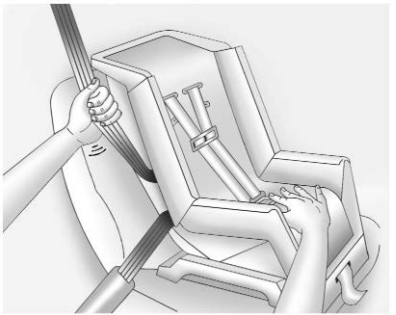

6. To tighten the belt, push down on the child restraint, pull the shoulder portion of the belt to tighten the lap portion of the belt, and feed the shoulder belt back into the retractor. When installing a forward-facing child restraint, it may be helpful to use your knee to push down on the child restraint as you tighten the belt.

   There must not be direct contact of the child restraint to the buckle release pushbutton. If there is contact, reposition the child restraint using the instructions that came with the child restraint. If there is still contact, use another seating position or child restraint.

   Try to pull the belt out of the retractor to make sure the retractor is locked. If the retractor is not locked, repeat Steps 5 and 6.

7. Tighten the top tether. See *Lower Anchors and Tethers for Children (LATCH System)* ⇨ *81*.

8. If the child restraint has a top tether, follow the child restraint manufacturer's instructions regarding the use of the top tether. See *Lower Anchors and Tethers for Children (LATCH System)* ⇨ *81*.

NOT FOR RESALE

9. Before placing a child in the child restraint, make sure it is securely held in place. To check, firmly grip the child restraint at the seat belt path and attempt to move it side to side and back and forth. When the child restraint is properly installed, there should be no more than 2.5 cm (1 in) of movement.

To remove the child restraint, unbuckle the vehicle seat belt and let it return to the stowed position. If the top tether is attached to a top tether anchor, disconnect it. Reinstall the head restraint or headrest before the seating position is used. See "Head Restraint or Headrest Removal and Reinstallation" under *Lower Anchors and Tethers for Children (LATCH System)* ⇨ *81* for additional information on installing the headrest properly.

Many child restraints are too wide to be correctly secured in the center rear seat, although some will fit there. If the center seat position is too narrow for the child restraint, secure it in a rear outboard seat position.

If a rear-facing child restraint is installed in the rear center seat, ensure that the second-row arm rest remains in the stowed (closed) position. If the arm rest cannot be stowed, or if the armrest can open fully, install the child restraint in another seating position.

Crew Cab

1. Put the child restraint on the seat.
2. If the head restraint interferes with the proper installation of the child restraint, the head restraint may be removed. See "Head Restraint or Headrest Removal and Reinstallation" under *Lower Anchors and Tethers for Children (LATCH System)* ⇨ *81*.
3. Pick up the latch plate and run the lap and shoulder portions of the vehicle seat belt through or around the child restraint. Ensure the seat belt webbing is routed as directly as possible and is not caught on seat handles or plastic trim. The child restraint instructions will show you how.



4. Push the latch plate into the buckle until it clicks.

   Position the release pushbutton on the buckle, away from the child restraint, so that the seat belt could be quickly unbuckled if necessary.



5. Pull the shoulder belt all the way out of the retractor to set the lock. When the retractor lock is set, the belt can be tightened but not pulled out of the retractor.

NOT FOR RESALE

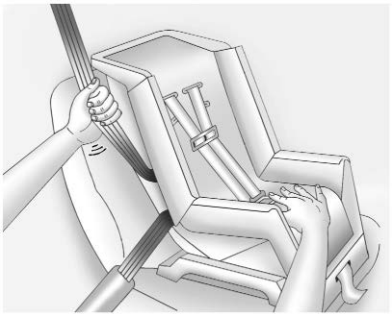

6. To tighten the belt, push down on the child restraint, pull the shoulder portion of the belt to tighten the lap portion of the belt, and feed the shoulder belt back into the retractor. When installing a forward-facing child restraint, it may be helpful to use your knee to push down on the child restraint as you tighten the belt.

   There must not be direct contact of the child restraint to the buckle release pushbutton. If there is contact, reposition the child restraint using the instructions that came with the child restraint. If there is still contact, use another seating position or child restraint.

   Try to pull the belt out of the retractor to make sure the retractor is locked. If the retractor is not locked, repeat Steps 5 and 6.

7. Tighten the top tether. See *Lower Anchors and Tethers for Children (LATCH System)* ⇨ *81*.

8. If the child restraint has a top tether, follow the child restraint manufacturer's instructions regarding the use of the top tether. See *Lower Anchors and Tethers for Children (LATCH System)* ⇨ *81* for more information on using the top tether anchors.

9. Before placing a child in the child restraint, make sure it is securely held in place. To check, firmly grip the child restraint at the seat belt path and attempt to move it side to side and back and forth. When the child restraint is properly installed, there should be no more than 2.5 cm (1 in) of movement.

To remove the child restraint, unbuckle the vehicle seat belt and let it return to the stowed position. If the top tether is attached to a top tether anchor, disconnect it.

Many child restraints are too wide to be correctly secured in the center rear seat, although some will fit there. If the center seat position is too narrow for the child restraint, secure it in a rear outboard seat position.

If a rear-facing child restraint is installed in the rear center seat, ensure that the second-row arm rest remains in the stowed (closed) position. If the arm rest cannot be stowed, or if the armrest can open fully, install the child restraint in another seating position.

Securing Child Restraints (With the Seat Belt in the Center Front Seat)

⚠ Warning

A child in a child restraint in the center front seat can be badly injured or killed by the frontal airbags if they inflate. Never secure a child restraint in the center front seat. It is always better to secure a child restraint in a rear seat.

Do not use child restraints in the center front seat position.

NOT FOR RESALE

Securing Child Restraints (With the Seat Belt in the Front Passenger Seat)

This vehicle has airbags. A rear seat is a safer place to secure a forward-facing child restraint. See *Where to Put the Restraint* ⇨ *80*.

In addition, the vehicle has a passenger sensing system which is designed to turn off the front outboard passenger frontal airbag under certain conditions. See *Passenger Sensing System* ⇨ *69* and *Passenger Airbag Status Indicator* ⇨ *118* for more information, including important safety information.

Never put a rear-facing child restraint in the front. This is because the risk to the rear-facing child is so great, if the airbag deploys.

⚠ Warning

A child in a rear-facing child restraint can be seriously injured or killed if the front outboard passenger frontal airbag inflates. This is because the back of the rear-facing child restraint would be very close to the

(Continued)

Warning (Continued)

inflating airbag. A child in a forward-facing child restraint can be seriously injured or killed if the front outboard passenger frontal airbag inflates and the passenger seat is in a forward position.

Even if the passenger sensing system has turned off the front outboard passenger frontal airbag, no system is fail-safe. No one can guarantee that an airbag will not deploy under some unusual circumstance, even though it is turned off.

Secure rear-facing child restraints in a rear seat, even if the airbag is off. If you secure a forward-facing child restraint in the front outboard passenger seat, always move the seat as far back as it will go. It is better to secure the child restraint in a rear seat.

See *Passenger Sensing System* ⇨ *69* for additional information.

If the vehicle does not have a rear seat that will accommodate a rear-facing child restraint, a rear-facing child restraint should not be installed in the vehicle, even if the airbag is off.

If the child restraint uses a top tether, see *Lower Anchors and Tethers for Children (LATCH System)* ⇨ *81* for top tether anchor locations.

Do not secure a child seat in a position without a top tether anchor if a national or local law requires that the top tether be anchored, or if the instructions that come with the child restraint say that the top tether must be anchored.

In Canada, the law requires that forward-facing child restraints have a top tether, and that the tether be attached.

When using the lap-shoulder belt to secure the child restraint in this position, follow the instructions that came with the child restraint and the following instructions:

1. Move the seat as far back as it will go before securing the forward-facing child restraint. Move the seat upward or the seatback to an upright position, if needed, to get a tight installation of the child restraint.

   When the passenger sensing system has turned off the front outboard passenger frontal airbag, the OFF indicator on the passenger airbag status indicator should

NOT FOR RESALE

light and stay lit when you start the vehicle. See *Passenger Airbag Status Indicator* ⇨ *118*.

2. Put the child restraint on the seat.
3. Pick up the latch plate and run the lap and shoulder portions of the vehicle seat belt through or around the restraint. Ensure the seat belt webbing is routed as direct as possible and is not caught on seat handles or plastic trim. The child restraint instructions will show you how.

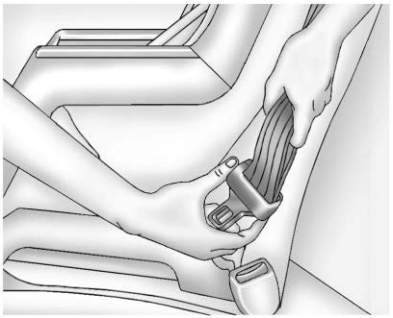

Tilt the latch plate to adjust the belt if needed.



4. Push the latch plate into the buckle until it clicks.

   Position the release pushbutton on the buckle, away from the child restraint, so that the seat belt could be quickly unbuckled if necessary.



5. Pull the shoulder belt all the way out of the retractor to set the lock. When the retractor lock is set, the belt can be tightened but not pulled out of the retractor.

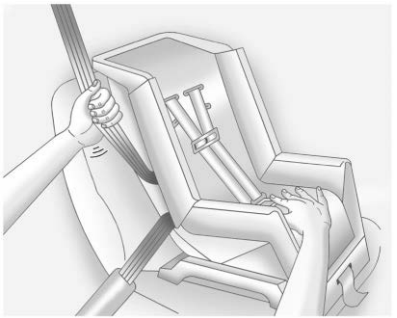

NOT FOR RESALE

6. To tighten the belt, push down on the child restraint, pull the shoulder portion of the belt to tighten the lap portion of the belt, and feed the shoulder belt back into the retractor.

   When installing a forward-facing child restraint, it may be helpful to use your knee to push down on the child restraint as you tighten the belt.

   There must not be direct contact of the child restraint to the buckle release pushbutton. If there is contact, move the seat upward and repeat prior installation steps. If there is still contact, reposition the child restraint using the instructions that came with the child restraint. If there is still contact, use another seating position or child restraint.

   Try to pull the belt out of the retractor to make sure the retractor is locked. If the retractor is not locked, repeat Steps 5 and 6.

7. If the vehicle does not have a rear seat and the child restraint manufacturer recommends using a top tether anchor, attach the top tether to the top tether anchor. Refer to the instructions that came with the child restraint and to *Lower Anchors and Tethers for Children (LATCH System)* ⇨ *81*.

8. Before placing a child in the child restraint, make sure it is securely held in place. To check, firmly grip the child restraint at the seat belt path and attempt to move it side to side and back and forth. When the child restraint is properly installed, there should be no more than 2.5 cm (1 in) of movement.

If the airbag is off, the OFF indicator in the passenger airbag status indicator will come on and stay on when the vehicle is started.

If a child restraint has been installed and the ON indicator is lit, see “If the On Indicator Is Lit for a Child Restraint” under *Passenger Sensing System* ⇨ *69*.

To remove the child restraint, unbuckle the vehicle seat belt and let it return to the stowed position.

Do not use the front center workstation tray table with a child restraint in the front passenger seat. See “Folding Tray” in *Center Console Storage* ⇨ *101*.

NOT FOR RESALE

Storage

Storage Compartments
Storage Compartments 99
Instrument Panel Storage 99
Glove Box 99
Cupholders 100
Underseat Storage 100
Center Console Storage 101
Floor Console Storage 102

Additional Storage Features
Cargo Anchor Points 102

Storage Compartments

⚠ Warning

Do not store heavy or sharp objects in storage compartments. In a crash, these objects may cause the cover to open and could result in injury.

Instrument Panel Storage

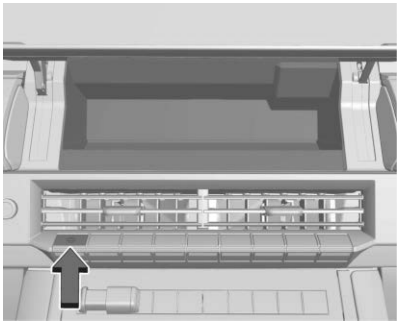

If equipped with instrument panel display storage, press the switch to raise the display, then press again to lower the display.

Glove Box

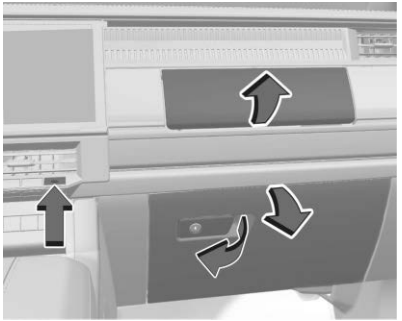

To open the upper glove box, if equipped, press the button on the center stack.

To open the lower glove box, pull the handle to the left. Use the vehicle key to lock or unlock.

NOT FOR RESALE

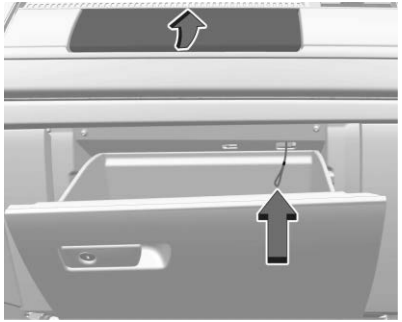

If the vehicle loses power, to manually open the upper glove box, open the lower glove box and pull on the string. If the string is not visible, you may need to reach in the opening to locate it.

Cupholders

Front

There may be cupholders on the center front seat console armrest.

Rear

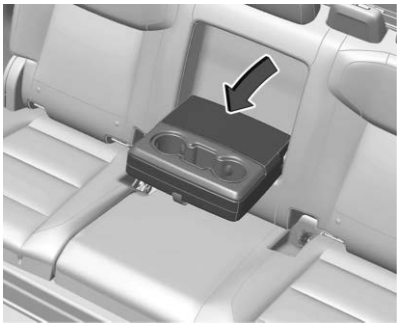

If equipped, pull the rear seat armrest down to access the cupholders.

Underseat Storage

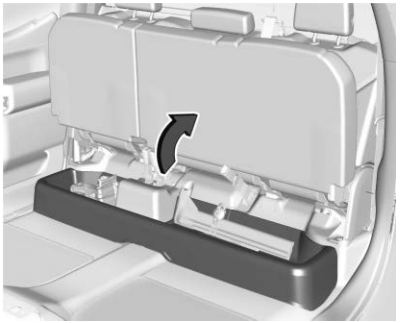

There may be storage under the rear passenger seat. Lift up on the seat bench to access. Push the seat bench toward the floor to close.

NOT FOR RESALE

Center Console Storage



Bench Seat

Pull the strap on the side of the center seatback to fold the center seatback. Do not use the center seatback as a seating position when the seatback is folded down.

To raise the seatback, push the seatback rearward until it locks in the upright position. Push and pull on the seatback to make sure it is locked.



Bench Seat

Press the latch and lift to open the bench seat.

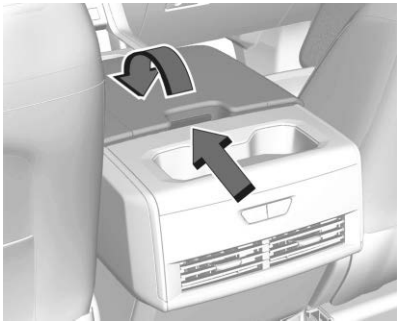

Folding Tray

There is a label on the center console near the latch. Press and lift the latch to access the folding tray. Do not use the folding tray while the vehicle is in (D) Drive or in motion.

NOT FOR RESALE

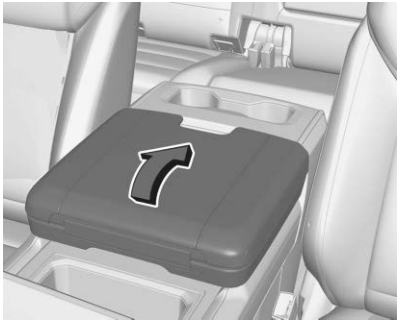

Folding Tray

Fold the tray back to the close position.

Floor Console Storage



If equipped with front center seat storage, unlock with the mechanical key in the remote key, press the latch, and lift to open.

Additional Storage Features

Cargo Anchor Points

⚠ Warning

Rain and snow can cause the cargo box to become very slippery. Therefore, always remove snow and ice from your shoes and the cargo box, and be careful not to slip when getting in and out of the cargo box.

Caution

The truck bed walls will collapse if the anchor points are overloaded.

NOT FOR RESALE

Standard and Long Box

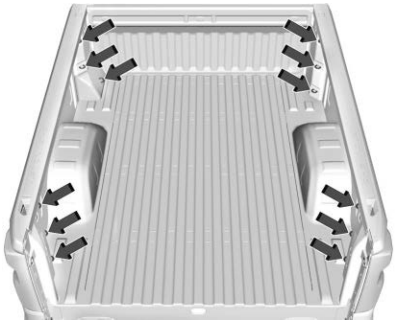

This vehicle is equipped with 12 fixed cargo anchor points.

Any of the 12 locations inside the truck bed can be used. The maximum load per corner is 227 kg (500 lb). For more information, see "Tailgate Cargo Anchor Points" in *Tailgate* ⇨ *24*.

CarbonPro Box

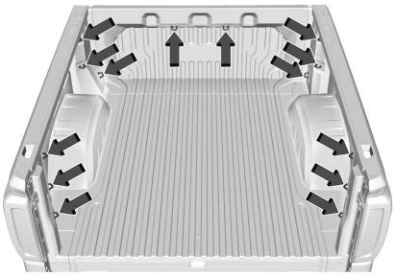

If equipped, this vehicle is equipped with 14 fixed cargo anchor points.

Any of the 14 locations inside the truck bed can be used. The maximum load per corner is 227 kg (500 lb).

Accessory anchor points

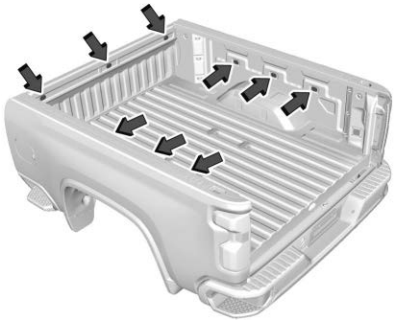

Additional Accessory Anchor Points

Any of the nine holes inside the truck bed can be used for anchor points.

Caution
The truck bed walls will collapse if the anchor points are overloaded.

NOT FOR RESALE

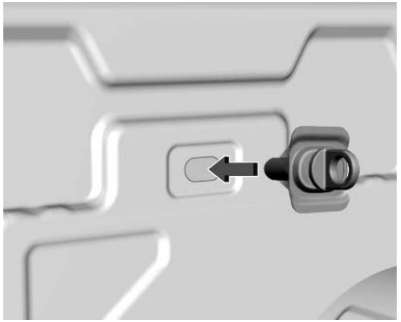

The maximum load is 113 kg (250 lb) per anchor point. See “Tailgate Cargo Anchor Points” in *Tailgate* ⇨ *24*.

To install:

1. Insert a anchor point loop assembly until it is flush with the truck bed wall.
2. Turn the anchor point loop clockwise to tighten. The anchor point will be hard to turn until the toggle moves past the installation point on the toggle guide.
3. Fasten the anchor point firmly by hand only. Do not use tools.

To remove:

1. Remove the anchor point loop completely by turning counterclockwise while holding the backing plate against the truck bed wall.
2. Pull the backing plate away from the truck bed wall until a click is heard. This locks the toggle into position on the toggle guide.
3. Push the backing plate against the truck bed wall. This allows the toggle nut to spin.
4. Remove the backing plate, toggle guide, and toggle nut from the truck bed wall completely.
5. Reinstall the anchor point loop through the backing plate into the toggle nut for reuse.

NOT FOR RESALE

Instruments and Controls

Controls

Steering Wheel Adjustment 106
Heated Steering Wheel 106
Horn 107
Windshield Wiper/Washer 107
Compass 108
Clock 108
Power Outlets 108
Wireless Charging 109

Warning Lights, Gauges, and Indicators

Warning Lights, Gauges, and Indicators ... 111
Instrument Cluster 112
Speedometer 113
Odometer 113
Trip Odometer 113
Tachometer 114
Fuel Gauge 114
Engine Oil Pressure Gauge 114
Engine Oil Temperature Gauge 115
Engine Coolant Temperature Gauge 115
Transmission Temperature Gauge 116
Voltmeter Gauge 116
Seat Belt Reminders 116
Airbag Readiness Light 118
Passenger Airbag Status Indicator 118
Charging System Light 119
Malfunction Indicator Light (Gasoline Check Engine Light) 119
Malfunction Indicator Light (Diesel Check Engine Light) 121
Brake System Warning Light 122
Electric Parking Brake Light 122
Service Electric Parking Brake Light 123
Antilock Brake System (ABS) Warning Light 123
Four-Wheel-Drive Light 123
Hill Descent Control Light 124
Lane Keep Assist (LKA) Light 124
Hands-On Steering Assist Light 124
Automatic Emergency Braking (AEB) Disabled Light 125
Vehicle Ahead Indicator 125
Pedestrian Ahead Indicator 125
Traction Off Light 125
Traction Control System (TCS)/ Electronic Stability Control Light 125
Electronic Stability Control (ESC) Off Light 126
Engine Coolant Temperature Warning Light 126
Driver Mode Control Light 127
Wait-to-Start Light (Diesel) 128
Tire Pressure Light 128
Engine Oil Pressure Light (Uplevel Cluster) 128
Low Fuel Warning Light 129
Diesel Exhaust Fluid (DEF) Warning Light (Diesel) 129
Security Light 129
High-Beam On Light 129
Front Fog Light Indicator 130
Lights On Reminder 130
Cruise Control Light 130
Adaptive Cruise Control Light 130
Super Cruise Light 131
Door Ajar Light 131

Information Displays

Driver Information Center (DIC) 131
Vehicle Status 131
Head-Up Display (HUD) 134

Vehicle Messages

Vehicle Messages 135
Engine Power Messages 136
Vehicle Speed Messages 136

Universal Remote System

Universal Remote System Programming (Garage Door Opener) 136
Universal Remote System Operation (Garage Door Opener) 138

NOT FOR RESALE

Controls

Steering Wheel Adjustment



To adjust the steering wheel:

1. Pull the lever down.
2. Move the steering wheel up or down.
3. Pull the lever up to lock the steering wheel in place.

Tilt and Telescoping Wheel



To adjust the tilt and telescoping steering wheel, if equipped:

1. Pull the lever down.
2. Move the steering wheel up or down.
3. Pull or push the steering wheel closer or away from you.
4. Pull the lever up to lock the steering wheel in place.

Do not adjust the steering wheel while driving.

Power Tilt and Telescoping Steering Wheel



To adjust the steering wheel, if equipped:

1. Press the control up or down to tilt the steering wheel up or down.
2. Press the control rearward or forward to move the steering wheel closer or away from you.

Do not adjust the steering wheel while driving.

Heated Steering Wheel

If equipped, press to turn the heated steering wheel on or off. A light near the button displays when the feature is turned on.

NOT FOR RESALE

Remote Start Heated Steering Wheel

If equipped with remote start, the heated steering wheel may turn on automatically during a remote start along with the heated seats when it is cold outside. The heated steering wheel indicator light may not come on.

See *Heated and Ventilated Front Seats* ⇨ *54*.

Horn

To sound the horn, press on the steering wheel.

Windshield Wiper/Washer

⚠ Warning

In freezing weather, do not use the washer until the windshield is warmed. Otherwise the washer fluid can form ice on the windshield, blocking your vision.

⚠ Warning

Before driving the vehicle, always clear snow and ice from the hood, windshield, washer nozzles, roof, and rear of the vehicle, including all lights and windows. Reduced visibility from snow and ice buildup could lead to a crash.

Caution

Exercise caution when using ice scrapers or snow brushes on wiper blades and arms. Excessive force can damage the parts which may not be covered under warranty.



The windshield wiper control is on the turn signal lever.

With the ignition on or in accessory mode, turn the band to select the wiper speed.

HI: Use for fast wipes.

LO: Use for slow wipes.

: Turn the band up for more frequent intermittent wipes or down for less frequent intermittent wipes.

OFF: Use to turn the wipers off.

: For a single wipe, push the button to the first stop position briefly and release. For several wipes, hold the button at the first stop position longer and release.

: Push the button beyond the first stop position to spray windshield washer fluid and activate the wipers. The front 360 degree viewing camera will also be washed, if equipped. The wipers will continue until the button is released or the maximum wash time is reached. When the windshield wiper button is released, additional wipes may occur depending on how long the windshield washer has been activated. See *Washer Fluid* ⇨ *347* for information on filling the windshield washer fluid reservoir.

Clear snow and ice from the entire windshield and wiper blades before using them. If frozen to the windshield, carefully loosen or thaw them. Damaged blades should be replaced. See *Wiper Blade Replacement* ⇨ *353*.

NOT FOR RESALE

Heavy snow or ice can overload the wiper motor.

Wiper Parking

If the ignition is turned off while the wipers are on LO, HI, or during intermittent wipes, they will immediately stop.

If the windshield wiper band is then moved to OFF before the driver door is opened or within 10 minutes, the wipers will restart and move to the base of the windshield.

If the ignition is turned off while the wipers are performing wipes due to windshield washing, the wipers continue to run until they reach the base of the windshield.

Rain Sense

If equipped with Rain Sense and the feature is turned on, a sensor near the top center of the windshield detects the amount of water on the windshield and controls the frequency of the windshield wiper based on the current sensitivity setting.

Keep this area of the windshield clear of debris to allow for best system performance.

To turn the Rain Sense feature on or off, see "Rain Sense Wipers" under Settings > Vehicle > Comfort and Convenience > Rain Sense > Enable/Disable.

If Rain Sense is enabled in Settings, turning the wiper lever to INT will activate Rain Sense.

Compass

The vehicle may have a compass display on the Driver Information Center. The compass receives its heading and other information from the Global Positioning System (GPS) antenna, StabiliTrak/Electronic Stability Control, and vehicle speed information.

The compass system can operate for a limited distance or degrees of turn before needing an update from the GPS satellites. When the compass display shows CAL, drive the vehicle to a clear, unobstructed view of the sky in all directions. The system will automatically search for a GPS signal and provide a heading again when the link to the satellites is re-established.

Clock

Set the time and date using the infotainment system. See "Date/Time" under *Settings* ⇨ *171*.

Power Outlets

Power Outlet 110/120-Volt Alternating Current

If equipped, the vehicle has alternating current power outlets.

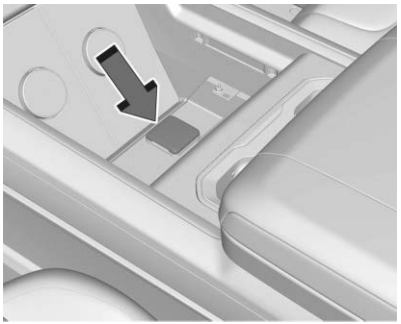

With Bucket Seats

NOT FOR RESALE

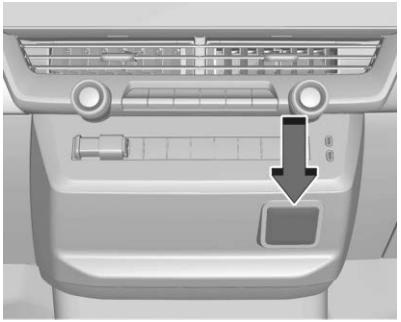

Without Bucket Seats

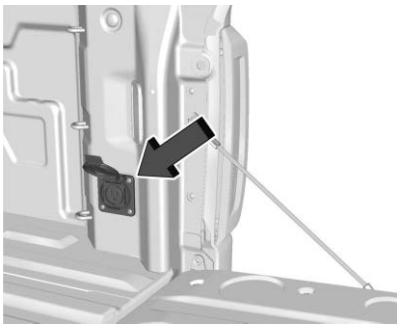

Truck Bed Power Outlet

When the ignition is on, power to the outlets is enabled. Power is supplied to the outlet when electrical equipment is plugged into that outlet. One power outlet can be used with electrical equipment that uses a maximum of 400 watts. If both outlets are being used, 400 watts will be shared between the outlets. Ensure that all connected devices do not exceed 400 watts.

The outlets will not operate when the ignition is off or the plug is not fully seated into the outlet.

If equipment is connected using more than 400 watts or a system fault is detected, a protection circuit shuts off the power supply and the indicator light turns off.

Do not use a power outlet with a missing or damaged cover.

The power outlet is not designed for the following, and may not work properly if they are plugged in:

- Equipment with high initial peak wattage, such as compressor-driven refrigerators and electric power tools
- Other equipment requiring an extremely stable power supply, such as microcomputer-controlled electric blankets and touch sensor lights
- Medical equipment

Wireless Charging

⚠ Warning

Wireless charging may affect the operation of an implanted pacemaker or other medical devices. If you have one, it is recommended to consult with your doctor before using the wireless charging system.

⚠ Warning

Always keep the wireless charging surface and the back of the phone case clear of coins, keys, rings, paper clips, cards and other objects. The system may not detect the presence of these objects, which could become very hot and cause burns. Remove the phone and allow to cool completely before handling.

NOT FOR RESALE

Caution

Vehicle key cards, credit cards, hotel key cards, and other Near Field Communication (NFC) cards may be damaged if placed on the charging surface.

If equipped, the vehicle has up to two wireless chargers, in the front of the center console storage bin. The system operates at 127.7 kHz or 360 kHz and can charge one Qi 2.x compatible smartphone per charger at a rate of up to 3 amp (15 W) or if equipped 5 amp (25 W).

To begin charging, the vehicle must be on or Retained Accessory Power must be active. See *Retained Accessory Power (RAP)* ⇨ *214*.

The operating temperature is −40 °C (−40 °F) to 85 °C (185 °F) for the charging system and 0 °C (32 °F) to 35 °C (95 °F) for the phone. An icon will display on the infotainment screen if the wireless charger or smartphone are outside of normal operating temperature. Charging will automatically resume when a normal operating temperature is reached.

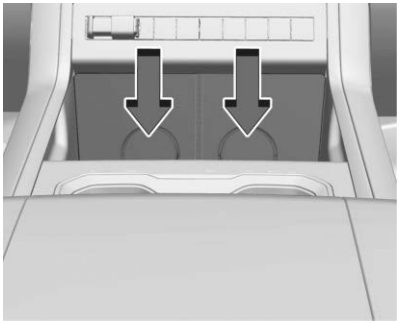

To charge a compatible smartphone:

1. Remove all objects from the charging surface. The system may not charge if there are any objects between the smartphone and charger.
2. Place the smartphone face up against the charger until the magnet ring attaches to the wireless charger. A smartphone case and smartphone must be Qi 2 compatible and include a magnet ring to hold the smartphone to the charging surface.
3. A green charging symbol appears on the infotainment display next to the phone icon when the smartphone is detected.

The smartphone may become warm during charging. This is normal. In warmer temperatures, your phone may take longer to charge.

Troubleshooting Wireless Charging

If a smartphone is placed on the charger and appears, remove the smartphone and any objects from the surface of the charger and try again.

If a smartphone is placed on the charger and appears, the charger and/or the smartphone is overheated. Remove the smartphone and any objects from the charger in order to cool the system.

For vehicles with wireless phone projection, the smartphone may overheat during wireless charging. The smartphone may slow down, stop charging, or shut down to protect the battery. The phone may need to be removed from its case to prevent overheating. The may appear while the phone is cooling down enough for wireless charging to automatically resume. This is normal. Individual phone performance may vary.

NOT FOR RESALE

Certain smartphone accessories may be required to make your phone compatible with the wireless charging system. See your dealer for additional information.

Warning Lights, Gauges, and Indicators

Warning lights, gauges, and indicators can alert you to an issue with your vehicle. Some warning lights display briefly to show that they are working when you start the vehicle. However, if a warning light persists while driving, or if a gauge shows there may be a problem, be sure to refer to the sections under "Warning Lights, Gauges, and Indicators."

Paying attention to your vehicle's warning lights, gauges, and indicators and promptly addressing any issues may help you to prevent an expensive repair or personal injury. Postponing repairs can be costly and even dangerous.

NOT FOR RESALE

Instrument Cluster

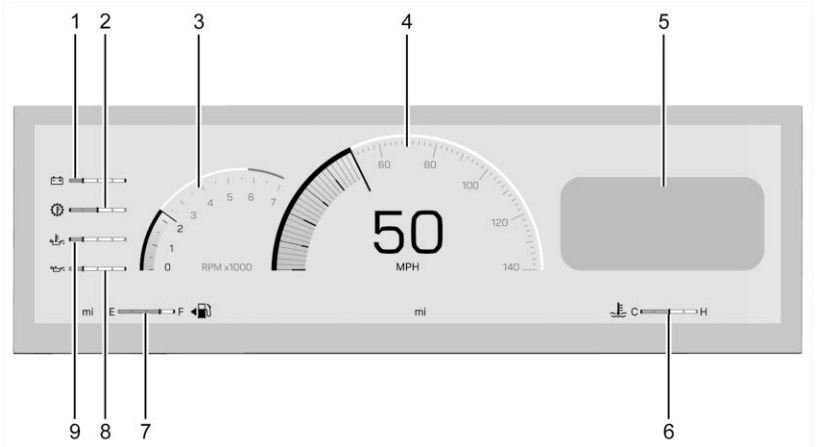

English Gauge View Shown, Metric and Others Similar

1. Voltmeter. See *Voltmeter Gauge* ⇨ *116*.
2. Transmission Temperature Gauge. See *Transmission Temperature Gauge* ⇨ *116*.
3. Tachometer. See *Tachometer* ⇨ *114*.
4. Speedometer. See *Speedometer* ⇨ *113*.
5. Driver Information Center. See *Driver Information Center (DIC)* ⇨ *131*.
6. Engine Coolant Temperature. See *Engine Coolant Temperature Gauge* ⇨ *115*.
7. Fuel Gauge. See .*Fuel Gauge* ⇨ *114*.
8. Engine Oil Pressure. See *Engine Oil Pressure Gauge* ⇨ *114*
9. Engine Oil Temperature Gauge. See *Engine Oil Temperature Gauge* ⇨ *115*.

Reconfigurable Instrument Cluster

⚠ Warning

Driving Visualizer is not a replacement for keeping your eyes on the road ahead. It may not detect all objects and may detect objects incorrectly. Relying on the display could cause you or others to be injured or killed. Always supervise the driving task and monitor traffic conditions.

The cluster display layout can be changed. Some of the selectable views may not be available for your particular vehicle.

The following are selectable views:

Gauge: Displays gauges and tachometer next to the speedometer. There is one information zone to the right of the speedometer.

Clean: Displays only the speedometer.

NOT FOR RESALE

Off Road: If equipped, displays vehicle pitch and roll information, road wheel angle, and Four-Wheel Drive status.

Driving Visualizer: If equipped, displays information on what the vehicle detects around you in real time. If Super Cruise is not active, only your vehicle, objects in your current lane, and minimal surroundings display. If Super Cruise is active, the vehicle's active path, surrounding lanes, and relevant detected vehicles and objects display.

Tow/Haul: If equipped, displays the tachometer below the speedometer and gauges to the left. To the right of the speedometer, if a trailer is attached, trailer information displays. If a trailer is not attached, only fuel economy is shown. See *General Towing Information* ⇨ *316*.

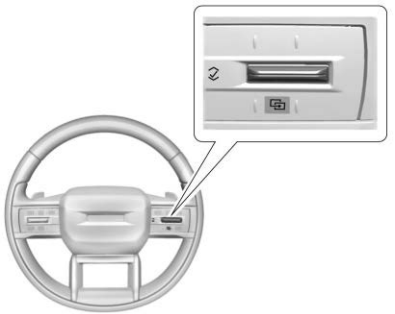

To change the cluster configuration, press on the right steering wheel control to cycle through the views.

Display Settings

Turn the following options on or off using the infotainment display. Some may not be available for your vehicle. See *Settings* ⇨ *171*.

Speed Sign

Shows sign information from a roadway database in the onboard navigation. The sign will show "– –" when there is no detected speed limit or the system is unavailable.

Turn-by-Turn Graphics

Provides Turn-by-Turn navigation graphics during an active route in your driver display.

Traffic Sign Recognition

Displays the detected speed limit in your driver display. See *Traffic Sign Assistant* ⇨ *298*.

Speedometer

The speedometer shows the vehicle speed in either kilometers per hour (km/h) or miles per hour (mph).

Odometer

The odometer displays the distance the vehicle has been driven, in either kilometers or miles.

Trip Odometer

The trip odometer displays the distance the vehicle was driven since the trip odometer was last reset.

Access and reset the trip odometer through the Vehicle Status. See *Vehicle Status* ⇨ *131*.

NOT FOR RESALE

Tachometer

The tachometer displays the engine speed in revolutions per minute (rpm) when the engine is on.

During Auto Stop mode, the tachometer may vary by several hundred rpm when the engine is shutting off and restarting.

Fuel Gauge



English Gauge View Shown Others Similar



Metric Gauge View Shown, Others Similar

When the ignition is on, the fuel gauge displays the remaining fuel in the tank.

There is an arrow near the fuel gauge pointing to the side of the vehicle the fuel door is on.

When the gas tank nears empty, the low fuel light indicates you should refuel the vehicle soon.

The fuel gauge may exhibit the following normal conditions, none of which indicate a problem with the gauge:

- Show an approximate measurement. For example, the gauge may show half a tank, but it could actually take a little more or less than half the tank's capacity to fill the tank.
- Move a little while driving on a hill, turning a corner, speeding up, or braking.
- Take time to stabilize after the ignition is turned on and return to empty when the ignition is turned off.

Fuel Range

The estimated fuel range displays near the fuel gauge. The fuel range shows the approximate distance the vehicle can be driven without refueling. This estimate uses the vehicle's average fuel economy from recent driving history and the amount of fuel remaining in the tank.

When the estimated fuel range is low, the range shows LOW and a message may also display in the Driver Information Center.

Engine Oil Pressure Gauge

Caution
Lack of proper engine oil maintenance can damage the engine. Driving with the engine oil low can also damage the engine. The repairs would not be covered by the vehicle warranty. Check the oil level as soon as possible. Add oil if required, but if the oil level is within the operating range and the oil pressure is still low, have the vehicle serviced. Always follow the maintenance schedule for changing engine oil.

NOT FOR RESALE

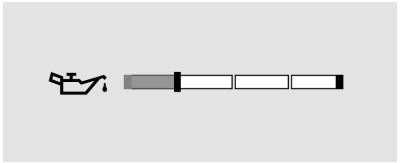

Gauge View Shown, Other Similar

If equipped, this gauge displays the engine oil pressure in kPa or psi when the engine is running.

Oil pressure can vary with engine speed, outside temperature, coolant temperature, and oil viscosity.

On some models, the oil pump will vary engine oil pressure according to engine needs. Oil pressure may change quickly as the engine speed or load varies. This is normal. If the oil pressure warning light or Driver Information Center message indicates oil pressure outside the normal operating range, check the engine oil as soon as possible.

See *Engine Oil (Gasoline)* ⇨ *329 Engine Oil (Diesel)* ⇨ *331*.

Engine Oil Temperature Gauge

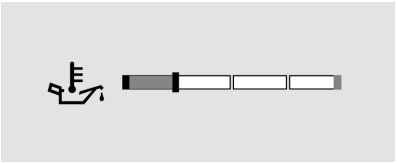

Gauge View Shown, Others Similar

If equipped, this gauge displays the engine oil temperature.

If the gauge pointer moves into the high end, the engine oil has overheated. Under normal driving conditions, pull off the road, stop the vehicle, and turn off the engine as soon as possible.

See *Engine Oil (Gasoline)* ⇨ *329 Engine Oil (Diesel)* ⇨ *331*.

Engine Coolant Temperature Gauge

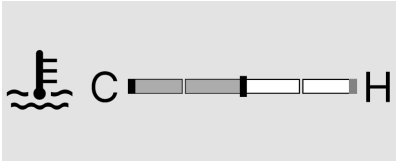

English Gauge View Shown, Others Similar

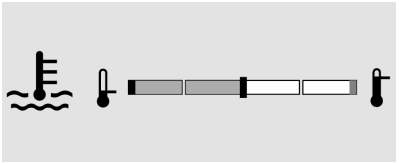

Metric Gauge View Shown, Others Similar

This gauge displays the engine coolant temperature.

If the gauge pointer moves into the high end, the engine has overheated.

NOT FOR RESALE

Under normal driving conditions, pull off the road, stop the vehicle, and turn off the engine as soon as possible. See *Engine Overheating (Gasoline)* ⇨ *344 Engine Overheating (Diesel)* ⇨ *345*.

Transmission Temperature Gauge

Caution
Do not drive the vehicle while the transmission fluid is overheating, or the transmission can be damaged. This could lead to costly repairs that would not be covered by the warranty. See your dealer if the transmission fluid continues to overheat.

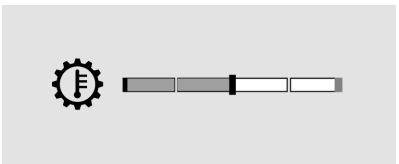

Gauge View Shown, Others Similar

If equipped, the transmission temperature gauge displays the transmission fluid temperature. If the gauge reads in the red area and/or a message appears in the Driver Information Center, stop and check the vehicle. One problem may be low transmission fluid.

Voltmeter Gauge

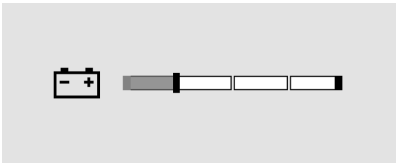

Gauge View Shown, Others Similar

This gauge indicates the battery voltage.

When the engine is running, this gauge shows the condition of the charging system. The gauge can transition from a higher to lower or a lower to higher reading. This is normal. If the vehicle is operating outside the normal operating range, the charging system light comes on. See *Charging System Light* ⇨ *119*. The voltmeter gauge may also read lower when in fuel economy mode. This is normal.

Readings outside the normal operating range can also occur when a large number of electrical accessories are operating in the vehicle and the engine is left idling for an extended period. This condition is normal since the charging system is not able to provide full power at engine idle. As engine speeds are increased, this condition should correct itself as higher engine speeds allow the charging system to create maximum power.

The vehicle can only be driven for a short time with the readings outside the normal operating range. If the vehicle must be driven, turn off all accessories, such as the radio and air conditioner.

Readings outside the normal operating range indicate a possible problem in the electrical system. Have the vehicle serviced as soon as possible.

Seat Belt Reminders

Driver Seat Belt Reminder Light

There is a driver seat belt reminder light on the instrument cluster.

NOT FOR RESALE



When the vehicle is started, or if the driver remains or becomes unbuckled while the vehicle is moving, this light flashes and an audible alert sounds to alert the driver to fasten their seat belt. The light may then display solid until the driver seat belt is buckled. This cycle may continue several times or continuously until the driver seat belt is buckled. If the driver seat belt is buckled, the light will not display and audible alert will not sound.

Front Passenger Seat Belt Reminder Light

This vehicle may have a front passenger seat belt reminder light near the passenger airbag status indicator. See *Passenger Sensing System* ⇨ *69*.



When the vehicle is started, or if the front passenger remains or becomes unbuckled while the vehicle is moving, this light flashes and an audible alert may sound to alert the front passenger to fasten their seat belt. The light may then display solid until the front passenger seat belt is buckled. This cycle may continue several times or continuously until the front passenger seat belt is buckled. If the front passenger seat belt is buckled, the light will not display and the audible alert will not sound.

Alerts may occur if an object, such as a briefcase, handbag, grocery bag, laptop, or other electronic device, is on the front passenger seat. To turn off the reminder light and/or audible alert, remove the object from the seat or buckle the seat belt.

Second Row Passenger Seat Belt Reminder Lights

This vehicle may have second row passenger seat belt reminder lights.



When the vehicle is started and not moving, and if a rear passenger has not buckled their seat belt, the light will display solid. If a rear passenger remains or becomes unbuckled while the vehicle is moving, this light may flash and an audible alert may sound to alert the driver that a rear passenger needs to fasten their seat belt.

An ✕ indicates the seat belt is not buckled. A ✓ indicates the seat belt is buckled.

For information on the front seat belt reminder lights, see "Driver Seat Belt Reminder Light" and "Front Passenger Seat Belt Reminder Light" listed previously.

Alerts may occur if an object, such as a briefcase, handbag, grocery bag, laptop, or other electronic device, is on the rear passenger seats. To turn off the reminder light and/or audible alert, remove the object from the seat or buckle the seat belt.

NOT FOR RESALE

Airbag Readiness Light

Warning

If the airbag readiness light stays on after the vehicle is started or comes on while driving, it means the airbag system might not be working properly. The airbags in the vehicle might not inflate in a crash, or they could even inflate without a crash. To help avoid injury, have the vehicle serviced right away.

This light shows if there is an electrical problem with the airbag system. It is located in the instrument cluster. The system check includes the airbag sensor(s), the passenger sensing system, the pretensioners, the airbag modules, the wiring, and the crash sensing and diagnostic module. For more information on the airbag system, see *Airbag System* ⇨ *64*.



The airbag readiness light comes on for several seconds when the vehicle is started. If the light does not come on then, have it fixed immediately.

If there is a problem with the airbag system, a Driver Information Center (DIC) message may also come on.

Passenger Airbag Status Indicator

Warning

If the airbag readiness light ever comes on and stays on, it means that something may be wrong with the airbag system. To help avoid injury to yourself or others, have the vehicle serviced right away. See *Airbag Readiness Light* ⇨ *118* for more information, including important safety information.

The vehicle has a passenger sensing system. See *Passenger Sensing System* ⇨ *69* for important safety information. The overhead console has a passenger airbag status indicator.



The passenger airbag status indicator may include text and/or symbols to indicate the passenger frontal airbag is either On or Off.

When the vehicle is started, the passenger airbag status indicator will light both the On and Off indicators for several seconds as a system check.

Then, after several more seconds, the passenger airbag status indicator for either On or Off will be lit to let you know the status of the front outboard passenger frontal airbag.

If the status indicator for On is lit on the passenger airbag status indicator, it means that the front outboard passenger frontal airbag is allowed to inflate.

If the status indicator for Off is lit on the passenger airbag status indicator, it means that the passenger sensing system has turned off the front outboard passenger frontal airbag.

NOT FOR RESALE

If after several seconds both status indicator lights remain on, or if there are no lights at all, or if the airbag readiness light is on, there may be a problem with the lights or the passenger sensing system. See your dealer for service right away.

Charging System Light

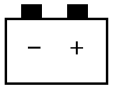

This light displays briefly when you start your vehicle. This is a normal test your vehicle runs on start up.

If the light stays on or displays while driving, there could be a problem with the electrical charging system. Have it checked by your dealer. Driving while this light is on could drain the 12-volt battery.

If you must drive a short distance with the light on, turn off all accessories, such as the radio, to save battery power. Find a safe place to stop the vehicle.

Malfunction Indicator Light (Gasoline Check Engine Light)



Caution

If the vehicle is driven continually with this light on, the emission control system may not work as well, the fuel economy may be lower, and the vehicle may not run smoothly. This could lead to costly repairs that might not be covered by the vehicle warranty.

Caution

Modifications to the engine, transmission, exhaust, intake, or fuel system, or the use of replacement tires that do not meet the original tire specifications, can

(Continued)

Caution (Continued)

cause this light to come on. This could lead to costly repairs not covered by the vehicle warranty. This could also affect the vehicle's ability to pass an Emissions Inspection/Maintenance test. See *Accessories and Modifications* ⇨ *321*.

This light displays briefly when you start your vehicle. This is a normal test your vehicle runs on start up. If it does not display, see your dealer for service.

The light is part of emission control on-board diagnostic system of the vehicle. If this light stays on or displays while driving, a malfunction is present, and the vehicle may require service. See *Ignition Positions* ⇨ *208*.

The system often shows malfunctions before any problem is noticeable. Being aware of the light and seeking service promptly when it displays may prevent damage.

If the light is flashing: A malfunction has been detected that could damage the emission control system and increase vehicle emissions. Diagnosis and service may be required. See your dealer.

NOT FOR RESALE

To help prevent damage, reduce vehicle speed, and avoid hard accelerations and uphill grades. If towing a trailer, reduce the amount of cargo being hauled as soon as possible.

If the light continues to flash, find a safe place to park. Turn the vehicle off and wait at least 10 seconds before restarting the engine. If the light is still flashing, follow the previous guidelines under "If the light is flashing," and see your dealer for service as soon as possible.

If the light is on steady: A malfunction has been detected. Diagnosis and service may be required. See your dealer.

Check the following:

- If fuel has been added to the vehicle using the capless funnel adapter, make sure that it has been removed. See "Filling the Tank with a Portable Gas Can" under *Filling the Tank (Gasoline)* ⇨ *312 Filling the Tank (Diesel)* ⇨ *314*. The diagnostic system can detect if the adapter has been left installed in the vehicle, allowing fuel to evaporate into the atmosphere. A few driving trips with the adapter removed may turn off the light.
- Poor fuel quality can cause inefficient engine operation and poor drivability, which may go away once the engine is warmed up. If this occurs, change the fuel brand. It may require at least one full tank of the proper fuel to turn the light off. See *Recommended Fuel (L4B 2.7L L4 and L76 5.7L V8 Gasoline Engines)* ⇨ *304 Recommended Fuel (L78 6.6L V8 Gasoline Engine)* ⇨ *304 Recommended Fuel (Diesel)* ⇨ *305*.

If the light remains on, see your dealer.

Emissions Inspection and Maintenance Programs

If the vehicle requires an Emissions Inspection/Maintenance test, the test equipment can be used to connect to the vehicle's Data Link Connector.

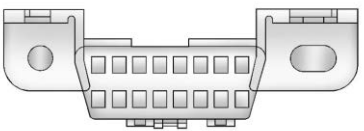

The Data Link Connector is under the instrument panel to the left of the steering wheel. Connecting devices that are not used to perform an Emissions Inspection/Maintenance test or to service the vehicle may affect vehicle operation. See *Add-On Electrical Equipment* ⇨ *316*. See your dealer if assistance is needed.

The vehicle may not pass inspection if:

- The Malfunction Indicator Light displays when the engine is running
- The light does not display when the ignition is on while the engine is off.
- Critical emission control systems have not been completely diagnosed. If this happens, the vehicle would not be ready for inspection and might require several days of routine driving before the system is ready for inspection. This can happen if the 12-volt battery has recently been replaced or run down, or if the vehicle has been recently serviced.

See your dealer if the vehicle will not pass or cannot be made ready for the test.

NOT FOR RESALE

Malfunction Indicator Light (Diesel Check Engine Light)



Caution

If the vehicle is driven continually with this light on, the emission control system may not work as well, the fuel economy may be lower, and the vehicle may not run smoothly. This could lead to costly repairs that might not be covered by the vehicle warranty.

Caution

Modifications to the engine, transmission, exhaust, intake, or fuel system, or the use of replacement tires that do not meet the original tire specifications, can

(Continued)

Caution (Continued)

cause this light to come on. This could lead to costly repairs not covered by the vehicle warranty. This could also affect the vehicle's ability to pass an Emissions Inspection/Maintenance test. See *Accessories and Modifications* ⇨ *321*.

This light displays briefly when you start your vehicle. This is a normal test your vehicle runs on start up. If it does not display, see your dealer for service.

The light is part of emission control on-board diagnostic system of the vehicle. If this light stays on or displays while driving, a malfunction is present, and the vehicle may require service. See *Ignition Positions* ⇨ *208*.

The light may also display when the system has detected a problem with the Diesel Exhaust Fluid management system. See *Diesel Exhaust Fluid* ⇨ *218*.

The system often shows malfunctions before any problem is noticeable. Being aware of the light and seeking service promptly when it displays may prevent damage.

When the light displays, a malfunction has been detected. Diagnosis and service may be required. See your dealer.

Poor fuel quality can cause inefficient engine operation and poor drivability, which may go away once the engine is warmed up. If this occurs, change the fuel brand. It may require at least one full tank of the proper fuel to turn the light off. See *Recommended Fuel (L4B 2.7L L4 and L76 5.7L V8 Gasoline Engines)* ⇨ *304 Recommended Fuel (L78 6.6L V8 Gasoline Engine)* ⇨ *304 Recommended Fuel (Diesel)* ⇨ *305*.

If the light remains on, see your dealer.

Emissions Inspection and Maintenance Programs

If the vehicle requires an Emissions Inspection/Maintenance test, the test equipment will likely connect to the vehicle's Data Link Connector.

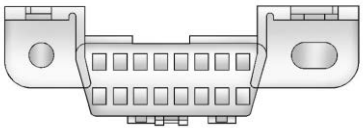

NOT FOR RESALE

The Data Link Connector is under the instrument panel to the left of the steering wheel. Connecting devices that are not used to perform an Emissions Inspection/Maintenance test or to service the vehicle may affect vehicle operation. See *Add-On Electrical Equipment* ⇨ *316*. See your dealer if assistance is needed.

The vehicle may not pass inspection if:

- The Malfunction Indicator Light displays when the engine is running.
- The light does not display when the ignition is on with the engine not running.
- Critical emission control systems have not been completely diagnosed. If this happens, the vehicle would not be ready for inspection and might require several days of routine driving before the system is ready for inspection. This can happen if the 12-volt battery has recently been replaced or run down, or if the vehicle has recently been serviced.

See your dealer if the vehicle will not pass or cannot be made ready for the test.

Brake System Warning Light



BRAKE

Metric **English**

⚠ Warning

The brake system might not be working properly if the brake system warning light is on. Driving with the brake system warning light on can lead to a crash. If the light is still on after the vehicle has been pulled off the road and carefully stopped, have the vehicle towed for service.

This light displays briefly when you start your vehicle. This is a normal test your vehicle runs on startup. If it does not display, see your dealer for service.

If the light stays on, have the brake system inspected immediately. This light may display if the brake fluid is low. See *Brake Fluid* ⇨ *349*.

If the light displays while driving, pull off the road and stop carefully. If equipped with electric brake boost, vehicle speed may be limited when the brake system warning light displays. The brake pedal might be harder to push, or the brake pedal may go closer to the floor. It could take longer to stop. If the light is still on, have the vehicle towed for service. See *Transporting a Disabled Vehicle* ⇨ *396*.

Electric Parking Brake Light



PARK

Metric **English**

This light displays when the Electric Parking Brake is applied. If the light flashes after the Electric Parking Brake is released, or while driving, there is a problem with the Electric Parking Brake system. A message may also display in the Driver Information Center.

If the light does not display, or remains flashing, see your dealer.

NOT FOR RESALE

Service Electric Parking Brake Light



This light may display briefly when you start your vehicle. This is a normal test your vehicle runs on start up. If it does not display, see your dealer for service.

If this light stays on or displays while driving, there is a problem with the electric parking brake. Take the vehicle to a dealer as soon as possible. In addition to the parking brake, other safety functions that use the electric parking brake may also be affected. A message may also display in the Driver Information Center. See *Electric Parking Brake* ⇨ *229*.

Antilock Brake System (ABS) Warning Light



This light displays briefly when you start your vehicle. This is a normal test your vehicle runs on start up. If it does not display, see your dealer for service.

If the locking front axle is engaged, the ABS warning light displays indicating the Antilock Brake System is unavailable until you disengage the front axle lock. This is normal.

When the Antilock Brake System detects a problem, the ABS warning light displays and stays on, and you may hear an audible alert. Your vehicle brakes will still function, but your Antilock Brake System is not functioning as expected. See your dealer for service.

If the ABS warning light and the brake system warning light are displayed, your Antilock Brake System and your regular brakes are not functioning as expected. See your dealer for service.

See *Brake System Warning Light* ⇨ *122*.

Four-Wheel-Drive Light



Auto Mode Shown, Other Modes Similar

If equipped, the corresponding light displays when an 2WD mode, 4HI mode, AUTO mode (all transfer cases); 4LOW mode and N mode (two-speed transfer case only) is selected.

The light will flash when a shift is in progress. Once the shift is complete the light will be steady.

If the light displays amber, there may be a malfunction with the four-wheel-drive system. See your dealer.

See *Four-Wheel Drive* ⇨ *226*.

NOT FOR RESALE

Hill Descent Control Light



If equipped, the Hill Descent Control light displays when the system is ready for use. When the light flashes, the system is active.

See *Hill Descent Control (HDC)* ⇨ *233*.

Lane Keep Assist (LKA) Light



The Lane Keep Assist (LKA) Light may display the following colors:

- White: Displays when the vehicle starts. A steady white light indicates that Lane Keep Assist is unable to assist.
- Green: Displays when Lane Keep Assist is turned on and ready to assist. Lane Keep Assist will gently turn the steering wheel if the vehicle approaches a detected lane marking.
- Amber: Displays when Lane Keep Assist is active. The light flashes amber as a Lane Departure Warning alert indicating that a lane marking has been unintentionally crossed. If the system detects you are steering intentionally (to pass or change lanes), the Lane Departure Warning alert may not display. The amber light also displays when the Blind Zone Steering Assist (BZSA) detects a potential crash with a moving vehicle in the lane you are entering. See *Blind Zone Steering Assist (BZSA)* ⇨ *298*.

Lane Keep Assist will not assist or alert if the turn signal is active in the direction of lane departure, or if Lane Keep Assist detects that you are accelerating, braking, or actively steering. See *Lane Keep Assist (LKA)* ⇨ *301*.

Hands-On Steering Assist Light



If equipped, this light displays the Hands-On Steering Assistance status.



If equipped, this light displays when you need to take immediate action by firmly steering the vehicle.

See *Hands-On Steering Assist (Lane Centering Assistance (Mexico))* ⇨ *252*.

NOT FOR RESALE

Automatic Emergency Braking (AEB) Disabled Light



This indicator displays when you turn off Automatic Emergency Braking or Front Pedestrian Braking.

This indicator also displays if Automatic Emergency Braking or Front Pedestrian Braking are unavailable due to malfunction, weather conditions, or a dirty windshield.

See *Automatic Emergency Braking (AEB)* ⇨ *289*.

See *Front Pedestrian Braking (FPB) System* ⇨ *292*.

Vehicle Ahead Indicator



If equipped, this indicator displays green when a vehicle is detected ahead and amber if you are following a vehicle too closely.

See *Forward Collision Alert (FCA) System* ⇨ *287*.

Pedestrian Ahead Indicator



If equipped, this indicator displays amber when a pedestrian is detected in front of the vehicle.

See *Front Pedestrian Braking (FPB) System* ⇨ *292*.

Traction Off Light



This light displays briefly when you start your vehicle. This is a normal test your vehicle runs on start up. If it does not display, see your dealer for service.

The traction off light displays when the Traction Control System has been turned off. When StabiliTrak/Electronic Stability Control is turned off, the Traction Control System is also turned off. To turn the Traction Control System and StabiliTrak/Electronic Stability Control off and on, see *Traction Control/Electronic Stability Control* ⇨ *232*.

If the Traction Control System is off, wheel slip does not limit acceleration unless necessary to help protect the driveline from damage. Adjust your driving accordingly.

Traction Control System (TCS)/ Electronic Stability Control Light



NOT FOR RESALE

This light displays briefly when you start your vehicle. This is a normal test your vehicle runs on startup. If it does not display, see your dealer for service.

The light flashes when the Traction Control System and/or the StabiliTrak/Electronic Stability Control System is actively working.

If the light is on and not flashing, the Traction Control System and StabiliTrak/Electronic Stability Control System may not be fully operational or able to assist maintaining control. Adjust your driving accordingly. If the condition persists, see your dealer as soon as possible. A message may display in the Driver Information Center.

See *Traction Control/Electronic Stability Control* ⇨ *232*.

The light may also flash when Antilock Brake System is active. See *Antilock Brake System (ABS)* ⇨ *229*.

Trailer Sway Control Light



If equipped, this light will flash when Trailer Sway Control is active. See *General Towing Information* ⇨ *316*.

Electronic Stability Control (ESC) Off Light



This light displays briefly when you start your vehicle. This is a normal test your vehicle runs on start up. If it does not display, see your dealer for service.

This light displays when the StabiliTrak/Electronic Stability Control system is turned off. When StabiliTrak/Electronic Stability Control is off, the Traction Control System is also off. To turn StabiliTrak/Electronic Stability Control off and on, see *Traction Control/Electronic Stability Control* ⇨ *232*.

If StabiliTrak/Electronic Stability Control and the Traction Control System are off, the systems do not assist in controlling the vehicle. Adjust your driving accordingly.

Engine Coolant Temperature Warning Light



Caution
The engine coolant temperature warning light indicates that the vehicle has overheated. Driving with this light on can damage the engine and it may not be covered by the vehicle warranty. See *Engine Overheating (Gasoline)* ⇨ *344 Engine Overheating (Diesel)* ⇨ *345*.

NOT FOR RESALE

This light briefly displays during vehicle startup as a normal test. If it does not display on startup, or if it stays lit, see your dealer for service.

If the light displays while driving, pull over and turn off the engine as soon as possible.

Driver Mode Control Light



This light displays when you select Normal mode.



This light displays when you select Sport mode.



This light displays when you select Snow/Ice mode.



This light displays when you select Off-Road mode.

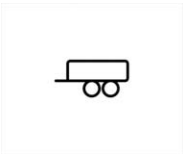

This light displays when you select the Tow/Haul mode.



This light displays when you select Terrain mode.



This light displays when you select My Mode.



This light displays when you select Baja mode.

See *Driver Mode Control* ⇨ *234*.

NOT FOR RESALE

Wait-to-Start Light (Diesel)

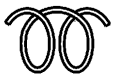

This light displays briefly when you start your vehicle. This is a normal test your vehicle runs on start up.

If the light displays, the glow plug system is active and operating. Wait until the light turns off before starting the engine. This light may not come on in warm temperatures.

See *Starting the Engine (Diesel)* ⇨ *210 Starting the Engine (Gasoline)* ⇨ *209*.

Tire Pressure Light



If equipped with the Tire Pressure Monitor System, this light displays briefly when you start your vehicle. This is a normal test your vehicle runs on start up.

The light displays to indicate information about tire pressures and the Tire Pressure Monitor System.

If the Light Stays On

This indicates that one or more of the tires are significantly underinflated.

A Driver Information Center tire pressure message may also display. Stop as soon as possible and inflate the tires to the pressure value shown on the Tire and Loading Information label. See *Tire Pressure* ⇨ *370*.

If the Light Flashes and Then Remains On

If the light flashes for about a minute and then stays on, there may be a problem with the Tire Pressure Monitor System. If the problem is not corrected, the light will display every time the vehicle is started. See *Tire Pressure Monitor Operation* ⇨ *372*.

Engine Oil Pressure Light (Uplevel Cluster)

Caution

Driving the vehicle with low engine oil pressure can damage the engine and the repairs would not be covered by the vehicle warranty.

If the engine oil pressure light comes on while driving:

1. Stop in a safe location and turn off the engine.
2. Check the oil level. See *Engine Oil (Gasoline)* ⇨ *329 Engine Oil (Diesel)* ⇨ *331*.
3. Add oil if the oil level is below the normal operating range.
4. Restart the vehicle. If the engine oil pressure light stays on for more than 10 seconds, turn the vehicle back off. Do not restart the vehicle. See your dealer for service.

NOT FOR RESALE



This light should display briefly when the engine starts. When the engine is off and the vehicle is on, the light should remain illuminated. If it does not display under either condition, contact your dealer.

If the light displays and stays on when the engine is running, it may not have adequate oil pressure. The oil level may be low or there may be some other oil system problem. Turn the engine off when it is safe to do so and contact your dealer.

Low Fuel Warning Light



This light displays briefly when you start your vehicle. This is a normal test your vehicle runs on start up.

The light displays when the fuel tank is running low and it turns off when fuel is added. If it does not, see your dealer for service.

If a message displays on the Driver Information Center (DIC) indicating HEAVY FUEL USE, refuel as soon as possible.

Diesel Exhaust Fluid (DEF) Warning Light (Diesel)



This light displays and an audible alert sounds when there is an issue with the Diesel Exhaust Fluid System. A Driver Information Center message will display, and vehicle speed may be limited.

See *Diesel Exhaust Fluid* ⇨ *218*.

Security Light



This light displays briefly when you start your vehicle. This is a normal test your vehicle runs on start up. If it does not display, see your dealer for service.

If the light stays on and the vehicle does not start, there could be a problem with the theft-deterrent system. See *Immobilizer Operation* ⇨ *34*.

High-Beam On Light



This light displays when the high-beam headlights are in use. See *High-Beam Systems* ⇨ *140*.

NOT FOR RESALE

Automatic High-Beam Light



If equipped, this light displays when the IntelliBeam system is enabled. See *High-Beam Systems* ⇨ *140*.

Front Fog Light Indicator



If equipped, this light displays when the front fog lights are turned on. See *Front Fog Lights* ⇨ *144*.

Lights On Reminder



This light displays when the exterior lights are in use. The light will not display when only the Daytime Running Lights are active. See *Headlight Controls* ⇨ *140*.

Cruise Control Light



If equipped, this light displays white when cruise control is on and ready, and turns green when set and active.

The light turns off when cruise control is turned off. See *Adaptive Cruise Control (Advanced)* ⇨ *240*.

Adaptive Cruise Control Light



If equipped, this light displays the Adaptive Cruise Control status.

See *Adaptive Cruise Control (Advanced)* ⇨ *240*.

Curve Speed Control Light



If equipped, this light displays green when Adaptive Cruise Control is actively controlling the vehicle speed and detects a sharp curve on the road ahead.

Adaptive Cruise Control automatically slows the vehicle down while navigating the curve, and may increase speed out of the curve without exceeding the set speed.

NOT FOR RESALE

Super Cruise Light



If equipped, this light displays the Super Cruise status. See *Super Cruise* ⇨ *263*.

Door Ajar Light



This light displays when a door is open or not securely latched. Before driving, check that all doors are properly closed.

Information Displays

Driver Information Center (DIC)

Driver information is displayed in the instrument cluster to the right of the speedometer. It displays vehicle system messages and the following information:

Audio Now Playing: Displays the actively playing audio.

Navigation: Displays a variety of navigation information.

Phone: Displays a variety of call information.

Off: Displays no information in the cluster information display areas.

See *Vehicle Messages* ⇨ *135*.

Some messages or menus that appear in the Driver Information Center may be navigated via the right steering wheel control.

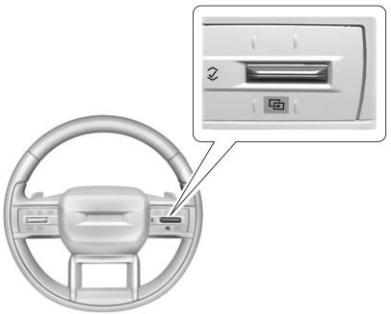

Use the selector to scroll through different items. Press the selector to open or select an item.

Vehicle Status

The status of various vehicle systems can be viewed on the infotainment screen. To access the menu, select the Vehicle Status icon on the infotainment app screen.

You can also select to display some content on the home screen. Press and hold the smaller card to edit and select Vehicle Status. Then swipe to find the desired content.

NOT FOR RESALE

The following is the list of vehicle status content and location. Not all content and options may be available for your vehicle.

Follow any messages or alerts that display. Some options may be unavailable while driving.

Gauges

Select the gauge icon to view vehicle gauges.

If there is a concern with one of the gauges, the Find a Dealership button will appear on this screen. You can select it to see a list of nearby dealerships. Select a listed dealership to begin navigation or the phone icon to have the dealership's phone number brought up in the phone app.

Coolant Temperature: Displays the temperature of the coolant in either degrees Celsius (°C) or degrees Fahrenheit (°F).

Transmission Fluid Temperature: Displays the temperature of the automatic transmission fluid in either degrees Celsius (°C) or degrees Fahrenheit (°F).

Oil Pressure: Displays the engine oil pressure in kPa (kilopascals) or psi (pounds per square inch).

Oil Temperature: Displays the current oil temperature in either degrees Celsius (°C) or degrees Fahrenheit (°F).

Tire Pressure: Displays the approximate pressures of each tire. Tire pressure displays in either kilopascal (kPa) or in pounds per square inch (psi). If the pressure is low, the value for that tire is shown in amber. See *Tire Pressure Monitor System* ⇨ *372* and *Tire Pressure Monitor Operation* ⇨ *372*.

Choose from the following options:
Relearn Sensors

If equipped, Tire Temperature is located below the tire pressure graphic. Tire Temperature displays overall temperature as either Cold, Cool, Normal, Warm, or Hot. Normal is typical for normal driving while Warm is typical for spirited driving. Unknown displays when tire temperature information is unavailable.

Oil Level: If equipped, displays an estimate of the oil level and how much oil needs to be added if low. Maintaining the proper oil level helps protect your engine. See *Engine Oil (Gasoline)* ⇨ *329 Engine Oil (Diesel)* ⇨ *331* and *Capacities and Specifications* ⇨ *420*.

Battery Voltage: Displays the current battery voltage.

Trip

Select the road icon to view trip information.

Trip Information: Trip 1 or 2 displays the current distance traveled, in either kilometers (km) or miles (mi), since the trip odometer was last reset.

Average Fuel Economy displays the approximate average liters per 100 kilometers (L/100 km) or miles per gallon (mpg). This number is calculated based on the number of L/100 km (mpg) recorded since the last time this menu item was reset. This number reflects only the current, approximate average fuel economy and changes as driving conditions change.

To reset these values, touch reset on the touchscreen display when the Trip Information dialog is selected.

Choose from the following options: Reset Trip 1 and Reset Trip 2

Fuel Economy: Displays average fuel economy, the best fuel economy over the selected distance, and a bar graph showing instantaneous fuel economy. Values display in liters per 100 kilometers (L/100 km) or miles per gallon (mpg). This number reflects only

NOT FOR RESALE

the approximate fuel economy and changes as driving conditions change. Only the best score can be reset.

Choose from the following options: Change Distance and Reset Best Score. The distance for average fuel economy and the best fuel economy can be changed to 40 km (25 mi), 80 km (50 mi), and 725 km (300 mi).

Current Trip: Displays the distance traveled since vehicle startup, in either kilometers (km) or miles (mi).

It also includes the Average Fuel Economy. Average Fuel Economy shows the approximate average liters per 100 kilometers (L/100 km), kilometers per liter (km/L), or miles per gallon (mpg). This number reflects the approximate Average Fuel Economy of the vehicle at that moment and changes as driving conditions change.

The timer shows the time in the current drive cycle.

All values in the Drive Summary automatically reset each time the vehicle is started.

Engine Hours: Displays the total number of hours the engine has run. This display also shows the engine idle hours.

Maintenance

Select the wrench icon to view maintenance information.

You can select the Find a Dealership button on this screen to see a list of nearby dealerships. Select a listed dealership to begin navigation or the phone icon to have the dealership's phone number brought up in the phone app.

Brake Pad Life: Displays an estimate of the remaining life of the front and back brake pads. Messages display based on brake pad wear and the state of the system. See *Brake Pad Life System* ⇨ *348*.

Choose from the following options: Reset Front Brake Pads, Reset Back Brake Pads, Status and notifications

Oil Life: Displays an estimate of the remaining oil life. If REMAINING OIL LIFE 99% is displayed, that means 99% of the current oil life remains. Follow any messages that display based on the oil life and the state of the system.

See *Engine Oil (Gasoline)* ⇨ *329 Engine Oil (Diesel)* ⇨ *331*. In addition to the engine oil life system monitoring the oil life, additional maintenance is recommended. See *Maintenance Schedule* ⇨ *412*.

Choose from the following options: Reset

The Oil Life must be reset after each oil change. It will not reset itself. Do not reset the Oil Life display at any time other than when the oil has just been changed. It cannot be reset accurately until the next oil change. To reset, see *Engine Oil Life System* ⇨ *333*.

Engine Air Filter Life: Displays an estimate of the remaining engine air filter life and the state of the system. Engine Air Filter Life 95% means 95% of the current air filter life remains. Follow any messages that display based on engine air filter life and the state of the system. The Air Filter Life display must be reset after the engine air filter replacement. See *Engine Air Filter Life System* ⇨ *334*.

Choose from the following options: Reset

Fuel Filter Life: Displays an estimate of the remaining fuel filter life. Follow any messages that displays about the status of the fuel filter.

Choose from the following options: Reset

Reset the Fuel Filter Life Remaining display after each fuel filter change. It will not reset itself. Also, be careful not to reset the display at any time other than when the fuel filter has just been changed because it cannot be reset

NOT FOR RESALE

accurately until the next fuel filter change. The fuel filter life will change to 100% when the system has been reset.

Diesel Exhaust Fluid (DEF): Displays the Diesel Exhaust Fluid level. For a guide on how much Diesel Exhaust Fluid (DEF) to add, see *Diesel Exhaust Fluid* ⇨ *218*.

Head-Up Display (HUD)

⚠ Warning

A Head-Up Display (HUD) image that is too bright or positioned too high in your field of view can reduce your ability to see the road ahead, especially at night. This may increase the risk of a crash. Keep the HUD image dim and positioned low in your field of view.

Caution

If you try to use the HUD image as a parking aid, you may misjudge the distance and damage your vehicle. Do not use the HUD image as a parking aid.

Caution

The Head-Up Display projects information using polarized light. Wearing polarized sunglasses can block this light, making the image invisible, dim, or difficult to read. Do not use polarized sunglasses when using the Head-Up Display feature.

If equipped, the Head-Up Display (HUD) projects vehicle information onto the windshield through a lens on top of the instrument panel.

You can change the language and the units of measurement to English or metric through the infotainment screen. See “System” under *Settings* ⇨ *171*.

If equipped, the Head-Up Display (HUD) may display the following vehicle information, messages, or alerts:

- Speed
- Incoming Phone Calls
- Navigation
- Driver Assistance Indicators
- Vehicle Messages

Controls

To turn the Head-Up Display (HUD) on or off, on the infotainment app screen, select Controls > Quick Access > HUD. To access the Head-Up Display (HUD) settings screen to adjust the brightness, height, and rotation, on the infotainment app screen, select Controls, then on the left menu screen, select HUD.

Image

To adjust the Head-Up Display (HUD) image:

1. Adjust the driver seat to your optimal driving position.
2. Start the vehicle.
3. On the infotainment app screen, select Controls > HUD, on the left menu screen.
4. Press the height and rotation icons or tap the bars to adjust the image to a position level with the ground that is fully visible and clear.
5. The image will automatically dim and brighten to compensate for outside lighting. Use the brightness icons to adjust as needed.

NOT FOR RESALE

The image can temporarily light up depending on the angle and position of sunlight on the image. This is normal.

The Head-Up Display (HUD) settings are stored and recalled with memory seats, if equipped. See *Memory Seats* ⇨ *51*.

Options

Speed Limit Sign:

- To turn the posted speed sign, if equipped, in the Head-Up Display (HUD) on or off, on the infotainment home screen, select *Settings* ⇨ *171* > Display > Driver Display.
- To turn Traffic Sign Recognition, if equipped, in the Head-Up Display (HUD) on or off, on the infotainment home screen, select *Settings* ⇨ *171* > Vehicle > Speed Assist.

Turn-by-Turn Navigation

- To turn the Turn-by-Turn Navigation in the Head-Up Display (HUD) on or off, on the infotainment home screen select *Settings* ⇨ *171* > Display > Head-Up Display.

Content

If equipped, the following content displays in the Head-Up Display (HUD). Critical alerts may appear in the display, even when it is turned off.

Speed: Displays the speedometer reading in English or metric units, posted speed limit, and some indicators. See *Symbols* ⇨ *3*. Incoming phone call information, if connected via Bluetooth, and some alerts will temporary display in the Head-Up Display (HUD).

Navigation: If equipped, displays the speed content and Turn-by-Turn Navigation information during an active route.

Troubleshooting

To ensure optimal visibility of the Head-Up Display (HUD) image, make sure that:

- The windshield is clean. See *Interior Care* ⇨ *405*. The windshield is part of the Head-Up Display (HUD) system. See *Windshield Replacement* ⇨ *354*.
- The lens is clean and clear of any obstructions. See *Interior Care* ⇨ *405*.
- The brightness setting is appropriately adjusted.
- The Head-Up Display (HUD) is adjusted to the proper height and rotation.

If you continue to experience problems, contact your dealer.

Vehicle Messages

Messages displayed on the Driver Information Center indicate the vehicle status or needed action to correct a condition. Multiple messages may appear together.

Vehicle status notifications are also sent to the infotainment display. Touch the top of the infotainment app screen to the right of the app tray icons to display vehicle messages. A red dot on the profile initial box indicates an active issue. Depending on the message, you can schedule service or find the nearest dealer.

Press ✓ to acknowledge and clear the messages that do not require immediate action. You cannot clear messages that require immediate action until that action is performed.

Address and follow all message instructions promptly; clearing a message does not correct the issue.

If a SERVICE message appears, see your dealer.

NOT FOR RESALE

The system may display messages concerning:

- Service Messages
- Fluid Levels
- Vehicle Security
- Brakes
- Ride Control Systems
- Advanced Driver Assistance Systems
- Cruise Control
- Lighting and Bulb Replacement
- Wiper/Washer Systems
- Doors and Windows
- Seat Belts
- Airbag Systems
- Engine and Transmission
- Tire Pressure
- Battery
- Steering

Engine Power Messages

REDUCED ACCELERATION DRIVE WITH CARE

This message indicates reduced propulsion power, which will affect maximum acceleration. Drive with caution. Try restarting after the ignition has been off for two minutes. If acceleration decreases significantly, propulsion may be disabled while the vehicle is in motion.

If this message stays on or appears repeatedly, take the vehicle to your dealer for service as soon as possible.

Vehicle Speed Messages

SPEED LIMITED TO XXX KM/H (MPH)

This message indicates that the vehicle has limited its speed to protect vehicle systems, such as lubrication, thermal, brakes, suspension, tires, or Teen Driver, if equipped.

If the vehicle has a diesel engine, this message may indicate low diesel exhaust fluid (DEF). See *Diesel Exhaust Fluid* ⇨ *218* for more information.

Universal Remote System

Universal Remote System Programming (Garage Door Opener)

If equipped, the Universal Remote System can replace up to eight remote control transmitters (remote controls), such as garage door openers, security systems, and home automation devices. These instructions address garage door openers, but will work for other devices, too.

Do not use the Universal Remote System with any garage door opener that does not have the stop and reverse feature. This includes any garage door opener model manufactured before April 1, 1982.

Keep the original hand-held transmitter for use in other vehicles and future programming and erase the system if you terminate vehicle ownership. See “Erasing Universal Remotes” later in this section.

NOT FOR RESALE

Programming the Universal Remote System

Programming involves time-sensitive steps. You must complete these steps within the allotted time, or you will have to repeat programming.

Read these instructions completely before programming the Universal Remote System. It may help to have another person assist with the programming process.

1. If your garage door opener includes a hand-held transmitter, make sure it has a new battery for quick and accurate transmission of the radio-frequency signal.
2. Clear all people and objects away from the garage door.
3. Park your vehicle outside and directly facing the garage door opener receiver. The vehicle must remain in P (Park) for the entire duration of the programming.
4. Select > Remotes > Add New Remote.
5. If you have a hand-held transmitter, make sure to press Yes to continue to the next step.

   If your garage door opener does not include a hand-held transmitter, press either D-Mode (mostly used in North America), or UR-Mode (mostly used in Europe, Mideast, and Asia), and jump to "D-Mode and UR-Mode Based Programming" later in this section.

   Hand-Held Transmitter Based Programming

   Once you press Yes for the hand-held transmitter, you should see a screen with Searching for Signal.
6. While Searching for Signal is displayed, press and hold the hand-held transmitter button about 3 to 8 cm (1 to 3 in) away from the rear-view mirror. Do not release the button until Signal Found displays.

   If Signal Found does not display after 45 seconds, press < and return to Step 4 to try again.

   Some garage door openers require a modification to Step 6. See "Radio Signals for Some Gate Operators" later in this section.
7. Once Signal Found displays, press the Test button on the screen. You may need to press it several times, as some garage door openers require multiple valid signals when programming.
8. If your garage door moves, press the It Worked button to confirm programming was successful and end the process.

   If programming was not successful, you can return to Step 4 and try again or follow additional steps described in "D-Mode and UR-Mode Based Programming" later in this section. You can also consult with HomeLink by jumping to "Contact HomeLink" later in this section.

   D-Mode and UR-Mode Based Programming

   If supported, you may be able to program D or UR mode garage door receiver remotes.
9. Locate the Learn or Smart button on the garage door opener receiver in the garage. The name and color may vary by manufacturer but is usually located near the antenna wire. If you have any difficulty finding the button, refer to the garage door opener manufacturer's instructions.

NOT FOR RESALE

10. Press and release the Learn or Smart button on the garage door opener receiver, then complete the next step within 30 seconds of pressing the button. If it takes longer than 30 seconds, press the button again.
11. Return to the vehicle and press the Test button on the screen. You may need to press the Test button several times. If your garage door moves, then programming was successful. Press the It Worked button to confirm programming was successful and end the process.

    If programming was not successful, you may retry steps above by pressing the It Didn't Work button or consult with HomeLink by jumping to "Contact HomeLink" later in this section.

Contact HomeLink

For questions or programming help, visit www.homelink.com/gm or call 1–800–355–3515. International rates apply for calls placed outside the U.S., Canada, or Puerto Rico, and may differ based on landline or mobile phone.

Using Universal Remotes

After programming a Universal Remote, you can edit its name and location. Select Edit on the screen, then select the desired remote. Stay near the programmed garage door opener when you select Update Location.

The system adds a shortcut icon to the Quick Access menu for each programmed remote. Press and hold a shortcut icon, then drag it to reposition it on the Quick Access screen. When the vehicle is near a programmed garage door opener, an additional shortcut icon may appear in the lower-left corner of the screen. This location-based icon cannot be repositioned.

Select a shortcut icon to operate the remote.

Erasing Universal Remotes

To erase programmed Universal Remotes:

1. Select Edit.
2. Select the remote you want to erase. To erase all, select any remote.
3. Select Delete or Delete All.

Radio Signals for Some Gate Operators

Some gate operators and radio-frequency laws require transmitter signals to time out after several seconds of transmission.

This may not be long enough for the Universal Remote system to pick up the signal during programming. If programming did not work, replace Step 6 under "Programming the Universal Remote System," previously in the section, with the following:

Press and release the hand-held transmitter button every two seconds until Signal Found appears on the screen. Continue to Step 7 to complete programming.

Universal Remote System Operation (Garage Door Opener)

Using the Universal Remote System

If equipped, select > Remotes on the infotainment display, then select the desired universal remote.

NOT FOR RESALE

Reprogramming a Single Universal Remote

To reprogram a single remote:

1. Select > Remotes > Edit.
2. Select the universal remote you want to reprogram.
3. Select Delete.
4. Select Add New Remote. Follow the instructions in *Universal Remote System Programming (Garage Door Opener)* ⇨ *136*.

NOT FOR RESALE

Lighting

Exterior Lighting
Headlight Controls 140
High-Beam Systems 140
Headlights Off Reminder 142
Daytime Running Lights 142
Automatic Headlight System 142
Hazard Warning Flashers 143
Turn and Lane-Change Signals 143
Front Fog Lights 144
Cornering Lights 144
Task Lighting 144
Exterior Cargo Lights 145

Interior Lighting
Instrument Panel Illumination Control 145
Dome Lights 146
Reading Lights 146

Lighting Features
Entry Lighting 146
Exit Lighting 147
Ambient Lighting 147
Battery Load Management 147
Battery Power Protection 148
Exterior Lighting Battery Saver 148

Exterior Lighting

Headlight Controls

The headlight control is on the infotainment screen. Touch the Headlights symbol, then select any of the following options.

Off : Turns off the exterior lights and deactivates the AUTO mode.

For vehicles first sold in Canada: When not in P (Park), either the Daytime Running Lights or headlights must always be on, due to Canadian safety regulations. Regardless of the headlight control setting, when you shift out of P (Park), the Automatic Headlight System will activate and turn on either the Daytime Running Lights or headlights.

Auto: Enables the Automatic Headlight System, which controls the exterior lights and instrument panel lights depending on outside lighting. See *Automatic Headlight System* ⇨ *142*.

: Turns on the exterior lights, such as parking lights, taillights, instrument panel lights, and license plate lights.

: Turns on the headlights and all the lights listed in .

You can also activate the previous headlight options from the infotainment home screen, by selecting > Lights > Headlights.

Lights On in Canada

For vehicles first sold in Canada: When not in P (Park), either the Daytime Running Lights or headlights must always be on, due to Canadian safety regulations. Regardless of the headlight control setting, when you shift out of P (Park), the Automatic Headlight System will activate and turn on either the Daytime Running Lights or headlights.

High-Beam Systems

Manual High-Beam Controls

High/Low-Beam Changer

To manually turn the high beams on, push the turn signal lever away from you. To return to low beams, push the lever again or pull it toward you and release.

The high-beam indicator light appears in the instrument cluster when the high-beam headlights are on.

NOT FOR RESALE

Flash-to-Pass

To flash the high beams, pull the turn signal lever toward you and release.

Automatic High-Beam System — IntelliBeam

If equipped, this system turns the high-beam headlights on and off automatically when it is dark enough and no other traffic is present.

There is a sensor near the top center of the windshield that automatically detects the lights of oncoming and preceding vehicles. Keep this area of the windshield clear of obstructions for best system performance.

Turning IntelliBeam On and Off

To enable IntelliBeam:

1. Set the Headlights control to Auto or . See *Headlight Controls* ⇨ *140*
2. On the infotainment home screen, select > Auto High Beams or > Lights > Auto High Beams.

The IntelliBeam light AUTO appears in the instrument cluster when the Adaptive Headlight System is enabled.

To disable the system when high beams are ON, turn on the manual high beams using either the high/low-beam changer or flash-to-pass.

You can disable the system from the infotainment home screen by selecting > Auto High Beams.

Driving with IntelliBeam

⚠ Warning

Using high beams in dense exhaust, smoke, fog, snow, road spray, mist, or other airborne obstructions can cause a glare, obstructing your vision. This reduction in visibility can result in a crash. Never use high beams in dense exhaust, smoke, fog, snow, road spray, mist, or other airborne obstructions.

The high-beam headlights adjust according to traffic, preventing glare and providing the best light distribution for other road users.

The system only activates the high beams when driving over 40 km/h (24 mph).

The blue High-Beam On light AUTO appears on the instrument cluster when the high beams are on.

The high-beam headlights remain on, under automatic control, until one of the following situations occurs:

- The vehicle speed drops below 20 km/h (12 mph).
- The outside light is bright enough that high-beam headlights are not required.
- The system detects an approaching vehicle's headlights.
- The system detects a preceding vehicle's taillights.
- You manually disable IntelliBeam.
- You set the headlight control to Off or Parking .

The high-beam headlights may not turn off automatically and must be manually disabled if the system cannot detect another vehicle's lights because of any of the following conditions:

- The other vehicle's lights are missing, damaged, or otherwise undetected.
- The other vehicle's lights are covered or obstructed from view by dense exhaust, smoke, fog, snow, road spray, dirt, mist, or other obstructions.

NOT FOR RESALE

- The windshield is dirty, cracked, or the light sensor is obstructed.
- A heavy vehicle load raises the front end such that the sensor aim is too high to detect lights.
- You are driving on winding or hilly roads.

Headlights Off Reminder

An audible alert sounds upon opening the driver door if the vehicle is off and the headlights or parking lights are still on. To disable the audible alert, turn off the lights.

Daytime Running Lights

Daytime Running Lights make it easier for others to see the front of your vehicle during the day.

The Automatic Headlight System turns the Daytime Running Lights on and off.

When Daytime Running Lights Turn On

The Daytime Running Lights turn on when all the following conditions are met:

- The vehicle is on
- The headlight control is set to Auto
- The light sensor determines it is daytime

The instrument panel lights, taillights, and other exterior lights do not turn on when the Daytime Running Lights are on.

For vehicles first sold in Canada: When not in P (Park), either the Daytime Running Lights or headlights are always on, regardless of the headlight control setting, due to Canadian safety regulations.

When Daytime Running Lights Turn Off

When it begins to get dark, the automatic headlight system turns off the Daytime Running Lights and turns on the headlights.

The Daytime Running Lights turn off when you either turn on the headlights or turn off the vehicle.

For vehicles first sold in Canada, the Daytime Running Lights turn off only when the vehicle is shifted to P (Park) and the headlight control is set to off or .

Automatic Headlight System

The Automatic Headlight System controls the headlights, other exterior lights, and instrument panel lights depending on the outside light level.

To enable the system, set the headlight control to Auto.

- If it is dark enough outside, the system turns on the interior instrument panel lights and the exterior lights, such as headlights, taillights, parking lights, and license plate lights.
- If it is bright enough outside, the system turns off the exterior lights and instrument panel lights and may turn on the Daytime Running Lights.

To turn off the Automatic Headlight System, either turn the headlight control or the vehicle off.

Low Light Conditions During Daylight Hours

When driving through a parking garage, tunnel, or heavy overcast weather, the automatic headlight system may sense a low light level and turn on the headlights. This is normal.

If you start the vehicle in a dark garage, the headlights turn on immediately. If it is light outside when the vehicle leaves the garage, there is a slight delay before the Automatic Headlight System switches over to Daytime Running Lights. During that delay,

NOT FOR RESALE

the instrument cluster may not be as bright as usual. Make sure the instrument panel brightness control is in the full bright position. See *Instrument Panel Illumination Control* ⇨ *145*.

Location of Light Sensor

A light sensor on top of the instrument panel measures the outside light level. See *Instrument Panel Overview* ⇨ *5*.

Do not cover the sensor, otherwise the exterior lights will turn on when not needed.

Lights On with Wipers

If you activate the windshield wipers in the daylight with the vehicle on and the headlight control set to Auto, the headlights, parking lights, and other exterior lights turn on. The transition time for the lights turning on varies based on wiper speed. When the wipers are not operating, these lights turn off.

Set the headlight control to off or Parking to disable this feature.

Hazard Warning Flashers

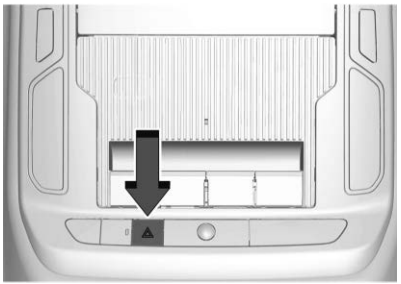

Hazard warning flashers help alert others that you are having trouble. Press the ⚠ button on the overhead console to turn the front and rear turn signal flashers on. Press again to turn them off.

When the hazard warning flashers are on, the turn signal lights do not respond to the turn signal lever.

The hazard warning flashers turn on automatically if the airbags deploy.

Turn and Lane-Change Signals

Raise or lower the turn signal lever until the arrow on the instrument cluster starts to flash in the corresponding direction. See *Instrument Panel Overview* ⇨ *5*.

Changing Lanes: Hold the lever in place until you complete the lane change. Let go of the lever and it returns to its starting position.

If you raise or lower the lever quickly then release it, the turn signal flashes three times. It flashes six times if Tow/Haul mode is active. See *Driver Mode Control* ⇨ *234*.

If you change lanes without using the turn signal, the Lane Keep Assist system, if equipped, may respond. See *Lane Keep Assist (LKA)* ⇨ *301*.

Turning Corners: Move the lever all the way up or down so that it stays in place when you let go. When you complete the turn, bringing the steering wheel back to center will automatically turn off the turn signal.

If the steering wheel did not turn far enough, the turn signal will remain flashing until you move the lever back to its starting position.

NOT FOR RESALE

Turn Signal On Alert

If you leave the turn signal on for more than 1.2 km (0.75 mi), an audible alert sounds at each flash of the turn signal. The message TURN SIGNAL ON also appears in the Driver Information Center. To turn off both the audible alert and message, move the turn signal lever back to its starting position.

Turn Signal Not Working Normally

If the indicator arrow flashes rapidly when using the turn signal, an exterior LED may have burned out. See your dealer for service.

If the exterior LED is not burned out, check the fuse. See *Instrument Panel Fuse Block* ⇨ *362*.

Front Fog Lights

If equipped, front fog lights provide additional illumination below the headlights to help improve visibility in certain weather or road conditions.

The vehicle must be on and the parking lights or headlights must be on for the front fog lights to work.

To turn the fog lights on or off, select Controls > Lights > Front Fog Lights. When the front fog lights are on, the icon appears highlighted and an indicator light on the instrument cluster comes on.

- Some localities have laws that require the headlights to be on along with the fog lights.
- Some localities have laws that require the high beams to be off when the fog lights are on.

Cornering Lights

If equipped, cornering lights come on automatically when the low-beam headlights are on and one of the following occur:

- The turn signals are activated and the vehicle speed is below 40 km/h (25 mph).
- You turn the steering wheel.
- The vehicle is in reverse.

Lighting While in Reverse

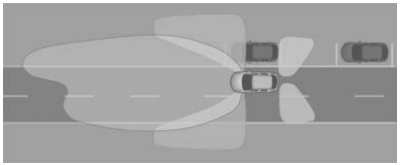

When moving in R (Reverse), the cornering lights activate automatically to add visibility for parking and maneuvering situations.

Task Lighting

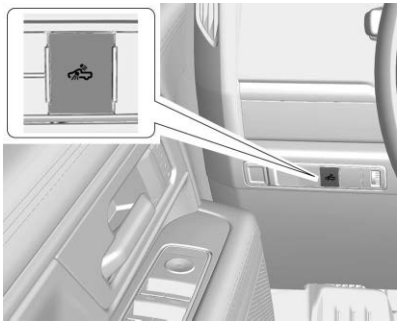

If equipped, task lighting projects light from the outside mirrors away from the vehicle.

NOT FOR RESALE

The button for the task lights is on the instrument panel on the left side of the steering wheel. The button controls the task lights and the cargo lights.

To turn the lights on and off:

1. Place the vehicle in Park (P).
2. Press the button to turn the lights on.
3. Press the button again to turn the lights off.

The button will illuminate to indicate the lights are on.

If the vehicle is taken out of Park (P), the lights will turn off immediately.

If the vehicle is off, the lights will stay on for approximately 20 minutes.

Exterior Cargo Lights

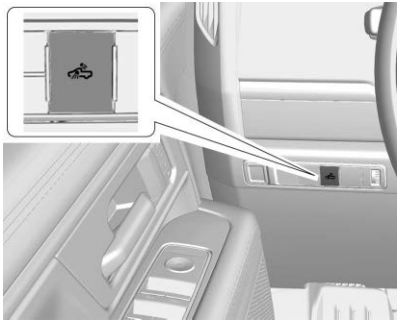

If equipped, the exterior cargo lights provide extra illumination in the cargo area or on the sides of the vehicle.

Become familiar with and follow all state and local laws that apply to cargo light operation.

The button for the cargo lights is on the instrument panel on the left side of the steering wheel. The button controls the cargo lights and the task lights.

To turn the lights on and off:

1. Place the vehicle in Park (P), Neutral (N), or Reverse (R).
2. Press the button to turn the lights on.
3. Press the button again to turn the lights off.

The button will illuminate to indicate the lights are on.

If the vehicle is taken out of Park (P), Neutral (N), or Reverse (R), the lights will turn off immediately.

If the vehicle is off, the lights will stay on for approximately 20 minutes.

Interior Lighting

Instrument Panel Illumination Control

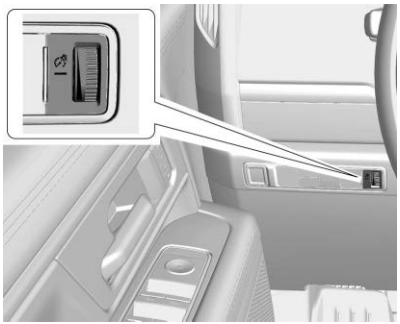

This feature adjusts the brightness of all illuminated controls.

NOT FOR RESALE

: Move the thumbwheel up or down to brighten or dim the lights.

The brightness adjustment functions only at night, or when the headlights or parking lights are on.

Dome Lights

Dome lights provide overhead interior lighting.

To turn the dome lights on or off manually, select > from the app screen on the infotainment display. If equipped, you can also press and hold either of the front reading lights. See *Reading Lights* ⇨ *146*.

Auto Mode

To set the dome lights to either turn on automatically or to stay off when you open a door or press on the remote key:

- Select > Lights.
- Or, if equipped, select > See More Controls > Lights, then select > in the upper corner of the Dome Light menu.

Select the Auto with Door Open box to enable or disable this option.

Reading Lights

Reading lights are located on the overhead console and over the rear seats.

The reading lights are also used as dome lights, and may come on with entry and exit lighting, if enabled. See *Dome Lights* ⇨ *146*.

Press the button to turn a reading light on or off.



Front Reading Lights

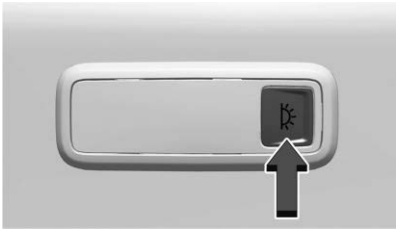

Rear Reading Lights

Lighting Features

Entry Lighting

The entry lighting feature automatically turns on various interior and exterior lights for increased visibility in and around a vehicle.

- The interior lights turn on when pressing on the remote key or opening any doors, and the dome light switch is not in the OFF position. See *Dome Lights* ⇨ *146*.
- Some exterior lights also turn on when pressing on the remote key. Low-beam headlights will only turn on briefly at night, or in areas with limited lighting.

NOT FOR RESALE

- All interior and exterior lights turn off when you press on the remote key or start the vehicle, or will eventually turn off automatically if you do not interact again with the vehicle.

Entry lighting may have an option that can be changed. On the infotainment home screen, select Settings > Vehicle > Lighting.

Exit Lighting

Some exterior lights and interior lights turn on when the driver door is opened after the vehicle is turned off.

The exterior and interior lights remain on for a set amount of time, then automatically turn off.

The interior lights turn on when the vehicle is turned off.

The exterior lights turn off immediately by turning the exterior light control off.

This feature can be changed. On the infotainment home screen, select Settings > Vehicle > Lighting.

Ambient Lighting

If equipped, the ambient lighting feature allows you to customize the color and brightness of certain passenger cabin lights. On the app screen of the infotainment display, select Ambient Lighting.

Choose from the following options:

On/Off

To enable customizable ambient lighting, slide the on-screen toggle to the right. To disable ambient lighting and revert to standard interior lighting, slide the toggle to the left.

Brightness

Select , then tap or or drag your finger across the slider bar to increase or decrease brightness.

Sync Brightness: Select this option to apply the same brightness level to all ambient lighting zones.

Color

Select the pencil icon to the right of the Custom color option, then select the lighting zone you want to personalize. Touch a color to select and apply it from the palette. Repeat for the remaining lighting zones.

Battery Load Management

Electric Power Management estimates the battery temperature and state of charge. It then adjusts the voltage for best performance and extended life of the battery.

When the battery state of charge is low, the voltage raises slightly to quickly bring the charge back up. When the state of charge is high, the voltage lowers slightly to prevent overcharging. As this adjustment occurs, you may see the voltage move up or down on the voltmeter gauge or voltage display, if equipped, on the instrument cluster. This is normal. If there is a problem, an alert will be displayed. See *Instrument Cluster* ⇨ *112*

For all vehicles, the battery can be discharged at idle if the electrical loads are very high. This is because the generator (alternator) may not

NOT FOR RESALE

be spinning fast enough at idle to produce all the power that is needed for very high electrical loads.

A high electrical load occurs when several of the following are on: headlights, high beams, fog lights, rear window defogger, climate control fan at high speed, heated seats, engine cooling fans, trailer loads, and loads plugged into accessory power outlets.

Electric Power Management prevents excessive discharge of the battery by balancing the generator's output and the vehicle's electrical needs. It can increase engine idle speed to generate more power, whenever needed. It can temporarily reduce the power demands of some accessories.

Normally, these actions occur in steps or levels, without being noticeable. In rare cases at the highest levels of corrective action, you may notice these actions and a Driver Information Center message might be displayed. If so, reduce the electrical loads as much as possible. See *Driver Information Center (DIC)* ⇨ *131*.

Battery Power Protection

This feature helps prevent the battery from being drained if you leave the interior dome lights or reading lights on. These lights automatically turn off 10 minutes after you turn the vehicle off. The cargo lights turn off 20 minutes after you turn the vehicle off. The lights will not turn back on again until one of the following actions occurs:

- You start the vehicle.
- You close the doors, then re-open them.

Exterior Lighting Battery Saver

If you leave the parking lights or headlights on manually, they turn off about 10 minutes after you turn the vehicle off. This protects against draining the battery.

To restart the 10-minute timer, set the headlight control to ⏻ and then select ≍ or ≡D.

To keep the parking lights or headlights on for more than 10 minutes, start the vehicle.

NOT FOR RESALE

Infotainment System

Introduction
Introduction 149
Overview 150
Steering Wheel Controls 151
Using the System 151

Radio
AM-FM Radio 153
Satellite Radio 154
Radio Reception 155
Multi-Band Antenna 155

Audio Players
Avoiding Untrusted Media Devices 155
USB Port 155
Bluetooth Audio 156

Media System
Passenger Infotainment 156

Navigation
Using the Navigation System 159
Maps 160
Navigation Symbols 160
Destination 161
Global Positioning System (GPS) 162
Vehicle Positioning 162
Problems with Route Guidance 162

Voice Assistant
Voice Assistant 163

Phone
Bluetooth (Overview) 165
Bluetooth (Pairing and Using a Phone) ... 166
Apple CarPlay and Android Auto 170

Settings
Settings 171
Teen Driver 174

Trademarks and License Agreements
Trademarks and License Agreements 177

Introduction

Read the following pages to become familiar with the features.

⚠ Warning

Taking your eyes off the road for too long or too often while using any infotainment feature can cause a crash. You or others could be injured or killed. Do not give extended attention to infotainment tasks while driving. Limit your glances at the vehicle displays and focus your attention on driving. Use voice commands whenever possible.

The infotainment system has built-in features intended to help avoid distraction by disabling some features when driving. These features may become disabled on the infotainment apps screen when they are unavailable. Many infotainment features are also available through the instrument cluster and steering wheel controls.

NOT FOR RESALE

Before driving:

- Become familiar with the operation, center stack controls, steering wheel controls, and infotainment display.
- Set up the audio by presetting favorite stations, setting the tone, and adjusting the speakers.
- Set up phone numbers in advance so they can be called easily by pressing a single control or by using a single voice command.

See *Distracted Driving* ⇨ *190*.

Active Noise Cancellation

If equipped, Active Noise Cancellation reduces engine noise in the vehicle's interior. Active Noise Cancellation requires the factory-installed audio system, radio, speakers, amplifier (if equipped), induction system, and exhaust system to work properly. Deactivation may be required by your dealer if related aftermarket equipment is installed.

Overview

Infotainment System

The infotainment system is controlled by using the infotainment display, controls on the center stack, steering wheel controls, and voice recognition, if available.



Base Trim



Mid/Uplevel Trim

1. ⏻ (Power)
   - Press to turn the power on when off.
   - Press and hold to turn the power off.
   - Press to mute/unmute the system when on.
   - Turn to decrease or increase the volume.

Infotainment App Screen

Touch ⠿ to access the infotainment app screen. The infotainment app screen is where vehicle application icons are accessed. Some applications are disabled when the vehicle is moving.

Swipe left or right across the display to access the pages of icons.

Managing Infotainment App Screen Icons

1. Touch and hold any of the infotainment app screen icons to enter edit mode.
2. Continue holding the icon and drag it to the desired position.
3. Release your finger to drop the icon in the desired position.

NOT FOR RESALE

Move an Icon to Another Page

1. Drag the icon to the edge of the display toward the desired page.
2. Continue dragging and dropping application icons as desired.

Move an Icon to the Application Tray

Drag the icon intended to be moved to the application tray.

Steering Wheel Controls

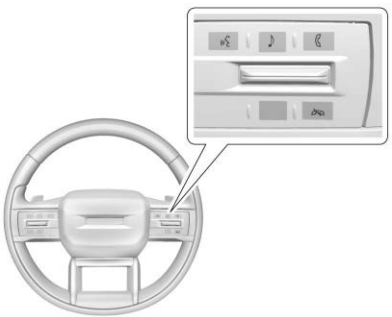

If equipped, some audio controls can be adjusted at the steering wheel.

: Press to start voice recognition. See *Bluetooth (Overview)* ⇨ *165 Bluetooth (Pairing and Using a Phone)* ⇨ *166*.

: Press to show the audio sources list.

: Press to answer an incoming phone call or show the recent phone call list when not in a call.

: Press to decline an incoming call or end a current call. Press to mute or unmute the infotainment system when not on a call.

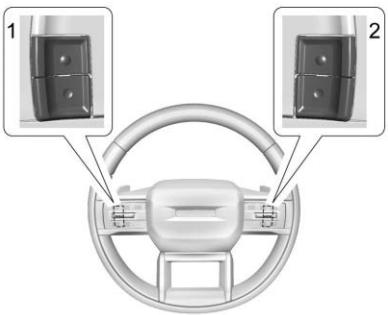

The favorites and volume switches are on the back of the steering wheel.

1. Favorite: When on a radio source, press to select the next or previous audio broadcast favorite. When listening to a media device, press to select the next or previous track.
2. Volume: Press to increase or decrease the volume.

Using the System

Audio

Touch the Audio icon to display the active audio source page. Examples of available sources may include AM, FM, SiriusXM (if equipped), USB, AUX, and Bluetooth.

Phone

Touch the Phone icon to display the Phone main page. See *Bluetooth (Overview)* ⇨ *165 Bluetooth (Pairing and Using a Phone)* ⇨ *166*.

Maps

If equipped, touch the Maps icon to display the navigation map. See *Using the Navigation System* ⇨ *159*.

NOT FOR RESALE

Google Assistant or Gemini

If equipped, touch the Google Assistant or Gemini icon to open the Google Assistant or Gemini app. See *Voice Assistant* ⇨ *163*.

Google Play

If equipped, touch to download some of your favorite apps in your vehicle. Downloading apps on Google Play requires you to sign into a Google Account and have internet connectivity in your vehicle. Some third-party apps require a separate account and, in some cases, a paid subscription for in-vehicle access.

Settings

Touch the Settings icon to display the Settings menu. See *Settings* ⇨ *171*.

Apple CarPlay

If equipped, touch the Apple CarPlay icon to activate Apple CarPlay after a supported device is connected. See *Apple CarPlay and Android Auto* ⇨ *170*.

Android Auto

If equipped, touch the Android Auto icon to activate Android Auto after a supported device is connected. See *Apple CarPlay and Android Auto* ⇨ *170*.

Infotainment System Reboot

Just like a smartphone, the infotainment system can be rebooted .

1. Place the vehicle in park.
2. Press and hold the End Call button on your steering wheel for about 20 seconds. A service screen pop up may appear. You do not need to select any options.
3. Continue to hold the End Call button until the center display turns off.

After about 10 seconds, a welcome screen will appear and the infotainment system will reboot.

Application Tray

The application tray is on the upper portion of the display and shows six applications by default but can hold up to eight applications.

Infotainment Display Features

Infotainment display features show on the display when available. When a feature is unavailable, it may gray out and be disabled. When a feature is touched, it may highlight.

Infotainment Gestures

Use the following finger gestures to control the infotainment system.

Touch/Tap

Touch/tap is used to select an icon or option, activate an application, or change the location inside a map.

Touch and Hold

Touch and hold can be used to move or delete an application.

Drag

Drag is used to move applications on the infotainment apps screen, or to pan the map. To drag the item, it must be held and moved along the display to the new location. This can be done up, down, right, or left. This feature is only available when vehicle is parked and not in motion.

NOT FOR RESALE

Nudge

Nudge is used to move items a short distance on a list or a map. To nudge, hold and move the selected item up or down to a new location.

Fling or Swipe

Fling or swipe is used to scroll through a list, pan the map, or change page views. Do this by placing a finger on the display then moving it rapidly up and down or right and left.

Spread

Spread is used to zoom in on a map, certain images, or a web page. Place finger and thumb together on the display, then move them apart.

Pinch

Pinch is used to zoom out on a map, certain images, or a web page. Place finger and thumb apart on the display, then move them together.

Cleaning High Gloss Surfaces, Vehicle Information, and Radio Displays

See *Interior Care* ⇨ *405*.

Radio

AM-FM Radio

Playing the Radio

From the infotainment apps screen, touch the Audio icon to display the now playing screen for the active audio source. Touch the source button such as FM, AM, or SiriusXM (if equipped), to change your source.

Finding a Station

Seeking a Station

From the FM, AM, or SiriusXM (if equipped), screen, touch the back or forward buttons to search for the previous or next strong station.

Tune

Touch on the infotainment display to enter the Tune screen. Enter a frequency using the keypad.

From the FM, AM, or SiriusXM (if equipped), screen entering a valid AM or FM frequency or SiriusXM channel will automatically tune to the new station but not close the Tune screen.

Touch the Go button or frequency in the list to begin playing the station. The tune page will close and return to the now playing screen.

Storing Radio Station Favorites

Saved favorite stations will show on the left of the now playing screen.

FM, AM, or SiriusXM (if equipped), favorites can be stored by pressing and holding a favorite slot.

Audio Settings

Audio settings vary by region.

From the now playing screen, touch and the following may display.

Sound

- Equalizer
- Fade/Balance
- Sound Mode (if equipped)

Bose AudioPilot

If equipped, adjusts the volume based on the noise inside the vehicle and vehicle speed.

Manage Radio Favorites

Displays a list of audio favorites that can be moved or deleted.

NOT FOR RESALE

Radio Text (RDS)

When on, radio station name and messages from radio stations will be shown.

Radio Text Categories

When on, category information about current radio content will be shown.

Radio Text – Radio Data System (RDS)

Radio Data System (RDS) relies on receiving specific Radio Data System (RDS) information from radio stations and only works when the information is available. It is possible that a radio station could broadcast information that causes the radio to work improperly.

In addition, Radio Data System (RDS) features are region and country of sale specific. This means specific Radio Data System (RDS) content may not be available in your listening area or in the country you operate the vehicle.

To turn Radio Data System (RDS) features on or off, see "Audio Settings" previously.

The following Radio Data System (RDS) features may be supported by radio broadcasters in your listening area:

Radio Text Features

- Display radio station name
- Display messages from radio stations
- Provide radio station category information (when available)

Satellite Radio

SiriusXM Radio Service

If equipped, vehicles with a SiriusXM radio subscription can receive SiriusXM programming.

SiriusXM radio has a wide variety of programming and commercial-free music, coast to coast, in digital-quality sound. In the U.S., see www.siriusxm.com or call 1-888-601-6296. In Canada, see www.siriusxm.ca or call 1-888-539-7474.

When SiriusXM is active, the channel name, number, song title, and artist appear on the display.

SiriusXM with 360L

SiriusXM with 360L interface has enhanced in-vehicle listening experience for subscribers. The experience now offers more categories and system-learned recommendations toward discovering more personalized content.

To use the full SiriusXM 360L program, including streaming content and listening recommendations, OnStar Connected Access is required and Terms and Conditions must be accepted. No paid data subscription is required. Connected vehicle services vary by model and require a complete working electrical system, cell reception, and GPS signal.

Reference the SiriusXM user guide for use and subscription information.

Playing SiriusXM Content

Touch ◀◀, ❚❚, ▶ or ▶▶ on the audio now playing screen to rewind, pause, play, or fast forward content.

Finding a Channel

From the SiriusXM now playing screen, touch ◁CH or CH▷ to open the SiriusXM tuner channel list.

NOT FOR RESALE

To directly tune to a channel, touch the Tune icon to enter a channel number using the keypad.

Browsing Content

Touch ☰ to view different browsing content, including:

Channels, Music, On Demand shows and episodes, Sports and News content.

SiriusXM Settings

From the SiriusXM now playing screen, touch the user settings icon to display the SiriusXM settings.

The settings include subscription information, help and support, and listener preferences.

Radio Reception

Unplug any electronic devices from the accessory power outlets if there is static interference.

FM

FM signals only reach about 16 to 65 km (10 to 40 mi). Although the radio has a built-in electronic circuit that automatically works to reduce interference, some static can occur, especially around tall buildings or hills, causing the sound to fade in and out.

AM

The range for most AM stations is greater than FM, especially at night. The longer range may also cause station frequencies to interfere with each other. Storms and power lines may also interfere with radio reception. Try reducing the treble on the radio if static interference occurs.

SiriusXM Satellite Radio Service

If equipped, SiriusXM Satellite Radio Service provides digital radio reception. Tall buildings or hills can interfere with satellite radio signals, causing the sound to fade in and out. In addition, traveling or parking under heavy foliage, bridges, garages, or tunnels may cause loss of the SiriusXM signal for a period of time. Some cellular services may interfere with SiriusXM reception causing signal loss.

Mobile Devices

Making or receiving calls, charging, or just having a mobile device on may cause static interference. Unplug or turn off any mobile devices if this happens.

Multi-Band Antenna

The multi-band antenna may be used for radio, navigation, and other communication systems, depending on the equipped options. To ensure clear reception, keep the antenna clear of obstructions like snow and ice. An open sunroof or roof-mounted cargo can also affect reception.

Audio Players

Avoiding Untrusted Media Devices

Avoid using untrusted mobile and USB media devices that may negatively affect system operation or performance.

USB Port

Caution
To avoid vehicle damage, unplug all accessories and disconnect all accessory cables from the vehicle when not in use. Accessory cables left plugged into the (Continued)

NOT FOR RESALE

Caution (Continued)

vehicle, unconnected to a device, could be damaged or cause an electrical short if the unconnected end comes in contact with liquids or another power source such as the accessory power outlet.

The vehicle may be equipped with multiple USB ports. Music may be played from a connected USB device. Data enabled ports are labeled as and may also be used for charging. Charging only ports are labeled as .

USB Audio

To play music:

1. On the audio now playing screen, select Source> USB.
2. If there is no device connected, connect the device.
3. Supported media content will appear on the display.

Bluetooth Audio

A connected Bluetooth mobile device can play music.

Use the infotainment controls to adjust volume and select songs. Check the volume setting on the infotainment system or the connected mobile device if Bluetooth is selected and no volume is present.

To play music via Bluetooth:

1. On the audio now playing page, touch source and select the desired Bluetooth mobile device.
2. If there is no mobile device connected, follow the screen prompts to pair the device.
3. Supported media content will appear on the display.

Manage Bluetooth Devices

Managing Bluetooth devices allows you to add, delete, or select another paired mobile device.

Only one Bluetooth mobile device can be active at a time.

Some mobile devices support sending Bluetooth music information to display on the radio. For more information about supported Bluetooth features, visit your brand website. See *Online Account and Customer Support* ⇨ *428* for details.

Media System

Passenger Infotainment

If equipped, Passenger Infotainment allows passengers to play content on the touch screen display from the front passenger seat.

Passenger Infotainment includes HDMI ports, Bluetooth headphone support, video support and use of the web browser, if equipped.

The Passenger Infotainment displays operate best in temperatures above −20 °C (−4 °F) and below 55 °C (131 °F).

System Operation

Press the passenger infotainment switch, if equipped, located on the center stack to move the display to full screen. See *Instrument Panel Overview* ⇨ *5*.

Tap anywhere on the equipped passenger screen to power on.

The screen can be turned on and off through the infotainment screen entertainment hub or by touching the power icon.

Touch the home icon on the display to return to the default screen.

NOT FOR RESALE

Playback of any media playing through that specific screen is paused when the screen is turned off.

The passenger screen can be locked via the entertainment hub on the infotainment screen.

Press the switch or touch the icon on the passenger display to minimize the screen.

Entertainment Hub Overview

Select the icon on the infotainment home screen to open the Entertainment Hub.

: Select to power off the passenger screen.

: Select to mute headphone audio for the selected passenger screen.

: Select to lock the selected passenger screen.

Entertainment Hub Settings

Select on the Entertainment Hub Overview screen to access the Settings menu.

The menu may contain the following:

Remember Screen Power Status

Select to have screens automatically power on when the vehicle is started.

Factory Reset Passenger Screens

Select to reset the screen to factory settings.

Restart Passenger Screens

Select to restart passenger screens.

Voice-Over

If equipped, Passenger Infotainment has a Voice-Over feature to benefit the visually impaired.

When activated, Voice-Over provides audible feedback to the user about which area on the screen they are touching.

Select Voice-Over to select which equipped screen will use Voice-Over. Voice-Over turns off every time the vehicle is turned off.

Account

Select to show the vehicle data plan.

Legal

Select to view the terms of use.

App View

- Applications (if equipped)
- Web Browser (if equipped)
- HDMI
- Settings

Quick Controls

Select to access Quick Controls.

- Adjust the Brightness of the selected screen.
- Select the audio source, headphones or speakers.
- Adjust the volume of the selected audio source.
- Add Headphones and adjust headphone settings.

Applications and Web Browser

Select to stream media and/or view web content. An active service plan is required.

HDMI Input

An HDMI cable is required to connect an HDMI device to the Passenger Infotainment displays. The HDMI inputs allow connection to video games, disc players, cameras, smartphones, tablets, streaming devices, and A/V dongles that have HDMI (version 1.4a) outputs.

Settings

Select to access the Settings menu.

NOT FOR RESALE

The menu may contain the following:

Screen Brightness

Adjust the Brightness of the selected screen.

Bluetooth Headphones

To pair Bluetooth headphones:

1. Select Bluetooth Headphones.
2. Select Add Headphones.
3. Set the headphones to Bluetooth pairing mode. Once recognized by the system, the Bluetooth headphones are displayed on the list of available headphones.
4. Select the Bluetooth headphones from the list. Select Options to Rename Headphones.

   Two devices can be paired can per screen.

To disconnect headphones, select Options. Select Disconnect or Forget Headphones.

Quick Remote

A remote may be used to navigate the passenger display screen while the vehicle is parked or in motion. This remote will appear on a mobile device.

To connect the remote, connect to the vehicle's Wi-Fi, follow on-screen prompts, and scan the QR code. Once connected, a trackpad will be available to navigate the passenger screen.

Additional remote features may also be available depending on the app selected from the home screen.

Voice-Over

If equipped, this feature benefits from the visually impaired.

When enabled, Voice-Over provides audible feedback about which area on the screen is selected, identifying active buttons, and providing information feedback of screen identification, current status, list content, metadata, and pop-up information. Double tap anywhere on the screen to hear the last single touched, audibly announced, selection.

Select Voice-Over to select which equipped screen will use Voice-Over. Voice-Over turns off every time the vehicle is turned off.

Factory Reset Screen

Select to reset the screen to factory settings, log out of apps, erase paired headphones and clear the web browser cache.

Open Source License

Select to show the license information.

Legal

Select to show the legal information.

About

Select to show System version.

Consumer Ports

If equipped with a front passenger display, the Consumer Ports are located in the center console pocket on the passenger side. This includes an HDMI port and a USB-C charge port only.

The HDMI input allows an HDMI A/V cable to be connected from an auxiliary device such as a camcorder, video game system, or Apple device. A cable from Apple is required for Apple devices.

Touch the HDMI port that the external device was connected to on the home screen.

For HDMI devices that support USB charging, the USB port can be used as a power source.

Content from this HDMI port is not accessible through the infotainment display.

NOT FOR RESALE

To use the HDMI input:

1. Connect the auxiliary device with an HDMI cable.
2. Power on both the auxiliary device and the passenger screen.
3. Select HDMI as the source.

Troubleshooting

No power: The vehicle might not be on.

There is no sound from the headphones with the indicator light on: The vehicle might not be on.

- Make sure the headphones have sufficient charge. Plug the headphones to a USB-C port to charge.
- Check to see if headphones are paired to the screen.

If the steps above do not work, then unpair the headphones from the screen, turn the headphones off, turn them back on, and attempt to pair them. See “Bluetooth Headphones” previously in this section.

Video Distortion

Video distortion can occur when operating cellular phones, scanners, CB radios, Global Positioning Systems (GPS), two-way radios, mobile faxes, or walkie talkies.

It might be necessary to turn off the video player when operating one of these devices in or near the vehicle.

Navigation

Using the Navigation System

Google Maps provides the navigation software in this vehicle. This section provides a general overview and is subject to change. For the most current functional information, visit g.co/mapsincar.

To begin using the system, you must accept the Terms and Conditions.

Internet Connectivity

Google Maps requires an active subscription data plan to deliver full functionality, including offline map availability.

With an applicable connected services plan, Google Maps can automatically download offline maps before losing connectivity, allowing you to continue navigating without internet connectivity.

Profiles

Sign in to your Google Account to receive personalized services such as saved locations, custom maps, and real-time recommendations. Google Account information appears as available.

To log into a profile, see Accounts under *Settings* ⇨ *171*.

Voice Assistant

If equipped, you can control Google Maps using voice commands. See *Voice Assistant* ⇨ *163*.

Language and Units

To change the language and units, see *Settings* ⇨ *171*.

Mute Settings

During active route guidance, Google Maps provides audible voice directions and traffic alerts. These can be muted as needed. In the Google Maps app, select Settings > Mute

NOT FOR RESALE

settings to access the guidance audio options. Alternatively, mute audible voice directions and traffic alerts by tapping the sound icon on the navigation map screen during active navigation.

Compass

You can adjust Google Maps orientation by selecting the compass icon. Select to change between the direction currently traveling, north, and route overview.

To recenter the map to the current location, select the location icon.

Super Cruise

If equipped, Super Cruise highlights routes in a specific outline. See *Super Cruise* ⇨ *263*.

Trailer Navigation

If equipped, Trailer Navigation plans a route to your destination that is drivable with your trailer. See *Destination* ⇨ *161*.

Maps

Auto-Downloaded Maps

Google Maps downloads maps automatically for use when not connected to the Internet. Offline maps make map data available to vehicle features regardless of connectivity.

To turn on auto-download:

1. Open Google Maps.
2. Touch the Settings icon.
3. Touch Privacy center, then select Offline maps.
4. Select Auto-download offline maps.
5. Check the Internet connection and wait for the download to finish.

Downloading Offline Maps

1. Open Google Maps.
2. Touch Settings, then Offline maps.
3. Touch the Select your own map square icon.
4. Adjust the map to cover the desired area to download.
5. Touch Download.

Navigation Symbols

The following are the most common symbols that may appear in Google Maps.



This indicates the vehicle's current location and direction on the map.



The destination pin marks the location of the final destination. Touch the pin to view the destination address or to add it or remove it from the Favorites list. Hide the information by touching the pin one more time. It will automatically time out if no action is taken.

A second pin in the menu is the route overview. Touch this pin to show more details of the destination or to remove the destination.

NOT FOR RESALE

Destination

Searching for a Destination

A destination can be searched using Google Assistant.

To search for a destination without Google Assistant:

1. Open Google Maps.
2. Touch the Search field.
3. Enter the destination.
4. Touch the Navigation icon.

Alternate Routes

Alternate routes are displayed as separate lines. While in either Turn-by-Turn navigation or on the route overview, touch the suggested alternate route.

Adding a Stop on Route by Voice

1. While in Turn-by-Turn navigation, touch the Search icon at the bottom.
2. Touch the Google Assistant mic icon and say the destination to search by voice.
3. Select the desired search result from the list.
4. Touch the Add stop icon.

Adding a Stop on Route by Category

1. While in Turn-by-Turn navigation, touch the Search icon at the bottom.
2. Select a category.
3. Select the desired search result from the list.
4. Touch the Add stop icon.

Adding a Home or Work Address

To edit a home or work address, an account must be logged in. See Profiles and Accounts under *Settings* ⇨ *171*.

1. Open Google Maps.
2. Touch Settings, then touch Edit home or work.
3. Enter the address.

Search by Category

Destinations can be searched by category, such as restaurant or grocery store.

1. Open Google Maps.
2. Touch the search bar.
3. Touch Categories, then select a category.
4. Touch the desired location, then touch the Navigation icon.

Avoid Tolls, Highways, or Ferries

1. Open Google Maps.
2. Touch the Settings icon.
3. Select Route options.
4. Select the desired options and then touch X to close.

An Alternative Way for General Route Options

1. During active route guidance, touch Route Overview.
2. Select Route options.
3. Select the desired option and then touch X to close.

Traffic Layers

1. Open Google Maps.
2. Touch the Settings icon.
3. Touch Traffic to turn on or off.

Trailer Navigation

If equipped, Trailer Navigation plans a route to your destination that is drivable with your trailer. The system is designed to help avoid bridges, overpasses, and other potential hazards that are not drivable with your trailer.

NOT FOR RESALE

Select Trailering App on the infotainment display and follow the on-screen instructions for trailer profile setup to save your trailer dimensions.

For additional information, see "Trailering App" in the Trailer Towing Supplement. See *General Towing Information* ⇨ *316*.

Global Positioning System (GPS)

GPS uses satellite and various vehicle signals to determine the current vehicle position for the navigation system.

Interference from the satellite condition, road configuration, condition of the vehicle, and/or other circumstances can affect the navigation system's ability to determine the accurate position of the vehicle.

This system might not be available or interference can occur if any of the following are true:

- Signals are obstructed by tall buildings, trees, large trucks, or a tunnel.
- Satellites are being repaired or improved.

For more information if GPS is not functioning properly, see *Problems with Route Guidance* ⇨ *162*.

Vehicle Positioning

At times, the position of the vehicle on the map could be inaccurate due to one or more of the following reasons:

- The road system changes.
- You are driving on slippery road surfaces such as sand, gravel, or snow.
- You are traveling on winding roads or long, straight roads.
- The vehicle is approaching a tall building or a large vehicle.
- The vehicle is running parallel to a freeway on surface streets.
- A vehicle carrier or ferry is transferring the vehicle.
- The current position calibration is set incorrectly.
- You are traveling at high speed.
- You are changing directions often, or the vehicle is on a turntable in a parking lot.
- You are driving into or exiting out of a parking lot, garage, or a lot with a roof.
- The vehicle is unable to receive a GPS signal.
- The vehicle has a roof carrier.
- The vehicle has tire traction devices.
- The vehicle has newly replaced or worn tires.
- The tire pressure is incorrect.
- The navigation system is using map data for the first time after an update.
- The 12-volt battery has been disconnected for several days.
- You are driving in heavy traffic at low speeds and the vehicle is stopping and starting repeatedly.

Problems with Route Guidance

Incorrect route guidance can occur under one or more of the following conditions:

- Missing a turn on the indicated road.
- Turning at an intersection.
- Recent changes to roads, or roads not listed in Maps.

Additionally, route guidance may be unavailable if:

- Using automatic rerouting for the next right or left turn.

NOT FOR RESALE

- Regulations (time, season, construction zone, etc.) prohibit vehicle entry.
- The route is not found.

When navigating to a destination that does not pass through the set waypoint, the system may automatically recalculate the route to return to the waypoint.

To recalibrate the map position, park in a safe, open area free from large obstructions, with the vehicle on for two to five minutes until the position updates.

Voice Assistant

If equipped, the vehicle's built–in Google Assistant or Gemini allows for hands-free use of media and messaging, navigation and climate control functionality in the vehicle. To activate, quickly press and release on the steering wheel, touch Google Assistant or Gemini on the infotainment app screen, or use the wake words "Hey Google" or "OK Google." Google Assistant or Gemini must be set as the default assistant for steering wheel and wake word activation to work.

However, not all features within these areas are supported by voice commands and requires the user to have a valid data subscription plan or be able to connect to an external Wi-Fi in order to use the Google Assistant or Gemini features.

Using Voice Assistants

Voice assistant becomes available once the system is initialized. This begins when the vehicle is turned on. Initialization may take a few moments.

1. Quickly press and release on the steering wheel controls, touch Google Assistant or Gemini from the app screen on the infotainment display, or use the wake words "Hey Google" or "OK Google" to activate voice assistant. Google Assistant or Gemini must be set as the Default Assistant for the and the wake word options to work.
2. Clearly speak one of the commands described later in this section.

Canceling Google Assistant or Gemini

- Press on the steering wheel controls to cancel the Google Assistant or Gemini request.

Helpful Hints for Speaking Commands

Voice assistant identifies commands that are naturally stated in sentence form, or direct commands that state the application and the task.

For best results:

- Speak the command naturally, not too fast, not too slow.
- Use direct commands without a lot of extra words. For example, "Call <name> at work," "Play" followed by the artist or song name, or "Play" followed by the radio station number.

Direct commands are more clearly understood by the system. An example of a direct command is "Call <number>."

If a cell phone number was saved with a name and a place, the direct command should include both. For example "Call <name> at work."

Voice Assistants for the Radio

When voice is started, the voice recognition commands for AM, FM, SiriusXM (if equipped), and media apps (if supported) are available.

NOT FOR RESALE

"Play <AM frequency> AM": Tune to the radio station frequency identified in the command (like "nine fifty").

"Play <FM frequency> FM": Tune to the radio station frequency identified in the command (like "one oh one point one").

"Play channel <SiriusXM channel number> on SiriusXM" : Tune to the SiriusXM radio station channel number identified in the command. This command may require an online connection.

"Play <SiriusXM channel name> on Sirius XM": Tune to the SiriusXM radio station channel name identified in the command. This command may require an online connection.

"Play <Media> on <Audio Source>" : Play media like a song or channel using a specified audio source such as Pandora or Spotify. This command may require an online connection.

Voice Assistants for Bluetooth

Make sure the phone is paired using Bluetooth to use the phone related voice commands.

"Call <contact name>": Initiate a call to a stored contact. The command may include location if the contact has location numbers stored.

"Call < phone number>": Initiate a call to a phone number of seven digits or 10 digits.

"Send a message to <contact name>": Send a message to a stored contact.

Voice Assistants for Navigation

Navigation commands can be used to start, cancel route, or add way points/POI.

"Navigate to <destination address>": Initiate navigation to the address in the command.

"Find a <Place of Interest>": Find and initiate navigation to a POI in the command.

"Add <destination> on my way": Adds a way-point to the current route.

"Take me home": Starts navigation to Home location set in Google maps.

Onboard Vehicle Commands

These commands can be used to adjust vehicle temperature, control window defrosters, etc.

"Turn on the A/C": Turns on the air conditioning.

"Set temperature to <desired number> degrees": Set to a specific temperature inside your vehicle.

Phone Assistant Voice Recognition

While a mobile phone is connected via Bluetooth, press and hold on the steering wheel controls until you hear a response from the phone's voice assistant , which will launch the voice assistant on the connected mobile phone (e.g., Google Assistant, Google Gemini, Siri, etc.).

Google Gemini

If equipped, Google Gemini provides a smarter, more intuitive AI assistant. With Gemini, you can speak naturally without memorizing commands or repeating context.

Example commands to try:

Communication: "Hey Google, send a message to [name] to let her know that I'm bringing dessert and add a cupcake emoji to it."

Entertainment: "Hey Google, can you help me create a road trip playlist? I want something upbeat, about 3 hours long, that's good for both me and the kids."

Navigation : "Hey Google, take me to the nearest post office. Oh, and add a stop for some good coffee along the way."

NOT FOR RESALE

Gemini Live: Live is a conversational experience with Gemini. Just tap the Gemini Live button from the Gemini voice plate or say, "Hey Google, let's talk" to start a free-flowing conversation or say "Can you help us brainstorm ideas for a family holiday? Somewhere warm, full of adventure, without a long flight." To end a live session. Tap the "X" on the voice plate, for use the end call button on the steering wheel.

Vehicle Knowledge: Google Gemini is a general AI assistant. It may not be knowledgeable about every GM vehicle, and some features or responses may vary by vehicle and availability. For vehicle-specific information, always refer to this Owner's Manual and the in-vehicle displays.

Phone

Bluetooth (Overview)

The vehicle's Bluetooth system can interact with a mobile device to:

- Place and receive calls in a hands-free mode.
- Share the device's address book or contact list with the vehicle.
- Stream audio (music, podcasts).
- Notify receipt and reply to text messages depending on phone type.

To minimize driver distraction, before driving, and with the vehicle parked:

- Become familiar with the features of the mobile device. Organize the phone book and contact lists clearly and delete duplicate or unused entries.
- Review the controls and operation of the infotainment system.
- Pair mobile device(s) to the vehicle. The system may not work with all mobile devices. See "Pairing" later in this section.

Vehicles with a Bluetooth system can use a Bluetooth-capable mobile device with a Hands-Free Profile to make and receive phone calls. The infotainment system and voice recognition are used to control the system. The system can be used while the vehicle is on. The range of the Bluetooth system can be up to 9.1 m (30 ft). Not all mobile devices support all functions and not all mobile devices work with the Bluetooth system. See *Online Account and Customer Support* ⇨ *428* for more information about compatible mobile devices.

Controls

Use the controls on the infotainment display and the steering wheel to operate the Bluetooth system.

Steering Wheel Controls

: Press and hold until you hear a response from the phone's voice assistant to start voice recognition on your mobile phone that is connected through Bluetooth. If there is an incoming call, then a press and release will answer the call.

: Press to end a call, decline a call, or cancel an operation. Press to mute or unmute the infotainment system when not on a call.

Infotainment System Controls

For information about how to navigate the menu system using the infotainment controls, see *Using the System* ⇨ *151*.

Audio System

When using the Bluetooth system, sound comes through the vehicle's front audio system speakers and overrides the audio system. The volume level while on a mobile device phone call can be adjusted by pressing the steering wheel volume controls or the volume

NOT FOR RESALE

controls for the infotainment system. The adjusted volume level remains the same for later calls. The volume cannot be lowered beyond a certain level.

Bluetooth (Pairing and Using a Phone)

Pairing

To use a Bluetooth-enabled mobile device, you must first pair it with the vehicle's Bluetooth system. See the devices user guide for Bluetooth functions before pairing the device.

Pairing Information

- Select the phone icon on the infotainment app screen.
- If no mobile device is paired, the infotainment display will show the Manage Phones option. Select this option and the Phones screen will display. See "Pairing a Phone" later in this section.
- A Bluetooth mobile device with music capability can be paired with the vehicle as both a phone and a music player.
- Up to 10 devices can be paired to the Bluetooth system.
- The pairing process is disabled when the vehicle is moving.
- Pairing only needs to be completed once, unless the mobile device information changes or is deleted from the system.
- If a previously paired mobile device is not connecting to the Bluetooth system, try forgetting the mobile device on the vehicle's infotainment system and forgetting the vehicle in the Bluetooth settings of the mobile device. Then repeat the pairing process.
- If multiple paired mobile devices are within range, the system connects to the one set as First to Connect. If none are set, it connects to the last used mobile device. To switch devices, see "Connecting to a Different Phone" later in this section.

Pairing a New Device

1. Open your mobile device's Bluetooth settings to start the pairing process.
2. On the infotainment app screen, select Settings > Connections > Devices to reach the device list.
3. Select "Add Device" and/or (+).
4. All nearby compatible Bluetooth devices will appear on the screen. Select the device you want to pair.
5. If the code on the device and vehicle screen match, select "Pair" on both.
6. Check your device for prompts. If prompted to sync contacts, select "Always Allow" or "Accept". Your device contacts and phone app features will not be available if not accepted.

Repeat steps 1–6 to pair additional phones.

Reconnect a Previously Paired Device

1. From the infotainment app screen, select Settings > Connections > Devices.
2. Tap the device card you want to reconnect.

Troubleshooting

If a previously paired device will not reconnect via Bluetooth:

1. Forget the device in the vehicle.
   1.1 From the infotainment app screen, select Settings > Connections > Devices.

NOT FOR RESALE

1.2 Choose the device you want to forget, and then select Options > Forget Device.

1.3 Confirm your selection.

2. Forget the vehicle on the device. Open the Bluetooth settings, look for the vehicle name, and follow the option to forget.
3. Select "Add Phone" and follow the "Pairing a New Device" steps previously in this section.

If the device name does not appear on the vehicle screen:

- Open Bluetooth settings. The settings must remain open to pair the device.
- Make sure Bluetooth is set to "On" in device settings.
- From the infotainment app screen Select Settings > Connections > Devices to return to the device list and restart the pairing process.
- Turn the device off and then back on, and repeat the pairing process.

First to Connect Paired Phones

If multiple paired phones are within range, the system connects to the one set as First to Connect. To enable a paired phone as the First to Connect phone:

1. Make sure the phone is on.
2. From the infotainment app screen, select the Settings > Connections > Phone .
3. Select Options under the connected phone.
4. Select First to Connect and set to On.

Phones and mobile devices can be added, removed, connected, and disconnected. A sub-menu will display whenever a request is made to add or manage phones and mobile devices.

Accessing the Device List Screen

There are two ways to access the device list screen:

Using the Settings Icon:

Select the Settings icon on the infotainment app screen, then select Connections > Devices.

Using the Phone Icon:

Select the Phone icon on the infotainment app screen, then select > Connected Phone.

Disconnecting a Connected Phone

To disconnect a phone:

1. Open the Device List Screen. See "Accessing the Device List Screen" previously in this section.
2. Select Option on the phone card to show the mobile device's settings.
3. Select the prompt to disconnect the phone.

Deleting a Paired Phone

To delete a paired phone:

1. Open the Device List Screen. See "Accessing the Device List Screen" previously in this section.
2. Select Option on the phone card to show the mobile device's settings.
3. Select Forget Phone.

Connecting to a Different Phone

To connect to a different phone, the new phone must be in the vehicle and paired to Bluetooth.

1. Open the Device List Screen. See "Accessing the Device List Screen" previously in this section.

NOT FOR RESALE

2. Select the new phone you want to connect to from the list of available phones. See "First to Connect Paired Phones" previously in this section.

Switching Between Handset and Hands-Free Mode

To switch between handset or hands-free mode:

- While the active call is hands-free, select the Audio Output option, then select Phone to switch to the handset mode.

  The mute icon will not be available or functional while Handset mode is active.

- While the active call is on the handset, select the Audio Output option, then select Car Speakers to switch to the hands-free mode.

Making a Call Using Contacts

Calls can be made through the Bluetooth system using personal phone contact information for all phones that support the Phone Book feature. Become familiar with the phone settings and operation and that the phone is set to allow the sharing of contacts over Bluetooth with the vehicle. Verify the phone supports this feature and that the phone is set to allow the sharing of contacts over Bluetooth with the vehicle.

The Contacts menu accesses the phone book stored in the phone.

To make a call using the Contacts menu:

1. Select the Phone icon on the infotainment app screen or on the application tray near the left of the display.
2. Select Contacts.

   If a contact has more than one assigned number, a window will appear with the option to choose a phone number from a list. Select the preferred number to call and then confirm if the selection is "Just once" or "Always". By choosing "Always" the selection made will remain the default number assigned to this contact for as long as the phone is connected to the vehicle.
3. There are two methods to search for contacts:
   - Search bar – Select the search icon on the top right of the Phones window and type the name or number of the contact on the keyboard. Search results will be displayed corresponding to the user input. Select the name to call.
   - Scroll – Select the list and scroll, or use the scrollbar on the left side of the Phones window. Select the name to call.

Making a Call Using the Recents Menu

The Recents menu accesses the recents call list from your phone.

To make a call using the Recents menu:

1. Select the Phone icon on the infotainment app screen or on the application tray near the left of the display.
2. Select Recents.
3. There are two methods for placing a call:
   - Select the name or phone number to call.

NOT FOR RESALE

- Select the contact card to the right of the name or phone number. Within the contact card select the phone number to call.

Making a Call Using the Keypad

To make a call by dialing the numbers:

1. Select the Phone icon on the infotainment app screen or on the application tray near the left of the display.
2. Select Keypad and enter a phone number.
3. There are two methods for placing a call:
   - Select the phone icon in the keypad.
   - Select the contact name to the right of the keypad. If the phone number is stored with a contact, the contact will appear as the number is typed into the keypad.

Searching Contacts Using the Keypad

To search for contacts using the keypad:

1. Select the Phone icon on the infotainment app screen.
2. Select Keypad and enter partial phone numbers or contact names using the digits on the keypad to search. Results appear on the right side of the display. Select one to place a call.

Accepting or Declining a Call

When an incoming call is received, the infotainment system mutes and a ring tone is heard in the vehicle.

Accepting a Call

To Accept a call, select Answer on the infotainment display.

Declining a Call

To decline a call, press on the steering wheel controls or Decline on the infotainment display.

Call Waiting, Merging, and Conferencing

Call waiting, merging, and conferencing must be supported on the Bluetooth mobile device and enabled by the wireless service carrier to work.

When an incoming call is received during an active call, press on the steering wheel controls or "Answer" from the infotainment display. This will answer the incoming call and place the active call on hold.

To switch between the calls, select the Switch icon on the infotainment display.

To merge the calls, select "Merge" within the Active Call Screen on the infotainment display. This creates a three-way conference. If another call is received during a three-way conference, it can be answered, but it will place the conference on hold.

Making a Call Using Favorites

1. Select the Phone icon on the infotainment app screen or on the application tray near the left of the display.
2. Select Favorites.
   - The vehicle can sync up to five favorites from the phone.
   - The vehicle can also store up to five additional contacts as vehicle favorites. These will be stored for as long as the phone is paired and connected. If the phone is unpaired/ forgotten by the vehicle, the vehicle favorites will be deleted.

To add a favorite for the vehicle:

1. Select "Add Favorite".
2. Select a contact from the Phone Book.

NOT FOR RESALE

3. Select the star icon next to the phone number to add as a favorite.

Ending a Call

Press on the steering wheel controls or select on the infotainment display, next to a call, to end only that call.

Dual Tone Multi-Frequency Tones

The in-vehicle Bluetooth system allows you to enter numbers using the Keypad during a call which is useful for navigation menu-driven phone systems.

Apple CarPlay and Android Auto

If equipped, Apple CarPlay and/or Android Auto capability may be available through a compatible smartphone. If the phone is paired and projections are available, Apple CarPlay and/or Android Auto icons will become illuminated on the infotainment app screen.

To use Apple CarPlay and/or Android Auto:

For Wired Phone Projection

1. For Android 9 smartphones and older, download the Android Auto app to your phone from the Google Play Store. There is no app required for Apple CarPlay.
2. Connect your Android phone or Apple iPhone by using the factory-provided phone USB cable and plugging into a USB data port. For best performance, it is highly recommended to use the device's factory-provided USB cable, which should be replaced after significant wear to maintain connection quality. Aftermarket or third-party cables may not work.
3. When the phone is first connected, to activate Apple CarPlay or Android Auto, accept the terms and conditions on both the infotainment system and the phone.
4. Follow the instructions on the phone.

The Android Auto and Apple CarPlay icons on the infotainment app screen will illuminate. Android Auto and/or Apple CarPlay may automatically launch the next time the USB is connected. If not, select the Android Auto or Apple CarPlay icon on the infotainment app screen to launch.

Press the home button on the center stack to return to the infotainment home screen.

For Wireless Phone Projection

Verify your phone is wireless compatible by visiting the Android Auto or Apple CarPlay support page.

1. For Android 9 smartphones and older, download the Android Auto app to your phone from the phones Google Play Store. There is no app required for Apple CarPlay.
2. For first time connection, make sure Bluetooth and Wi-Fi are turned on in phone settings. To connect the phone over Bluetooth, see *Bluetooth (Overview)* ⇨ *165* *Bluetooth (Pairing and Using a Phone)* ⇨ *166*.
3. When the phone is first connected, to activate Apple CarPlay or Android Auto, agree to the terms and conditions on both the infotainment system and the phone.
4. Follow the instructions on the phone.

The Android Auto and Apple CarPlay icons on the infotainment app screen will illuminate. Android Auto and/or Apple CarPlay may automatically launch upon wireless

NOT FOR RESALE

connection. If not, select the Android Auto or Apple CarPlay icon on the infotainment app screen to launch.

Wireless CarPlay and/or Wireless Android Auto may experience occasional service disruption due to outside Wi-Fi interference.

To disconnect the phones wireless projection for that paired device:

1. Select the Settings from the infotainment app screen.
2. Select Connections.
3. Select Phones or Devices.
4. Select the Bluetooth icon or Options on the phone card.
5. Select Connection Type from the list and choose Bluetooth Calling and Media.

Press the home button on the center stack to return to the infotainment home screen.

Features are subject to change. For further information on how to set up Android Auto and Apple CarPlay in the vehicle, visit your brand website. See *Online Account and Customer Support* ⇨ *428* for details.

CarPlay will not support Fast Connect on iPhones with iOS version 13 or older.

Android Auto is provided by Google and is subject to Google's terms and privacy policy. Apple CarPlay is provided by Apple and is subject to Apple's terms and privacy policy. Data plan rates apply. For Android Auto support and to see if your phone is compatible, see www.android.com/auto/compatability. For Apple CarPlay support and to see if your phone is compatible, see www.apple.com/ios/carplay/. Apple or Google may change or suspend availability at any time. Google, Android, Android Auto, Google Maps, and other marks are trademarks of Google LLC. Apple CarPlay is a trademark of Apple Inc.

Press the home button on the center stack to exit Android Auto or Apple CarPlay. To enter back into Android Auto or Apple CarPlay, press and hold the home button on the center stack.

If applicable, Android Auto and/or Apple CarPlay may be disabled from the infotainment system. To do this, from the app screen select Settings > Connections. Scroll down the list to find Android Auto or Apple CarPlay. Use the On/Off toggle to turn Android Auto or Apple CarPlay on or off for the entire system.

Settings

To access the Settings menus:

1. Touch Settings on the infotainment apps screen.
2. Touch the desired feature setting.
3. Touch the options on the infotainment display to change a setting.
4. Touch < to go back.

The Settings menu may contain the following:

Connections

The menu may contain the following:

Devices

Allows connecting to a different cell phone or mobile device source, disconnecting a cell phone or media device, or deleting a cell phone or media device.

Apple CarPlay

Allows interacting directly with a mobile device on the infotainment display. See *Apple CarPlay and Android Auto* ⇨ *170*.

NOT FOR RESALE

Android Auto

Allows interacting directly with a mobile device on the infotainment display. See *Apple CarPlay and Android Auto* ⇨ *170*.

Wi-Fi Networks

Shows connected and available Wi-Fi networks.

Wi-Fi Hotspot

Allows adjustment of different Wi-Fi features.

Vehicle-to-Phone Sharing

Allows GM apps to use vehicle data on the phones shown in the list.

Trusted Device

Allows for setting a phone as your trusted device to establish a secure communication channel between your phone and vehicle that enables convenient features like instant profile unlocking and account sign in. When your trusted device is nearby, the system automatically recognizes it through a unique Bluetooth connection. Requires MyBrand app.

Vehicle

The menu may contain the following:

Audio Settings

Allows adjustment of different audio settings.

Doors and Locks

Allows adjustment of different door lock settings.

Drive Mode Customization

See *Driver Mode Control* ⇨ *234*.

Teen Driver

See *Teen Driver* ⇨ *174*.

Rear Seat Reminder

Allows for an audible alert and a message when the rear door has been opened before or during operation of the vehicle.

Buckle to Drive

See *Buckle To Drive* ⇨ *57*.

Super Cruise Lane Change

See *Super Cruise* ⇨ *263*.

Turn Signal Activated View

Allows adjustment of Turn Signal Activated View settings.

Trailer Length Indicator

Allows adjustment of Trailer Length Indicator.

Climate and Air Quality

Allows adjustment of different climate settings.

Speed Assist

Allows adjustment of different speed assist settings.

Collision/Detection Systems

Allows adjustment of different driver assistance system settings.

Comfort and Convenience

Allows adjustment of different comfort and convenience settings.

Driver Attention Assist

Allows adjustment of different sensitivity levels for drowsiness attention settings.

Lighting

Allows adjustment of different lighting settings.

NOT FOR RESALE

Remote Lock, Unlock, and Start

Allows adjustment of different remote lock settings.

Seating Position

Allows adjustment of different seating position settings.

Transport Mode

Allows adjustment of transport mode settings.

Trailering

Allows adjustment of different trailering settings.

Ride Height

Allows adjustment of different ride height settings.

Power Assist Steps

Allows adjustment of different running board settings.

Suspension

Allows adjustment of different suspension settings.

Notifications

Shows a list of installed apps and the permissions used.

Apps

Allows adjustment of the infotainment apps settings.

Date/Time

Allows setting of the clock.

Display

Allows adjustment of the infotainment display.

Sounds

Allows adjustment of the infotainment system sounds.

Profiles and Accounts

Modifies the infotainment system's profiles and provides access to the accounts assigned to the currently active profile. Profiles can be setup and/or modified as Admin profiles or Guest profiles.

Privacy

Allows adjustment of the infotainment privacy settings.

Accessibility

Shows the accessibility information on the infotainment system.

Assistant and Voice

Shows the assistant and voice settings.

Security

Allows adjustment of the infotainment security settings.

System

The menu may contain the following:

Language

This will set the display language used on the infotainment display.

Keyboard and Speech

Touch to change keyboard and speech settings.

Units

Touch to change units settings.

NOT FOR RESALE

Reset Options

Touch to change reset settings. The submenu "Erase Infotainment Data" is only accessible if the profile logged into the vehicle is configured as an "Admin."

RTT Mode

Touch to turn off or on.

Storage

Touch to view storage settings.

About

Touch to view the infotainment system software information.

Legal Information

Touch to view legal and license information.

Updates

See *How Your Vehicle is Updated* ⇨ *444*.

Google

Allows adjustment of the Google settings.

Teen Driver

If equipped, this allows multiple keys to be registered for beginner drivers to encourage safe driving habits. When the vehicle is started with a Teen Driver key, it will automatically activate certain safety systems, allow setting of some features, and limit the use of others. The Report Card will record vehicle data about driving behavior that can be viewed later. When the vehicle is started with a registered key, the Driver Information Center displays a message that Teen Driver is active.

To access:

1. From the infotainment apps screen, select Settings > Vehicle > Teen Driver.
2. Create a PIN by choosing a four-digit PIN. Re-enter the PIN to confirm. To change the PIN, touch Change PIN.

The PIN is required to:

- Set up/add or remove keys.
- Change Teen Driver settings.
- Change or clear the Teen Driver PIN.
- Access or delete Report Card data.

Set up/add keys to activate Teen Driver and assign restrictions to the key:

Any vehicle key can be registered, up to a maximum of eight keys. Label the key to tell it apart from the other keys.

For a pushbutton start system:

1. Start the vehicle.
2. For automatic transmissions, the vehicle must be in P (Park). For manual transmissions, the vehicle must be stopped with the parking brake set.
3. From the infotainment apps screen, select Settings > Vehicle > Teen Driver.
4. Enter the PIN.
5. Place the remote key you wish to register in the transmitter pocket. See *Remote Key Operation* ⇨ *14* for transmitter pocket location. The key does not need to be the one that started the vehicle.
6. From the Teen Driver menu, touch Setup Keys or Add/Remove Teen Driver Keys.

NOT FOR RESALE

- If the remote key has not previously been registered, the option to add the key displays. Touch Add and a confirmation message displays. Teen Driver restrictions will be applied whenever this remote key is used to operate the vehicle.
- If the remote key has already been registered, the option to remove the key displays. If Remove is touched, the remote key is no longer registered. A confirmation message displays, and Teen Driver restrictions will not be applied if this remote key is used to operate the vehicle.

In vehicles with a pushbutton start system, if a Teen Driver and a non-Teen Driver key are both present at start up, the vehicle will recognize the non-Teen Driver key to start the vehicle. The Teen Driver settings will not be active.

For a keyed ignition system:

1. Start the vehicle.
2. For automatic transmissions, the vehicle must be in P (Park). For manual transmissions, the vehicle must be stopped with the parking brake set.
3. From the infotainment apps screen, select Settings > Vehicle > Teen Driver.
4. Enter the PIN.
5. Touch Setup Keys or Add/Remove Teen Driver Keys. The system displays instructions for registering or unregistering a key. A confirmation message displays.

Manage Settings or Teen Driver Settings

Depending on the options of your vehicle, the following menu items may be displayed:

Buckle to Drive : When turned on, Buckle to Drive prevents the driver from shifting out of P (Park) for a period of time after the brake pedal is pressed if the driver, or on some vehicles the detected passenger, has not buckled their seat belt. On some vehicles, Buckle to Drive is always on when Teen Driver is active and is not configurable.

Audio Volume Limit : Allows a maximum audio volume to be set. Turn the audio volume limit on or off. Use the arrows to choose the maximum allowable level for the audio volume. On some infotainment systems, touch Set Audio Volume Limit to choose the maximum allowable audio volume level.

Set Audio Volume Limit : Use the arrows to choose the maximum allowable level for the audio volume.

Teen Driver Speed Limiter : Limits the maximum speed of the vehicle. When the speed limiter is turned on and the vehicle is started with a Teen Driver key, the Driver Information Center displays a message that the top speed is limited.

On certain vehicles, when the Speed Limiter is turned on, the vehicle's maximum acceleration will be limited. The Driver Information Center will display a message that the acceleration is limited.

Teen Driver Speed Warning : Displays a warning in the Driver Information Center when exceeding a selectable speed. Turn the speed warning on or off and choose the desired speed warning level. The speed warning does not limit the speed of the vehicle. On some infotainment systems, touch Set Teen Driver Speed Warning to set the warning speed.

Set Teen Driver Speed Warning : Choose the desired speed warning level. The speed warning does not limit the speed of the vehicle.

NOT FOR RESALE

When Teen Driver is Active:

- If equipped, the radio will mute when the driver seat belt, and in some vehicles the front passenger seat belt, is not buckled. The audio from any device paired to the vehicle will also be muted.
- An object placed on the front passenger seat, such as a briefcase, handbag, grocery bag, laptop, or other electronic device, could cause the passenger sensing system to falsely sense an unbuckled front passenger and mute the radio. If this happens, remove the object from the seat.
- Some safety systems, such as Automatic Emergency Braking, if equipped, cannot be turned off.
- The gap setting for Adaptive Cruise Control and alert timing for Forward Collision Alert, if equipped, cannot be changed.
- When trying to change a safety feature that is not configurable in Teen Driver, the feature may be grayed out or removed from the infotainment menu, or the Driver Information Center will display a message indicating that Teen Driver is active and the action is not available.
- Super Cruise, if equipped, is not available.
- Enhanced Low Fuel Warning (if equipped) – When the vehicle is low on fuel, the low fuel light on the instrument cluster flashes and the Driver Information Center low fuel warning cannot be dismissed.
- Do not tow a trailer if equipped with Automatic Emergency Braking.
- Daytime Running Lights or headlights are always on when the vehicle is shifted out of P (Park). Even if the headlight control is set to off or ≥00≤, the Automatic Headlight System is engaged and ensures that either the Daytime Running Lights or headlights come on based on outside light level.

Report Card

The vehicle owner must secure the driver's consent to record certain vehicle data when the vehicle is driven with a registered Teen Driver key. There is one Report Card per vehicle. Data is only recorded when a registered Teen Driver key is used to operate the vehicle.

The Report Card data is collected from the time Teen Driver is activated or the last time the Report Card was reset. The following items may be recorded:

- Distance Driven – the total distance driven.
- Maximum Speed – the maximum vehicle speed detected.
- Overspeed Warnings – the number of times the speed warning setting was exceeded.
- Wide Open Throttle – the number of times the accelerator pedal was pressed nearly all the way down.
- Forward Collision Alerts (if equipped) – the number of times the driver was notified when approaching a vehicle ahead too quickly and at potential risk for a crash.
- Forward Automatic Braking, also called Automatic Emergency Braking (if equipped) – the number of times the vehicle detected that a forward collision was imminent and applied the brakes.
- Reverse Automatic Braking (if equipped) – the number of times the vehicle detected that a rearward collision was imminent and applied the brakes.
- Traction Control – the number of times the Traction Control System activated to reduce wheel spin or loss of traction.
- Stability Control – the number of events which required the use of electronic stability control.

NOT FOR RESALE

- Antilock Braking System Active – the number of Antilock Brake System (ABS) activations.
- Tailgating Alerts (if equipped) – the number of times the driver was alerted for following a vehicle ahead too closely.

Report Card Data

Cumulative Data is saved for all trips until the Report Card is reset or until the maximum count is exceeded. If the maximum count is exceeded for a Report Card line item, that item will no longer be updated in the Report Card until it is reset. Each item will report a maximum of 1,000 counts. The distance driven will report a maximum of 64,374 km (40,000 mi).

To delete Report Card data, do one of the following:

- From the Report Card display, touch Reset.
- Touch Clear PIN and All Teen Driver Keys from the Teen Driver menu. This will also unregister any Teen Driver keys and delete the PIN.

Forgotten PIN

See your dealer to reset the PIN.

Trademarks and License Agreements

Made for iPhone

"Made for iPhone" means that an electronic accessory has been designed to connect specifically to iPhone, and has been certified by the developer to meet Apple performance standards. Apple is not responsible for the operation of this device or its compliance with safety and regulatory standards. Please note that the use of this accessory with iPhone may affect wireless performance. iPhone is a trademark of Apple Inc., registered in the U.S. and other countries.

Android

Android is a trademark of Google LLC.

SiriusXM

Trial length and service availability may vary by model, model year, or trim. Service will automatically stop at the end of your trial subscription period unless you decide to continue service. If you do not wish to enjoy your trial, you can cancel by calling the number below. All SiriusXM services require a subscription, each sold separately by SiriusXM after the trial period. Service subject to the applicable SiriusXM Customer Agreement and Privacy Policy, visit www.siriusxm.com (USA) or www.siriusxm.ca (Canada) to see complete terms and how to cancel which includes calling 1-866-635-2349 (USA) or 1-888-539-7474 (Canada). Some services and features are subject to device capabilities and location availability. Content varies by SiriusXM subscription package. All fees, content, and features are subject to change.

NOT FOR RESALE

SiriusXM with 360L: Some features, including streaming content and listening recommendations, require an active OnStar Connected Access plan and may vary by vehicle model. Content varies by SiriusXM subscription plan. GM connected vehicle services vary by vehicle model and require active service plan, working electrical system, cell reception, and GPS signal. See onstar.com for details and limitations.

SiriusXM, Pandora, Stitcher, and all related logos are trademarks of SiriusXM Radio Inc. and its respective subsidiaries.

SiriusXM satellite service is only available in the 48 contiguous United States (and Puerto Rico with limited availability) and Canada.

In Canada: Some deterioration of service may occur in extreme northern latitudes. This is beyond the control of SiriusXM.

Explicit Language Notice: Channels with frequent explicit language are indicated with an "XL" after the channel name. Family-friendly packages are available by contacting SiriusXM:

- USA Customers — See www.siriusxm.com or call 1-888-601-6296.
- Canada Customers — See www.siriusxm.ca or call 1-877-438-9677.

It is prohibited to copy, decompile, disassemble, reverse engineer, hack, manipulate, or otherwise make available any technology or software incorporated in receivers compatible with the SiriusXM Satellite Radio System or that support the SiriusXM website, the Online Service, or any of its content.

General Requirements:

1. A License Agreement from SiriusXM is required for any product that incorporates SiriusXM Technology and/or for use of any of the SiriusXM marks to be manufactured, distributed, or marketed in the SiriusXM Service Area.
2. For products to be distributed, marketed, and/or sold in Canada, a separate agreement is required with SiriusXM Canada Inc.



TouchSense Technology and TouchSense System 1000 Series Licensed from Immersion Corporation. TouchSense System 1000 is protected under one or more of the U.S. Patents at the following address www.immersion.com/patent-marking.html and other patents pending.

Bose

Bose AudioPilot and Bose Centerpoint surround are registered trademarks of Bose Corporation in the U.S. and other countries.

Bluetooth

The Bluetooth word mark and logos are owned by the Bluetooth SIG, Inc. and any use of such marks by General Motors is under license. Other trademarks and trade names are those of their respective owners.

Java

Java is a registered trademark of Oracle and/or its affiliates.

MPEG4–AVC (H.264)

THIS PRODUCT IS LICENSED UNDER THE AVC PATENT PORTFOLIO LICENSE FOR THE PERSONAL AND NON-COMMERCIAL USE OF A CONSUMER TO (i) ENCODE VIDEO IN

NOT FOR RESALE

COMPLIANCE WITH THE AVC STANDARD ("AVC VIDEO") AND/OR (ii) DECODE AVC VIDEO THAT WAS ENCODED BY A CONSUMER ENGAGED IN A PERSONAL AND NON-COMMERCIAL ACTIVITY AND/OR WAS OBTAINED FROM A VIDEO PROVIDER LICENSED TO PROVIDE AVC VIDEO. NO LICENSE IS GRANTED OR SHALL BE IMPLIED FOR ANY OTHER USE. ADDITIONAL INFORMATION MAY BE OBTAINED FROM MPEG LA, L.L.C. SEE HTTPS://WWW.MPEGLA.COM.

VC-1

THIS PRODUCT IS LICENSED UNDER THE VC-1 PATENT PORTFOLIO LICENSE FOR THE PERSONAL AND NON-COMMERCIAL USE OF A CONSUMER TO (i) ENCODE VIDEO IN COMPLIANCE WITH THE VC-1 STANDARD ("VC-1 VIDEO") AND/OR (ii) DECODE VC-1 VIDEO THAT WAS ENCODED BY A CONSUMER ENGAGED IN A PERSONAL AND NON-COMMERCIAL ACTIVITY AND/OR WAS OBTAINED FROM A VIDEO PROVIDER LICENSED TO PROVIDE VC-1 VIDEO. NO LICENSE IS GRANTED OR SHALL BE IMPLIED FOR ANY OTHER USE. ADDITIONAL INFORMATION MAY BE OBTAINED FROM MPEG LA, L.L.C. SEE HTTPS://WWW.MPEGLA.COM.

MPEG4–Visual

USE OF THIS PRODUCT IN ANY MANNER THAT COMPLIES WITH THE MPEG-4 VISUAL STANDARD IS PROHIBITED, EXCEPT FOR USE BY A CONSUMER ENGAGING IN PERSONAL AND NON-COMMERCIAL ACTIVITIES.

MP3

MPEG Layer-3 audio coding technology licensed from Fraunhofer IIS and Thomson.

WMV/WMA

This product includes technology owned by Microsoft Corporation and under a license from Microsoft Licensing, GP. Use or distribution of such technology outside of this product is prohibited without a license from Microsoft Corporation and/or Microsoft Licensing, GP as applicable.

NOT FOR RESALE

Climate Controls

Climate Control Systems
Automatic Climate Control System 180
Dual Automatic Climate Control System 183
Air Vents
Air Vents 185
Maintenance
Passenger Compartment Air Filter 185
Service 186

Climate Control Systems

Automatic Climate Control System

The heating, cooling, and ventilation in the vehicle can be controlled with this system.

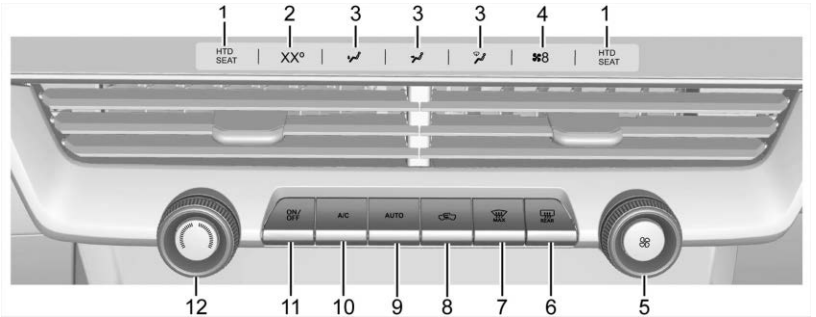

1. Heated Seat Control (If Equipped)
2. Temperature Settings
3. Air Delivery Mode Controls
4. Fan Setting
5. Fan Control
6. Rear Window Defogger (If Equipped)
7. MAX Defrost
8. Recirculation
9. AUTO (Automatic Operation)
10. A/C (Air Conditioning)
11. ON/OFF
12. Temperature Control

Automatic Operation

The system automatically controls the fan speed, air delivery, air conditioning, and recirculation in order to heat or cool the vehicle to the desired temperature.

NOT FOR RESALE

When AUTO is lit, all four functions operate automatically. Each function can also be manually set and the selected setting is displayed. Functions not manually set will continue to be automatically controlled, even if the AUTO indicator is not lit.

For automatic operation:

1. Press AUTO.
2. Set the temperature. Allow the system time to stabilize. Adjust the temperature as needed for best comfort.

To improve fuel efficiency and to cool the vehicle faster, recirculation may be automatically selected in warm weather.

The recirculation light will not come on when automatically controlled. See under "Manual Operation" for more details.

: Turn the knob clockwise or counterclockwise to increase or decrease the fan speed. On some models, press the fan control to turn the climate control system on or off.

TEMP: Turn clockwise or counterclockwise to increase or decrease the temperature inside the vehicle.

Air Delivery Mode Controls: Press , , or to change the direction of the airflow. Any combination of the three controls can be selected. An indicator light comes on in the selected mode button.

To change the current mode, select one or more of the following. An indicator light will illuminate:

: Air is directed to the windshield, outboard a/c outlets, and side window outlets.

: Air is directed to the a/c outlets.

: Air is directed to the floor outlets, with some air directed to the windshield, outboard a/c outlets, and side window outlets.

MAX: Air is directed to the windshield and the fan runs at a higher speed if not already above a medium fan speed. This mode overrides the previous mode selected and clears fog or frost from the windshield more quickly. When the control is pressed again, the system returns to the previous mode setting and fan speed.

For best results, clear all snow and ice from the windshield before defrosting.

: Press to turn on recirculation. An indicator light comes on. Air is recirculated to quickly cool the inside of the vehicle. It can also be used to help reduce outside air and odors that enter the vehicle.

Avoid using recirculation for long periods of time in cold or damp conditions. Using recirculation in cold or damp conditions can result in window fogging.

A/C: Press to turn the air conditioning on or off. An indicator light comes on to show that the air conditioning is enabled. If the fan is turned off, the air conditioner will not run. The A/C light will stay on even if the outside temperatures are below freezing.

Rear Window Defogger

Caution
Using a razor blade or sharp object to clear the inside rear window can damage the rear window defogger. Repairs would not be covered by the vehicle warranty. Do not clear the inside rear window with sharp objects.

NOT FOR RESALE

REAR: If equipped, press to turn the rear window defogger on or off. An indicator light on the button comes on to show that the rear window defogger is on.

The rear window defogger only works when the engine is running. The defogger turns off if the vehicle is turned off or to accessory mode.

If equipped with heated outside mirrors, press to turn them on or off. See *Heated Mirrors* ⇨ *37*.

Sensors

The solar sensor, on top of the instrument panel near the windshield, monitors the solar heat. See *Instrument Panel Overview* ⇨ *5* for the location of the sensor.

The climate control system uses the sensor information to adjust the temperature, fan speed, recirculation, and air delivery mode for best comfort.

Do not cover the sensor; otherwise the automatic climate control system may not work properly.

Afterblow Feature

If equipped, under certain conditions, the fan may stay on or may turn on and off several times after you turn off and lock the vehicle. This is normal.

NOT FOR RESALE

Dual Automatic Climate Control System

The heating, cooling, and ventilation in the vehicle can be controlled with this system.

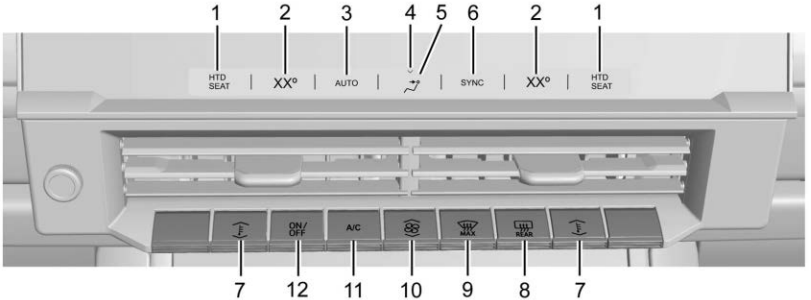

1. Heated Seat Control (If Equipped)
2. Driver and Passenger Temperature Displays
3. AUTO (Automatic Operation)
4. Climate Settings Screen
5. Air Delivery Mode Controls
6. SYNC (Synchronized Temperature)
7. Driver and Passenger Temperature Controls
8. Rear Window Defogger (If Equipped)
9. MAX Defrost
10. Fan Control
11. A/C (Air Conditioning)
12. Power Button

Automatic Operation

The system automatically controls the fan speed, air delivery, air conditioning, and recirculation in order to heat or cool the vehicle to the desired temperature.

When AUTO is lit, all four functions operate automatically. Each function can also be manually set and the selected setting is displayed. Functions not manually set will continue to be automatically controlled, even if the AUTO indicator is not lit.

For automatic operation:

1. Press AUTO.
2. Set the temperature. Allow the system time to stabilize. Adjust the temperature as needed for best comfort.

To improve fuel efficiency and to cool the vehicle faster, recirculation may be automatically selected in warm weather.

The recirculation light will not come on when automatically controlled. See under "Manual Operation" for more details.

Manual Operation

Adjust the climate control settings with the following on-screen controls along the bottom edge of the infotainment screen or the buttons on the center stack. Additional settings can be accessed by selecting the Climate Settings Screen (4).

: Lift up or press down to increase or decrease the fan speed. The fan speed setting appears on the main display. Pressing either button cancels automatic fan control and the fan is controlled manually.

NOT FOR RESALE

Press AUTO to return to automatic operation.

Driver and Passenger Temperature Control: The temperature can be adjusted separately for the driver and passenger.

Lift up or press down to increase or decrease the driver or passenger temperature setting. The driver side or passenger side temperature display shows the temperature setting increasing or decreasing.

SYNC: Press to link the passenger temperature setting to the driver setting. The SYNC indicator light will turn on. When the passenger setting is adjusted, the SYNC indicator light will turn off.

Air Delivery Mode Control: Press , , or to change the direction of the airflow. Any combination of the three controls can be selected. An indicator light comes on in the selected mode button.

Changing the mode cancels the automatic operation and the system goes into manual mode. Press AUTO to return to automatic operation.

To change the current mode, select one or more of the following:

: Air is directed to the windshield, outboard A/C outlets, and side window outlets.

: Air is directed to the A/C outlets.

: Air is directed to the floor outlets, with some air directed to the windshield, outboard A/C outlets, and side window outlets.

MAX: Air is directed to the windshield and the fan runs at a higher speed if not already above a medium fan speed. This mode overrides the previous mode selected and clears fog or frost from the windshield more quickly. When the control is pressed again, the system returns to the previous mode setting and fan speed.

For best results, clear all snow and ice from the windshield before defrosting.

: Access the Climate Settings Screen then press to turn on recirculation. An indicator light comes on. Air is recirculated to quickly cool the inside of the vehicle. It can also be used to help reduce outside air and odors that enter the vehicle.

Avoid using recirculation for long periods of time in cold or damp conditions. Using recirculation in cold or damp conditions can result in window fogging.

A/C: Press to turn the air conditioning on or off. An indicator light comes on to show that the air conditioning is enabled. If the fan is turned off, the air conditioner will not run. The A/C light will stay on even if the outside temperatures are below freezing.

Rear Window Defogger

Caution
Using a razor blade or sharp object to clear the inside rear window can damage the rear window defogger. Repairs would not be covered by the vehicle warranty. Do not clear the inside rear window with sharp objects.

REAR: If equipped, press to turn the rear window defogger on or off. An indicator light on the button comes on to show that the rear window defogger is on.

NOT FOR RESALE

The rear window defogger only works when the engine is running. The defogger can be turned off by turning the vehicle off or to accessory mode.

If equipped with heated outside mirrors, press to turn them on or off. See *Heated Mirrors* ⇨ *37*.

Remote Start Climate Control Operation: If equipped with remote start, the climate control system may run when the vehicle is started remotely. If equipped with heated or ventilated seats or a heated steering wheel, these features may come on during a remote start. See *Remote Start* ⇨ *19*, *Heated and Ventilated Front Seats* ⇨ *54*, and *Heated Steering Wheel* ⇨ *106*.

Sensors

The solar sensor, on top of the instrument panel near the windshield, monitors the solar heat. See *Instrument Panel Overview* ⇨ *5* for the location of the sensor.

The climate control system uses the sensor information to adjust the temperature, fan speed, recirculation, and air delivery mode for best comfort.

Do not cover the sensor; otherwise the automatic climate control system may not work properly.

Afterblow Feature

If equipped, under certain conditions, the fan may stay on or may turn on and off several times after you turn off and lock the vehicle. This is normal.

Air Vents

Use the sliding knobs on the center and side air vents to change the direction of the airflow.

Air vents blow warm air on the side windows in cold weather. If Floor, Defog, or Defrost modes are selected, a small amount of air will come from the vents closest to the window.

To close the A/C vents, move the sliding knobs away from you.

Use only GM approved hood deflectors. Check with your dealer before adding equipment to the outside of the vehicle.

Operation Tips

- Clear away any ice, snow, or leaves from air inlets at the base of the windshield that could block airflow.
- Clear any snow off the hood to improve visibility and help decrease moisture drawn into the vehicle.
- Keep the path under the front seats clear of objects to help circulate the air inside of the vehicle more effectively.
- Do not attach any devices to the air vent vanes. Doing so restricts airflow and may cause damage to the air vents.

Maintenance

Passenger Compartment Air Filter

The filter reduces the dust, pollen, and other airborne irritants from outside air that is pulled into the vehicle.

NOT FOR RESALE

The filter should be replaced as part of routine scheduled maintenance. To replace the filter:



1. Open the lower glove box door completely.



2. Push the dampener arm to the left until it releases the glove box.

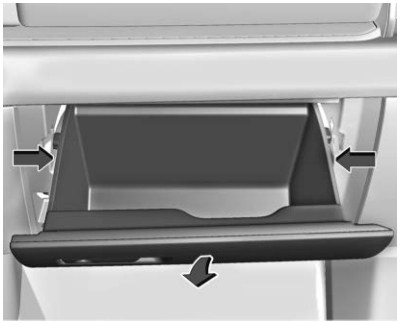

3. Press the sides of the glove box door inward and rotate the door downward to remove.



4. Pull lever on left side of the filter door and slide left, then remove the door. Remove the old filter.
5. Install the new air filter.
6. Reinstall the filter door.
7. Reverse the steps to reinstall the glove box.

See your dealer if additional assistance is needed.

Service

All vehicles have a label underhood that identifies the refrigerant used in the vehicle. The refrigerant system should only be serviced by trained and certified technicians. The

NOT FOR RESALE

air conditioning evaporator should never be repaired or replaced by one from a salvage vehicle. It should only be replaced by a new evaporator to ensure proper and safe operation.

During service, all refrigerants should be reclaimed with proper equipment. Venting refrigerants directly to the atmosphere is harmful to the environment and may also create unsafe conditions based on inhalation, combustion, frostbite, or other health-based concerns.

The air conditioning system requires periodic maintenance. See *Maintenance Schedule* ⇨ *412*.

NOT FOR RESALE

Driving and Operating

Driving Information
- Driving for Better Fuel Economy 189
- Distracted Driving 190
- Defensive Driving 190
- Impaired Driving 190
- Control of a Vehicle 191
- Braking 191
- Steering 191
- Off-Road Recovery 192
- Loss of Control 192
- Off-Road Driving 193
- Off-Road App 196
- Driving on Wet Roads 197
- Hill and Mountain Roads 198
- Winter Driving 199
- If the Vehicle Is Stuck 200
- Vehicle Load Limits 201
- Truck-Camper Loading Information 206

Starting and Operating
- New Vehicle Break-In 207
- Ignition Positions 208
- Starting the Engine (Gasoline) 209
- Starting the Engine (Diesel) 210
- Stop/Start System 211
- Engine Heater 213
- Retained Accessory Power (RAP) 214
- Parking over Things That Burn 214
- Active Fuel Management (Gasoline) 214
- Extended Parking (Gasoline) 214
- Extended Parking (Diesel) 215

Engine Exhaust
- Engine Exhaust 215
- Running the Vehicle While Parked 215

Diesel Particulate Filter
- Diesel Particulate Filter 216

Diesel Exhaust Fluid
- Diesel Exhaust Fluid 218

Automatic Transmission
- Automatic Transmission 222
- Manual Mode 225

Drive Systems
- Four-Wheel Drive 226

Brakes
- Electric Brake Boost 229
- Antilock Brake System (ABS) 229
- Electric Parking Brake 229
- Exhaust Brake (3.0L Diesel) 231
- Brake Assist 231
- Post-Collision Braking (Secondary Collision Mitigation Braking) 231
- Hill Start Assist (HSA) 231

Ride Control Systems
- Traction Control/Electronic Stability Control 232
- Hill Descent Control (HDC) 233
- Driver Mode Control 234
- Locking Rear Axle 238
- Locking Front Axle 239

Cruise Control
- Adaptive Cruise Control (Advanced) 240
- Hands-On Steering Assist (Lane Centering Assistance (Mexico)) 252
- Super Cruise 263

Advanced Driver Assistance Systems
- Advanced Driver Assistance Systems 276
- Assistance Systems for Parking or Backing 277
- Rear Vision Camera (RVC) 277
- Surround Vision System 278
- Park Assist 282
- Reverse Automatic Braking (RAB) 283
- Rear Pedestrian Alert 284
- Rear Cross Traffic Alert (RCTA) System 285
- Assistance Systems for Driving 286
- Forward Collision Alert (FCA) System 287
- Automatic Emergency Braking (AEB) 289
- Front Pedestrian Braking (FPB) System 292
- Lane Change Alert (LCA) 295
- Blind Zone Steering Assist (BZSA) 298

NOT FOR RESALE

Traffic Sign Assistant 298
Driver Attention Assist 300
Lane Keep Assist (LKA) 301
Surround Vision Recorder 303

Fuel
Top Tier Fuel (Gasoline) 303
Top Tier Fuel (Diesel) 304
Recommended Fuel (L4B 2.7L L4 and L76 5.7L V8 Gasoline Engines) 304
Recommended Fuel (L78 6.6L V8 Gasoline Engine) 304
Recommended Fuel (Diesel) 305
Prohibited Fuels (Gasoline) 306
Fuels in Foreign Countries (Gasoline) 307
Fuel Additives (Gasoline) 307
Fuel Additives (Diesel) 307
Biodiesel 307
Cold Weather Operation (Diesel) 308
Water in Fuel 308
Running Out of Fuel 311
Fuel Filter Replacement (Diesel) 311
Filling the Tank (Gasoline) 312
Filling the Tank (Diesel) 314
Filling a Portable Fuel Container 315

Trailer Towing
General Towing Information 316

Conversions and Add-Ons
Add-On Electrical Equipment 316
Auxiliary Switches 317
Adding a Snow Plow or Similar Equipment 317
Pickup Conversion to Chassis Cab 319

Driving Information

Driving for Better Fuel Economy

Driving habits can affect fuel mileage. Here are some driving tips to get the best fuel economy possible:

- Set the climate controls to the desired temperature after the engine is started, or turn them off when not required.
- Avoid fast starts and accelerate smoothly.
- Brake gradually and avoid abrupt stops.
- Avoid idling the engine for long periods of time.
- When road and weather conditions are appropriate, use cruise control.
- Always follow posted speed limits or drive more slowly when conditions require.
- Keep vehicle tires properly inflated.
- Combine several trips into a single trip.
- Replace the vehicle's tires with the same TPC Spec number molded into the tire's sidewall near the size.
- Follow recommended scheduled maintenance.

NOT FOR RESALE

Distracted Driving

⚠ Warning

Taking your eyes off the road too long or too often could cause a crash resulting in injury or death. Focus your attention on driving.

Distraction comes in many forms and can take your focus from driving. Exercise good judgment when engaging with vehicle functions. Limit activities that may divert attention away from the road. Many local governments have enacted laws regarding driver distraction. Become familiar with the local laws in your area.

To avoid distracted driving, keep your eyes on the road, keep your hands on the steering wheel, and focus your attention on driving.

- Do not use a phone in demanding driving situations. Use a hands-free method to place or receive necessary phone calls.
- Watch the road. Do not read, take notes, or look up information on phones or other electronic devices.
- Designate a front seat passenger, if possible, to handle potential distractions.
- Become familiar with vehicle features before driving, such as programming favorite radio stations and adjusting climate control and seat settings.
- Program all trip information into any navigation device prior to driving.
- Wait until parked to retrieve items that have fallen to the floor.
- Stop or park the vehicle to tend to children.
- Keep pets in an appropriate carrier or restraint.
- Avoid stressful conversations while driving, whether with a passenger or on a cell phone.

Refer to the infotainment section for more information on using that system and the navigation system, if equipped, including pairing and using a cell phone.

Defensive Driving

Defensive driving means to always expect the unexpected. The first step in driving defensively is to wear a seat belt. See *Seat Belts* ⇨ *56*.

- Assume that other road users (pedestrians, bicyclists, and other drivers) are going to be careless and make mistakes. Anticipate what they may do and be ready.
- Allow enough following distance between your vehicle and the vehicle in front of you.
- Focus on the task of driving.

Impaired Driving

⚠ Warning

Drinking alcohol or taking drugs and then driving is very dangerous. Your reflexes, perceptions, attentiveness, and judgment can be affected by even a small amount of alcohol or drugs. You can have a serious — or even fatal — collision if you drive after drinking or taking drugs.

Do not drive while under the influence of alcohol or drugs, or ride with a driver who has been drinking or is impaired by drugs. Find alternate transportation home; or if you are with a group, designate a driver who will remain sober.

NOT FOR RESALE

Death and injury associated with impaired driving is a global tragedy.

Control of a Vehicle

Braking, steering, and accelerating are important factors in helping to control a vehicle while driving.

Braking

Braking action involves perception time and reaction time. Deciding to push the brake pedal is perception time. Actually doing it is reaction time.

Average driver reaction time is about three-quarters of a second. In that time, a vehicle moving at 100 km/h (60 mph) travels 20 m (66 ft) and may not have enough time to stop in an emergency.

Tips for stopping safely include:

- Keep a safe following distance from the vehicle in front of you.
- Avoid needless heavy braking.
- Keep pace with traffic.

If a brake fault occurs, the brakes may lose power assist. Without power assist, the brake pedal will be harder to push, and it can take longer to stop the vehicle.

If the engine were to stall or stop while driving, the electric brake boost system maintains power assist for as long as the battery has sufficient voltage. Steer the vehicle out of the roadway and stop as soon as it is safe to do so. See *Electric Brake Boost* ⇨ *229*.

Steering

Caution
To avoid damage to the steering system, do not drive over curbs, parking barriers, or similar objects at speeds greater than 3 km/h (1 mph). Use care when driving over other objects such as lane dividers and speed bumps. Damage caused by misuse of the vehicle is not covered by the vehicle warranty.

Electric Power Steering

The vehicle has an electric power steering system, which reduces the effort needed to steer. It does not have power steering fluid. The system does not require regular maintenance.

If the vehicle experiences a system malfunction and loses power steering, it may require greater steering effort. Turning the steering wheel as far as it can go and holding it there with force for an extended period may also reduce power steering assist.

See your dealer if there is a problem with the electric power steering system.

Curve Tips

- Reduce your speed before entering a curve.
- Take and maintain a safe and controlled speed through curves.
- Wait until the vehicle is out of the curve before gently accelerating into the straightaway.

Steering in Emergencies

- In some situations, steering around a problem may be more effective than braking.

NOT FOR RESALE

- You can hold both sides of the steering wheel to turn 180 degrees without removing a hand.
- The Antilock Brake System (ABS) allows steering while braking.

Off-Road Recovery

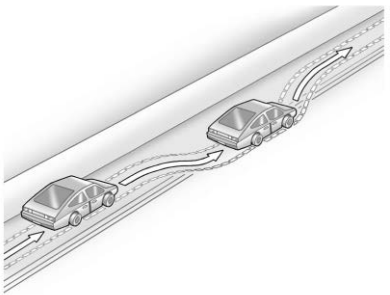

The vehicle's right wheels can drop off the edge of a road onto the shoulder while driving. Follow these tips:

1. Ease off the accelerator and then, if there is nothing in the way, steer the vehicle so that it straddles the edge of the pavement.
2. Turn the steering wheel about one-eighth of a turn, until the right front tire contacts the pavement edge.
3. Turn the steering wheel to go straight down the roadway.

Loss of Control

Skidding

There are three types of skids that correspond to the vehicle's three control systems:

Braking Skid: Wheels are not rolling.

Steering or Cornering Skid : Too much speed or steering in a curve causes tires to slip and lose cornering force.

Acceleration Skid : Too much throttle causes the driving wheels to spin.

Antilock brakes help to avoid only the braking skid.

Defensive drivers avoid most skids by taking reasonable care suited to existing conditions, and by not exceeding those conditions. But skids are always possible.

If the vehicle starts to skid, follow these suggestions:

- Ease your foot off the accelerator pedal and steer the way you want the vehicle to go. The vehicle may straighten out, but if it skids again from oversteer, be ready to correct another skid if it occurs.
- Slow down and adjust your driving according to weather conditions. Stopping distance may be longer and vehicle control may be affected when traction is reduced by water, snow, ice, gravel, or other material on the road. Learn to recognize warning clues — such as enough water, ice, or packed snow on the road to make a mirrored surface — and slow down when you have any doubt.
- Try to avoid sudden steering, acceleration, or braking, including reducing vehicle speed by shifting to a lower gear. Any sudden changes could cause the tires to slide.

NOT FOR RESALE

Off-Road Driving

⚠ Warning

Off-roading features are intended for use by experienced and qualified drivers. Uneven terrain and rough surfaces combined with improper driver inputs for the conditions may result in bouncing, quick changes in direction or loss of control of the vehicle, particularly when driving at higher speeds. You or others could be injured or killed. Always drive safely and exercise appropriate caution for the conditions. Always wear your seat belt.

Four-wheel-drive vehicles can be used for off-road driving. Vehicles without four-wheel drive and vehicles not equipped with All Terrain or On-Off Road tires must not be driven off-road except on a level, solid surface. For contact information about the original equipment tires, see the warranty manual.

One of the best ways for successful off-road driving is to control the vehicle speed.

Before Driving Off-Road

- Have all necessary maintenance and service work completed.
- Fuel the vehicle, fill fluid levels, and check inflation pressure in all tires, including the spare, if equipped.
- Read all the information about four-wheel-drive vehicles in this manual. See *Four-Wheel Drive* ⇨ *226*.
- Remove any underbody air deflector, if equipped. Re-attach the air deflector after off-road driving.
- Know the local laws that apply to off-road driving.

Loading the Vehicle for Off-Road Driving

⚠ Warning

- Unsecured cargo on the load floor can be tossed about when driving over rough terrain. You or your passengers can be struck by flying objects. Secure the cargo properly.

(Continued)

Warning (Continued)

- Keep cargo in the cargo area as far forward and as low as possible. The heaviest things should be on the floor, forward of the rear axle.
- Heavy loads on the roof raise the vehicle's center of gravity, making it more likely to roll over. You can be seriously or fatally injured if the vehicle rolls over. Put heavy loads inside the cargo area, not on the roof.

For more information about loading the vehicle, see *Vehicle Load Limits* ⇨ *201* and *Tires* ⇨ *364*.

Environmental Concerns

- Always use established trails, roads, and areas that have been set aside for public off-road recreational driving and obey all posted regulations.
- Do not damage shrubs, flowers, trees, or grasses or disturb wildlife.
- Do not park over things that burn. See *Parking over Things That Burn* ⇨ *214*.

NOT FOR RESALE

Driving on Hills

Warning

Many hills are simply too steep for any vehicle. Driving up hills can cause the vehicle to stall. Driving down hills can cause loss of control. Driving across hills can cause a rollover. You could be injured or killed. Do not drive on steep hills.

Warning

Driving to the top of a hill at high speed can cause a crash. There could be a drop-off, embankment, cliff, or even another vehicle. You could be seriously injured or killed. As you near the top of a hill, slow down and stay alert.

Driving safely on hills requires good judgment and an understanding of what the vehicle can and cannot do.

Before driving on a hill, assess the steepness, traction, and obstructions. If the terrain ahead cannot be seen, get out of the vehicle and walk the hill before driving further.

Techniques for Driving on Inclines

- Use a low gear and keep a firm grip on the steering wheel.
- Maintain a slow speed.
- When possible, drive straight up or down the hill.
- Slow down when approaching the top of the hill.
- Use headlights even during the day to make the vehicle more visible.
- Avoid turns that take the vehicle across the incline of the hill. Driving across an incline puts more weight on the downhill wheels, which could cause a downhill slide or a rollover.
- Loose gravel, muddy spots, or even wet grass can cause the tires to slip sideways, downhill. If the vehicle slips sideways, it can hit something and potentially roll over.
- Hidden obstacles can make the steepness of the incline more severe. If a rock is driven across with the uphill wheels, or if the downhill wheels drop into a rut or depression, the vehicle can tilt even more.
- If an incline must be driven across, and the vehicle starts to slide, turn downhill. This should help straighten out the vehicle and prevent side-slipping.
- Never go downhill forward or backward with either the transmission or transfer case in N (Neutral). The brakes could overheat and you could lose control.
- When driving downhill, keep the vehicle headed straight down. Use a low gear because the engine will work with the brakes to slow the vehicle and help keep the vehicle under control. Use Four-Wheel Drive Low (4 ↓) to maintain speed down a steep grade instead of using Hill Descent Control, if equipped.

Braking and Shifting Gears

Warning

If the vehicle has the two-speed automatic transfer case, shifting the transfer case to N (Neutral) can cause your vehicle to roll even if the transmission is in P (Park). This is because the N (Neutral) position on the

(Continued)

NOT FOR RESALE

Warning (Continued)

transfer case overrides the transmission. You or someone else could be injured. If leaving the vehicle, set the parking brake and shift the transmission to P (Park). Shift the transfer case to any position but N (Neutral).

⚠ Warning

Heavy braking when going down a hill can cause your brakes to overheat and fade. This could cause loss of control and you or others could be injured or killed. Apply the brakes lightly when descending a hill and use a low gear to keep vehicle speed under control.

If a brake fade condition is detected, a Driver Information Center warning message is displayed. Adjust brake pedal use and shift to a lower transmission gear to reduce braking.

If the brakes continue to fade to a severe condition, additional Driver Information Center messages are displayed. The brake system warning light will illuminate, and the vehicle speed may be limited. See *Brake System Warning Light* ➪ *122*.

If the Vehicle Stalls

⚠ Warning

Getting out of the vehicle on the downhill side when stopped across an incline is dangerous. If the vehicle rolls over, you could be crushed or killed. Always get out on the uphill side of the vehicle and stay well clear of the rollover path.

If the vehicle stalls on a hill, follow these steps to stay in control.

1. Apply the brakes to stop the vehicle, and then apply the parking brake.
2. Shift into P (Park) and then restart the engine.
3. If driving uphill when the vehicle stalls, shift to R (Reverse), release the parking brake, and back straight down. If driving downhill when the vehicle stalls, shift to a lower gear, release the parking brake, and drive straight down the hill.
   - Never try to turn the vehicle around. If the hill is steep enough to stall the vehicle, it is steep enough to cause it to roll over.
   - If you cannot make it up the hill, back straight down the hill.
   - Never back down a hill in N (Neutral) using only the brake. The vehicle can roll backward quickly and you could lose control.
4. If the vehicle cannot be restarted after stalling, set the parking brake, shift into P (Park), and turn the vehicle off.
   - Leave the vehicle and seek help.
   - Stay clear of the path the vehicle would take if it rolled downhill.

Driving in Mud, Sand, Snow, or Ice

⚠ Warning

Driving on frozen lakes, ponds, or rivers can be dangerous. Ice conditions vary greatly and the vehicle could fall through the ice; you and your passengers could drown. Drive your vehicle on safe surfaces only.

NOT FOR RESALE

Use a low gear when driving in mud — the deeper the mud, the lower the gear. Keep the vehicle moving to avoid getting stuck.

Traction changes when driving on sand. On loose sand, such as on beaches or sand dunes, the tires tend to sink into the sand. This affects steering, accelerating, and braking. Drive at a reduced speed and avoid sharp turns or abrupt maneuvers.

Traction is reduced on hard packed snow and ice and it is easy to lose control. Reduce vehicle speed when driving on hard packed snow and ice.

Driving in Water

⚠ Warning

Driving through rushing water can be dangerous. Deep water can sweep your vehicle downstream and you and your passengers could drown. If it is only shallow water, it can still wash away the ground from under your tires. Traction could be lost, and the vehicle could roll over. Do not drive through rushing water.

Caution

Do not drive through standing water if it is deep enough to cover the wheel hubs, axles, or exhaust pipe. Deep water can damage the axle and other vehicle parts.

If the standing water is not too deep, drive through it slowly. At faster speeds, water can get into the engine and cause it to stall. Stalling can occur if the exhaust pipe is under water.

Do not turn off the ignition when driving through water. If the exhaust pipe is under water, the engine will not start.

When going through water, the brakes get wet and it may take longer to stop. See *Driving on Wet Roads* ⇨ *197*.

After Off-Road Driving

Be sure to switch out of Off-Road mode or Terrain mode on your Driver Mode Control to return to normal driving. Driving in Off-Road mode or Terrain mode on normal roads could be dangerous or damage the vehicle. See *Driver Mode Control* ⇨ *234*.

Remove any brush or debris that has collected on the underbody or chassis, or under the hood. These accumulations can be a fire hazard. Reinstall underbody air deflector and air dam if removed.

After operation in mud or sand, have the brake linings cleaned and checked. These substances can cause glazing and uneven braking.
Check the body structure, driveline, steering, suspension, wheels, tires, and exhaust system for damage. Check the fuel lines and cooling system for any leakage.

More frequent maintenance service is required. See the *Maintenance Schedule* ⇨ *412*.

Off-Road App

Overview

The vehicle is equipped with an Off-Road App to assist in monitoring the motion and status of your vehicle, which can be beneficial in off-road environments. See *Off-Road Driving* ⇨ *193*.

The Off-Road App displays data such as the vehicle's pitch/roll angle, compass bearing and more. Some gauges track of the maximum values you have achieved, and you can reset the values to start over.

NOT FOR RESALE

⚠ Warning

Taking your eyes off the road for too long or too often while using any infotainment feature can cause a crash. You or others could be injured or killed. Do not give extended attention to infotainment tasks while driving. Limit your glances at the vehicle displays and focus your attention on driving. Use voice commands whenever possible.

Getting Started

To open the app, select the OFF-ROAD icon from the infotainment home screen. The available off-road tools and detailed widgets are displayed in a column at left.

If a gauge for a tool shows minimum and maximum values, touch the RESET icon on the screen to reset the minimum or maximum value.

The available off-road tools and widgets on the left-hand side include:

Camera App shortcut: Launches the Camera App for exterior camera views. See *Surround Vision System* ⇨ *278*.

Air Down mode: Set a custom tire pressure for better traction during off-road driving. See *Tire Pressure Monitor Operation* ⇨ *372*.

Auxiliary Switch shortcut: Launches the Auxiliary Switches page from the Controls app. See On-Screen Controls for information on how to use auxiliary switches. See *Auxiliary Switches* ⇨ *317*.

Drive and Park shortcut: Launches the Drive and Park page from the Controls app.

The available off-road widgets and gauges include:

Chassis and Tire Pressure: Displays steering angle in degrees of tilt for front and rear tires.

Displays tire pressure. See *Tire Pressure Monitor System* ⇨ *372*.

Displays transfer case state. See *Four-Wheel Drive* ⇨ *226*.

Displays axle locker state, if equipped. See *Locking Rear Axle* ⇨ *238* and *Locking Front Axle* ⇨ *239*.

Pitch and roll: Shows real-time vehicle pitch and roll. Maintain lowest and highest values, which can be reset as needed.

Altimeter: Displays current elevation. Maintains lowest and highest values, which can be reset as needed.

Compass: Displays direction of travel. If using the vehicle navigation, the GPS coordinates of your destination are also displayed.

Driving on Wet Roads

⚠ Warning

Wet brakes can cause crashes. They might not work as well in a quick stop and could cause pulling to one side. You could lose control of the vehicle.

After driving through a large puddle of water or a car/vehicle wash, lightly apply the brake pedal until the brakes work normally.

Flowing or rushing water creates strong forces. Driving through flowing water could cause the vehicle to be carried away. If this happens, you and other vehicle occupants could drown. Do not ignore police warnings and be very cautious about trying to drive through flowing water.

NOT FOR RESALE

Rain and wet roads can reduce traction and affect your ability to stop and accelerate. Always drive slower in these driving conditions and avoid driving through large puddles and deep-standing or flowing water.

Hydroplaning

Warning

Hydroplaning can cause a loss of steering ability, leading to a crash. Slow down and follow these other instructions to help avoid hydroplaning on wet roads.

Hydroplaning can occur on wet roads if water builds up under the tires, causing them to have little to no contact with the road.

Rainy Weather Tips

Besides slowing down, other wet weather driving tips include:

- Allow extra following distance.
- Pass with caution.
- Keep windshield wiping equipment in good condition.
- Fill the windshield washer fluid reservoir.
- Maintain proper tire pressure and tread depth. See *Tires* ⇨ *364*.
- Turn off any cruise control system, if equipped. See *Adaptive Cruise Control (Advanced)* ⇨ *240* or *Super Cruise* ⇨ *263*.
- Turn on the Traction Control System and StabiliTrak/Electronic Stability Control. See *Traction Control/Electronic Stability Control* ⇨ *232*.

Hill and Mountain Roads

Driving on steep hills or through mountains is different than driving on flat or rolling terrain. Tips include:

- Keep the vehicle serviced and in good shape.
- Check all fluid levels, brakes, tires, cooling system, and transmission.
- Shift to a lower gear when going down steep or long hills.

Warning

Using the brakes to slow the vehicle on a long downhill slope can cause brake overheating, can reduce brake performance, and could result in a loss of braking. Shift the transmission to a lower gear to let the engine assist the brakes on a steep downhill slope.

Warning

Coasting downhill in N (Neutral) or with the ignition off is dangerous. This can cause overheating of the brakes and loss of steering assist. Always have the engine running and the vehicle in gear.

- Drive at speeds that keep the vehicle in its own lane. Do not swing wide or cross the center line.
- Be alert on top of hills; something could be in your lane (e.g., stalled car, crash).
- Pay attention to special road signs (e.g., falling rocks area, winding roads, long grades, passing or no-passing zones) and take appropriate action.

NOT FOR RESALE

Winter Driving

Driving on Snow or Ice

Caution
To avoid damage to the wheels and brake components, always clear snow and ice from inside the wheels and underneath the vehicle before driving.

Snow or ice between the tires and the road causes less traction or grip, so drive carefully. Wet ice can occur at about 0 °C (32 °F) when freezing rain begins to fall. Avoid driving on wet ice or in freezing rain until the roads are treated.

For Slippery Road Driving:

- Accelerate gently. Accelerating too quickly causes the wheels to spin and makes the surface under the tires slick.
- Turn on the Traction Control System. See *Traction Control/Electronic Stability Control* ⇨ *232*.
- Apply the brakes sooner than you would on dry pavement. The Antilock Brake System (ABS) improves vehicle stability during hard stops. See *Antilock Brake System (ABS)* ⇨ *229*.
- Allow greater following distance and watch for slippery spots. Icy patches can occur on otherwise clear roads in shaded areas. The surface of a curve or an overpass can remain icy when the surrounding roads are clear. Avoid sudden steering maneuvers and braking while on ice.
- Turn off any cruise control system, if equipped. See *Adaptive Cruise Control (Advanced)* ⇨ *240* or *Super Cruise* ⇨ *263*.

Cold Weather Mode

In very low temperatures, a cold weather message may display on the Driver Information Center. The engine speed, transmission shift patterns, and cabin fan speed may operate differently to enable the vehicle to warm up quicker. You can manually override the cabin fan speed in cold weather mode.

Blizzard Conditions

Stop the vehicle in a safe place and signal for help. Stay with the vehicle unless there is help nearby. If possible, use Roadside Assistance. See *Roadside Assistance Program* ⇨ *429*. To get help and keep everyone in the vehicle safe:

- Turn on the hazard warning flashers.
- Tie a red cloth to an outside mirror.

⚠ Warning

Snow can trap engine exhaust under the vehicle. This may cause exhaust gases to get inside. Engine exhaust contains carbon monoxide (CO), which cannot be seen or smelled. It can cause unconsciousness and even death.

If the vehicle is stuck in snow:

- Clear snow from the base of the vehicle, especially any blocking the exhaust pipe.
- Open a window about 5 cm (2 in) on the vehicle side that is away from the wind, to bring in fresh air.

(Continued)

NOT FOR RESALE

Warning (Continued)

- Fully open the air outlets on or under the instrument panel.
- Adjust the climate control system to circulate the air inside the vehicle and set the fan speed to the highest setting. See "Climate Control Systems."

For more information about CO, see *Engine Exhaust* ⇨ *215*.

To save fuel, run the engine for short periods to warm the vehicle and then shut the engine off and partially close the window. Moving about to keep warm also helps.

If it takes time for help to arrive, when running the engine, push the accelerator pedal slightly so the engine runs faster than the idle speed. This keeps the battery charged to restart the vehicle and to signal for help with the headlights. Do this as little as possible, to save fuel.

If the Vehicle Is Stuck

⚠ Warning

If the vehicle's tires spin at high speed, they can explode, and you or others could be injured. The vehicle can overheat, causing an engine compartment fire or other damage. Spin the wheels as little as possible and avoid going above 56 km/h (35 mph).

Slowly and cautiously spin the wheels to free the vehicle when stuck in sand, mud, ice, or snow. See "Rocking the Vehicle to Get It Out" later in this section.

If equipped, the front and rear axles may be locked to improve traction. See *Locking Front Axle* ⇨ *239* and *Locking Rear Axle* ⇨ *238*.

The traction control system can often help to free a stuck vehicle. See *Traction Control/ Electronic Stability Control* ⇨ *232*. If using traction control cannot free the vehicle, see "Rocking the Vehicle to Get it Out" following.

For information about using tire chains on the vehicle, see *Tire Chains and Other Traction Devices* ⇨ *382*.

Rocking the Vehicle to Get It Out

Caution

Do not hold the steering wheel at full rotation for more than 15 seconds and/or at an elevated RPM. Damage may occur to the power steering system and there may be loss of power steering assist.

Turn the steering wheel left and right to clear the area around the front wheels. For four-wheel-drive vehicles, shift into Four-Wheel Drive High. Turn off traction control. Shift back and forth between R (Reverse) and a forward gear, spinning the wheels as little as possible. To prevent transmission wear, wait until the wheels stop spinning before shifting gears. Slowly spinning the wheels in the forward and reverse directions causes a rocking motion that could free the vehicle. If that does not get the vehicle out after a few tries, it might need to be towed out. See *Transporting a Disabled Vehicle* ⇨ *396*. Recovery hooks can be used, if equipped.

NOT FOR RESALE

Recovery Hooks

⚠ Warning

Never pull on the tow eye from the side. The tow eye could break and you and others could be injured. When using the tow eye, always pull the vehicle from the front.

Caution

Never use the tow eye to tow the vehicle. The vehicle could be damaged, and the repairs would not be covered by the vehicle warranty.



If the vehicle has recovery hooks at the front of the vehicle, use them if the vehicle is stuck off-road and needs to be pulled some place to continue driving.

Vehicle Load Limits

It is very important to know how much weight the vehicle can carry. This weight is called the vehicle capacity weight and includes the weight of all occupants, cargo, and all non-factory-installed options. Two labels on the vehicle may show how much weight it was designed to carry: the Tire and Loading Information label and the Certification/Tire label.

⚠ Warning

Do not load the vehicle any heavier than the Gross Vehicle Weight Rating (GVWR), or either the maximum front or rear Gross Axle Weight Rating (GAWR). This can cause systems to break and change the way the vehicle handles. This could cause loss of control

(Continued)

Warning (Continued)

and a crash. Overloading can also reduce stopping performance, damage the tires, and shorten the life of the vehicle.

Tire and Loading Information Label

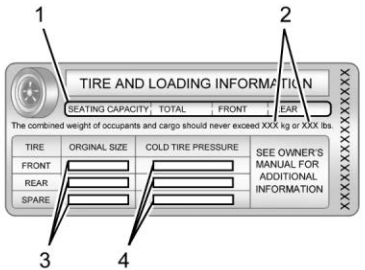
1
2
TIRE AND LOADING INFORMATION
SEATING CAPACITY TOTAL FRONT REAR
The combined weight of occupants and cargo should never exceed XXX kg or XXX lbs.
TIRE
ORGINAL SIZE
COLD TIRE PRESSURE
FRONT
REAR
SPARE
SEE OWNER'S MANUAL FOR ADDITIONAL INFORMATION
XXXX

NOT FOR RESALE

occupant seating positions (1), and the maximum vehicle capacity weight (2) in kilograms and pounds.

The Tire and Loading Information label also shows the size of the original equipment tires (3) and the recommended cold tire inflation pressures (4). For more information on tires and inflation see *Tires* ⇨ *364* and *Tire Pressure* ⇨ *370*.

There is also important loading information on the vehicle Certification/ Tire label. It may show the Gross Vehicle Weight Rating (GVWR) and the Gross Axle Weight Rating (GAWR) for the front and rear axles. See “Certification/Tire Label” later in this section.

Steps for Determining Correct Load Limit

1. Locate the statement "The combined weight of occupants and cargo should never exceed XXX kg or XXX lbs." on your vehicle’s placard.
2. Determine the combined weight of the driver and passengers that will be riding in your vehicle.
3. Subtract the combined weight of the driver and passengers from XXX kg or XXX lbs.
4. The resulting figure equals the available amount of cargo and luggage load capacity. For example, if the "XXX" amount equals 1400 lbs. and there will be five 150 lb passengers in your vehicle, the amount of available cargo and luggage load capacity is 650 lbs. (1400-750 (5 x 150) = 650 lbs.)
5. Determine the combined weight of luggage and cargo being loaded on the vehicle. That weight may not safely exceed the available cargo and luggage load capacity calculated in Step 4.
6. If your vehicle will be towing a trailer, load from your trailer will be transferred to your vehicle. Consult this manual to determine how this reduces the available cargo and luggage load capacity of your vehicle.

See *General Towing Information* ⇨ *316* for important information on towing a trailer, towing safety rules, and trailering tips.

If aftermarket accessories are installed on the vehicle, for example a rooftop carrier, be sure to add the weight of all installed accessories to the combined weight of luggage and cargo.

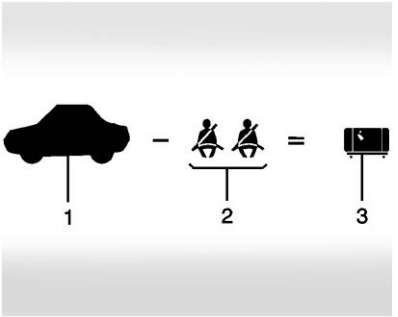

Example 1

1. Vehicle Capacity Weight for Example 1 = 453 kg (1,000 lb)

   Then subtract Accessory Weight, for example a rooftop cargo box = 15.8 kg (35 lb)
2. Subtract Occupant Weight @ 68 kg (150 lb) × 2 = 136 kg (300 lb)
3. Remaining available capacity for Cargo Weight = 301.2 kg (665 lb)

NOT FOR RESALE

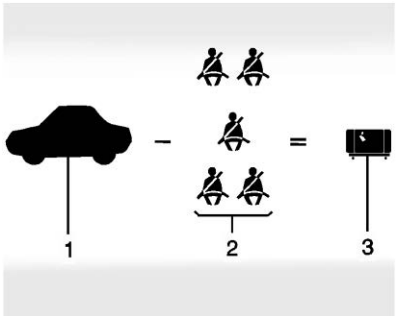

Example 2

1. Vehicle Capacity Weight for Example 2 = 453 kg (1,000 lb)

   Then subtract Accessory Weight, for example a rooftop cargo box = 18.1 kg (40 lb)
2. Subtract Occupant Weight @ 68 kg (150 lb) × 5 = 340 kg (750 lb)
3. Remaining available capacity for Cargo Weight = 94.9 kg (210 lb)

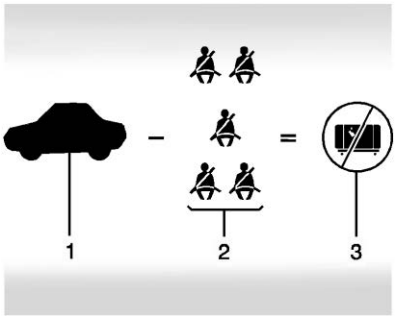

Example 3

1. Vehicle Capacity Weight for Example 3 = 453 kg (1,000 lb)
2. Subtract Occupant Weight @ 91 kg (200 lb) × 5 = 453 kg (1,000 lb)
3. Available Cargo Weight = 0 kg (0 lb)

Refer to the Tire and Loading Information label for specific information about the vehicle's capacity weight and seating positions. The combined weight of the driver, passengers, accessories, and cargo should never exceed the vehicle's capacity weight.

Certification/Tire Label

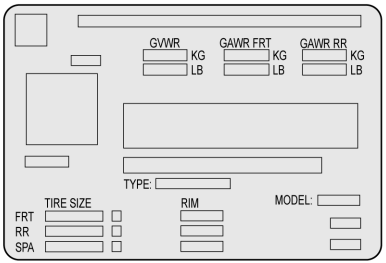

Label Example

A vehicle-specific Certification/Tire label is attached to the center pillar (B-pillar). The label may show the size of the vehicle's original tires and the inflation pressures needed to obtain the gross weight capacity of the vehicle. This is called Gross Vehicle Weight Rating (GVWR). The GVWR includes the weight of the vehicle, all occupants, and cargo.

The Certification/Tire label also may show the maximum weights for the front and rear axles, called Gross Axle Weight Rating

NOT FOR RESALE

(GAWR). To determine the actual loads on the front and rear axles, weigh the vehicle at a weigh station. Your dealer can help with this. Be sure to spread the load equally on both sides of the centerline.

The Certification/Tire label may also contain important information about the Front Axle Reserve Capacity.

⚠ Warning

In the case of a sudden stop or collision, things carried in the bed of your truck could shift forward and come into the passenger area, injuring you and others. If you put things in the bed of your truck, you should make sure they are properly secured.

Caution

Overloading the vehicle may cause damage. Repairs would not be covered by the vehicle warranty. Do not overload the vehicle.

Using heavier suspension components to get added durability might not change the weight ratings. Ask your dealer to help load the vehicle the right way.

⚠ Warning

Things you put inside the vehicle can strike and injure people in a sudden stop or turn, or in a crash.

- Put things in the cargo area of the vehicle. Try to spread the weight evenly.
- Never stack heavier things, like suitcases, inside the vehicle so that some of them are above the tops of the seats.
- Do not leave an unsecured child restraint in the vehicle.
- When you carry something inside the vehicle, secure it whenever you can.
- Do not leave a seat folded down unless you need to.

There is also important loading information for off-road driving in this manual. See “Loading the Vehicle for Off-Road Driving“ under *Off-Road Driving* ⇨ *193*.

Two-Tiered Loading

Depending on the model of the pickup, an upper load platform can be created by positioning three or four 5 cm (2 in) by 15 cm (6 in) wooden planks across the width of the pickup box. The planks must be inserted in the pickup box depressions.

When using this upper load platform, be sure the load is securely tied down to prevent it from shifting. The load's center of gravity should be positioned in a zone over the rear axle. The zone is located in the area between the front of each wheel well and the rear of each wheel well. The center of gravity height must not extend above the top of the pickup box flareboard.

Any load that extends beyond the vehicle's taillight area must be properly marked according to local laws and regulations.

NOT FOR RESALE

Remember not to exceed the Gross Axle Weight Rating (GAWR) of the front or rear axle.

Add-On Equipment

When carrying removable items, a limit on how many people carried inside the vehicle may be necessary. Be sure to weigh the vehicle before buying and installing the new equipment.

Caution
Overloading the vehicle may cause damage. Repairs would not be covered by the vehicle warranty. Do not overload the vehicle.

Remember not to exceed the Gross Axle Weight Rating (GAWR) of the front or rear axle.

* Equipment	Maximum Weight
Ladder Rack and Cargo	340 kg (750 lb)
Cross Toolbox and Cargo	181 kg (400 lb)
Side Boxes and Cargo	113 kg per side (250 lb per side)
* The combined weight for all rail-mounted equipment should not exceed 454 kg (1,000 lb).	

Loading Points

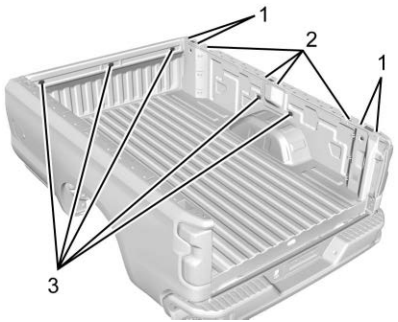

1. Primary Load Points
2. Secondary Load Areas
3. GM Approved Accessory Mounting Points

Structural members (1) and (2) are included in the pickup box design. Additional accessories should use these load points. Depending on the accessory design, use a spacer under the accessory at the load points to remove gap. The holes for GM approved accessories (3) are not intended for aftermarket equipment. See www.gmupfitter.com for additional pickup box load bearing structural information.

NOT FOR RESALE

Truck-Camper Loading Information

A vehicle-specific Truck-Camper Loading Information label is attached to the inside of the vehicle's glove box. This label indicates if a slide-in camper can be carried, how much of a load the vehicle can carry, and how to correctly spread out the load. It will help to match the right slide-in camper to the vehicle.

Your dealer can help make a good vehicle-camper match and help determine the Cargo Weight Rating (CWR).

When installing and loading a slide-in camper, check the manufacturer's instructions.

When carrying a slide-in camper, the total cargo load of the vehicle is the weight of the camper plus:

- Everything added to the camper after it left the factory.
- Everything in the camper.
- All the people inside.

The CWR is the maximum weight of the load the vehicle can carry. It does not include the weight of the people inside. But, use about 68 kg (150 lb) for each seat.

The total cargo load must not be more than the vehicle's CWR.

Refer to the Truck-Camper Loading Information label in the glove box for dimensions A and B as shown in the following illustration.

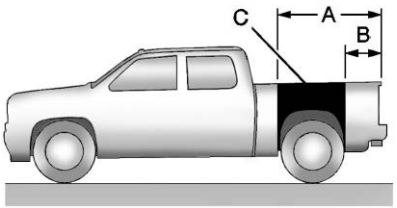

Use the rear edge of the load floor for measurement purposes. The recommended location for the cargo center of gravity is in zone C for the CWR. It is the point where the mass of a body is concentrated and, if suspended at that point, would balance the front and rear.

Here is an example of proper truck and camper match:

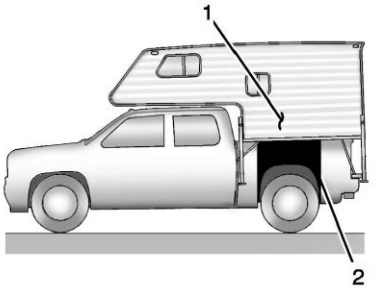

1. Camper Center of Gravity
2. Recommended Center of Gravity Location Zone

When the truck is used to carry a slide-in camper, the total cargo load of the truck consists of the manufacturer's camper weight figure, the weight of installed additional camper equipment not included in the manufacturer's camper weight figure, the weight of camper cargo, and the weight of passengers in the camper. The total cargo load should not

NOT FOR RESALE

exceed the truck's cargo weight rating, and the camper's center of gravity (1) should fall within the truck's recommended center of gravity zone (2) when installed.

Any accessories or other equipment that are added to the vehicle must be weighed. Then, subtract this extra weight from the CWR. This extra weight may shorten the center of gravity zone of the vehicle.

If the slide-in camper and its load weighs less than the CWR, the center of gravity zone for the vehicle may be larger.

Secure loose items to prevent weight shifts that could affect the balance of the vehicle. When the truck-camper is loaded, drive to a scale and weigh on the front and on the rear wheels separately to determine axle loads. Individual axle loads should not exceed either of the gross axle weight ratings (GAWR). The total axle loads should not exceed the vehicle's gross vehicle weight rating (GVWR). These ratings are given on the Certification/ Tire label attached to the B-pillar. See "Certification/Tire Label" under *Vehicle Load Limits* ⇨ *201*. If weight ratings are exceeded, move or remove items to bring all weights below the ratings.

See your dealer for more information on curb weights, cargo weights, Cargo Weight Rating, and the correct center of gravity zone.

Starting and Operating

New Vehicle Break-In

Caution

During the first 800 km (500 mi) of driving this vehicle, overall performance will benefit by following these break-in period recommendations:

- Avoid full throttle starts and abrupt stops.
- Avoid exceeding the following engine speeds when accelerating or downshifting to slow or brake the vehicle:

  Gasoline engines: 4000 rpm

(Continued)

Caution (Continued)

Diesel engines: 3000 rpm

- Avoid making hard stops for the first 300 km (200 mi). Hard stops with new brake linings can result in premature wear and earlier replacement. Follow this guideline every time brake linings are replaced.
- Do not tow a trailer. See *General Towing Information* ⇨ *316* for the trailer towing capabilities of the vehicle and more information.

After the break-in period, the engine speed and load can be gradually increased.

On new vehicles, the various mechanical and electrical systems adjust during the first 6,400 km (4,000 miles) of routine driving to provide optimal fuel economy and transmission shift performance.

Electrical systems will adapt and calibrate during the break-in period. A one-time occurrence of clicks and similar vehicle noises is normal during this process.

NOT FOR RESALE

Normal driving charges the vehicle battery to achieve the best operation of the vehicle.

Ignition Positions



Vehicles equipped with Keyless Access have pushbutton starting.

The remote key must be in the vehicle for the system to operate. If the pushbutton start is not working, the vehicle may be near a strong radio antenna signal causing interference to the Keyless Access system. See *Remote Key Operation* ⇨ *14*.

To shift out of P (Park), the vehicle must be on and the brake pedal must be applied.

⚠ Warning

Turning off the vehicle while moving will cause loss of power assist in the brake and steering systems and disable the airbags. While driving, only shut the vehicle off in an emergency.

Stopping the Engine/LOCK/OFF (No Indicator Lights): When the vehicle is stopped, press ENGINE START/STOP once to turn the engine off.

If the vehicle is in P (Park), the vehicle will turn off, and Retained Accessory Power will remain active. See *Retained Accessory Power (RAP)* ⇨ *214*.

If the vehicle is not in P (Park), the ignition will return to ON/RUN mode and display the message SHIFT TO PARK in the Driver Information Center. When the vehicle is shifted into P (Park), the ignition will turn off.

The vehicle may have an electric steering column lock. The lock is activated when the ignition is turned off and driver door is opened. A sound may be heard as the lock actuates or releases. The steering column lock may not release with the wheels turned off center. If this happens, the vehicle may not start. Move the steering wheel from left to right while attempting to start the vehicle. If this does not work, the vehicle needs service.

Do not turn the engine off when the vehicle is moving unless there is an emergency. This may cause a loss of power assist in the brake and steering systems and may disable the airbags.

If the vehicle must be shut off in an emergency:

1. If the vehicle cannot be pulled over, and must be shut off while driving, press and hold ENGINE START/STOP button for longer than two seconds, or press twice in five seconds.
2. Brake using a firm and steady pressure. Do not pump the brakes repeatedly. This may deplete power assist, requiring increased brake pedal force.
3. Shift the vehicle to N (Neutral). This can be done while the vehicle is moving. After shifting to N (Neutral), firmly apply the brakes and steer the vehicle to a safe location.
4. Come to a complete stop, shift to P (Park), and make sure engine is off. The shift lever must be in P (Park) to turn the vehicle off.

NOT FOR RESALE

5. Set the parking brake. See *Electric Parking Brake* ⇨ *229*.

⚠ Warning

Turning off the vehicle while moving will cause loss of power assist in the brake and steering systems and disable the airbags. While driving, only shut the vehicle off in an emergency.

Accessory Mode (Amber Indicator Light): This mode allows some electrical accessories to be used when the engine is off.

With the vehicle off, pressing the ENGINE START/STOP button one time without the brake pedal applied will place the vehicle in accessory mode.

The vehicle will switch from accessory mode to off after five minutes to prevent battery rundown.

ON/RUN/START (Green Indicator Light): This mode is for driving and starting. With the vehicle off, and the brake pedal applied, pressing ENGINE START/STOP button once will turn the ignition on. Once engine cranking begins, release the button. Engine cranking will continue until the engine starts. See *Starting the Engine (Diesel)* ⇨ *210 Starting the Engine (Gasoline)* ⇨ *209*.

Service Mode

This power mode is available for service and diagnostics, and to verify the proper operation of the malfunction indicator light as may be required for emission inspection purposes. With the vehicle off, and the brake pedal not applied, pressing and holding the ENGINE START/STOP button for more than five seconds will place the vehicle in Service Mode. The instruments and audio systems will operate as they do when the vehicle is on, but the vehicle will not be able to be driven. The engine will not start in Service Mode. Press the ENGINE START/STOP button again to turn the vehicle off.

Starting the Engine (Gasoline)

Caution

If you add electrical parts or accessories, you could change the way the engine operates. Any resulting damage would not be covered by the vehicle warranty. See *Add-On Electrical Equipment* ⇨ *316*.

Shift the vehicle into P (Park) or N (Neutral). To restart the engine when the vehicle is already moving, use N (Neutral) only.

Caution

Do not try to shift to P (Park) if the vehicle is moving. If you do, you could damage the transmission. Shift to P (Park) only when the vehicle is stopped.

Starting Procedure

1. The remote key must be in the vehicle. Press ENGINE START/STOP with the brake pedal applied. When the engine begins cranking, let go of the button.

   The idle speed will go down as the engine gets warm. Do not race the engine immediately after starting it. Operate the engine and transmission gently to allow the oil to warm up and lubricate all moving parts.

   When the low fuel warning light is on and the FUEL LEVEL LOW message is displayed in the Driver Information Center (DIC), press the ENGINE START/STOP position to continue engine cranking.

NOT FOR RESALE

Caution

Cranking the engine for long periods of time, by trying to start the engine immediately after cranking has ended, can overheat and damage the cranking motor, and drain the battery. Wait at least 15 seconds between each try, to let the cranking motor cool down.

2. If the engine does not start after 5 to 10 seconds, especially in very cold weather (below −18 °C or 0 °F), it could be flooded with too much gasoline. Try pushing the accelerator pedal all the way to the floor and holding it there while pressing ENGINE START/STOP for up to a maximum of 15 seconds. Wait at least 15 seconds between each try, to allow the cranking motor to cool down. When the engine starts, let go of the button and accelerator. If the vehicle starts briefly but then stops again, do the same thing. This clears the extra gasoline from the engine. Do not race the engine immediately after starting it. Operate the engine and transmission gently until the oil warms up and lubricates all moving parts.

Starting the Engine (Diesel)

The diesel engine starts differently than a gasoline engine.

Place the vehicle in P (Park) or N (Neutral). To restart the engine when the vehicle is already moving, use N (Neutral) only.

Caution

Do not try to shift to P (Park) if the vehicle is moving. If you do, you could damage the transmission. Shift to P (Park) only when the vehicle is stopped.

Starting the Engine

1. Place your foot on the brake and press ENGINE START/STOP.

   Observe the wait-to-start light. See *Wait-to-Start Light (Diesel)* ⇨ *128*. This light may not come on if the engine is warm.

2. The wait-to-start light may be illuminated, depending on temperature conditions. There will be a delay in engine cranking after pressing ENGINE START/STOP based on temperature conditions. In extremely cold temperatures the delay will be longer. At the end of the delay the engine will begin to crank and will continue to crank until the engine starts.

Caution

If the wait-to-start light stays on after starting the vehicle, the vehicle may not run properly. Have the vehicle serviced right away.

3. If the engine does not start after 15 seconds of cranking, turn the ignition off. Wait one minute for the cranking motor to cool, then try the same steps again.

If you are trying to start the engine after you have run out of fuel, follow the steps in *Running Out of Fuel* ⇨ *311*.

When the engine is cold, let it run for a few minutes before driving. This lets oil pressure build up. The engine will sound louder when it is cold.

For turbo protection, engine power at speeds above idle may be limited if the engine is cold. This protection can last up to a maximum of 40 seconds at extreme cold coolant and ambient temperatures.

NOT FOR RESALE

Cold Weather Starting

Use the recommended engine oil when the outside temperature drops below freezing. See *Engine Oil (Gasoline)* ⇨ *329 Engine Oil (Diesel)* ⇨ *331*. When the outside temperature drops below –18 °C (0 °F), use of the engine coolant heater is recommended.

If you experience longer cranking times, notice an unusual amount of exhaust smoke, or are at higher elevations (over 2 135 m or 7,000 ft), you may use the engine heater. See *Engine Heater* ⇨ *213*.

See *Recommended Fuel (L4B 2.7L L4 and L76 5.7L V8 Gasoline Engines)* ⇨ *304 Recommended Fuel (L78 6.6L V8 Gasoline Engine)* ⇨ *304 Recommended Fuel (Diesel)* ⇨ *305* for information on what fuel to use in cold weather.

If the Diesel Engine Will Not Start

If the vehicle runs out of fuel, see *Running Out of Fuel* ⇨ *311*.

If the vehicle is not out of fuel, and the engine will not start, place your foot on the brake and press ENGINE START/STOP.

- If the wait-to-start light does not go off, wait a few seconds, then try starting the engine again. See your dealer as soon as possible for a starting system check.
- If the wait-to-start light comes on and then goes off and you know the battery is charged, but the engine still will not start, the vehicle needs service.
- If the wait-to-start light does not come on when the engine is cold, the vehicle needs service.
- If the battery does not have enough charge to start the engine, see *Battery - North America* ⇨ *350*.
- Check that the correct engine oil has been used and changed at appropriate intervals. If the wrong oil is used, the engine may be harder to start.
- Be sure to use the proper fuel for existing weather conditions. See *Recommended Fuel (L4B 2.7L L4 and L76 5.7L V8 Gasoline Engines)* ⇨ *304 Recommended Fuel (L78 6.6L V8 Gasoline Engine)* ⇨ *304 Recommended Fuel (Diesel)* ⇨ *305*.
- If the engine starts, runs a short time, then stops, the vehicle needs service.

⚠ Warning

Do not use gasoline or starting aids, such as ether, in the air intake. They could damage the engine, which may not be covered by the vehicle warranty. They could also cause a fire, which could cause serious personal injury.

Engine Idle Variations

Under certain conditions the engine idle speed can vary or be elevated. Change in idle speed is normal and does not indicate a problem. Normal conditions that can raise idle speed are low voltage, DPF regeneration, air conditioning compressor loads, and engine warmup. These speeds can range from approximately 600 to 1000 rpm.

Stop/Start System

If equipped and enabled, the Auto Stop/Start feature shuts off the engine when the vehicle is at a stop to help conserve fuel.

NOT FOR RESALE

⚠ Warning

The automatic engine Stop/Start feature causes the engine to shut off while the vehicle is still on. Do not exit the vehicle before shifting to P (Park). The vehicle may restart and move unexpectedly. Always shift to P (Park), and then turn the ignition off before exiting the vehicle.

When the brakes are applied and the vehicle is at a complete stop, the engine may turn off. When stopped, the tachometer displays AUTO STOP. When the brake pedal is released or the accelerator pedal is pressed, the engine will restart.

Auto Stop/Start Deactivation Switch

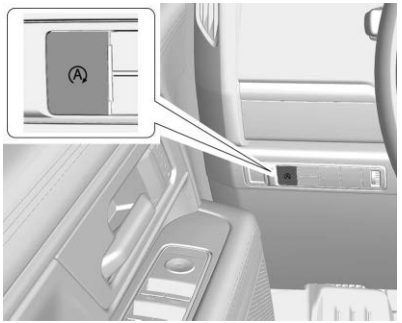

The Auto Stop/Start feature can be disabled and enabled by pressing Ⓐ.

When the Ⓐ indicator is illuminated, the system is enabled.

Auto Stop/Start Availability

Auto Stop/Start may or may not occur if:

- The climate control settings require the engine to be running to cool or heat the vehicle interior.
- The vehicle battery needs to charge.
- The vehicle battery was recently disconnected.
- Minimum vehicle speed has not been reached since the last Auto Stop.
- The accelerator pedal is pressed.
- The engine or transmission is not at the required operating temperature.
- The outside temperature is not in the required operating range.
- The vehicle is shifted out of D (Drive) to any gear other than P (Park).
- Certain driver modes have been selected. See *Driver Mode Control* ⇨ *234* and *Four-Wheel Drive* ⇨ *226*.
- The vehicle is on a steep hill or grade.
- The driver door is open or the driver seat belt is unbuckled.
- The hood is open.
- The Auto Stop has reached the maximum allowed time.

NOT FOR RESALE

Engine Heater

Warning

Do not plug in the engine block heater while the vehicle is parked in a garage or under a carport. Property damage or personal injury may result. Always park the vehicle in a clear open area away from buildings or structures.

If equipped, the engine heater can provide easier starting and better fuel economy during engine warm-up in cold weather conditions at or below −18 °C (0 °F). An internal thermostat in the plug-end of the cord may exist, which will prevent engine heater operation at temperatures above −18 °C (0 °F).

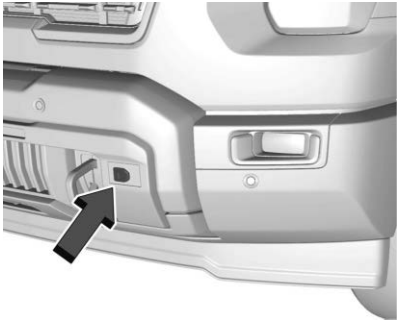

Base Model Shown

The connector may be located on the opposite side of the vehicle.

To Use the Engine Heater

1. Turn off the engine.
2. Check the heater cord for damage. If it is damaged, do not use it. See your dealer for a replacement. Inspect the cord for damage yearly.
3. Plug the heater cord into the connector on the vehicle.

Warning

Improper use of the heater cord or an extension cord can damage the cord and may result in overheating and fire.

- Plug the cord into a three-prong electrical utility receptacle that is protected by a ground fault detection function. An ungrounded outlet could cause an electric shock.
- Use a weatherproof, heavy-duty, 15 amp-rated extension cord if needed. Failure to use the recommended extension cord in good operating condition, or using a damaged heater or extension cord, could make it overheat and cause a fire, property damage, electric shock, and injury.
- Do not operate the vehicle with the heater cord permanently attached to the vehicle. Possible heater cord and thermostat damage could occur.
- While in use, do not let the heater cord touch vehicle parts or sharp edges. Never close the hood on the heater cord.

(Continued)

NOT FOR RESALE

Warning (Continued)

- Before starting the vehicle, unplug the cord, reattach the cover to the plug, and securely fasten the cord. Keep the cord away from any moving parts.

4. Plug the cord into a grounded 110-volt AC outlet that is protected by a ground fault detection function.
5. Before starting the engine, be sure to unplug and store the cord.

The length of time the heater should remain plugged in depends on several factors. Ask a dealer in the area where you will be parking the vehicle for the best advice on this.

Retained Accessory Power (RAP)

When you turn off the vehicle, the following features (if equipped) will continue to function for up to 10 minutes, or until the driver door is opened. These features will also work when the vehicle is on or in accessory mode:

- Infotainment System
- Power Windows (during Retained Accessory Power this functionality will be lost when any door is opened)
- Sunroof (during Retained Accessory Power this functionality will be lost when any door is opened)
- Auxiliary Power Outlet (during Retained Accessory Power this functionality will be lost when any door is opened)
- Audio System
- OnStar System

Parking over Things That Burn

⚠ Warning

Things that can burn could touch hot exhaust parts under the vehicle and ignite. Do not park over papers, leaves, dry grass, or other things that can burn.

Active Fuel Management (Gasoline)

If equipped, Active Fuel Management allows a V8, V6, or L4 gasoline engine to operate on either all of its cylinders, or a reduced number of cylinders, depending on the driving conditions. When less power is required, such as cruising at a constant vehicle speed, the system will enable reduced cylinder operation, allowing the vehicle to achieve better fuel economy. When greater power is required, such as accelerating from a stop, passing, or merging onto a freeway, the system will maintain full-cylinder operation.

Dynamic Fuel Management

If equipped, Dynamic Fuel Management calculates the number of cylinders needed to maximize fuel economy and meet the driving demands. Dynamic Fuel Management allows the engine to operate in multiple possible configurations ranging from zero-cylinder up to the full 8-cylinder operation.

Extended Parking (Gasoline)

It is best not to park with the vehicle running. If the vehicle is left running, be sure it will not move and there is adequate ventilation.

See *Automatic Transmission* ⇨ *222* and *Engine Exhaust* ⇨ *215*.

NOT FOR RESALE

If the vehicle is left parked and running with the remote key outside the vehicle, it will continue to run for up to 15 minutes.

If the vehicle is left parked and running with the remote key inside the vehicle, it will continue to run for up to 30 minutes.

The vehicle could turn off sooner if it is parked on a hill, due to lack of available fuel.

The timer will reset if the vehicle is taken out of P (Park) while it is running.

When the vehicle was produced, it came with the auto-shutdown feature enabled. If you are not the primary owner of your vehicle, please note that this feature may have been disabled by a previous owner. The vehicle owners can have this feature re-enabled at owner cost at any GM service center.

Extended Parking (Diesel)

This vehicle is not equipped with an automatic engine shutdown feature.

Engine Exhaust

⚠ Warning

Engine exhaust contains carbon monoxide (CO), which cannot be seen or smelled. Exposure to CO can cause unconsciousness and even death.

Exhaust may enter the vehicle if:

- The vehicle idles in areas with poor ventilation (parking garages, tunnels, deep snow that may block underbody airflow or tail pipes).
- The exhaust smells or sounds strange or different.
- The exhaust system leaks due to corrosion or damage.
- The vehicle exhaust system has been modified, damaged, or improperly repaired.
- There are holes or openings in the vehicle body from damage or aftermarket modifications that are not completely sealed.

(Continued)

Warning (Continued)

If unusual fumes are detected or if it is suspected that exhaust is coming into the vehicle:

- Drive it only with the windows completely down.
- Have the vehicle repaired immediately.

Never park the vehicle with the engine running in an enclosed area such as a garage or a building that has no fresh air ventilation.

Running the Vehicle While Parked

It is better not to park with the engine running.

If the vehicle is left with the engine running, follow the proper steps to be sure the vehicle will not move. See *Automatic Transmission* ⇨ *222* and *Engine Exhaust* ⇨ *215*.

If parking on a hill and pulling a trailer, see *General Towing Information* ⇨ *316*.

NOT FOR RESALE

Diesel Particulate Filter

The exhaust system has a Diesel Particulate Filter (DPF) to reduce vehicle emissions. On some exhaust systems with a DPF, the exhaust cooler mixes air with the exhaust to lower the temperature before it leaves the tailpipe.

The DPF, the tailpipe, and other exhaust system components must not be altered. Inspect regularly and clean any mud or dirt from the exhaust cooler, especially where the exhaust cooler connects to the tailpipe and the openings where fresh air enters the cooler.

The DPF will clean itself as part of normal operation. Several factors including fuel consumed, hours of engine operation, and miles driven are monitored by the Engine Control Module (ECM). The self-cleaning occurs approximately once per tank of fuel.

Vehicles with the DPF have specific fuel and engine oil requirements. See *Recommended Fuel (L4B 2.7L L4 and L76 5.7L V8 Gasoline Engines)* ⇨ *304 Recommended Fuel (L78 6.6L V8 Gasoline Engine)* ⇨ *304 Recommended Fuel (Diesel)* ⇨ *305* and *Engine Oil (Gasoline)* ⇨ *329 Engine Oil (Diesel)* ⇨ *331*.

Caution

Damage can occur to the DPF components if the required Ultra Low Sulfur Diesel (15 ppm sulfur maximum) fuel and engine oil specified in the Recommended Fluids and Lubricants section of this manual are not used. This damage would not be covered by the vehicle warranty.

Under certain conditions, such as idling or very short trips, the self-cleaning process has less efficiency and cannot be completed.

To resolve this, continue driving safely at a steady speed as close to the posted speed limit as possible, preferably without stopping, until the message turns off. This can take up to 30 minutes.

⚠ Warning

During DPF self-cleaning or during extended idling in P (Park), the exhaust system and exhaust gases are very hot. Things that burn could touch hot exhaust parts under the vehicle and ignite. You or

(Continued)

Warning (Continued)

others could be burned. Do not park, or idle for an extended period of time, near or over papers, leaves, dry grass, or other things that can burn. Keep the exhaust area clear of material that could ignite or burn. See *Parking over Things That Burn* ⇨ *214*.

Caution

Avoid extended idling because the DPF system is not capable of self-cleaning at idle. During extended idling, monitor the instrument cluster lights and DIC for messages and take appropriate action. Continued idling with the warning light/message on could cause damage to the DPF requiring repair and possible replacement that might not be covered by the vehicle warranty.

During self-cleaning there will be a change in the exhaust sound and engine idle speed. Along with this, a burning smell and reduction in fuel economy may be noticed. This is normal.

NOT FOR RESALE

If the vehicle is idled or driven on very short trips with the DPF warning message on and the exhaust filter is not cleaned as required, the malfunction indicator light and a DIC message will display. See your dealer. Also see *Malfunction Indicator Light (Gasoline Check Engine Light)* ⇨ *119 Malfunction Indicator Light (Diesel Check Engine Light)* ⇨ *121*.

See *Accessories and Modifications* ⇨ *321* if you are adding accessories or modifying the vehicle.

Manual Regeneration of Diesel Particulate Filter

This feature is only available on Fleet and Commercial vehicles.

To verify that the vehicle has this feature, refer to the Vehicle Service Parts Identification label (SPID) for RPO code FPF or see www.gmupfitter.com to contact the GM Upfitter Integration Group.

If equipped, this feature allows for manual cleaning/regeneration of the DPF when it is unable to clean itself. It may be necessary to perform manual regeneration if driving conditions — such as extended slow speed, stop-and-go traffic, extended idling, short drive cycles, or stationary PTO operation — prevent DPF self-cleaning.

Manual regeneration can only be used on most vehicles when the DPF has become at least 90% full. At 100% full, it will attempt to automatically self-clean if proper driving conditions are met. The DPF will clean itself if the vehicle can be driven for about 30 minutes.

A DIC message displays when manual regeneration is possible.

Scroll through the DIC pages to find the Exhaust Cleaning menu. Depending on whether the vehicle has a base or uplevel cluster, it may be under the Settings menu.

If the vehicle cannot be stopped when the DIC message first indicates cleaning is available, automatic self-cleaning may have begun. If conditions cannot be met for self-cleaning to complete, and manual regeneration is selected, it may take up to four minutes for the system to switch to manual regeneration. When the switch occurs, a DIC message prompts to start the cleaning process.

⚠ Warning

Do not leave the vehicle during the regeneration.

Make sure that there are no flammable materials near the muffler, DPF, and exhaust pipe which may result in a fire.

The temperature of exhaust gases is high enough to burn you. You and others could be seriously injured.

Before starting manual regeneration, make sure all of the following safety conditions are met:

- The vehicle is parked on level ground, away from any flammable materials.
- The vehicle is parked outdoors, away from any walls or buildings.
- The vehicle is at least 3 m (10 ft) from any obstructions or materials that may combust or melt.
- The shift lever is in P (Park).
- The fuel tank is at least one-eighth full.
- All fluids are at the proper level.

NOT FOR RESALE

- No diagnostic trouble codes have been set, and the malfunction indicator light is not on.
- The engine coolant temperature is above 71 °C (160 °F).

After making sure all safety conditions have been met, press the trip odometer reset stem or thumbwheel on the steering wheel for at least one second to select Start on the infotainment display.

Follow the instructions in the DIC messages. Touch ACCEPT to acknowledge that all of these safety conditions have been met and to activate regeneration.

If the infotainment display returns to the previous screen, then one or more of the necessary safety conditions has not been met. If you cannot determine which condition has not been met, see www.gmupfitter.com to contact the GM Upfitter Integration Group.

Continue to follow the instructions in the DIC messages. Hold the exhaust brake switch on the center stack below the climate controls for more than three seconds, and then release it, to begin the regeneration process.

If the EXHAUST BRAKE ON message displays, then the switch was released too soon. Press it again to turn off the exhaust brake, then try again when the DIC message prompts.

When manual regeneration begins, the engine speed increases, the engine cooling fan sound increases, and a DIC message indicates that cleaning is in progress.

A DIC message will display when cleaning is complete. Cleaning could take up to 30 minutes. Upon completion, the engine will return to normal idle, but exhaust components will remain hot for several minutes. Do not move the vehicle until the exhaust has had time to cool. Manual regeneration can be canceled at any time by pressing the brake pedal or by turning the engine off. Unusual noises may be heard if regeneration is interrupted.

Diesel Exhaust Fluid

⚠ Warning

Avoid getting Diesel Exhaust Fluid (DEF) on your skin or in your eyes as it could cause irritation. For more safety, handling, and storage information, see the Diesel Exhaust Fluid container label.

Caution

Use only diesel exhaust fluid (DEF) that is GM approved, or fluid containing the API certified or ISO 22241 label. The use of other fluids could damage the system, requiring costly repairs that will not be covered by the vehicle warranty.

Caution

Do not mix fuel with DEF. Do not put DEF in the fuel tank or fuel in the DEF tank. This will lead to costly repairs that will not

(Continued)

NOT FOR RESALE

Caution (Continued)

be covered by the vehicle warranty. In the event of a misfill, do not operate the vehicle and have the vehicle towed for service.

Diesel Exhaust Fluid (DEF) is used with diesel engines to reduce the amount of regulated emissions produced. Products such as AdBlue are types of DEF. The fluid level in the DEF tank must be maintained for the vehicle to run properly. DEF is not a fuel additive. DEF freezes when exposed to temperatures below −11 °C (12 °F). For DEF tank capacity see *Capacities and Specifications* ⇨ *420*.

It is normal to hear the DEF system purge fluid back into the tank after the vehicle is shut off.

Locating Diesel Exhaust Fluid

DEF can be purchased at your authorized dealers. Additionally, some diesel truck fueling stations or retailers may have DEF for purchase. See *Recommended Fluids and Lubricants* ⇨ *416*.

Filling the DEF Tank

Caution

Do not overfill the DEF tank and do not allow DEF to contact the finished surfaces of the vehicle, as it could damage the vehicle finish. If DEF is spilled during filling, wipe any affected surface with a damp cloth.

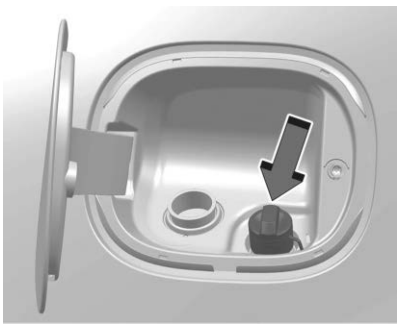

The blue DEF cap is behind the fuel/DEF door. Fill diesel fuel and DEF independently. Turn the DEF cap counterclockwise to remove.

In cold conditions DEF can freeze in the DEF fill pipe opening. If this prevents the filling of the DEF tank, place the vehicle in a warm garage overnight.

NOT FOR RESALE

DEF Gauge Indication	Approximate minimum volume of DEF that can be added *
	0 L (0 Gal)
	3.5 L (1 Gal)
	6.5 L (1.5 Gal)
	9.5 L (2.5 Gal)
	12.5 L (3.5 Gal)
	16 L (4 Gal)
	19 L (5 Gal)
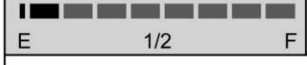	22 L (6 Gal)
* Final gauge reading after fill may not illuminate all segments	

Example Shown, Actual Gauge May Vary

Fill the DEF tank on level ground and with the vehicle off. When adding DEF, it is recommended to fully fill the DEF tank. For DEF tank capacity see *Capacities and Specifications* ⇨ *420*. When adding DEF to an empty or very low tank, always add at least 7.5L (2 gal) of fluid to release the vehicle from speed limitation.

If DEF is added under freezing conditions it may require less fluid to fill the DEF tank.

If using a bottle or jug to refill DEF, follow the instructions on the container label and use a dedicated fill aid.

1. Turn the DEF cap counterclockwise and remove the cap.
2. When fluid reaches the top of the DEF fill pipe, stop filling. Do not top off the DEF tank.
3. When replacing the DEF cap, turn it clockwise until it clicks. Make sure the cap is fully installed.
4. Close the fuel/DEF door.

DEF Low

As the DEF level drops, warnings will automatically be displayed in the Driver Information Center. To check the DEF level, see *Vehicle Status* ⇨ *131*.

Refill the DEF tank at the first opportunity after a low warning indication to avoid further warnings and vehicle speed limitations.

NOT FOR RESALE

Driving with an empty DEF tank can accelerate component wear and could lead to other system faults.

The Driver Information Center warning message indicating DEF range initially displays at approximately 800 km (500 mi). This warning message appears again when the remaining range reaches approximately 500 km (300 mi) and will appear each time the vehicle is started. When the remaining range reaches approximately 120 km (75 mi), a "DEF Range Low" warning will appear.

When "DEF Range Very Low" appears in the Driver Information Center, a mileage countdown will be initiated before the following speed limitation schedule begins:

1. Vehicle speed limited to 104 km/h (65 mph)
2. Vehicle speed limited to 88 km/h (55 mph)
3. Final speed limitation of 72 km/h (45 mph) along with flashing warning lights and chimes

DEF consumption is influenced by how the vehicle is used. When operating the vehicle under heavy load conditions, such as during towing, the DEF consumption rate will increase, and the DEF range warning messages may appear earlier than anticipated.

After refilling the DEF tank, it may take some time while driving for the vehicle to detect that DEF has been added. If there was a vehicle speed limitation, it will be removed gradually, and it may take several kilometers/miles for the Driver Information Center message to update.

If DEF is added below −11 °C (12 °F), additional driving time may be required to remove speed limitations.

For the DEF warning light symbol, see *Diesel Exhaust Fluid (DEF) Warning Light (Diesel)* ⇨ *129*.

DEF Quality Poor

Use only DEF that is GM approved, or fluid containing the API certified or ISO 22241 label.

DEF has an expiration date. If the system detects poor quality, or contaminated or diluted DEF, a Driver Information Center message may display along with distance until vehicle speed is limited.

The speed limitation will occur in a series of steps with the final speed limitation being 72 km/h (45 mph) along with a flashing warning light and chimes.

Adding fresh DEF to the system may resolve the problem after several kilometers/miles of driving, depending on several factors. If the Driver Information Center message persists, see your dealer or additional Driver Information Center messages may display.

Service DEF System

If a problem occurs with the vehicle emissions system, a Driver Information Center message may display along with distance until vehicle speed is limited.

The speed limitation will occur in a series of steps with the final speed limitation being 72 km/h (45 mph) along with a flashing warning light and chimes.

In some cases, this message will clear itself, indicating that the emission system was able to correct the condition. If the Driver Information Center message persists, see your dealer or additional Driver Information Center messages may display.

NOT FOR RESALE

Automatic Transmission



Automatic Transmission Shift Pattern

- The shift pattern is displayed on the front of the shift lever.
- The selected gear position will illuminate red, while others are displayed in white.
- In frigid conditions, the indicator may blink until fully engaged.

Shifter Positions

P (Park): Use this position when starting the vehicle to ensure the vehicle does not move. This position locks the drive wheels.

R (Reverse): Use this gear position to back up.

N (Neutral): In this gear position, the engine does not connect with the wheels. To restart the engine when the vehicle is already moving, use N (Neutral) only.

D (Drive): Use this gear position for normal driving.

L (Low): This gear position provides additional coast braking for downhill driving, trailer towing, or hauling a heavy load. See *Manual Mode* ⇨ *225*.

Shifting Into Gear Positions

1. Ensure the engine is running.
2. Apply the brake pedal.
3. Move the shift lever to the desired position.

   After releasing the shift lever, it will return to the center position.

   The P indicator will turn white and the selected gear indicator on the shift lever will turn red when the vehicle is no longer in P (Park).

If you cannot shift out of P (Park), check the Driver Information Center for an issue message. If you have followed Steps 1–3 as directed and your vehicle will still not shift out of P (Park), see your dealer for service.

Shifting Into Park

⚠ Warning

Parking on grades with poor traction such as ice, snow, mud, or gravel may cause the vehicle to unintentionally move and could result in injury, death, and/or vehicle damage. If equipped with four-wheel drive, use AUTO or 4 (High) to provide additional traction. Be sure to apply the parking brake. See *Electric Parking Brake* ⇨ *229* and *Four-Wheel Drive* ⇨ *226*.

⚠ Warning

If equipped with four-wheel drive, the vehicle will be free to roll if the transfer case is in N (Neutral), even when the shift lever is in P (Park). You or someone else could be seriously injured. Be sure the transfer case is in a drive gear — 2↑, 4↑, or 4↓ — or set the parking brake before placing the transfer case in N (Neutral). See *Four-Wheel Drive* ⇨ *226*.

1. Apply the brake pedal and set the parking brake. See *Electric Parking Brake* ⇨ *229*.

NOT FOR RESALE

2. Press the P (Park) switch at the end of the shift lever.
3. When the vehicle is stopped, press ENGINE START/STOP to turn off the vehicle. The vehicle will shift to P (Park) automatically unless the vehicle is in N (Neutral), see "Car Wash Mode" later in this section.
4. The P indicator on the shift lever will turn red when the vehicle is in P (Park).

If the vehicle is shifted into P (Park) on a hill, the parking brake may apply automatically. The driver may not be able to release the parking brake using the parking brake switch. It should automatically release when the vehicle is shifted out of P (Park).

Leaving the Vehicle with the Engine Running

⚠ Warning

It can be dangerous to leave the vehicle with the engine running. It could overheat and catch fire.

It is dangerous to get out of the vehicle if the vehicle is not in P (Park) with the parking brake firmly set. The vehicle can roll.

(Continued)

Warning (Continued)

Do not leave the vehicle when the engine is running. If you have left the engine running, the vehicle can move suddenly. You or others could be injured. To be sure the vehicle will not move, even when you are on fairly level ground, always set the parking brake and shift to P (Park).

If you must leave the vehicle with the engine running, be sure the vehicle is in P (Park) and the parking brake is set. After pressing the P (Park) switch, hold the regular brake pedal down. If you cannot see the P (Park) indicator in the instrument cluster, it means that the vehicle has not shifted to P (Park). Repeat the process until the vehicle is safely shifted into P (Park).

Service Shift Lever Message

A SERVICE SHIFTER SEE OWNER'S MANUAL message indicates an issue with the shift lever. If this message is a result of the vehicle automatically shifting into P (Park) and you need to move your vehicle to a safe location, try holding the shift lever in D (Drive) or R (Reverse) until the speed exceeds 16 km/h (10 mph). Have the vehicle serviced as soon as possible.

R (Reverse):

To shift into R (Reverse):

1. Bring the vehicle to a complete stop.
2. From the center position, move the shift lever rearward toward you, and then up.

If the vehicle is shifted from either R (Reverse) to D (Drive) or L (Low), or D (Drive) or L (Low) to R (Reverse) while at a high speed, the vehicle may shift to N (Neutral). Decelerate and try the shift again.

At low vehicle speeds, R (Reverse) can be used to rock the vehicle back and forth to get out of snow, ice, or sand without damaging the transmission. See *If the Vehicle Is Stuck ⇨ 200*.

D (Drive):

Caution

A transmission hot message may display if the automatic transmission fluid is too hot. Driving under this condition can damage the vehicle. Stop and idle the engine to cool the automatic transmission fluid. This message clears when the transmission fluid has cooled sufficiently.

NOT FOR RESALE

Caution

Spinning the tires or holding the vehicle in one place on a hill using only the accelerator pedal may damage the transmission. The repair will not be covered by the vehicle warranty. If the vehicle is stuck, do not spin the tires. When stopping on a hill, use the brakes to hold the vehicle in place.

To shift into D (Drive):

1. Ensure the vehicle is at a complete stop.
2. From the center position, move the shift lever rearward and then down.

N (Neutral):

Caution

The vehicle is not designed to stay in N (Neutral) for extended periods of time. It will automatically shift into P (Park).

To shift into N (Neutral), move the shift lever rearward. If the vehicle is in P (Park), apply the brake pedal while moving the shift lever rearward.

If you press ENGINE START/STOP twice while at high speed, the engine will turn off and the transmission will automatically shift to N (Neutral). Once the vehicle is stopped, shift to P (Park) and the vehicle will turn off.

Car Wash Mode

The Car Wash mode allows the vehicle to remain in N (Neutral) for use in automatic car washes. Do not use Car Wash mode for vehicle towing. If the vehicle needs to be towed, see *Transporting a Disabled Vehicle* ⇨ *396*.

Car Wash Mode (Engine Off – Driver In Vehicle)

To place the vehicle in N (Neutral) with the engine off and vehicle occupied:

1. Drive to the car wash entrance.
2. Apply the brake pedal.
3. Shift to N (Neutral).
4. Turn off the engine and release the brake pedal.
5. The indicator should continue to show N. If it does not, repeat Steps 2–4.

Car Wash Mode (Engine Off – Driver Out of Vehicle)

To place the vehicle in N (Neutral) with the engine off and vehicle unoccupied:

1. Drive to the car wash entrance.
2. Apply the brake pedal.
3. Open the door.
4. Shift to N (Neutral).
5. Turn off the engine and release the brake pedal.
6. The indicator should continue to show N. If it does not, repeat Steps 2–5.
7. Exit the vehicle and close the door.

Car Wash Mode (Engine On – Driver In Vehicle)

To place the vehicle in N (Neutral) with the engine on and vehicle occupied:

1. Drive to the car wash entrance.
2. Apply the brake pedal.
3. Shift to N (Neutral).
4. Release the brake pedal.

NOT FOR RESALE

Car Wash Mode (Engine On – Driver Out of Vehicle)

To place the vehicle in N (Neutral) with the engine on and vehicle unoccupied:

1. Drive to the car wash entrance.
2. Apply the brake pedal.
3. Open the door.
4. Shift to N (Neutral), then release the brake pedal.
5. The indicator should continue to show N. If it does not, repeat Steps 2–4.
6. Exit the vehicle and close the door.
7. The vehicle may automatically shift into P (Park) upon reentry.

Manual Mode

Electronic Range Select

Caution
Driving with the engine at a high rpm without upshifting while using Manual Mode, could damage the vehicle. Always upshift when necessary while using Manual Mode.



Electronic Range Select allows for the selection of the range of gear positions. Use this mode when driving downhill or towing a trailer to limit the top gear and vehicle speed. The shift position indicator within the Driver Information Center will display a number next to the L indicating the highest available gear.

To enter manual mode:

1. With the vehicle in D (Drive), press the L (Low) button on the steering wheel or move the shift lever rearward and then down. The L in the instrument cluster will be highlighted and the D will be unhighlighted.
2. Pull the left steering wheel control toward you to reduce the highest gear available, or the right control to increase the highest gear available.
3. To exit L (Low) and shift into D (Drive), move the shift lever rearward and then down or press the L (Low) button. The D in the instrument cluster will be highlighted and the L will be unhighlighted.

When shifting to L (Low), the transmission will shift to a preset lower gear range. For this preset range, the highest gear available will be displayed next to the L in the Driver Information Center. See *Driver Information Center (DIC)* ⇨ *131*. All gears below that number are available to use. For example, when 4 (Fourth) is shown next to the L, 1 (First) through 4 (Fourth) gears are shifted automatically. To shift to 5 (Fifth) gear, pull the right steering wheel control or shift into D (Drive).

L (Low) will prevent shifting to a lower gear range if the engine speed is too high. If the vehicle speed is not reduced within the time allowed, the lower gear range shift will not be completed. Slow the vehicle, then pull the left steering wheel control to the desired lower gear range.

NOT FOR RESALE

Cruise control can be used while in manual mode.

Drive Systems

Four-Wheel Drive

Warning

If equipped with four-wheel drive, the vehicle will be free to roll if the transfer case is in N (Neutral), even when the shift lever is in P (Park). You or someone else could be seriously injured. Be sure the transfer case is in a drive gear — 2↑, 4↑, or 4↓ — or set the parking brake before placing the transfer case in N (Neutral). See *Automatic Transmission* ⇨ *222*.

Caution

Extended high-speed operation in 4↑ or 4↓ may damage or shorten the life of the drivetrain. For extended high-speed operation, AUTO is recommended.

Caution

Do not drive on clean, dry pavement in 4↑ or 4↓ for an extended period of time. These conditions may cause:

- Overheating.
- Oil leakage.
- Damage to internal and external components of the front axle.
- Premature wear on the vehicle's powertrain.
- Additional driveline noise.

Driving on clean, dry pavement in 4↑ or 4↓ may:

- Cause a vibration to be felt in the steering system.
- Cause tires to wear faster.

If equipped, the Four-Wheel Drive System engages the front axle for extra traction. The transfer case control panel is on the center stack. See *Instrument Panel Overview* ⇨ *5*.

Read the appropriate section for transfer case operation before using.

Automatic Transfer Case

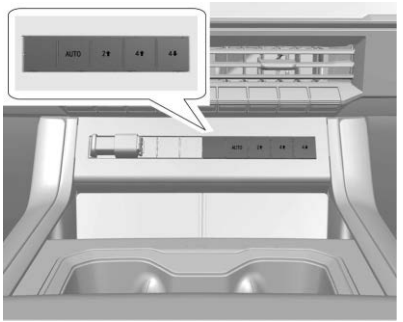

Two-Speed Transfer Case Shown, Single Speed Transfer Case Similar

Two-Speed Transfer Case

Caution

Shifting the transmission into gear before the requested mode indicator light has stopped flashing could damage the transfer case.

NOT FOR RESALE

If equipped, press the desired button on the transfer case control panel to shift into and out of four-wheel drive. The actual shift request is only made after the button is released.

While a shift is in progress, a message will appear in the Driver Information Center and a light will flash in the instrument cluster. Once the shift is complete, the message will turn off and the light will be steady. See *Four-Wheel-Drive Light* ⇨ *123*.

If the transfer case cannot complete a shift request, it will go back to its last chosen setting.

It is normal to hear an engagement noise and feel a bump when shifting between 4↓ and 4↑ or N (Neutral), with the engine on.

Shifts from 4↑ to 2↑ may be delayed due to uneven tire wear, low tire pressure, high vehicle loading, or cold temperatures.

The settings are:

N (Neutral): Use only when the vehicle needs to be towed. See *Recreational Vehicle Towing* ⇨ *397* or *Transporting a Disabled Vehicle* ⇨ *396*.

2↑ (Two-Wheel Drive High): Use for driving on most streets and highways. The front axle is not engaged. This setting provides the best fuel economy.

AUTO (Automatic Four-Wheel Drive): Use when road surface conditions are variable. When driving in AUTO, the front axle is engaged, and the vehicle sends power to the front and rear wheels automatically based on driving conditions. This setting provides slightly lower fuel economy than 2↑.

4↑ (Four-Wheel Drive High): Use for extra traction, such as when off-roading, plowing snow, or driving on snowy or icy roads. The front axle is engaged.

4↓ (Four-Wheel Drive Low): Use when off-roading in deep sand, mud, or snow, and while climbing or descending steep hills. This setting engages the front axle and delivers extra torque. While driving in 4↓, keep vehicle speed below 72 km/h (45 mph).

Shifting into 4↓ will turn Traction Control and StabiliTrak/Electronic Stability Control off. See *Traction Control/Electronic Stability Control* ⇨ *232*.

Shifting between 2↑, 4↑, and AUTO

You can make any of these shifts at normal driving speed.

When the vehicle shifts to 2↑ successfully while in P (Park), the parking brake will engage. To resume driving, shift the transmission to the desired gear and manually release the parking brake or press the accelerator pedal.

See *Electric Parking Brake* ⇨ *229*.

If equipped, use 4↓, AUTO, or 4↑ to provide additional traction when parking on a steep grade with poor traction such as ice, snow, mud, or gravel.

Shifting Into 4↓

1. Turn the vehicle on.
2. Shift into N (Neutral).
3. Stop the vehicle or ensure the speed is less than 5 km/h (3 mph). It is best for the vehicle to be moving 1.6 to 3.2 km/h (1 to 2 mph).
4. Press 4↓.

If the vehicle is not in N (Neutral) or is moving faster than 5 km/h (3 mph) when you request 4↓, a Driver Information Center message will display. The vehicle will allow 20 seconds for the speed to be reduced or the vehicle to be shifted into N (Neutral). If this is not completed, the transfer case will remain in its original state, and the corresponding light will show in the instrument cluster.

Shifting Out of 4↓

1. Turn the vehicle on.

NOT FOR RESALE

2. Shift into N (Neutral).
3. Stop the vehicle or ensure the speed is less than 5 km/h (3 mph). It is best for the vehicle to be moving 1.6 to 3.2 km/h (1 to 2 mph).
4. Press 4↑, AUTO, or 2↑.

If the vehicle is not in N (Neutral) or is moving faster than 5 km/h (3 mph) when the shift request occurs, a Driver Information Center message will display. The vehicle will allow 20 seconds for the speed to be reduced or the vehicle to be shifted into N (Neutral). If this is not completed, the transfer case will remain in its original state, and the corresponding light will show in the instrument cluster.

Shifting Into N (Neutral)

1. Turn the vehicle on.
2. Shift into N (Neutral).
3. Stop the vehicle or ensure the speed is less than 5 km/h (3 mph). It is best for the vehicle to be moving 1.6 to 3.2 km/h (1 to 2 mph).
4. Press 2↑.
5. Apply the parking brake and/or brake pedal.
6. Press 2↑ five times in 10 seconds until the N (Neutral) light starts flashing in the instrument cluster. When the shift is complete, the light stops flashing.

If the vehicle is not shifted into N (Neutral), is moving faster than 5 km/h (3 mph), or the parking brake and/or brake pedal is not applied within 20 seconds, the transfer case will remain in its original state and the corresponding light will show in the instrument cluster.

Shifting Out of N (Neutral)

1. Turn the vehicle on.
2. Set the parking brake. See *Electric Parking Brake* ⇨ *229*.
3. Shift into N (Neutral).
4. Press 2↑. Transfer case shifts out of N (Neutral) can only be made into 2↑.

Single Speed Transfer Case

Caution
Shifting the transmission into gear before the requested mode indicator light has stopped flashing could damage the transfer case.

If equipped, press the desired button on the transfer case control panel to shift into and out of four-wheel drive. The actual shift request is only made after the button is released.

While a shift is in progress, a message will appear in the Driver Information Center and a light will flash in the instrument cluster. Once the shift is complete, the message will turn off and the light will be steady. See *Four-Wheel-Drive Light* ⇨ *123*.

If the transfer case cannot complete a shift request, it will go back to its last chosen setting.

The settings are:

2↑ (Two-Wheel Drive High): Use for driving on most streets and highways. The front axle is not engaged. This setting provides the best fuel economy.

4↑ (Four-Wheel Drive High): Use for extra traction, such as when off-roading, plowing snow, or driving on snowy or icy roads. The front axle is engaged.

AUTO (Automatic Four-Wheel Drive): Use when road surface conditions are variable. When driving in AUTO, the front axle is engaged, and the vehicle sends power to the

NOT FOR RESALE

front and rear wheels automatically based on driving conditions. This setting provides slightly lower fuel economy than 2↑.

Shifting between 2↑, 4↑, and AUTO

You can make any of these shifts at normal driving speed.

When the vehicle shifts to 2↑ successfully while in P (Park), the parking brake will engage. To resume driving, shift the transmission to the desired gear and manually release the parking brake or press the accelerator pedal to begin driving. See *Electric Parking Brake* ⇨ *229*.

If equipped, use AUTO or 4↑ to provide additional traction when parking on a steep grade with poor traction such as ice, snow, mud, or gravel.

Brakes

Electric Brake Boost

Vehicles equipped with electric brake boost have hydraulic brake circuits that are electronically controlled when the brake pedal is applied during normal operation. The system performs routine tests and turns off within a few minutes after the vehicle is turned off. Noise may be heard during this time. If the brake pedal is pressed during the tests or when the electric brake boost system is off, a noticeable change in pedal force and travel may be felt. This is normal.

Antilock Brake System (ABS)

The Antilock Brake System helps to prevent skidding and maintain steering control during hard braking.



If there is a problem, the Antilock Brake System warning light stays on. See *Brake System Warning Light* ⇨ *122*.

Using Antilock Brakes

Do not pump the brakes. Just hold the brake pedal down firmly. It is normal to hear and feel the Antilock Brake System operating.

Braking in Emergencies

The Antilock Brake System does not always decrease stopping distance. If a vehicle suddenly slows or stops, there may not be enough time to apply the brakes. Always allow enough following distance between your vehicle and the vehicle ahead.

The Antilock Brake System allows you to steer and brake at the same time. In many emergencies, steering to make an evasive maneuver can be more effective than braking.

Electric Parking Brake

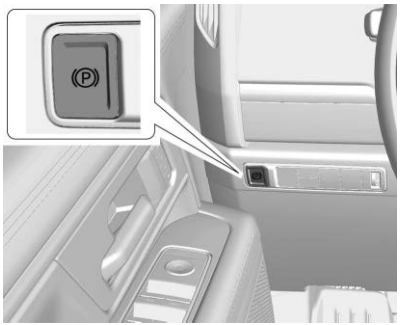

NOT FOR RESALE

The Electric Parking Brake can always be applied, even if the vehicle is off. In case of insufficient electrical power, the Electric Parking Brake cannot be applied or released. To prevent draining the battery, avoid unnecessary repeated cycles of the Electric Parking Brake.

The system has a red parking brake status light and an amber service parking brake warning light. See *Electric Parking Brake Light* ⇨ *122* and *Service Electric Parking Brake Light* ⇨ *123*. There are also parking brake-related Driver Information Center messages.

Before leaving the vehicle, check the red parking brake status light to ensure that the parking brake is applied.

Electric Parking Brake Apply

Caution
Driving with the parking brake on can overheat the brake system and cause premature wear or damage to brake system parts. Make sure that the parking brake is fully released and the brake warning light is off before driving.

To apply the Electric Parking Brake:

1. Be sure the vehicle is at a complete stop.
2. Press the Electric Parking Brake switch momentarily.

The red parking brake status light will flash and then stay on once the Electric Parking Brake is fully applied. If the red parking brake status light flashes continuously, then the Electric Parking Brake is only partially applied or there is a problem with the Electric Parking Brake. A Driver Information Center message will display. Release the Electric Parking Brake and try to apply it again. If the light does not come on, or keeps flashing, have the vehicle serviced. Do not drive the vehicle if the red parking brake status light is flashing, see your dealer.

If the amber service parking brake warning light is on, press the Electric Parking Brake switch. Continue to hold the switch until the red parking brake status light remains on. If the amber service parking brake warning light is on, see your dealer.

If the Electric Parking Brake is applied while the vehicle is moving, the vehicle will decelerate as long as the switch is pressed. If the switch is pressed until the vehicle comes to a stop, the Electric Parking Brake will remain applied.

The vehicle may automatically apply the Electric Parking Brake in some situations when the vehicle is not moving. This is normal, and is done to periodically check the correct operation of the Electric Parking Brake system, or at the request of other safety functions that utilize the Electric Parking Brake.

For vehicles not equipped with Electronic Transmission Range Selector, if you open the driver's door prior to shifting the transmission to the P (Park) position, the Electric Parking Brake will automatically apply in order to insure the vehicle will not roll away.

If the Electric Parking Brake fails to apply, block the rear wheels to prevent vehicle movement.

Electric Parking Brake Release

To release the Electric Parking Brake:

1. Turn the vehicle on.
2. Apply and hold the brake pedal.
3. Press the Electric Parking Brake switch momentarily.

NOT FOR RESALE

The Electric Parking Brake is released when the red parking brake status light is off.

If the amber service parking brake warning light is on, release the Electric Parking Brake by pressing and holding the Electric Parking Brake switch. Continue to hold the switch until the red parking brake status light is off. If either light stays on after release is attempted, see your dealer.

Automatic Electric Parking Brake Release

The Electric Parking Brake will automatically release if the vehicle is running, placed into gear, and an attempt is made to drive away. Avoid rapid acceleration when the Electric Parking Brake is applied, to preserve parking brake lining life.

Exhaust Brake (3.0L Diesel)

Exhaust braking is automatically activated when Tow/Haul Mode is selected. It maintains the vehicle's speed by automatically implementing a shift pattern that uses the engine and the transmission to slow the vehicle. The system will command downshifts and use the turbocharger on the engine to reduce the vehicle's speed when the brake is applied. The normal tow/haul shift pattern will return once the vehicle is on a low grade or when the accelerator pedal is pressed.

While in the Electronic Range Select Mode, grade braking is deactivated, allowing the driver to select a range and limiting the highest gear available. See *Manual Mode* ⇨ *225*.

Brake Assist

Brake Assist detects rapid brake pedal applications due to emergency braking situations. It also provides additional braking to activate the Antilock Brake System if the brake pedal is not applied hard enough to activate it normally. Minor noise, brake pedal pulsation, and/or pedal movement during this time may occur. Continue to apply the brake pedal as the driving situation dictates. Brake Assist disengages when the brake pedal is released.

Post-Collision Braking (Secondary Collision Mitigation Braking)

This vehicle has a post-collision braking feature that may automatically engage to help slow your vehicle down after a crash. The feature may be disengaged by fully pressing the brake or accelerator pedal.

Hill Start Assist (HSA)

⚠ Warning

Do not rely on the HSA feature. HSA does not replace the need to pay attention and drive safely. You may not hear or feel alerts or warnings provided by this system. Failure to use proper care when driving may result in injury, death, or vehicle damage. See *Defensive Driving* ⇨ *190*.

When the vehicle is stopped on a grade, Hill Start Assist prevents the vehicle from rolling in an unintended direction during the transition from brake pedal release to accelerator pedal apply. The brakes release when the accelerator pedal is applied. The brakes may also release under other conditions. Do not rely on Hill Start Assist to hold the vehicle.

Hill Start Assist is available when the vehicle is facing uphill in a forward gear, or when facing downhill in R (Reverse). The vehicle must come to a complete stop on a grade for Hill Start Assist to activate.

NOT FOR RESALE

Ride Control Systems

Traction Control/Electronic Stability Control

This vehicle has a Traction Control System and a StabiliTrak/Electronic Stability Control system. These systems help limit wheel spin and assist the driver in maintaining control, especially on slippery road conditions. Both systems turn on automatically when the vehicle is started and begins to move.

The Traction Control System activates if any of the drive wheels are spinning and beginning to lose traction. If this happens, the traction system reduces power and applies the brakes to limit wheel spin.

The StabiliTrak/Electronic Stability Control system activates when the vehicle senses a difference between the intended path and the direction the vehicle is actually traveling. The stability control system selectively applies braking pressure to any one of the vehicle wheel brakes to assist the driver in keeping the vehicle on the intended path.

If cruise control is engaged and the traction or stability control system begins to limit wheel spin, cruise control will disengage. Cruise control may be turned back on when road conditions allow.

The systems may be heard or felt while they are operating or while performing diagnostic checks. This is normal and does not mean there is a problem with the vehicle.

It is recommended to leave both systems on for normal driving conditions, but it may be necessary to turn the Traction Control System off if the vehicle gets stuck in sand, mud, ice, or snow. See *If the Vehicle Is Stuck ⇨ 200* and "Turning the Systems Off and On" later in this section.

If equipped, Trailer Sway Control turns on automatically when the vehicle is started. See *General Towing Information ⇨ 316*.

Cruise control will disengage if the traction or stability control system begins to limit wheel spin. Cruise control may be turned back on when road conditions allow. See *Adaptive Cruise Control (Advanced) ⇨ 240*.

When the vehicle, if equipped, is in Four-Wheel Drive Low, the Traction Control System and StabiliTrak/Electronic Stability Control system are automatically disabled, OFF turns on, and the appropriate message will appear on the Driver Information Center.



The indicator light for both systems is in the instrument cluster. This light will:

- Flash when the Traction Control System is limiting wheel spin.
- Flash when the StabiliTrak/Electronic Stability Control system is activated.
- Turn on and stay on when either system is not working.

See *Traction Control System (TCS)/Electronic Stability Control Light ⇨ 125*.

If either system fails to turn on or to activate, a message displays in the Driver Information Center. The vehicle is safe to drive, but adjust driving accordingly.

If turns on and stays on:

1. Stop the vehicle.

NOT FOR RESALE

2. Turn the vehicle off and wait 15 seconds.
3. Start the vehicle.
4. Drive the vehicle.

If stays on, the vehicle may need more time to diagnose the problem. If the condition persists, see your dealer.

Turning the Systems Off and On

Caution
Do not repeatedly brake or accelerate heavily when the Traction Control System is off. The vehicle driveline could be damaged.

To turn the Traction Control System on and off, in the controls app on the infotainment screen, select Controls > Drive & Park. The following options appear under Traction Control and Electronic Stability Control (ESC):

- On
- Traction Control Off
- Off

If equipped, while in Baja mode, an additional option, ESC Reduced, may also appear. See *Driver Mode Control* ⇨ *234*.

The Traction Off light displays in the instrument cluster when the Traction Control System is turned off. When the Traction Control System is turned back on, the Traction Off light displayed in the instrument cluster will turn off. See *Traction Off Light* ⇨ *125*.

If the traction system is actively limiting wheel spin when disabled, the system will not turn off until the wheels stop spinning.

The StabiliTrak/Electronic Stability Control Off light will display in the instrument cluster when StabiliTrak/Electronic Stability is turned off. See *Electronic Stability Control (ESC) Off Light* ⇨ *126*.

The Traction Control System cannot be engaged when the StabiliTrak/Electronic Stability Control system is off.

The StabiliTrak/Electronic Stability Control system automatically engages if the vehicle exceeds 56 km/h (35 mph) and cannot be turned off again until speed is reduced. The Traction Control System will remain off.

Entering Teen Driver will automatically enable both the Traction Control System and StabiliTrak/Electronic Stability Control system and prevent these safety features from being turned off. See *Teen Driver* ⇨ *174*.

Adding accessories can affect the vehicle performance. See *Accessories and Modifications* ⇨ *321*.

Hill Descent Control (HDC)

If equipped, Hill Descent Control maintains vehicle speed while descending steep grades in a forward or reverse gear.

Hill Descent Control can be enabled or disabled on the infotainment screen. Select Controls > Drive & Park > Hill Descent Control to toggle the system off and on.

- The vehicle speed must be below 50 km/h (31 mph).
- The initial speed is set to the current driving speed. To increase or decrease the speed, press +RES or –SET on the steering wheel or apply the accelerator or brake pedal. This adjusted speed becomes the new set speed.

NOT FOR RESALE

- Hill Descent Control can maintain vehicle speed from 30 km/h (19 mph) down to about 1 km/h (1 mph) on grades greater than or equal to about 10%.
- Hill Descent Control will remain enabled between 30 and 60 km/h (19 and 37 mph); however vehicle speed cannot be set or maintained in this range and a message will display in the Driver Information Center.
- Hill Descent Control will automatically disable if the vehicle speed is above 80 km/h (50 mph) or above 60 km/h (37 mph) for at least 30 seconds. Re-enable the system on the infotainment screen.
- If Hill Descent Control is to be used for more than three minutes or on grades steeper than 25%, the transfer case should be put into Four-Wheel Drive Low (4↓), if equipped, to reduce the possibility of brake overheating.

The Hill Descent Control light displays on the instrument cluster when the system is enabled. A blinking light indicates the system is actively applying the brakes to maintain vehicle speed. See *Hill Descent Control Light* ⇨ *124*.

Noise from the Electronic Brake Control Module is normal when Hill Descent Control is active.

Hill Descent Control may disable after an extended period of use. If this happens, Hill Descent Control will require time to cool down. The length of time Hill Descent Control remains active depends on road conditions, grade, set speed, vehicle loading, and outside temperature.

Driver Mode Control

Driver Mode Control allows the driver to adjust the overall driving experience by selecting different modes.

Driver Mode Control may include the following modes, if equipped: Normal, Sport, Snow/Ice, Off-Road, Tow/Haul, Terrain, Baja, and one customizable mode: My Mode. These modes adjust multiple systems to fit specific the driving needs. Driver mode availability and affected vehicle subsystems are dependent upon trim level, region, and optional features.

If the vehicle is in any other mode, except My Mode, it will return to Normal mode when you restart the vehicle. When you select a mode, an indicator will come on in the instrument cluster and stay on. See *Driver Mode Control Light* ⇨ *127*.

Mode Activation

To activate each mode, press the MODE button on the center stack to cycle through the available options, or open the Drive Modes app on the infotainment app screen and select the mode by name.

Mode Descriptions

Normal Mode

Use for normal city and highway driving to provide a smooth ride. This setting provides balance between comfort and handling.

Sport Mode

Use where road conditions or personal preference demand a more controlled response. Sport mode improves vehicle handling and acceleration on dry pavement.

Sport mode modifies steering effort, pedal tuning, Electric Vehicle Sound Enhancement, transmission shift points, exhaust valve tuning, and suspension tuning, if equipped.

Dynamic Performance Mode: While in Sport Mode, this feature allows the transmission to hold the current gear after a quick release of a heavily applied accelerator pedal. This provides greater engine braking and enhanced

NOT FOR RESALE

vehicle control. When Dynamic Performance mode is active, displays in the instrument cluster next to the driver mode control indicator icon.

Snow/Ice Mode

Use on snow covered roads to improve vehicle acceleration. Snow/Ice mode adjusts pedal tuning to optimize traction on slippery surfaces. This can compromise the acceleration on dry asphalt.

This feature is not intended for use when the vehicle is stuck in sand, mud, ice, snow, or gravel. If the vehicle becomes stuck, see *If the Vehicle Is Stuck* ⇨ *200*.

Off Road Mode

Use for off-road recreational driving. Off Road mode should be used to improve driving at moderate speeds, on grass, gravel, dirt, unpaved roads, or snow-covered roads.

The accelerator pedal is tuned for off road use. If equipped, this mode also modifies transmission shift points, exhaust valve tuning, Electric Vehicle Sound Enhancement, Automatic Brake System (ABS), StabiliTrak/ Electronic Stability Control, and Traction Control System performance.

Off-Road mode optimizes Automatic Brake System (ABS) performance to decrease stopping distances for shifting or loose surfaces.

For more information on off-road driving, including important warnings and precautions, see *Off-Road Driving* ⇨ *193*.

Tow/Haul Mode

Use when hauling heavy loads to provide increased performance and vehicle control. This mode assists in maintaining desired vehicle speeds when driving on downhill grades by using the engine and transmission.

Tow/Haul mode adjusts the transmission shift points, steering effort, and Trailer Sway Control performance

If the vehicle is turned off with Tow/Haul mode active and then restarted within four hours or less, Tow/Haul mode will remain active. Otherwise, the vehicle will start in Normal mode.

For more information on Tow/Haul mode, see *General Towing Information* ⇨ *316*.

Baja Mode (AT4x only)

Use for off-road recreational driving at higher speeds. This mode is not designed for on-road usage. Hard packed sand, dirt, and gravel are examples of surfaces that may support higher speed driving. Baja mode can be activated in all transfer case states.

Baja mode adjusts the steering, pedal map, Four-Wheel Drive Auto, transmission shift points, exhaust valve tuning, Automatic Brake System (ABS), StabiliTrak/Electronic Stability Control system, and Traction Control System performance in order to maximize response at higher vehicle speeds. If enabled, the rear lockers will remain locked at all speeds.

Baja mode optimizes Automatic Brake System (ABS) performance to decrease stopping distances for loose surfaces.

When entering Baja mode, a pop-up appears on the center infotainment screen to confirm that Baja mode can modify StabiliTrak/Electronic Stability Control system. When you select "Reduce ESC," Baja mode remains active and reduces StabiliTrak/Electronic Stability Control system for optimal drive mode performance. When you select "Don't Reduce ESC" or nothing

NOT FOR RESALE

is chosen, the vehicle remains in Baja mode, but StabiliTrak/Electronic Stability Control system will not change.

While in Baja mode, ESC Reduced is available as an option for the StabiliTrak/Electronic Stability Control system in the controls app. See *Traction Control/Electronic Stability Control* ⇨ *232*.

For more information on off-road driving, including important warnings and precautions, see *Off-Road Driving* ⇨ *193*.

Dynamic Performance Mode : If equipped with Baja mode, this feature allows the transmission to hold the current gear after a quick release of a heavily applied accelerator pedal. This provides greater engine braking and enhanced vehicle control. Dynamic Performance mode recognizes aggressive accelerator pedal rates, heavy braking, and high acceleration to select and hold lower gears longer. When Dynamic Performance mode is active, displays in the instrument cluster next to the driver mode control indicator icon.

Terrain Mode

Use when traveling on very rough roads at very low speeds, such as a two-track or heavily rutted road. This mode can also be used for pulling a boat out of the water on a trailer. When in Terrain mode, the vehicle shifts automatically, but will hold a lower gear longer to maximize engine torque. This mode has a unique pedal map and transmission shift pattern for better control at lower speeds and over rough terrain.

This mode modifies accelerator pedal mapping, transmission shift pattern, and traction control system.

Terrain mode automatically exits to Normal mode if the brake temperatures become too hot, electronic parking brake becomes inoperable, or the vehicle cannot perform braking or vehicle hold.

For more information on off-road driving, including important warnings and precautions, see *Off-Road Driving* ⇨ *193* and *Hill and Mountain Roads* ⇨ *198*.

Active Braking: While in Terrain mode and during lift throttle, this feature automatically applies light braking to simulate heavy engine braking of four-wheel-drive low. It also applies light braking in D (Drive) until the vehicle is at idle speeds. In L1 and L2 light braking will typically bring the vehicle to a stop. Active Braking during lift throttle also reduces trailer braking.

NOT FOR RESALE

Terrain Mode Drive Select	Expected Vehicle Behavior	Ideal Terrain
Drive (L3-Lx)	Minor deceleration when off throttle and mild ability to modulate throttle; mimics performance of 4↓ without torque multiplication.	Grassy fields, mild two tracks, rutted roads, large rolling hills
L2	Moderate deceleration when off throttle and moderate ability to modulate throttle; brings vehicle to a stop in most cases.	Mild rock crawling, heavy ruts, short, steeper grades
L1	Significant deceleration when off throttle and significant ability to modulate throttle; brings vehicle to a stop in most cases.	Rock crawling downhill

Vehicle Hold Features

- When the vehicle comes to a stop on an incline grade in forward gear or on a decline grade in reverse gear, Vehicle Hold engages until you press the accelerator pedal.
- When the vehicle is in forward gear on a decline, the vehicle will creep down the hill when you press the brake pedal without pressing the accelerator pedal. The vehicle will also creep forward on flat ground.
- If the you remove the driver seat belt and open the driver door while the vehicle is being held, the electric parking brake engages.
- If the vehicle is held for an extended period, the electric parking brake engages.

Terrain mode can only be active when:

- Vehicle speed is less than 80 km/h (50 mph).
- The transfer case is in 4↑ or 4↓.

Frequent use of this mode may cause brake wear due to the light braking.

The vehicle automatically exits the mode if the brakes get too hot. Terrain mode can be turned back on after the brakes have cooled.

My Mode

Use to personalize everyday driving. This mode allows the driver to configure the vehicle subsystem settings to their driving preferences. My Mode remains active across on/off cycles.

Through the infotainment screen, the following vehicle subsystems may be available for customization in this mode:

Engine Sound: Normal, Sport, Baja

Steering Effort: Normal, Sport

Suspension Firmness : Normal, Sport

NOT FOR RESALE

Drive Mode Customization

You can modify the following settings based on vehicle content. Through the infotainment home screen, select Settings > Vehicle > Drive Mode Customization to personalize My Mode. These settings retain over each on/off cycle, and you do not have to reset them each time you start the vehicle.

Engine Sound: Set the engine sound to be quieter or louder.

Steering Effort: Set the steering wheel to provide more feedback, which requires more steering effort.

Suspension Firmness: Set the suspension to feel stiffer or more comfortable.

Locking Rear Axle

Caution

If you try to lock the axle while the vehicle is stuck and the tires are spinning, the vehicle's drivetrain could be damaged. The repairs would not be covered by the vehicle warranty. Always lock the axle before

(Continued)

Caution (Continued)

attempting situations and/or navigating terrain that could cause the vehicle to become stuck.

Caution

If the vehicle's axle is locked while driving on pavement, the drivetrain could be damaged. Repairs would not be covered by the vehicle warranty. Do not use the locking axle on pavement.

If equipped, the locking rear axle can give the vehicle additional traction from the rear wheels when traveling in off-road situations such as mud, snow, steep hills, and uneven terrain.

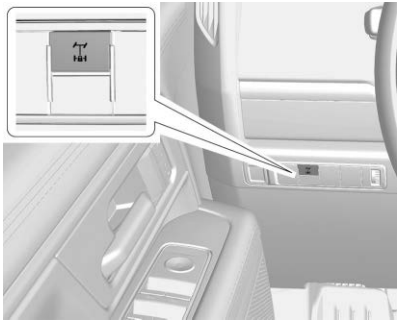

Before the front axle can be locked, the rear axle must be locked and the transfer case must be in 4↓.

To lock the rear axle:

1. Press the rear axle locking switch with the vehicle moving less than 30 km/h (20 mph).
2. Wait for the light in the switch to stop flashing and remain illuminated to show that the rear axle is locked.

   If the electronic locking differential has difficulty engaging, release the accelerator pedal.

The locking rear axle will be disengaged when the vehicle speed exceeds 30 km/h (20 mph).

NOT FOR RESALE

If equipped, Off-Road mode allows the axle lock to remain engaged at higher vehicle speeds.

After pressing the switch to unlock the axle, it may remain locked due to torque in the driveline. To quickly unlock the axle, turn the steering wheel to the right and to the left while traveling at a low speed.

Locking Front Axle

⚠ Warning

Driving on pavement with a locked front axle may cause reduction to or complete loss of steering assist, which could result in serious injury, death, or property damage. Do not use the locking front axle on pavement.

Caution

If you try to lock the axle while the vehicle is stuck and the tires are spinning, the vehicle's drivetrain could be damaged. The repairs would not be covered by the vehicle warranty. Always lock the axle before

(Continued)

Caution (Continued)

attempting situations and/or navigating terrain that could cause the vehicle to become stuck.

Caution

If the vehicle's axle is locked while driving on pavement, the drivetrain could be damaged. Repairs would not be covered by the vehicle warranty. Do not use the locking axle on pavement.

If equipped, the locking front axle can give the vehicle additional traction when traveling in off-road situations such as mud, snow, steep hills, and uneven terrain.

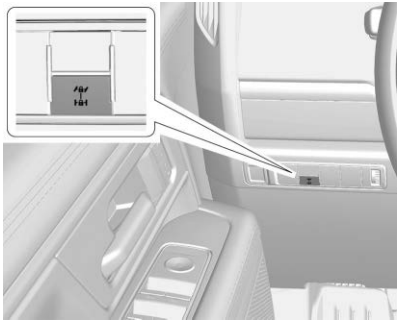

Before the front axle can be locked, the transfer case must be in 4↓.

The front axle cannot be locked independently of the rear axle.

To lock the front and rear axles:

1. Place the transfer case in 4↓. This is the only mode that allows the front axle to lock. See *Four-Wheel Drive* ⇨ *226* for more information regarding the transfer case and four-wheel drive low operation.
2. Press the front/rear axle locking switch with the vehicle stopped.
3. Wait for the light in the switch to stop flashing and remain illuminated to show that the front axle is locked. Engagement of

NOT FOR RESALE

the front axle lock will disable the Antilock Brake System (ABS) and illuminate the Antilock Brake System (ABS) warning light. The wheels may lock up in this condition when decelerating from either applying the brake pedal or automatic braking in Terrain Mode. See *Driver Mode Control* ⇨ *234*. If this occurs, press the accelerator pedal to unlock the wheels. Hill Descent Control will also be disabled when the front axle lock is engaged.

If the electronic locking differential has difficulty engaging, release the accelerator pedal.

The locking front axle will be disengaged when the vehicle speed exceeds 30 km/h (20 mph) or the transfer case is shifted out of 4↓.

Antilock Brake System (ABS) will be automatically enabled and the Antilock Brake System (ABS) warning light will turn off when the locking front axle is disengaged.

Do not lock the front axle while in Terrain Mode when driving on slippery roads. If the front axle is locked while in Terrain mode, the Antilock Brake System (ABS) warning light appears indicating that Antilock Brake System (ABS) is off, which may result in the wheels locking during deceleration. See *Driver Mode Control* ⇨ *234*.

If Hill Descent Control was enabled prior to axle lock, it will be automatically enabled when the locking front axle is disengaged.

After pressing the switch to unlock the axle, it may remain locked due to torque in the driveline. The axle is more easily unlocked by turning the steering wheel to the right and to the left while traveling at a low speed.

Cruise Control

Adaptive Cruise Control (Advanced)

If equipped, Adaptive Cruise Control allows the cruise control set speed and following gap to be selected. Read this entire section before using this system. The following gap is the following time between your vehicle and a vehicle detected directly ahead in your path, moving in the same direction. If no vehicle is detected in your path, Adaptive Cruise Control works like regular cruise control. Adaptive Cruise Control uses a windshield mounted front camera and front -mounter radar sensors.

If a vehicle is detected in your path, Adaptive Cruise Control can apply acceleration or limited, moderate braking to maintain the selected following gap. To deactivate Adaptive Cruise Control, apply the brake. If Adaptive Cruise Control is controlling the vehicle speed when the Traction Control System or StabiliTrak/Electronic Stability Control system activates, Adaptive Cruise Control may automatically deactivate. See *Traction Control/Electronic Stability Control* ⇨ *232*. When road conditions allow Adaptive Cruise Control to be safely used, Adaptive Cruise Control can be turned back on. Disabling the Traction Control System or StabiliTrak/Electronic Stability Control system will deactivate and prevent the activation of Adaptive Cruise Control.

Adaptive Cruise Control can reduce the need for you to frequently brake and accelerate, especially when used on expressways, freeways, and interstate highways. When used on other roads, you may need to take over the control of braking or acceleration more often.

NOT FOR RESALE

⚠ Warning

ACC has limited braking ability and may not have time to slow the vehicle down enough to avoid a collision with another vehicle you are following. This can occur when vehicles suddenly slow or stop ahead, or enter your lane. Also see "Alerting the Driver" later in this section. Complete attention is always required while driving and you should be ready to take action and apply the brakes. See *Defensive Driving* ⇨ *190*.

⚠ Warning

ACC will not detect or brake for children, pedestrians, animals, or other objects.

Do not use ACC when:

- On winding and hilly roads or when the sensors are blocked by snow, ice, or dirt. The system may not detect a vehicle ahead. Keep the entire front of the vehicle clean.

(Continued)

Warning (Continued)

- Visibility is poor due to rain, snow, fog, dirt, insect residue, or dust; when other foreign objects obscure the camera and/or radar; or when the vehicle in front or oncoming traffic causes additional environmental obstructions, such as road spray. ACC performance is limited under these conditions.
- On slippery roads where fast changes in tire traction can cause excessive wheel slip.
- With extremely heavy cargo loaded in the cargo area or rear seat, or when the vehicle is loaded in excess of load limits. See *Vehicle Load Limits* ⇨ *201*.



: Press briefly to activate Adaptive Cruise Control at the current vehicle speed.

RES+: Press briefly to resume the previous set speed, if one currently exists, or to increase vehicle speed if Adaptive Cruise Control is already activated. To increase speed by about 1 km/h (1 mph), press RES+ briefly. To increase speed to the next 5 km/h (5 mph) mark on the speedometer, hold RES+.

SET–: Press briefly to acticate Adaptive Cruise Control at the current vehicle speed, or to decrease vehicle speed if Adaptive Cruise Control is already activated. To decrease speed by about 1 km/h (1 mph), press SET– briefly. To decrease speed to the next 5 km/h (5 mph) mark on the speedometer, hold –SET.

NOT FOR RESALE

: Press to deactivate Adaptive Cruise Control.

: Press to select a following gap setting for Adaptive Cruise Control of Far, Medium, or Near.

The speedometer reading can be displayed in either English or metric units. See *Instrument Cluster* ⇨ *112*. The increment value used depends on the units displayed.

Switching Between Adaptive Cruise Control and Regular Cruise Control

⚠ Warning

Always check the cruise control indicator on the instrument cluster to determine which mode cruise control is in before using the feature. If ACC is not active, the vehicle will not automatically brake for other vehicles, which could cause a crash if the brakes are not applied manually. You and others could be seriously injured or killed.

To switch between Adaptive Cruise Control and regular cruise control, press and hold or until a message is displayed in the instrument cluster. See *Vehicle Messages* ⇨ *135*.



Adaptive Cruise Control Indicator



Regular Cruise Control Indicator

When Adaptive Cruise Control is active, a green indicator will appear in the instrument cluster, or if equipped, the Head-Up Display, and the following gap will display. When the regular cruise control is active, a green indicator will appear in the instrument cluster and the following gap will not display.

It is recommended only to switch from Adaptive Cruise Control to Regular Cruise Control when there are no vehicles ahead of you.

When the vehicle is turned on, the cruise control mode will be set to the last mode used before the vehicle was turned off.

Setting Adaptive Cruise Control

Select the set speed desired for Adaptive Cruise Control. This is the speed the vehicle will travel when no vehicle is detected in your path.

While the vehicle is moving, Adaptive Cruise Control will not set at a speed below a minimum speed, although it can be resumed. Adaptive Cruise Control can be set while the vehicle is at a complete stop or while the vehicle is traveling greater than 5 km/h (3 mph), to a minimum set speed of 25 km/h (15mph).

To set Adaptive Cruise Control while moving:

1. Drive at the desired speed.
2. Press and release SET–or .
3. Remove your foot from the accelerator pedal.

After Adaptive Cruise Control is set, it may immediately apply the brakes if a vehicle ahead is detected closer than the selected following gap.

NOT FOR RESALE

Adaptive Cruise Control can also be set while the vehicle is stopped if Adaptive Cruise Control is on and the brake pedal is applied.

Be mindful of speed limits, surrounding traffic speeds, and weather conditions when selecting the set speed.

Resuming a Set Speed

If Adaptive Cruise Control is set at a desired speed and then the system is deactivated by the driver, that speed will be retained until the vehicle is turned off.

To resume using Adaptive Cruise Control at the retained speed, press RES+ up briefly.

- If the vehicle is moving more than 5 km/h (3 mph), it resumes the previous set speed.
- If the vehicle is stopped with the brake pedal applied, press RES+ and release the brake pedal. Adaptive Cruise Control will hold the vehicle until RES+ or the accelerator pedal is pressed.

A green indicator and the set speed will display on the instrument cluster. The vehicle ahead indicator may be flashing if a vehicle ahead was present and moved. See "Approaching and Following a Vehicle" later in this section.

Once Adaptive Cruise Control has resumed, the vehicle speed will increase to the set speed under any of the following conditions:

- There is no vehicle ahead.
- The vehicle ahead is beyond the selected following gap.
- The vehicle speed is not being limited because of a sharp turn.

Increasing Speed While Adaptive Cruise Control Is at a Set Speed

If Adaptive Cruise Control is already activated, do one of the following:

- Use the accelerator to get to the higher speed. Press SET–. Release SET– and the accelerator pedal. The vehicle will now cruise at the higher speed.

  When the accelerator pedal is pressed, Adaptive Cruise Control will not brake because it is overridden. The Adaptive Cruise Control indicator will turn white on the instrument cluster and Head-Up Display, if equipped.
- Press and hold RES+ until the desired set speed is displayed, then release it.
- To increase vehicle speed in smaller increments, press RES+ briefly. For each press, the vehicle goes about 1 km/h (1 mph) faster.
- To increase vehicle speed in larger increments, hold RES+. While holding RES+, the vehicle speed increases to the next 5 km/h (5 mph) mark, then continues to increase by 5 km/h (5 mph) at a time.

The set speed can also be increased while the vehicle is stopped.

- If stopped with the brake pedal applied, press RES+ until the desired set speed is displayed.
- If Adaptive Cruise Control is holding the vehicle at a stop and there is another vehicle directly ahead, pressing RES+ will increase the set speed.
- Pressing RES+ when there is no longer a vehicle ahead or the vehicle ahead is pulling away and the brake is not applied will cause Adaptive Cruise Control to resume.

When it is determined that there is no vehicle ahead or the vehicle ahead is beyond the selected following gap, then the vehicle speed will increase to the set speed.

NOT FOR RESALE

Reducing Speed While Adaptive Cruise Control Is at a Set Speed

If Adaptive Cruise Control is already activated, do one of the following:

- Use the brake to get to the desired lower speed. Release the brake and press SET–. The vehicle will now cruise at the lower speed.
- Press and hold SET– until the desired lower speed is reached, then release it.
- To decrease the vehicle speed in smaller increments, press SET– briefly. For each press, the vehicle goes about 1 km/h (1 mph) slower.
- To decrease the vehicle speed in larger increments, hold SET–. While holding SET–, the vehicle speed decreases to the next 5 km/h (5 mph) mark, then continues to decrease by 5 km/h (5 mph) at a time.

The set speed can also be decreased while the vehicle is stopped.

- If stopped with the brake applied, press or hold SET– until the desired set speed is displayed.

Selecting the Follow Distance Gap

When a slower moving vehicle is detected ahead within the selected following gap, Adaptive Cruise Control will adjust the vehicle's speed and attempt to maintain the follow distance gap selected.

Press on the steering wheel to adjust the following gap. Each press cycles the gap button through three settings: Far, Medium, or Near.

When pressed, the current gap setting displays briefly on the instrument cluster and Head-Up Display, if equipped. The gap setting will be maintained until it is changed.



Far Gap Setting

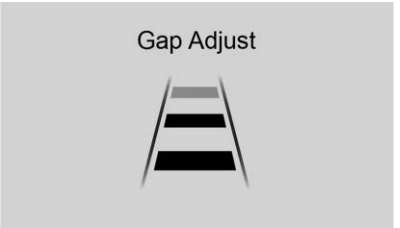

Medium Gap Setting

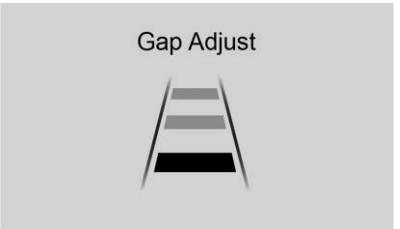

Near Gap Setting

If equipped, and a trailer is electrically connected, the gap setting display will be as follows:

NOT FOR RESALE

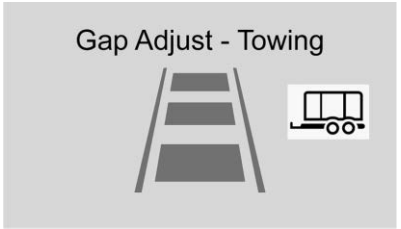

Far Gap Setting with Trailer

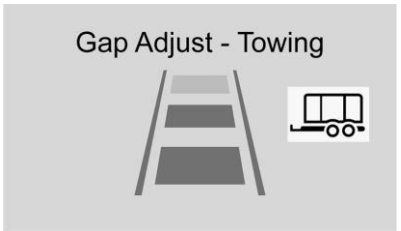

Medium Gap Setting with Trailer

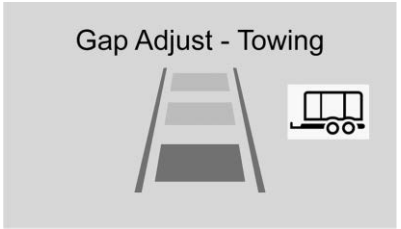

Near Gap Setting with Trailer

Since each gap setting corresponds to a following time (Far, Medium, or Near), the following distance will vary based on vehicle speed. The faster the vehicle speed, the further back your vehicle will follow a vehicle detected ahead. Consider traffic and weather conditions when selecting the following gap. The range of selectable gaps may not be appropriate for all drivers and driving conditions.

Changing the gap setting automatically changes the alert timing sensitivity (Far, Medium, or Near) for the Forward Collision Alert (FCA) feature. See *Forward Collision Alert (FCA) System* ⇨ *287*.

Courtesy Gap

Press and hold on the steering wheel when vehicle is moving to temporarily increase the gap with the vehicle ahead to allow for merging traffic.

Press and hold when stopped to cancel Adaptive Cruise Control from resuming automatically (if the stop is brief) and remain stationary. This can be used to allow traffic to merge between you and the vehicle ahead. Press RES+ or the accelerator pedal to resume Adaptive Cruise Control.

Following distance gap will return to the original selection after hold.

Alerting the Driver

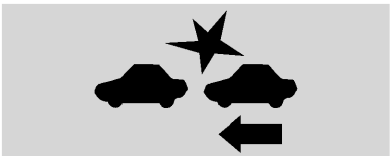

With Head-Up Display

NOT FOR RESALE

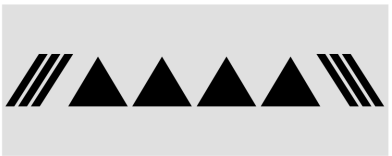

Without Head-Up Display

If Adaptive Cruise Control is active, driver action may be required when Adaptive Cruise Control cannot apply sufficient braking because of approaching a vehicle too rapidly.

When this condition occurs, the collision alert symbol will flash on the windshield. Either audible alerts will sound from the front, or both sides of the Safety Alert Seat, if equipped, will pulse times. To view available settings from the infotainment screen, touch Settings > Vehicle > Collision/Detection Systems.

See *Defensive Driving* ⇨ *190*.

Approaching and Following a Vehicle



The vehicle ahead indicator is in the instrument cluster and Head—Up Display (if equipped). It only displays when a vehicle is detected in your vehicle's path moving in the same direction. If this symbol is not displaying, Adaptive Cruise Control will not respond to or brake for vehicles ahead.

Adaptive Cruise Control automatically slows the vehicle down and adjusts vehicle speed to maintain a following gap with a detected vehicle ahead at the selected setting. The vehicle speed increases or decreases to maintain a following gap with a detected vehicle in front of your vehicle when that vehicle is traveling slower than your vehicle set speed. It may apply limited braking, if necessary. When braking is active, the brake lights will come on. The automatic braking may feel or sound different than if the brakes were applied manually. This is normal.

Passing a Vehicle While Using Adaptive Cruise Control

If the set speed is high enough, and the left turn signal is used to pass a vehicle ahead in the selected following gap, Adaptive Cruise Control may assist by gradually accelerating the vehicle prior to the lane change.

⚠ Warning

When using ACC to pass a vehicle or perform a lane change, the following distance to the vehicle being passed may be reduced. ACC may not apply sufficient acceleration or braking when passing a vehicle or performing a lane change. Always be ready to manually accelerate or brake to complete the pass or lane change.

Stationary or Very Slow-Moving Objects

⚠ Warning

ACC may not detect and react to stopped or slow-moving vehicles ahead of you. For example, the system may not brake for a vehicle it has never detected moving. This can occur in stop-and-go traffic or when a vehicle suddenly appears due to a vehicle ahead changing lanes. Your vehicle may not stop and could cause a crash. Use caution when using ACC. Your complete attention is always required while driving and you should be ready to take action and apply the brakes.

NOT FOR RESALE

Irregular Objects Affecting Adaptive Cruise Control

Adaptive Cruise Control may have difficulty detecting the following objects:

- Vehicles in front of your vehicle that have a rear aspect that is low, small, or irregular
- An empty truck or trailer that has no cargo in the cargo bed
- Vehicles with cargo extending from the back end
- Non-standard shaped vehicles, such as vehicle transport, vehicles with a side car fitted, or horse carriages
- Vehicles that are low to the road surface
- Objects that are close to the front of your vehicle
- Vehicles on which extremely heavy cargo is loaded in the cargo area or rear seat

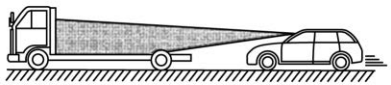

Adaptive Cruise Control Automatically Deactivates

Adaptive Cruise Control may automatically deactivate and the driver will need to manually apply the brakes to slow the vehicle if:

- The sensors are blocked.
- The Traction Control System or StabiliTrak/ Electronic Stability Control system has activated or been disabled.
- There is a fault in the system.
- The radar falsely reports blockage when driving in a desert or remote area with no other vehicles or roadside objects.
- A Driver Information Center message displays to indicate that Adaptive Cruise Control is temporarily unavailable.

The indicator will turn dissapear when Adaptive Cruise Control is no longer active.

In some cases, when Adaptive Cruise Control is temporarily unavailable, regular cruise control may be used. See "Switching Between Adaptive Cruise Control and Regular Cruise Control" previously in this section. Always consider driving conditions before using either cruise control system.

Notification to Resume Adaptive Cruise Control

Adaptive Cruise Control will maintain a follow gap behind a detected vehicle and slow your vehicle to a stop behind that vehicle.

If the stopped vehicle ahead has driven away and Adaptive Cruise Control has not resumed, the vehicle ahead indicator will flash as a reminder to check traffic ahead before proceeding. In addition, the left and right sides of the Safety Alert Seat (if equipped) will pulse three times, or three audible alerts will sound. To view available settings from the infotainment screen, touch Settings > Vehicle > Collision/Detection Systems > Alert Type > Adaptive Cruise Go Notifier.

If equipped with Driver Attention System (DAS) located on top of the steering column, when the vehicle ahead drives away, and DAS determines

NOT FOR RESALE

if the driver's attention is on the road ahead, Adaptive Cruise Control resumes automatically. See “Attention to the Road” under *Super Cruise* ⇨ *263*. If necessary, press RES+ or the accelerator pedal to resume Adaptive Cruise Control. If stopped for more than two minutes or if the driver door is opened and the driver seat belt is unbuckled, the Adaptive Cruise Control automatically applies the Electric Parking Brake (EPB) to hold the vehicle. The EPB status light will turn on. See *Electric Parking Brake* ⇨ *229*. To release the EPB, press the accelerator pedal.

A Driver Information Center warning message may display indicating to shift to P (Park) before exiting the vehicle. See *Vehicle Messages* ⇨ *135*.

⚠ Warning

If ACC has stopped the vehicle, and if ACC is disengaged, turned off, or canceled, the vehicle will no longer be held at a stop. The vehicle can move. When ACC is holding the vehicle at a stop, always be prepared to manually apply the brakes.

⚠ Warning

Leaving the vehicle without placing it in P (Park) can be dangerous. Do not leave the vehicle while it is being held at a stop by ACC. Always place the vehicle in P (Park) and turn off the ignition before leaving the vehicle.

Adaptive Cruise Control Override

If using the accelerator pedal while Adaptive Cruise Control is active, the Adaptive Cruise Control indicator turns white on the instrument cluster and in the Head-Up Display, if equipped, to indicate that automatic braking will not occur. Adaptive Cruise Control will resume operation when the accelerator pedal is not being pressed.

⚠ Warning

The ACC will not automatically apply the brakes if your foot is resting on the accelerator pedal. You could crash into a vehicle ahead of you.

Curves in the Road

⚠ Warning

On curves, ACC may not detect a vehicle ahead in your lane. You could be startled if the vehicle accelerates up to the set speed, especially when following a vehicle exiting or entering exit ramps. You could lose control of the vehicle or crash. Do not use ACC while driving on an entrance or exit ramp. Always be ready to use the brakes if necessary.

⚠ Warning

On curves, ACC may respond to a vehicle in another lane, or may not have time to react to a vehicle in your lane. You could crash into a vehicle ahead of you, or lose control of your vehicle. Give extra attention in curves and be ready to use the brakes if necessary. Select an appropriate speed while driving in curves.

Adaptive Cruise Control may operate differently in a sharp curve. It may reduce the vehicle speed if the curve is too sharp.

NOT FOR RESALE

If equipped, the curve speed control indicator may illuminate green when Adaptive Cruise Control is actively controlling the vehicle speed and detects a sharp curve on the road ahead.

Adaptive Cruise Control automatically slows the vehicle down while navigating the curve and may increase speed out of the curve, but will not exceed the set speed.

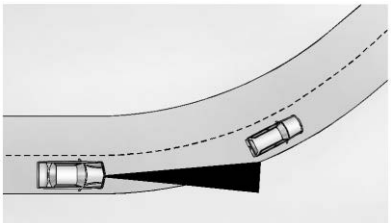

When following a vehicle and entering a curve, Adaptive Cruise Control may not detect the vehicle ahead and accelerate to the set speed. When this happens, the vehicle ahead indicator will not appear.

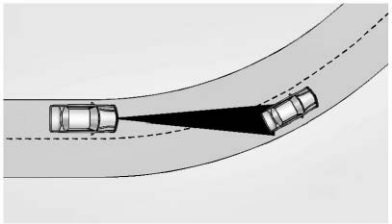

Adaptive Cruise Control may detect a vehicle that is not in your lane and apply the brakes.

Adaptive Cruise Control may occasionally provide an alert and/or braking that is considered unnecessary. It could respond to vehicles in different lanes or stationary objects when entering or exiting a curve. This is normal operation. The vehicle does not need service.

Other Vehicle Lane Changes

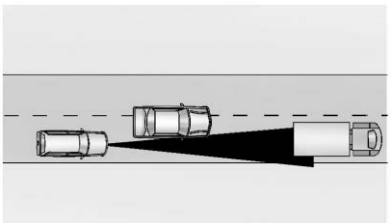

Adaptive Cruise Control will not detect a vehicle ahead until it is completely in the lane. The brakes may need to be manually applied.

Objects Not Directly in Front of Your Vehicle

The detection of objects in front of the vehicle may not be possible if:

- The vehicle or object ahead is not within your lane.
- The vehicle ahead is shifted, not centered, or is shifted to one side of the lane.

Driving in Narrow Lanes

Vehicles in adjacent traffic lanes or roadside objects may be incorrectly detected when located along the roadway.

Do Not Use Adaptive Cruise Control on Hills

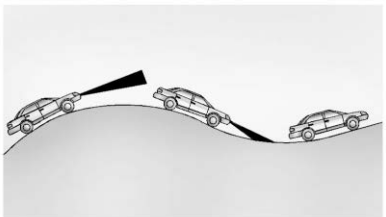

NOT FOR RESALE

Do not use Adaptive Cruise Control when driving on steep hills as Adaptive Cruise Control may not detect a vehicle ahead.

Towing with Adaptive Cruise Control

If equipped when towing a trailer, Adaptive Cruise Control driving characteristics such as following gap, acceleration rates and braking rates may be modified to provide a better towing experience.

When Adaptive Cruise Control is used with vehicles equipped with aftermarket trailer brake controller, deactivate Adaptive Cruise Control before applying the manual trailer brake. Adaptive Cruise Control will not automatically deactivate when manual trailer brake is applied.

Adaptive Cruise Control may be used when towing a trailer when trailer attached is within GM-approved allowable size and weight limits. See *General Towing Information* ⇨ *316*.

When towing a trailer with Adaptive Cruise Control, it is important to properly set the Trailer Gain. See *General Towing Information* ⇨ *316* for Trailer Gain Adjustment Procedure.

Use Tow/Haul mode when driving down steep hills or mountain grades, or when hauling heavy loads. See *Driver Mode Control* ⇨ *234*.

Adaptive Cruise Control maintains the set speed when driving uphill and downhill while towing a trailer. However, Adaptive Cruise Control may make a slight change to the cruise speed while driving on moderate hills if the combined vehicle and trailer weight is close to the maximum Gross Combined Weight Rating (GCWR). See *General Towing Information* ⇨ *316*. This is normal Adaptive Cruise Control operation and is necessary to maintain the set speed. Adaptive Cruise Control may deactivate if it detects that the brake temperature exceeds the normal range.

Deactivating Adaptive Cruise Control

There are three ways to deactivate Adaptive Cruise Control:

- Step lightly on the brake pedal.
- Press .
- Press .

Erasing Speed Memory

The Adaptive Cruise Control set speed is erased from memory if is pressed or if the ignition is turned off.

Auto Set Speed

⚠ Warning

When using Auto Set Speed with ACC, the auto set speed may not always be updated when the speed limit changes. The system also does not set the vehicle speed to speed limits shown with supplementary traffic signs, for example in construction zones. Always be attentive to your surroundings and adhere to posted speed limit signs.

If enabled, this feature uses detected road speed limits to assist setting the vehicle speed while Adaptive Cruise Control is active.

To view available settings from the infotainment screen, select Settings > Vehicle > Speed Assist > Adaptive Cruise Speed from Signs.

NOT FOR RESALE

An offset to the road speed limit may be selected in the settings menu. This offset is the difference between the set speed and the road speed limit. The selected offset will be applied at the next speed limit change.

Auto Set Speed will remain enabled or disabled until the setting is changed, even if the vehicle is turned off. This feature will not function when regular cruise control is the selected mode. It will also be disabled when Traffic Sign Assistant is disabled. See *Traffic Sign Assistant* ⇨ *298*.

Auto Set Speed can have two modes:

Ask First: A prompt will appear when the speed limit updates. Accept the new speed limit using the SET– button, or dismiss the prompt by pressing RES+.

Auto: The set speed will be updated automatically

When Adaptive Cruise Control is on and Auto Set Speed is enabled, the vehicle will:

- use the road speed limit to maintain a set vehicle speed.
- change Adaptive Cruise Control set speed to match the new road speed limit as well as any selected offset. Adaptive Cruise Control will never set below 25 km/h (15mph) regardless of detected road speed limit.

When Auto Set Speed is enabled, and speed limit information is available, pressing RES+ will activate Adaptive Cruise Control to the last known speed limit and apply any selected offset.

Increase or decrease Adaptive Cruise Control set speed at any time using the SET–or RES+ buttons.

Weather Conditions Affecting Adaptive Cruise Control

If the interior temperature is extremely high, the instrument cluster may indicate that Adaptive Cruise Control is temporarily unavailable. This can be caused by extreme hot weather conditions with direct sunlight on the front camera. Adaptive Cruise Control will return to normal operation once the cabin temperature is lower.

Conditions that are associated with low visibility, such as fog, rain, snow, or road spray, may limit Adaptive Cruise Control performance. Water droplets from rain or snow that remain on the windshield may also limit Adaptive Cruise Control's ability to detect objects.

System operation may be limited under snow, heavy rain, or road spray conditions.

⚠ Warning

Camera visibility may be limited and the ACC system may not work properly if the windshield is not clear. Do not use ACC if moisture is present on the inside of the windshield or the windshield washer is used in cold weather. Turn on the front defroster and make sure the windshield is clear before using ACC. Before driving, check that the windshield wipers are in good condition and replace them if worn.

Lighting Conditions Affecting Adaptive Cruise Control

The Adaptive Cruise Control front camera can be affected by poor lighting conditions, and Adaptive Cruise Control may have limited performance when:

- There are changes in brightness, such as entering and exiting tunnels, bridges, and overpasses.

NOT FOR RESALE

- Low sun angles cause the camera to not detect objects, or it is more difficult to detect objects in the same traffic lane.
- Lighting is poor in the evening or early morning
- There are multiple changes in brightness or shadows along the vehicle roadway.
- In a tunnel without the headlights on, or in a tunnel when there is a vehicle in front that does not have its taillights on.
- Subjected to strong light from opposing lane traffic in the front of the vehicle, such as high-beam headlights from oncoming traffic.

Accessory Installations and Vehicle Modifications

Do not install or place any object around the front camera windshield area that would obstruct the front camera view.

Do not install objects on top of the vehicle that overhang and obstruct the front camera, such as a canoe, kayak, or other items that can be transported on the vehicle roof.

Do not modify the hood, headlights, or fog lights, as this may limit the camera's ability to detect an object.

Cleaning the Sensing System

The camera sensor on the windshield behind the rearview mirror can become blocked by snow, ice, dirt, mud, or debris. This area needs to be cleaned for Adaptive Cruise Control to operate properly.

If equipped with Super Cruise, the radar sensors on the front of the vehicle can also become blocked by snow, ice, dirt, mud, or debris. These areas need to be cleaned for Adaptive Cruise Control to operate properly.

The vehicle headlights may need to be cleaned due to dirt, snow, or ice. Objects that are not illuminated correctly may be difficult to detect.

If Adaptive Cruise Control will not operate, regular cruise control may be available. See "Switching Between Adaptive Cruise Control and Regular Cruise Control" previously in this section. Always consider driving conditions before using either cruise control system.

For cleaning instructions, see "Washing the Vehicle" under *Exterior Care* ⇨ *400*.

Hands-On Steering Assist (Lane Centering Assistance (Mexico))

⚠ Warning

Hands-On Steering Assist is a hands-on driver assistance feature. When using this feature, you must always keep your hands on the steering wheel and always be prepared to take immediate action. Hands-On Steering Assist provides lane centering steering assistance only by helping to maintain vehicle position in the current lane under certain, compatible conditions. Hands-On Steering Assist can only be used when Adaptive Cruise Control is enabled and engaged. Hands-on Steering Assist is not a self-driving system, does not perform all aspects of driving, and cannot accurately detect or predict all situations. Hands-On Steering Assist is not a crash avoidance system. To prevent serious injury or death, you must always supervise the driving task and always monitor the road conditions, including when Hands-on Steering Assist is engaged.

(Continued)

NOT FOR RESALE

Warning (Continued)

Hands-On Steering Assist does:

- Not prevent crashes or warn of possible crashes.
- Not provide steering or steering assistance to avoid stopped or slow-moving vehicles, cross-traffic, construction barriers or cones, motorcycles, children, pedestrians, animals, or other objects on the road.
- Not steer or provide steering assistance in response to vehicles or objects next to your vehicle, including vehicles attempting to enter your lane.
- Not respond to traffic lights, stop signs, or other traffic control devices.
- Not respond to crossing traffic.
- Not make turns.
- Not steer to merge onto or to exit highways.
- Not steer to avoid, or steer through construction zones.
- Not respond to oncoming traffic.

(Continued)

Warning (Continued)

- Not function when lane markings are not detected or the vehicle is not centered in lane.

⚠ Warning

Failure to supervise the driving task and to respond appropriately, even while Hands-On Steering Assist is operating, can cause a crash. Hands-On Steering Assist may not respond as you would to all driving situations and may not maintain lane position under all conditions. It is extremely important to pay attention to the operation of the vehicle, even while using Hands-On Steering Assist. Do not use a hand-held device while driving, even with Hands-On Steering Assist engaged. To prevent serious injury or death:

- Always remain properly seated in the driver seat with your seat belt fastened.

(Continued)

Warning (Continued)

- Always make sure traffic conditions are safe before using Hands-On Steering Assist.
- Always keep the front sensors clean.
- Always observe posted speed limits.
- Only use Hands-On Steering Assist at or below the posted speed limit.

Hands-On Steering Assist should not be used in complex or uncertain driving conditions, including:

- Not when approaching or exiting toll plazas.
- Not when approaching an intersection that is controlled with a traffic light, stop sign, or other traffic control device.
- Not when lane markings are not present or cannot be detected. For example, there is too much glare, weather conditions are poor, or lanes are poorly marked.
- Not on slippery or icy roads.

(Continued)

NOT FOR RESALE

Warning (Continued)

- Not in adverse weather conditions, including rain, sleet, fog, ice, or snow.
- Not on winding or hilly roads.
- Not during heavy or emergency braking.
- Not when towing a trailer that does not meet GM approved guidelines.
- Not in a highway exit lane.

Hands-On Steering Assist can only help the driver maintain a lane-centered position. You may need to respond to traffic events by steering, braking, or accelerating. Hands-On Steering Assist cannot determine whether you are awake, asleep, impaired, or properly focused on safe driving. If you are not attentive with your hands on the wheel and eyes on the road, when Hands-On Steering Assist disengages, the vehicle could crash into other vehicles, drive out of the lane, or drive off the road. See *Defensive Driving* ⇨ *190*.

⚠ Warning

Hands-On Steering Assist may not detect lane markings while traveling on curved roads. If this occurs, the vehicle could drift out of your lane of travel when Hands-On Steering Assist is engaged. Hands-On Steering Assist may also abruptly disengage more often around sharp curves especially when towing a trailer. To prevent crashes, always pay attention to the road and always be prepared to take immediate action by firmly steering the vehicle.
You are always responsible for the safe operation of the vehicle, especially braking, steering, and controlling the speed and distance from other vehicles.

If equipped and enabled, Hands-On Steering Assist helps keep your vehicle centered in its lane using the front camera module to detect lane markings, steering wheel touch sensors to monitor hand placement, and the Driver Attention System to confirm your eyes are on the road.

Hands-On Steering Assist provides only steering assistance, it does not steer for you and requires you to keep your hands on the steering wheel at all times. When using this feature, the vehicle will maintain a set speed and following distance from a lead vehicle.

The Hands-On Steering Assist feature works with Adaptive Cruise Control. See *Adaptive Cruise Control (Advanced)* ⇨ *240*.

Hands-On Steering Assist differs from Lane Keep Assist, which offers limited steering correction only when a lane departure is detected, by providing continuous steering assistance when engaged. See *Lane Keep Assist (LKA)* ⇨ *301*.

To view available settings from the infotainment app screen, select Settings > Vehicle > Lane Centering Assistance.

Hands-On Steering Assist Requirements

Hands-On Steering Assist is designed to operate only when:

- Adaptive Cruise Control is engaged. See *Adaptive Cruise Control (Advanced)* ⇨ *240*.
- The system detects the driver's hands are on the steering wheel.
- The Driver Attention System detects the driver's head and eyes are directed toward the road ahead.

NOT FOR RESALE

- The driver's seat belt is buckled.
- The lane markings are clearly visible and detectable by the system.
- The outside temperature is not too cold (i.e., not below 15° F (-9° C)).
- The vehicle speed is less than approximately 85 mph (137 km/h).
- Teen Driver, if equipped, is not active.
- The camera and radar sensors are functioning and not covered, obstructed, or damaged.
- Adjustable Ride Height, if equipped, must be at Normal ride height.
- There are no other conditions preventing the system from working properly.

Hands-On Steering Assist Limitations

Hands-On Steering Assist cannot provide sufficient lane steering assistance to keep the vehicle centered in all driving conditions. It will not change lanes and does not provide automatic lane changing – it provides lane centering assistance only within your current lane of travel. If the feature is unable to provide sufficient lane centering assistance, it may disengage abruptly with little advanced warning.

This feature may not be able to provide sufficient lane centering assistance in the following conditions:

- The required steering effort to maintain lane centering exceeds the system limit – for example, when the curve in the road is too tight or the curvature of the road combined with your speed exceeds the feature's steering assist capabilities.
- Lane markings are not present or cannot be detected, or when lanes merge or split. For example, there is too much glare, weather conditions are poor, or lanes are poorly marked.
- The area you are driving in is under construction or roadwork is in progress.
- The front windshield camera and/or the front radar are blocked.

Operating Hands-On Steering Assist

1. Start the vehicle.
2. Enable Adaptive Cruise Control by pressing the Adaptive Cruise Control button on the steering wheel. The white Adaptive Cruise Control light displays in the instrument cluster.
3. Enable Hands-On Steering Assist by pressing the steering assist button on the steering wheel.
   - The white Hands-On Steering Assist light displays in the instrument cluster.

     Adaptive Cruise Control and Hands-On Steering Assist, will remain enabled the next time you start the vehicle.
4. Engage Adaptive Cruise Control by pressing the SET+/RES– button. The green Adaptive Cruise Control light displays with the set speed limit.

   Once Adaptive Cruise Control is engaged, when your vehicle is centered in the lane and detects lane markers, Hands-On Steering Assist begins providing lane centering assistance. When Hands-On

NOT FOR RESALE

Steering Assist is engaged, the white Hands-On Steering Assist light displays green.

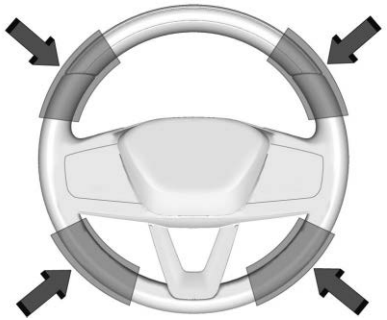

Steering Wheel Sensors

5. Hold the steering wheel firmly with both hands using the steering wheel sensor locations shown.

To adjust vehicle position within the lane, change lanes, turn, or maneuver around any object in your path, you must manually take control of the steering. Once you center the vehicle back in the lane, the feature will automatically reengage and actively provide hands-on lane centering steering assistance.

Manually Canceling Hands-On Steering Assist

Hands-On Steering Assist can be manually canceled by any of the following actions:

- Pressing the steering assist button on the steering wheel.
- Disengaging Adaptive Cruise Control by: stepping lightly on the brake pedal, pressing the Adaptive Cruise Control, or canceling the speed setting buttons on the steering wheel.
- Pressing the Regen On Demand paddle, if equipped.

Automatic Disengagement of Hands-On Steering Assist

Warning

Hands-On Steering Assist will not maintain the vehicle's speed while the Hands-On Steering Assist light is flashing red. If the Hands-On Steering Assist light flashes red, immediately take action by firmly steering the vehicle to prevent serious

(Continued)

Warning (Continued)

injury or death. If the feature is engaged, the green Hands-On Steering Assist light is illuminated, and you remove your hands from the steering wheel or eyes from the road, do not promptly return them, and ignore the alerts and messages, including the red flashing Hands-On Steering Assist light, the system will begin to apply the brakes and slowly bring your vehicle to a stop within the lane of travel and activate the hazard lights.

Disengagement Due to System Limitations

The system will automatically disengage when an external condition or system limitation exists, for example, no lane markers are detected or the curve in the road is too tight.

The system may disengage frequently and abruptly due to system limitations with little advance warning.

NOT FOR RESALE

Disengagement Due to Hands-Off or Eyes-Off

The system will automatically disengage when the steering wheel sensors detect your hands are not on the steering wheel and your head and eyes are not directed toward the road ahead.

Warnings Before Disengagement

Before the system disengages due to system limitations or because your hands are off the steering wheel or your eyes are not focused on the road, you will receive one or more of the warnings below depending on the circumstances prompting your immediate action:

- An alert message displays in the Driver Information Center
- The Hands-On Steering Assist lights may flash green or turn red
- Audible alerts sound
- The Safety Alert Seat vibrates, if equipped and enabled

When this happens, you must take immediate action by firmly steering the vehicle and ensure your eyes are on the road ahead. When the feature is engaged and no system limitations are present and your hands are off the steering wheel or eyes off the road, if you continue to ignore the alerts and fail to put your hands back on the steering wheel or eyes on the road, the system will begin to apply the brakes and slowly bring your vehicle to a stop within the lane of travel and activate the hazard lights.

Repeated misuse—hands off the steering wheel or eyes off the road – and disregard of these warnings may result in being locked out of the feature for a period of time. Repeated lockout events may delay the feature availability.

Caution

If you drive with your hand (or hands) on the top of the steering wheel, you may block the Driver Monitoring System camera, which is mounted on the top of the steering column. See *Defensive Driving* ⇨ *190*. If this camera is blocked, it cannot confirm that you have your eyes and attention on the road, and the system will alert you that it is disengaging if you do not put your eyes on the road. For the best experience with Hands-On Steering Assist, avoid holding the top center of the steering wheel to drive.

Hands-On Steering Assist will not provide steering assistance and will enter standby mode if a turn signal is active, if it detects that you are accelerating or braking quickly, or if you are intentionally steering across a lane marker.

When Adaptive Cruise Control is active and Hands-On Steering Assist is automatically disengaged, whether due to a system limitation or failure to keep hands on the steering wheel and eyes on the road, Hands-on Steering Assist remains in standby mode and will automatically reengage when the vehicle is again centered in the lane and the system detects lane markers.

How Adaptive Cruise Control and Hands-On Steering Assist Work Together

⚠ Warning

Taking your hands off the wheel can result in loss of control of the vehicle. Never take your hands off the wheel.

NOT FOR RESALE

Adaptive Cruise Control and Hands-On Steering Assist provide increasing levels of driver assistance as follows:

1. Adaptive Cruise Control
    - Maintains your speed and following distance
2. Hands-On Steering Assist
    - Adds lane centering and steering support

The system automatically engages the highest level of assistance available and appropriate based on the road and operating conditions. The level of assistance available and its status, whether enabled (in standby mode), engaged (active mode), or when disengaging, is displayed in the instrument cluster, and message alerts in the Driver Information Center. See "Driver Assistance Levels and Display Indicators in Increasing Order of Assistance" later in this section.

Trailer Towing With Hands-On Steering Assist

Hands-On Steering Assist may be used when towing a trailer when the attached trailer is within size and weight limits designated in the Trailer Towing section. See *General Towing Information* ⇨ *316*.

When Hands-On Steering Assist is used with vehicles equipped with an aftermarket trailer brake controller, disengage Hands-On Steering Assist before applying the manual trailer brake. Hands-On Steering Assist will not automatically disengage when manual trailer brake is applied.

Hands-On Steering Assist can recognize when the vehicle is pulling a trailer and adjusts the following gap for extra stopping distance.

NOT FOR RESALE

Hands-On Steering Assist Message Summary

Alert messages for this feature are displayed in the Driver Information Center. See *Instrument Cluster* ⇨ *112*. All alert messages refer to this feature as "Lane Centering Assistance".

Hands-on lane centering on but not active.	• Hands-On Steering Assist is enabled but not actively providing lane centering steering assistance. Hands-On Steering Assist has been temporarily overridden by the driver manually taking over steering control, for example, to manually change lanes.
Lane centering active. Keep hands on.	• Hands-On Steering Assist is actively providing steering assistance.
Take vehicle control.	• Hands-On Steering Assist is prompting you to take full manual control of steering immediately. If you fail to immediately resume full manual steering control, the system will disengage.
Lane centering assistance unavailable.	• Rain or snow is inhibiting the system's ability to see lane markers. • Direct sunlight is on the front camera. • There are missing or poor lane markings on the road. • There is sun glare on the road surface. • There is heavy rain, puddles, road spray, or inclement weather conditions that are affecting system performance. • Adaptive Cruise Control is not enabled.
Keep eyes on road while using lane centering.	• Alert for you to pay attention to the road.
Keep hands on for lane centering.	• Alert for you to keep hands on the steering wheel.

NOT FOR RESALE

Lane centering assistance locked out.	• You did not take control of the vehicle when prompted by the Hands-On Steering Assist system. The Hands-On Steering Assist system will be disabled until the vehicle is turned off and back on.
Lane centering unavailable. Can't see face.	• Sun is shining into the Driver Attention System camera. • Sun glare is on the driver's face. • Cups, food, hands, or other objects are obscuring the Driver Attention System view of the driver's face. • The steering column is pointed too high or low for the Driver Attention System to detect the driver. • Adjust the steering column or the seat if the message occurs frequently.

NOT FOR RESALE

Driver Assistance Levels and Display Indicators in Increasing Order of Assistance

Driver Assistance Feature	Instrument Cluster Light and Color	Steering Wheel Lightbar	Status of Driver Assistance Feature
Adaptive Cruise Control	 White	Off	Adaptive Cruise Control is enabled and in standby mode.
	 Green	Off	Adaptive Cruise Control is actively controlling your speed and maintaining an appropriate and preselected following distance with the lead vehicle.
	 Blue	Off	Adaptive Cruise Control was overridden and will not brake nor maintain following distance.

NOT FOR RESALE

Driver Assistance Feature	Instrument Cluster Light and Color	Steering Wheel Lightbar	Status of Driver Assistance Feature
Hands-On Steering Assist (Lane Centering)	 White	Off	Hands-On Steering Assist is enabled but not actively providing lane centering steering assistance.
	 Green	Off	Hands-On Steering Assist is actively providing lane centering steering assistance.
	 Flashing Green	Off	Hands-On Steering Assist has detected your hands are not on the steering wheel or you are not paying sufficiently close attention to the road.

NOT FOR RESALE

Driver Assistance Feature	Instrument Cluster Light and Color	Steering Wheel Lightbar	Status of Driver Assistance Feature
Hands-On Steering Assist (Lane Centering) (Continued)	 Red or Flashing Red	Off	Hands-On Steering Assist is prompting you to take full manual control of steering immediately. If you fail to immediately resume full manual steering control, the system will disengage.

System Care

Caution

The Hands-On Steering Assist system is a highly sophisticated system and should only be serviced by technicians with the proper training, tools, and safety instructions, which your dealer has. Without proper training and tools the vehicle may become damaged.

The Driver Attention System's camera on the steering column, which continually monitors the driver's head movements and eye gaze location to determine driver attentiveness, has a lens cover that may become dirty over time and affect camera performance. Clean the lens cover with a soft cloth sprayed with glass cleaner. Wipe the lens gently, then dry it. Never use abrasive cloths/cleaners or corrosive chemicals on the lens cover.

Super Cruise

⚠ Warning

Super Cruise does not perform all aspects of driving, nor does it do everything a driver can do. Super Cruise only steers to maintain

(Continued)

Warning (Continued)

vehicle position in the current lane or, under some circumstances, to change lanes. Super Cruise can only be used with Adaptive Cruise Control.

Super Cruise does:

- Not prevent crashes or warn of possible crashes.

(Continued)

NOT FOR RESALE

Warning (Continued)

- Not steer to avoid stopped or slow-moving vehicles, cross-traffic, construction barriers or cones, motorcycles, children, pedestrians, animals, or other objects on the road.
- Not steer in response to vehicles or objects next to your vehicle, including vehicles attempting to enter your lane.
- Not respond to traffic lights, stop signs, or other traffic control devices.
- Not respond to crossing traffic.
- Not make turns.
- Not steer to merge onto or to exit highways.
- Not steer to avoid, or steer through construction zones.
- Not function on surface streets.
- Not respond to oncoming traffic.
- Not function in city driving conditions.

⚠ Warning

Failure to supervise the driving task and to respond appropriately, even while Super Cruise is operating, can cause a crash. Super Cruise may not respond as you would to all driving situations and may not maintain lane position under all conditions.

It is extremely important to pay attention to the operation of the vehicle, even while using Super Cruise. Do not use a hand-held device while driving, even with Super Cruise engaged. To prevent serious injury or death:

- Always remain properly seated in the driver seat with your seat belt fastened.
- Never remove your hands from the steering wheel when Super Cruise is not operating.
- Always make sure traffic conditions are safe before using Super Cruise.
- Always keep the entire vehicle and the sensors clean. Sensors are on the front, sides, and rear of the vehicle.

(Continued)

Warning (Continued)

- Always observe posted speed limits. Only use Super Cruise at or below the posted speed limit.

Super Cruise should not be used in complex or uncertain driving conditions, including:

- Not in construction zones.
- Not when approaching or exiting toll plazas.
- Not when approaching an intersection that is controlled with a traffic light, stop sign, or other traffic control device.
- Not when lane markings are not present or cannot be detected. For example, there is too much glare, weather conditions are poor, or lanes are poorly marked.
- Not on slippery or icy roads.
- Not in adverse weather conditions, including rain, sleet, fog, ice, or snow.
- Not on winding or hilly roads.
- Not for city driving.

(Continued)

NOT FOR RESALE

Warning (Continued)

- Not during heavy or emergency braking.
- Not on surface streets.
- Not on a road shoulder, service drive, or under an elevated freeway.
- Not when towing a trailer that does not meet GM approved guidelines.
- Not in a highway exit lane.

⚠ Warning

Super Cruise can only assist to maintain lane position, or steer to change lanes, when driving on compatible roads. You must supervise the driving task and monitor the road conditions. You may need to respond to traffic events by steering, braking, or accelerating. See Defensive Driving.

Super Cruise is:

- Not a self-driving system

(Continued)

Warning (Continued)

- Not a crash avoidance or warning system
- Not a substitute for proper supervision of the driving task

⚠ Warning

Some state and local laws may require hands to be kept on the steering wheel at all times. Only remove your hands from the steering wheel if Super Cruise is engaged, it is safe to do so, and it is permitted by state and local laws.

⚠ Warning

To prevent serious injury or death, be alert and pay special attention when passing highway exits, entrances, and crossings with Super Cruise, and be ready to take control of the vehicle when necessary. Changes in lane markings around exits and entrances can momentarily cause Super

(Continued)

Warning (Continued)

Cruise to not detect the correct lane. If this occurs, Super Cruise may attempt steering inputs to bring the vehicle back into the correct lane and, in rare circumstances, could over-correct and cause the vehicle to momentarily cross into a lane next to your vehicle unless you manually steer to maintain your lane position.

If equipped, Super Cruise is an advanced driver assistance technology that allows hands-free driving on compatible roads. Additionally, it offers support for trailering and lane changes. Super Cruise works with Adaptive Cruise Control to maintain the selected speed and following distance. It also uses the Driver Attention System to ensure you are paying attention to the road. The Driver Attention System monitors your head position and eye gaze but does not record or save video.

Super Cruise is designed to operate only when:

- The vehicle has an active OnStar Connected Services plan.
- Adaptive Cruise Control is engaged. See *Adaptive Cruise Control (Advanced)* ⇨ *240*.

NOT FOR RESALE

- The Driver Attention System detects the driver's head and eyes are directed toward the road ahead.
- The driver's seat belt is buckled.
- The lane markings are clearly visible and detectable by the system.
- The outside temperature is above 15° F (-9° C).
- The vehicle speed is less than approximately 85 mph (137 km/h).
- Teen Driver, if equipped, is not active.
- The camera and radar sensors are functioning and not covered, obstructed, or damaged.
- Adjustable Ride Height, if equipped, must be at Normal ride height.
- No other conditions are preventing the system from working properly.

When Super Cruise is unavailable, a message will display with the reason. See "Super Cruise Message Summary" later in this section. You can also press and hold on the steering wheel to have the system display the unavailability message.

Engaging Super Cruise

Warning

Super Cruise is a driver assistance system and cannot accurately detect or predict all situations. Super Cruise is not a crash avoidance system. To prevent serious injury or death, you must supervise the driving task and monitor the road conditions. You may need to respond to traffic events by steering, braking, or accelerating. See *Defensive Driving* ⇨ *190*. Super Cruise also cannot determine whether you are awake, asleep, impaired, or properly focused on safe driving. The vehicle could crash into other vehicles, drive out of the lane, or drive off the road. Complete attention is always required while driving, even while using Super Cruise. Be prepared to take over steering or apply the brakes at any time.

Warning

Super Cruise may not begin steering immediately, even when Super Cruise is available and has been pressed. To prevent serious injury or death, only remove your hands from the steering wheel if the steering wheel lightbar, the Super Cruise light, and the Adaptive Cruise Control light are green.

Press on the steering wheel to enable Super Cruise and engage Adaptive Cruise Control at the current selected set speed.

The system automatically engages the appropriate level of assistance based on availability and operating conditions. There are two possible assistance levels:

Adaptive Cruise Control: When Adaptive Cruise Control is engaged, appears green in the instrument cluster. This mode maintains a selected gap from vehicles ahead but requires hands to be on the steering wheel at all times. See *Adaptive Cruise Control (Advanced)* ⇨ *240*.

NOT FOR RESALE

Super Cruise: When the vehicle is centered in the lane, displays green in the instrument cluster, and the steering wheel lightbar turns green, you may take your hands off the steering wheel. This is the only level that allows for hands-free driving.

Adjust the desired vehicle speed using the SET-/RES+ button.

If Super Cruise and Adaptive Cruise Control were not disabled through the steering wheel button when the vehicle was turned off, SET-/RES+ can be used to re-engage the system next time you drive the vehicle.

Super Cruise Status and Lightbar

Warning

Super Cruise will not maintain the vehicle's speed while the steering wheel lightbar is flashing red. If the steering wheel lightbar flashes red, immediately resume manual steering to prevent serious injury or death. If you do not resume manual steering, the vehicle will begin to slow in the same lane and eventually come to a complete stop on the road.

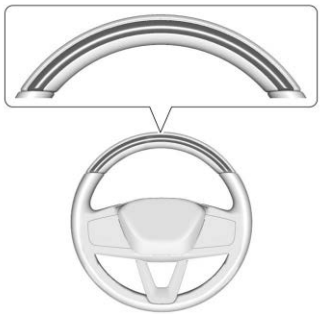

Driver Assistance Levels and Display Indicators in Increasing Order of Assistance



Adaptive Cruise Control

Green: Adaptive Cruise Control is actively controlling your speed and maintaining an appropriate and preselected following distance with the lead vehicle.

Blue: Adaptive Cruise Control was overridden and will not brake nor maintain following distance.



Super Cruise

White: Super Cruise is enabled and in standby mode. The steering wheel lightbar is off.

Green: Super Cruise is actively steering your vehicle. Pay attention to the road and vehicle operation. The steering wheel lightbar turns solid green when it is safe to remove your hands from the steering wheel.

Flashing Green: Super Cruise has detected you are not paying sufficiently close attention to the road. Pay attention to the road ahead. The steering wheel lightbar will flash green as well.

Red: Take over steering immediately. Super Cruise will disengage if you fail to take over steering. The steering wheel lightbar will flash red.

NOT FOR RESALE

Lane Changes

⚠ Warning

To help prevent crashes before making a lane change:

- Always check mirrors.
- Glance over your shoulder.
- Use the turn signals.

⚠ Warning

Super Cruise Lane Change may not detect a vehicle in an adjacent lane. Always supervise the driving task and monitor traffic conditions when using the Super Cruise Lane Change feature. Only request a lane change when traffic conditions are safe for a lane change, and always be ready to manually steer the vehicle.

Super Cruise allows for manual, automatic, or turn signal activated lane changes. Automatic and turn signal activated lane changes are only available in Super Cruise hands-free functionality. Super Cruise Lane Change functionality may be disabled when a trailer or other accessories (e.g., bike rack, cargo tray, etc.) are detected. Do not use Super Cruise Lane Change when towing a trailer.

To view the available settings, from the infotainment app screen, select Settings > Vehicle > Super Cruise Lane Change.

Automatic Lane Changes

The system may automatically initiate a lane change under the following conditions:

- to pass a slower vehicle.
- to merge out of a lane that the system detects is ending.
- to allow space for other vehicles to merge from a highway entrance ramp.
- to move to the right when traveling in the leftmost lane.
- to follow a route set on the built-in navigation system.

To cancel an automatic lane change, activate the turn signal lever or steer manually.

Automatic Lane Change is not available when the system detects a construction zone.

Turn Signal Activated Lane Changes

To initiate a turn signal activated lane change:

1. Ensure the adjacent lane is clear of traffic.
2. Activate the turn signal in the direction you want to go.
3. The system will steer the vehicle to change lanes.

To cancel a turn signal activated lane change, deactivate the turn signal lever or steer manually.

When Super Cruise is Steering

When the vehicle is positioned in the center of the lane, the steering wheel lightbar and will turn green, indicating Super Cruise is steering the vehicle.

When Super Cruise controls the steering, traffic and other conditions and laws permit, and it is safe to do so, your hands can be taken off the steering wheel.

Always pay attention to the road and the operation of the vehicle. Always monitor and be attentive of surrounding traffic, including vehicles that may cross the road in front of your vehicle.

NOT FOR RESALE

Manual Steering

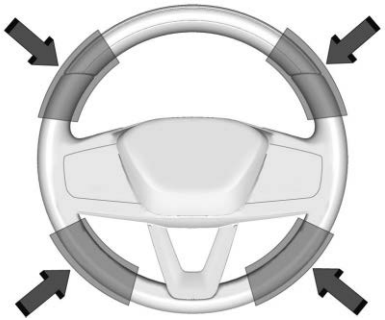

Super Cruise steering can be overridden with manual steering at any time. To begin steering manually, hold the steering wheel firmly with both hands using any of the steering wheel sensor locations shown.

You can adjust vehicle position in the lane by making small steering adjustments while the system is active. If you steer out of the lane, the system will disengage.

When ready to allow Super Cruise to resume steering, center the vehicle in the lane and hold the steering wheel until the steering wheel lightbar turns green. Release the steering wheel when it is safe to do so.

Escalation Requiring Driver To Take Control of the Steering Wheel

When you must take control of the steering wheel, and the steering wheel lightbar will turn red, and a message will display in the Driver Information Center. When you begin steering manually, Super Cruise will disengage.

In addition, audible alerts will sound, or the Safety Alert Seat will vibrate, if equipped. To view collision and detection settings, from the infotainment app screen, select Settings > Vehicle > Collision/Detection Systems.

The red flashing steering wheel lightbar could occur under any of the following conditions:

- The lane markings are poor, or visibility is limited.
- The Driver Attention System does not detect that the driver's head and eyes are directed toward the road ahead.
- Adaptive Cruise Control is cancelled.
- The vehicle is on a tight curve, the lane is too wide, or the vehicle enters a curve too quickly.
- The Super Cruise enabled road ends.
- The vehicle is approaching an intersection controlled by a traffic light, stop sign, or other traffic control device.
- A Super Cruise system fault occurs.
- Super Cruise is unable to complete a lane change maneuver.
- Super Cruise detects that the outside temperature is too cold to operate correctly.
- The driver's seatbelt becomes unbuckled.

The system will be locked out if the driver does not take control of the vehicle when prompted. The system may be disabled for a short duration. If the driver repeatedly does not take control of the vehicle when prompted, the system will be disabled until the vehicle is turned off and back on.

Driving Visualizer

Warning

Driving Visualizer is not a replacement for keeping your eyes on the road ahead. It may not detect all objects and may detect

(Continued)

NOT FOR RESALE

Warning (Continued)

objects incorrectly. Relying on the display could cause you or others to be injured or killed. Always supervise the driving task and monitor traffic conditions.

If equipped, when the Driving Visualizer view is selected on the instrument cluster while Super Cruise is active, additional content will be displayed. This includes the vehicle's active path, surrounding lanes, and objects as they are detected by the system.

See *Instrument Cluster* ⇨ *112*.

Trailer Towing With Super Cruise

Super Cruise may be used when towing a trailer that meets the size and weight limits specified in the Trailer Towing section. See *General Towing Information* ⇨ *316*.

If the vehicle is equipped with an aftermarket trailer brake controller, disengage Super Cruise before applying the manual trailer brake. Super Cruise will not automatically disengage when the manual trailer brake is applied.

Super Cruise can recognize when the vehicle is pulling a trailer and adjusts the following gap for extra stopping distance. Automatic and turn signal activated lane changes are disabled for safety while trailering.

Stationary or Very Slow-Moving Objects; Cross-Traffic

⚠ Warning

Super Cruise is not a crash avoidance system and will not steer or brake to avoid a crash. Super Cruise does not steer to prevent a crash with stopped or slow-moving vehicles. You must supervise the driving task and may need to steer and brake to prevent a crash, especially in stop-and-go traffic or when a vehicle suddenly enters your lane. Always pay attention when using Super Cruise. Failure to do so could result in a crash involving serious injury or death.

Curves in the Road

⚠ Warning

The vehicle could drift out of your lane of travel. To prevent crashes, always be ready to manually steer. Super Cruise may not detect your lane on curves in the road. Super Cruise may not detect the markings that show your lane. You may not have time to react to a vehicle in the lane next to your vehicle while on curves in the road. Super Cruise may hand control back to the driver more often driving around a sharp curve while towing a trailer.

Super Cruise may operate differently in sharp curves. It may drift out of your lane of travel if the curve is too sharp.

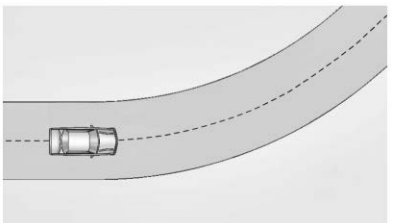

NOT FOR RESALE

When entering a curve, Super Cruise may not detect the lane markings and may not adjust the steering enough to stay in your lane of travel. When this happens, you will need to steer the vehicle.

Super Cruise may detect other lane markings that are not in your lane and may or may not steer appropriately to maintain your lane.

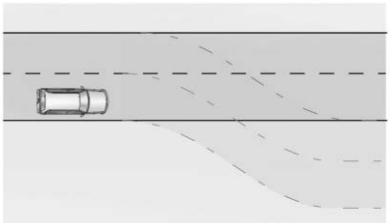

Super Cruise may occasionally provide an alert and/or steering that is considered unnecessary. It could respond to lane markings in different lanes, signs, guardrails, and other stationary objects when entering or exiting a curve. This is normal operation. The vehicle does not need service.

Other Vehicles Entering Your Lane

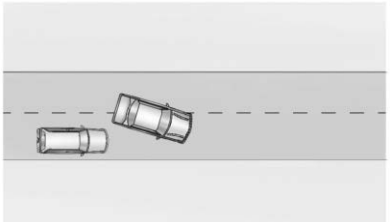

Super Cruise may not detect a vehicle that enters your lane, or may not brake fast enough to avoid a crash. You must manually brake and steer the vehicle.

Intersections and Vehicles Crossing the Road Ahead

Super Cruise will not brake the vehicle when approaching an intersection that is controlled by a traffic light or stop sign. Super Cruise will not detect vehicles crossing the road ahead, including at intersections, and will not automatically steer or brake to prevent a collision. You must manually brake and steer the vehicle.

Super Cruise on Hills

Do not use Super Cruise while driving on steep hills.

Disengaging or Disabling Super Cruise

To cancel or turn off Super Cruise in your vehicle, you can use one of the following methods:

- Press the brake pedal or on the steering wheel to disengage Super Cruise and Adaptive Cruise Control.
- Use the Regen on Demand paddle, if equipped, to disengage Super Cruise and Adaptive Cruise Control.
- Press on the steering wheel to disengage Super Cruise.
- Turn off Adaptive Cruise Control. This also disables Super Cruise.

NOT FOR RESALE

Super Cruise Message Summary

Subscription Required - Press OnStar Button	• The owner's required Connected Services subscription may have ended. • Press the Blue OnStar button in your vehicle to speak with an OnStar representative, who can help determine the issue and what actions to take
Unavailable Turn on Adaptive Cruise Control	Adaptive Cruise Control must be on before Super Cruise can be enabled. • Set speed is not required before enabling Super Cruise. • Adaptive Cruise Control is not required to be engaged before enabling Super Cruise.
Unavailable Lane Ending	Super Cruise is disabled because the driving lane is ending.
Unavailable No Road Information	• There is no map information available for that portion of the road. Recent road reconstruction may turn off Super Cruise for that section of road until new map information is available. • The vehicle is not on the correct type of road. A controlled access freeway or compatible divided or non-divided road is required for Super Cruise. • There are lanes entering or exiting on both the left and right side of the road.
Unavailable Sensors Can't Find Lane Lines	• Rain or snow is inhibiting the system's ability to see lane lines. • Direct sunlight is on the front camera at dawn or dusk. • There are missing or poor lane line markings on the road. • There is sun glare on the road surface. • There is heavy rain, puddles, road spray, or inclement weather conditions that are affecting system performance.

NOT FOR RESALE

Unavailable Sensor Can't See Face Clearly	• Sun is shining into the Driver Attention System camera. • Dawn or dusk sun glare is on the driver's face. • Cups, food, hands, or other objects are obscuring the Driver Attention System view of the driver's face. • The steering column is pointed too high or low for the Driver Attention System to see the driver. Adjust the steering column or the seat if the message occurs frequently.
Unavailable Looking Away From Road for Too Long	The Driver Attention System detects that the driver is not looking at the road.
Unavailable Driving Too Fast	The vehicle is traveling faster than 137 km/h (85 mph). The maximum Super Cruise speed in curves will vary based on how sharp the curve is. The vehicle will automatically decrease speed if needed.
Unavailable Driving in Exit Lane	The Super Cruise system has detected that the vehicle is in an exit lane.
Unavailable GPS Signal Lost	• There is poor reception in isolated areas. • Reception is being blocked by buildings or other large structures.
Unavailable You Have Taken Vehicle Control	• The brake pedal is being pressed. • Adaptive Cruise Control has been canceled or turned off.
Unavailable Sensor Blocked	Clear snow, ice, dirt, or other contaminants from the front and rear areas of the vehicle.
Unavailable Sharp Curve	Some curves are too sharp to be navigated by the Super Cruise system. Super Cruise will be available after the curve is traveled.

NOT FOR RESALE

Unavailable Over Weight Limit	Super Cruise has detected that the trailer is over the allowable weight limit.
Unavailable Trailer Too Unstable	Super Cruise has detected that the attached trailer is causing an unstable condition. Check the trailer and/or load.
Unavailable Trailer Too Large	Trailer size (length/width) is larger than supported for Super Cruise operation.
Unavailable Lane Too Narrow	Super Cruise has detected that the lane width ahead is too narrow for Super Cruise operation while towing a trailer.
Super Cruise Unavailable	Super Cruise is unavailable for reasons not described in other messages.
Super Cruise Locked Out See Owner's Manual	The driver did not take control of the vehicle when prompted by the Super Cruise system. The Super Cruise system will be disabled until the vehicle is turned off and back on.
Unavailable Seat Belt Not Fastened	The driver seat belt is not fastened.
Unavailable Teen Driver Mode Active	Teen Driver mode is engaged.
Unavailable Snow Mode	A snow plow is attached.
Unavailable Unsupported Intersection	Super Cruise has detected an unsupported intersection.
Unavailable Approaching Toll Booth	Super Cruise has detected that there is a toll booth ahead.

NOT FOR RESALE

Unavailable Ride Height Out of Range	The vehicle ride height is out of Super Cruise operational range.
Caution Construction Zone - Drive With Care	Super Cruise has detected a construction zone.

Map Updates

Super Cruise relies on precise LIDAR based maps, often called High Definition (HD) Maps. These HD Maps are regularly updated by GM and sent to your vehicle. This will happen automatically as your vehicle is driven. This will not require any user input. If there is any issue with these HD Map updates, a Service Driver Assist error message will be displayed. If this message is displayed, please contact an authorized GM Service Center.

Connectivity

An active Connected Services plan that includes Super Cruise Services is required to use Super Cruise. If the vehicle is equipped with OnStar and has an active services plan, additional data may be collected through the OnStar system. This includes information about the vehicle's operation, a crash involving the vehicle, the use of the vehicle and its features, and, in certain situations, the location and approximate GPS speed of the vehicle.

Refer to the OnStar Terms and Conditions and Privacy Statement on the OnStar website.

For additional information on Hands-On and Hands-Free driving, see https://www.onstar.com/services/super-cruise-hands-free-driving.

Location Services

This setting enables or disables location services for OnStar. If you disable location services, GM may still collect vehicle location information from the vehicle in the event of an emergency (such as in the event of a crash, when the emergency call button is pressed, or where there is overheating of a high voltage battery).

System Care

Caution

The Super Cruise system is a highly sophisticated system and should only be serviced by technicians with the proper training, tools, and safety instructions, which your dealer has. Without proper training and tools the vehicle may become damaged.

The camera on the steering column has a lens cover that may become dirty over time and affect camera performance. Clean the lens cover with a soft cloth sprayed with glass cleaner. Wipe the lens gently, then dry it. Never use abrasive cloths/cleaners or corrosive chemicals of any kind on the lens cover.

NOT FOR RESALE

Super Cruise uses the front radar, front camera, rear radar, and 360-degree cameras for its operation. Clean surfaces are required for Super Cruise operation. See *Adaptive Cruise Control (Advanced)* ⇨ *240*, *Surround Vision System* ⇨ *278*, and *Lane Keep Assist (LKA)* ⇨ *301* for care information.

Advanced Driver Assistance Systems

⚠ Warning

Do not rely on the Driver Assistance Systems. These systems do not replace the need for paying attention and driving safely. You may not hear or feel alerts or warnings provided by these systems. Failure to use proper care when driving may result in injury, death, or vehicle damage. See *Defensive Driving* ⇨ *190*.

Under many conditions, these systems will not:

- Detect children, pedestrians, bicyclists, or animals.

(Continued)

Warning (Continued)

- Detect vehicles or objects outside the area monitored by the system.
- Work at all driving speeds.
- Warn you or provide you with enough time to avoid a crash.
- Work under poor visibility or bad weather conditions.
- Work if the detection sensor is not cleaned or is covered by ice, snow, mud, or dirt.
- Work if the detection sensor is covered up, such as with a sticker, magnet, or metal plate.
- Work if the area surrounding the detection sensor is damaged or not properly repaired.

Complete attention is always required while driving, and you should be ready to take action and apply the brakes and/or steer the vehicle to avoid crashes.

This vehicle may have features that work together to help avoid crashes or reduce crash damage while driving, backing, and parking. Read this entire section before using these systems.

Audible or Safety Alert Seat

Some driver assistance features alert the driver of obstacles by sounding an audible alert. To view available settings from the infotainment screen, touch Settings > Vehicle > Comfort and Convenience.

If equipped with the Safety Alert Seat, the driver seat cushion may provide a vibrating pulse alert instead of sounding an alert. To view available settings from the infotainment screen, touch Settings > Vehicle > Collision/ Detection Systems.

Cleaning

Depending on vehicle options, keep these areas of the vehicle clean to ensure the best driver assistance feature performance. A Driver Information Center message may display when a system is unavailable.

NOT FOR RESALE

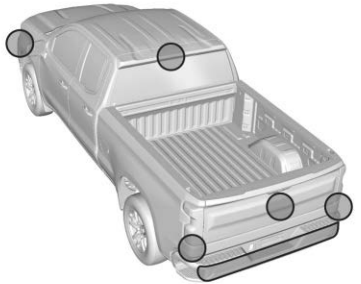



- Front and rear bumpers and the area below the bumpers
- Front grille and headlights
- Front camera lens in the front grille or near the front emblem
- Front side and rear side panels
- Outside of the windshield in front of the rearview mirror
- Side camera lens on the bottom of the outside mirrors
- Rear side corner bumpers
- Rear Vision Camera in the tailgate handle
- Rear Camera Mirror and Cargo View Camera in the Center High-Mounted Stoplight

Assistance Systems for Parking or Backing

If equipped, the Rear Vision Camera, Surround Vision, Rear Park Assist, Front Park Assist, Automatic Parking Assist, Reverse Automatic Braking, Rear Pedestrian Alert, and Rear Cross Traffic Alert may help the driver park or avoid objects. Always check around the vehicle when parking or backing.

The Rear Vision Camera, Rear Park Assist, Reverse Automatic Braking, Rear Pedestrian Alert, and Surround Vision will not work properly if the tailgate is down. If the tailgate is down, do not use these systems.

Rear Vision Camera (RVC)

⚠ Warning

The camera(s) do not display children, pedestrians, bicyclists, crossing traffic, animals, or any other object outside of the cameras' field of view, below the bumper, or under the vehicle. Shown distances may be different from actual distances. Do not drive or park the vehicle using only these camera(s). Always check behind and around the vehicle before driving. Failure to use proper care may result in injury, death, or vehicle damage.

When the vehicle is shifted into R (Reverse), the Rear Vision Camera displays an image of the area behind the vehicle in the infotainment display. The previous screen displays when the vehicle is shifted out of R (Reverse) after a short delay. To return to the previous screen sooner, press any button on the infotainment

NOT FOR RESALE

system, shift into P (Park), or, while in D (Drive), reach a vehicle speed of approximately 12 km/h (8 mph). The rear vision camera is in the tailgate handle.

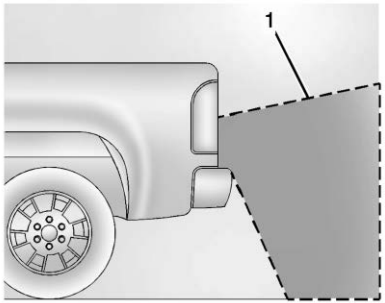

1. View Displayed by the Rear Vision Camera

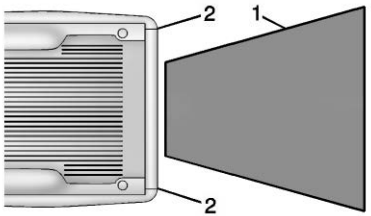

1. View Displayed by the Rear Vision Camera

2. Corners of the Rear Bumper

Displayed images may be farther or closer than they appear. The area displayed is limited and objects that are close to either corner of the bumper or under the bumper do not display.

A warning triangle may display to show that Rear Park Assist has detected an object. This triangle changes from amber to red and increases in size the closer the object.

If equipped with Hitch View, see *Surround Vision System* ⇨ *278*.

Surround Vision System

⚠ Warning

The Surround Vision cameras have blind spots and will not display all objects near the corners of the vehicle. Folding outside mirrors that are out of position may not display surround view correctly. Always check around the vehicle when parking or backing.

⚠ Warning

The camera(s) do not display children, pedestrians, bicyclists, crossing traffic, animals, or any other object outside of the cameras' field of view, below the bumper, or under the vehicle. Shown distances may be different from actual distances. Do not drive or park the vehicle using only these camera(s). Always check behind and around the vehicle before driving. Failure to use proper care may result in injury, death, or vehicle damage.

If equipped the Surround Vision system can display various views surrounding the vehicle in the infotainment display.

This vehicle may have the capability to install accessory trailer cameras. See your dealer.

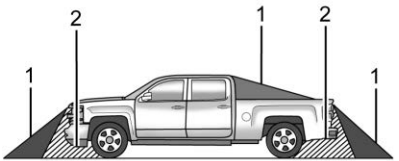

NOT FOR RESALE

1. Views Displayed by the Surround Vision Cameras
2. Area Not Shown

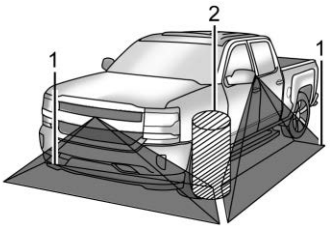

1. Views Displayed by the Surround Vision Cameras
2. Area Not Shown

Camera Views

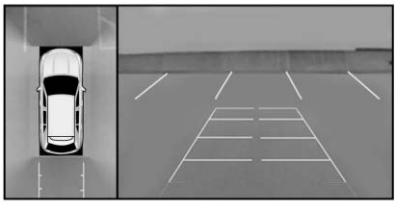

Some views may automatically display, or switch based on vehicle movement or additional safety features. For views that use a shared button, touch the button to switch between them.

Touch the camera view buttons along the bottom of the infotainment display to access each view (if equipped) :

- Front/Rear Standard View

  Displays a view of the area in front of or behind the vehicle. To access Front/Rear Standard View, select Camera app, then touch Front/Rear Standard View on the infotainment display.

  The Front Standard View also displays when the Park Assist system, if equipped, detects a close object in front of the vehicle.

  Shifting to reverse will activate Rear Standard View.

  Alerts for Rear Pedestrian Alert, Park Assist, and Rear Cross Traffic Alert are available in Rear Standard View.

- Front/Rear Overhead View

  Displays a front or rear overhead view of the vehicle. To access the Front/Rear Overhead View, select Camera app, then touch Front/Rear Overhead View on the infotainment display.

- Front/Rear Side View

  Displays a view that shows objects along the side of the vehicle. To access Front/Rear Side View, select Camera app, then touch Front/Rear Side View on the infotainment display. In some models, touching the button multiple times will alternate between front and rear views.

  Following an initial shift to R (reverse), the view will automatically switch to match the direction of gear selected.

NOT FOR RESALE

- Hitch View

  Displays a zoomed-in view of the hitch area to assist with aligning the vehicle's hitch ball with the trailer coupler and monitoring the trailer connection. To access Hitch View, select Camera app, then touch Hitch View on the infotainment display.

  Shifting into P (Park) while in this view will automatically engage the Electric Parking Brake.

- Surround View

  Touch the Surround View icon to enable or disable the view. Displays an image of the area surrounding the vehicle. Surround View is displayed alongside the currently selected view.

- Camera App Guidance Lines

  The Camera app supports three possible guidance modes: No Guidance, Vehicle Guidance, and Trailering Guidance. The guidance lines icon may appear as a selection when a view supports guidance lines. To change guidance mode, select the appropriate guidance icon or menu item. Depending on the guidance mode and view selected, different guidance lines may appear. A grayed-out icon indicates that guidance lines are not available. Certain views do not support guidance lines.

- Cabin Glance

  If equipped, displays a live feed of the seating area on the infotainment screen. This view is used to monitor the occupants of the vehicle without needing to turn around. The video is real-time only and is not recorded or stored.

  - Standard Guidance Lines are available in Front/Rear Standard Views, Front/Rear Top-Down Views, and Surround View when the vehicle guidance mode is selected. Standard Guidance Lines show current and intended vehicle path.

⚠ Warning

Use Hitch Guidance only to help back the vehicle to a trailer hitch or, when traveling above 12 km/h (8 mph), to briefly check the status of your trailer. Do not use for any other purpose, such as making lane change decisions. Before making a lane change,

(Continued)

Warning (Continued)

always check the mirrors and glance over your shoulder. Improper use could result in serious injury to you or others.

  - The Hitch Guidance Line is available in Rear Standard View or Cargo Bed View when the Trailering Guidance mode is selected. Hitch Guidance displays a single centered guidance line on the infotainment display to assist with aligning the vehicle's hitch with a trailer coupler. Align the Hitch Guidance Line with the trailer coupler by continuously steering the vehicle to keep the guidance line centered on the coupler when backing. Park Assist overlays will not display when the Hitch Guidance Line is active.
  - Rear Trailer Guidance Lines are available in the Rear Trailer View when the Trailering Guidance mode is selected and the rear trailer camera calibration has been successfully completed. Rear Trailer Guidance Lines show the intended path

NOT FOR RESALE

(yellow) and the current path (blue) of the trailer. The current path guidance lines will converge with the intended path guidance lines.

- Cargo Bed View

  Displays a view of the truck bed and the area behind the vehicle to assist in cargo or hitch monitoring or hitching to a fifth-wheel or gooseneck trailer.

  To view, select Cargo Bed View on the infotainment display when the Camera app is active.

  The view can be closed by selecting X, Home, or Back. When the Cargo Bed View is selected when not in D (Drive), the cargo bed lighting is turned on automatically.

  The feature can be enabled or disabled. To view available settings from the infotainment screen, touch Settings > Vehicle > Collision/ Detection Systems.

- Bed Hitch View

  Displays a zoomed-in view of the bed hitch area to assist with aligning the vehicle's hitch with the trailer coupler and monitoring the trailer connection. To view, select Bed Hitch View on the infotainment display when the Camera app is active. The view can be closed by selecting X, Home, or Back on the infotainment display. Shifting into P (Park) while in this view, will automatically engage the Electric Parking Brake. When the Bed Hitch View is selected when not in (D) Drive, the cargo bed lighting is turned on automatically.

  The feature can be enabled or disabled. To view available settings from the infotainment screen, touch Settings > Vehicle > Collision/ Detection Systems.

Underbody Camera

If equipped, there are two cameras underneath the vehicle that show a view of the areas underneath the front and rear bumper. This feature is activated through the infotainment display and an additional camera view may be available in the Camera App:

Underbody Split View: Front-Forward/ Forward-Rearward: Displays a split screen of two camera images. Touching the icon multiple times will toggle between a split of the front grille camera with Underbody Forward and Underbody Forward with Underbody Rearward.

Caution
Excessive or prolonged use may cause damage to the shield. Periodic service or replacement may be required.

The cameras can be washed by the following procedure:

1. Touch CAMERA on the infotainment display.
2. Select the front or rear underbody camera view.

NOT FOR RESALE

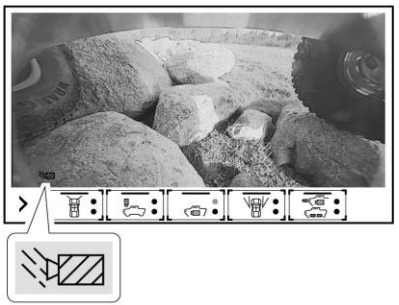

3. Touch the symbol on the lower-left of the infotainment display to activate the washer.

If there is excessive or dry debris on the shield in front of the camera lens, the activated washer may not effectively clean it. A manual cleaning may be necessary.

Park Assist

⚠ Warning

The Park Assist system does not detect children, pedestrians, bicyclists, animals, or objects located below the bumper or that are too close or too far from the vehicle. It is not available at speeds greater than 8 km/h (5 mph). To prevent injury, death, or vehicle damage, even with Park Assist, always check the area around the vehicle and check all mirrors before moving forward or backing.

The vehicle may be equipped with Rear Park Assist or Front and Rear Park Assist. Under certain conditions, the Park Assist system can assist the driver as the vehicle moves at speeds of less than 8 km/h (5 mph). The sensors on the bumpers may detect objects up to 1.2 m (4 ft) in front and 1.8 m (6 ft) behind the vehicle within a zone 25 cm (10 in) high off the ground and below bumper level. These detection distances may be shorter during warmer or humid weather. Blocked sensors will not detect objects and can also cause false detections. Keep the sensors clean of mud, dirt, snow, ice, and slush; and clean sensors after a car wash in freezing temperatures.

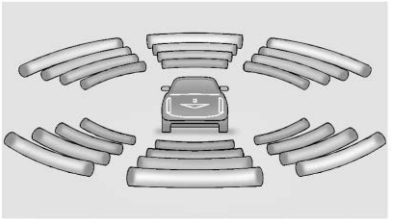

The instrument cluster may have a Park Assist display with bars that show “distance to object” and object location information for the Front and Rear Park Assist system. As the object gets closer, more bars light up and the bars change color from yellow to amber to red.

When an object is first detected around the vehicle, one audible alert will be heard from the front or rear (depending on the object's location), or the driver seat will pulse two times if equipped with Safety Alert Seat. When the object is very close to the vehicle, the beeps will be continuous or the driver seat will pulse five times. Beeps in the front are higher pitched than beeps in the rear.

NOT FOR RESALE

Turning the Features On or Off



Press P on the center stack to turn on or off the Front and Rear Park Assist. The indicator light next to the button comes on when the features are on and turns off when the features have been disabled.

Front and Rear Park Assist can be turned Off, On, or On with Towbar. To view available settings from the infotainment screen, touch Settings > Vehicle > Comfort and Convenience. If Park Assist is turned off through vehicle personalization, the Park Assist button will be disabled. To turn Park Assist on again, select On in vehicle personalization. The On with Towbar setting allows Park Assist to work properly with a trailer hitch. Some larger trailer hitches may not be compatible.

Turn off Park Assist when towing a trailer.

Reverse Automatic Braking (RAB)

Backing Warning and Reverse Automatic Braking

⚠ Warning

Reverse Automatic Braking is an assistance feature only and does not replace safe, attentive driving. Reverse Automatic Braking only functions when the vehicle is in R (Reverse) and the system detects an object directly behind the vehicle. Even when an object is detected, the system may not brake or stop in time to avoid a crash. To prevent property damage, injury, or death, always check your surroundings, use your mirrors when backing up, and be ready to apply the brakes. Do not rely on Reverse Automatic Braking to prevent a crash.

Reverse Automatic Braking may not:

- Detect all children, pedestrians, bicyclists, animals, vehicles or objects.
- Detect an object that is below the bumper or too close or too far from the vehicle.

(Continued)

Warning (Continued)

- Detect an object if it is partially blocked by an adjacent vehicle or other objects.
- Detect an object when weather limits visibility, such as in fog, rain, or snow.
- Operate when the sensors in the left or right corners of the rear bumper are covered with mud, dirt, snow, slush, ice, etc.
- Operate when a trailer or rear-mounted accessory, such as a bike rack or hitch-mounted cargo carrier, is attached to the vehicle.
- Operate when backing at higher speeds or very slow speeds.
- Operate when the tailgate is down.

Reverse Automatic Braking may automatically brake the vehicle suddenly in situations where it is unexpected and undesired. It could respond to guardrails, signs, heavy rain or snow and other non-moving objects. To override Reverse Automatic Braking, firmly press the accelerator pedal, if it is safe to do so.

NOT FOR RESALE

If equipped and enabled, when in R (Reverse), Backing Warning alerts of rear objects at vehicle speeds greater than 8 km/h (5 mph), and Reverse Automatic Braking may automatically brake hard at speeds between 1-32 km/h (0.5-20 mph).

Reverse Automatic Braking can be turned on or off using the infotainment system.

The Backing Warning System will chime once from the rear when an object is first detected, or pulse twice on both sides of the Safety Alert Seat. When the system detects a potential crash, chimes will be heard from the rear, or five pulses will be felt on both sides of the Safety Alert Seat. There may also be a brief, sharp application of the brakes.

When the vehicle is in R (Reverse), if the system detects the vehicle is backing too fast to avoid a crash with a detected object behind your vehicle in your path, it may automatically brake hard to a stop to help avoid or reduce the harm caused by a backing crash.

Pressing the brake pedal after the vehicle comes to a stop will release Reverse Automatic Braking. If the brake pedal is not pressed soon after the stop, the electric parking brake may be set. When it is safe, press the accelerator pedal firmly at any time to override Reverse Automatic Braking.

Unexpected braking events are possible with a static installed accessory, such as a bike rack or hitch-mounted cargo carrier.

Rear Pedestrian Alert

⚠ Warning

Rear Pedestrian Alert does not automatically brake the vehicle. It also does not provide an alert unless it detects a pedestrian, and it may not detect all pedestrians if:

- The pedestrian is not directly behind the vehicle, fully visible to the Rear Vision Camera (RVC), or standing upright.
- The pedestrian is part of a group.
- The pedestrian is a child.
- Visibility is poor, including nighttime conditions, fog, rain, or snow.
- The RVC is blocked by dirt, snow, or ice.

(Continued)

Warning (Continued)

- The RVC, taillights, or back-up lights are not cleaned or in proper working condition.
- The vehicle is not in R (Reverse).

To help avoid death or injury, always check for pedestrians around the vehicle before backing up. Be ready to take action and apply the brakes. See *Defensive Driving* ⇨ *190*. Keep the RVC, taillights, and back-up lights clean and in good repair.

Under certain conditions, this feature can provide alerts for a pedestrian within the system's range directly behind the vehicle. This feature only works in R (Reverse) below 12 km/h (8 mph), and detects pedestrians up to 8 m (26 ft) away during daytime driving. During nighttime driving, feature performance is very limited.

NOT FOR RESALE



Rear Pedestrian Alert Indicator

When a pedestrian is detected within the system's range directly behind the vehicle, this symbol flashes amber on the infotainment display, along with five audible alerts from the rear, or if equipped, two pulses from both sides of the driver seat. When a pedestrian is detected close to the vehicle, the symbol flashes red on the infotainment display, along with ten audible alerts from the rear, or if equipped, seven pulses from both sides of the driver seat.

Rear Pedestrian Alert can be set to Off or Alert. To view available settings from the infotainment screen, touch Settings > Vehicle > Collision/Detection Systems. If equipped, alerts can be set to audible alerts or seat pulses. To view available settings from the infotainment screen, touch Settings > Vehicle > Collision/Detection Systems > Alert Type.

Rear Cross Traffic Alert (RCTA) System

⚠ Warning

Rear Cross Traffic Alert is an assistance feature only. It does not replace safe, attentive driving. To prevent property damage, injury, or death, always check your surroundings and use your mirrors before backing up. Do not rely solely on Rear Cross Traffic Alert to warn of potential collisions. Rear Cross Traffic Alert only operates while the vehicle is in R (Reverse) in a limited speed range. Rear Cross Traffic Alert may not:

- Detect all vehicles, pedestrians, bicyclists, animals, or objects too close or too far from the vehicle.
- Detect an object if it is partially blocked by an adjacent vehicle or other objects.
- Detect an object when weather limits visibility, such as in fog, rain, or snow.

(Continued)

Warning (Continued)

- Operate when the sensors in the left or right corners of the rear bumper are covered with mud, dirt, snow, slush, ice, etc.
- Operate when a trailer or rear-mounted accessory, such as a bike rack or hitch-mounted cargo carrier, are attached to the vehicle.

If equipped, Rear Cross Traffic Alert displays a red warning triangle with a left or right pointing arrow on the infotainment display to warn of traffic coming from the left or right. When an object is detected, either three audible alerts sound from the left or right, or three Safety Alert Seat pulses occur on the left or right side, depending on the direction of the detected vehicle.

Use caution while backing up when towing a trailer, as the Rear Cross Traffic Alert detection zones that extend out from the back of the vehicle do not move farther back when a trailer is attached to the vehicle.

NOT FOR RESALE

Rear Cross Traffic Braking (RCTB)

⚠ Warning

Rear Cross Traffic Braking is an assistance feature only. It does not replace safe, attentive driving. To prevent property damage, injury, or death, always check your surroundings and use your mirrors before backing up. Do not rely solely on Rear Cross Traffic Braking to prevent collisions.

Rear Cross Traffic Braking only operates while the vehicle is in R (Reverse) in a limited speed range.

Rear Cross Traffic Braking may not:

- Detect all vehicles, pedestrians, bicyclists, animals, or objects too close or too far from the vehicle.
- Detect an object if it is partially blocked by an adjacent vehicle or other objects.
- Detect an object when weather limits visibility, such as in fog, rain, or snow.

(Continued)

Warning (Continued)

- Operate when the sensors in the left or right corners of the rear bumper are covered with mud, dirt, snow, slush, ice, etc.
- Operate when a trailer or rear-mounted accessory, such as a bike rack or hitch-mounted cargo carrier, are attached to the vehicle.

Rear Cross Traffic Braking may automatically brake the vehicle suddenly in situations where it is unexpected and undesired. It could respond to guardrails, signs, heavy rain or snow and other non-moving objects. To override Rear Cross Traffic Braking, firmly press the accelerator pedal, if it is safe to do so.

If equipped and enabled, under certain conditions, RCTB may detect objects approaching from the left or right side of the rear of the vehicle. When an approaching object is detected, RCTB displays a red warning triangle with a left- or right-pointing arrow on the infotainment display, and either three audible alerts sound from the, or three pulses occur of the Safety Alert Seat in the direction of the detected object.

RCTB may apply the brake to bring the vehicle to a stop if a collision is imminent. Once stopped, the system may engage the Electric Parking Brake (EPB) to hold the vehicle. Release the EPB or press the accelerator pedal to continue driving, if it is safe to do so.

Driving With a Trailer

Use caution while backing up when towing a trailer. Rear Cross Traffic Alert and Rear Cross Traffic Braking are automatically disabled when a trailer is attached to the vehicle.

Turning the Features On or Off

Rear Cross Traffic Alert and Rear Cross Traffic Braking can be turned on or off using the infotainment system. To view available settings from the infotainment app screen, touch Settings > Vehicle > Collision/ Detection Systems.

Assistance Systems for Driving

If equipped, when driving the vehicle in a forward gear, Forward Collision Alert , Front Pedestrian Braking, Lane Keep Assist, Blind

NOT FOR RESALE

Zone Steering Assist, Driver Attention Assist, Lane Change Alert, and/or the Automatic Emergency Braking can help to avoid a crash or reduce crash damage.

Forward Collision Alert (FCA) System

⚠ Warning

Forward Collision Alert is a warning system and does not apply the brakes. When approaching a slower-moving or stopped vehicle ahead too rapidly, or when following a vehicle too closely, Forward Collision Alert may not provide a warning with enough time to help avoid a crash. It also may not provide any warning at all. Forward Collision Alert does not warn of pedestrians, animals, signs, guardrails, bridges, construction barrels, or other objects. Be ready to take action and apply the brakes. See *Defensive Driving* ⇨ *190*.

If equipped, the Forward Collision Alert system may help to avoid or reduce the harm caused by front-end crashes. When approaching a vehicle ahead too quickly, it provides a red flashing alert on the windshield and rapid audible alerts or pulses the driver seat. Forward Collision Alert also lights an amber visual alert if following another vehicle much too closely.

Forward Collision Alert detects vehicles within a distance of approximately 60 m (197 ft) and operates at speeds above 8 km/h (5 mph).

Forward Collision Alert can be disabled through vehicle settings. To view available settings from the infotainment screen, touch Settings > Vehicle > Collision/Detection Systems.

Detecting the Vehicle Ahead

⚠ Warning

FCA does not provide a warning to help avoid a crash, unless it detects a vehicle. FCA may not detect a vehicle ahead if the FCA sensor is blocked by dirt, snow, or ice, or if the windshield is damaged. It may also not detect a vehicle on winding or hilly roads, or in conditions that can limit visibility such as fog, rain, or snow, or if the headlights or windshield are not cleaned or in proper condition. Keep the windshield, headlights, and FCA sensors clean and in good repair.



Forward Collision Alert warnings will not occur unless the system detects a vehicle ahead. When a vehicle is detected, the vehicle ahead indicator will display green. Vehicles may not be detected on curves, highway exit ramps, or hills, due to poor visibility; or if a vehicle ahead is partially blocked by pedestrians or other objects. Forward Collision Alert will not detect another vehicle ahead until it is completely in the driving lane.

Collision Alert

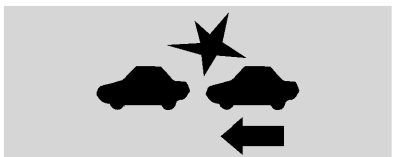

With Head-Up Display

NOT FOR RESALE



Without Head-Up Display

When your vehicle approaches another detected vehicle too rapidly, the red Forward Collision Alert display will flash on the windshield. Also, eight rapid high-pitched audible alerts will sound from the front, or both sides of the Safety Alert Seat will pulse five times. When this Collision Alert occurs, the brake system may prepare for driver braking to occur more rapidly which can cause a brief, mild deceleration. Continue to apply the brake pedal as needed.

Tailgating Alert



The vehicle ahead indicator will display amber when you are following a vehicle ahead much too closely.

Selecting the Alert Timing



The Collision Alert control is on the steering wheel. Press to set the Forward Collision Alert timing to Far, Medium, or Near. The first button press shows the current setting on the Driver Information Center. Additional button presses will change this setting. The chosen setting will remain until it is changed and will affect the timing of both the Collision Alert and the Tailgating Alert features. The timing of both alerts will vary based on vehicle speed. The faster the vehicle speed, the farther away the alert will occur. Consider traffic and weather conditions when selecting the alert timing. The range of selectable alert timings may not be appropriate for all drivers and driving conditions.

If your vehicle is equipped with Adaptive Cruise Control, changing the Forward Collision Alert timing setting automatically changes the following gap setting (Far, Medium, or Near).

Following Distance Indicator

If equipped, the following distance to a moving vehicle ahead in your path is indicated in following time in seconds on the Driver Information Center. See *Driver Information Center (DIC)* ➪ *131*. The minimum following time is 0.5 seconds away.

If there is no vehicle detected ahead, or the vehicle ahead is out of sensor range, dashes will be displayed.

Unnecessary Alerts

Forward Collision Alert may provide unnecessary alerts for turning vehicles, vehicles in other lanes, objects that are not vehicles, or shadows. These alerts are normal operation and the vehicle does not need service.

NOT FOR RESALE

Cleaning the System

If the Forward Collision Alert system does not seem to operate properly, this may correct the issue:

- Clean the outside of the windshield in front of the rearview mirror.
- Clean the entire front of the vehicle.
- Clean the headlights.

Automatic Emergency Braking (AEB)

⚠ Warning

AEB is an emergency crash preparation feature and is not designed to avoid crashes. Do not rely on AEB to brake the vehicle. AEB will not brake outside of its operating speed range and only responds to detected vehicles.

AEB may not:

- Detect a vehicle ahead on winding or hilly roads.

(Continued)

Warning (Continued)

- Detect all vehicles, especially vehicles with a trailer, tractors, muddy vehicles, etc.
- Detect a vehicle when weather limits visibility, such as in fog, rain, or snow.
- Detect a vehicle ahead if it is partially blocked by pedestrians or other objects.

Complete attention is always required while driving, and you should be ready to take action and apply the brakes and/or steer the vehicle to avoid crashes.

⚠ Warning

AEB may automatically brake the vehicle suddenly in situations where it is unexpected and undesired. It could respond to a turning vehicle ahead, guardrails, signs, and other non-moving objects. To override AEB, firmly press the accelerator pedal, if it is safe to do so.

If equipped, Automatic Emergency Braking may help avoid or reduce the harm caused by front-end crashes. Automatic Emergency Braking also includes Intelligent Brake Assist. When the system detects a vehicle ahead in your path that is traveling in the same direction that you may be about to crash into, it can provide a boost to braking or automatically brake the vehicle. This can help avoid or lessen the severity of crashes when driving in a forward gear. Depending on the situation, the vehicle may automatically brake moderately or hard. Always wear a seat belt and ensure that all passengers are properly restrained. This automatic emergency braking can only occur if a vehicle is detected. This is shown by the Forward Collision Alert vehicle ahead indicator being lit. See *Forward Collision Alert (FCA) System* ⇨ *287*.

The system works when driving in a forward gear between 8 km/h (5 mph) and 80 km/h (50 mph). It can detect vehicles up to approximately 60 m (197 ft).

Automatic Emergency Braking may slow the vehicle to a complete stop to try to avoid a potential crash. If this happens, it may stop the vehicle momentarily. Firmly press the accelerator to continue driving.

NOT FOR RESALE

Intelligent Brake Assist

Warning

IBA may increase vehicle braking in situations when it may not be necessary. You could block the flow of traffic. If this occurs, take your foot off the brake pedal and then apply the brakes as needed.

Warning

Using Automatic Emergency Braking or Intelligent Brake Assist while towing a trailer could cause you to lose control of the vehicle and crash. Turn the system to Alert or Off when towing a trailer. If the vehicle is equipped with Super Cruise, Automatic Emergency Braking and Intelligent Brake Assist may be used while towing a trailer.

Intelligent Brake Assist may activate when the brake pedal is applied quickly by providing a boost to braking based on the speed of approach and distance to a vehicle ahead. Minor brake pedal pulsations or pedal movement during this time is normal and the brake pedal should continue to be applied as needed. Intelligent Brake Assist will automatically disengage only when the brake pedal is released.

Automatic Emergency Braking and Intelligent Brake Assist can be disabled through vehicle settings. To view available settings from the infotainment screen, touch Settings > Vehicle > Collision/Detection Systems.

A system unavailable message may display if:

- The front of the vehicle or windshield is not clean.
- Heavy rain or snow is interfering with object detection.
- There is a problem with the StabiliTrak/ Electronic Stability Control system.

The Automatic Emergency Braking system does not need service.

Intersection Automatic Emergency Braking System

Warning

I-AEB is an emergency crash preparation feature. Do not rely on I-AEB to brake or avoid crashes. I-AEB will not brake outside of its operating speed range and only responds to detected intersecting vehicles. I-AEB may not:

- detect a crossing or oncoming vehicle on winding or hilly roads.
- detect all vehicles, especially vehicles with a trailer, tractors, muddy vehicles, etc.
- detect a vehicle when weather limits visibility, such as in fog, rain, or snow.
- detect a vehicle ahead if it is partially blocked by pedestrians or other objects.

Complete attention is always required while driving, and you should be ready to take action and apply the brakes and/or steer the vehicle to avoid crashes.

NOT FOR RESALE

If equipped, the Intersection Automatic Emergency Braking system may help avoid or reduce the harm caused by front-end crashes with crossing vehicles.

The system works when driving in a forward gear above 15 km/h (9 mph) and less than 80 km/h (50 mph). It can detect oncoming vehicles up to approximately 60 m (197 ft).

Vehicle Crossing the Path Ahead

When there is a crossing vehicle detected approaching from the right or the left side that may lead to a collision, Intersection Automatic Emergency Braking provides a red flashing alert on the windshield and a rapid audible alert or pulses the Safety Alert Seat. See *Advanced Driver Assistance Systems* ⇨ *276*. Intersection Automatic Emergency Braking can provide a boost to braking or automatically brake the vehicle.

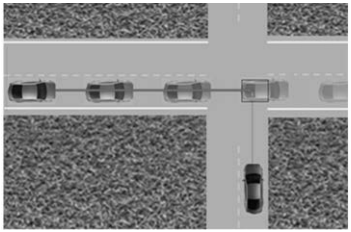

Intersection Automatic Emergency Braking can be set to Off, Alert, or Alert and Brake. To view available settings from the infotainment screen, touch Settings > Vehicle > Collision/ Detection Systems.

Crossing Traffic Alert

When your vehicle approaches an intersecting vehicle too rapidly and there is risk of a collision, a red warning graphic will flash on the windshield. Also, eight rapid high-pitched audible alerts will sound, or the driver seat will pulse five times. The side of the seat that is pulsed and the location of the audible alerts will depend on the direction that the intersecting vehicle is detected from. When this collision alert occurs, the brake system may prepare for driver braking to occur more rapidly which can cause a brief, mild deceleration. Continue to apply the brake pedal as needed.



With Head-Up Display

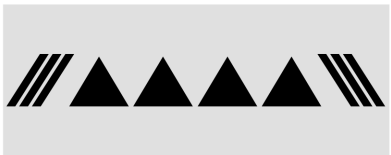

Without Head-Up Display

Turning Across Oncoming Traffic Alert

When your vehicle approaches another detected vehicle too rapidly, a red graphic will flash on the windshield. Also, eight rapid high-pitched audible alerts will sound from the front, or both sides of the Safety Alert Seat will pulse five times. When this Collision Alert occurs, the brake system may prepare for driver braking to occur more rapidly which can cause a brief, mild deceleration. Continue to apply the brake pedal as needed.

NOT FOR RESALE



With Head-Up Display

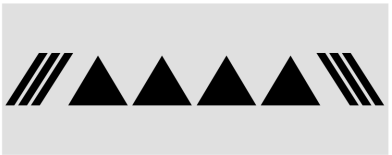

Without Head-Up Display

Automatic Braking

⚠ Warning

I-AEB may automatically brake or increase vehicle braking in situations when it may not be necessary or desired. Your vehicle could block the flow of traffic. I-AEB may respond to stationary or parked vehicles, signs, and other non-moving objects. To override AEB, firmly press the accelerator pedal, if it is safe to do so.

⚠ Warning

Using I-AEB while towing a trailer could cause you to lose control of the vehicle and crash. Turn the system to Alert or Off when towing a trailer.

If Intersection Automatic Emergency Braking detects it is about to crash into an intersecting vehicle, and the brakes have not been applied, it may automatically brake moderately or hard. This can help to avoid some crashes or lessen impact by reducing the speed of the vehicle. Always wear a seat belt and check that all passengers are properly restrained. Intersection Automatic Emergency Braking can automatically brake between 15 km/h (9 mph) and 80 km/h (50 mph). Automatic braking levels may be reduced under certain conditions, such as higher speeds.

Intersection Automatic Emergency Braking may slow the vehicle to a complete stop to try to avoid a potential crash. If this happens, Intersection Automatic Emergency Braking may engage the electric parking brake to hold the vehicle at a stop. Release the electric parking brake or firmly press the accelerator pedal to continue driving.

Intersection Automatic Emergency Braking may also apply the brakes automatically when there is an intersecting vehicle at risk of collision and the system determines that the driver is not braking with sufficient force.

Minor brake pedal pulsations or pedal movement during this time is normal and the brake pedal should continue to be applied as needed.

Cleaning the System

If Intersection Automatic Emergency Braking does not seem to operate properly, cleaning the outside of the windshield in front of the rearview mirror may correct the issue.

Front Pedestrian Braking (FPB) System

⚠ Warning

FPB does not provide an alert or automatically brake the vehicle, unless it detects a pedestrian or bicyclist. FPB may not detect pedestrians, including children, or bicyclists:

(Continued)

NOT FOR RESALE

Warning (Continued)

- When the pedestrian or bicyclist is not directly ahead, fully visible, or standing upright, or when part of a group.
- Due to poor visibility, including nighttime conditions, fog, rain, or snow.
- If the FPB sensor is blocked by dirt, snow, or ice.
- If the headlights or windshield are not cleaned or in proper condition.

Be ready to take action and apply the brakes. For more information, see *Defensive Driving* ⇨ *190*. Keep the windshield, headlights, and FPB sensor clean and in good repair.

The Front Pedestrian Braking system may help avoid or reduce the harm caused by front-end crashes with pedestrians and bicyclists near the forward path of the vehicle when driving in a forward gear. It displays an amber indicator, , when a nearby pedestrian or bicyclist is detected ahead. When approaching a detected pedestrian too quickly, Front Pedestrian Braking provides a red flashing alert on the windshield and rapid audible alerts or pulses the driver seat. Front Pedestrian Braking can provide a boost to braking or automatically brake the vehicle. This system includes Intelligent Brake Assist, and the Automatic Emergency Braking system may also respond to pedestrians or bicyclists. See *Automatic Emergency Braking (AEB)* ⇨ *289*. Always wear a seat belt and ensure that all passengers are properly restrained.

The Front Pedestrian Braking system can detect and alert to pedestrians or bicyclists in a forward gear at speeds between 8 km/h (5 mph) and 80 km/h (50 mph). During daytime driving, the system detects pedestrians or bicyclists up to a distance of approximately 40 m (131 ft). During nighttime driving, system performance is very limited.

Front Pedestrian Braking can be set to Off, Alert, or Alert and Brake through vehicle settings. To view available settings from the infotainment screen, touch Settings > Vehicle > Collision/ Detection Systems.

Detecting the Pedestrian Ahead



Front Pedestrian Braking alerts and automatic braking will not occur unless the system detects a pedestrian or bicyclist. When a pedestrian or bicyclist that may enter the forward path of the vehicle is detected, the pedestrian ahead indicator will display amber.

Front Pedestrian Alert



With Head-Up Display

NOT FOR RESALE

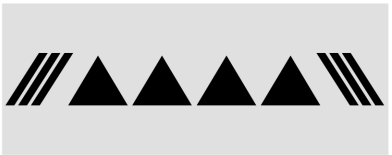

Without Head-Up Display

When the vehicle approaches a pedestrian or bicyclist ahead too rapidly, the red Front Pedestrian Braking alert display will flash on the windshield. Eight rapid high-pitched audible alerts will sound from the front, or both sides of the Safety Alert Seat will pulse five times. When this Pedestrian Alert occurs, the brake system may prepare for driver braking to occur more rapidly which can cause a brief, mild deceleration. Continue to apply the brake pedal as needed. Cruise control may be disengaged when the Front Pedestrian Alert occurs.

Automatic Braking

⚠ Warning

FPB may alert or automatically brake the vehicle suddenly in situations where it is unexpected and undesired. It could falsely alert or brake for objects similar in shape or size to pedestrians or bicyclists, including shadows. This is normal operation and the vehicle does not need service. To override Automatic Braking, firmly press the accelerator pedal, if it is safe to do so.

⚠ Warning

Using the Front Pedestrian Braking system while towing a trailer could cause you to lose control of the vehicle and crash. Turn the system to Alert or Off when towing a trailer.

If Front Pedestrian Braking detects it is about to crash into a pedestrian or bicyclist directly ahead, and the brakes have not been applied, the system may automatically brake moderately or brake hard. This can help to avoid some very low speed pedestrian or bicyclist crashes or reduce pedestrian injury. Front Pedestrian Braking can automatically brake to detected pedestrians or bicyclist between 8 km/h (5 mph) and 80 km/h (50 mph). Automatic braking levels may be reduced under certain conditions, such as higher speeds.

Front Pedestrian Braking may slow the vehicle to a complete stop to try to avoid a potential collision with a pedestrian or bicyclist. If this happens, Automatic Braking may engage the electric parking brake to hold the vehicle at a stop. Release the electric parking brake. A firm press of the accelerator pedal will also release Automatic Braking and the electric parking brake.

Automatic Braking can be disabled through vehicle settings. To view available settings from the infotainment screen, touch Settings > Vehicle > Collision/Detection Systems > Front Pedestrian Detection.

Cleaning the System

If Front Pedestrian Braking does not seem to operate properly, cleaning the outside of the windshield in front of the rearview mirror may correct the issue.

NOT FOR RESALE

Lane Change Alert (LCA)

Warning

LCA does not alert the driver to vehicles outside of the system detection zones, pedestrians, bicyclists, or animals. It may not provide alerts when changing lanes under all driving conditions. Failure to use proper care when changing lanes may result in injury, death, or vehicle damage. Before making a lane change, always check mirrors, glance over your shoulder, and use the turn signals.

If equipped, the Lane Change Alert system is a lane-changing aid that can assist drivers with avoiding lane change crashes with moving vehicles in the side blind zone, or blind spot areas or with vehicles rapidly approaching these areas from behind. When a vehicle is detected in the blind zone, the Lane Change Alert warning display will light up in the corresponding side mirror and will flash if the turn signal is on. The Side Blind Zone Alert system is included as part of the Lane Change Alert system.

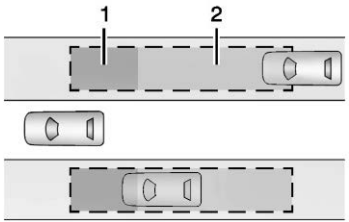

Lane Change Alert Detection Zones

1. Side Blind Zone Alert Detection Zone
2. Lane Change Alert Detection Zone

When towing a trailer, Lane Change Alert feature is disabled. When not towing a trailer, the Lane Change Alert sensor covers a zone of approximately one lane over from both sides of the vehicle, or 3.5 m (11 ft). The height of the zone is approximately between 0.5 m (1.5 ft) and 2 m (6 ft) off the ground. Drivers are also warned of vehicles rapidly approaching this area up to approximately 70 m (230 ft) behind the vehicle.

Trailer Side Blind Zone Area

Warning

Trailer Side Blind Zone Alert does not alert the driver to vehicles outside of the system detection zones, pedestrians, bicyclists, or animals. It may not provide alerts when changing lanes under all driving conditions. Failure to use proper care when changing lanes may result in injury, death, or vehicle damage. Before making a lane change, always check mirrors, glance over your shoulder, and use the turn signals.

If equipped, the Trailer Side Blind Zone Alert system is a lane-changing aid that assists drivers with avoiding crashes that occur with moving vehicles in the side blind zone, or blind spot areas. The trailer side blind zone area adds the blind zone area along the side of a trailer that the host vehicle is pulling.

When the vehicle is in a forward gear, the left or right side mirror display will light up if a moving vehicle is detected in that trailer blind zone. If the turn signal is activated and a vehicle is also detected on the same side, the display will flash as an extra warning not to change lanes.

NOT FOR RESALE

Since this system is part of the Lane Change Alert system, read the entire Lane Change Alert section before using this feature.

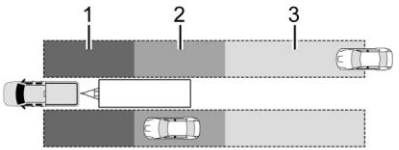

Trailer Side Blind Zone Alert Detection Zones

1. Side Blind Zone Alert Detection Zone
2. Trailer Side Blind Zone Alert Detection Zone
3. Lane Change Alert Detection Zone

The Side Blind Zone Alert warning area starts at approximately the middle of the vehicle and goes back 5 m (16 ft). The Trailer Side Blind Zone Alert warning area starts at approximately 3 m (10 ft) to the trailing edge of the vehicle and goes back up to 21 m (69 ft) behind the vehicle. The maximum trailer length is 12 m (39 ft).

How the System Works

The Lane Change Alert/Trailer Side Blind Zone Alert symbol lights up in the side mirrors when the system detects a moving vehicle in the next lane over that is in the trailer side blind zone. This indicates it may be unsafe to change lanes. Before making a lane change, check the Side Blind Zone Alert display, check mirrors, glance over your shoulder, and use the turn signals.



Left Side Mirror Display



Right Side Mirror Display

When the vehicle is started, both outside mirror Lane Change Alert/Trailer Side Blind Zone Alert displays will briefly come on to indicate the system is operating. When the vehicle is in a forward gear, the left- or right-side mirror display will light up if a moving vehicle is detected in that blind zone. If the turn signal is activated in the same direction as a detected vehicle, this display will flash as an extra warning not to change lanes.

Lane Change Alert/Trailer Side Blind Zone Alert displays may not come on when passing a vehicle quickly, or when passing a stopped vehicle. Lane Change Alert/Trailer Side Blind Zone Alert may alert to objects attached to the vehicle, such as a bicycle, or object extending out to either side of the vehicle or trailer. This is normal system operation; the vehicle does not need service.

Lane Change Alert/Trailer Side Blind Zone Alert can be disabled through vehicle settings. To view available settings from the infotainment screen, touch Settings > Vehicle > Collision/ Detection Systems. If Side Blind Zone Alert is disabled by the driver, the Trailer Side Blind Zone Alert mirror displays will not light up.

When the System Does Not Seem to Work Properly

Lane Change Alert/Trailer Side Blind Zone Alert displays may not come on when passing a vehicle quickly, or when passing a stopped vehicle. The Lane Change Alert/Trailer Side Blind Zone Alert detection zones that extend back from the side of the vehicle do not move further back when a trailer is towed. Use caution while changing lanes when towing a trailer. Lane Change Alert/Trailer Side Blind Zone Alert may alert to objects attached to the vehicle, such as a trailer, bicycle, or object

NOT FOR RESALE

extending out to either side of the vehicle or trailer. This is normal system operation; the vehicle does not need service.

Lane Change Alert/Trailer Side Blind Zone Alert may not always alert the driver to vehicles in the side blind zone, especially in wet conditions. The system does not need to be serviced. The system may light up due to guardrails, signs, trees, shrubs, and other non-moving objects. This is normal system operation; the vehicle does not need service.

Lane Change Alert/Trailer Side Blind Zone Alert may not operate when the Lane Change Alert/ Trailer Side Blind Zone Alert sensors in the left or right corners of the rear bumper are covered with mud, dirt, snow, ice, or slush, or in heavy rainstorms. For cleaning instructions, see "Washing the Vehicle" under *Exterior Care* ⇨*400*. If the Driver Information Center displays the system unavailable message after cleaning both sides of the vehicle toward the rear corners of the vehicle, see your dealer.

If the Driver Information Center displays the system unavailable message after cleaning both sides of the vehicle toward the rear corners of the vehicle, see your dealer.

If the Lane Change Alert/Trailer Side Blind Zone Alert displays do not light up when vehicles are in the blind zone and the system is clean, the system may need service. Take the vehicle to your dealer.

When Trailer Side Blind Zone Alert is disabled for any reason other than the driver turning it off, the Trailer Side Blind Zone Alert On option will not be available on the personalization menu.

Driving with a Trailer

Although this system is intended to help drivers avoid lane change crashes, it does not replace driver vision and therefore should be considered a lane change aid. Even with the Trailer Side Blind Zone Alert system, the driver must check carefully for objects outside of the reporting zone (e.g., a fast approaching vehicle) or vehicle along the side of the trailer before changing lanes.

Use caution while changing lanes when towing a trailer.

Side Bicycle Detection

If equipped, the system may detect a bicyclist approaching from the side or rear of the vehicle. If this occurs, an audible alert will sound in the direction of the detection, and the Safety Alert Seat will pulse if enabled through vehicle settings. To view available settings from the infotainment screen, touch Settings > Vehicle > Collision/Detection Systems.

Bicyclist Detection is available when the vehicle is in D (Drive), P (Park), and for a short time after the vehicle is turned off.

If the vehicle detects a bicyclist when it is off, a Driver Information Center message may display and alert to the direction of the detection. In some cases, an Unavailable message may display. This is normal and does not mean that the system is broken.

Detection Zones

When the vehicle is in P (Park) or is turned off, a bicyclist can be detected 11 m (36 ft) behind the vehicle or 10 m (33 ft) to the side of the vehicle.

When the vehicle is in D (Drive), a bicyclist can be detected 3 m (10 ft) behind the vehicle or to the side of the vehicle.

NOT FOR RESALE

Turning the Feature On or Off

Bicyclist Detection can be turned on or off through vehicle settings. To view available settings from the infotainment screen, touch Settings > Vehicle > Collision/ Detection Systems.

Blind Zone Steering Assist (BZSA)

⚠ Warning

Do not rely on Blind Zone Steering Assist (BZSA) to prevent crashes. This system does not replace the need to pay attention and drive safely. Failure to use proper care when driving may result in vehicle damage, injury, or death.

- BZSA performance may be affected by weather and road conditions.
- BZSA does not provide steering assistance to avoid a vehicle that is in, or has entered, your lane of travel.
- BZSA will not prevent a towed trailer from crossing into the adjacent lane. Always monitor the trailer position

(Continued)

Warning (Continued)

while towing to ensure it is in the same lane as your vehicle. BZSA is only designed to detect when your vehicle unintentionally crosses detected lane lines.

If equipped, the Blind Zone Steering Assist system can detect a potential crash with a moving vehicle in the lane you are entering. It provides a brief, urgent turn of the steering wheel to alert you to take action to avoid a collision.

Blind Zone Steering Assist works with Lane Keep Assist and Lane Change Alert. It operates when the vehicle is in a forward gear, and only when Lane Keep Assist and Lane Change Alert are enabled and able to assist. See *Lane Keep Assist (LKA)* ⇨ *301*. See *Lane Change Alert (LCA)* ⇨ *295*.

Blind Zone Steering Assist will provide a steering correction when your vehicle is about to leave the current lane of travel, with the possibility of a collision with a vehicle in the adjacent lane. This steering correction happens closer to the center of the lane and has a stronger steering correction than Lane Keep Assist. Unlike Lane Keep Assist, the steering correction with Blind Zone Steering Assist will happen even if your turn signal is on in the direction of lane departure.

In addition to the Blind Zone Steering Assist steering intervention, the  will turn amber, six audible alerts or six seat pulses will occur, and  or  will flash on the outside rear view mirror.

Traffic Sign Assistant

Caution

The system is intended to assist the driver within a defined speed range to discern certain traffic signs. Always pay attention to posted speed limit signs.

Do not ignore traffic signs which are not displayed by the system.

The system does not discern any signs other than the conventional traffic signs that might give or end a speed limit. It may not detect some electronic speed signs.

(Continued)

NOT FOR RESALE

Caution (Continued)

Depending on the weather conditions or problems with traffic signs, a traffic sign may not be recognized or a sign different from the actual traffic sign may be displayed.

Do not let this special feature tempt you into taking risks when driving.

Always adapt vehicle speed to the road conditions.

Driver assistance systems do not relieve the driver from full responsibility for vehicle operation.

If equipped, Traffic Sign Assistant recognizes designated traffic signs via the front camera located behind the windshield in front of the interior rear view mirror, and displays the detected speed limit in the Driver Information Center. Additionally, speed limit information from the navigation system map database may be used.

Traffic signs that are detected are:

- Speed Limit
- Conditional Signs

Display Indication

The currently detected speed limit is displayed in the Driver Information Center and remains displayed until a new speed limit is detected, or an end of speed limit indication is detected. Depending on the vehicle, the current valid speed limit is permanently displayed on the Driver Information Center or in the upper left of the instrument cluster.

A **(--)** symbol in a frame indicates that a speed limit is not available for this road segment.

A **(/)** symbol in a frame indicates that the feature is turned off or has failed.

See *Instrument Cluster* ⇨ *112*.

Alert Function

If equipped, an audible alert may sound and the displayed speed sign may flash when you have exceeded the indicated speed limit by a certain amount, or if a new speed limit is detected.

The alert function can be turned on or off. To view available settings from the infotainment screen, touch Settings > Vehicle > Speed Assist.

Each time the vehicle is started, the customization options may be enabled by default.

Navigation System Traffic Sign Detection

The currently displayed sign can either originate from sign detection using the camera, or from the navigation system map data. If the currently displayed sign originates from map data and the map information changes, a new sign will be displayed. This may lead to detection of a new sign although no sign on the road may have been passed. If the map data is unavailable, Traffic Sign Assistant will turn off automatically.

Limitations

Traffic sign memory may not operate correctly if:

- The area of the windshield, where the front camera is located, is not clean or is affected by foreign objects, e.g. stickers, window tinting, etc.
- Traffic signs are completely or partially covered, are too low or high or difficult to discern.
- Traffic signs are incorrectly mounted or are damaged.
- Traffic signs do not comply with the approved traffic sign standards.

NOT FOR RESALE

- The speed limit is displayed by certain types of electronic speed signs.
- There are adverse environmental conditions, e.g. heavy rain, snow, direct sunlight or shadows.
- The headlights are dirty or not correctly aligned when driving at night.
- The navigation map data is out of date.
- The navigation map is unavailable.
- The audio system is not functioning properly.

Driver Attention Assist

If equipped, Driver Attention Assist alerts the driver to pay closer attention to the road ahead. Driver Attention Assist uses a camera-based Driver Monitoring System. The Driver Monitoring System on the steering column continually monitors the driver's head movements and eye gaze location to determine if the driver is drowsy or distracted. Depending on the level of the driver's distraction or drowsiness, Driver Attention Assist will provide visual warnings, audible alerts, and Safety Alert Seat vibrations, if equipped, to gently guide the driver to refocus on the driving task.

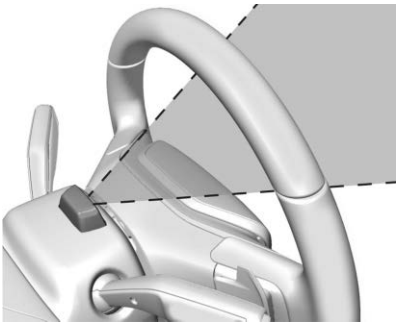

Sunglasses, hats, or other types of clothing that cover head or facial features may interfere with camera performance. To improve camera performance, raise or lower the steering wheel, wear lighter tinted glasses, or change the seat position.

Driver Attention Assist does not record video or audio. It is only active while driving with the feature enabled.

How to Activate Driver Attention Assist

The feature can be enabled or disabled through vehicle settings. To view available settings from the infotainment app screen, select Settings > Vehicle > Driver Attention Assist.

Distracted Driving

When the driver's attention is not on the road, Driver Attention Assist will send visual and audible alerts, or Safety Alert Seat vibrations.

If the driver does not return their attention to the road ahead and displays unresponsive behavior, the system will engage multiple Advanced Driver Assistance Systems, bring the vehicle to a stop, and call OnStar Emergency to get aid to the driver as soon as possible. See *Lane Keep Assist (LKA)* ⇨ *301* and *Automatic Emergency Braking (AEB)* ⇨ *289*.

Drowsy Driving

The system monitors the driver for signs of fatigue, such as yawning, slower blinking frequency, or gaze fixation. Driver Attention Assist provides visual and audible alerts, or Safety Alert Seat vibrations. When the system detects that the driver is greatly struggling to stay awake, the alerts will be more intense and frequent. While a driver is detected to

NOT FOR RESALE

be only be drowsy, Driver Attention Assist may activate or adjust settings for Advanced Driver Assistance Systems, even if they have been disabled, only for the duration that the drowsiness is detected. The activated features will revert to their previous selections once the driver is no longer detected to be showing signs of fatigue.

When the maximum drowsiness alert occurs, the driver will be presented with the following options on the infotainment screen:

- Phone a Friend
- Start a Playlist
- Navigate to Nearest Point of Interest

Select an option from the list and follow the instructions displayed on infotainment screen.

If the driver's eyes are closed, and they are detected to be asleep, the system will engage multiple Advanced Driver Assistance Systems, bring the vehicle to a stop, and call OnStar Emergency to get aid to the driver as soon as possible.

See *Lane Keep Assist (LKA)* ⇨ *301* and *Automatic Emergency Braking (AEB)* ⇨ *289*.

Cleaning the Camera

The camera lens cover on the steering column may become dirty over time. If this occurs, clean the lens cover with a soft cloth sprayed with glass cleaner. Wipe the lens gently, then dry it. Never use abrasive cloths, cleaners, or corrosive chemicals of any kind on the lens cover.

Limitations

Some factors can impact the performance of the Driver Attention Assist feature, causing it to not to function as intended. These include (but are not limited to):

- Damage to the Driver Monitoring System, camera, or lens.
- The camera being blocked by the steering wheel, hands, or objects.

If there is a problem with the system, a Driver Information Center message or icon in the instrument cluster may display.

Lane Keep Assist (LKA)

⚠ Warning

The LKA system does not continuously steer the vehicle. It may not keep the vehicle in the lane or give a Lane Departure Warning (LDW) alert, even if a lane marking is detected.

The LKA and LDW systems may not:

- Provide an alert or enough steering assist to avoid a lane departure or crash.
- Detect lane markings under poor weather or visibility conditions. This can occur if the windshield or headlights are blocked by dirt, snow, or ice, if they are not in proper condition, or if the sun shines directly into the camera.
- Detect road edges.
- Detect lanes on winding or hilly roads.

If LKA only detects lane markings on one side of the road, it will only assist or provide an LDW alert when approaching the lane on the side where it has detected

(Continued)

NOT FOR RESALE

Warning (Continued)

a lane marking. Even with LKA and LDW, you must steer the vehicle. Always keep your attention on the road and maintain proper vehicle position within the lane, or vehicle damage, injury, or death could occur. Always keep the windshield, headlights, and camera sensors clean and in good repair. Do not use LKA in bad weather conditions.

⚠ Warning

Using Lane Keep Assist while towing a trailer or on slippery roads could cause loss of control of the vehicle and a crash. Turn the system off.

If equipped, Lane Keep Assist may help avoid crashes due to unintentional lane departures. This system uses a camera to detect lane markings. The system can be ready to assist above approximately 50 km/h (31 mph). Lane Keep Assist may assist by gently turning the steering wheel if the vehicle approaches a detected lane marking. It may also provide a Lane Departure Warning alert if the vehicle unintentionally crosses a detected lane marking. Lane Keep Assist will not assist or alert if the turn signal is active in the direction of the lane departure, or if it detects that you are accelerating, braking, or actively steering. Lane Keep Assist can be overridden by turning the steering wheel. If the system detects you are steering intentionally across a lane marker, the Lane Departure Warning may not be given. Do not expect the Lane Departure Warning to occur when you are intentionally crossing a lane marker.

How the System Works

The Lane Keep Assist camera sensor is on the windshield ahead of the rearview mirror.

To turn Lane Keep Assist on and off, press on the center stack.

Lane Keep Assist may not be available in extremely cold temperatures of less than approximately −30° F (−34° C).

When on, is white and changes green if Lane Keep Assist is available to assist and provide Lane Departure Warning alerts. It may assist by gently turning the steering wheel and display as amber if the vehicle approaches a detected lane marking without using a turn signal in that direction. It may also provide an Lane Departure Warning alert by flashing amber as the lane marking is crossed. Additionally, there may be three audible alerts on the right or left, depending on the lane departure direction.

Take Steering

The Lane Keep Assist system does not continuously steer the vehicle. If Lane Keep Assist does not detect active driver steering, an audible alert or Driver Information Center message may be provided. Move the steering wheel to dismiss.

When the System Does Not Seem to Work Properly

The system performance may be affected by:

- Close vehicles ahead.
- Sudden lighting changes, such as when driving through tunnels.
- Banked roads.
- Roads with poor lane markings, such as two-lane roads.

NOT FOR RESALE

If the Lane Keep Assist system is not functioning properly when lane markings are clearly visible, cleaning the windshield may help.

A system unavailable message may display if the camera is blocked. The Lane Keep Assist system does not need service.

Lane Keep Assist assistance and/or Lane Departure Warning alerts may occur due to tar marks, shadows, cracks in the road, temporary or construction lane markings, or other road imperfections. This is normal system operation; the vehicle does not need service. Turn Lane Keep Assist off if these conditions continue.

Surround Vision Recorder

If equipped, Surround Vision Recorder may record video of the vehicle surroundings continuously, up to two hours, while automatically overwriting the oldest videos to continue recording.

When the feature is enabled, the recordings are saved on a USB device with the specifications of:

- 64GB storage capacity, with at least 32GB of storage available.
- USB type C or A.
- USB3.0 or greater.

It is recommended to use a single USB device specifically for Surround Vision Recorder. This device must be plugged into a data-enabled USB port.

Event recording features may be offered after a future software update to your vehicle. When available, you will learn about the new features through the application.

Security Recording

If Security Recording is enabled, the cameras automatically record the vehicle's exterior and, if equipped, the interior when the theft alarm is triggered. This recording will be a video of after the alarm becomes activated.

Configuring the System

To access settings, and the recordings playlist, select Recordings on the infotainment app screen.

Always review the settings carefully before use.

Limitations

Certain features may not be available at all locations and under all vehicle conditions. No sound is included in the video footage. Recording will not occur in valet mode or while the vehicle is off.

Features are subject to change. Some features may be enabled with an additional subscription service. You will be informed which features apply after the software update.

When using Surround Vision Recorder, follow all local laws and regulations in your jurisdiction.

Untrusted Media Devices

Do not use untrusted mobile or media devices. They may negatively impact system operation and performance.

Fuel

Top Tier Fuel (Gasoline)

GM recommends the use of TOP TIER Approved Gasoline to keep the engine clean, reduce engine deposits, and maintain optimal vehicle performance. Look for the TOP TIER Logo

NOT FOR RESALE

or see www.toptiergas.com for a list of TOP TIER Approved Gasoline marketers and applicable countries.

TOP TIER Approved Gasoline

CATÉGORIE SUPÉRIEURE Essence Approuvée

Top Tier Fuel (Diesel)

GM recommends the use of TOP TIER Approved Diesel Fuel to keep the engine clean, reduce engine deposits, and maintain optimal vehicle performance. Look for the TOP TIER Logo or see www.toptiergas.com for a list of TOP TIER Approved Diesel Fuel marketers and applicable countries.

TOP TIER Approved Diesel

CATÉGORIE SUPÉRIEURE Diesel Approuvé

Recommended Fuel (L4B 2.7L L4 and L76 5.7L V8 Gasoline Engines)



Regular unleaded gasoline meeting ASTM specification D4814 with a posted octane rating (R+M)/2 of 87 or greater is recommended. Do not use gasoline with a posted octane rating of less than 87, as this will result in reduced performance and driveability. If heavy knocking is heard when using gasoline rated at 87 or greater, the engine needs service.

Do not use any fuel labeled E85 or FlexFuel. Do not use gasoline with ethanol levels greater than 15% by volume.

Recommended Fuel (L78 6.6L V8 Gasoline Engine)



Premium unleaded gasoline meeting ASTM specification D4814 with a posted octane rating (R+M)/2 of 91 or greater is recommended. If unavailable, unleaded gasoline with a posted octane rating of 87 may be used, but will result in reduced performance and driveability. If heavy knocking is heard when using gasoline rated at 91 or greater, the engine needs service.

Do not use any fuel labeled E85 or FlexFuel. Do not use gasoline with ethanol levels greater than 15% by volume.

NOT FOR RESALE

Recommended Fuel (Diesel)

The selection of a high-quality fuel is important for maintaining optimum vehicle performance. Diesel fuel should meet or exceed the minimum requirements in the most current versions of the local fuel standards.

Use Ultra Low Sulfur Fuel, which refers to fuel with less than 15 ppm sulfur.

Do not use a diesel blend containing more than 20% biodiesel by volume.

Caution

Use of fuel that does not comply with the required technical standards can lead to engine power loss, increased wear, or engine damage and may void your warranty.

Some improper fuels are:

- Diesel fuel with the addition of gasoline.
- Diesel fuel mixed with engine oil or automatic transmission fluid.

(Continued)

Caution (Continued)

- Triglyceride fuels, such as raw vegetable oil or animal fat, in any form, including with blends of diesel or biodiesel.
- Marine diesel fuel and fuel oils.
- Diesel-water emulsions, such as Aquazole.
- Aftermarket diesel fuel additives, which contain alcohols, organo-metallic additives, or water emulsifiers.

Caution

If the vehicle is accidentally refueled with gasoline, do not continue driving the vehicle. Driving the vehicle will damage the fuel system. Have the vehicle towed to a qualified technician to have the gasoline removed from the tank and fuel system. Refuel with Ultra Low Sulfur Diesel fuel. It is also recommended to have the fuel system flushed with Ultra Low Sulfur Diesel, to ensure all gasoline is removed.

Some conditions, such as dirty fuel, may decrease fuel filter life and a CHANGE FUEL FILTER message may come on in the Driver Information Center.

Climate Grade Diesel Fuels

At temperatures below 0 °C (32 °F), avoid using biodiesel blends above 5% by volume. Using such a fuel may cause fuel filter plugging, system gelling, and freezing, which may adversely impact vehicle starting.

Severe winter grade diesel fuel, such as 1-D diesel fuel or Arctic grade diesel fuel, can be used in extreme cold temperatures (below −18 °C or 0 °F); however, doing so will reduce power and fuel economy. Avoid using severe winter grade fuel in warm or hot climates. It can result in stalling, poor starting, and damage to the fuel injection system.

Fuels improperly blended for cold temperature operation may result in restricted fuel filters. The vehicle is equipped with a fuel heating system to prevent gelling or waxing of conventional diesel fuel and biodiesel blends, but may not prevent all cases.

In case of severe winter conditions, the fuel filter may become clogged by wax naturally present in the fuel. To unclog it, move the

NOT FOR RESALE

vehicle to a warm garage area and allow the filter to warm up. The fuel filter may need to be replaced. See *Fuel Filter Replacement (Diesel)* ⇨ *311*.

Renewable Diesel Fuel

Renewable diesel is biomass-based diesel fuel also known as hydrotreated vegetable oil. Renewable diesel is not biodiesel and is chemically identical to conventional diesel fuel. The use of renewable diesel is approved for this vehicle and it helps reduce greenhouse gas emissions while also providing performance benefits such as a high cetane number and enhanced storage stability.

Renewable diesel can be blended with conventional petroleum diesel in any proportion, from 1% to 100% by volume. It is also frequently combined with biodiesel, typically up to 20% by volume to produce fully renewable fuel blends.

Renewable diesel has a slightly lower energy density and using it at 100% may increase fuel consumption by approximately 3–5%. It's cold weather properties can be adjusted for local conditions. Contact suppliers for grade details. Standard cold flow additives may work less effectively in renewable diesel than in petroleum diesel.

Fuel Standards - US

- Pure renewable diesel (R100) and it's blends with conventional diesel must, at a minimum, comply with ASTM D975 to be used in diesel engines.
- Blends of renewable diesel with biodiesel:
  - Up to 5% biodiesel by volume must also meet ASTM D975.
  - Blends containing 6–20% biodiesel by volume must comply with ASTM D7467, the specification for diesel fuel containing biodiesel blends (B6-B20).

At the pump, renewable diesel and renewable diesel blends are clearly labeled. Common examples include:

- Renewable Diesel (R100)
- Diesel containing up to 20% biodiesel and renewable diesel (B20/R80)

TOP TIER Diesel

GM recommends the use of TOP TIER Approved Diesel Fuel to keep the engine clean, reduce engine deposits, and maintain optimal vehicle performance. See *Top Tier Fuel (Gasoline)* ⇨ *303* *Top Tier Fuel (Diesel)* ⇨ *304*.

Prohibited Fuels (Gasoline)

Caution

Do not use fuels with any of the following conditions; doing so may damage the vehicle and void its warranty:

- For vehicles which are not FlexFuel, fuel labeled greater than 15% ethanol by volume, such as mid-level ethanol blends (16 – 50% ethanol), E85, or FlexFuel.
- Fuel with any amount of methanol, methylal, and aniline. These fuels can corrode metal fuel system parts or damage plastic and rubber parts.

(Continued)

NOT FOR RESALE

Caution (Continued)

- Fuel containing metals such as methylcyclopentadienyl manganese tricarbonyl (MMT), which can damage the emissions control system and spark plugs.
- Fuel with a posted octane rating of less than the recommended fuel. Using this fuel will lower fuel economy and performance.

Fuels in Foreign Countries (Gasoline)

The U.S., Canada, and Mexico post fuel octane ratings in Anti-Knock Index (AKI). For fuel not to use in a foreign country, see *Prohibited Fuels (Gasoline)* ⇨ *306*.

Fuel Additives (Gasoline)

TOP TIER Approved Gasoline is highly recommended for use with your vehicle. If your country does not have TOP TIER Approved Gasoline, add ACDelco Fuel System Cleaner to the vehicle's gasoline fuel tank at every oil change or 12 000 km (7,500 mi), whichever occurs first. TOP TIER Approved Gasoline and ACDelco Fuel System Cleaner will help keep your vehicle's engine fuel deposit free and performing optimally.

Fuel Additives (Diesel)

TOP TIER Approved Diesel is highly recommended for use with your vehicle. If your area does not have TOP TIER Approved Diesel, GM recommends the use of ACDelco Fuel System Cleaner. This will help maintain optimal engine performance. GM does not recommend other aftermarket diesel additives.

If low-quality diesel is used for refueling, GM recommends adding ACDelco Fuel System Cleaner to help clean engine deposits. This is available at your GM dealer.

Biodiesel

Biodiesel is a renewable fuel produced from vegetable oils or animal fats that have been chemically modified to make it compatible with diesel fuel.

Caution

Do not use home-made biodiesel or home test kits because the quality cannot be verified by approved scientific methods. Do not use raw vegetable oil or other unmodified bio-oils, fats, or blends of vegetable oil with diesel. They could damage the fuel system and engine, and damages would not be covered by the vehicle warranty.

Biodiesel Blends

Fuels with a biodiesel content up to 20% by volume may be used (e.g., named B20). Only use biodiesel blends up to 20% by volume that comply with your country's or region's fuel standards.

Caution

Do not use blends containing more than 20% biodiesel. Any engine, fuel system, or exhaust after-treatment system damage would not be covered by the vehicle warranty.

NOT FOR RESALE

As a renewable fuel, biodiesel provides some environmental benefits. However, biodiesel has unique properties and needs to be handled differently than diesel fuel. Its use presents additional risks and may not be appropriate in all situations. Certain vehicle operating modes increase these risks and should be avoided.

Biodiesel fuel quality degrades with time and exposure to high temperature quicker than Ultra Low Sulfur Diesel fuel. More frequent refueling provides the best opportunity to have a supply of fresh fuel. Storage at hot ambient temperatures will accelerate biodiesel degradation.

If the vehicle is not driven often and uses little fuel, or if it is stored for extended periods of time, avoid the use of biodiesel blended fuels above 5% by volume. When the vehicle is stored for longer than one month, it should be run out of biodiesel to below one-quarter tank, refueled with biodiesel-free fuel, and driven several kilometers (miles) before storage.

Cold Weather Operation (Diesel)

In cold weather, the fuel filter may become clogged by wax naturally present in the fuel. To unclog it, move the vehicle to a warm garage area and allow the filter to warm up. The fuel filter may need to be replaced. See *Fuel Filter Replacement (Diesel)* ⇨ *311*.

At temperatures below 0 °C (32 °F), it is recommended to avoid using biodiesel blends above 5% blend. This blend may cause fuel filter plugging, system gelling, and freezing that may affect vehicle starting. You may need to turn the ignition on and off a few times before the vehicle will start. Also, idle the vehicle for a couple of minutes before accelerating.

It is recommended to use Ultra Low Sulfur No. 1-D diesel fuel or a blend of No. 1-D and No. 2-D diesel fuel to enhance vehicle operation in cold weather at temperatures below 0 °C (32 °F). Use of No. 1-D diesel fuel may lower the fuel economy. For additional information for better cold weather operation, see *Engine Heater* ⇨ *213*.

Water in Fuel

⚠ Warning

Diesel fuel containing water is still combustible. You or others could be burned. If the fuel needs to be drained, keep sparks, flames, and smoking materials away from the mixture.

Caution

Water in the diesel fuel can corrode internal components of the fuel system and lead to severe damage. It can also support fungus or bacteria growth, which can damage the fuel system. Even with a diesel fuel biocide, the fuel system may still need to be cleaned. Your dealer can advise of the appropriate solution.

If the fuel tank needs to be purged to remove water, see your dealer or a qualified technician. Improper purging can damage the fuel system.

NOT FOR RESALE

Improper fuel tank inspection or cleaning, or contaminated fuel from suppliers, can cause water to be pumped into the fuel tank along with the diesel fuel. If a WATER IN FUEL SERVICE REQUIRED message displays, the water must be drained immediately.

Water in Fuel Troubleshooting

Caution
Driving with this message on can damage the fuel injection system and the engine. If the message comes on right after a refuel, water was pumped into the fuel tank. Turn off the engine and drain the water immediately.

If the WATER IN FUEL SERVICE REQUIRED message comes on:

Problem	Recommended Action
Message displays but goes off during the ignition cycle.	The fuel filter is partially filled with water. Drain the water as soon as possible. See "Removing Water from the Fuel Filter" following.
Message displays and stays on.	Drain the fuel filter immediately. If no water can be drained, and the temperature is below freezing, then water may be frozen in the filter. Move the vehicle to a warm location to thaw the water, then drain the fuel. If water still does not drain, see your dealer.
Immediately after refueling, message displays and stays on.	A large amount of water is in the fuel tank. Drain the fuel filter immediately. If the message stays on or comes back on without refueling, then fuel tank purging is required. See your dealer. If the message displays and the engine stalls or runs rough, do not drive until the water contaminated fuel is drained.

Removing Water from the Fuel Filter

To drain water:

1. Turn the engine off and apply the parking brake.
2. Remove any remote keys from vehicle. Ensure the remote keys are at least 9 m (30 ft) away from the vehicle for 15 minutes.

NOT FOR RESALE

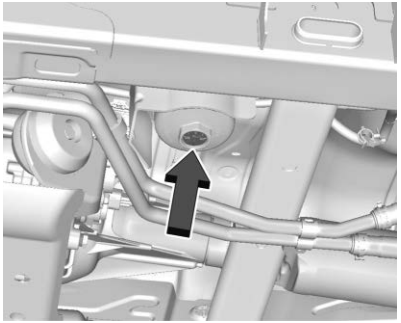

3. Place a container under the filter drain valve. The filter drain valve is on the bottom of the fuel filter. The filter drain valve is under the vehicle on the driver side, inside the frame rail.
4. Turn the fuel/water separator drain plug counterclockwise and remove it completely.
5. Bring the remote key back to the vehicle and place the vehicle in Service Mode. See *Ignition Positions* ⇨ *208*.

   The fuel system will prime and flush the filter housing for approximately 30 seconds. The fuel pump will be heard running during this process. If you cannot hear the pump and the drain pan has not collected fue,l turn the vehicle off and proceed to step 6. If you can hear the pump running, proceed to step 7 and turn the vehicle off when the pump stops running.
6. Ensure the vehicle is off. If the fuel system did not prime in step 5, disconnect the battery for 5 minutes. Reconnect the battery and repeat the steps above leaving drain plug removed. Once the battery is reconnected, the fuel pump will try to prime.
7. Ensure the vehicle is off. When fuel has stopped dripping, inspect drain pan for water in the fuel.
8. Reinstall drain plug. Torque the valve to 2 N•m (18 in lb). Excessive torque can damage the seal.
9. Properly dispose of the water contaminated fuel.

   If excessive water is found in the drain pan, repeat this process. If water continues to drain, there may be water contamination in the fuel tank. Contact your dealer for assistance.
10. Place the vehicle in Service Mode for 30 seconds.
11. Start the engine and let it run for a few minutes. During the draining process, air may have entered the fuel system. If the engine stalls, the fuel system may need to be primed. See “Fuel Priming” later in this section.

Fuel Priming

For the fuel system to work properly, the fuel lines must be full of fuel. If air gets in, the fuel lines need to be primed before operating the vehicle.

If air is present, the following may have happened:

- The vehicle ran out of fuel.
- The fuel filter was removed.
- The fuel lines were removed or disconnected.
- The fuel filter water drain valve was opened while the engine was running.

Priming the Fuel System

There is an electric priming pump that will bring fuel to the engine and eliminate air in the fuel lines. To prime the engine:

1. Correct any condition that caused the loss of prime.

NOT FOR RESALE

2. Turn the ignition on for 30 seconds. Do not start the engine. The fuel pump will start priming.
3. Turn the ignition off, then back on, and crank the engine for 15 seconds.
4. If the engine does not start, repeat Steps 2 and 3 until the engine starts.

   If the engine does not start after repeating Steps 2 and 3 three times, turn the ignition off for 60 seconds.
5. Repeat the above steps until the engine starts.
6. If the engine starts, but does not run smoothly, increase the engine speed slightly.
7. If the engine starts and runs but stalls again, turn the ignition off for 60 seconds.
8. When the engine starts, let it idle for a few minutes and check the filter for any leaks.

Running Out of Fuel

If the engine has stalled due to running out of fuel, try the following steps to restart it:

1. If parked on a level surface, add at least 7.6 L (2 gal) of fuel. Up to 18.9 L (5 gal) may be needed if parked on a slope.

⚠ Warning

Diesel fuel is combustible. It could start a fire if it gets on hot engine parts. You could be burned. Catch any fuel from the air bleed valve, and wipe up any spilled fuel with a cloth.

2. **Diesel Only** - Follow the fuel priming procedure. See *Water in Fuel* ⇨ *308*.
3. Turn the ignition to START for 10 to 15 seconds at a time until the engine starts. If the engine tries to run, but does not run smoothly, increase the rpm slightly by using the accelerator pedal. This will help force air through the system.
4. **Diesel Only** - Return to Step 2 if the engine stalls and will not restart.
5. After a few attempts, if the engine still does not start, see your dealer.

Fuel Filter Replacement (Diesel)

⚠ Warning

Diesel fuel is flammable. It could start a fire if something ignites it, and people could be burned. Do not let it get on hot engine parts, and keep matches or other ignition sources away.

The fuel filter is on the driver side, inside the frame rail.

Prior to opening the filter and cap assembly or servicing the filter, clean the outside of the cap with a clean rag to ensure no dust or dirt gets inside the filter.

To replace the fuel filter:

1. Apply the parking brake.
2. Drain any water from the filter. See "Removing Water from the Fuel Filter" in *Water in Fuel* ⇨ *308*.

   Keep the engine off until the procedure is completed.

NOT FOR RESALE

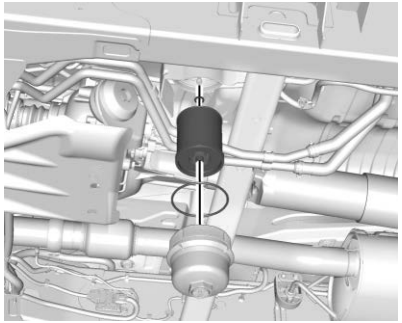

3. Remove the filter element cap by turning it counterclockwise.
4. Remove the filter element. Inspect the inside of the filter cap and sealing surface. Ensure there is no dirt or debris. Wipe clean if necessary.
5. Install the new filter element and o-ring.
6. Reinstall and tighten the filter cap to the housing. Torque the filter cap to 25 N•m (18 lb ft).
7. Use the fuel filter priming procedure to prime the fuel filter. See "Fuel Priming" in *Water in Fuel* ⇨ *308*.
8. Start the engine and let it idle for five minutes. Check the fuel filter and air bleed valve for leaks.
9. Reset the fuel filter monitor. See *Driver Information Center (DIC)* ⇨ *131*.

Filling the Tank (Gasoline)

An arrow on the fuel gauge indicates which side of the vehicle the fuel door is on. See *Fuel Gauge* ⇨ *114*.

⚠ Warning

Fuel vapors and fuel fires burn violently and can cause injury or death.

Follow these guidelines to help avoid injuries to you and others:

- Read and follow all the instructions on the fuel pump island.
- Turn off the engine when refueling.
- Keep sparks, flames, and smoking materials away from fuel.
- Do not leave the fuel pump unattended.

(Continued)

Warning (Continued)

- Avoid using electronic devices while refueling.
- Do not re-enter the vehicle while pumping fuel.
- Keep children away from the fuel pump and never let children pump fuel.
- Before touching the fill nozzle, touch a metallic object to discharge static electricity from your body.
- Fuel can spray out if the fill nozzle is inserted too quickly. This spray can happen if the tank is nearly full, and is more likely in hot weather. Insert the fill nozzle slowly and wait for any hiss noise to stop before beginning to flow fuel.

NOT FOR RESALE



The capless refueling system does not have a fuel cap.

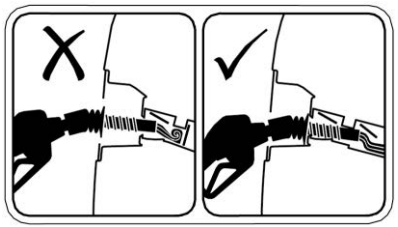

The capless system has two internal flapper doors. To prevent fuel spray, insert the nozzle fully to ensure both doors are open before refueling.

⚠ Warning

Overfilling the fuel tank by more than three clicks of a standard fill nozzle may cause:

- Vehicle performance issues, including engine stalling and damage to the fuel system.
- Fuel spills.
- Under certain conditions, fuel fires.

Be careful not to spill fuel. Wait five seconds after you have finished pumping before removing the fill nozzle. Clean fuel from painted surfaces as soon as possible. See *Exterior Care* ⇨ *400*. Push the fuel door closed.

⚠ Warning

If a fire starts while you are refueling, do not remove the fill nozzle. Shut off the flow of fuel by shutting off the pump or by notifying the station attendant. Leave the area immediately.

Filling the Tank with a Portable Fuel Container

If the vehicle runs out of fuel and must be filled from a portable fuel container:

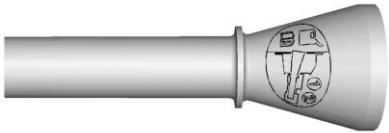

1. Locate the capless funnel adapter.
2. Insert and latch the funnel into the capless fuel system.

⚠ Warning

Attempting to refuel from a portable fuel container without using the funnel adapter may cause fuel spillage and damage the capless fuel system. This could cause a fire. You or others could be badly burned and the vehicle could be damaged.

3. Remove and clean the funnel adapter and return it to the storage location.

NOT FOR RESALE

Filling the Tank (Diesel)

An arrow on the fuel gauge indicates which side of the vehicle the fuel door is on. See *Fuel Gauge* ⇨ *114*. Do not refill the diesel fuel and Diesel Exhaust Fluid (DEF) at the same time.

⚠ Warning

Fuel vapors and fuel fires burn violently and can cause injury or death.

Follow these guidelines to help avoid injuries to you and others:

- Read and follow all the instructions on the fuel pump island.
- Turn off the engine when refueling.
- Keep sparks, flames, and smoking materials away from fuel.
- Do not leave the fuel pump unattended.
- Avoid using electronic devices while refueling.
- Do not re-enter the vehicle while pumping fuel.

(Continued)

Warning (Continued)

- Keep children away from the fuel pump and never let children pump fuel.
- Before touching the fill nozzle, touch a metallic object to discharge static electricity from your body.
- Fuel can spray out if the fill nozzle is inserted too quickly. This spray can happen if the tank is nearly full, and is more likely in hot weather. Insert the fill nozzle slowly and wait for any hiss noise to stop before beginning to flow fuel.

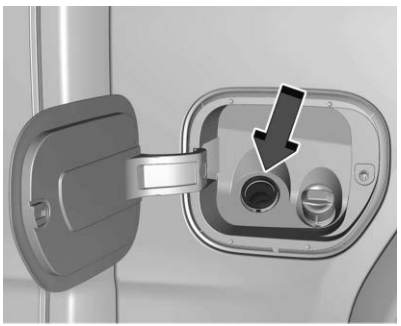

To open the fuel door, push and release the rearward center edge of the door. The capless refueling system does not have a fuel cap.

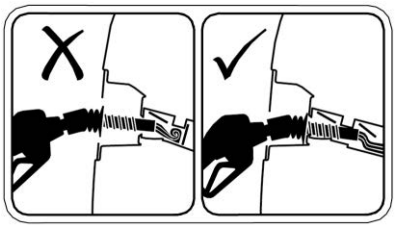

The capless system has two internal flapper doors. To prevent fuel spray, insert the nozzle fully to ensure both doors are open before refueling.

⚠ Warning

Overfilling the fuel tank by more than three clicks of a standard fill nozzle may cause:

- Vehicle performance issues, including engine stalling and damage to the fuel system.
- Fuel spills.
- Under certain conditions, fuel fires.

NOT FOR RESALE

Diesel fuel can foam when filling the tank. The automatic pump nozzle may shut off, even if the tank is not full. Wait for the foaming to stop, and then fill the tank more slowly. Be careful not to spill fuel. Wait five seconds after pumping before removing the fill nozzle. Clean fuel from painted surfaces as soon as possible. See "Exterior Care" under Vehicle Care in the Owner's Manual. Push the fuel door closed.

⚠ Warning

If a fire starts while you are refueling, do not remove the fill nozzle. Shut off the flow of fuel by shutting off the pump or by notifying the station attendant. Leave the area immediately.

Accidental Refueling with Gasoline

Caution

If the vehicle is accidentally refueled with gasoline, do not continue driving the vehicle except to get to a location where it can be stopped safely. Driving the vehicle

(Continued)

Caution (Continued)

will damage the engine. Tow the vehicle for service. Have the gasoline removed from the tank and fuel system.

Filling the Tank with a Portable Fuel Can

If the vehicle runs out of fuel and must be filled from a portable fuel can:

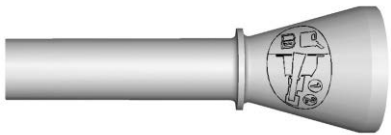

1. Locate the capless funnel adapter.
2. Fully insert the funnel into the capless fuel system.

⚠ Warning

Attempting to refuel from a portable fuel container without using the funnel adapter may cause fuel spillage and damage the

(Continued)

Warning (Continued)

capless fuel system. This could cause a fire. You or others could be badly burned and the vehicle could be damaged.

3. Remove and clean the funnel adapter and return it to the storage location.

Filling a Portable Fuel Container

⚠ Warning

Never fill a portable fuel container while it is in the vehicle. Static electricity discharge from the container can ignite the fuel vapor. You or others could be badly burned and the vehicle could be damaged. To help avoid injury to you and others:

- Dispense fuel only into approved containers.
- Do not fill a container while it is inside a vehicle, in a vehicle's trunk, in a pickup bed, or on any surface other than the ground.

(Continued)

NOT FOR RESALE

Warning (Continued)

- Bring the fill nozzle in contact with the inside of the fill opening before operating the nozzle. Maintain contact until filling is complete.
- Keep sparks, flames, and smoking materials away from fuel.
- Avoid using electronic devices while pumping fuel.
- When transporting a fuel container or other material that can catch fire in the truck bed, secure the container to prevent spills.

Trailer Towing

General Towing Information

⚠ Warning

You can lose control when towing a trailer if the correct equipment is not used or the vehicle is not driven properly. For example, if the trailer is too heavy or the trailer brakes

(Continued)

Warning (Continued)

are inadequate for the load, the vehicle may not stop as expected. You and others could be seriously injured. The vehicle may also be damaged, and the repairs would not be covered by the vehicle warranty. Pull a trailer only if all the steps in the Trailer Towing Supplement have been followed. Ask your dealer for advice and information about towing a trailer with the vehicle.

To find detailed preparation information, refer to the Trailer Towing Supplement online at:

For United States: www.gmc.com/support/vehicle/manuals-guides

For Canada: www.gmccanada.ca/en/support/vehicle/manuals-guides

For Mexico: www.gmc.com.mx/servicios-de-asistencia/manual-de-propietario

To tow a disabled vehicle, see *Transporting a Disabled Vehicle* ⇨ *396*.

To tow the vehicle behind another vehicle such as a motor home, see *Recreational Vehicle Towing* ⇨ *397*.

Conversions and Add-Ons

Add-On Electrical Equipment

⚠ Warning

The Data Link Connector is used for vehicle service and Emission Inspection/Maintenance testing. See *Malfunction Indicator Light (Gasoline Check Engine Light)* ⇨ *119 Malfunction Indicator Light (Diesel Check Engine Light)* ⇨ *121*. A device connected to the Data Link Connector — such as an aftermarket fleet or driver-behavior tracking device — may interfere with vehicle systems. This could affect vehicle operation and cause a crash. Such devices may also access information stored in the vehicle's systems.

Caution

Some electrical equipment can damage the vehicle or cause components to not work and would not be covered by the vehicle warranty. Always check with your dealer before adding electrical equipment.

NOT FOR RESALE

Add-on equipment can drain the vehicle's 12-volt battery, even if the vehicle is not operating.

The vehicle has an airbag system. Before attempting to add anything electrical to the vehicle, see *Servicing the Airbag-Equipped Vehicle* ⇨ *72* and *Adding Equipment to the Airbag-Equipped Vehicle* ⇨ *73*.

For information on wiring auxiliary switches, see www.gmupfitter.com or contact your dealer.

Auxiliary Switches

On-screen auxiliary switches, if equipped, are quick-touch icons that appear within the infotainment system, giving you easy access to some of the features of certain aftermarket accessories installed on the vehicle (off-road lighting, light bars, etc.).

To access the on-screen auxiliary switches, select the Controls icon on the bottom left of the display > Aux Switches.

Use of the on-screen switches requires installation of an auxiliary switch interface module, which is mounted under the hood. See your dealer for purchase and installation of the necessary components. See *Accessories and Modifications* ⇨ *321*.

Customizing the On-Screen Auxiliary Switches

To customize an on-screen auxiliary switch:

1. With the vehicle on and in (P) Park, select Controls > Aux Switches on the infotainment home screen.
2. Select the arrow at the top right of the icon for the switch you want to customize, and then:
   - To create a new label, touch the name field and type in a new label. To save your update, touch ✓ (Done) on the keyboard.
   - To change the icon, touch a new one on the list.
   - Review the additional options listed below the name field. Touch the checkbox next to the option description to enable or disable the option.

     Turn on only while switch is held down: When this option is enabled, the switch will only operate while your finger continues to touch and hold the on-screen switch. This may be useful for accessories that only need to be turned on for short intervals.

     Turn on parking lights while switch is on: When this option is enabled, the vehicle parking lights will automatically turn on while the switch is in use. This may be particularly useful to use for a light bar, as it will help ensure your vehicle remains visible while driving in low-light conditions with the headlights off.
3. Select the BACK icon to save your customizations.

Adding a Snow Plow or Similar Equipment

Caution
Do not exceed 72 km/h (45 mph) with a snow plow mounted to the vehicle. The vehicle could overheat and be damaged.

Before installing a snow plow on the vehicle, follow these guidelines:

NOT FOR RESALE

Caution

If the vehicle does not have the snow plow prep package, RPO VYU, adding a plow can damage the vehicle, and the repairs would not be covered by the vehicle warranty. Unless the vehicle was built to carry a snow plow, do not add one to the vehicle. If the vehicle has RPO VYU, then the payload the vehicle can carry will be reduced when a snow plow is installed. The vehicle can be damaged if either the front or rear axle ratings or the Gross Vehicle Weight Rating (GVWR) are exceeded.

The plow the vehicle can carry depends on many things, such as:

- The options the vehicle came with, and the weight of those options.
- The weight and number of passengers to be carried.
- The weight of items added to the vehicle, like a tool box or truck cap.
- The total weight of any additional cargo to be carried.

To safely carry a snow plow on the vehicle:

- With a snow plow attached, the engine coolant temperature gauge may show a higher temperature than while driving without one. The snow plow could block the airflow to the radiator. This could be more noticeable as vehicle speed increases. At speeds above 72 km/h (45 mph), this may cause the engine coolant to overheat. Move or angle the snow plow blade to allow increased airflow to the radiator.
- To increase the airflow, move the snow plow blade position.
- If driving more than 24 km/h (15 mph), angle the plow blade position.
- Make sure the weight on the front and rear axles does not exceed the axle rating for each.
- Follow the snowplow manufacturer's recommendations for any rear ballast that may be required. Rear ballast may be required to ensure a proper front and rear weight distribution ratio even though the actual weight at the front axle may be less than the front axle rating.
- The snowplow manufacturer or installer can assist in determining the amount of rear ballast required to ensure that the vehicle with the attached snowplow does not exceed the GVW rating, the front and rear axle ratings, or the front and rear weight distribution ratio (refer to the GM Upfitter Manual).

Front axle reserve capacity is the difference between the Front Gross Axle Weight Rating (GAWR) and the front axle weight of the vehicle with full fuel, passengers, and any other cargo. This is the amount of weight that can be added to the front axle before reaching the Front GAWR.

To calculate the amount of weight any front accessory, such as a snow plow, is adding to the front axle, use this formula:

NOT FOR RESALE

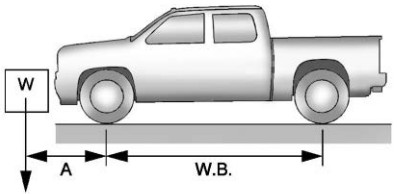

(W x (A + W.B.)) /W.B.= Weight the accessory is adding to the front axle.

Where:

W = Weight of added accessory

A = Distance that the accessory is in front of the front axle

W.B. = Vehicle Wheelbase

For example, adding a 318 kg (700 lb) snow plow actually adds more than 318 kg (700 lb) to the front axle. Using the formula, if the snow plow is 122 cm (4 ft) in front of the front axle and the wheelbase is 305 cm (10 ft), then:

W = 318 kg (700 lb)

A = 122 cm (4 ft)

W.B. = 305 cm (10 ft)

(W x (A + W.B.)/W.B. = (318 x (122 + 305))/305 = 445 kg (980 lb)

This means if the front axle reserve capacity is more than 445 kg (980 lb), the snow plow could be added without exceeding the front GAWR.

Heavier equipment can be added on the front of the vehicle if less cargo or fewer passengers are carried, or by positioning cargo toward the rear. This reduces the load on the front. However, the front GAWR, rear GAWR, and Gross Vehicle Weight Rating (GVWR) must never be exceeded.

⚠ Warning

On some vehicles that have certain front mounted equipment, such as a snow plow, it may be possible to load the front axle to the front Gross Axle Weight Rating (GAWR) but not have enough weight on the rear axle to have proper braking performance. If the brakes cannot work properly, the vehicle could crash. Always follow the snow plow manufacturer or installer's recommendation for rear ballast to ensure

(Continued)

Warning (Continued)

a proper front and rear weight distribution ratio. Maintaining a proper front and rear weight distribution ratio is necessary to provide proper braking performance.

See your dealer for additional advice and information about using a snow plow on the vehicle. Also, see *Vehicle Load Limits* ⇨ *201*.

Pickup Conversion to Chassis Cab

We are aware that some vehicle owners might consider having the pickup box removed and a commercial or recreational body installed. Owners should be aware that, as manufactured, there are differences between a chassis cab and a pickup with the box removed which could affect vehicle safety. The components necessary to adapt a pickup to permit its safe use with a specialized body should be installed by the body builder.

NOT FOR RESALE

Vehicle Care

General Information
- General Information 321
- California Perchlorate Materials Requirements 321
- Accessories and Modifications 321

Vehicle Checks
- Doing Your Own Service Work 321
- Hood 322
- Engine Compartment Overview 324
- Engine Oil (Gasoline) 329
- Engine Oil (Diesel) 331
- Engine Oil Life System 333
- Automatic Transmission Fluid 333
- Engine Air Filter Life System 334
- Engine Air Cleaner/Filter (Diesel) 334
- Engine Air Cleaner/Filter (Gasoline) 335
- Cooling System (Gasoline) 337
- Cooling System (Diesel) 340
- Engine Overheating (Gasoline) 344
- Engine Overheating (Diesel) 345
- Overheated Engine Protection Operating Mode 346
- Engine Fan 346
- Washer Fluid 347
- Brakes 347
- Brake Pad Life System 348
- Brake Fluid 349
- Battery - North America 350
- Four-Wheel Drive 352
- Front Axle 353
- Rear Axle 353
- Park Brake and P (Park) Mechanism Check 353
- Wiper Blade Replacement 353
- Glass Replacement 354
- Windshield Replacement 354
- Gas Strut(s) 354

Headlight Aiming
- Front Headlight Aiming 355

Bulb Replacement
- LED Lighting 355

Electrical System
- Electrical System Overload 355
- Fuses and Circuit Breakers 357
- Engine Compartment Fuse Block 357
- Instrument Panel Fuse Block 362

Wheels and Tires
- Tires 364
- All-Season Tires 365
- Winter Tires 365
- All-Terrain Tires 365
- Tire Sidewall Labeling 365
- Tire Designations 367
- Tire Terminology and Definitions 369
- Tire Pressure 370
- Tire Pressure for High-Speed Operation 371
- Tire Pressure Monitor System 372
- Tire Pressure Monitor Operation 372
- Tire Inspection 376
- Tire Rotation 376
- When It Is Time for New Tires 377
- Buying New Tires 378
- Different Size Tires and Wheels 379
- Uniform Tire Quality Grading 380
- Wheel Alignment and Tire Balance 381
- Wheel Replacement 381
- Tire Chains and Other Traction Devices 382
- If a Tire Goes Flat 382
- Tire Changing 383
- Full-Size Spare Tire 392

Jump Starting
- Jump Starting - North America 393

Towing the Vehicle
- Transporting a Disabled Vehicle 396
- Recreational Vehicle Towing 397

Appearance Care
- Exterior Care 400
- Interior Care 405
- Floor Mats 408

NOT FOR RESALE

General Information

For service and parts needs, visit your dealer. You will receive genuine GM parts and GM-trained and supported service people.

Genuine GM parts have one of these marks:





California Perchlorate Materials Requirements

Certain types of automotive applications, such as airbag initiators, seat belt pretensioners, and lithium batteries contained in electronic keys, may contain perchlorate materials. Perchlorate Material – special handling may apply. See www.dtsc.ca.gov/hazardouswaste/perchlorate.

Accessories and Modifications

Caution

When adding accessories or other equipment after the purchase of your vehicle, ensure you are not exceeding the vehicle axle weight ratings or overall weight ratings. Overloading the vehicle may cause damage. Repairs would not be covered by the vehicle warranty. Do not overload the vehicle. See *Vehicle Load Limits* ⇨ *201* and *General Towing Information* ⇨ *316* for those specific weight ratings.

Adding non-GM approved accessories or making modifications to the vehicle can affect vehicle performance and safety, including airbags, braking, stability, ride and handling, emissions systems, aerodynamics, durability, Advanced Driver Assistance Systems, and electronic systems like antilock brakes, traction control, and stability control. These accessories or modifications could cause malfunction or damage not covered by the vehicle warranty.

Damage to suspension components caused by modifying vehicle height outside of factory settings will not be covered by the vehicle warranty.

Damage to vehicle components resulting from modifications or the installation or use of non-GM certified parts, including control module or software modifications, is not covered under the terms of the vehicle warranty and may affect remaining warranty coverage for affected parts.

Also, see *Adding Equipment to the Airbag-Equipped Vehicle* ⇨ *73*.

Vehicle Checks

Doing Your Own Service Work

⚠ Warning

It can be dangerous to work on your vehicle if you do not have the proper knowledge, service manual, tools, or parts. Always

(Continued)

NOT FOR RESALE

Warning (Continued)

follow owner's manual procedures and consult the service manual for your vehicle before doing any service work.

Caution

Even small amounts of contamination can cause damage to vehicle systems. Do not allow contaminants to contact the fluids, reservoir caps, or dipsticks.

The proper service manual provides more detail on vehicle service than this manual. To order the proper service manual, see *Publication Ordering Information* ⇨ *433*.

This vehicle has an airbag system. Before attempting to do your own service work, see *Servicing the Airbag-Equipped Vehicle* ⇨ *72*.

If equipped with remote start, open the hatch/trunk before performing any service work to prevent remote starting the vehicle accidentally. See *Remote Start* ⇨ *19*.

Keep a record with all parts receipts and list the mileage and the date of any service work performed. See *Maintenance Records* ⇨ *418*.

Hood

⚠ Warning

For vehicles with auto engine stop/start, turn the vehicle off before opening the hood. If the vehicle is on, the engine will start when the hood is opened. You or others could be injured.

⚠ Warning

Components under the hood can get hot from running the engine. To help avoid the risk of burning unprotected skin, never touch these components until they have cooled, and always use a glove or towel to avoid direct skin contact.

Clear any snow from the hood before opening.

To open the hood:

1. Pull the hood release lever with the symbol. It is on the lower left side of the instrument panel.

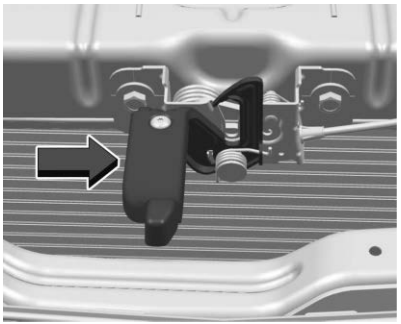

2. Go to the front of the vehicle and locate the secondary release lever under the front center of the hood. Push the secondary hood release lever to the right to release.
3. After you have partially lifted the hood, the gas strut system will automatically lift the hood and hold it in the fully open position.

NOT FOR RESALE

To close the hood:

⚠ Warning

Do not drive the vehicle if the hood is not latched completely. The hood could open fully, block your vision, and cause a crash. You or others could be injured. Always close the hood completely before driving.

1. Before closing the hood, be sure all filler caps are on properly, and all tools are removed.
2. Pull the hood down until the strut system is no longer holding up the hood.
3. Allow the hood to fall. Check to make sure the hood is latched completely. Repeat this process with additional force if necessary.

The Driver Information Center will display a message if the hood is not fully closed, and the vehicle is moving. Stop and turn off the vehicle, check the hood for obstructions, and close the hood again. Check to see if the message still appears on the Driver Information Center.

NOT FOR RESALE

Engine Compartment Overview

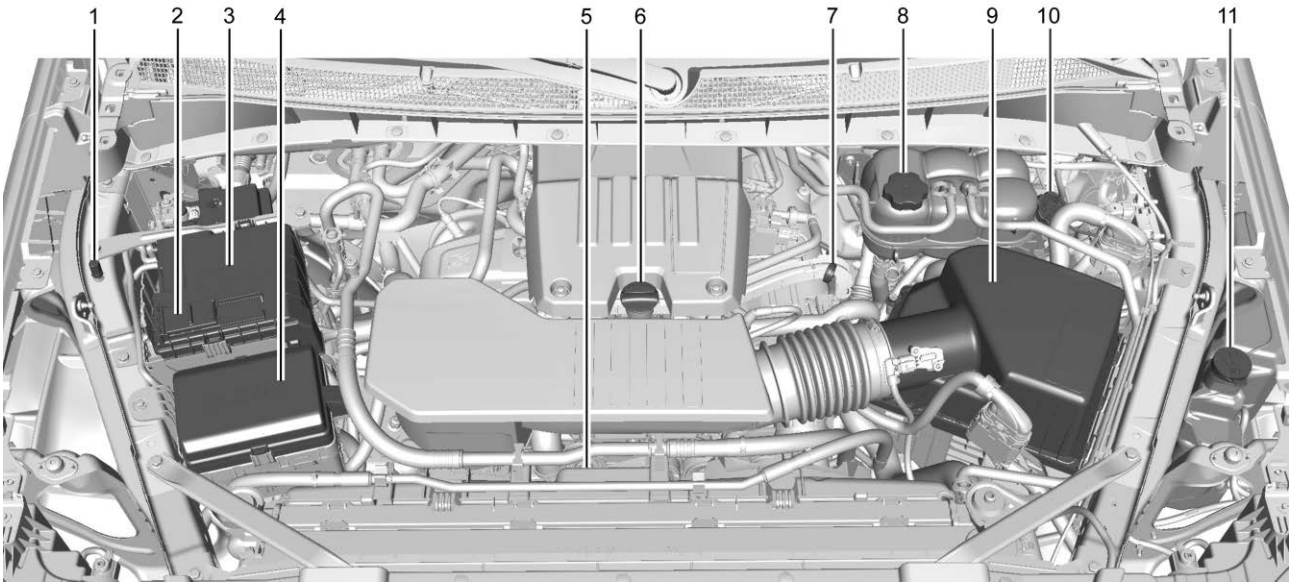

2.7L L4 Engine (L4B)

NOT FOR RESALE

1. Remote Negative (–) Location. See *Jump Starting - North America* ⇨ *393*.
2. Positive (+) Terminal (Under Cover). See *Jump Starting - North America* ⇨ *393*.
3. Battery. See *Battery - North America* ⇨ *350*.
4. Engine Compartment Fuse Black. See *Engine Compartment Fuse Block* ⇨ *357*.
5. Engine Cooling Fans (Out of View). See *Cooling System (Gasoline)* ⇨ *337 Cooling System (Diesel)* ⇨ *340*.
6. Engine Oil Fill Cap. See "When to Add Engine Oil" under *Engine Oil (Gasoline)* ⇨ *329 Engine Oil (Diesel)* ⇨ *331*.
7. Engine Oil Dipstick. See "Checking Engine Oil" under *Engine Oil (Gasoline)* ⇨ *329 Engine Oil (Diesel)* ⇨ *331*.
8. Coolant Surge Tank and Pressure Cap. See *Cooling System (Gasoline)* ⇨ *337 Cooling System (Diesel)* ⇨ *340*.
9. Engine Air Cleaner/Filter. See *Engine Air Cleaner/Filter (Diesel)* ⇨ *334 Engine Air Cleaner/Filter (Gasoline)* ⇨ *335*.
10. Brake Fluid Reservoir. See *Brake Fluid* ⇨ *349*.
11. Windshield Washer Fluid Reservoir. See "Adding Washer Fluid" under *Washer Fluid* ⇨ *347*.

NOT FOR RESALE

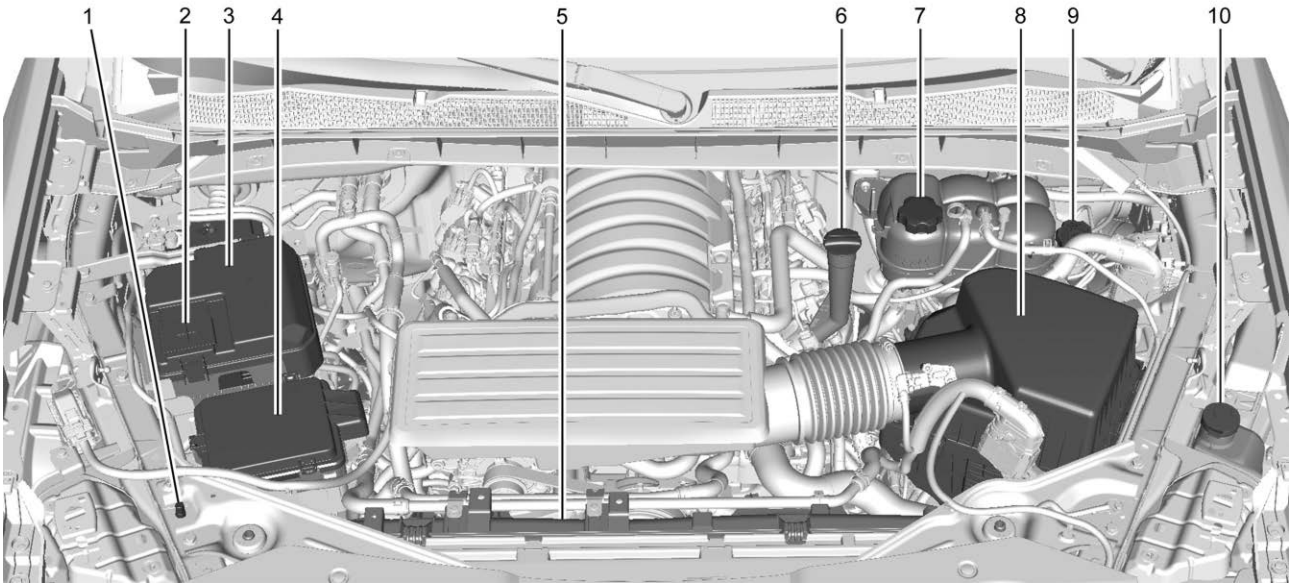

5.7L V8 Engine (L76) Shown, 6.6L V8 Engine (L78) Similar

NOT FOR RESALE

1. Remote Negative (–) Location. See *Jump Starting - North America* ⇨ *393*.
2. Positive (+) Terminal (Under Cover). See *Jump Starting - North America* ⇨ *393*.
3. Battery. See *Battery - North America* ⇨ *350*.
4. Engine Compartment Fuse Block. See *Engine Compartment Fuse Block* ⇨ *357*.
5. Engine Cooling Fans (Out of View). See *Cooling System (Gasoline)* ⇨ *337 Cooling System (Diesel)* ⇨ *340*.
6. Engine Oil Fill Cap. See "When to Add Engine Oil" under *Engine Oil (Gasoline)* ⇨ *329 Engine Oil (Diesel)* ⇨ *331*.
7. Coolant Surge Tank and Pressure Cap. See *Cooling System (Gasoline)* ⇨ *337 Cooling System (Diesel)* ⇨ *340*.
8. Engine Air Cleaner/Filter. See *Engine Air Cleaner/Filter (Diesel)* ⇨ *334 Engine Air Cleaner/Filter (Gasoline)* ⇨ *335*.
9. Brake Fluid Reservoir. See *Brake Fluid* ⇨ *349*.
10. Windshield Washer Fluid Reservoir. See "Adding Washer Fluid" under *Washer Fluid* ⇨ *347*.

NOT FOR RESALE

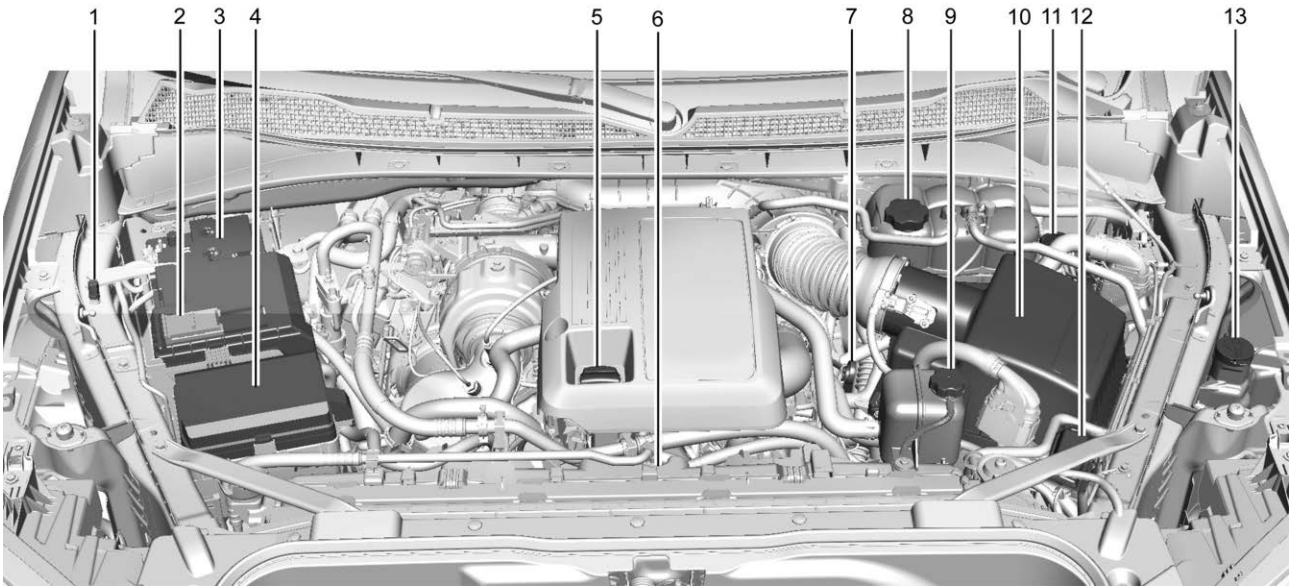

3.0L Duramax Engine (LZ0)

NOT FOR RESALE

1. Remote Negative (-) Ground Terminal. See *Jump Starting - North America* ⇨ *393*.
2. Positive (+) Terminal. See *Jump Starting - North America* ⇨ *393*.
3. Battery. See *Battery - North America* ⇨ *350*.
4. Engine Compartment Fuse Block. See *Engine Compartment Fuse Block* ⇨ *357*.
5. Engine Oil Fill Cap. See "When to Add Engine Oil" under *Engine Oil (Gasoline)* ⇨ *329 Engine Oil (Diesel)* ⇨ *331*.
6. Engine Fan (Out of View). See *Cooling System (Gasoline)* ⇨ *337 Cooling System (Diesel)* ⇨ *340*.
7. Engine Oil Dipstick. See "Checking Engine Oil" under *Engine Oil (Gasoline)* ⇨ *329 Engine Oil (Diesel)* ⇨ *331*.
8. Engine Coolant Surge Tank and Pressure Cap. See *Cooling System (Gasoline)* ⇨ *337 Cooling System (Diesel)* ⇨ *340*.
9. Charge Air Coolant Surge Tank and Pressure Cap. See *Cooling System (Gasoline)* ⇨ *337 Cooling System (Diesel)* ⇨ *340*.
10. Engine Air Cleaner/Filter. See *Engine Air Cleaner/Filter (Diesel)* ⇨ *334 Engine Air Cleaner/Filter (Gasoline)* ⇨ *335*.
11. Brake Fluid Reservoir. See *Brake Fluid* ⇨ *349*.
12. Auxiliary Fuse Block.
13. Windshield Washer Fluid Reservoir. See "Adding Washer Fluid" under *Washer Fluid* ⇨ *347*.

Engine Oil (Gasoline)

To ensure proper engine performance and long life, careful attention must be paid to engine oil. Following these simple, but important steps will help protect your investment:

- Use engine oil approved to the proper specification and of the proper viscosity grade. See "Selecting the Right Engine Oil" in this section.
- Check the engine oil level regularly and maintain the proper oil level. See "Checking Engine Oil" in this section.
- Change the engine oil at the appropriate time. See *Engine Oil Life System* ⇨ *333*.
- Always dispose of engine oil properly. See "What to Do with Used Oil" in this section.

Checking Engine Oil – 2.7L L4 Engine

Caution
Do not add too much oil. Oil levels above or below the acceptable operating range are harmful to the engine. If you find that you have an oil level above the operating range, the engine could be damaged. You should drain out the excess oil or limit driving of the vehicle and seek a service professional to remove the excess amount of oil.

Check the engine oil level regularly, every 650 km (400 mi), especially prior to a long trip. For engine oil crankcase capacity, see *Capacities and Specifications* ⇨ *420*.

If a low oil Driver Information Center message displays, check the oil level.

- To get an accurate reading, park the vehicle on level ground. Check the engine oil level after the engine has been off for at least two hours. Checking the engine oil level on steep grades or too soon after engine shutoff can result in incorrect readings. Accuracy improves when checking a cold engine prior to starting.

NOT FOR RESALE

- If unable to wait two hours, the engine must be off for at least 15 minutes if the engine is warm, or at least 30 minutes if the engine is not warm.

⚠ Warning

The engine oil dipstick handle may be hot; it could burn you. Use a towel or glove to touch the dipstick handle.

The engine oil dipstick handle is a loop. See *Engine Compartment Overview* ⇨ *324* for the location.

Pull out the dipstick, wipe it with a clean paper towel or cloth, then push it back in all the way. Remove it again, keeping the tip down, and check the level.



If the oil is below the cross-hatched area at the tip of the dipstick and the engine has been off for at least 15 minutes, add 1 L (1 qt) of the recommended oil and then recheck the level. See "Selecting the Right Engine Oil" later in this section for an explanation of what kind of oil to use.

See *Engine Compartment Overview* ⇨ *324* for the location of the engine oil fill cap.

Add enough oil to put the level somewhere in the acceptable operating range. Push the dipstick all the way back in when through.

Checking Engine Oil – 5.7L and 6.6L V8 Engines

Caution

Do not add too much oil. Oil levels above or below the acceptable operating range are harmful to the engine. If you find that you have an oil level above the operating range, the engine could be damaged. You should drain out the excess oil or limit driving of the vehicle and seek a service professional to remove the excess amount of oil.

Check the engine oil level regularly, every 650 km (400 mi), especially prior to a long trip. For engine oil crankcase capacity, see *Capacities and Specifications* ⇨ *420*.

Your vehicle is not equipped with an engine oil dipstick. To check the engine oil level, see *Vehicle Status* ⇨ *131*.

To ensure an accurate reading, park the vehicle on level ground with the engine at idle speed and normal operating temperature.

If the engine oil level is below or above the MIN/MAX range, the indicator will illuminate red. For low oil levels, the required amount of oil to add will be displayed below the indicator. Add the recommended amount and then recheck the level. See *Engine Compartment Overview* ⇨ *324* for the location of the engine oil fill cap. See "Selecting the Right Engine Oil" later in this section for an explanation of what kind of oil to use.

Selecting the Right Engine Oil

Selecting the right engine oil depends on both the proper oil specification and viscosity grade.

Specification

Use full synthetic engine oils that meet the dexos1 specification. Engine oils that have been approved by GM as meeting the dexos1 specification are marked with the dexos1 approved logo.

NOT FOR RESALE



Caution

Failure to use the recommended engine oil or equivalent can result in engine damage not covered by the vehicle warranty.

Viscosity Grade

Use SAE 0W-30 viscosity grade engine oil.

Engine Oil Additives/Engine Oil Flushes

Do not add anything to the oil. The recommended oils meeting the dexos1 specification are all that is needed for good performance and engine protection.

Engine oil system flushes are not recommended and could cause engine damage not covered by the vehicle warranty.

What to Do with Used Oil

Used engine oil contains certain elements that can be unhealthy for your skin and could even cause cancer. Do not let used oil stay on your skin for very long. Clean your skin and nails with soap and water, or a good hand cleaner. Wash or properly dispose of clothing or rags containing used engine oil. See the manufacturer's warnings about the use and disposal of oil products.

Used oil can be a threat to the environment. If you change your own oil, be sure to drain all the oil from the filter before disposal. Never dispose of oil by putting it in the trash or pouring it on the ground, into sewers, or into streams or bodies of water. Recycle it by taking it to a place that collects used oil.

Engine Oil (Diesel)

To ensure proper engine performance and long life, careful attention must be paid to engine oil. Following these simple, but important steps will help protect your investment:

- Use engine oil approved to the proper specification and of the proper viscosity grade. See "Selecting the Right Engine Oil" in this section.
- Check the engine oil level regularly and maintain the proper oil level. See "Checking Engine Oil" and "When to Add Engine Oil" in this section.
- Change the engine oil at the appropriate time. See *Engine Oil Life System* ⇨ *333*.
- Always dispose of engine oil properly. See "What to Do with Used Oil" in this section.

Checking Engine Oil

Check the engine oil level regularly, every 650 km (400 mi), especially prior to a long trip. The engine oil dipstick handle is a loop. See *Engine Compartment Overview* ⇨ *324* for the location.

⚠ Warning

The engine oil dipstick handle may be hot; it could burn you. Use a towel or glove to touch the dipstick handle.

If a low oil Driver Information Center (DIC) message displays, check the oil level.

NOT FOR RESALE

Follow these guidelines:

- To get an accurate reading, park the vehicle on level ground. Check the engine oil level after the engine has been off for at least two hours. Checking the engine oil level on steep grades or too soon after engine shutoff can result in incorrect readings. Accuracy improves when checking a cold engine prior to starting. Remove the dipstick and check the level.
- If unable to wait two hours, the engine must be off for at least 15 minutes if the engine is warm, or at least 30 minutes if the engine is not warm. Pull out the dipstick, wipe it with a clean paper towel or cloth, then push it back in all the way. Remove it again, keeping the tip down, and check the level.

When to Add Engine Oil



If the oil is below the cross-hatched area at the tip of the dipstick and the engine has been off for at least 15 minutes, add 1 L (1 qt) of the recommended oil and then recheck the level. See "Selecting the Right Engine Oil" later in this section for an explanation of what kind of oil to use. For engine oil crankcase capacity, see *Capacities and Specifications* ⇨ *420*.

Caution

Do not add too much oil. Oil levels above or below the acceptable operating range shown on the dipstick are harmful to the engine. If the oil level is above the operating range (i.e., the engine has so much oil that the oil level gets above the cross-hatched area that shows the proper operating range), the engine could be damaged. Drain the excess oil or limit driving of the vehicle, and seek a service professional to remove the excess oil.

See *Engine Compartment Overview* ⇨ *324* for the location of the engine oil fill cap.

Be sure to add enough oil to put the level somewhere in the proper operating range. Push the dipstick all the way back in when through.

Selecting the Right Engine Oil

Selecting the right engine oil depends on both the proper oil specification and viscosity grade. See *Recommended Fluids and Lubricants* ⇨ *416*.

Specification

Use engine oils that meet the dexosD specification. Engine oils that have been approved by GM as meeting the dexosD specification are marked with the dexosD approved logo. See www.gmdexos.com.

dexos D DIESEL

NOT FOR RESALE

Caution
Failure to use the recommended engine oil or equivalent can result in engine damage not covered by the vehicle warranty.

Viscosity Grade

Use SAE 0W-20 viscosity grade engine oil.

When selecting an oil of the appropriate viscosity grade, it is recommended to select an oil of the correct specification. See "Specification" earlier in this section.

Engine Oil Additives/Engine Oil Flushes

Do not add anything to the oil. The recommended oils meeting the dexos specification are all that is needed for good performance and engine protection.

Engine oil system flushes are not recommended and could cause engine damage not covered by the vehicle warranty.

What to Do with Used Oil

Used engine oil contains certain elements that can be unhealthy for your skin and could even cause cancer. Do not let used oil stay on your skin for very long. Clean your skin and nails with soap and water, or a good hand cleaner. Wash or properly dispose of clothing or rags containing used engine oil. See the manufacturer's warnings about the use and disposal of oil products.

Used oil can be a threat to the environment. If you change your own oil, be sure to drain all the oil from the filter before disposal. Never dispose of oil by putting it in the trash or pouring it on the ground, into sewers, or into streams or bodies of water. Recycle it by taking it to a place that collects used oil.

Engine Oil Life System

When to Change Engine Oil

The engine oil and filter must be changed, and the system must be reset at least once a year.

CHANGE ENGINE OIL SOON displays when the engine oil and filter needs service. Factors including run time, engine temperature, and distance driven affect how soon this light appears. Therefore, the time and distance in between oil change services may vary.

Once the CHANGE ENGINE OIL SOON light displays, change your oil as soon as possible within the next 1 000 km (600 mi). Check the oil regularly between services and keep it at the proper level. Your dealer has trained service technicians who can perform this work.

Resetting the Engine Oil Life System

You must reset the engine oil life system to 100% after every oil change. See *Vehicle Status* ⇨ *131*.

If CHANGE ENGINE OIL SOON displays when the vehicle is started and/or the OIL LIFE REMAINING is near 0%, the engine oil life system was not properly reset. Repeat the procedure.

If the system is reset accidentally, the oil must be changed at 5 000 km (3,000 mi) since the last oil change.

Automatic Transmission Fluid

When to Check and Change Automatic Transmission Fluid

It is usually not necessary to check the transmission fluid level. The only reason for fluid loss is a transmission leak or overheated transmission. This vehicle is not equipped with a transmission fluid level dipstick. There is a special procedure for checking and changing the transmission fluid in these vehicles.

NOT FOR RESALE

Because this procedure is difficult, this should be done at the dealer. Contact the dealer for additional information or the procedure can be found in the service manual. See *Publication Ordering Information* ⇨ *433*.

Caution
Use of the incorrect automatic transmission fluid may damage the vehicle, and the damage may not be covered by the vehicle warranty. Always use the correct automatic transmission fluid. See *Recommended Fluids and Lubricants* ⇨ *416*.

Change the fluid and filter at the scheduled maintenance intervals listed in *Maintenance Schedule* ⇨ *412*. Be sure to use the transmission fluid listed in *Recommended Fluids and Lubricants* ⇨ *416*.

Engine Air Filter Life System

If equipped, this feature provides the engine air filter's remaining life and best timing for a change. The timing to change an engine air filter depends on driving and environmental conditions. See *Vehicle Status* ⇨ *131*.

When to Change the Engine Air Filter

Check or replace the engine air filter if vehicle messages indicate inspection or replacement is needed. To check or replace the engine air filter, see "How to Inspect/Replace the Engine Air Cleaner/Filter" under *Engine Air Cleaner/Filter (Diesel)* ⇨ *334 Engine Air Cleaner/Filter (Gasoline)* ⇨ *335*. See your dealer for assistance.

If the Driver Information Center displays a message to check the engine air filter system, see your dealer.

How to Reset the Engine Air Filter Life System

The system must be reset after the engine air filter is changed. To reset:

1. Place the vehicle in P (Park).
2. From the infotainment home screen, select Vehicle Status > Maintenance > Engine Air Filter.
3. Follow the screen prompts and touch RESET on the display screen. Then touch RESET again to confirm. The percentage of filter life remaining will change to 100%.

Engine Air Cleaner/Filter (Diesel)

The engine air cleaner/filter is located in the engine compartment on the driver side of the vehicle. See *Engine Compartment Overview* ⇨ *324* for more information on location.

When to Inspect the Engine Air Cleaner/Filter

If the vehicle is not equipped with the engine air filter life system, see *Maintenance Schedule* ⇨ *412* for intervals on inspecting and replacing the engine air cleaner/filter.

How to Inspect/Replace the Engine Air Cleaner/Filter

⚠ Warning
Operating the engine with the air cleaner/filter off can cause you or others to be burned. Use caution when working on the engine. Do not start the engine or drive the vehicle with the air cleaner/filter off, as flames may be present if the engine backfires.

NOT FOR RESALE

Caution

If the air cleaner/filter is off, dirt can easily get into the engine, which could damage it. Always have the air cleaner/filter in place when driving.

Do not start the engine or have the engine running with the engine air cleaner/filter housing open. Before removing the engine air cleaner/filter, make sure that the engine air cleaner/filter housing and nearby components are free of dirt and debris. Remove the engine air cleaner/filter. Lightly tap and shake the engine air cleaner/filter (away from the vehicle), to release loose dust and dirt. Inspect the engine air cleaner/filter for damage, and replace if damaged. Do not clean the engine air cleaner/filter or components with water or compressed air.

To inspect or replace the air cleaner/filter:

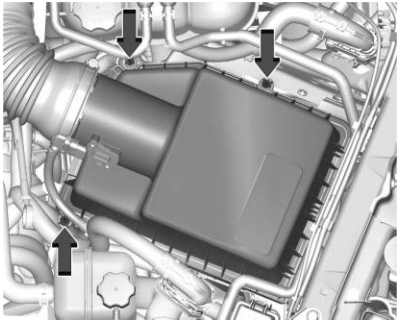

1. Remove the three screws, tilt the cover, and slide it out of the assembly.

⚠ Warning

If part replacement is necessary, the part must be replaced with one of the same part number or with an equivalent part. Use of a replacement part without the same fit, form, and function may result in personal injury or damage to the vehicle.

2. Inspect or replace the engine air cleaner/filter.
3. Lower the cover, slide it into the assembly, then secure with the three screws.
4. If equipped, reset the engine air filter life system after replacing the engine air filter. See *Engine Air Filter Life System* ⇨ *334*.

Engine Air Cleaner/Filter (Gasoline)

The engine air cleaner/filter is on the driver side of the engine compartment. See *Engine Compartment Overview* ⇨ *324*.

When to Inspect the Engine Air Cleaner/Filter

If the vehicle is not equipped with the engine air filter life system see *Maintenance Schedule* ⇨ *412* for intervals on inspecting and replacing the engine air cleaner filter.

How to Inspect/Replace the Engine Air Cleaner/Filter

⚠ Warning

Operating the engine with the air cleaner/filter off can cause you or others to be burned. Use caution when working on

(Continued)

NOT FOR RESALE

Warning (Continued)

the engine. Do not start the engine or drive the vehicle with the air cleaner/filter off, as flames may be present if the engine backfires.

Caution

If the air cleaner/filter is off, dirt can easily get into the engine, which could damage it. Always have the air cleaner/filter in place when driving.

Do not start or run the engine with the engine air cleaner/filter housing open. Before removing the engine air cleaner/filter, clear any dirt and debris away from the engine air cleaner/filter housing and nearby components. Remove the engine air cleaner/filter. Lightly tap and shake the engine air cleaner/filter (away from the vehicle), to release loose dust and dirt. Inspect the engine air cleaner/filter for damage; replace if damaged. Do not clean the engine air cleaner/filter or components with water or compressed air.

To inspect or replace the engine air cleaner/filter:

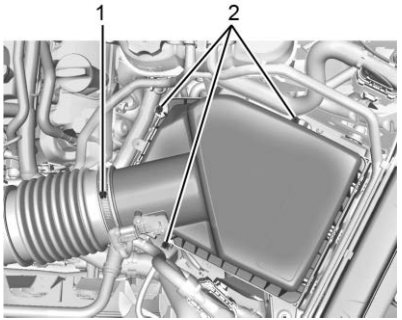

5.7L V8 Engine (L76) Shown, 2.7L L4 Engine (L4B), and 6.6L V8 Engine (L78) Similar.

1. Air Duct Clamp
2. Screws

1. Locate the air cleaner/filter assembly. See *Engine Compartment Overview* ⇨ *324*.
2. Disconnect the outlet duct by loosening the air duct clamp (1).
3. Remove the three screws on top of the cover of the housing, then slide and lift the cover.
4. Lift and remove the engine air cleaner/filter.

⚠ Warning

If part replacement is necessary, the part must be replaced with one of the same part number or with an equivalent part. Use of a replacement part without the same fit, form, and function may result in personal injury or damage to the vehicle.

5. Lightly tap and shake the engine air cleaner/filter, away from the vehicle, to release loose dust and dirt. Replace the engine air filter if damaged.
6. Reverse Steps 2–5 to reinstall the engine air cleaner/filter cover housing.
7. If equipped, reset the engine air filter life system after replacing the engine air filter. See *Engine Air Filter Life System* ⇨ *334*.

NOT FOR RESALE

Cooling System (Gasoline)

Warning

An underhood electric fan can start up even when the engine is not running and can cause injury. Keep hands, clothing, and tools away from any underhood electric fan.

Warning

Do not touch heater, radiator, a/c pipes or hoses, or other engine parts. They can be very hot and can burn you. Do not run the engine if there is a leak; all coolant could leak out. That could cause an engine fire and can burn you. Fix any leak before driving the vehicle.

The cooling system allows the engine to maintain the correct working temperature.

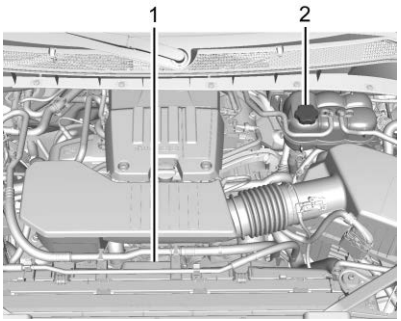

2.7L L4 Engine (L4B)

1. Engine Electric Cooling Fans (Out of View)
2. Coolant Surge Tank and Pressure Cap

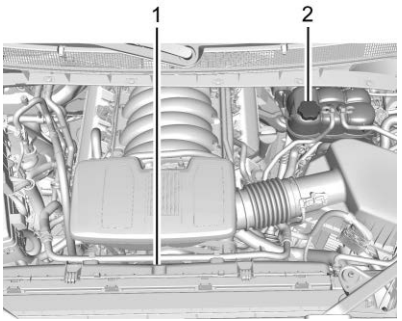

5.3L V8 Engine (L76) Shown, 6.2L V8 Engine (L78) Similar

1. Engine Electric Cooling Fans (Out of View)
2. Coolant Surge Tank and Pressure Cap

Engine Coolant

The engine cooling system is filled with dexcool engine coolant. Check and replace the coolant at the recommended intervals. See *Maintenance Schedule* ⇨ *412*.

If you see signs of a cooling system leak, see your dealer for service.

NOT FOR RESALE

The following explains the cooling system and how to check and add coolant when it is low. If there is a problem with engine overheating, see *Engine Overheating (Gasoline)* ⇨ *344 Engine Overheating (Diesel)* ⇨ *345*.

What to Use

⚠ Warning

Plain water, or other liquids such as alcohol, can boil before the proper coolant mixture will. With plain water or the wrong mixture, the engine could get too hot but there would not be an overheat warning. The engine could catch fire and you or others could be burned.

Caution

Do not use anything other than a mix of dexcool coolant that meets GM Standard GMW3420 and clean, drinkable water. Anything else can cause damage to the engine cooling system and the vehicle, which would not be covered by the vehicle warranty.

Use a 50/50 mixture of clean, drinkable water and dexcool coolant. This mixture:

- Gives freezing protection down to −37 °C (−34 °F), outside temperature.
- Gives boiling protection up to 129 °C (265 °F), engine temperature.
- Protects against rust and corrosion.
- Will not damage aluminum parts.
- Helps keep the proper engine temperature.

Never dispose of engine coolant by putting it in the trash, or by pouring it on the ground, or into sewers, streams, or bodies of water. Have the coolant changed by an authorized service center, familiar with legal requirements regarding used coolant disposal. This will help protect the environment and your health.

Checking Coolant

The coolant should be checked when the engine is cold. Park the vehicle on a level surface. Turn off the engine and allow the cooling system to completely cool before proceeding.

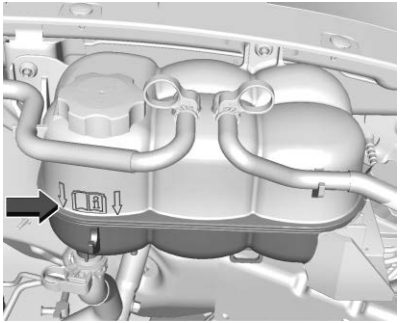

Check to see if coolant is visible in the coolant surge tank. If coolant is visible but below the fill level mark on the surge tank, or if no coolant is visible in the surge tank, continue below, or see your dealer for service.

If there is no fill level mark on the surge tank, or it is obstructed from view, use the middle of the surge tank or the rib separating the top and bottom halves of the tank as your fill level reference point.

NOT FOR RESALE

How to Add Coolant to the Coolant Surge Tank

⚠ Warning

Spilling coolant on hot engine parts can burn you. Coolant contains ethylene glycol and it will burn if the engine parts are hot enough.

⚠ Warning

Steam and scalding liquids from a hot cooling system are under pressure. Turning the pressure cap, even a little, can cause them to come out at high speed and you could be burned. Never turn the cap when the cooling system, including the pressure cap, is hot. Wait for the cooling system and pressure cap to cool.

If no coolant is visible in the surge tank, follow the "Automatic Coolant Service Fill" procedure later in this section.

If coolant is visible in the surge tank but below the fill level mark:

1. Ensure the cooling system is cold.
2. Remove the coolant surge tank pressure cap by turning the cap slowly counterclockwise about one full turn. If a hiss is heard, wait for that to stop. A hiss means there is still some pressure left in the system.
3. Keep turning the pressure cap slowly, and remove it.

Caution

If the pressure cap is not tightly installed, coolant loss and engine damage may occur. Be sure the cap is properly and tightly secured.

4. Fill the surge tank with the proper mixture to the fill level mark. Replace the pressure cap.

   Recheck the coolant level over the next several ignition cycles. Add coolant as required. If the coolant continues to drop below the proper level, there may be a leak in the cooling system. See your dealer for service.

Automatic Coolant Service Fill

Use this feature to automatically remove air during the filling process when no coolant is visible in the surge tank, after service of cooling system components, or when coolant has been removed from the cooling system. Air in the cooling system can interrupt or block the flow of coolant and lead to engine overheating. The system opens and closes coolant valves and adjusts pump speed to move coolant through all parts of the cooling system, pushing trapped air back to the surge tank where it is expelled.

1. Ensure the cooling system is cold.
2. Remove the coolant surge tank pressure cap by turning the cap slowly counterclockwise about one full turn. If a hiss is heard, wait for that to stop. A hiss means there is still some pressure left in the system.
3. Keep turning the pressure cap slowly, and remove it.

Caution

If the pressure cap is not tightly installed, coolant loss and engine damage may occur. Be sure the cap is properly and tightly secured.

NOT FOR RESALE

4. Fill the surge tank with the proper mixture to the fill level mark. Replace the pressure cap.
5. Connect the vehicle to a battery charger.
6. Place the vehicle in service mode. See *Ignition Positions* ⇨ *208*.
7. Turn off the air conditioning.
8. Set the parking brake.

   If your vehicle is equipped with the 5.3L or the 6.2L V8 engine, perform Step 9, then skip to Step 11.

   If your vehicle is equipped with the 2.7L L4 engine, skip Step 9 and proceed to Step 10.
9. While pressing down and holding both brake and accelerator pedals, press the engine stop/start button, and then release. Immediately release both pedals.

   The engine will start with Automatic Coolant Service Fill active. It is normal for engine speed to remain high throughout the procedure.
10. Press down and hold both brake and accelerator pedals for two seconds, and then release.
11. A message will appear in the Driver Information Center stating the Automatic Coolant Service Fill has been activated. The fill and air removal process will run for approximately 15 minutes. During this time, watch the level of the coolant in the surge tank.

    If the surge tank completely empties, turn off the vehicle and allow the Engine Control Module (ECM) to go to sleep, about two minutes, then restart the procedure from Step 1. Otherwise, allow the procedure to run to completion.
12. When the fill and air removal process is complete, a message will appear in the Driver Information Center stating the procedure is complete. Turn the vehicle off.
13. Recheck the coolant level in the surge tank once the cooling system is cold. If the level is below the fill level mark, repeat the procedure.

    In some cases, you may need to run the Automatic Coolant Service Fill procedure several times before the cooling system completely fills and the level remains steady at the fill level mark.

If after several attempts, the coolant continues to drop below the proper level, there may be a leak in the cooling system. See your dealer for service.

Cooling System (Diesel)

⚠ Warning

An underhood electric fan can start up even when the engine is not running and can cause injury. Keep hands, clothing, and tools away from any underhood electric fan.

⚠ Warning

Do not touch heater or radiator hoses, or other engine parts. They can be very hot and can burn you. Do not run the engine if there is a leak; all coolant could leak out. That could cause an engine fire and can burn you. Fix any leak before driving the vehicle.

The vehicle has two separate cooling systems: the engine cooling system, which allows the engine to maintain the correct working temperature, and the charge air cooling

NOT FOR RESALE

system, which cools the compressed air from the turbocharger before it enters the engine intake.

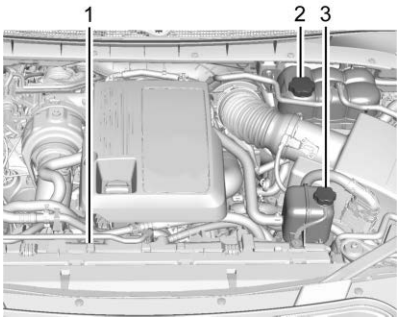

1. Engine Cooling Fan (Out of View)
2. Engine Coolant Surge Tank and Pressure Cap
3. Charge Air Coolant Surge Tank and Pressure Cap

Engine and Charge Air Coolant

The engine and charge air cooling systems are filled with dexcool engine coolant. Check and replace the coolant at the recommended intervals. See *Maintenance Schedule* ⇨ *412*.

If you see signs of a cooling system leak, see your dealer for service.

The following explains the cooling systems and how to check and add coolant when it is low. If there is a problem with engine overheating, see *Engine Overheating (Gasoline)* ⇨ *344 Engine Overheating (Diesel)* ⇨ *345*.

What to Use

⚠ Warning

Plain water, or other liquids such as alcohol, can boil before the proper coolant mixture will. With plain water or the wrong mixture, the engine could get too hot but there would not be an overheat warning. The engine could catch fire and you or others could be burned.

Caution

Do not use anything other than a mix of dexcool coolant that meets GM Standard GMW3420 and clean, drinkable water. Anything else can cause damage to the

(Continued)

Caution (Continued)

engine cooling system and the vehicle, which would not be covered by the vehicle warranty.

Use a 50/50 mixture of clean, drinkable water and dexcool coolant. This mixture:

- Gives freezing protection down to −37 °C (−34 °F).
- Gives boiling protection up to 129 °C (265 °F).
- Protects against rust and corrosion.
- Will not damage aluminum parts.
- Helps keep the proper engine temperature.

Never dispose of engine coolant by putting it in the trash, or by pouring it on the ground, or into sewers, streams, or bodies of water. Have the coolant changed by an authorized service center, familiar with legal requirements regarding used coolant disposal. This will help protect the environment and your health.

NOT FOR RESALE

Checking Coolant

The coolant should be checked when the engine is cold. Park the vehicle on a level surface. Turn off the engine and allow the cooling system to completely cool before proceeding.

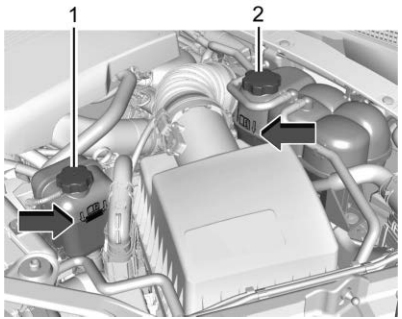

1. Charge Air Coolant Surge Tank and Pressure Cap
2. Engine Coolant Surge Tank and Pressure Cap

Check to see if coolant is visible in the surge tanks. If coolant is visible but below the fill level mark in one or both of the surge tanks, or if no coolant is visible in one or both of the surge tanks, continue below, or see your dealer for service.

If there is no fill level mark on the surge tank, or it is obstructed from view, use the middle of the surge tank or the rib separating the top and bottom halves of the tank as your fill level reference point.

How to Add Coolant to the Coolant Surge Tank

⚠ Warning

Spilling coolant on hot engine parts can burn you. Coolant contains ethylene glycol and it will burn if the engine parts are hot enough.

⚠ Warning

Steam and scalding liquids from a hot cooling system are under pressure. Turning the pressure cap, even a little, can cause them to come out at high speed and you could be burned. Never turn the cap when the cooling system, including the pressure cap, is hot. Wait for the cooling system and pressure cap to cool.

If no coolant is visible in one or both of the surge tanks, follow the "Automatic Coolant Service Fill" procedure later in this section.

If coolant is visible in both surge tanks but below the fill level mark in one or both surge tanks:

1. Ensure the cooling system is cold.
2. Remove the coolant surge tank pressure cap from the surge tank that is low, by turning the cap slowly counterclockwise about one full turn. If a hiss is heard, wait for that to stop. A hiss means there is still some pressure left in the system.
3. Keep turning the pressure cap slowly, and remove it.

Caution

If the pressure cap is not tightly installed, coolant loss and engine damage may occur. Be sure the cap is properly and tightly secured.

4. Fill the surge tank with the proper mixture to the fill level mark. Replace the pressure cap.

NOT FOR RESALE

Recheck the coolant level over the next several ignition cycles. Add coolant as required. If the coolant continues to drop below the proper level, there may be a leak in the cooling system. See your dealer for service.

Automatic Coolant Service Fill

Use this feature to automatically remove air during the filling process when no coolant is visible in one or both of the surge tanks, after service of cooling system components, or when coolant has been removed from the cooling system. Air in the cooling system can interrupt or block the flow of coolant and lead to engine overheating. The system opens and closes coolant valves and adjusts pump speed to move coolant through all parts of the cooling system, pushing trapped air back to the surge tanks where it is expelled.

1. Ensure the cooling system is cold.
2. Remove the coolant surge tank pressure cap from the surge tank that has no visible coolant, by turning the cap slowly counterclockwise about one full turn. If a hiss is heard, wait for that to stop. A hiss means there is still some pressure left in the system.
3. Keep turning the pressure cap slowly, and remove it.

Caution
If the pressure cap is not tightly installed, coolant loss and engine damage may occur. Be sure the cap is properly and tightly secured.

4. Fill the surge tank with the proper mixture to the fill level mark. Replace the pressure cap.
5. Connect the vehicle to a battery charger.
6. Place the vehicle in service mode. See *Ignition Positions* ⇨ *208*.
7. Turn off the air conditioning.
8. Set the parking brake.
9. While pressing down and holding both brake and accelerator pedals, press the engine stop/start button, and then release. Immediately release both pedals.

   The engine will start with Automatic Coolant Service Fill active. It is normal for the engine speed to remain high throughout the procedure.
10. A message will appear in the Driver Information Center stating the Automatic Coolant Service Fill has been activated. The fill and air removal process will run for approximately 15 minutes. During this time, watch the level of the coolant in both the engine and charge air surge tanks.

    If either the engine or charge air surge tank completely empties, turn off the vehicle and allow the Engine Control Module (ECM) to go to sleep, about two minutes, then restart the procedure from Step 1. Otherwise, allow the procedure to run to completion.
11. When the fill and air removal process is complete, a message will appear in the Driver Information Center stating the procedure is complete. Turn the vehicle off.
12. Recheck the coolant level in both surge tanks once the cooling system is cold. If the level is below the fill level mark, repeat the procedure.

    In some cases, you may need to run the Automatic Coolant Service Fill procedure several times before the cooling system completely fills and the level remains steady at the fill level mark.

NOT FOR RESALE

If after several attempts, the coolant continues to drop below the proper level, there may be a leak in the cooling system. See your dealer for service.

Engine Overheating (Gasoline)

Caution

Do not run the engine if there is a leak in the engine cooling system. This can cause a loss of all coolant and can damage the system and vehicle. Have any leaks fixed right away.

The vehicle has several indicators to warn of engine overheating.

There is a coolant temperature gauge in the vehicle's instrument cluster. See *Engine Coolant Temperature Gauge* ⇨ *115*.

In addition, there are ENGINE OVERHEATED STOP ENGINE, ENGINE OVERHEATED IDLE ENGINE, and ENGINE POWER IS REDUCED messages in the Driver Information Center.

If you decide not to lift the hood when this warning appears, get service help right away. See *Roadside Assistance Program* ⇨ *429*.

If you decide to lift the hood, make sure the vehicle is parked on a level surface.

2.7L L4, 5.7L V8, and 6.6L V8 Engines

Check to see if the engine cooling fans are running. If the engine is overheating, the fans should be running. If they are not, do not continue to run the engine and have the vehicle serviced.

If the engine or transmission detects an impending hot fluid condition, then the transmission may force upshifts to limit temperatures. Downshifts may also be prevented in this instance. Normal operation may continue unless the display indicates there is a hot condition and engine should be idled.

If Steam is Coming from the Engine Compartment

⚠ Warning

Steam and scalding liquids from a hot cooling system are under pressure. Turning the pressure cap, even a little, can cause them to come out at high speed and you

(Continued)

Warning (Continued)

could be burned. Never turn the cap when the cooling system, including the pressure cap, is hot. Wait for the cooling system and pressure cap to cool.

If No Steam is Coming from the Engine Compartment

The ENGINE OVERHEATED STOP ENGINE or the ENGINE OVERHEATED IDLE ENGINE message, along with a low coolant condition, can indicate a serious problem.

The 2.7L L4 engine will shut down automatically if the ENGINE OVERHEATED STOP ENGINE message displays.

If there is an engine overheat warning, but there is no sign of steam, the problem may not be too serious. Sometimes the engine can get a little too hot when the vehicle:

- Climbs a long hill on a hot day.
- Stops after high-speed driving.
- Idles for long periods in traffic.
- Tows a trailer.

NOT FOR RESALE

If the ENGINE OVERHEATED STOP ENGINE or the ENGINE OVERHEATED IDLE ENGINE message appears with no sign of steam, try this for a minute or so:

1. Turn the air conditioning off.
2. Turn the heater on to the highest temperature and to the highest fan speed. Open the windows as necessary.
3. When it is safe to do so, pull off the road, shift to P (Park) or N (Neutral) and let the engine idle.

If the temperature overheat gauge is no longer in the overheat zone or an overheat warning no longer displays, the vehicle can be driven. Continue to drive the vehicle slowly for about 10 minutes. Keep a safe vehicle distance from the vehicle in front. If the warning does not come back on, continue to drive normally and have the cooling system checked for proper fill and function.

If the warning continues, pull over, stop, and shift to P (Park) right away.

If there is still no sign of steam and the vehicle is equipped with an engine driven cooling fan, push down the accelerator until the engine speed is about twice as fast as normal idle speed for at least five minutes while in P (Park). If the warning is still there, turn off the engine and get everyone out of the vehicle until it cools down.

If there is no sign of steam, idle the engine for five minutes while parked. If the warning is still displayed, turn off the engine until it cools down.

Engine Overheating (Diesel)

Caution

Do not run the engine if there is a leak in the engine cooling system. This can cause a loss of all coolant and can damage the system and vehicle. Have any leaks fixed right away.

There is an engine coolant temperature gauge on the instrument cluster. See *Engine Coolant Temperature Gauge* ⇨ *115*.

If Steam Is Coming from the Engine Compartment

⚠ Warning

Steam and scalding liquids from a hot cooling system are under pressure. Turning the pressure cap, even a little, can cause them to come out at high speed and you could be burned. Never turn the cap when the cooling system, including the pressure cap, is hot. Wait for the cooling system and pressure cap to cool.

If No Steam Is Coming from the Engine Compartment

A Driver Information Center message, along with a low coolant condition, can indicate a serious problem.

If there is an engine overheat warning and the vehicle does not have a low coolant condition, and no steam is heard or seen, the problem may not be too serious. Sometimes the engine can get a little too hot when the vehicle:

- Climbs a long hill on a hot day.
- Stops after high-speed driving.
- Idles for long periods in traffic.

NOT FOR RESALE

- Tows a trailer.

If the Driver Information Center message comes on with no sign of steam, try this for a minute or so:

1. In heavy traffic, let the engine idle in N (Neutral) while stopped. If it is safe to do so, pull off the road, shift to P (Park) or N (Neutral), and let the engine idle.
2. Turn on the heater to full hot at the highest fan speed and open the window as necessary.

If the vehicle no longer has the overheat warning, the vehicle can be driven. Just to be safe, drive slower for about 10 minutes. If the warning does not come back on, drive normally and have the cooling system checked for proper fill and function.

If the warning continues, pull over, stop, and park the vehicle right away.

Overheated Engine Protection Operating Mode

Caution
After driving in the overheated engine protection operating mode, the engine oil will be severely degraded. Any repairs performed before the engine is cool may cause engine damage. Allow the engine to cool before attempting any repair. Repair the cause of coolant loss, change the oil, and reset the oil life system. See *Engine Oil (Gasoline)* ⇨ *329 Engine Oil (Diesel)* ⇨ *331*.

If an overheated engine condition exists and the ENGINE POWER IS REDUCED message displays, an overheat protection mode which alternates firing groups of cylinders helps to prevent engine damage. In this mode, a loss in power and engine performance will be noticed. This operating mode allows the vehicle to be driven to a safe place in an emergency. Driving extended distances and/or towing a trailer in the overheat protection mode should be avoided.

If the engine or transmission detects an impending hot fluid condition, then the transmission may force upshifts to limit temperatures. Downshifts may also be prevented in this instance. Normal operation may continue unless the display indicates there is a hot condition and engine should be idled.

Engine Fan

The vehicle has electric cooling fan(s). The fans may be heard spinning at low speed during most everyday driving. The fans may turn off if no cooling is required. Under heavy vehicle loading, trailer towing, high outside temperatures, or operation of the air conditioning system, the fans may change to high speed and an increase in fan noise may be heard. This is normal and indicates that the cooling system is functioning properly. The fans will change to low speed when additional cooling is no longer required.

The electric engine cooling fans may run after the engine has been turned off. This is normal and no service is required.

NOT FOR RESALE

Washer Fluid

What to Use

Caution

- Do not use washer fluid that contains any type of water repellent coating. This can cause the wiper blades to chatter or skip.
- Do not use engine coolant (antifreeze) in the windshield washer. It can damage the windshield washer system and paint.
- Do not mix water with ready-to-use washer fluid. Water can cause the solution to freeze and damage the washer fluid tank and other parts of the washer system.
- When using concentrated washer fluid, follow the manufacturer instructions for adding water.
- Fill the washer fluid tank only three-quarters full when it is very cold. This allows for fluid expansion if freezing occurs, which could damage the tank if it is completely full.

Always read the manufacturer's instructions before adding windshield washer fluid. If you are in an area where the temperature may fall below freezing, use a fluid that has sufficient protection against freezing.

Adding Washer Fluid

If equipped with a washer fluid level indicator, a message displays on the Driver Information Center when the washer fluid level is low.

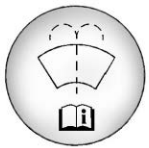

Open the cap with the washer symbol on it. Add washer fluid until the tank is full. See *Engine Compartment Overview* ⇨ *324* for reservoir location.

Brakes

Inspections

Visually inspect brake system components as follows:

- Brake lines and hoses for proper attachment, connections, binding, leaks, cracks, and chafing.
- Disc brake pads for wear and rotors for surface condition.
- Drum brake linings/shoes for wear or cracks.
- All other brake parts for cracks and leaks.

When tires are rotated, inspect drum brake linings or disc brake pads for wear.

Troubleshooting

Brake Pedal Travel

See your dealer if the brake pedal does not return to normal height, or if there is a rapid increase in pedal travel. This could be a sign that brake service may be required.

Brake Pulsation

If brakes are pulsating:

NOT FOR RESALE

- Inspect rotors, pads, linings for uneven wear. Resurface or replace as needed.
- Check torque on all wheel nuts. Properly torqued wheel nuts are necessary to help prevent brake pulsation. Evenly tighten wheel nuts in the proper sequence to torque specifications. See *Capacities and Specifications* ⇨ *420*.

Brake Squeal and Brake Wear Indicators

⚠ Warning

The brake wear warning sound means that soon the brakes will not work well. That could lead to a crash. When the brake wear warning sound is heard, have the vehicle serviced.

Disc brake linings have built-in wear indicators that make a high-pitched warning sound when the brake linings are worn, and new linings are needed. The sound can come and go or can be heard all the time when the vehicle is moving, except when applying the brake pedal firmly. Some driving conditions or climates can cause a brake squeal when the brakes are first applied, clearing up following several applications. This does not mean something is wrong with the brakes.

Replacing Brake System Parts

Caution

Continuing to drive with worn-out brake linings could result in costly brake repairs.

Brake pads should be replaced as complete axle sets.

Always replace brake system parts with new, approved replacement parts. If this is not done, the brakes may not work properly. The braking performance can change in many ways if the wrong brake parts are installed or if parts are improperly installed.

Brake Pad Life System

When to Change Brake Pads

This vehicle has a system that estimates the remaining life of the front and rear brake pads. Brake pad life remaining is displayed as a percentage for each axle. The system must be reset every time the brake pads are changed.

When the system has determined that the brake pads need to be replaced, a message will display, which may include mileage remaining.

Brake pads should always be replaced as complete axle sets.

How to Reset the Brake Pad Life System

The system will automatically detect when significantly worn brake pads are replaced. When the ignition is turned on after new pads and wear sensors are installed, a message will display. Follow the prompts to reset the system.

The brake pad life system can also be manually reset:

1. Place the vehicle in P (Park).
2. From the infotainment home screen, select Vehicle Status > Maintenance > Brake Pad Life. See *Vehicle Status* ⇨ *131*.

NOT FOR RESALE

3. Touch either RESET FRONT BRAKE PADS or RESET BACK BRAKE PADS. These will appear once the brake pads are replaced.
4. Touch RESET again to confirm. The percentage of brake pad life remaining will change to 100%.
5. Repeat for the other set of brake pads if they were also replaced.

See your dealer if the brake pads have been replaced and the reset option on the information display does not appear.

How to Disable the Brake Pad Life System

The brake pad life system can be turned off. This may be necessary if aftermarket brake pads without wear sensors are installed. When the system is turned off, the front and rear brake pad life percentages will not display. However, the built-in wear indicators that make a high-pitched warning sound when the brake pads are worn can still determine when the pads should be replaced. See *Brakes* ⇨ *347*.

To turn off the brake pad life system:

1. Place the vehicle in P (Park).
2. From the infotainment home screen, select Vehicle Status > Maintenance > Brake Pad Life. See *Vehicle Status* ⇨ *131*.
3. Select to turn Status and Notifications off.

To turn the brake pad life system back on, follow the same steps and select to turn the Status and Notifications back on.

Brake Fluid



The brake master cylinder reservoir is filled with GM approved DOT 4 brake fluid as indicated on the reservoir cap. See *Engine Compartment Overview* ⇨ *324* for the location of the reservoir.

When the brake fluid falls to a low level, the brake warning light comes on. See *Brake System Warning Light* ⇨ *122*.

Checking Brake Fluid

⚠ Warning

If too much brake fluid is added, it can spill on the engine and burn, if the engine is hot enough. You or others could be burned, and the vehicle could be damaged. Add brake fluid only when work is done on the brake hydraulic system.

Always clean the brake fluid reservoir cap and the area around the cap before removing it.

To check the brake fluid, place the vehicle in P (Park) on a level surface. The brake fluid level should be between the Min and Max marks on the brake fluid reservoir.

There are only two reasons why brake fluid may be low:

- Normal brake lining wear. When new linings are installed, the fluid level will return to normal.
- Brake system fluid leak. With a leak, the brakes will not work well. To have the brake hydraulic system fixed, see your dealer.

NOT FOR RESALE

Do not top off the brake fluid. Adding fluid does not correct a leak. If fluid is added when the linings are worn, there will be too much fluid when new brake linings are installed. Add or remove fluid, as necessary, only when work is done on the brake hydraulic system.

Brake fluid absorbs water over time which degrades the effectiveness of the brake fluid. Replace brake fluid at the specified intervals to prevent increased stopping distance. See *Maintenance Schedule* ⇨ *412*.

What to Add

⚠ Warning

The wrong or contaminated brake fluid could result in damage to the brake system. This could result in the loss of braking leading to a possible injury. Always use the proper GM approved brake fluid.

Caution

If brake fluid is spilled on the vehicle's painted surfaces, the paint finish can be damaged. Immediately wash off any painted surface.

Use only GM approved DOT 4 brake fluid from a clean, sealed container. See *Recommended Fluids and Lubricants* ⇨ *416*.

Battery - North America

The original equipment battery is maintenance free. Do not remove the cap and do not add fluid.

Refer to the replacement number shown on the original battery label when a new battery is needed. See *Engine Compartment Overview* ⇨ *324* for battery location.

Stop/Start System

If equipped, the Stop/Start system shuts off the engine to help conserve fuel. See *Stop/Start System* ⇨ *211*.

This vehicle has an Absorbed Glass Mat (AGM) 12-volt battery. Installation of a standard 12-volt battery will result in reduced 12-volt battery life. When using a 12-volt battery charger on the 12-volt Absorbed Glass Mat (AGM) battery, some chargers have an Absorbed Glass Mat (AGM) battery setting on the charger. If available, use the Absorbed Glass Mat (AGM) setting on the charger to limit charge voltage to 14.8 volts. Follow the charger manufacturer's instructions.

⚠ Warning

WARNING: Battery posts, terminals and related accessories can expose you to chemicals including lead and lead compounds, which are known to the State of California to cause cancer and birth defects or other reproductive harm. Wash hands after handling. For more information go to www.P65Warnings.ca.gov.

See *California Proposition 65 Warning* ⇨ *1*.

Vehicle Storage

⚠ Warning

Batteries have acid that can burn you and gas that can explode. You can be badly hurt if you are not careful. Always wear eye protection. See *Jump Starting - North America* ⇨ *393* for tips on working around a battery without getting hurt.

NOT FOR RESALE

Infrequent Usage: Remove the black, negative (−) cable from the battery to keep the battery from running down.

Extended Storage: Remove the black, negative (−) cable from the battery or use a battery trickle charger.

Negative Battery Cable Disconnection

⚠ Warning

Before disconnecting the negative battery cable, turn off all features, turn the ignition off, and remove the key, if equipped, from the vehicle. If this is not done, you or others could be injured, and the vehicle could be damaged.

Caution

If the battery is disconnected with the ignition on or the vehicle in Retained Accessory Power (RAP), the OnStar back-up battery will be permanently discharged and will need to be replaced.

1. Make sure the lights, features, and accessories are turned off.
2. Turn the ignition off and remove the key, if equipped.

For vehicles equipped with the Stop/Start system:

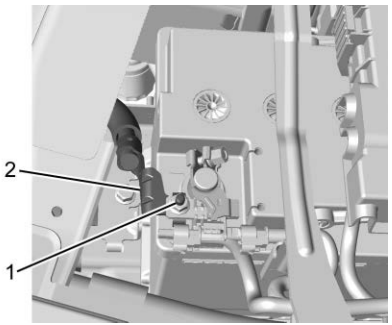

1. Loosen and remove the negative battery cable nut (1) at the battery sensor connection.
2. Remove the negative battery cable (2) from the battery sensor stud.
3. Cover the negative battery cable terminal, battery sensor stud, and negative battery post with a non-conductive material to prevent any contact with the negative battery cable.

For vehicles not equipped with the Stop/Start system:

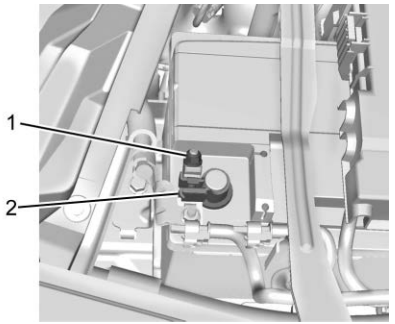

1. Loosen the negative battery cable nut (1).
2. Remove the negative battery cable clamp (2) from the negative battery post.
3. Cover the negative battery cable clamp, and negative battery post with a non-conductive material to prevent any contact with the negative battery cable.

NOT FOR RESALE

Negative Battery Cable Reconnection

Caution

When reconnecting the battery:

- Use the original nut from the vehicle to secure the negative battery cable. Do not use a different nut. If you need a replacement nut, see your dealer.
- Tighten the nut with a hand tool. Do not use an impact wrench or power tools to tighten the nut.

The vehicle could be damaged if these guidelines are not followed.

Caution

Do not use paints, lubricants, or corrosion inhibitors on the nut that secures the negative battery cable to the vehicle. This could damage the vehicle.

For vehicles equipped with the Stop/Start system:

1. Install the negative battery cable to the battery sensor stud.
2. Install the negative battery cable nut to the battery sensor stud and tighten.
3. Turn the ignition on.

For vehicles not equipped with the Stop/Start system:

1. Install the negative battery cable clamp to the negative battery post.
2. Tighten the negative battery cable nut.
3. Turn the ignition on.

Four-Wheel Drive

Transfer Case

When to Check Lubricant

Refer to *Maintenance Schedule* ⇨ *412* to determine when to check the lubricant.

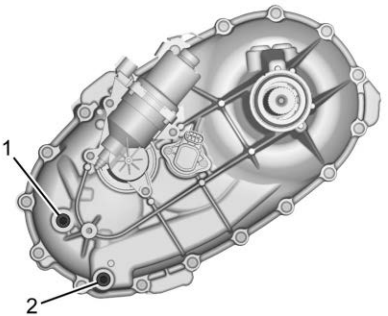

1. Fill Plug
2. Drain Plug

To get an accurate reading, the vehicle should be on a level surface.

If the level is below the bottom of the fill plug (1) hole, located on the transfer case, some lubricant will need to be added. Add enough lubricant to raise the level to the bottom of the fill plug (1) hole. Use care not to overtighten the plug.

When to Change Lubricant

Refer to *Maintenance Schedule* ⇨ *412* to determine how often to change the lubricant.

NOT FOR RESALE

What to Use

Refer to *Recommended Fluids and Lubricants* ⇨ *416* to determine what kind of lubricant to use.

Front Axle

When to Check Lubricant

It is not necessary to regularly check the front axle fluid unless a leak is suspected or an unusual noise is heard. A fluid loss could indicate a problem. Have it inspected and repaired. This service can be complex. See your dealer.

Do not directly power wash the transfer case and/or front/rear axle output seals. High pressure water can overcome the seals and contaminate the fluid. Contaminated fluid will decrease the life of the transfer case and/or drive axles and should be replaced.

Rear Axle

When to Check Lubricant

It is not necessary to regularly check the rear axle fluid unless a leak is suspected or an unusual noise is heard. A fluid loss could indicate a problem. Have it inspected and repaired. This service can be complex. See your dealer.

Do not directly power wash the transfer case and/or front/rear axle output seals. High pressure water can overcome the seals and contaminate the fluid. Contaminated fluid will decrease the life of the transfer case and/or drive axles and should be replaced.

Park Brake and P (Park) Mechanism Check

⚠ Warning

When you are doing this check, the vehicle could begin to move. You or others could be injured and property could be damaged. Make sure there is room in front of the vehicle in case it begins to roll. Be ready to apply the regular brake at once should the vehicle begin to move.

To check the parking brake and P (Park) mechanism:

1. Park on a steep hill with the vehicle facing downhill.
2. Keep your foot on the regular brake and set the parking brake.
3. Check the holding ability as follows:
   - **Parking brake:** Turn the vehicle on and shift to N (Neutral). Slowly remove your foot from the brake pedal until only the parking brake is holding the vehicle.
   - **P (Park) mechanism:** Turn the vehicle on and shift to P (Park). Then release the parking brake and slowly remove your foot from the regular brake pedal.

If there is excessive vehicle roll during these checks, contact your dealer for service.

Wiper Blade Replacement

Caution

Allowing the wiper arm to touch the windshield when no wiper blade is installed could damage the windshield. Any damage that occurs would not be covered by the vehicle warranty. Do not allow the wiper arm to touch the windshield.

NOT FOR RESALE

Windshield wiper blades should be replaced periodically. See *Maintenance Schedule* ⇨ *412*.

Replacement blades come in different types and are removed in different ways. For proper type and length, see your dealer.

Front Wiper Blade Replacement

To replace the wiper blade:

1. Pull the wiper assembly away from the windshield.

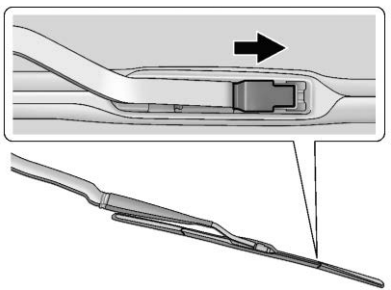

2. Lift up on the latch in the middle of the wiper blade where the wiper arm attaches.
3. With the latch open, pull the wiper blade down toward the windshield far enough to release it from the J-hooked end of the wiper arm.
4. Remove the wiper blade.
5. Reverse Steps 1–3 for wiper blade replacement.

Glass Replacement

If the windshield or front side glass must be replaced, see your dealer to determine the correct replacement glass.

Windshield Replacement

A replacement windshield must be GM approved and installed according to GM specifications to maintain its features and functionality (for example, Advanced Driver Assistance Systems).

If your vehicle is equipped with any of the following features, see your dealer:

- Advanced Driver Assistance Systems. See *Advanced Driver Assistance Systems* ⇨ *276*.
- Head-Up Display. See *Head-Up Display (HUD)* ⇨ *134*.

Gas Strut(s)

⚠ Warning

If the gas struts that hold open the hood, trunk, and/or liftgate fail, you or others could be seriously injured. Take the vehicle to your dealer for service immediately. Visually inspect the gas struts for signs of wear, cracks, or other damage periodically. Check to make sure the hood/trunk/liftgate is held open with enough force. If struts are failing to hold the hood/trunk/liftgate, do not operate. Have the vehicle serviced.

Caution

Do not apply tape or hang any objects from gas struts. Also do not push down or pull on gas struts. This may cause damage to the vehicle.

Your vehicle may be equipped with gas strut(s) to provide assistance in lifting and holding open the hood/trunk/liftgate system in full open position.

NOT FOR RESALE

See your dealer to have the gas strut(s) serviced. See *Maintenance Schedule* ⇨ *412*.



Hood

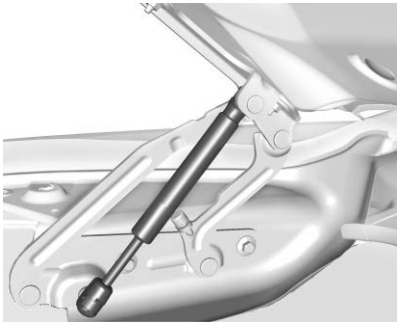

Trunk



Liftgate

Headlight Aiming

Front Headlight Aiming

Headlight aim has been preset and should need no further adjustment.

If the vehicle is damaged in a crash, the headlight aim may be affected. If adjustment to the headlights is necessary, see your dealer.

Bulb Replacement

LED Lighting

This vehicle is equipped with LED light sources for all exterior lights.

The light assemblies do not contain any serviceable light sources (e.g., incandescent bulbs).

For replacement of any LED lighting assembly, contact your dealer.

Electrical System

Electrical System Overload

The vehicle has fuses and circuit breakers to protect the wires powering the devices in your vehicle against an electrical system overload.

NOT FOR RESALE

Circuit breakers open and close to protect the circuit when the electrical load is too heavy. The internal filament may permanently open under a heavy load. If this happens, replace the fuse to restore the protected electrical function and reduce the risk of circuit overload and electrical fire.

Fuses and circuit breakers protect the wires powering the devices in your vehicle.

To check a fuse, look at the band inside the fuse. If the band is broken or melted, replace the fuse. Be sure to replace a bad fuse with a fuse of the identical size and rating.

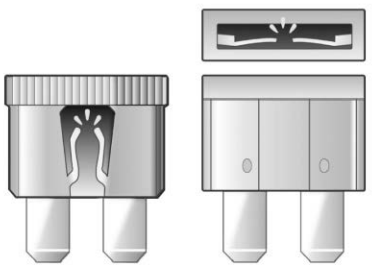



Replacing a Blown Fuse

If you need to replace a fuse, choose a fuse of the same amperage from the fuse block. Use either a SPARE fuse or a non-essential feature if there are no SPARE fuses of the correct amperage. Replace the blown fuse as soon as possible.

To replace a blown fuse:

1. Turn off the vehicle.
2. Locate the fuse puller in the underhood fuse block.

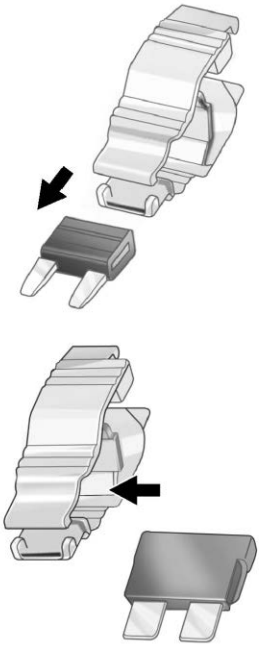

3. Use the fuse puller to remove the fuse from the top or side, as shown above.

NOT FOR RESALE

4. If the fuse must be replaced immediately, temporarily replace the fuse with one of the same amperage from the fuse block. Choose a non-essential vehicle feature to safely operate the vehicle. Repeat Steps 2–3.
5. Insert the replacement fuse into the empty slot of the blown fuse.

See your dealer to replace the blown fuse.

Headlight Wiring

An electrical overload may cause the lights to go on and off, or in some cases to remain off. See your dealer if the lights go on and off or remain off.

Windshield Wipers

Overload due to heavy snow or ice may cause damage to the wiper linkage. Always clear heavy snow and ice from the windshield before using the windshield wipers.

If the wiper motor overheats due to heavy snow or ice, the windshield wipers will stop until the motor cools. Once the motor has cooled down, the wipers will restart.

Address any electrical overload as soon as possible. See your dealer.

Fuses and Circuit Breakers

⚠ Danger

Fuses and circuit breakers are marked with their ampere rating. Do not exceed the specified amperage rating when replacing fuses and circuit breakers. Use of an oversized fuse or circuit breaker can result in a vehicle fire. You and others could be seriously injured or killed.

⚠ Warning

Installation or use of fuses that do not meet GM's original fuse specifications is dangerous. The fuses could fail, and result in a fire. You or others could be injured or killed, and the vehicle could be damaged.

The fuses and circuit breakers protect the electrical system from short circuits, greatly reducing the chance of electrical damage or fire.



See *Accessories and Modifications* ⇨ *321* and *General Information* ⇨ *321*.

To check or replace a blown fuse, see *Electrical System Overload* ⇨ *355*.

Engine Compartment Fuse Block

The engine compartment fuse block is in the engine compartment, on the passenger side of the vehicle. See *Engine Compartment Overview* ⇨ *324*.

Caution

Spilling liquid on any electrical component on the vehicle may damage it. Always keep the covers on any electrical component.

NOT FOR RESALE

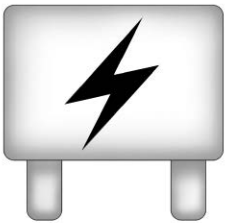

Press the clips on the sides and lift the cover to access the fuse block.

A fuse puller is available in this fuse block.

NOT FOR RESALE

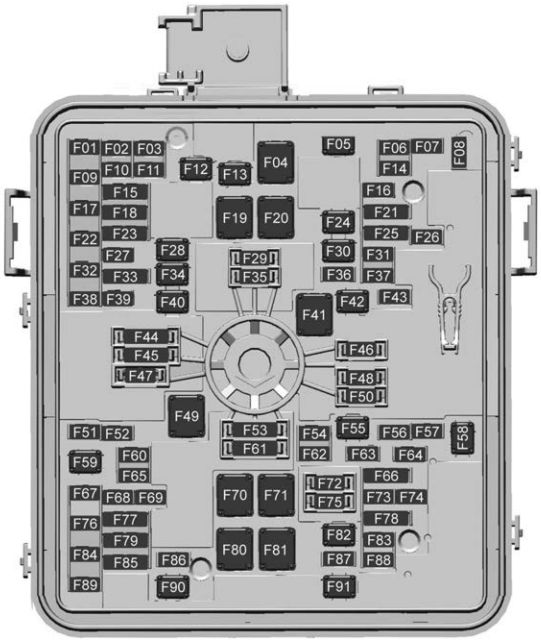

The vehicle may not be equipped with all the fuses, relays, and features shown. For the most accurate fuse amperage ratings and functions, refer to the fuse label.

Fuses	Usage
F01	ICCM – Integrated Chassis Control Module
F02	TTPM – Trailer Tire Pressure Monitor
F03	MFEGMAJOR HI
F04	COOL FAN MTR RT
F05	FUEL HEATER
F06	–
F07	TRANS_AUX_OIL_PUMP
F08	SECONDARY AXLE MTR
F09	FTZM – Fuel Tank Zone Module
F10	TRLR REV LAMPS
F11	–
F12	TIM1 – Trailer Interface Module 1
F13	TRAILER CONNECTOR

NOT FOR RESALE

Fuses	Usage
F14	WRAF/O2 SNSR – Wide Range Air Fuel/O2 Sensor
F15L	SPARE
F15R	MFEGMI NOR
F16	ODD INJ/ECM – Odd Injector/Electronic Control Module
F17	–
F18L	SADS – Semi-Active Dampening System
F18R	DEFC_BATT1_CANISTER – Diesel Exhaust Fluid Controller Battery 1 Canister
F19	TRLR_BRAKE_MOD
F20	COOL_FAN_MTR LT
F21L	AEROSHUTTER
F21R	SPARE

Fuses	Usage
F22	TAIL GATE MOD
F23L	TAIL_LAMP_LT
F23R	TAIL_LAMP_RT
F24	COOL_FAN_MTR_LWR
F25L	POSTO2_TIAP_ENGSNSR
F25R	PREO2_CAM_INTAKE_EX H_CANISTER
F26	A/C CLUTCH
F27	PWR/TRN SNSR 1
F28	TIM 2 – Trailer Interface Module 2
F30	TCCM – Transfer Case Control Module
F31	ECM – Electronic Control Module
F32	PRK LAMP TRLR
F33L	RADARS 2

Fuses	Usage
F33R	VKM SENS 2 – Virtual Key Module Sensor 2
F34	ARB MOD – Articulated Running Board Module
F36	PWRTRN_SNSR 2
F37	EVEN INJ / ECM
F38	TRLR STOP TRN LAMP LT
F39	TRLR STOP TRN LAMP RT
F40	DEFC BATT2 – Diesel Exhaust Fluid Controller Battery 2
F41	STRTR PINION – Starter Pinion
F42	STRTR – Starter
F43	ECM – Electronic Control Module
F49	–
F51	–

NOT FOR RESALE

Fuses	Usage
F52	OSRVM-LT/RT PRK LAMP – Outside Rear View Mirror Left/Right Park Light
F54	GND1/COIL GND
F55	REAR DEFOG
F56	ACP3 – ADAS Computing Platform 3
F57	CABIN COOL PUMP
F58	FRT WPR
F59	UPFITTER PROVISION
F60	–
F62	ELM 3 – Exterior Lighting Module 3
F63	DRV_COORV_MSM1_MEM
F64	ELM 1 – Exterior Lighting Module 1
F65	ELM 4 – Exterior Lighting Module 4
F66L	RADARS 1
F66R	VKM_SENS1– Virtual Key Module Sensor 1
F67	–
F68	HDLP LT – Head Light Left
F69	ELM 6 – Exterior Lighting Module 6
F70	LHIEC_1 – Left Interior Electrical Center 1
F71	DC/AC INVERTER
F73	–
F74	BCM 2 – Body Control Module 2
F76	HDLP RT – Head Light Right
F77L	–
F77R	–
F78L	–
F78R	–
F79L	–
F79R	–
F80	EBCM – Electronic Brake Control Module
F81	RHIEC2 – Right Interior Electrical Center 2
F82	–
F83	ELM 5 – Exterior Lighting Module 5
F84	ELM 7 – Exterior Lighting Module 7
F85L	–
F85R	–
F86	HORN

NOT FOR RESALE

Fuses	Usage
F87	FRT WASHER PUMP
F88	GLOVE BOX RELEASE MOTOR
F89	UNDERBODY WASHER PUMP
F90	FPM2
F91	–

Instrument Panel Fuse Block



The instrument panel fuse block access door is on the passenger side edge of the instrument panel.

Pull off the cover to access the front of the fuse block.



The vehicle may not be equipped with all the fuses, relays, and features shown. For the most accurate fuse amperage ratings and functions, refer to the fuse label.

NOT FOR RESALE

Fuses	Usage
CB1	–
F01	SUNROOF – Sunroof
F02	BCM 3 – Body Control Module 3
F03	DLC – Data Link Connector
F04	TILT_UVM
F05	RFWINDOW_SW_UQ3_VCU _AMP
F06	SDM_AOS – Sensing Diagnostic Module Automatic Occupant Sensor
F07	STG_WHL_CTRL – Steering Wheel Control
F08	HTD_WHL – Heated Wheel
F09L	–
F09R	–
F10L	LINSW_AUX_JACK_FPI
F10R	ETRS – Electronic Transmission Range Select
F11L	MISC BODY
F11R	SEAT FAN
F12	SEO_USBCHARGE
F13L	RFA_AUX_JACK_WCM
F13R	FPI_DISPLAY
F14L	ECM/TCM/TCCM – Engine/ Transmission/Transfer Case Modules
F14R	MISC IP HEADLINER
F15	SCL – Steering Column Lock
F16L	RF_RR_WNDW_MTR – Window Motor
F16R	RF_RR_WNDW_MTR – Window Motor
F17L	MODULE-FRONT CAMERA & OHC & VKSSNSR (For Variant model)
F17R	MODULE PARK ASSIST & ACP 2 (For Variant model)
F18L	FRT_RR_HTD_CLD_SEAT
F18R	FRT_RR_HTD_CLD_SEAT
F19	ACCY COOLER
F20L	CGM_COL_LCK
F20R	TCP
F21L	VCU
F21R	SPOT LIGHT
F22	TIM_DEFC_EXHVLV_ICCM_I GN
F23L	LF_LR_WINDOW_MTR
F23R	LF_LR_WINDOW_MTR
F24	ELM 2

NOT FOR RESALE

Fuses	Usage
F25	RLY Coil_GROUND
F26	IPD_HUD_VCD
F27	RR SLD WNDW MOTOR OPEN
F27	RR SLD WNDW MOTOR CLOSE
F28	LFWINDOW SWITCHS_VKBM_VKS
F29	TCM/P02 ECM
F30	AUX_AMP
F31	BCM 1
F32	BCM 4
F33	DC_DC_BATT 2
F34	DC_DC_BATT 1
F35	DRVR_PWR_SEAT
F36	AMP
F37	CODRVR_PWRSEAT
F38	FT_BLOWER

Wheels and Tires

Tires

Every new GM vehicle has high-quality tires made by a leading tire manufacturer. See the warranty manual for information regarding the tire warranty and where to get service. For additional information refer to the tire manufacturer.

⚠ Warning

- Poorly maintained and improperly used tires are dangerous.
- Overloading the tires can cause overheating as a result of too much flexing. There could be a blowout and a serious crash. See *Vehicle Load Limits* ⇨ *201*.
- Underinflated tires pose the same danger as overloaded tires. The resulting crash could cause serious injury. Check all tires frequently

(Continued)

Warning (Continued)

to maintain the recommended pressure. Tire pressure should be checked when the tires are cold.

- Overinflated tires are more likely to be cut, punctured, or broken by a sudden impact — such as when hitting a pothole. Keep tires at the recommended pressure.
- Worn or old tires can cause a crash. If the tread is badly worn, replace them.
- Replace any tires that have been damaged by impacts with potholes, curbs, etc.
- Improperly repaired tires can cause a crash. Only your dealer or an authorized tire service center should repair, replace, dismount, and mount the tires.

(Continued)

NOT FOR RESALE

Warning (Continued)

- Do not spin the tires in excess of 56 km/h (35 mph) on slippery surfaces such as snow, mud, ice, etc. Excessive spinning may cause the tires to explode.

All-Season Tires

This vehicle may come with all-season tires. These tires are designed to provide good overall performance on most road surfaces and weather conditions. Original equipment tires designed to GM's specific Tire Performance Criteria (TPC) have a TPC specification code molded onto the sidewall.

Consider installing winter tires on the vehicle if frequent driving on snow or ice-covered roads is expected. All-season tires provide adequate performance for most winter driving conditions, but they may not offer the same level of traction or performance as winter tires on snow or ice-covered roads. See *Winter Tires* ⇨ *365*.

Winter Tires

This vehicle was not originally equipped with winter tires. Winter tires are designed for increased traction on snow and ice-covered roads. Consider installing winter tires on the vehicle if frequent driving on ice or snow covered roads is expected. See your dealer for details regarding winter tire availability and proper tire selection. Also, see *Buying New Tires* ⇨ *378*.

With winter tires, there may be decreased dry road traction, increased road noise, and shorter tread life. After changing to winter tires, be alert for changes in vehicle handling and braking.

If using winter tires:

- Use tires of the same brand and tread type on all four wheel positions.
- Use only radial ply tires of the same size, load range, and speed rating as the original equipment tires.

Winter tires with the same speed rating as the original equipment tires may not be available for H, V, W, Y, and ZR speed rated tires. If winter tires with a lower speed rating are chosen, never exceed the tire's maximum speed capability.

All-Terrain Tires

This vehicle may have all-terrain or mud-terrain tires. These tires provide good performance on most road surfaces, weather conditions, and for off-road driving. See *Off-Road Driving* ⇨ *193*.

The tread pattern on these tires may wear more unevenly than other tires. Consider rotating the tires more frequently than at 12 000 km (7,500 mi) intervals if irregular wear is noted when the tires are inspected. See *Tire Inspection* ⇨ *376*.

Tire Sidewall Labeling

Useful information about a tire is molded into its sidewall. The examples show a typical passenger vehicle tire/full size spare tire, and light truck tire sidewall.

NOT FOR RESALE

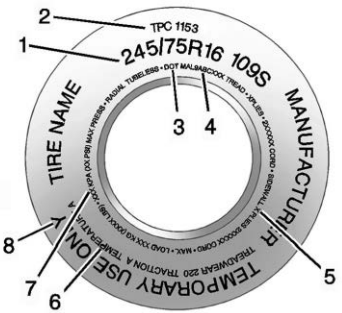

Passenger Tire/Spare Tire

(1) Tire Size : The tire size code is a combination of letters and numbers used to define a particular tire's width, height, aspect ratio, construction type, and service description. See the "Tire Size" illustration in this section.

(2) TPC Spec (Tire Performance Criteria Specification) : Original equipment tires designed to GM's specific tire performance criteria have a TPC specification code molded onto the sidewall. GM's TPC specifications meet or exceed all federal safety guidelines.

(3) DOT (Department of Transportation) : The Department of Transportation (DOT) code indicates that the tire is in compliance with the U.S. Department of Transportation Motor Vehicle Safety Standards.

DOT Tire Date of Manufacture : The last four digits of the TIN indicate the tire manufactured date. The first two digits represent the week and the last two digits, the year. For example, the third week of the year 2020 would have a 4-digit DOT date of 0320. Week 01 is the first full week (Sunday through Saturday) of each year.

(4) Tire Identification Number (TIN) : The letters and numbers following the DOT code are the Tire Identification Number (TIN). The TIN shows the manufacturer and plant code, tire size, and date the tire was manufactured. The TIN is molded onto both sides of the tire, although only one side may have the date of manufacture.

(5) Tire Ply Material : The type of cord and number of plies in the sidewall and under the tread.

(6) Uniform Tire Quality Grading (UTQG) : Tire manufacturers are required to grade tires based on three performance factors: treadwear, traction, and temperature resistance. For more information, see *Uniform Tire Quality Grading* ⇨ *380*.

(7) Maximum Cold Inflation Load Limit : Maximum load that can be carried and the maximum pressure needed to support that load. For information on recommended tire pressure see *Tire Pressure* ⇨ *370* and *Vehicle Load Limits* ⇨ *201*.

(8) Temporary Use Only : Only use a temporary spare tire until the road tire is repaired and replaced. This spare tire should not be driven on over 112 km/h (70 mph), or 88 km/h (55 mph) when pulling a trailer, with the proper inflation pressure. See *Full-Size Spare Tire* ⇨ *392*.

NOT FOR RESALE

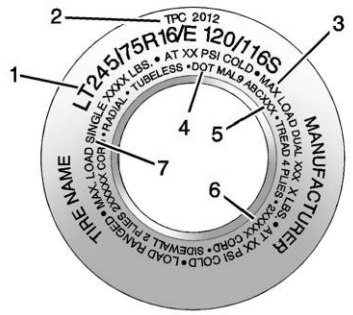

Light Truck (LT-Metric) Tire

(1) Tire Size : The tire size code is a combination of letters and numbers used to define a particular tire's width, height, aspect ratio, construction type, and service description. See the "Tire Size" illustration in this section.

(2) TPC Spec (Tire Performance Criteria Specification) : Original equipment tires designed to GM's specific tire performance criteria have a TPC specification code molded onto the sidewall. GM's TPC specifications meet or exceed all federal safety guidelines.

(3) Dual Tire Maximum Load : Maximum load that can be carried and the maximum pressure needed to support that load when used in a dual configuration. For information on recommended tire pressure see *Tire Pressure* ⇨ *370* and *Vehicle Load Limits* ⇨ *201*.

(4) DOT (Department of Transportation) : The Department of Transportation (DOT) code indicates that the tire is in compliance with the U.S. Department of Transportation Motor Vehicle Safety Standards.

DOT Tire Date of Manufacture : The last four digits of the TIN indicate the tire manufactured date. The first two digits represent the week and the last two digits, the year. For example, the third week of the year 2020 would have a 4-digit DOT date of 0320. Week 01 is the first full week (Sunday through Saturday) of each year.

(5) Tire Identification Number (TIN) : The letters and numbers following the DOT code are the Tire Identification Number (TIN). The TIN shows the manufacturer and plant code, tire size, and date the tire was manufactured. The TIN is molded onto both sides of the tire, although only one side may have the date of manufacture.

(6) Tire Ply Material : The type of cord and number of plies in the sidewall and under the tread.

(7) Single Tire Maximum Load : Maximum load that can be carried and the maximum pressure needed to support that load when used as a single. For information on recommended tire pressure see *Tire Pressure* ⇨ *370* and *Vehicle Load Limits* ⇨ *201*.

Tire Designations

Tire Size

The examples show a typical passenger vehicle and light truck tire size.

NOT FOR RESALE

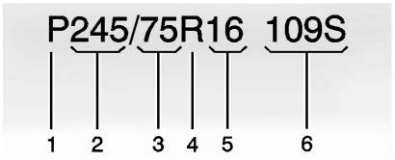

Passenger (P-Metric) Tire

(1) Passenger (P-Metric) Tire : The United States version of a metric tire sizing system. The letter “P” as the first character in the tire size means a passenger vehicle tire engineered to standards set by the U.S. Tire and Rim Association.

(2) Tire Width : The 3-digit number indicates the tire section width in millimeters from sidewall to sidewall.

(3) Aspect Ratio : A 2-digit number that indicates the tire height-to-width measurements. For example, if the tire size aspect ratio is 75, as shown in item (3) of the illustration, it would mean that the tire's sidewall is 75 percent as high as it is wide.

(4) Construction Code : A letter code is used to indicate the type of ply construction in the tire. The letter “R” means radial ply construction; the letter “D” means diagonal or bias ply construction.

(5) Rim Diameter : Diameter of the wheel in inches.

(6) Service Description : These characters represent the load index and speed rating of the tire. The load index represents the load carrying capacity a tire is certified to carry. The speed rating is the maximum speed a tire is certified to carry a load.

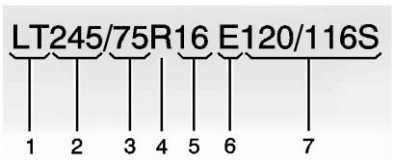

Light Truck (LT-Metric) Tire

(1) Light Truck (LT-Metric) Tire : The United States version of a metric tire sizing system. The letters “LT” as the first two characters in the tire size mean a light truck tire engineered to standards set by the U.S. Tire and Rim Association.

(2) Tire Width : The 3-digit number indicates the tire section width in millimeters from sidewall to sidewall.

(3) Aspect Ratio : A 2-digit number that indicates the tire height-to-width measurements. For example, if the tire size aspect ratio is 75, as shown in item (3) of the light truck (LT-Metric) tire illustration, it would mean that the tire's sidewall is 75 percent as high as it is wide.

(4) Construction Code : A letter code is used to indicate the type of ply construction in the tire. The letter “R” means radial ply construction; the letter “D” means diagonal or bias ply construction.

(5) Rim Diameter : Diameter of the wheel in inches.

(6) Load Range : Load Range.

(7) Service Description : The service description indicates the load index and speed rating of a tire. If two numbers are given as in the example, 120/116, then

NOT FOR RESALE

this represents the load index for single versus dual wheel usage (single/dual). The speed rating is the maximum speed a tire is certified to carry a load.

Tire Terminology and Definitions

Air Pressure : The amount of air inside the tire pressing outward on each square inch of the tire. Air pressure is expressed in kPa (kilopascal) or psi (pounds per square inch).

Aspect Ratio : The relationship of a tire's height to its width.

Belt : A rubber coated layer of cords that is located between the plies and the tread. Cords may be made from steel or other reinforcing materials.

Bead : The tire bead contains steel wires wrapped by steel cords that hold the tire onto the rim.

Bias Ply Tire : A pneumatic tire in which the plies are laid at alternate angles less than 90 degrees to the centerline of the tread.

Cold Tire Pressure : The amount of air pressure in a tire, measured in kPa (kilopascal) or psi (pounds per square inch) before a tire has built up heat from driving. See *Tire Pressure* ⇨ *370*.

DOT Markings : A code molded into the sidewall of a tire signifying that the tire is in compliance with the U.S. Department of Transportation (DOT) Motor Vehicle Safety Standards. The DOT code includes the Tire Identification Number (TIN), an alphanumeric designator which can also identify the tire manufacturer, production plant, brand, and date of production.

GVWR : Gross Vehicle Weight Rating. See *Vehicle Load Limits* ⇨ *201*.

GAWR FRT : Gross Axle Weight Rating for the front axle. See *Vehicle Load Limits* ⇨ *201*.

GAWR RR : Gross Axle Weight Rating for the rear axle. See *Vehicle Load Limits* ⇨ *201*.

Intended Outboard Sidewall : The side of an asymmetrical tire, that must always face outward when mounted on a vehicle.

Kilopascal (kPa) : The metric unit for air pressure.

Light Truck (LT-Metric) Tire : A tire used on light duty trucks and some multipurpose passenger vehicles.

Load Index : An assigned number ranging from 1 to 279 that corresponds to the load carrying capacity of a tire.

Maximum Inflation Pressure : The maximum air pressure to which a cold tire can be inflated. The maximum air pressure is molded onto the sidewall.

Maximum Load Rating : The load rating for a tire at the maximum permissible inflation pressure for that tire.

Occupant Distribution : Designated seating positions.

Outward Facing Sidewall : The side of an asymmetrical tire that has a particular side that faces outward when mounted on a vehicle. The side of the tire that contains a whitewall, bears white lettering, or bears manufacturer, brand, and/or model name

NOT FOR RESALE

molding that is higher or deeper than the same moldings on the other sidewall of the tire.

Passenger (P-Metric) Tire : A tire used on passenger cars and some light duty trucks and multipurpose vehicles.

Recommended Inflation Pressure : Vehicle manufacturer's recommended tire inflation pressure as shown on the tire placard. See *Tire Pressure* ⇨ *370* and *Vehicle Load Limits* ⇨ *201*.

Radial Ply Tire : A pneumatic tire in which the ply cords that extend to the beads are laid at 90 degrees to the centerline of the tread.

Rim : A metal support for a tire and upon which the tire beads are seated.

Sidewall : The portion of a tire between the tread and the bead.

Speed Rating : An alphanumeric code assigned to a tire indicating the maximum speed at which a tire can operate.

Traction : The friction between the tire and the road surface. The amount of grip provided.

Tread : The portion of a tire that comes into contact with the road.

Treadwear Indicators : Narrow bands, sometimes called wear bars, that show across the tread of a tire when only 1.6 mm (1/16 in) of tread remains. See *When It Is Time for New Tires* ⇨ *377*.

UTQGS (Uniform Tire Quality Grading Standards) : A tire information system that provides consumers with ratings for a tire's traction, temperature, and treadwear. Ratings are determined by tire manufacturers using government testing procedures. The ratings are molded into the sidewall of the tire. See *Uniform Tire Quality Grading* ⇨ *380*.

Vehicle Capacity Weight : The number of designated seating positions multiplied by 68 kg (150 lbs) plus the rated cargo load. See *Vehicle Load Limits* ⇨ *201*.

Vehicle Maximum Load on the Tire : Load on an individual tire due to curb weight, accessory weight, occupant weight, and cargo weight.

Vehicle Placard : A label permanently attached to a vehicle showing the vehicle's capacity weight and the original equipment tire size and recommended inflation pressure. See "Tire and Loading Information Label" under *Vehicle Load Limits* ⇨ *201*.

Tire Pressure

Tires need the correct amount of air pressure to operate effectively.

⚠ Warning

Neither tire underinflation nor overinflation is good. Underinflated tires, or tires that do not have enough air, can result in:

- Tire overloading and overheating, which could lead to a blowout
- Premature or irregular wear
- Poor handling

(Continued)

NOT FOR RESALE

Warning (Continued)

- Reduced fuel economy for internal combustion engine vehicles
- Reduced range for electric vehicles

Overinflated tires, or tires that have too much air, can result in:

- Unusual wear
- Poor handling
- Rough ride
- Needless damage from road hazards

The Tire and Loading Information label on the vehicle indicates the original equipment tires and the correct cold tire inflation pressures. The recommended pressure is the minimum air pressure needed to support the vehicle's maximum load carrying capacity.

For additional information regarding how much weight the vehicle can carry, and an example of the Tire and Loading Information label, see *Vehicle Load Limits* ⇨ *201*. How the vehicle is loaded affects vehicle handling and ride comfort. Never load the vehicle with more weight than it was designed to carry.

When to Check

Check the pressure of the tires once a month or more.

Do not forget the spare, if the vehicle has one. See *Full-Size Spare Tire* ⇨ *392* for additional information.

How to Check

Use a good quality pocket-type gauge to check tire pressure. Proper tire inflation cannot be determined by looking at the tire. Check the tire inflation pressure when the tires are cold, meaning the vehicle has not been driven for at least three hours or no more than 1.6 km (1 mi).

Remove the valve cap from the tire valve stem. Press the tire gauge firmly onto the valve to get a pressure measurement. If the cold tire inflation pressure matches the recommended pressure on the Tire and Loading Information label, no further adjustment is necessary. If the inflation pressure is low, add air until the recommended pressure is reached. If the inflation pressure is high, press on the metal stem in the center of the tire valve to release air.

Re-check the tire pressure with the tire gauge.

Put the valve caps back on the valve stems to keep out dirt and moisture. Use only valve caps designed for the vehicle by GM. Tire Pressure Monitor System sensors could be damaged and would not be covered by the vehicle warranty.

Tire Pressure for High-Speed Operation

⚠ Warning

Driving at high speeds, 160 km/h (100 mph) or higher, puts additional strain on tires. Sustained high-speed driving causes excessive heat buildup and can

(Continued)

NOT FOR RESALE

Warning (Continued)

cause sudden tire failure. This could cause a crash, and you or others could be killed. Some high-speed rated tires require inflation pressure adjustment for high-speed operation. When speed limits and road conditions allow the vehicle to be driven at high speeds, make sure the tires are rated for high-speed operation, are in excellent condition, and are set to the correct cold tire inflation pressure for the vehicle load.

Tire Pressure Monitor System

The Tire Pressure Monitor System (TPMS) uses radio and sensor technology to check tire pressure levels. The TPMS sensors monitor the air pressure in your tires and transmit tire pressure readings to a receiver located in the vehicle.

Each tire, including the spare (if provided), should be checked monthly when cold and inflated to the inflation pressure recommended by the vehicle manufacturer on the vehicle placard or tire inflation pressure label. (If your vehicle has tires of a different size than the size indicated on the vehicle placard or tire inflation pressure label, you should determine the proper tire inflation pressure for those tires.)

As an added safety feature, your vehicle has been equipped with a tire pressure monitoring system (TPMS) that illuminates a low tire pressure telltale when one or more of your tires is significantly under-inflated.

Accordingly, when the low tire pressure telltale illuminates, you should stop and check your tires as soon as possible, and inflate them to the proper pressure. Driving on a significantly under-inflated tire causes the tire to overheat and can lead to tire failure. Under-inflation also reduces fuel efficiency and tire tread life, and may affect the vehicle's handling and stopping ability.

Please note that the TPMS is not a substitute for proper tire maintenance, and it is the driver's responsibility to maintain correct tire pressure, even if under-inflation has not reached the level to trigger illumination of the TPMS low tire pressure telltale.

Your vehicle has also been equipped with a TPMS malfunction indicator to indicate when the system is not operating properly. The TPMS malfunction indicator is combined with the low tire pressure telltale. When the system detects a malfunction, the telltale will flash for approximately one minute and then remain continuously illuminated. This sequence will continue upon subsequent vehicle start-ups as long as the malfunction exists.

When the malfunction indicator is illuminated, the system may not be able to detect or signal low tire pressure as intended. TPMS malfunctions may occur for a variety of reasons, including the installation of replacement or alternate tires or wheels on the vehicle that prevent the TPMS from functioning properly. Always check the TPMS malfunction telltale after replacing one or more tires or wheels on your vehicle to ensure that the replacement or alternate tires and wheels allow the TPMS to continue to function properly.

See *Tire Pressure Monitor Operation* ⇨ *372*.

Tire Pressure Monitor Operation

This vehicle may have a Tire Pressure Monitor System. The system is designed to warn the driver when a low tire pressure condition exists. Tire Pressure Monitor System sensors are mounted onto each tire and wheel assembly, excluding the spare tire and wheel assembly.

NOT FOR RESALE

The sensors monitor the air pressure in the tires and transmit the tire pressure readings to a receiver located in the vehicle.



Caution
Tire sealant materials are not all the same. A non-approved tire sealant could damage the TPMS sensors. TPMS sensor damage caused by using an incorrect tire sealant is not covered by the vehicle warranty. Always use only the GM approved tire sealant available through your dealer or included in the vehicle.

When a low tire pressure condition is detected, the system illuminates the low tire pressure warning light located on the instrument cluster. If the warning light comes on, stop as soon as possible and inflate the tires to the recommended pressure shown on the Tire and Loading Information label. See *Vehicle Load Limits* ⇨ *201*.

A message to check the pressure in a specific tire displays in the Driver Information Center. The low tire pressure warning light and the Driver Information Center warning message come on each time the vehicle is started until the tires are inflated to the correct inflation pressure. Use the Driver Information Center or infotainment screen to view the tire pressure levels. For additional information and details about the Driver Information Center operation and displays, see *Driver Information Center (DIC)* ⇨ *131* or *Vehicle Status* ⇨ *131*.

The low tire pressure warning light may come on in cool weather when the vehicle is first started, and then turn off as the vehicle is driven. This could be an early indicator that the air pressure is getting low and needs to be inflated to the proper pressure.

A Tire and Loading Information label shows the size of the original equipment tires and the correct inflation pressure for the tires when they are cold. See *Vehicle Load Limits* ⇨ *201* for an example of the Tire and Loading Information label and its location. Also see *Tire Pressure* ⇨ *370*.

The Tire Pressure Monitor System can warn about a low tire pressure condition, but it does not replace normal tire maintenance. See *Tire Inspection* ⇨ *376*, *Tire Rotation* ⇨ *376*, and *Tires* ⇨ *364*.

Tire Pressure Monitor System Malfunction Light and Message

The Tire Pressure Monitor System will not function properly if one or more of the system sensors are missing or inoperable. When the system detects a malfunction, the low tire pressure warning light flashes for about one minute and then stays on for the remainder of the time the vehicle is on. A Driver Information Center warning message also displays. The malfunction light and Driver Information Center warning message will come on each time the vehicle is started until the problem is corrected. Some of the conditions that can cause these to come on are:

NOT FOR RESALE

- One of the road tires has been replaced with the spare tire. The spare tire does not have a sensor. The malfunction light and the Driver Information Center message should go off after the road tire is replaced and the sensor matching process is performed successfully. See "Tire Pressure Monitor System Sensor Matching Process" later in this section.
- The sensor matching process was not done or not completed successfully after rotating the tires. The malfunction light and the Driver Information Center message should go off after successfully completing the sensor matching process. See "Tire Pressure Monitor System Sensor Matching Process" later in this section.
- One or more sensors are missing or damaged. The Driver Information Center message and the malfunction light should go off when the sensors are installed and the sensor matching process is performed successfully. See your dealer for service.
- Replacement tires or wheels do not match the original equipment tires or wheels. Tires and wheels other than those recommended could prevent the Tire Pressure Monitor System from functioning properly. See *Buying New Tires* ⇨ *378*.
- Operating electronic devices or being near facilities using radio wave frequencies similar to the Tire Pressure Monitor System could cause the sensors to malfunction.

If the system is not functioning properly, it cannot detect or signal a low tire pressure condition. See your dealer for service if the Tire Pressure Monitor System malfunction light and Driver Information Center message come on and stay on.

Tire Fill Alert

⚠ Warning

Overinflating a tire could cause the tire to rupture and you or others could be injured. Do not exceed the maximum pressure listed on the tire sidewall. See *Tire Sidewall Labeling* ⇨ *365* and *Vehicle Load Limits* ⇨ *201*.

If equipped, this feature provides visual and audible alerts outside the vehicle to help when inflating an underinflated tire to the recommended cold tire pressure.

When the low tire pressure warning light comes on:

1. Park the vehicle in a safe, level place.
2. Place the vehicle in P (Park).
3. Set the parking brake.
4. Add air to the tire that is underinflated.

   The turn signal light closest to the tire being inflated with start flashing. When the recommended pressure is reached, the horn sounds once and the turn signal light will stop flashing and turn solid for several seconds before turning off.

Repeat these steps for all underinflated tires that have illuminated the low tire pressure warning light.

If the tire is overinflated by more than 35 kPa (5 psi), the horn will sound multiple times and the turn signal light will continue to flash for several seconds after filling stops.

To release and correct the pressure, while the turn signal light is still flashing, briefly press the center of the valve stem. When the

NOT FOR RESALE

recommended pressure is reached, the horn sounds once and the turn signal light will stop flashing and turn solid for several seconds before turning off.

If the turn signal light does not flash within 15 seconds after starting to inflate the tire, the tire fill alert has not been activated or is not working.

If the hazard warning flashers are on, the tire fill alert visual feedback will not work properly.

The Tire Pressure Monitor System will not activate the tire fill alert properly under the following conditions:

- There is interference from an external device or transmitter.
- The air pressure from the inflation device is not sufficient to inflate the tire.
- There is a malfunction in the Tire Pressure Monitor System.
- There is a malfunction in the horn or turn signal lights.
- The sensor identification code is not registered to the system.
- The sensor battery is low.

If the tire fill alert does not operate due to system interference, move the vehicle about 1 m (3 ft) back or forward and try again. If the tire fill alert feature is not working, use a tire pressure gauge.

Tire Pressure Monitor System Sensor Matching Process – Auto Learn

Each sensor has a unique identification code. The identification code needs to be matched to a new tire/wheel position after rotating the tires or replacing one or more of the system sensors. If equipped with Auto Learn, when a tire is installed, the vehicle must be stationary for about 20 minutes before the system recalculates. The relearn process takes up to 10 minutes, driving at a minimum speed of 20 km/h (12 mph). A dash (-) or pressure value will display in the Driver Information Center. See *Driver Information Center (DIC)* ⇨ *131*. A warning message displays in the Driver Information Center if a problem occurs during the relearn process.

Tire Pressure Monitor System Sensor Matching Process – Manual Learn

Each sensor has a unique identification code. The identification code needs to be matched to a new tire/wheel position after rotating the vehicle's tires or replacing one or more of the system sensors. The sensor matching process should also be performed after replacing a spare tire with a road tire containing the Tire Pressure Monitor System sensor. After a successful matching process is completed, the malfunction light and the Driver Information Center message should turn off the next time the vehicle is started.

The sensors are matched to the tire/wheel positions, using a Tire Pressure Monitor System relearn tool, in the following order: driver side front tire, passenger side front tire, passenger side rear tire, and driver side rear tire. See your dealer for service or to purchase a relearn tool. You can also purchase a relearn tool at www.gmglobaltools.com, search on "TPMS Tool," or by calling 844-742-8471.

There are two minutes to match the first tire/wheel position, and five minutes overall to match all four tire/wheel positions. If it takes longer, the matching process stops and must be restarted.

NOT FOR RESALE

The sensor matching process is:

1. Place the vehicle in P (Park).
2. Set the parking brake.
3. Turn the vehicle on or place the vehicle in Service Mode. See *Ignition Positions* ⇨ *208*.
4. Select the Vehicle Status icon from the infotainment apps screen.
5. Choose "Tire Pressure" or "Tires," then choose "Relearn Sensors."

   The horn sounds twice to signal the receiver is in relearn mode and the TIRE LEARNING ACTIVE message displays on the Driver Information Center or Infotainment screen.
6. Start with the driver side front tire.
7. Place the relearn tool against the tire sidewall, near the valve stem. Then press the button on the tool to activate the sensor.

   The horn sounds once to confirm that the sensor identification code has been matched to this tire and wheel position.
8. Proceed to the passenger side front tire, and repeat the procedure in Step 7.
9. Proceed to the passenger side rear tire, and repeat the procedure in Step 7.
10. Proceed to the driver side rear tire, and repeat the procedure in Step 7.

    The horn sounds twice to indicate the sensor identification code has been matched to the driver side rear tire, and the sensor matching process is no longer active. The TIRE LEARNING ACTIVE message turns off.
11. Turn the vehicle off.
12. Set all four tires to the recommended air pressure level as indicated on the Tire and Loading Information label.

Tire Inspection

We recommend that the tires, including the spare tire, if the vehicle has one, be inspected for signs of wear or damage at least once a month.

Replace the tire if:

- The indicators at three or more places around the tire can be seen.
- There is cord or fabric showing through the tire's rubber.
- The tread or sidewall is cracked, cut, or snagged deep enough to show cord or fabric.
- The tire has a bump, bulge, or split.
- The tire has a puncture, cut, or other damage that cannot be repaired well because of the size or location of the damage.

Tire Rotation

Tires should be rotated according to the interval listed in the maintenance schedule. See *Maintenance Schedule* ⇨ *412*.

When rotating the tires, inspect the brake pads for signs of wear. See *Brakes* ⇨ *347*.

Tires are rotated to achieve a more uniform wear for all tires. The first rotation is the most important.

Anytime unusual wear is noticed, rotate the tires as soon as possible, check for proper tire inflation pressure, and check for damaged tires or wheels. If the unusual wear continues after the rotation, check

NOT FOR RESALE

the wheel alignment. See *When It Is Time for New Tires* ⇨ *377* and *Wheel Replacement* ⇨ *381*.

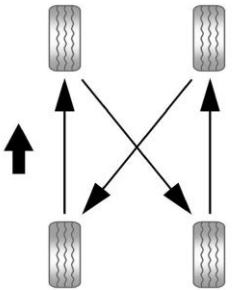

Use this rotation pattern when rotating the tires.

Do not include the spare tire in the tire rotation.

Adjust the front and rear tires to the recommended inflation pressure on the Tire and Loading Information label after the tires have been rotated. See *Tire Pressure* ⇨ *370* and *Vehicle Load Limits* ⇨ *201*.

Reset the Tire Pressure Monitor System. See *Tire Pressure Monitor Operation* ⇨ *372*.

⚠ Warning

Rust or dirt on a wheel, or on the parts to which it is fastened, can cause wheel nuts to become loose over time. The wheel could come off and cause a crash. When changing a wheel, remove any rust or dirt from places where the wheel attaches to the vehicle. In an emergency, a cloth or paper towel can be used; however, use a scraper or wire brush later to remove all rust or dirt.

⚠ Warning

Do not apply grease to the wheel mounting surface, wheel conical seats, or the wheel nuts or bolts. Grease applied to these areas could cause a wheel to become loose or come off, resulting in a crash.

Check that all wheel nuts are properly tightened. See "Wheel Nut Torque" under *Capacities and Specifications* ⇨ *420* and "Removing the Flat Tire and Installing the Spare Tire" under *Tire Changing* ⇨ *383*.

Lightly coat the inner diameter of the wheel hub opening with wheel bearing grease after a wheel change or tire rotation to prevent corrosion or rust build-up.

When It Is Time for New Tires

Factors, such as maintenance, temperatures, driving speeds, vehicle loading, and road conditions affect the wear rate of the tires.

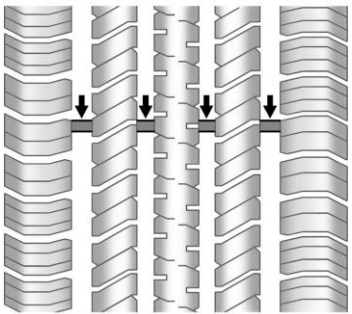

NOT FOR RESALE

Treadwear indicators are one way to tell when it is time for new tires. Treadwear indicators appear when the tires have only 1.6 mm (1/16 in) or less of tread remaining. See *Tire Inspection* ⇨ *376* and *Tire Rotation* ⇨ *376*.

The rubber in tires ages over time. This also applies to the spare tire, if the vehicle has one, even if it is never used. Multiple factors including temperatures, loading conditions, and inflation pressure maintenance affect how fast aging takes place. GM recommends that tires, including the spare if equipped, be replaced after six years, regardless of tread wear. To identify the age of a tire, use the tire manufacture date, which is the last four digits of the Department of Transportation (DOT) Tire Identification Number (TIN) molded into one side of the tire sidewall. The last four digits of the Tire Identification Number (TIN) indicate the tire manufactured date. The first two digits represent the week and the last two digits, the year. For example, the third week of the year 2020 would have a 4-digit Department of Transportation (DOT) date of 0320. Week 01 is the first full week (Sunday through Saturday) of each year.

Vehicle Storage

Tires age when stored normally mounted on a parked vehicle. Park a vehicle that will be stored for at least a month in a cool, dry, clean area away from direct sunlight to slow aging. This area should be free of grease, gasoline, or other substances that can deteriorate rubber.

Parking for an extended period can cause flat spots on the tires that may result in vibrations while driving. When storing a vehicle for at least a month, remove the tires or raise the vehicle to reduce the weight from the tires.

Buying New Tires

GM has developed and matched specific tires for the vehicle. The original equipment tires installed were designed to meet General Motors Tire Performance Criteria Specification (TPC Spec) system rating. When replacement tires are needed, GM strongly recommends buying tires with the same Tire Performance Criteria Specification (TPC Spec) rating.

GM's exclusive Tire Performance Criteria Specification (TPC Spec) system considers over a dozen critical specifications that impact the overall performance of the vehicle, including brake system performance, ride and handling, traction control, and tire pressure monitoring performance. GM's Tire Performance Criteria Specification (TPC Spec) number is molded onto the tire's sidewall near the tire size.

⚠ Warning

Tires could explode during improper service. Attempting to mount or dismount a tire could cause injury or death. Only your dealer or authorized tire service center should mount or dismount the tires.

⚠ Warning

Mixing tires of different sizes (other than those originally installed on the vehicle), brands, tread patterns, or types may cause loss of vehicle control,

(Continued)

NOT FOR RESALE

Warning (Continued)

resulting in a crash or other vehicle damage. Use the correct size, brand, and type of tire on all wheels.

⚠ Warning

Using bias-ply tires on the vehicle may cause the wheel rim flanges to develop cracks after many miles of driving. A tire and/or wheel could fail suddenly and cause a crash. Use only radial-ply tires with the wheels on the vehicle.

GM recommends replacing worn tires in complete sets of four. Uniform tread depth on all tires will help to maintain the performance of the vehicle. Braking and handling performance may be adversely affected if all the tires are not replaced at the same time. If proper rotation and maintenance have been done, all four tires should wear out at about the same time. However, if it is necessary to replace only one axle set of worn tires, place the new tires on the rear axle. See *Tire Rotation* ⇨ *376*.

If the vehicle tires must be replaced with a tire that does not have a Tire Performance Criteria Specification (TPC Spec) number, make sure they are the same size, load range, speed rating, and construction (radial) as the original tires.

Winter tires with the same speed rating as the original equipment tires may not be available for H, V, W, Y and ZR speed rated tires. Never exceed the winter tires' maximum speed capability when using winter tires with a lower speed rating.

The Tire and Loading Information label indicates the original equipment tires on the vehicle. See *Vehicle Load Limits* ⇨ *201*.

Different Size Tires and Wheels

⚠ Warning

If different sized wheels are used, there may not be an acceptable level of performance and safety if tires not recommended for those wheels are selected. This increases the chance of a crash and serious injury. Only use GM specific wheel and tire systems developed for the vehicle, and have them properly installed by a GM certified technician.

If wheels or tires are installed that are a different size than the original equipment wheels and tires, vehicle performance, including its braking, ride and handling characteristics, stability, and resistance to rollover may be affected. If the vehicle has electronic systems such as antilock brakes, rollover airbags, traction control, electronic stability control, or all-wheel drive, the performance of these systems can also be affected.

See *Buying New Tires* ⇨ *378* and *Accessories and Modifications* ⇨ *321*.

NOT FOR RESALE

Uniform Tire Quality Grading

The following information relates to the system developed by the United States National Highway Traffic Safety Administration (NHTSA), which grades tires by treadwear, traction, and temperature performance. This applies only to vehicles sold in the United States. The grades are molded on the sidewalls of most passenger car tires. The Uniform Tire Quality Grading (UTQG) system does not apply to deep tread, winter tires, compact spare tires, tires with nominal rim diameters of 10 to 12 inches (25 to 30 cm), or to some limited-production tires.

While the tires available on General Motors passenger cars and light trucks may vary with respect to these grades, they must also conform to federal safety requirements and additional General Motors Tire Performance Criteria (TPC) standards.

Quality grades can be found where applicable on the tire sidewall between tread shoulder and maximum section width. For example:

Treadwear 200 Traction AA Temperature A

All Passenger Car Tires Must Conform to Federal Safety Requirements In Addition To These Grades.

Treadwear

The treadwear grade is a comparative rating based on the wear rate of the tire when tested under controlled conditions on a specified government test course. For example, a tire graded 150 would wear one and one-half (1½) times as well on the government course as a tire graded 100. The relative performance of tires depends upon the actual conditions of their use, however, and may depart significantly from the norm due to variations in driving habits, service practices and differences in road characteristics and climate.

Traction

The traction grades, from highest to lowest, are AA, A, B, and C. Those grades represent the tire's ability to stop on wet pavement as measured under controlled conditions on specified government test surfaces of asphalt and concrete. A tire marked C may have poor traction performance. Warning: The traction grade assigned to this tire is based on straight-ahead braking traction tests, and does not include acceleration, cornering, hydroplaning, or peak traction characteristics.

Temperature

The temperature grades are A (the highest), B, and C, representing the tire's resistance to the generation of heat and its ability to dissipate heat when tested under controlled conditions on a specified indoor laboratory test wheel. Sustained high temperature can cause the material of the tire to degenerate and reduce tire life, and excessive temperature can lead to sudden tire failure. The grade

NOT FOR RESALE

C corresponds to a level of performance which all passenger car tires must meet under the Federal Motor Safety Standard No. 109. Grades B and A represent higher levels of performance on the laboratory test wheel than the minimum required by law. Warning: The temperature grade for this tire is established for a tire that is properly inflated and not overloaded. Excessive speed, underinflation, or excessive loading, either separately or in combination, can cause heat buildup and possible tire failure.

Wheel Alignment and Tire Balance

The tires and wheels were aligned and balanced at the factory to provide the longest tire life and best overall performance. Adjustments to wheel alignment and tire balancing are not necessary on a regular basis. Consider an alignment check if there is unusual tire wear or the vehicle is significantly pulling to one side or the other. Some slight pull to the left or right, depending on the slope of the road and/or other road surface variations such as troughs or ruts, is normal. If the vehicle is vibrating when driving on a smooth road, the tires and wheels may need to be rebalanced. See your dealer for proper diagnosis.

Wheel Replacement

Warning

Using the wrong replacement wheels, wheel bolts, or wheel nuts can be dangerous. It could affect the braking and handling of the vehicle. Tires can lose air and cause loss of control, resulting in a crash. Always use the correct wheel, wheel bolts, and wheel nuts for replacement.

Warning

Replacing a wheel with a used one is dangerous. How it has been used or how far it has been driven may be unknown. It could fail suddenly and cause a crash. When replacing wheels, use a new GM original equipment wheel.

Caution

The wrong wheel can also cause problems with bearing life, brake cooling, speedometer or odometer calibration, headlight aim, bumper height, vehicle ground clearance, and tire or tire chain clearance to the body and chassis.

Replace any wheel that is bent, cracked, or badly rusted or corroded. If wheel nuts keep coming loose, the wheel, wheel bolts, and wheel nuts should be replaced. If the wheel leaks air, replace it. Some aluminum wheels can be repaired. See your dealer if any of these conditions exist.

Your dealer will know the kind of wheel that is needed.

Each new wheel should have the same load-carrying capacity, diameter, width, offset, and be mounted the same way as the one it replaces.

Replace wheels, wheel bolts, wheel nuts, or Tire Pressure Monitor System sensors with new GM original equipment parts.

NOT FOR RESALE

Tire Chains and Other Traction Devices

Warning

Do not use tire chains if the vehicle has a tire size(s) listed below. There is not enough clearance. Tire chains used on a vehicle without the proper amount of clearance can cause damage to the brakes, suspension, or other vehicle parts. The area damaged by the tire chains could cause loss of control and a crash. Use another type of traction device only if its manufacturer recommends it for the vehicle's tire size combination and road conditions. Follow that manufacturer's instructions. To avoid vehicle damage, drive slow and readjust or remove the traction device if it contacts the vehicle. Do not spin the wheels. If traction devices are used, install them on the tires of the rear axle only.

- 275/60R20
- 275/65R20
- 275/50R22
- LT265/70R17
- LT285/70R18
- LT285/75R18

Caution

If your vehicle is equipped with the tire size(s) listed below, use SAE Class S chains, low profile chains that add no more than 12 mm (0.5 in) thickness to the tire tread and inner sidewall, or textile traction devices, such as snow socks. Use chains that are the proper size for the tires. Install them on the tires of the rear axle only. Tighten them as tightly as possible with the ends securely fastened. Drive slowly and follow the chain manufacturer's instructions. If the chains contact the vehicle, stop and retighten them. If the contact continues, slow down until it stops. Driving too fast or spinning the wheels with chains on will damage the vehicle.

- 255/70R17

If a Tire Goes Flat

Warning

Driving on a flat tire will cause permanent damage to the tire. Re-inflating a tire after it has been driven on while severely underinflated or flat may cause a blowout and a serious crash. Never attempt to re-inflate a tire that has been driven on while severely underinflated or flat. Have your dealer or an authorized tire service center repair or replace the flat tire as soon as possible.

It is unusual for a tire to blow out while driving, especially if the tires are maintained properly. It is much more likely for a tire to experience a slow leak. See *Tires* ⇨ *364*.

In the event of a blowout, follow these tips:

- A front tire blowout causes the vehicle to pull toward the side of the flat. Take your foot off the accelerator pedal and grip the steering wheel firmly. Steer to maintain lane position, and then gently brake to a stop.

NOT FOR RESALE

- A rear blowout, particularly on a curve, acts much like a skid and may require the same correction as used in a skid. Stop pressing the accelerator pedal and steer to straighten the vehicle. It may be very bumpy and noisy. Gently brake to a stop.

If a tire goes flat, avoid further tire and wheel damage by driving slowly to a level place, well off the road, if possible. Turn on the hazard warning flashers. See *Hazard Warning Flashers* ⇨ *143*.

⚠ Warning

Lifting a vehicle and getting under it to do maintenance or repairs is dangerous without the appropriate safety equipment and training. If a jack is provided with the vehicle, it is designed only for changing a flat tire. If it is used for anything else, you or others could be badly injured or killed if the vehicle slips off the jack. If a jack is provided with the vehicle, only use it for changing a flat tire.

If your vehicle is loaded at or near maximum cargo capacity, it may be difficult to fit the jack under the vehicle due to the environment (shoulder slope, road debris, etc.). Removal of some weight may improve the ability to fit the jack under the vehicle at the correct jacking location.

⚠ Warning

Changing a tire can be dangerous. The vehicle can slip off the jack and roll over or fall causing injury or death. Find a level place to change the tire. Do not attempt to change a tire on unlevel, off-road terrain. To help prevent the vehicle from moving:

1. Set the parking brake.
2. Shift the vehicle to P (Park).
3. For vehicles with four-wheel drive with an N (Neutral) transfer case position, be sure the transfer case is in a drive gear — not in N (Neutral).
4. Turn off the engine and do not restart while the vehicle is raised.
5. Do not allow passengers to remain in the vehicle.
6. Place wheel blocks, if equipped, on both sides of the tire at the opposite corner of the tire being changed.

To safely change a flat tire:

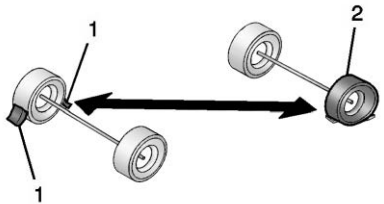

1. If equipped, place wheel blocks (1), as shown, to prevent the vehicle from moving.
2. Use the jacking equipment to change the flat tire (2). See *Tire Changing* ⇨ *383*.

Tire Changing

Performance Brake Package RPO 5JL

The original spare tire/wheel will not fit onto the front axle if equipped with the performance brake package RPO 5JL. If there is a flat tire on the front axle, a tire/wheel from the rear axle must be used to make the repair. The spare tire will then replace the tire/wheel that is removed from the rear axle.

NOT FOR RESALE

If equipped with the performance brake package RPO 5JL, and the flat tire is on the front axle, stop after performing all steps in Removing the Spare Tire and Tools and do the following. Otherwise, continue with the procedure:

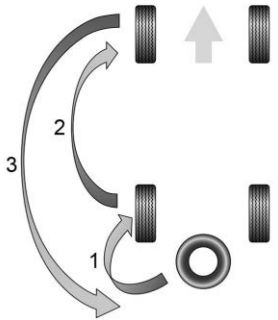

1. Remove the rear tire and replace it with the spare tire by performing all steps in Removing the Flat Tire and Installing the Spare Tire.
2. Perform all steps in Removing the Flat Tire and Installing the Spare Tire again this time replacing the flat front tire with the rear tire.
3. Proceed to Storing a Flat or Spare Tire and Tools.

Removing the Spare Tire and Tools

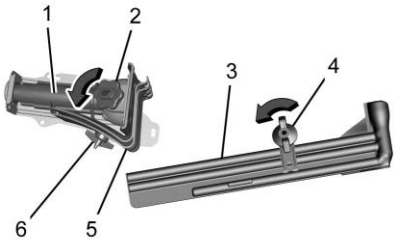

1. Jack
2. Jack Knob
3. Tool Kit
4. Wing Nut Retaining Tool Kit
5. Wheel Blocks
6. Wing Nut Retaining Wheel Blocks

The equipment is under the second row seats, if equipped, or behind the front row seats on regular cab models.

1. Turn the knob on the jack counterclockwise to lower the jack head to release the jack from its holder.
2. Turn the wing nut counterclockwise to remove the wheel blocks and the wheel block retainer.
3. Turn the wing nut used to retain the storage bag and tools counterclockwise to remove it.

Use the jack handle extensions and the wheel wrench to remove the underbody-mounted spare tire.

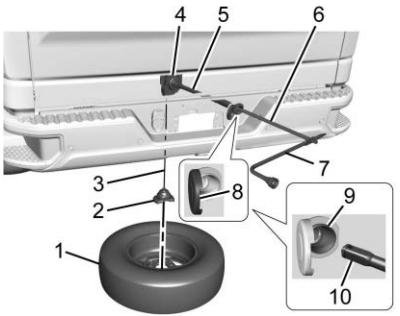

1. Spare Tire (Valve Stem Pointed Down)
2. Tire/Wheel Retainer

NOT FOR RESALE

3. Hoist Cable
4. Hoist Assembly
5. Hoist Shaft
6. Jack Handle Extensions
7. Wheel Wrench
8. Hoist Shaft Access Hole Cover
9. Hoist Shaft Access Hole
10. Hoist End of Extension Tool

1. Open the Hoist Shaft Access Hole Cover (8) on the rear bumper, and use the mechanical key to remove the spare tire lock.

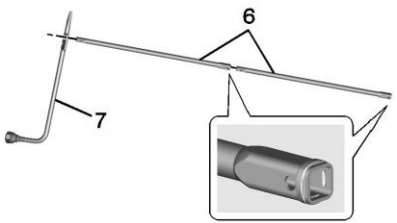

2. Assemble the wheel wrench (7) and the two jack handle extensions (6), as shown.

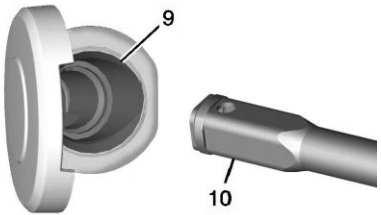

3. Insert the hoist end (open end) (10) of the extension through the Hoist Shaft Access Hole (9) in the rear bumper.

   Do not use the chiseled end of the wheel wrench.

   Be sure the hoist end of the extension (10) connects to the hoist shaft. The ribbed square end of the extension is used to lower the spare tire.

4. Turn the wheel wrench counterclockwise to lower the spare tire to the ground. Continue to turn the wheel wrench until the spare tire can be pulled out from under the vehicle.
5. Pull the spare tire out from under the vehicle.

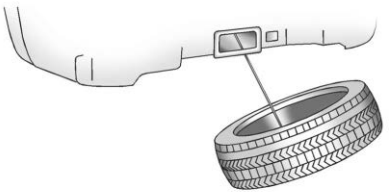

6. Tilt the tire toward the vehicle with some slack in the cable to access the tire/wheel retainer.



   Tilt the retainer and pull it through the center of the wheel along with the cable and spring.

7. Put the spare tire near the flat tire.

NOT FOR RESALE

Removing the Flat Tire and Installing the Spare Tire

Use the following pictures and instructions to remove the flat tire and raise the vehicle.

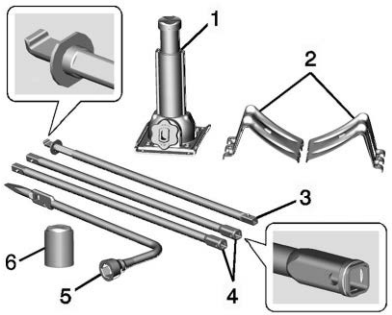

1. Jack
2. Wheel Blocks
3. Jack Handle
4. Jack Handle Extensions
5. Wheel Wrench
6. Jack Lift Head Adapter (If Equipped) (Use on Front Position Only)

The tools you will be using include the jack (1), wheel blocks (2), jack handle (3), jack handle extensions (4), wheel wrench (5), and jack lift head adapter (6) (if equipped).

1. Do a safety check before proceeding. See *If a Tire Goes Flat* ⇨ *382*.

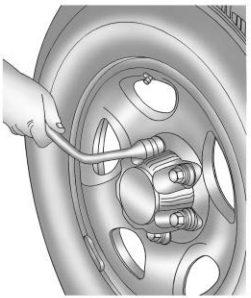

2. If the vehicle has wheel nut caps, loosen them by turning the wheel wrench counterclockwise.

   If the vehicle has a center cap with wheel nut caps, the wheel nut caps are designed to stay with the center cap after they are loosened. Remove the entire center cap.

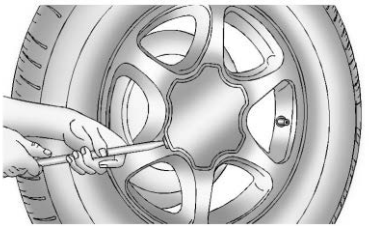

If the wheel has a smooth center cap, concealing access to the wheel nuts, place the chisel end of the wheel wrench in the slot on the wheel, and gently pry it out.

If the wheel's center cap does not conceal the wheel nuts, the center cap may remain during wheel removal. If the removed wheel is to be stowed in the hoist, the cap needs to be detached from the wheel. Access the wheel from the back side, and use a jack handle extension to push out the center cap.

NOT FOR RESALE

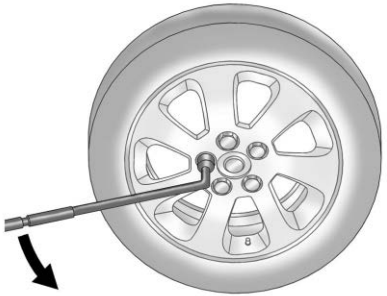

3. Use the wheel wrench and turn it counterclockwise to loosen the wheel nuts. Do not remove the wheel nuts yet.

⚠ Warning

To avoid personal injury and vehicle damage, disable the power assist steps before using a jack or placing an object under the vehicle. See *Power Assist Steps* ⇨ *32*.

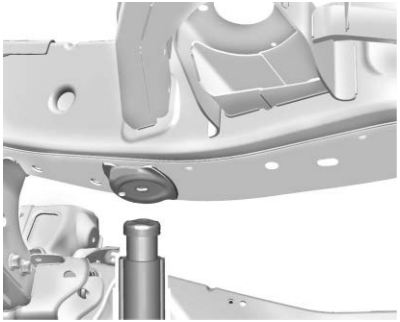

Front Position

4. If the flat tire is on the front of the vehicle, position the jack under the bracket attached to the vehicle's frame, behind the flat tire, as shown.

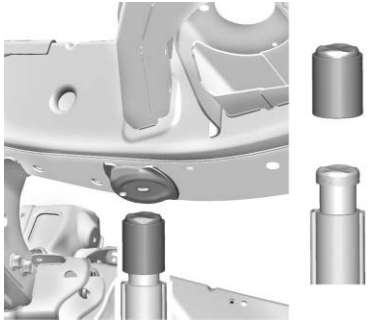

If the vehicle is equipped with a jack lift head adapter (6), fit the adapter over the end of the jack lift head. The adapter should have a snug fit. Check for proper fit between adapter and lift head, then position the jack under the bracket attached to the vehicle's frame, behind the flat tire, as shown.

NOT FOR RESALE

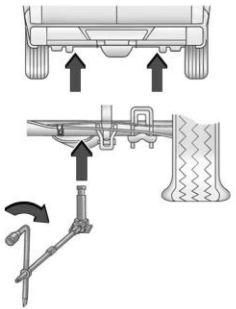

Rear Position

5. If the flat tire is on the rear, position the jack under the rear axle about 5 cm (2 in) inboard of the shock absorber bracket.

⚠ Warning

Getting under a vehicle when it is lifted on a jack is dangerous. If the vehicle slips off the jack, you could be badly injured or killed. Never get under a vehicle when it is supported only by a jack.

⚠ Warning

Raising the vehicle with the jack improperly positioned can damage the vehicle and even make the vehicle fall. To help avoid personal injury and vehicle damage, be sure to fit the jack lift head into the proper location before raising the vehicle.

⚠ Warning

The jack has a feature to limit its travel to prevent overextension. When the height limit is reached, an increase in resistance if felt when attempting to raise the jack farther. Raising the jack past the height limit can damage the jack pin and cause the jack to lock into an overextended position or not lower fully. Do not attempt to force the jack higher once the height limit is reached.

6. Turn the wheel wrench clockwise to raise the vehicle. Raise the vehicle far enough off the ground so there is enough room for the spare tire to fit under the wheel well.

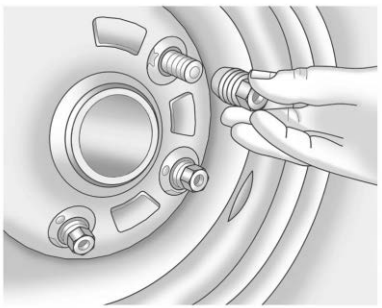

7. Remove all the wheel nuts and take off the flat tire.

⚠ Warning

Rust or dirt on a wheel, or on the parts to which it is fastened, can cause wheel nuts to become loose over time. The wheel could come off and cause a crash. When changing a wheel, remove any rust or dirt from places where the wheel attaches to the vehicle. In an emergency, a cloth or paper towel can be used; however, use a scraper or wire brush later to remove all rust or dirt.

NOT FOR RESALE

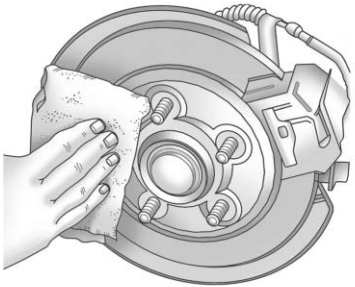

8. Remove any rust or dirt from the wheel bolts, mounting surfaces, and spare wheel.
9. Install the spare tire.

⚠ Warning

Never use oil or grease on bolts or nuts because the nuts might come loose. The vehicle's wheel could fall off, causing a crash.

10. Put the wheel nuts back on with the rounded end of the nuts toward the wheel.
11. Tighten each wheel nut by hand. Then use the wheel wrench to tighten the nuts until the wheel is held against the hub.
12. Turn the wheel wrench counterclockwise to lower the vehicle. Lower the jack completely.

⚠ Warning

If wheel studs are damaged, they can break. If all the studs on a wheel broke, the wheel could come off and cause a crash. If any stud is damaged because of a loose-running wheel, it could be that all of the studs are damaged. To be sure, replace all studs on the wheel. If the stud holes in a wheel have become larger, the wheel could collapse in operation. Replace any wheel if its stud holes have become larger or distorted in any way. Inspect hubs and hub-piloted wheels for damage. Because of loose running wheels, piloting pad damage may occur and require replacement of the entire hub, for proper centering of the wheels. When replacing studs, hubs, wheel nuts or wheels, be sure to use GM original equipment parts.

⚠ Warning

Wheel nuts that are improperly or incorrectly tightened can cause the wheels to become loose or come off. The wheel nuts should be tightened with a torque wrench to the proper torque specification after replacing. Follow the torque specification supplied by the aftermarket manufacturer when using accessory locking wheel nuts. See *Capacities and Specifications* ⇨ *420* for original equipment wheel nut torque specifications.

Caution

Improperly tightened wheel nuts can lead to brake pulsation and rotor damage. To avoid expensive brake repairs, evenly tighten the wheel nuts in the proper sequence and to the proper torque specification. See *Capacities and Specifications* ⇨ *420* for the wheel nut torque specification.

NOT FOR RESALE





13. Tighten the nuts firmly in a crisscross sequence, as shown, by turning the wheel wrench clockwise.

When reinstalling the regular wheel and tire, also reinstall either the center cap, or bolt-on hub cap, depending on what the vehicle is equipped with. For center caps, place the cap on the wheel and tap it into place until it seats flush with the wheel. The cap only goes on one way. Be sure to line up the tab on the center cap with the indentation on the wheel. For bolt-on hub caps, align the plastic nut caps with the wheel nuts and then tighten by hand. Then use the wheel wrench to tighten.

Storing a Flat or Spare Tire and Tools

⚠ Warning

Storing a jack, a tire, or other equipment in the passenger compartment of the vehicle could cause injury. In a sudden stop or collision, loose equipment could strike someone. Store all these in the proper place.

⚠ Warning

Failure to follow these tire storage instructions carefully could result in personal injury or property damage if the hoist cable fails or if the tire comes loose. Make sure the tire is stored securely before driving.

Caution

Storing an aluminum wheel with a flat tire under your vehicle for an extended period of time or with the valve stem pointing up can damage the wheel. Always stow the

(Continued)

Caution (Continued)

wheel with the valve stem pointing down and have the wheel/tire repaired as soon as possible.

Caution

The tire hoist can be damaged if there is no tension on the cable when using it. To have the necessary tension, the spare or road tire and wheel assembly must be installed on the tire hoist to use it.

⚠ Warning

An improperly stored spare tire could come loose and cause a crash. To avoid personal injury or property damage, always store the spare tire when the vehicle is parked on a level surface.

Store the tire under the rear of the vehicle in the spare tire carrier.

NOT FOR RESALE

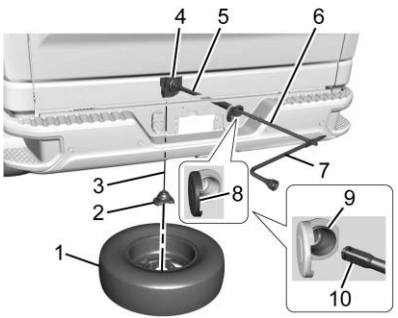

1. Spare Tire (Valve Stem Pointed Down)
2. Tire/Wheel Retainer
3. Hoist Cable
4. Hoist Assembly
5. Hoist Shaft
6. Jack Handle Extensions
7. Wheel Wrench
8. Hoist Shaft Access Hole Cover
9. Hoist Shaft Access Hole
10. Hoist End of Extension Tool

1. Put the tire on the ground at the rear of the vehicle with the valve stem pointed down, and to the rear.
2. Pull the cable and spring through the center of the wheel. Tilt the wheel retainer plate down and through the center wheel.

   Make sure the retainer is fully seated across the underside of the wheel.

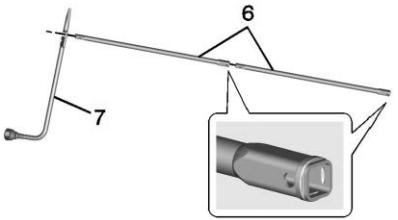

3. Attach the wheel wrench (7) and extensions (6) together, as shown.

Caution
Use of an air wrench or other power tools with the hoist mechanism is not recommended and could damage the system. Use only the tools supplied with the hoist mechanism.

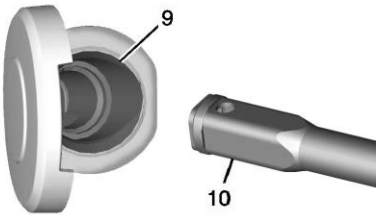

4. Insert the hoist end (10) through the Hoist Shaft Access Hole (9) in the rear bumper and onto the hoist shaft.

   Do not use the chiseled end of the wheel wrench.
5. Raise the tire part way upward. Make sure the retainer is seated in the wheel opening.
6. Raise the tire fully against the underside of the vehicle by turning the wheel wrench clockwise until you hear two clicks or feel it skip twice. You cannot overtighten the cable.

NOT FOR RESALE

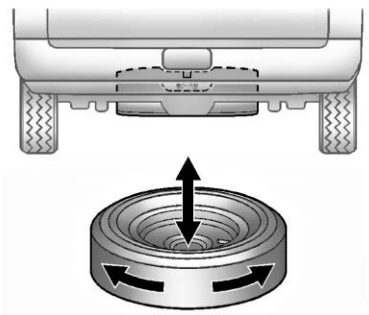

7. Make sure the tire is stored securely. Push, pull, and then try to turn the tire. If the tire moves, use the wheel wrench to tighten the cable.

   Repeat this tightness check procedure when checking the spare tire pressure according to the scheduled maintenance information or any time the spare tire is handled due to service of other components.



Correctly Stored



Incorrectly Stored

8. Reinstall the spare tire lock (if the vehicle has one), and close the Hoist Shaft Access Hole Cover (8).

Return the jack and tools to their original location in the vehicle. See “Removing the Spare Tire and Tools.”

Full-Size Spare Tire

If this vehicle came with a full-size spare tire, it was fully inflated when new, however, it can lose air over time. Check the inflation pressure regularly. See *Tire Pressure* ⇨ *370* and *Vehicle Load Limits* ⇨ *201* for information regarding proper tire inflation and loading the vehicle. For instructions on how to remove, install, or store a spare tire, see *Tire Changing* ⇨ *383*.

After installing the spare tire on the vehicle, stop as soon as possible and check that the spare is correctly inflated. The spare tire is made to perform well at speeds up to 112 km/h (70 MPH) at the recommended inflation pressure, so you can finish your trip.

Have the damaged or flat road tire repaired or replaced and installed back onto the vehicle as soon as possible so the spare tire will be available in case it is needed again. Do not

NOT FOR RESALE

mix tires and wheels of different sizes, because they will not fit. Keep the spare tire and its wheel together.

Caution

If the vehicle has four-wheel drive and a different size spare tire is installed, do not drive in four-wheel drive until the flat tire is repaired and/or replaced. The vehicle could be damaged and the repairs would not be covered by the warranty. Never use four-wheel drive when a different size spare tire is installed on the vehicle.

The vehicle may have a different size spare tire than the road tires originally installed on the vehicle. This spare tire was developed for use on this vehicle, so it is all right to drive on it. If the vehicle has four-wheel drive and a different size spare tire is installed, drive only in two-wheel drive.

If the vehicle has a spare tire that does not match the original road tires and wheels in size and type, do not include the spare in the tire rotation.

If equipped with a temporary use full-size spare tire, it is indicated on the tire sidewall. See *Tire Sidewall Labeling* ⇨ *365*. This spare tire should not be driven on over 112 km/h (70 mph), or 88 km/h (55 mph) when pulling a trailer, at the proper inflation pressure. Repair and replace the road tire as soon as it is convenient, and stow the spare tire for future use.

Jump Starting

Jump Starting - North America

⚠ Warning

Do not attempt to jump-start the battery if it is overheating, venting, emitting hissing sounds, smoking, or shows signs of damage such as swelling or a damaged case. The battery may cause burns and release hazardous gases. Keep away from the vehicle and contact your dealer.

For more information about the vehicle battery, see *Battery - North America* ⇨ *350*.

If the vehicle battery (or batteries) is dead, follow these steps to safely use another vehicle and jumper cables to start your vehicle.

⚠ Warning

WARNING: Battery posts, terminals and related accessories can expose you to chemicals including lead and lead compounds, which are known to the State of California to cause cancer and birth defects or other reproductive harm. Wash hands after handling. For more information go to www.P65Warnings.ca.gov.

See *California Proposition 65 Warning* ⇨ *1*.

⚠ Warning

Batteries can hurt you. They can be dangerous because:

- They contain acid that can burn you.
- They contain gas that can explode or ignite.
- They contain enough electricity to burn you.

If you do not follow these steps exactly, some or all of these things can hurt you.

NOT FOR RESALE

Caution

Ignoring these steps could result in costly damage to the vehicle that would not be covered by the vehicle warranty. Trying to start the vehicle by pushing or pulling it will not work, and it could damage the vehicle.

Caution

If the jumper cables are connected or removed in the wrong order, electrical shorting may occur and damage the vehicle. The repairs would not be covered by the vehicle warranty. Always connect and remove the jumper cables in the correct order, making sure that the cables do not touch each other or other metal.

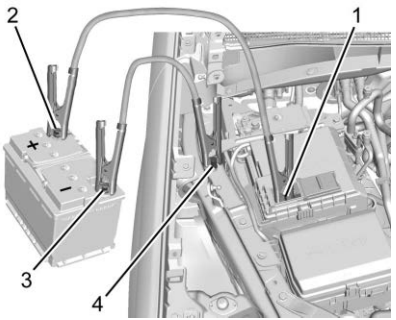

Connection Points and Sequence

1. Discharged Battery Positive (+) Terminal
2. Good Battery Positive (+) Terminal
3. Good Battery Negative (–) Terminal
4. Discharged Battery Negative (–) Grounding Point

The good battery positive (+) terminal and the good battery negative (–) terminal are on the battery of the vehicle providing the jump start.

The discharged battery positive (+) terminal and discharged battery negative (–) grounding point are on the passenger side of the vehicle.

The discharged battery positive (+) terminal is under a cover. Open the cover to expose the terminal.

Caution

If the other vehicle does not have a 12-volt system with a negative ground, both vehicles can be damaged. Only use a vehicle that has a 12-volt system with a negative ground for jump starting.

1. Check the other vehicle. It must have a 12-volt battery with a negative ground system.
2. If you have a vehicle with a diesel engine with two batteries, you should know before you begin that, especially in cold weather, you may not be able to get enough power from a single battery in another vehicle to start your diesel engine. If your vehicle has more than one battery, using the battery that is closer to the starter will reduce electrical resistance. This is located on the passenger side, in the rear of the engine compartment.

NOT FOR RESALE

3. Get the vehicles close enough so the jumper cables can reach, but be sure the vehicles are not touching each other. If they are, it could cause an unwanted ground connection. You would not be able to start your vehicle, and the bad grounding could damage the electrical systems.
4. To avoid the possibility of the vehicles rolling, set the parking brake firmly on both vehicles involved in the jump start procedure. Put the automatic transmission in P (Park) before setting the parking brake. If you have a four-wheel-drive vehicle, be sure the transfer case is in a drive gear, not in N (Neutral).

Caution

If any accessories are left on or plugged in during the jump starting procedure, they could be damaged. The repairs would not be covered by the vehicle warranty. Whenever possible, turn off or unplug all accessories on either vehicle when jump starting.

5. Turn the ignition off on both vehicles. Unplug unnecessary accessories plugged into the accessory power outlets. Turn off the radio and all the lights that are not needed. This will avoid sparks and help save both batteries and the radio.
6. Open the hood on the other vehicle and locate the positive (+) and negative (−) terminal locations on that vehicle.

⚠ Warning

An electric fan can start up even when the engine is not running and can injure you. Keep hands, clothing, and tools away from any underhood electric fan.

⚠ Warning

Using a match near a battery can cause battery gas to explode. People have been hurt doing this, and some have been blinded. Use a flashlight if you need more light.

Battery fluid contains acid that can burn you. Do not get it on you. If you accidentally get it in your eyes or on your skin, flush the place with water and get medical help immediately.

⚠ Warning

Fans or other moving engine parts can injure you badly. Keep your hands away from moving parts once the engine is running.

⚠ Warning

Always inspect jumper cables prior to use. Jumper cables with loose or missing insulation could shock you or cause vehicle damage. Do not use jumper cables that appear damaged.

7. Check that the jumper cables do not have loose or missing insulation.

   Before you connect the cables, here are some basic things you should know. Positive (+) will go to positive (+) or to a remote positive (+) terminal if the vehicle has one. Negative (−) will go to a heavy, unpainted metal engine part or to a remote negative (−) terminal if the vehicle has one.

   Do not connect positive (+) to negative (−) or you will get a short that would damage the battery and maybe other parts too. And

NOT FOR RESALE

do not connect the negative (−) cable to the negative (−) terminal on the dead battery because this can cause sparks.

8. Connect one end of the red positive (+) cable to the discharged battery positive (+) terminal.
9. Do not let the other end touch metal. Connect the other end of the positive (+) cable to the good battery positive (+) terminal. Use a remote positive (+) terminal if the vehicle has one.
10. Connect one end of the black negative (−) cable to the good battery negative (−) terminal. Use a remote negative (−) terminal if the vehicle has one.

    Do not let the other end touch anything until the next step.
11. Connect the other end of the negative (−) cable to the discharged battery negative (−) grounding point.
12. Start the vehicle with the good battery and run the engine for a while.
13. Try to start the vehicle that had the dead battery. If it will not start after a few tries, it probably needs service.

Jumper Cable Removal

To remove the jumper cables, reverse Steps 8–11 in exact order.

After starting the disabled vehicle and removing the jumper cables, allow it to idle for several minutes.

Towing the Vehicle

Transporting a Disabled Vehicle

Caution

Incorrectly transporting a disabled vehicle may cause damage to the vehicle. Use proper tire straps to secure the vehicle to the flatbed tow truck. Do not strap or hook to any frame, underbody, or suspension component not specified below. Do not move vehicles with drive axle tires on the ground. Damage is not covered by the vehicle warranty.

Caution

The vehicle may be equipped with an Electric Parking Brake (EPB) and/or an electronic shifter. In the event of a loss of 12-volt battery power, the EPB cannot be released, and the vehicle cannot be shifted to N (Neutral). Tire skates or dollies must be used under the non-rolling tires to prevent damage while loading/unloading the vehicle. Dragging the vehicle will cause damage not covered by the vehicle warranty.

Contact a professional towing service to transport a disabled vehicle. GM recommends a flatbed tow truck to transport a disabled vehicle. Use ramps to help reduce approach angles, if necessary.

The vehicle must be in N (Neutral) and the electric parking brake must be released when loading the vehicle onto a flatbed tow truck.

- If the vehicle is equipped with car wash mode and has 12-volt battery power, See “Car Wash Mode” under *Automatic Transmission* ⇨ *222* to place the vehicle in N (Neutral).

NOT FOR RESALE

- If the 12-volt battery is dead and/or the engine will not start, the vehicle will not move. Try to jump start the vehicle. See *Jump Starting - North America* ⇨ *393* and if the jump start is successful, retry the "Car Wash Mode" procedure.

Front Attachment Points

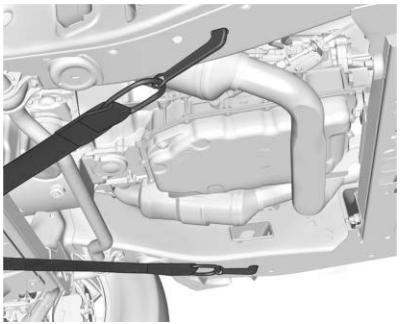

The vehicle is equipped with specific attachment points to be used to pull the vehicle onto a flatbed car carrier from a flat road surface. Do not use these attachment points to pull the vehicle from snow, mud, sand, or a ditch.

Recreational Vehicle Towing

⚠ Warning

Never attempt to tow a vehicle with the battery connected. Follow every step in this section to avoid unintended responses from steering, braking, suspension, or other vehicle systems.

Recreational vehicle towing means towing the vehicle behind another vehicle, such as a motor home. The two most common types of recreational vehicle towing are dinghy and dolly towing. Dinghy towing is towing the vehicle with all four wheels on the ground. Dolly towing is towing the vehicle with two wheels on the ground and two wheels on a dolly.

Here are some important things to consider before recreational vehicle towing:

- Before towing the vehicle, become familiar with the local laws that apply to recreational vehicle towing. These laws may vary by region.
- The towing capacity of the towing vehicle. Read the tow vehicle manufacturer's recommendations.
- How far the vehicle can be towed. Some vehicles have restrictions on how far and how long the vehicle can be towed.
- Whether the vehicle has the proper towing equipment. See your dealer or trailering professional for additional advice and equipment recommendations.
- Whether the vehicle is ready to be towed. Just as preparing the vehicle for a long trip, make sure the vehicle is prepared to be towed.

Follow the tow vehicle manufacturer's instructions. See your dealer or trailering professional for additional advice and equipment recommendations.

Caution

Use of a shield mounted in front of the vehicle grille could restrict airflow and cause damage to the transmission. The repairs would not be covered by the vehicle warranty. If using a shield, only use one that attaches to the towing vehicle.

NOT FOR RESALE

Caution

Do not install tow hardware that interferes with the lower shutters. Shutters cannot be removed. Removal of the shutters can cause damage to the engine that will not be covered by the vehicle warranty. If using tow hardware, only install hardware that does not require the removal of the shutters.

Dinghy Towing (Two-Wheel-Drive Vehicles and Vehicles with a Single-Speed Transfer Case)

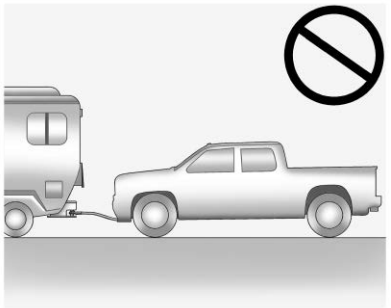

Caution

If a vehicle with two-wheel drive or a single-speed transfer case is towed with all four wheels on the ground, the drivetrain components could be damaged. The repairs would not be covered by the vehicle warranty.

Two-wheel-drive vehicles and vehicles with a single-speed transfer case should not be towed with all four wheels on the ground.

Dinghy Towing (Vehicles with a Two-Speed Transfer Case)

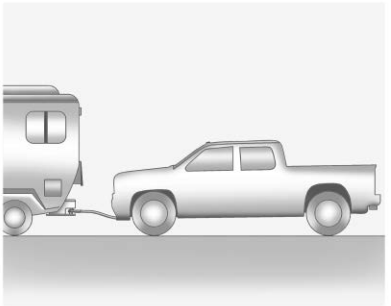

Only dinghy tow four-wheel-drive vehicles with a two-speed transfer case that have an N (Neutral) and a 4↓ (Four-Wheel Drive Low) setting.

⚠ Warning

Shifting a four-wheel-drive vehicle's transfer case into N (Neutral) can allow the vehicle to move even if the transmission is in P (Park). You or others could be injured. Set the parking brake and use wheel blocks before shifting the transfer case to N (Neutral).

To dinghy tow:

1. Position the vehicle being towed behind the tow vehicle, facing forward and on a level surface.
2. Securely attach the vehicle being towed to the tow vehicle.
3. Apply the parking brake and start the engine.
4. Shift the transfer case to N (Neutral). See “Shifting into N (Neutral)” under *Four-Wheel Drive* ⇨ *226*.

NOT FOR RESALE

5. With the engine running, release the parking brake and verify that the transfer case is in N (Neutral) by shifting the transmission to D (Drive) and then to R (Reverse). There should be no movement while shifting the transmission.
6. Shift the transmission to P (Park).
7. Release the parking brake.
8. Turn the vehicle off.
9. Turn on the ignition without starting the engine. To do this, take your foot off the brake pedal then press and hold ENGINE START/STOP for five seconds until the green light on the button is illuminated. See *Ignition Positions* ⇨ *208*.

⚠ Warning

To avoid death, serious injury, or property damage, before dinghy towing the vehicle, always disconnect and secure the negative battery cable and cover the negative battery post and cable with a non-conductive material. If the battery is left connected or the battery cable contacts

(Continued)

Warning (Continued)

the post, the Electric Parking Brake may activate during towing, which could cause a crash.

10. Disconnect the negative (–) battery cable. See "Negative Battery Cable Disconnection" in *Battery - North America* ⇨ *350*.

Caution

If the steering column is locked, vehicle damage may occur.

11. Move the steering wheel to make sure the steering column is unlocked.
12. For column shift transmissions, verify the transmission is in P (Park). Failing to put the transmission into Park before flat towing can damage the transmission.
13. Keep the remote key outside of the vehicle and manually lock the doors. Access the vehicle by using the key in the door lock. See *Door Locks* ⇨ *20*.

Disconnecting the Towed Vehicle

Before disconnecting from the tow vehicle:

1. Park on a level surface. Secure the vehicle with wheel blocks.
2. Re-connect the negative (–) battery. See *Battery - North America* ⇨ *350*.
3. Turn on the ignition without starting the engine. With your foot off the brake pedal, press and hold ENGINE START/STOP for five seconds until the green light comes on the button is illuminated. See *Ignition Positions* ⇨ *208*.
4. Set the parking brake. See *Electric Parking Brake* ⇨ *229*.
5. Disconnect from the tow vehicle.
6. Start the engine.
7. Shift the transmission to N (Neutral).
8. Shift the transfer case to 2↑ (Two-Wheel Drive High). When the shift to 2↑ (Two-Wheel Drive High) is complete, the light in the instrument cluster will stop flashing and stay lit. See *Four-Wheel-Drive Light* ⇨ *123*.

NOT FOR RESALE

9. Check that the vehicle is in 2↑ (Two-Wheel Drive High) by starting the engine and shifting the transmission to D (Drive) and then to R (Reverse). There should be movement of the vehicle while shifting.
10. Shift the transmission to P (Park) and turn off the ignition.
11. Release the parking brake and remove the wheel blocks.
12. Reset any lost presets.

    The outside temperature display will default to 0 °C (32 °F) but will reset with normal usage.

Dolly Towing

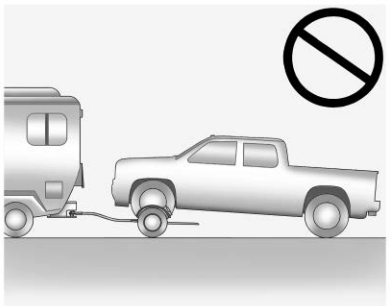

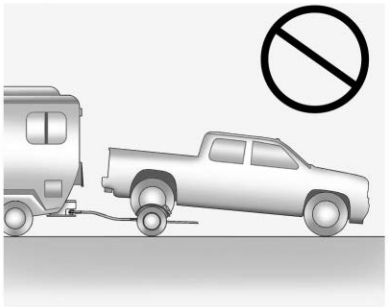

Caution
Do not tow this vehicle with two wheels on the ground, or vehicle damage could occur. This damage would not be covered by the vehicle warranty.

Dolly towing this vehicle is not allowed with either the front or the rear tires on the ground for two-wheel drive or four-wheel drive, regardless of transfer case.

Appearance Care

Exterior Care

Locks

Locks are lubricated at the factory. Only use a de-icing agent when absolutely necessary, and have the locks greased after using the de-icing agent. See *Recommended Fluids and Lubricants* ⇨ *416*.

Washing the Vehicle

⚠ Warning
Do not power wash any part of the vehicle's interior, including the vinyl floor covering. This could damage safety and other systems in the vehicle, which would not be covered by the vehicle warranty.

Caution
Do not use petroleum-based, acidic, or abrasive cleaning agents as they can damage the vehicle's paint, metal,
(Continued)

NOT FOR RESALE

Caution (Continued)

or plastic parts. If damage occurs, it would not be covered by the vehicle warranty. Approved cleaning products can be obtained from your dealer. Follow all manufacturer directions regarding correct product usage, necessary safety precautions, and appropriate disposal of any vehicle care product.

To preserve the exterior finish, wash it often and out of direct sunlight.

Take care to wash materials such as calcium chloride and other salts, ice melting agents, road oil and tar, tree sap, bird droppings, chemicals from industrial chimneys, etc. from the finish as soon as possible. These materials can damage the finish if they remain on painted surfaces.

Automatic Car Wash

Caution

Some automatic car washes can cause damage to the vehicle, wheels, and ground effects. Some automatic car washes are not recommended, due to lack of clearance for the undercarriage and/or wide rear tires and wheels. Ensure the automatic car wash width is large enough for your vehicle.

When using an automatic car wash, follow the posted instructions carefully.

Before entering the wash:

- Close all windows and sunroof, if equipped.
- Turn off the windshield wipers and rear window wipers, if equipped.
- Remove any accessories that can be damaged or interfere with car wash equipment.
- Close the fuel door.

During the wash:

- If using an automatic car wash with a conveyor system, drive onto the conveyor system, then put the vehicle in N (Neutral).

Hand Wash

Thoroughly rinse all cleaning agents before and after hand washing. Agents left to dry on the exterior may stain the finish.

Dry the exterior finish with a soft, clean chamois or an all-cotton towel to avoid surface scratches and water spotting.

Cleaning Underhood Components

Caution

Do not power wash any component under the hood that has this  symbol.

This could cause damage that would not be covered by the vehicle warranty.

Only use water when cleaning underhood components. Solvents and aggressive cleaners can be harmful.

Caution

Avoid using high-pressure washers closer than 30 cm (12 in) to the surface of the vehicle. Use of power washers exceeding 8,274 kPa (1,200 psi) can result in damage or removal of paint and decals.

NOT FOR RESALE

If you choose to use a power washer, use care when handling and follow these criteria:

- Keep water pressure below 8,000 kPa (1,160 PSI).
- Keep water temperature below 80 °C (180 °F).
- Use a spray nozzle with a 40-degree-wide or greater angle spray pattern.
- Keep the nozzle at least 30 cm (12 in) away from all surfaces.

Only use water when cleaning underhood components. Solvents and aggressive cleaners can be harmful.

Finish Care

Caution

Do not apply waxes or polishes to uncoated plastic, vinyl, rubber, decals, simulated wood, flat paint, or metal mesh grilles as damage can occur.

Caution

Machine compounding or aggressive polishing on a basecoat/clearcoat paint finish may damage it. Use only non-abrasive waxes and polishes that are made for a basecoat/clearcoat paint finish on the vehicle.

Performing occasional hand waxing or mild polishing removes residue from the paint finish. Do not apply aftermarket clearcoat sealant/wax. See your dealer for approved cleaning products.

Avoid rubbing the finish vigorously. This can create bright spots and an uneven appearance on the finish.

Airborne pollutants can cause blotchy, ring-shaped discolorations, and small, irregular dark spots etched into the paint surface. If painted surfaces are damaged, see your dealer to have the damage assessed and repaired.

To keep paint finish looking new, keep the vehicle garaged or covered whenever possible.

Protecting Exterior Bright Metal Moldings

Caution

Failure to clean and protect the bright metal moldings can result in a hazy white finish or pitting. This damage would not be covered by the vehicle warranty.

The bright metal moldings on the vehicle are made of aluminum, chrome, or stainless steel. To prevent damage, always follow these cleaning instructions:

- Be sure the molding is cool to the touch before applying any cleaning solution.
- Use only approved cleaning solutions for aluminum, chrome, or stainless steel. Some cleaners are highly acidic or contain alkaline substances and can damage the moldings.
- Always dilute a concentrated cleaner according to the manufacturer's instructions.
- Do not use cleaners that are not intended for automotive use.
- Use a nonabrasive wax on the vehicle after washing to protect and extend the molding finish.

NOT FOR RESALE

Spray-In Bedliner Care

Caution
Using silicone-based products may damage the bedliner, reduce the slip-resistant texture, and attract dirt.

A spray-in bedliner is a permanent coating that bonds to the truck bed and cannot be removed. Promptly rinse the bedliner surface following a chemical spill to avoid permanent damage.

Spray-in bedliners can fade from oxidation, road dirt, heavy-duty hauling, and hard water stains. Clean it periodically by washing off the loose dirt and using a mild detergent. To restore the original appearance, apply the bedliner conditioner available through your dealer.

Cleaning Exterior Lights/Lenses, Emblems, Decals, and Stripes

Caution
Failure to clean lights properly can cause damage to the light cover that would not be covered by the vehicle warranty.

Caution
Using wax on low gloss black finish stripes can increase the gloss level and create a non-uniform finish. Clean low gloss stripes with soap and water only.

Use lukewarm or cold water, a soft cloth, and a car washing soap to clean exterior lights, lenses, emblems, decals, and stripes. Follow the instructions under "Washing the Vehicle" previously in this section.

Light covers are made of plastic and may have a UV protective coating. Do not clean or wipe them while they are dry. This can cause scratches to the surface of the light cover.

Do not use any of the following on light covers:

- Abrasive or caustic agents.
- Washer fluids and other cleaning agents in higher concentrations than suggested by the manufacturer.
- Solvents, alcohols, fuels, or other harsh cleaners.
- Ice scrapers or other hard items.
- Aftermarket appearance caps or covers while the lights are illuminated. Excessive heat may be generated and can damage the covers.

Air Intakes

Clear debris from the air intakes between the hood and windshield when washing the vehicle.

Shutter System

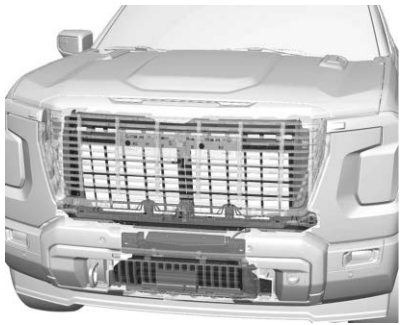

This vehicle may have a shutter system that automatically closes the frontal cooling opening. This system is designed to help improve fuel economy. If the shutter system is blocked, the Malfunction Indicator Light

NOT FOR RESALE

may turn on. Ensure the shutter system is clear of any visible debris, snow, or ice. If the Malfunction Indicator Light stays on after cleaning the shutter system, see *Malfunction Indicator Light (Gasoline Check Engine Light)* ⇨ *119 Malfunction Indicator Light (Diesel Check Engine Light)* ⇨ *121*.

Windshield and Wiper Blades

Clean the outside of the windshield with glass cleaner.

Clean rubber wiper blades using a lint-free cloth or paper towel soaked with windshield washer fluid or a mild detergent. Wash the windshield thoroughly when cleaning the blades. Bugs, road grime, sap, and a buildup of vehicle wash/wax treatments may cause wiper streaking.

Extreme dusty conditions, sand, salt, heat, sun, snow, and ice can cause damage. Replace the wiper blades when they are worn or damaged.

Weatherstrips

Apply weatherstrip lubricant once a year to help weatherstrips last longer, seal better, and not stick or squeak. Hot, dry climates may require more frequent application.

Use a clean cloth to remove any black marks caused by weatherstrips.

Tires, Wheels, and Wheel Trim

Caution

Using petroleum-based tire dressing products on the vehicle may damage the paint finish and/or tires. When applying a tire dressing, always wipe off any overspray from all painted surfaces on the vehicle.

Use a stiff brush with tire cleaner to clean the tires.

Caution

To avoid surface damage on wheels and wheel trim, do not use strong soaps, chemicals, abrasive polishes, cleaners, or brushes. Use only GM approved cleaners. Do not drive the vehicle through an automatic car wash that uses silicon carbide tire/wheel cleaning brushes. Damage could occur and the repairs would not be covered by the vehicle warranty.

Use a soft, clean cloth with mild soap and water to clean the wheels. After rinsing thoroughly with clean water, dry with a soft, clean towel. Wax as desired.

Body Component Lubrication

Lubricate all key lock cylinders, hood hinges, tailgate hinges, and the steel fuel door hinge unless the components are plastic. See *Recommended Fluids and Lubricants* ⇨ *416*.

Underbody Maintenance

Caution

For electric or hybrid vehicles, perform regular care around the high voltage system. Do not direct high pressure spray at or around connectors, cables, or any of the vents. High pressure can damage the seals and battery components.

Every six months, flush any corrosive materials from the underbody with plain water. Take care to thoroughly clean any areas where mud and other debris can collect. If equipped, extend power assist steps and use a high pressure wash to clean all joints and gaps.

NOT FOR RESALE

Do not directly power wash the transfer case and/or front/rear axle output seals. High pressure water get into the seals and contaminate the fluid. Contaminated fluid decreases the life of the transfer case and/or axles and should be replaced.

Sheet Metal Damage

If the vehicle is damaged and requires sheet metal repair or replacement, use original manufacturer replacement parts which provide corrosion protection and maintain the vehicle warranty.

If original manufacturer replacement parts are not used, make sure the body repair shop applies anti-corrosion material to parts repaired or replaced.

Finish Damage

Quickly repair minor chips and scratches with touch-up materials available from your dealer to avoid corrosion. See your dealer's body and paint shop to correct larger areas of finish damage.

Interior Care

To prevent dirt particle abrasions to the interior, regularly clean it. Before using cleaners, read and follow all safety instructions on the label. While cleaning the interior, open the doors and windows for proper ventilation. Newspapers or dark garments can transfer color to the interior.

Caution

Immediately remove cleaners, hand lotions, sunscreen, and insect repellent from all interior surfaces or permanent damage may result.

Caution

Use cleaners specifically designed for the surfaces being cleaned to prevent permanent damage to the vehicle. Apply all cleaners directly to a cleaning cloth. Do not spray cleaners on any switches or controls.

When using liquid soap cleaners, follow the directions on the specific cleaner or soap solution for dilution instructions.

Caution

To prevent damage:

- Never use a razor or any other sharp object to remove soil from any interior surface.
- Never use a brush with stiff bristles.
- Never rub any surface aggressively or with too much pressure.
- Do not power wash any part of the interior or allow any electrical components or wiring to get wet. Interior surfaces may contain components or wiring that are not visible.
- Do not use laundry detergents or dishwashing soaps with degreasers. Do not use solutions that contain strong or caustic soap.
- Do not heavily saturate the upholstery when cleaning.
- Do not use solvents or cleaners containing solvents.

(Continued)

NOT FOR RESALE

Caution (Continued)

- Do not use disinfecting wipes that are scented or contain bleach. Do not use wipes or cleaners that show a color transfer to the wipe or change the appearance of the interior surface when used.
- Do not use scented or gel-type hand sanitizers. If hand sanitizer comes in contact with interior surfaces of the vehicle, blot immediately and clean with a soft cloth dampened with a mild soap and water solution.

Interior Glass

Caution

To prevent scratching, never use abrasive cleaners on automotive glass. Abrasive cleaners or aggressive cleaning may damage the rear window defogger.

Use a microfiber cloth fabric dampened with water to clean interior glass. Wipe droplets left behind with a clean dry cloth. If necessary, use a commercial glass cleaner after cleaning with plain water.

Cleaning the interior windshield with water during the first three to six months of ownership will reduce tendency to fog.

Head-Up Display (HUD)

Clean the inside of the windshield to remove any dirt or film that could reduce the sharpness or clarity of the Head-Up Display (HUD) image.

Clean the Head-Up Display (HUD) lens with a soft cloth sprayed with glass cleaner. Wipe the lens gently, then dry it. See *Head-Up Display (HUD)* ⇨ *134*.

Speaker Covers

Vacuum gently around speaker covers to prevent damage. Clean spots with water and mild soap.

Coated Moldings

When cleaning coated moldings:

- When lightly soiled, wipe with a sponge or soft, lint-free cloth dampened with water.
- When heavily soiled, use warm soapy water.

Vinyl/Rubber Floor and Mats

⚠ Warning

Do not use cleaners that contain silicone, wax-based products, or cleaners that increase gloss on vinyl/rubber floor and mats. These cleaners can permanently change the appearance and feel of the vinyl/rubber and can make the floor slippery. Your foot could slip while operating the vehicle, and you could lose control, resulting in a crash. You or others could be injured.

If equipped with vinyl/rubber floor and mats, use a soft cloth and/or brush dampened with water to remove dust and loose dirt. For more thorough cleaning, use a mild soap and water solution.

NOT FOR RESALE

Fabric/Carpet/Suede

Before cleaning, remove as much solid soils as possible, then gently vacuum the surface using a soft brush attachment. If a rotating vacuum brush attachment is used, only use it on the floor carpet.

Gently blot liquids with a paper towel. Continue blotting until no more soil can be removed.

To clean:

1. Saturate a clean, lint-free colorfast cloth with water. Microfiber cloth is recommended to prevent lint transfer to the fabric or carpet.
2. Remove excess moisture by gently wringing until water does not drip from the cleaning cloth.
3. Start on the outside edge of the soil and gently rub toward the center. Fold the cleaning cloth to a clean area frequently to prevent forcing the soil into the fabric.
4. Continue gently rubbing the soiled area until there is no longer any color transfer from the soil to the cleaning cloth.
5. If the soil is not completely removed, use a mild soap solution followed only by plain water.
6. After cleaning, use a paper towel to blot excess moisture.

Stubborn stains may require a commercial upholstery cleaner or spot lifter. Test a small hidden area for colorfastness before using a commercial upholstery cleaner or spot lifter. If ring formation occurs, clean the entire fabric or carpet.

Cleaning High Gloss Surfaces, Vehicle Information, and Radio Displays

Caution
Do not attach a device with a suction cup to the display. This may cause damage and would not be covered by the vehicle warranty.

1. Use a soft bristle brush to remove any dirt from the high gloss surface/display.
2. Gently clean the surface/display with a clean microfiber cloth that has not been bleached or washed with fabric softener. Never use window cleaners or solvents. Rinse the microfiber cloth thoroughly and air dry before next use.

Instrument Panel, Leather, Vinyl, Plastic Surfaces, Low Gloss Paint Surfaces, and Natural Open Pore Wood Surfaces

Caution
Soaking or saturating leather, especially perforated leather, as well as other interior surfaces, may cause permanent damage. Wipe excess moisture from these surfaces after cleaning and allow them to dry naturally. Never use heat, steam, or spot removers. Do not use liquids that contain alcohol or solvents on leather seats. Do not use cleaners that contain silicone or wax-based products. Cleaners containing these solvents can permanently change the appearance and feel of leather or soft trim and are not recommended.

NOT FOR RESALE

Caution

Use of air fresheners may cause permanent damage to plastics and painted surfaces. If an air freshener comes in contact with any plastic or painted surface in the vehicle, blot immediately and clean with a soft cloth dampened with a mild soap solution. Damage caused by air fresheners would not be covered by the vehicle warranty.

Use compressed air or a vacuum to remove liquid or dust under the Multi-Functional Controller cap, if equipped.

To remove dust and dirt from knobs and crevices on the instrument cluster:

1. Use a soft bristle brush.
2. Wipe with a soft microfiber cloth dampened with water. Use a mild soap and water solution for more thorough cleaning.

Do not use cleaners that increase gloss, especially on the instrument panel. Reflected glare can decrease visibility through the windshield under certain conditions.

Chrome Decorative Surfaces

Use a microfiber cloth dampened with water to clean chrome decorative surfaces, then wipe dry with a clean cloth. If necessary, apply a commercial glass cleaner to a dry microfiber cloth to remove fingerprints, then wipe the surface dry with a clean cloth to help reduce streaking.

Cargo Cover and Convenience Net

If equipped, wash with warm water and mild detergent. Do not use chlorine bleach. Rinse with cold water, and then dry completely.

Care of Seat Belts

⚠ Warning

Do not bleach or dye seat belt webbing. It may severely weaken the webbing. In a crash, they might not be able to provide adequate protection. Clean and rinse seat belt webbing only with mild soap and lukewarm water. Allow the webbing to dry.

Keep belts clean and dry.

Floor Mats

⚠ Warning

If a floor mat is the wrong size or is not properly installed, it can interfere with the pedals. Interference with the pedals can cause unintended acceleration and/or increased stopping distance which can cause a crash and injury. Make sure the floor mat does not interfere with the pedals.

Proper Use:

- Use only GM-certified floor mats.
- Do not use a floor mat if the vehicle is not equipped with a floor mat retainer on the driver side floor.
- Use the floor mat with the correct side up. Do not turn it over.
- Do not place anything on top of the driver side floor mat.
- Use only a single floor mat on the driver side.

NOT FOR RESALE

The original equipment floor mats are specially designed for your vehicle. If the floor mats need replacing, see “Removing and Replacing the Floor Mats” later in this section.

Removing and Replacing the Floor Mats

The driver side floor mat is held in place by two button-type carpet retainers.



1. Pull up on the rear of the floor mat to unlock each retainer and remove.
2. Reinstall by lining up the floor mat retainer openings over the button-type carpet retainers and snapping them into position.
3. Make sure the floor mat is properly secured in place. Verify the floor mat does not interfere with the pedals.

Removing and Replacing the Floor Liner Inserts, If Equipped

Front Floor Liner

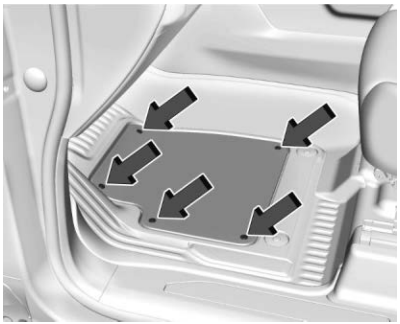

1. Pull up on the edge of the driver side floor liner insert to unlock each button clip and remove.
2. Reinstall by lining up the floor mat retainer openings over the button clips and snapping them into position.
3. Make sure the floor liner insert is secured in place. Verify the floor liner does not interfere with the pedals.

Removing and Replacing the Rear Floor Liners, If Equipped

Rear Floor Liners

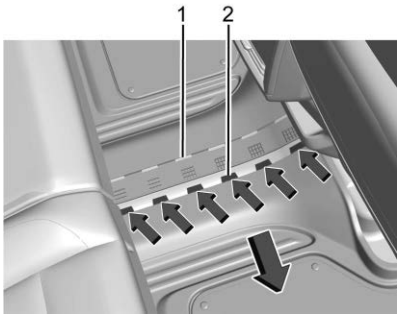

1. Lift one side of the floor liner up to unlock it. Remove the tabs (2) from the slots (1).
2. Reinstall by lining up the tabs (2) and slots (1), then press one side down to lock the liners into position.
3. Place the liner over the footwell area and press it into place.

NOT FOR RESALE

Cleaning Rubber Floor Mats (All-Weather Mats and Floor Liners)

See “Vinyl/Rubber Floor and Mats” under *Interior Care* ⇨ *405* for important cleaning information.

NOT FOR RESALE

Service and Maintenance

General Information
General Information 411
Maintenance Schedule
Maintenance Schedule 412
Multi-Point Vehicle Inspection (MPVI)
Multi-Point Vehicle Inspection (MPVI) 415
Special Application Services
Special Application Services 416
Recommended Fluids, Lubricants, and Parts
Recommended Fluids and Lubricants 416
Maintenance Records
Maintenance Records 418

General Information

Your vehicle is an important investment. This section describes the required maintenance for the vehicle. Follow this schedule to help protect against major repair expenses resulting from neglect or inadequate maintenance. It may also help to maintain the value of the vehicle if it is sold. It is the responsibility of the owner to have all required maintenance performed.

Your dealer has trained technicians who can perform required maintenance using genuine replacement parts. They have up-to-date tools and equipment for fast and accurate diagnostics. Many dealers have extended evening and Saturday hours, courtesy transportation, and online scheduling to assist with service needs.

Your dealer recognizes the importance of providing competitively priced maintenance and repair services. With trained technicians, the dealer is the place for routine maintenance such as oil changes and tire rotations and additional maintenance items like tires, brakes, batteries, and wiper blades.

Caution

Damage caused by improper maintenance can lead to costly repairs and may not be covered by the vehicle warranty. Maintenance intervals, checks, inspections, recommended fluids, and lubricants are important to keep the vehicle in good working condition.

Do not have chemical flushes that are not approved by GM performed on the vehicle. The use of flushes, solvents, cleaners, or lubricants that are not approved by GM could damage the vehicle, requiring expensive repairs that are not covered by the vehicle warranty.

The Tire Rotation and Required Services are the responsibility of the vehicle owner. It is recommended to have your dealer perform these services every 12 000 km/7,500 mi. Proper vehicle maintenance helps to keep the vehicle in good working condition, improves fuel economy, and reduces vehicle emissions.

NOT FOR RESALE

Because of the way people use vehicles, maintenance needs vary. There may need to be more frequent checks and services. The Additional Required Services - Normal are for vehicles that:

- Carry passengers and cargo within recommended limits on the Tire and Loading Information label. See *Vehicle Load Limits* ⇨ *201*.
- Are driven on reasonable road surfaces within legal driving limits.
- Use the recommended fuel. See *Recommended Fuel (L4B 2.7L L4 and L76 5.7L V8 Gasoline Engines)* ⇨ *304 Recommended Fuel (L78 6.6L V8 Gasoline Engine)* ⇨ *304 Recommended Fuel (Diesel)* ⇨ *305*.

Refer to the information in the Maintenance Schedule Additional Required Services - Normal Service.

The Additional Required Services - Severe are for vehicles that are:

- Mainly driven in heavy city traffic in hot weather.
- Mainly driven in hilly or mountainous terrain.
- Frequently towing a trailer.
- Used for high speed or competitive driving.
- Used for taxi, police, or delivery service.

Refer to the information in the Maintenance Schedule Additional Required Services - Severe Service.

⚠ Warning

Performing maintenance work can be dangerous and can cause serious injury. Perform maintenance work only if the required information, proper tools, and equipment are available. If they are not, see your dealer to have a trained technician do the work. See *Doing Your Own Service Work* ⇨ *321*.

Maintenance Schedule

Tire Rotation and Required Services Every 12 000 km (7,500 mi)

Tires are rotated to achieve a more uniform wear for all tires. The first rotation is the most important.

Anytime unusual wear is noticed, rotate the tires as soon as possible, check for proper tire inflation pressure, and check for damaged tires or wheels. If the unusual wear continues after the rotation, check the wheel alignment. See *When It Is Time for New Tires* ⇨ *377* and *Wheel Replacement* ⇨ *381*.

- Perform Multi-Point Vehicle Inspection. See *Multi-Point Vehicle Inspection (MPVI)* ⇨ *415*.
- Lubricate body components. See *Exterior Care* ⇨ *400*.

Extended Idle Use

When the vehicle is used in a way that requires extended idle time, one hour of use shall be deemed the same as 53 km (33 mi). See *Driver Information Center (DIC)* ⇨ *131* for hourmeter, if equipped.

NOT FOR RESALE

Additional Required Services — Normal Service

Every 12 000 km (7,500 mi)

- Check engine oil level and oil life percentage. If needed, change engine oil and filter, and reset oil life system. Or when the CHANGE ENGINE OIL SOON message displays, have the engine oil and filter changed within the next 1 000 km/600 mi. If driven under the best conditions, the engine oil life system may not indicate the need for vehicle service for up to a year. The engine oil and filter must be changed at least once a year and the oil life system must be reset. Your trained dealer technician can perform this work. If the engine oil life system is reset accidentally, service the vehicle within 5 000 km/3,000 mi since the last service. Reset the oil life system when the oil is changed. See *Engine Oil Life System* ⇨ *333*.
- When the REPLACE AT NEXT OIL CHANGE message displays, the engine air filter should be replaced at the next engine oil change. When the REPLACE ENGINE AIR FILTER SOON message displays, the engine air filter should be replaced at the earliest convenience. Reset the engine air filter life system after the engine air filter is replaced. See *Engine Air Filter Life System* ⇨ *334*.

Every 36 000 km (22,500 mi)

- Replace passenger compartment air filter. Or every 24 months, whichever comes first. More frequent passenger compartment air filter replacement may be needed if driving in areas with heavy traffic, poor air quality, high dust levels, or environmental allergens. Passenger compartment air filter replacement may also be needed if there is reduced airflow, window fogging, or odors. Your GM dealer can help determine when to replace the filter.

Every 48 000 km (30,000 mi)

- *Diesel Only* - Replace fuel filter. Or every two years, or when the CHANGE FUEL FILTER message in the Driver Information Center comes on, whichever comes first. The fuel filter may need to be replaced more often based on biodiesel usage, driving in climates with severe dust, off-road driving, or towing a trailer for extended periods.

Every 96 000 km (60,000 mi)

- Replace spark plugs. Inspect spark plug wires and/or boots. (2.7L L4 Turbo Engine Only)

Every 156 000 km (97,500 mi)

- Replace spark plugs. Inspect spark plug wires and/or boots. (5.7L and 6.6L V8 Engines Only)

Every 161 000 km (100,000 mi)

- Replace hood and/or body lift support gas struts. Or every 10 years, whichever comes first. See *Gas Strut(s)* ⇨ *354*.
- Change transfer case fluid, if equipped with 4WD. Do not directly power wash the transfer case and/or front/rear axle output seals. High pressure water can overcome the seals and contaminate the transfer case fluid. Contaminated fluid will decrease the life of the transfer case and/or axles and should be replaced.

Every 240 000 km (150,000 mi)

- Drain and fill engine cooling system. Or every six years, whichever comes first. See *Cooling System (Gasoline)* ⇨ *337 Cooling System (Diesel)* ⇨ *340*.

NOT FOR RESALE

Every 320 000 km (200,000 mi)

- *Diesel Only* - Replace oil pump belt. Or every 15 years, whichever comes first.

Severe Conditions Requiring More Frequent Maintenance*

- Public service, military, or commercial use vehicles to include the following:
  - Ambulances, police cars, and emergency rescue vehicles.
  - Civilian vehicles such as light duty pick-up trucks, SUVs, and passenger cars that are used in military applications.
  - Recovery vehicles such as tow trucks and flatbed single vehicle carriers or any vehicle that is consistently used in towing trailers or other loads.
  - High use commercial vehicles such as courier delivery vehicles, private security patrol vehicles, or any vehicles that operate on a 24–hour basis.
  - Any vehicle consistently operated in a high sand or dust environment such as those used on oil pipelines and similar applications.
- Vehicles that are regularly used for short trips of 6 km (4 mi) or less.

  The oil life indicator will show you when to change the oil and filter. Under severe conditions the indicator may come on before 12 000 km (7,500 mi).

  * Footnote: Under extreme driving conditions listed above, it may be necessary to replace your spark plugs at more frequent intervals. For further assistance in determining the most suitable service maintenance intervals for your vehicle, please contact your authorized GM Dealer.

  Extreme service is for vehicles mainly driven off-road in four-wheel drive or used in farming, mining, forestry, or snow plowing.

Additional Required Services — Severe Service

Every 72 000 km (45,000 mi)

- Change automatic transmission fluid and filter.

Every 80 500 km (50,000 mi)

- Change transfer case fluid, if equipped with 4WD. Do not directly power wash the transfer case and/or front/rear axle output seals. High pressure water can overcome the seals and contaminate the transfer case fluid. Contaminated fluid will decrease the life of the transfer case and/or axles and should be replaced.

Owner Checks and Services

Every Five Years

- Replace brake fluid.

Every Seven Years

- Replace Air Conditioning Desiccant every seven years. The air conditioning system requires maintenance every seven years. This service requires replacement of the desiccant to help the longevity and efficient operation of the air conditioning system. This service can be complex. See your dealer.

NOT FOR RESALE

Multi-Point Vehicle Inspection (MPVI)

A Multi Point Vehicle Inspection completed by a trained technician is a maintenance assessment of your vehicle. The benefit of the Multi Point Vehicle Inspection is to identify service items that require immediate attention and those that may require attention in the future.

The technician will perform the following checks on your vehicle. You can obtain a copy of the appropriate Multi Point Vehicle Inspection checklist on your country's GM Certified Service website. For a complete list of checks, inspections, and services, see your dealer.

Some items may not apply to your vehicle and/or region.

Diagnostics

- OnStar active, if equipped
- Service history/recall check

Engine Oil and Filter

- Engine oil
- Oil life monitor
  - Reset oil life monitor

Exterior Lights

- Visual inspection

Windshield and Wipers

- Visual inspection

12 Volt Battery

- Battery visual inspection
- Battery test results
- Battery cables and connections

Systems, Fluids, and Visible Leak Inspection

- Engine oil
- Transmission
- Drive axle
- Transfer case
- Engine cooling system
- Power steering, if equipped
- Fuel system
- Windshield washer fluid

Tire Inspection

- Tire pressure, tread depth, and wear
- Rotation, if applicable
- Alignment check, optional
- Reset tire pressure monitor
- Check tire sealant expiration date, if equipped
- Check spare tire, if equipped

Brakes

- Check brake system

Visible and Functional Inspections

- Seat belt components
- Exhaust system
- Accelerator pedal
- Passenger compartment air filter, if equipped
- Engine air filter
- Hoses
- Belts
- Shocks and struts
- Steering components

NOT FOR RESALE

- Axle boots or driveshaft and u-joints
- Compartment lift struts, if equipped
- Floor mats secured, no interference with pedals
- Horn
- Ignition lock, if equipped
- Starter switch
- Evaporative control system

Lubricate

- Chassis components

Special Application Services

- Severe Commercial Use Vehicles Only: Lubricate chassis components every oil change.
- Have underbody flushing service performed. See "Underbody Maintenance" in *Exterior Care* ⇨ *400*.

Recommended Fluids, Lubricants, and Parts

Recommended Fluids and Lubricants

Fluids and lubricants identified below by name or specification, including fluids or lubricants not listed here, can be obtained from your dealer.

Usage	Fluid/Lubricant
Automatic Transmission	DEXRON ULV Automatic Transmission Fluid.
Diesel Exhaust Aftertreatment System	Diesel Exhaust Fluid that meets ISO 22241 or displays the API Diesel Exhaust Fluid Certification Mark.
Chassis Lubrication	Chassis lubricant meeting requirements of NLGI #2, Category LB or GC-LB.
Engine Coolant	50/50 mixture of clean, drinkable water and use only dexcool coolant. See *Cooling System (Gasoline)* ⇨ *337 Cooling System (Diesel)* ⇨ *340*.
Charge Air Coolant (Diesel Only)	50/50 mixture of clean, drinkable water and use only dexcool coolant. See *Cooling System (Gasoline)* ⇨ *337 Cooling System (Diesel)* ⇨ *340*.

NOT FOR RESALE

Usage	Fluid/Lubricant
Engine Oil	*Gasoline* - Engine oil meeting the dexos1 specification of the proper SAE viscosity grade. ACDelco dexos1 full synthetic is recommended. *Diesel* - Engine oil meeting the dexosD specification of the proper SAE viscosity grade. ACDelco dexosD is recommended. See *Engine Oil (Gasoline)* ⇨ *329 Engine Oil (Diesel)* ⇨ *331* for viscosity and other information.
Front and Rear Axle Driveshaft Splines	See your dealer.
Front Axle (Four-Wheel Drive) and Rear Axle	See your dealer.
Hydraulic Brake System	DOT 4 Hydraulic Brake Fluid. See *Brake Fluid* ⇨ *349*.
Key Lock Cylinders, Hood Hinges, Body Door Hinge Pins, Tailgate Hinge and Linkage, Fuel Door Hinge, Tailgate Handle Pivot Points, Hinges, Latch Bolt, and Linkage	Multi-Purpose Lubricant, Superlube. See your dealer.
Transfer Case (Four-Wheel Drive)	DEXRON-VI Automatic Transmission Fluid.
Weatherstrip Conditioning	Weatherstrip lubricant. See your dealer.
Windshield Washer	Automotive windshield washer fluid that meets regional freeze protection requirements.

NOT FOR RESALE

Maintenance Records

After scheduled services are performed, record the date, odometer reading, who performed the service, and the type of services performed in the boxes provided. Retain all maintenance receipts.

Date	Odometer Reading	Serviced By	Services Performed

NOT FOR RESALE

Technical Data

Vehicle Identification
Vehicle Identification Number (VIN) 419
Service Parts Identification 419
Vehicle Data
Capacities and Specifications 420
Engine Drive Belt Routing 423

Vehicle Identification

Vehicle Identification Number (VIN)



This legal identifier is in the front corner of the instrument panel, on the driver side of the vehicle. It can be seen through the windshield from outside. The Vehicle Identification Number (VIN) also appears on the Vehicle Certification label and certificates of title and registration.

Engine Identification

The eighth character in the Vehicle Identification Number (VIN) is the engine code. This code identifies the vehicle engine, specifications, and replacement parts. See "Engine Specifications" under *Capacities and Specifications* ⇨ *420* for the vehicle engine code.

Service Parts Identification

The certification label provides vehicle service information to the service technician.

There may be a large barcode on the certification label on the door frame that the service technician can scan for the following information:

- Vehicle Identification Number (VIN)
- Model designation
- Paint information
- Production options

If there is not a large barcode on this label, the same information can be found on a label inside the glove box.

NOT FOR RESALE

Vehicle Data

Capacities and Specifications

The following approximate capacities are given in metric and English conversions. See *Recommended Fluids and Lubricants* ⇨ *416*.

Application	Capacities	
	Metric	English
Air Conditioning Refrigerant	For the air conditioning system refrigerant type and charge amount, see the refrigerant label under the hood. See your dealer for more information.	
Engine Cooling System*		
2.7L L4 (L4B)	11.8 L	12.4 qt
5.7L V8 (L76)	16.4 L	17.3 qt
6.6L V8 (L78)	16.0 L	16.9 qt
3.0L L6 (LZ0)	18.4 L	19.4 qt
Diesel Exhaust Fluid (DEF) Tank**	28.0 L	7.4 gal
Engine Oil with Filter		
2.7L L4 (L4B)	5.7 L	6.0 qt
5.7L V8 (L76)	7.6 L	8.0 qt

NOT FOR RESALE

Application	Capacities	
	Metric	English
6.6L V8 (L78)	7.6 L	8.0 qt
3.0L L6 (LZ0)	7.6 L	8.0 qt
Fuel Tank		
L4B engine (except Long Box)	90.8 L	24.0 gal
Long Box	107.1 L	28.0 gal
L76 engine with Crew/Extended Cab, and Regular Cab with Standard Box (no 34.0 gal option for Regular Cab)	Standard – 90.8 L Optional – 128.7 L	24.0 gal 34.0 gal
L78 engine	128.7 L	34.0 gal
LZ0 engine	Standard – 90.8 L Optional – 128.7 L	24.0 gal 34.0 gal
Transfer Case Fluid	1.5 L	1.6 qt
Wheel Nut Torque	190 N•m	140 lb ft
All capacities are approximate. When adding, be sure to fill to the approximate level, as recommended in this manual. Recheck fluid level after filling.		

NOT FOR RESALE

Application	Capacities	
	Metric	English
*Engine cooling system capacity values are based on the entire cooling system and its components.		
**Do not overfill the DEF tank. See *Diesel Exhaust Fluid* ⇨ *218*.		

Engine Specifications

Engine	VIN Code	Spark Plug Gap
2.7L L4 Gasoline Engine (L4B)	E	0.65–0.75 mm (0.026–0.030 in)
5.7L V8 Gasoline Engine (L76)	M	0.95–1.10 mm (0.037–0.043 in)
6.6L V8 Gasoline Engine (L78)	N	0.95–1.10 mm (0.037–0.043 in)
3.0L L6 Turbo Diesel Engine (LZ0)	8	N/A
Spark plug gaps are preset by the manufacturer. Re-gapping the spark plug is not recommended and can damage the spark plug.		

NOT FOR RESALE

Engine Drive Belt Routing

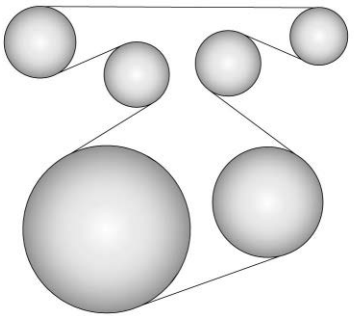

2.7L (L4B) Gas Engine

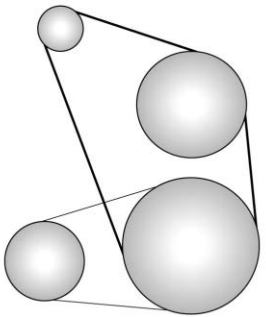

5.7L (L76) and 6.6L (L78) Gas Engines

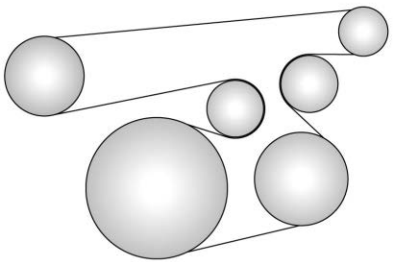

3.0L (LZ0) Diesel Engine

NOT FOR RESALE

Customer Information

Customer Information
Customer Satisfaction Procedure 424
California Warranty Information 426
Customer Assistance Offices 428
Customer Assistance for Text Telephone (TTY) Users 428
Online Account and Customer Support ...428
GM Mobility Reimbursement Program (U.S. Only) 429
Roadside Assistance Program 429
Scheduling Service Appointments 431
Courtesy Transportation Program 431
If a Crash Occurs 432
Collision Damage Repair 432
Publication Ordering Information 433
Radio Frequency Statement 434
Disclosures (New Mexico) 434

Reporting Safety Defects
Reporting Safety Defects to the United States Government 434
Reporting Safety Defects to the Canadian Government 435
Reporting Safety Defects to General Motors 435

Vehicle Data Recording and Privacy
Vehicle Data Recording and Privacy 435
Cybersecurity 435
Event Data Recorders 436
OnStar 436
Infotainment System 436

Customer Satisfaction Procedure

Your satisfaction and goodwill are important to your dealer and to GMC. Normally, any concerns with the sales transaction or the operation of the vehicle will be resolved by your dealer's sales or service departments. Sometimes, however, despite the best intentions of all concerned, misunderstandings can occur. If your concern has not been resolved to your satisfaction, the following steps should be taken:

STEP ONE: Discuss your concern with a member of dealership management. Normally, concerns can be quickly resolved at that level. If the matter has already been reviewed with the sales, service, or parts manager, contact the owner of your dealership or the general manager.

STEP TWO: If after contacting a member of dealership management, it appears your concern cannot be resolved by your dealership without further help, in the U.S., call 1-800-462-8782. In Canada, call General Motors of Canada Customer Care Centre at 1-800-263-3777 (English), or 1-800-263-7854 (French).

NOT FOR RESALE

We encourage you to call the toll-free number in order to give your inquiry prompt attention. Have the following information available to give the Customer Assistance representative:

- Vehicle Identification Number (VIN). This is available from the vehicle registration or title, or the plate at the top left of the instrument panel and visible through the windshield.
- Dealership name and location.
- Vehicle delivery date and present mileage.

When contacting GMC, remember that your concern will likely be resolved at a dealer's facility. That is why we suggest following Step One first.

STEP THREE — U.S. Owners: Both GM and your GM dealer are committed to making sure you are completely satisfied with your new vehicle. However, if you continue to remain unsatisfied after following the procedure outlined in Steps One and Two, you can file with the Better Business Bureau (BBB) AUTO LINE Program to enforce any additional rights you may have.

The BBB AUTO LINE Program is an out-of-court program administered by the BBB National Programs, Inc. to settle automotive disputes regarding vehicle repairs or the interpretation of the New Vehicle Limited Warranty. Although you may be required to resort to this informal dispute resolution program prior to filing a court action, use of the program is free of charge and your case will generally be heard within 40 days. If you do not agree with the decision given in your case, you may reject it and proceed with any other venue for relief available to you. When contacting the BBB AUTO LINE, you will need to provide the following information: Owner's name and address, Vehicle identification number (VIN), the Year, Make, Model, mileage of the vehicle and provide a description of the concern.

Contact the BBB AUTO LINE Program using the toll-free telephone number or write them at the following address:

BBB AUTO LINE Program
BBB National Programs, Inc.
1676 International Drive
Suite 550
McLean, VA 22102

Telephone: 1-800-955-5100
www.bbbautoline.org

This program is available in all 50 states and the District of Columbia. Eligibility is limited by vehicle age, mileage, and other factors. General Motors reserves the right to change eligibility limitations and/or discontinue its participation in this program.

STEP THREE — Canadian Owners: In the event that you do not feel your concerns have been addressed after following the procedure outlined in Steps One and Two, General Motors of Canada Company wants you to be aware of its participation in a no-charge Mediation/Arbitration Program. General Motors of Canada Company has committed to binding arbitration of owner disputes involving factory-related vehicle service claims. The program provides for the review of the facts involved by an impartial third party arbiter, and may include an informal hearing before the arbiter. The program is designed so that the entire dispute settlement process, from the time you file your complaint to the final decision, should be completed in about 70 days. We believe our impartial program offers advantages over courts in most jurisdictions because it is informal, quick, and free of charge.

For further information concerning eligibility in the Canadian Motor Vehicle Arbitration Plan (CAMVAP), call toll-free 1-800-207-0685, or call

NOT FOR RESALE

the General Motors Customer Care Centre, 1-800-263-3777 (English), 1-800-263-7854 (French), or write to:

Mediation/Arbitration Program
c/o Customer Care Centre
General Motors of Canada Company
500 Wentworth Street W
Oshawa, ON L1J 0C5

Your inquiry should be accompanied by the Vehicle Identification Number (VIN).

California Warranty Information

The Song-Beverly Consumer Warranty Act provides consumers who purchase or lease a new motor vehicle in California with certain rights if their vehicle has nonconformities that GM or its authorized repair facilities (e.g., GM dealers) are unable to repair after a reasonable number of attempts.

Applied to your vehicle, California Civil Code Section 1793.2(d) requires that, if GM or its authorized repair facilities are unable to repair a new motor vehicle to conform to the vehicle's applicable express warranties after a reasonable number of attempts, GM shall either replace the new motor vehicle or provide restitution in accordance with a statutory formula.

California Civil Code Section 1793.22(b) creates a presumption that GM has had a reasonable number of attempts to conform the vehicle to its applicable express warranties if, within 18 months from delivery to the buyer or 18,000 miles on the vehicle's odometer, whichever occurs first, one or more of the following occurs:

- The same nonconformity results in a condition that is likely to cause death or serious bodily injury if the vehicle is driven AND the nonconformity has been subject to repair two or more times by GM or its authorized repair facilities (e.g., dealers) AND the buyer or lessee has at least once directly notified GM of the need for the repair of the nonconformity by mailing such notification to the address listed below.
- The same nonconformity has been subject to repair four or more times by GM or its authorized repair facilities AND the buyer has at least once directly notified GM of the need for the repair of the nonconformity by mailing such notification to the address listed below.
- The vehicle is out of service by reason of repair nonconformities by GM or its authorized repair facilities for a cumulative total of more than 30 calendar days after delivery of the vehicle to the buyer.

If you purchased or leased a new motor vehicle in California and GM or its authorized repair facilities have been unable to repair the vehicle to conform it to applicable express warranties within a reasonable number of attempts, you may be eligible for relief under the Song-Beverly Consumer Warranty Act. You can submit a claim with the BBB AUTO LINE Program (see *Customer Satisfaction Procedure* ⇨ *424*) or you can request in writing that GM replace or repurchase your vehicle.

Notice to General Motors regarding warranty issues must be sent either by email to californiawarrantynotice@gm.com or by certified or registered mail, return receipt requested, to the following address:

California Repurchase Notice
P.O. Box 33173
Detroit, MI 48232-5173

NOT FOR RESALE

Any repurchase request must include your name, the accurate Vehicle Identification Number ("VIN") of your vehicle, a brief summary of the repair history and problems with the vehicle.

Información de garantía de California

La Ley de Garantía del Consumidor Song-Beverly brinda a los consumidores que compran o alquilan un vehículo automotor nuevo en California ciertos derechos si su vehículo presenta inconformidades que GM o sus talleres de reparación autorizadas (por ejemplo, los distribuidores de GM) no pueden reparar después de una cantidad razonable de intentos.

Aplicado a su vehículo, la Sección 1793.2(d) del Código Civil de California requiere que, si GM o sus talleres de reparación autorizadas no pueden reparar un vehículo automotor nuevo para cumplir con las garantías expresas aplicables del vehículo después de una cantidad razonable de intentos, GM deberá reemplazar el vehículo automotor nuevo o proporcionar una restitución de acuerdo con una fórmula legal.

La Sección 1793.22(b) del Código Civil de California crea una presunción de que GM ha realizado un número razonable de intentos para adaptar el vehículo a sus garantías expresas aplicables si, dentro de los 18 meses desde la entrega al comprador o 18,000 millas en el odómetro del vehículo, lo que ocurra primero, ocurre uno o más de los siguientes:

- La misma inconformidad da como resultado una condición que probablemente cause la muerte o lesiones corporales graves si se conduce el vehículo Y la inconformidad ha sido objeto de reparación dos o más veces por GM o sus talleres de reparación autorizadas (por ejemplo, distribuidores) Y el comprador o arrendatario ha notificado directamente por lo menos una vez a GM sobre la necesidad de reparar la inconformidad enviando dicha notificación por correo a la dirección que se indica a continuación.
- La misma inconformidad ha sido objeto de reparación cuatro o más veces por GM o sus talleres de reparación autorizadas Y el comprador ha notificado directamente por lo menos una vez a GM sobre la necesidad de la reparación de la inconformidad enviando dicha notificación a la dirección que se indica a continuación.
- El vehículo está fuera de servicio debido a inconformidades de reparación por parte de GM o sus talleres de reparación autorizadas por un total acumulado de más de 30 días calendario después de la entrega del vehículo al comprador.

Si compró o alquiló un vehículo automotor nuevo en California y GM o sus talleres de reparación autorizados no han podido reparar el vehículo para cumplir con las garantías expresas aplicables dentro de una cantidad razonable de intentos, puede ser elegible para recibir ayuda bajo la Ley de Garantía del Consumidor Song-Beverly. Puede presentar un reclamo ante el Programa BBB AUTO LINE (consulte el Procedimiento de satisfacción del cliente) o puede solicitar por escrito que GM reemplace o recompre su vehículo.

El aviso a General Motors sobre problemas de garantía debe enviarse por correo electrónico a californiawarrantynotice@gm.com o por correo certificado o registrado, con acuse de recibo solicitado, a la siguiente dirección:

Aviso de recompra de California
P.O. Box 33173

NOT FOR RESALE

Detroit, MI 48232-5173

La solicitud para reemplazo o recompra debe incluir su nombre, el Número de identificación del vehículo ("NIV") preciso de su vehículo, un breve resumen del historial de reparación y problemas con el vehículo.

Customer Assistance Offices

GMC is committed to assisting customers. Visit us online at www.gmc.com/support (U.S.) or www.gmccanada.ca/en/owners (Canada) to chat with us or find answers to commonly asked questions, tips, vehicle how-to instructions, and available support.

Need more help? Use the telephone numbers or mailing addresses below for additional assistance.

United States and Puerto Rico

GMC Customer Assistance Center
P.O. Box 33172
Detroit, MI 48232-5172

1-800-GMC-8782 (1-800-462-8782)

TTY: Dial 711 relay service and contact 1-800-833-2438

Roadside Assistance: 1-888-881-3302

Canada

Customer Care Centre
General Motors of Canada Company
500 Wentworth Street W
Oshawa, ON L1J 0C5

1-800-263-3777 (English)

1-800-263-7854 (French)

1-800-263-3830 (For Text Telephone Devices (TTYs))

Roadside Assistance: 1-800-268-6800

Overseas

Please contact the local General Motors Business Unit.

Customer Assistance for Text Telephone (TTY) Users

To assist customers who are deaf, hard of hearing, or speech-impaired and/or who use Text Telephones (TTYs), please dial the national 711 relay service and contact 1-800-833-2438. TTY users in Canada can dial 1-800-263-3830.

Online Account and Customer Support

Create a GMC Account (U.S.) at gmc.com

Learn more about your vehicle features, shop for and manage your connected services and OnStar plans, and access diagnostic information specific to your vehicle. Visit gmc.com and create an account today.

Membership Benefits

: Download owner's manuals and view vehicle-specific how-to videos.

: View maintenance schedules, alerts, and Vehicle Diagnostic Information. Schedule service appointments.

: View service records from your dealership and add your own.

: Select a dealer and view locations, maps, phone numbers, and hours.

: Track your vehicle warranty information.

: View active recalls by Vehicle Identification Number. See *Vehicle Identification Number (VIN)* ⇨ *419*.

NOT FOR RESALE

: Manage your profile and payment information. View your GM Rewards Card earnings and My GMC Rewards points.

: Chat live with online help representatives.

GMC Account (Canada)

Visit your GMC Account at gmccanada.ca/en (English) or gmccanada.ca/fr (French) to access similar benefits.

GM Mobility Reimbursement Program (U.S. Only)



This program is available to qualified applicants for cost reimbursement, up to certain limits, of eligible aftermarket adaptive equipment required for the vehicle, such as hand controls or a wheelchair/scooter lift for the vehicle.

To learn about the GM Mobility program, call the GM Mobility Assistance Center at 1-800-323-9935. Text Telephone (TTY) users, please dial the national 711 relay service and contact 1-800-323-9935.

Roadside Assistance Program

From the U.S., call 1-888-881-3302. Text Telephone (TTY) Users (U.S. Only): Contact 711 relay service and provide 1-888-881-3302.

From Canada, call 1-800-268-6800.

Service is available 24 hours a day, 365 days a year.

Calling for Assistance

When calling Roadside Assistance, have the following information ready:

- Your name, home address, and home telephone number
- Your mobile telephone number or the telephone number of your current location
- Location of the vehicle
- Model, year, color, and license plate number of the vehicle
- Odometer reading and Vehicle Identification Number (VIN)
- Description of the problem

Coverage

Vehicles with an active Powertrain Warranty receive service.

In the U.S. and Canada, Roadside coverage applies only when the person operating the vehicle has the owner's permission to drive it.

Roadside Assistance is available for vehicles within the applicable Powertrain Limited Warranty coverage period or the Electric Vehicle/Hybrid Vehicle Propulsion coverage period. General Motors North America and GMC can make any changes or discontinue the Roadside Assistance program at any time without notification.

General Motors North America and GMC may choose to limit services or payment to an owner or driver if they decide the driver is making claims too often or made the same type of claim too frequently.

Services Provided

- **Emergency Fuel Delivery:** Delivery of enough fuel for the vehicle to get to the nearest service station. Fuel will not be delivered to vehicles at a service station.

NOT FOR RESALE

- **Lock-Out Service:** Service to unlock the vehicle if you cannot open the doors. For security reasons, the driver must present identification to receive service. A remote unlock may be available if you have OnStar.
- **Emergency Tow from a Public Road or Highway:** Tow to the nearest GMC dealer for warranty service, or if a vehicle cannot drive due to a crash.
- **Flat Tire Change:** Service to change a flat tire with the spare tire. The spare tire, if equipped, must be in good condition and properly inflated. If the warranty does not cover the tire, it is the owner's responsibility to repair or replace it.
- **Battery Jump Start:** Service to jump start a dead battery.
- **Trip Interruption Benefits and Assistance:** If you cannot continue your trip due to a warranty event, Roadside Assistance may reimburse incidental expense within the Powertrain Warranty period. This includes hotels, meals, rental car, or a vehicle being delivered back to the customer, up to 500 miles.

Services Not Included in Roadside Assistance

- Delivery of fuel to vehicles at a service station
- Impound towing caused by violation of any laws
- Reimbursement of legal fines
- Reimbursement of police mandated tows
- Mounting, dismounting, or changing of snow tires, chains, or other traction devices
- Towing of anything attached to the vehicle like boats, campers, trailers, cargo boxes, etc.
- Vehicles stranded due to off-road driving
- Vehicles stuck in the sand, mud, or snow
- Ferry towing (Customers are responsible for the coordination and payment of any ferry involvement prior to Roadside dispatching)
- Airfare reimbursement

Roadside Assistance does not provide service of a vehicle in an area that is not accessible to the service vehicle or is not a regularly traveled or maintained public road, which includes ice and winter roads. Customers do not receive vehicle service on restricted roadways. This includes, but are not partial to, some highways, tunnels, toll roads, toll bridges, turnpikes, and service roads.

Services Specific to Canadian-Purchased Vehicles

- **Fuel Delivery:** Reimbursement is up to 7 liters. Diesel fuel delivery may be restricted. This service does not provide propane and other fuels. Fuel will not be delivered to vehicles at a service station.
- **Lock-Out Service:** Requires vehicle registration.
- **Trip Interruption Benefits and Assistance:** Must be traveling 150 km from the start of the trip to qualify. Benefits and assistance require pre-authorization, original detailed receipts, and a copy of the repair orders. When the Roadside Assistance advisor receives permission, they will help to explain and plan how to receive payment. Examples of benefits and assistance include hotels, meals, and rental car.

NOT FOR RESALE

- **Alternative Service:** The Roadside Assistance advisor may allow local emergency road service if the customer cannot receive immediate service. You will receive payment, up to $100, after sending the original receipt to Roadside Assistance. The vehicle owner is responsible for any costs for parts and labor for repairs the warranty does not cover. Coverage may also apply to mechanical failures.

Scheduling Service Appointments

If your vehicle requires service, contact your dealer and request an appointment. By scheduling a service appointment and advising the service consultant of your transportation needs, your dealer can help minimize your inconvenience. Be sure to notify your dealer of any safety-related concerns when requesting the appointment.

If you cannot schedule service immediately, keep driving the vehicle until your scheduled appointment, unless the problem is safety related.

If you are seeking a same-day repair, schedule your appointment as early in the day as possible.

Courtesy Transportation Program

GM and our participating dealers are proud to offer Courtesy Transportation. This customer support program minimizes inconvenience during warranty repairs for vehicles with the Bumper-to-Bumper (Base Warranty Coverage period in Canada), Federal Emission, Extended Powertrain, or Electric-specific warranties in both the U.S. and Canada.

Courtesy Transportation is not a part of the New Vehicle Limited Warranty. See the "Limited Warranty and Owner Assistance Information" manual for detailed new vehicle warranty coverage information.

Transportation Options

Warranty service is often completed while you wait. If not, your dealer may offer these transportation options:

Shuttle Service

One-way or round-trip shuttle service within a reasonable time and distance from your dealer.

Public Transportation, Ridesharing App, or Fuel Reimbursement

If your vehicle is kept overnight for repairs and you use public transportation or a ridesharing app, original receipts must support the expense within GM's allowed maximum to qualify for reimbursement. If U.S. customers arrange their own transportation, limited reimbursement for reasonable fuel expenses may be available. Claims should reflect actual costs and must be supported by original receipts. See your dealer for information.

Courtesy Rental Vehicle

For an overnight warranty repair, the dealer may offer a courtesy rental vehicle or reimburse rental costs. Reimbursement requires original receipts, a signed and complete rental agreement, and must meet state/provincial, local and rental vehicle provider requirements, which may include, minimum age requirements, insurance coverage, and credit card. Additional fees for fuel, rental vehicle insurance, taxes, levies, usage fees, excessive mileage, or rental usage beyond the completion of the repair are your responsibility.

NOT FOR RESALE

A like vehicle may not be available as a courtesy rental.

Additional Program Information

Not all program options, like shuttle service, are available at every dealer. Contact your dealer for availability.

General Motors reserves the right to unilaterally modify, change, or discontinue Courtesy Transportation at any time and to resolve all questions of claim eligibility pursuant to the terms and conditions described herein at its sole discretion.

If a Crash Occurs

If there has been an injury, call emergency services for help. Do not leave the scene of a crash until all parties address the matter. Move the vehicle only if its position puts you in danger, or a police officer tells you to move it.

Give only the necessary information to police and other parties involved in the crash.

For emergency towing see *Roadside Assistance Program* ⇨ *429*.

Gather the following information:

- Driver name, address, and telephone number
- Driver license number
- Owner name, address, and telephone number
- Vehicle license plate number
- Vehicle make, model, and model year
- Vehicle Identification Number (VIN)
- Insurance company and policy number
- General description of the damage to the other vehicle

Choose a reputable repair facility that uses quality replacement parts. See "Collision Parts" in *Collision Damage Repair* ⇨ *432*.

If the airbag has inflated, see *What Will You See After an Airbag Inflates?* ⇨ *68*.

Collision Damage Repair

If the vehicle is damaged in a collision, have it repaired by a qualified technician using the proper equipment and Genuine GM Collision replacement parts. Poorly performed collision repairs diminish the vehicle resale value and safety performance.

Managing the Vehicle Damage Repair Process

Repair Facility

Taking an active role in the vehicle repair process is important. Choose a collision repair facility that meets your needs before you ever need collision repairs. Your dealer may have a collision repair center with GM-trained technicians and state-of-the-art equipment or be able to recommend a collision repair center that has GM-trained technicians and comparable equipment.

If you have a preferred repair facility, take the vehicle there, or have it towed there. Specify to the facility that any required replacement collision parts be original equipment parts. Remember, only Genuine GM parts are covered by the GM vehicle warranty. See "Collision Parts" later in this section.

Collision Parts

Genuine GM Collision parts are new parts made with the same materials and construction methods as factory installed parts. Genuine GM Collision parts ensure that the vehicle's designed appearance, durability, and safety

NOT FOR RESALE

features are preserved. The use of Genuine GM parts can help maintain the GM New Vehicle Limited Warranty.

Recycled original equipment parts may be an acceptable choice to maintain the vehicle's appearance and safety performance; however, the history of these parts may not be known. Such parts are not covered by the GM New Vehicle Limited Warranty, and any related failures are not covered by that warranty.

Aftermarket collision parts made by companies other than GM may fit poorly, exhibit premature durability/corrosion problems, and may not perform properly in subsequent collisions. Aftermarket parts are not covered by the GM New Vehicle Limited Warranty, and any vehicle failure related to such parts is not covered by that warranty.

Insuring the Vehicle

Protect your GM vehicle with comprehensive and collision insurance coverage. There are significant differences in the quality of coverage afforded by various insurance policy terms. If the vehicle is repaired with any parts that are not GM original equipment collision parts, they will not be covered or under warranty. If such insurance coverage is not available from your current insurance carrier, consider switching to another insurance carrier.

If you are leasing your vehicle, the leasing company may require you to have insurance that ensures repairs with Genuine GM Original Equipment Manufacturer parts or Genuine Manufacturer replacement parts. Read the lease carefully, as you may be charged at the end of the lease for poor quality repairs.

Depending on your policy limits, your insurance company may initially value the repair using aftermarket parts. Discuss this with the repair professional and insist on Genuine GM parts. Remember, if the vehicle is leased, you may be obligated to have the vehicle repaired with Genuine GM parts, even if your insurance coverage does not pay the full cost.

If another party's insurance company is paying for the repairs, you are not obligated to accept a repair valuation based on that insurance company's collision policy repair limits, as you have no contractual limits with that company. In such cases, you can have control of the repair and parts choices if the cost stays within reasonable limits.

Publication Ordering Information

Service Manuals

Service manuals have the diagnosis and repair information on the engine/propulsion, transmission, axle, suspension, brakes, electrical system, steering system, body, etc.

Customer Literature

Owner's manuals are written specifically for owners and are intended to provide basic operational information about the vehicle. The owner's manual includes the Maintenance Schedule for all models.

Customer literature publications available for purchase include owner's manuals, warranty manuals, and portfolios. Portfolios include an owner's manual, warranty manual, if applicable, and zip lock bag or pouch.

Current and Past Models

Service manuals and customer literature are available for many GM vehicles.

To check availability and to order, call 1-800-551-4123 Monday–Friday, 8:00 a.m.–6:00 p.m. Eastern Time

NOT FOR RESALE

For credit card orders only (VISA, MasterCard, or Discover), see Helm, Inc. at: www.helminc.com.

To order by mail, write to:

Helm Incorporated
Attention: Customer Service
47911 Halyard Drive, Suite 200
Plymouth, MI 48170

Make checks payable in U.S. funds.

Radio Frequency Statement

This vehicle uses license-exempt transmitters / receivers / systems that operate on a radio frequency that complies with Part 15/Part 18 of the Federal Communications Commission (FCC) rules and with Innovation, Science and Economic Development (ISED) Canada's license-exempt RSS(s) / RSP-100 / ICES-GEN.

Operation is subject to the following two conditions:

1. The device may not cause harmful interference.
2. The device must accept any interference received, including interference that may cause undesired operation of the device.

Changes or modifications to any of these systems by other than an authorized service facility could void authorization to use this equipment.

Disclosures (New Mexico)



Reporting Safety Defects

Reporting Safety Defects to the United States Government

If you believe that your vehicle has a defect which could cause a crash or could cause injury or death, you should immediately inform the National Highway Traffic Safety Administration (NHTSA) in addition to notifying General Motors.

If NHTSA receives similar complaints, it may open an investigation, and if it finds that a safety defect exists in a group of vehicles, it may order a recall and remedy campaign. However, NHTSA cannot become involved in individual problems between you, your dealer, or General Motors.

To contact NHTSA, you may call the Vehicle Safety Hotline toll-free at 1-888-327-4236 (TTY: 888-275-9171); go to *https://www.safercar.gov;* or write to:

Administrator, NHTSA
1200 New Jersey Avenue, S.E.,
Washington, D.C. , 20590

You can also obtain other information about motor vehicle safety from *https://www.safercar.gov*.

NOT FOR RESALE

Reporting Safety Defects to the Canadian Government

If you live in Canada, and you believe that the vehicle has a safety defect, notify Transport Canada immediately, and notify General Motors of Canada Company. Call Transport Canada at 1-800-333-0510; go to:

www.tc.gc.ca/recalls (English)

www.tc.gc.ca/rappels (French)

or write to:

Transport Canada
Motor Vehicle Safety Directorate
Defect Investigations and Recalls Division
80 Noel Street
Gatineau , QC J8Z 0A1

Reporting Safety Defects to General Motors

In addition to notifying NHTSA (or Transport Canada) in a situation like this, notify General Motors.

In the U.S., call 1-800-462-8782, or write:

GMC Customer Assistance Center
P.O. Box 33172
Detroit, MI 48232-5172

In Canada, call 1-800-263-3777 (English) or 1-800-263-7854 (French), or write:

Customer Care Centre
General Motors of Canada Company
500 Wentworth Street W
Oshawa, ON L1J 0C5

In Mexico, call 800-466-0812 or 800-466-0801.

In other Central America and Caribbean Countries, call 52-555-901-2369.

Vehicle Data Recording and Privacy

The vehicle has a number of computers that record information about the vehicle's performance and how it is driven or used. For example, the vehicle uses computer modules to monitor and control engine and transmission performance, to monitor the conditions for airbag deployment and deploy them in a crash, and, if equipped, to provide antilock braking to help the driver control the vehicle. These modules may store data to help the dealer technician service the vehicle or to help GM improve safety or features. Some modules may also store data about how the vehicle is operated, such as rate of fuel consumption or average speed. These modules may retain personal preferences, such as radio presets, seat positions, and temperature settings.

Cybersecurity

GM collects information about the use of your vehicle including operational and safety related information. We collect this information to provide, evaluate, improve, and troubleshoot our products and services and to develop new products and services. The protection of vehicle electronics systems and customer data from unauthorized outside electronic access or control is important to GM. GM maintains appropriate security standards, practices, guidelines and controls aimed at defending the vehicle and the vehicle service ecosystem against unauthorized electronic access, detecting possible malicious activity in related networks, and responding to suspected cybersecurity incidents in a timely, coordinated and effective manner. Security incidents could impact your safety or compromise your private data. To minimize security risks, please do not connect your vehicle electronic systems to unauthorized devices or connect your vehicle to any unknown or untrusted networks (such as

NOT FOR RESALE

Bluetooth, Wi-Fi, or similar technology). In the event you suspect any security incident impacting your data or the safe operation of your vehicle, please stop operating your vehicle and contact your dealer.

Event Data Recorders

This vehicle is equipped with an Event Data Recorder (EDR). The main purpose of an EDR is to record, in certain crash or near crash-like situations, such as an air bag deployment or hitting a road obstacle, data that will assist in understanding how a vehicle's systems performed. The EDR is designed to record data related to vehicle dynamics and safety systems for a short period of time, typically 30 seconds or less. The EDR in this vehicle is designed to record such data as:

- How various systems in your vehicle were operating;
- Whether or not the driver and passenger safety belts were buckled/fastened;
- How far (if at all) the driver was depressing the accelerator and/or brake pedal; and,
- How fast the vehicle was traveling.

These data can help provide a better understanding of the circumstances in which crashes and injuries occur.

Note
EDR data are recorded by your vehicle only if a non-trivial crash situation occurs; no data are recorded by the EDR under normal driving conditions and no personal data (e.g., name, gender, age, and crash location) are recorded. However, other parties, such as law enforcement, could combine the EDR data with the type of personally identifying data routinely acquired during a crash investigation.

To read data recorded by an EDR, special equipment is required, and access to the vehicle or the EDR is needed. In addition to the vehicle manufacturer, other parties, such as law enforcement, that have the special equipment, can read the information if they have access to the vehicle or the EDR.

GM will not access these data or share it with others except: with the consent of the vehicle owner or, if the vehicle is leased, with the consent of the lessee; in response to an official request by police or similar government office; as part of GM's defense of litigation through the discovery process; or, as permitted by law.

Data that GM collects or receives may also be used for GM research needs or may be made available to others for research purposes, where a need is shown and the data is not tied to a specific vehicle or vehicle owner.

OnStar

If the vehicle is equipped with OnStar and has an active service plan, additional data may be collected and transmitted through the OnStar system. This includes information about the vehicle's operation; collisions involving the vehicle; the use of the vehicle and its features, including infotainment; and the location and approximate GPS speed of the vehicle. Refer to the OnStar Terms and Conditions and Privacy Statement on the OnStar website.

See *OnStar Additional Information* ⇨ *438*.

Infotainment System

If the vehicle is equipped with a navigation system as part of the infotainment system, use of the system may result in the storage of destinations, addresses, telephone numbers, and other trip information. See the infotainment section for information on stored data and for deletion instructions.

NOT FOR RESALE

OnStar

OnStar Overview
OnStar Overview 437
OnStar Services
Emergency 438
Security 438
OnStar Additional Information
OnStar Additional Information 438

OnStar Overview

This vehicle may be equipped with a comprehensive, in-vehicle system that can connect to an OnStar Advisor for Emergency, Security, Navigation, Connection, and Diagnostic Services. OnStar services may require a paid service plan and data plan. OnStar requires the vehicle battery and electrical system, cellular service, and GPS satellite signals to be available and operating. OnStar acts as a link to existing emergency service providers.

OnStar may collect information about you and your vehicle, including location information. See OnStar User Terms, Privacy Statement, and Software Terms for more details including system limitations at www.onstar.com (U.S.) or www.onstar.ca (Canada).



White OnStar Button

Blue OnStar Button

Red Emergency Button

The OnStar system status light is next to the OnStar buttons. When the status light is:

- Solid Green: the system is ready.
- Flashing Green: the system is on a call.
- Red: a problem has been detected.
- Off: the system is off. Press On twice to speak with an OnStar Advisor.

Press On or call 1-888-4ONSTAR (1-888-466-7827) to speak to an OnStar Advisor.

Press to end ongoing calls with an OnStar Advisor.

Press On to connect to the OnStar Virtual Assistant to:

- Verify account information or update contact information.
- Request driving directions.
- Request a Diagnostic check of essential operating systems.
- Request Roadside Assistance.
- Manage Wi-Fi Settings, if equipped.

NOT FOR RESALE

Press SOS to get a priority connection to an OnStar Advisor available 24/7 to:

- Request help for an emergency, severe weather, or other crisis situations, and find evacuation routes.
- Be a Good Samaritan or respond to an AMBER Alert.

OnStar Services

Emergency

Emergency Services require an active safety and security plan. With Automatic Crash Response, built-in sensors can automatically connect an OnStar Advisor into the vehicle to help.

Press SOS for a priority connection to an OnStar Advisor who can contact emergency service providers, direct them to your exact location, and relay vital information.

With OnStar Crisis Assist, specially trained OnStar Advisors are available 24 hours a day, 7 days a week, to provide a central point of contact, assistance, and information during a crisis.

With Roadside Assistance, OnStar Advisors can locate a nearby service provider to help with a flat tire or a battery jump.

Security

If equipped, OnStar provides these services:

- Stolen Vehicle Assistance: OnStar Advisors can use GPS to locate the vehicle and help authorities quickly recover it.
- Remote Ignition Block: OnStar can block the vehicle from restarting.
- Stolen Vehicle Slowdown: OnStar can work with law enforcement to gradually slow the vehicle down.

Theft Alarm Notification

When the vehicle alarm system is armed and the alarm is activated, an alert by text, email, or app push notification is sent. If the vehicle is stolen, an OnStar Advisor can work with authorities to recover the vehicle.

OnStar Additional Information

In-Vehicle Audio Messages

Audio messages may play important information at the following times:

- Prior to vehicle purchase. Press On to set up an account.
- After change in ownership.
- Periodically to verify vehicle connectivity status.

Transferring Service

Press On to request account transfer eligibility information. The OnStar Advisor can cancel or change account information.

Selling/Transferring the Vehicle

Call 1-888-4ONSTAR (1-888-466-7827) immediately to terminate your OnStar or connected services if the vehicle is disposed of, sold, transferred, or if the lease ends.

NOT FOR RESALE

Reactivation for Subsequent Owners

Press and follow the prompts to speak to an OnStar Advisor as soon as possible. The OnStar Advisor will update vehicle records and explain OnStar or connected service options.

How OnStar Service Works

Automatic Crash Response, Emergency Services, Crisis Assist, Stolen Vehicle Assistance, Remote Services, and Roadside Assistance are available on most vehicles. Not all OnStar services are available everywhere or on all vehicles. For more information, a full description of OnStar services, system limitations, and OnStar User Terms, Privacy Statement, and Software Terms:

- Call 1-888-4ONSTAR (1-888-466-7827).
- See www.onstar.com (U.S.).
- See www.onstar.ca (Canada).
- Call TTY 1-877-248-2080.
- Press to speak with an OnStar Advisor.

OnStar or connected services cannot work unless the vehicle is in a place where OnStar has an agreement with a wireless service provider for service in that area. The wireless service provider must also have coverage, network capacity, reception, and technology compatible with OnStar or connected services. Service involving location information about the vehicle cannot work unless GPS signals are available, unobstructed, and compatible with the OnStar hardware. OnStar or connected services may not work if the OnStar equipment is not properly installed or it has not been properly maintained. If equipment or software is added, connected, or modified, OnStar or connected services may not work. Other problems beyond the control of OnStar — such as hills, tall buildings, tunnels, weather, electrical system design and architecture of the vehicle, damage to the vehicle in a crash, or wireless phone network congestion or jamming — may prevent service.

Services for People with Disabilities

OnStar Advisors provide services to help with physical disabilities and medical conditions.

Press to help:

- Find a hotel, restaurant, etc., that meets accessibility needs.
- Provide directions to the closest hospital or pharmacy in urgent situations.

TTY Users

OnStar has the ability to communicate to deaf, hard-of-hearing, or speech-impaired customers while in the vehicle. If equipped, the TTY system provides in-vehicle access to all OnStar services, except OnStar Turn-by-Turn Navigation.

Turn your vehicle on and keep it in P (Park). From the infotainment apps screen, access TTY by touching Settings > Apps > Phone > TTY > Enable OnStar TTY mode. When TTY mode is active, you can make and receive phone calls using the infotainment display.

OnStar Personal Identification Number (PIN)

A PIN is needed to access some OnStar services. The PIN will need to be changed the first time when speaking with an OnStar Advisor. To change the OnStar PIN, contact an OnStar Advisor by pressing or calling 1-888-4ONSTAR.

Warranty

OnStar equipment may be warranted as part of the vehicle warranty.

NOT FOR RESALE

Languages

The vehicle can be programmed to respond in multiple languages. Press and ask for an OnStar Advisor. OnStar Advisors are available in English, Spanish, and French. Available languages may vary by country.

Potential Issues

OnStar cannot perform Remote Door Unlock or Stolen Vehicle Assistance after the vehicle has been off continuously for an extended period of time without being started. To find out the duration of time that applies for the vehicle, contact an OnStar Advisor by pressing or calling 1-888-4ONSTAR. If the vehicle has not been started for an extended period of time, OnStar can contact Roadside Assistance or a locksmith to help gain access to the vehicle.

Global Positioning System (GPS)

- Obstruction of the GPS can occur in a large city with tall buildings; in parking garages; around airports; in tunnels and underpasses; or in an area with very dense trees. If GPS signals are not available, the OnStar system should still operate to call OnStar. However, OnStar could have difficulty identifying the exact location.
- In emergency situations, OnStar can use the last stored GPS location to send to emergency responders.

A temporary loss of GPS can cause loss of the ability to send a Turn-by-Turn Navigation route. The OnStar Advisor may give a verbal route or may ask for a call back after the vehicle is driven into an area with greater access to GPS signal.

Cellular and GPS Antennas

Cellular reception is required for OnStar to send remote signals to the vehicle. Do not place items over or near the antenna to prevent blocking cellular and GPS signal reception.

Unable to Connect to OnStar Message

If there is limited cellular coverage or the cellular network has reached maximum capacity, this message may come on. Press to try the call again or try again after driving a few miles into another cellular area.

Vehicle and Power Issues

OnStar services require a vehicle electrical system, wireless service, and GPS satellite technologies to be available and operating for features to function properly. These systems may not operate if the battery is discharged or disconnected.

Add-on Electrical Equipment

The OnStar system is integrated into the electrical architecture of the vehicle. Do not add any electrical equipment. See *Add-On Electrical Equipment* ⇨ *316*. Added electrical equipment may interfere with the operation of the OnStar system and cause it to not operate.

Vehicle Software Updates

OnStar or GM may remotely deliver software updates or changes to the vehicle without further notice or consent. These updates or changes may enhance or maintain safety, security, or the operation of the vehicle or the vehicle systems. Software updates or changes may affect or erase data or settings that are stored in the vehicle, such as saved navigation destinations or pre-set radio stations. Neither OnStar nor GM is responsible for any affected or erased data or settings. These updates or changes may also collect personal information. Such collection is described in the OnStar Privacy Statement or separately disclosed at the time of installation. These updates

NOT FOR RESALE

or changes may also cause a system to automatically communicate with GM servers to collect information about vehicle system status, identify whether updates or changes are available, or deliver updates or changes. An active OnStar agreement constitutes consent to these software updates or changes and agreement that either OnStar or GM may remotely deliver them to the vehicle.

Connected Services Privacy Statement

The complete OnStar Privacy Statement may be found at www.onstar.com (U.S.), or www.onstar.ca (Canada). We recommend that you review it. If you have any questions, call 1-888-4ONSTAR (1-888-466-7827) or press  to speak with an OnStar Advisor. Users of wireless communications are cautioned that the privacy of any information sent via wireless cellular communications cannot be assured. Third parties may unlawfully intercept or access transmissions and private communications without consent.

OnStar – Software Acknowledgements

To obtain the source code under GPL, LGPL, MPL, and other open source licenses, that is contained in this product, please visit https://opensource.lge.com. In addition to the source code, all referred license terms, warranty disclaimers, and copyright notices are available for download. This offer is valid for a period of three years after our last shipment of this product. This offer is valid to anyone in receipt of this information.

*Provided through LG Electronics Inc., who is solely responsible for provisions of related OSS compliance.

NOT FOR RESALE

Connected Services

Connected Services
Navigation 442
Connections 442
Diagnostics 443

Vehicle Updates
How Your Vehicle is Updated 444
Vehicle Update Additional Information .. 444

Navigation

Connected navigation services enable you to use the vehicle's mobile app or an OnStar Advisor to get route guidance.

If equipped, you can send destinations from the myGMC mobile app to the Turn-by-Turn or built-in navigation system.

An active OnStar or connected services plan is required. Services vary by model. Map coverage is available in the United States (www.onstar.com) and Canada (www.onstar.ca).

Turn-by-Turn Navigation

OnStar Turn-by-Turn Navigation provides voice-guided driving directions using GPS technology.

To get directions, push the Blue OnStar button and request Turn-by-Turn directions. The OnStar Virtual Assistant will send detailed directions to the Turn-by-Turn Navigation system.

Automated voice-guided directions will take you to your set destination.

If you are in an area where Turn-by-Turn is not available, push to speak to an OnStar Advisor. The OnStar Advisor will be able to give real-time navigation instructions.

Destination Download

If equipped, OnStar can send directions to the vehicle's built-in navigation system. Press , then ask the OnStar Virtual Assistant to download directions to the built-in navigation system.

After the navigation session is downloaded, the navigation screen will provide prompts to begin driving directions.

Downloaded routes can only be canceled through the built-in navigation system.

Connections

The following services allow you to monitor your vehicle status, manage your vehicle Wi-Fi services, and safeguard your personal data.

For coverage maps, see www.onstar.com (U.S.) or www.onstar.ca (Canada).

NOT FOR RESALE

Wi-Fi Hotspot

If equipped, the built-in Wi-Fi hotspot provides 5G access to in-vehicle experiences such as navigation apps, voice assistance, audio and visual HD streaming apps in select vehicles. Multiple devices can be connected. A data plan is required.

Only use the in-vehicle controls when it is safe to do so. See *Distracted Driving* ⇨ *190*

To retrieve Wi-Fi hotspot information, select the Wi-Fi Hotspot icon on the infotainment app screen.

The Wi-Fi settings will display:

- The Wi-Fi Hotspot name (Service Set Identifier) and password.
- The connection type (no Internet connection, 4G, 4G LTE, 5G) and signal quality (poor, good, excellent), if equipped.

The connection type icon may not illuminate even though the vehicle has an active connection.

Connect with an OnStar Advisor to edit the Wi-Fi hotspot name or password. See *OnStar Overview* ⇨ *437*. On some vehicles, you can edit the Wi-Fi hotspot name and password in the Wi-Fi Hotspot menu.

After initial setup, your vehicle's Wi-Fi hotspot will connect automatically to your mobile devices.

Manage data usage by turning Wi-Fi on or off on your mobile device, using the myGMC mobile app, or by contacting an OnStar Advisor.

myGMC App

To remotely connect to your vehicle, download the myGMC mobile app to a compatible Apple or Android device. For specific app features, see my.gmc.com.

To use the app, you will need:

- An active OnStar or connected services plan.
- A compatible mobile device.
- Factory-installed remote start and power door locks.

Data rates apply.

See www.gmc.com or www.onstar.com for details and system limitations.

Security Best Practices

To protect your personal data:

- Change the default password for the myGMC mobile app. Use a combination of letters and numbers to increase the security.
- Change the Wi-Fi hotspot name (Service Set Identifier) and password. The Service Set Identifier is your network's name that is visible to other wireless devices. Choose a unique name and avoid family names or vehicle descriptions.

Diagnostics

OnStar's Vehicle Diagnostics

If equipped and enabled, OnStar's Vehicle Diagnostics monitors and reports on the health of your vehicle's central operating systems. Capabilities vary by model. See www.onstar.com (U.S.) or www.onstar.ca (Canada) for details and system limitations.

myGMC App

You can remotely check your vehicle status through the myGMC app.

NOT FOR RESALE

Features are subject to change. For updates on feature capabilities, see www.gmc.com/owners. Message and data rates may apply.

Vehicle Updates

How Your Vehicle is Updated

If equipped, the vehicle can download and install select software updates over a wireless connection. The system will prompt for certain updates to be downloaded and/or installed.

To manually check for updates, select Settings > Updates. Follow the on-screen prompts to download and/or install the update. The steps to check for, download, and install updates may vary by vehicle.

During the software download, the vehicle can be used normally. Once the download is complete, the vehicle may prompt you to install when shifting into P (Park).

During the software installation, the vehicle will be disabled and cannot be driven. The system will show the installation progress and will notify you of success or failure once the installation is complete.

Your vehicle must be connected to the internet to download Over-the-Air vehicle software updates, which can be accessed through the vehicle's built-in internet connection. If required, data plans are provided by a third party. A secure Wi-Fi hotspot such as a compatible mobile, home, or public hotspot can be used. Applicable data rates may apply.

To connect the infotainment system to a secured hotspot, select Settings > Connections > Wi-Fi Networks. Select the appropriate Wi-Fi network and follow the on-screen prompts.

Download speeds may vary. On most compatible mobile devices, activation of the Wi-Fi hotspot is in the Settings menu under Mobile Network Sharing, Personal Hotspot, Mobile Hotspot, or similar. Availability of Over-the-Air software updates varies by vehicle and country. Features are subject to change.

For more information on this feature, see *Online Account and Customer Support* ⇨ *428*.

Vehicle Update Additional Information

If you have accepted the terms and conditions and have an active connected services package for your vehicle, GM may remotely deliver software updates or changes to the vehicle without further notice or consent. These updates or changes may enhance or maintain safety, security, or the operation of the vehicle or the vehicle systems. Software updates or changes may affect or erase data or settings that are stored in the vehicle, such as saved navigation destinations or pre-set radio stations. GM is not responsible for any affected or erased data or settings. These updates or changes may also collect personal information. Such collection is described in the privacy statement or separately disclosed at the time of installation. These updates or changes may also cause a system to automatically communicate with GM servers to collect information about vehicle system status, identify whether updates or changes are available, or deliver updates or changes. An active connectivity agreement constitutes consent to these software updates or changes and agreement that GM may remotely deliver them to the vehicle.

NOT FOR RESALE

Data Download

If the vehicle is equipped with and has an active connected services plan, additional data may be collected through the connected services system. This includes information about: the vehicle's operation, a crash involving the vehicle, the use of the vehicle and its features, and, in certain situations, the location and approximate GPS speed of the vehicle. Refer to the Terms and Conditions and Privacy Statement on the website. See www.gmc.com.

Wireless Configuration

Export of this vehicle to another region may require reset of internal settings for wireless communication configuration to ensure regulatory compliance or enable connectivity. See your dealer. The end-user of the device does not have an option to modify the regulatory wireless configuration.

NOT FOR RESALE

Index

A

Accessories and Modifications..... 321
Accessory Power..... 214
Active
  Fuel Management..... 214
Adaptive
  Cruise Control..... 130, 240
Adding a Snow Plow or Similar
  Equipment..... 317
Additional
  OnStar Information..... 438
Add-On Electrical Equipment..... 316
Advanced
  Driver Assistance Systems..... 276
Agreements
  Trademarks and License..... 177
Aiming
  Headlight, Front..... 355
Air
  Cleaner/Filter, Engine..... 334, 335
  Filter Life System..... 334
  Filter, Passenger Compartment..... 185
  Vents..... 185
Airbags
  Adding Equipment to the Vehicle..... 73
  How Does an Airbag Restrain?..... 67
  Passenger Sensing System..... 69
  Passenger Status Indicator..... 118
  Readiness Light..... 118
  Replacing System Parts after a Crash..... 74
  Servicing Airbag-Equipped Vehicles..... 72
  System..... 64
  System Check..... 73
  What Makes an Airbag Inflate?..... 67
  What Will You See after an Airbag
  Inflates?..... 68
  When Should an Airbag Inflate?..... 66
  Where Are the Airbags?..... 65
Alarm
  Vehicle Security..... 33
Alert
  Blind Zone Steering Assist (BZSA)..... 298
  Lane Change (LCA)..... 295
  Rear Cross Traffic..... 285
  Rear Pedestrian..... 284
All-Season Tires..... 365
All-Terrain Tires..... 365
Ambient Lighting..... 147
AM-FM Radio..... 153
Anchor Points
  Cargo..... 102
Antenna
  Multi-band..... 155
Antilock Brake System (ABS)..... 229
  Warning Light..... 123

NOT FOR RESALE

Appearance Care
Exterior... 400
Interior... 405
Apple CarPlay and Android Auto... 170
Apps
Off-Road... 196
Assistance
Program, Roadside... 429
Assistance Systems
Advanced... 276
Automatic Emergency Braking (AEB)... 289
Blind Zone Steering (BZSA)... 298
Driver Attention... 300
Driving... 286
Forward Collision Alert (FCA) System... 287
Front Pedestrian Braking (FPB)... 292
Lane Change Alert (LCA)... 295
Lane Keep Assist (LKA)... 301
Parking... 282
Parking and Backing... 277
Rear Cross Traffic Alert (RCTA)... 285
Rear Pedestrian Alert... 284
Rear Vision Camera (RVC)... 277
Reverse Automatic Braking (RAB)... 283
Surround Vision Recorder... 303
Surround Vision System... 278
Traffic Sign... 298
Assistant, Voice... 163
Audio
Bluetooth... 156
Automatic
Climate Control System... 180
Dimming Mirrors... 38
Door Locks... 21
Emergency Braking (AEB) Disabled Light... 125
Transmission... 222
Transmission Fluid... 333
Automatic Transmission
Manual Mode... 225
Auxiliary
Switches... 317
Avoiding Untrusted Media Devices... 155
Axle
Front... 353
Locking Front... 239
Rear... 353

B

Battery
Exterior Lighting Battery Saver... 148
Jump Starting... 393
Load Management... 147
Power Protection... 148
Battery - North America... 350
Biodiesel... 307
Blade Replacement, Wiper... 353
Bluetooth
Audio... 156
Overview... 165, 166
Brake
Pad Life System... 348
Brakes... 347
Antilock... 229
Brake Assist... 231
Electric Brake Boost... 229
Electric Parking Brake... 229
Exhaust Brake... 231
Fluid... 349
System Warning Light... 122
Braking... 191
Automatic Emergency (AEB)... 289
Front Pedestrian (FPB) System... 292
Post-Collision... 231
Reverse Automatic... 283
Break-In, New Vehicle... 207
Buckle To Drive... 57
Buying New Tires... 378

C

Calibration
Compass... 108
California
Perchlorate Materials Requirements... 321
Proposition 65 Warning... 1
Warranty Information... 426

NOT FOR RESALE

Camera
Rear Vision (RVC)... 277
Canadian Vehicle Owners... 2
Capacities and Specifications... 420
Carbon Monoxide
Engine Exhaust... 215
Tailgate... 24
Winter Driving... 199
Cargo
Anchor Points... 102
Lights, Exterior... 145
Caution, Danger, and Warning... 2
Center
Console, Storage... 101
Seat... 48
Chains and Other Traction Devices
Tire... 382
Charging
System Light... 119
Charging Phone
Wireless... 109
Child Restraints
Infants and Young Children... 76
Lower Anchors and Tethers for Children... 81
Older Children... 74
Securing... 92, 95, 96
Systems... 78
Where to Put... 80
Child Safety Locks... 22
Circuit Breakers... 357
Cleaning
Exterior Care... 400
Interior Care... 405
Climate Control Systems
Automatic... 180
Dual Automatic... 183
Clock... 108
Setting... 171
Cluster, Instrument... 112
Cold Weather Operation... 308
Collision Alert
Forward (FCA) System... 287
Collision Damage Repair... 432
Compartments
Storage... 99
Compass... 108
Connected Services
Connections... 442
Diagnostics... 443
Navigation... 442
Connections
Connected Services... 442
Control
Hill Descent... 233
Hill Descent, Light... 124
of a Vehicle... 191
Traction and Electronic Stability... 232
Controls
Headlight... 140
Steering Wheel... 151
Convex Mirrors... 35
Coolant
Engine Temperature Gauge... 115
Engine Temperature Warning Light... 126
Cooling System... 337, 340
Cornering Lights... 144
Courtesy Transportation Program... 431
Cruise Control
Adaptive... 240
Light... 130
Super... 263
Cupholders... 100
Customer Assistance
Offices... 428
Text Telephone (TTY) Users... 428
Customer Information
Publications Ordering Information... 433
Customer Satisfaction Procedure... 424
Customer Support
and Online Account... 428
Cybersecurity... 435

D

Damage Repair, Collision... 432
Danger, Warning, and Caution... 2
Dashboard... 5

NOT FOR RESALE

Data Collection
Infotainment System... 436
OnStar... 436
Data Recorders, Event... 436
Daytime Running Lights... 142
Defensive Driving... 190
Delayed
Locking... 21
Destination... 161
Diagnostics
Connected Services... 443
Diesel
Exhaust Fluid... 218
Exhaust Fluid (DEF) Warning Light... 129
Diesel Particulate Filter... 216
Digital
Key... 22
Disabled Vehicle
Transporting... 396
Disclosures... 434
Distracted Driving... 190
Dome Lights... 146
Door
Ajar Light... 131
Delayed Locking... 21
Locks... 20
Power Locks... 21
Drive Belt Routing, Engine... 423
Driver
Assistance Systems, Advanced... 276
Attention Assist... 300
Information Center (DIC)... 131
Mode Control... 234
Mode Control Light... 127
Teen... 174
Drive Systems
Four-Wheel Drive... 352
Driving
Assistance Systems... 286
Defensive... 190
for Better Fuel Economy... 189
Hill and Mountain Roads... 198
If the Vehicle is Stuck... 200
Impaired... 190
Loss of Control... 192
Off-Road... 193
Off-Road Recovery... 192
Vehicle Load Limits... 201
Wet Roads... 197
Winter... 199
Dual
Automatic Climate Control System... 183

E

Electric
Brake Boost... 229
Parking Brake... 229
Parking Brake Light... 122
Electrical
Equipment, Add-On... 316
Electrical System
Engine Compartment Fuse Block... 357
Fuses and Circuit Breakers... 357
Instrument Panel Fuse Block... 362
Overload... 355
Electronic Stability Control (ESC) Off
Light... 126
Emergency
OnStar... 438
Engine
Air Cleaner/Filter... 334, 335
Air Filter Life System... 334
Check Light (Malfunction
Indicator)... 119, 121
Compartment Overview... 324
Coolant Temperature Gauge... 115
Coolant Temperature Warning Light... 126
Cooling System... 337, 340
Drive Belt Routing... 423
Exhaust... 215
Fan... 346
Heater... 213
Oil Life System... 333
Oil Pressure Gauge... 114
Oil Pressure Light... 128

NOT FOR RESALE

Oil Temperature Gauge..... 115
Overheated Protection Operating Mode..... 346
Overheating..... 344, 345
Power Messages..... 136
Running While Parked..... 215
Starting..... 209, 210
Entry Lighting..... 146
Event Data Recorders..... 436
Exhaust
Diesel Fluid..... 218
Exhaust Brake..... 231
Exit Lighting..... 147
Extended Mirrors..... 35
Extended Parking..... 214, 215
Extender, Seat Belt..... 63
Exterior
Lighting Battery Saver..... 148

F

Fan
Engine..... 346
Filter..... 216
Engine Air Cleaner..... 334, 335
Replacement (Fuel)..... 311
Flashers, Hazard Warning..... 143
Flat Tire..... 382
Changing..... 383
Floor Console
Storage..... 102
Floor Mats..... 408
Fluid
Automatic Transmission..... 333
Brakes..... 349
Washer..... 347
Fog
Lights..... 130
Lights, Front..... 144
Folding Mirrors..... 37
Four-Wheel Drive..... 226, 352
Light..... 123
Frequency Statement
Radio..... 434
Front
Axle..... 353
Locking Axle..... 239
Seats, Adjustment..... 47
Fuel
Recommended..... 304, 305
Additives..... 307
Biodiesel..... 307
Cold Weather Operation..... 308
Economy, Driving for Better..... 189
Filling a Portable Fuel Container..... 315
Filling the Tank..... 312, 314
Filter Replacement..... 311
Foreign Countries..... 307
Gauge..... 114
Low Fuel Warning Light..... 129
Management, Active..... 214
Prohibited Fuels..... 306
Running out of Fuel..... 311
Top Tier..... 303, 304
Water in Fuel..... 308
Full-Size Spare Tire..... 392
Fuses
Engine Compartment Fuse Block..... 357
Fuses and Circuit Breakers..... 357
Instrument Panel Fuse Block..... 362

G

Garage Door Opener
Programming..... 136
Gas Strut(s)..... 354
Gauges
Engine Coolant Temperature..... 115
Engine Oil Pressure..... 114
Engine Oil Temperature..... 115
Fuel..... 114
Odometer..... 113
Speedometer..... 113
Tachometer..... 114
Transmission Temperature..... 116
Trip Odometer..... 113
Voltmeter..... 116
Warning Lights and Indicators..... 111

NOT FOR RESALE

General Information
Service and Maintenance 411
Towing 316
Vehicle Care 321
Glass Replacement 354
Global Positioning System (GPS) 162
Glove Box 99
GM Mobility Reimbursement Program 429
Guidance
Problems with the Route 162

H

Hands-On Steering Assist 252
Hands-On Steering Assist Light 124
Hazard Warning Flashers 143
Headlights
Aiming, Front 355
Controls 140
High-Beam On Light 129
Off Reminder 142
System, Automatic 142
Head Restraints 46
Head-Up Display (HUD) 134
Heated
and Ventilated Front Seats 54
Mirrors 37
Rear Seats 56
Steering Wheel 106
Heater
Engine 213
High-Beam
On Light 129
Systems 140
High-Speed Operation 371
Hill
and Mountain Roads 198
Descent Control (HDC) 233
Descent Control Light 124
Start Assist (HSA) 231
Hood 322
Horn 107
How to Wear Seat Belts Properly 58
How Your Vehicle is Updated 444

I

If a Crash Occurs 432
Ignition Positions 208
Immobilizer Operation 34
Indicators
Pedestrian Ahead 125
Vehicle Ahead 125
Warning Lights and Gauges 111
Infants and Young Children, Restraints 76
Information
Publication Ordering 433
Infotainment
Passenger 156
Using the System 151
Inspection
Multi-Point Vehicle 415
Instrument
Cluster 112
Instrument Panel
Storage Area 99
Instrument Panel Overview 5
Interior
Rearview Mirrors 38
Introduction 2, 149

J

Jump
Starting 393

K

Keys 13
Digital 22
Remote 14
Remote Operation 14

L

Labeling, Tire Sidewall 365
Lane
Keep Assist Light 124
Lap-Shoulder Belt 60

NOT FOR RESALE

LATCH System
Replacing Parts after a Crash... 92
LED Lighting... 355
Lighting
Ambient... 147
Entry... 146
Exit... 147
Illumination Control... 145
LED... 355
Task... 144
Lights
Adaptive Cruise Control... 130
Airbag Readiness... 118
Antilock Brake System (ABS) Warning... 123
Automatic Emergency Braking (AEB) Disabled... 125
Brake System Warning... 122
Charging System... 119
Cornering... 144
Cruise Control Light... 130
Daytime Running... 142
Diesel Exhaust Fluid (DEF) Warning Light... 129
Dome... 146
Door Ajar... 131
Driver Mode Control... 127
Electric Parking Brake... 122
Electronic Stability Control (ESC), Off... 126
Engine Coolant Temperature Warning... 126
Engine Oil Pressure... 128
Exterior Cargo... 145
Exterior Lighting Battery Saver... 148
Four-Wheel-Drive... 123
Front Fog... 144
Front Fog Indicator... 130
Gauges and Indicators... 111
Hands-On Steering Assist... 124
High-Beam On... 129
Hill Descent Control... 124
Lane Keep Assist... 124
Low Fuel Warning... 129
Malfunction Indicator (Check Engine)... 119, 121
On Reminder... 130
Reading... 146
Seat Belt Reminders... 116
Security... 129
Service Electric Parking Brake... 123
Super Cruise... 131
Tire Pressure... 128
Traction Control System (TCS)/ Electronic Stability Control Light... 125
Traction Off... 125
Wait to Start... 128
Locking
Front Axle... 239
Rear Axle... 238
Locks
Automatic Door... 21
Delayed Locking... 21
Door... 20
Lockout Protection... 22
Power Door... 21
Safety... 22
Steering Column... 34
Loss of Control... 192
Lower Anchors and Tethers for Children (LATCH System)... 81
Low Fuel Warning Light... 129
Lumbar Adjustment
Front Seats... 50

M

Maintenance
Recommended Fluids and Lubricants... 416
Records... 418
Schedule... 412
Manual
Mode... 225
Maps... 160
Massage
Seats... 51

NOT FOR RESALE

Media
Avoiding Untrusted Devices 155
Memory Seats 51
Messages
Engine Power 136
Vehicle 135
Vehicle Speed 136
Mirrors
Automatic Dimming 38
Automatic Dimming Rearview 38
Convex 35
Folding 37
Heated 37
Interior Rearview 38
Manual Rearview 38
Power 36
Rear Camera 38
Tilt in Reverse 38
Trailer Tow 35
Modes
Driver Control 234
Monitor System, Tire Pressure 372
Multi-band Antenna 155
Multi-Point Vehicle Inspection (MPVI) 415

N

Navigation
Connected Services 442
Destination 161
Symbols 160
Using the System 159
New Vehicle Break-In 207

O

Odometer 113
Trip 113
Off-Road
App 196
Driving 193
Recovery 192
Oil
Engine 329, 331
Engine Oil Life System 333
Engine Oil Pressure Gauge 114
Pressure Light 128
Older Children, Restraints 74
Online Account and Customer Support 428
OnStar 436
Additional Information 438
Emergency 438
Overview 437
Security 438
Operating Mode
Overheated Engine Protection 346
Outlets
Power 108
Overheated Engine Protection
Operating Mode 346
Overheating, Engine 344, 345
Overview 150
Instrument Panel 5

P

Park
Assist 277, 282
Parking
Brake and P (Park) Mechanism Check 353
Extended 214, 215
Over Things That Burn 214
Parking or Backing
Assistance Systems 277
Passenger
Airbag Status Indicator 118
Compartment Air Filter 185
Infotainment 156
Sensing System 69
Pedestrian
Ahead Indicator 125
Perchlorate Materials Requirements, California 321
Phone
Apple CarPlay and Android Auto 170
Bluetooth 165, 166
Pickup Conversion to Chassis Cab 319
Port
USB 155
Post-Collision Braking 231

NOT FOR RESALE

Power
Assist Steps... 32
Door Locks... 21
Mirrors... 36
Outlets... 108
Protection, Battery... 148
Retained Accessory (RAP)... 214
Seat Adjustment... 48
Windows... 41
Pregnancy, Using Seat Belts... 62
Privacy
Vehicle Data Recording... 435
Problems with Route Guidance... 162
Program
Courtesy Transportation... 431
Prohibited Fuels... 306
Proposition 65 Warning
California... 1
Publication Ordering Information... 433

Q

Québec Consumer Protection Act Disclosure
(Québec Customers Only)... 2

R

Radiator... 337, 340
Radio
AM-FM Radio... 153
Frequency Statement... 434
Reception... 155
Satellite... 154
Reading Lights... 146
Rear
Axle... 353
Camera Mirror... 38
Heated Seats... 56
Locking Axle... 238
Seat Reminder... 55
Seats... 55
Windows... 42
Rearview Mirrors... 38
Automatic Dimming... 38
Reclining Seatbacks... 49
Recommended
Fluids and Lubricants... 416
Fuel... 304, 305
Recorder
Surround Vision... 303
Records
Maintenance... 418
Recreational Vehicle Towing... 397
Reimbursement Program, GM Mobility... 429
Reminder
Headlights Off... 142
Lights On... 130
Seat Belt... 116
Remote
Key... 14
Key Operation... 14
Start... 19
Replacement
Glass... 354
Replacement Parts
Airbags... 74
Replacing
Airbag System... 74
LATCH System Parts After a Crash... 92
Seat Belt System Parts after a Crash... 64
Reporting Safety Defects
Canadian Government... 435
General Motors... 435
U.S. Government... 434
Retained Accessory Power (RAP)... 214
Reverse Tilt Mirrors... 38
Roads
Driving, Wet... 197
Roadside Assistance Program... 429
Roof
Sunroof... 43
Rotation
Tires... 376
Routing, Engine Drive Belt... 423
Running Boards... 32
Running out of Fuel... 311
Running the Vehicle While Parked... 215

NOT FOR RESALE

S

Safety
- Locks... 22
- System Check... 63

Safety Defects Reporting
- Canadian Government... 435
- General Motors... 435
- U.S. Government... 434

Satellite Radio... 154
Scheduling Appointments... 431
Seat Belts... 56
- Buckle To Drive... 57
- Care... 63
- Extender... 63
- How to Wear Seat Belts Properly... 58
- Lap-Shoulder Belt... 60
- Reminders... 116
- Replacing after a Crash... 64
- Use During Pregnancy... 62

Seats
- Adjustment, Front... 47
- Center Seat... 48
- Head Restraints... 46
- Heated and Ventilated, Front... 54
- Heated, Rear... 56
- Lumbar Adjustment, Front... 50
- Massage... 51
- Memory... 51
- Power Adjustment, Front... 48
- Rear... 55
- Rear Seat Reminder... 55
- Reclining Seatbacks... 49
- Underseat Storage... 100

Secondary Collision Mitigation Braking... 231
Securing Child Restraints... 92, 95, 96
Security
- Light... 129
- OnStar... 438
- Vehicle... 33
- Vehicle Alarm... 33

Service... 186
- Maintenance Records... 418
- Accessories and Modifications... 321
- Doing Your Own Work... 321
- Electric Parking Brake Light... 123
- Maintenance, General Information... 411
- Parts Identification... 419
- Scheduling Appointments... 431

Services
- Special Application... 416

Servicing the Airbag System... 72
Settings... 171
Signals, Turn and Lane-Change... 143
Snow Plow... 317
Special Application Services... 416
Specifications and Capacities... 420
Speedometer... 113

Start
- Assist, Hill... 231
- Remote... 19

Starting the Engine... 209, 210
Status
- Vehicle... 131

Steering... 191
- Hands-On Assist... 252
- Heated Wheel... 106
- Wheel Adjustment... 106
- Wheel Controls... 151

Steps
- Power Assist... 32

Stop/Start System... 211
Storage
- Center Console... 101
- Compartments... 99
- Cupholders... 100
- Floor Console... 102
- Glove Box... 99
- Instrument Panel Areas... 99
- Underseat... 100

Struts
- Gas... 354

Stuck Vehicle... 200
Sunroof... 43
Sun Visors... 42
Super Cruise... 263
- Light... 131

NOT FOR RESALE

Surround
Vision System... 278
Switches
Auxiliary... 317
Symbols... 3
Navigation... 160
System
Brake Pad Life... 348
Engine Air Filter Life... 334
Global Positioning... 162
Systems
Airbag... 64
High Beam... 140
Infotainment, Data Recording... 436

T

Tachometer... 114
Tailgate... 24
Task Lighting... 144
Teen Driver... 174
Text Telephone (TTY) Users... 428
Theft-Deterrent Systems... 34
Tires... 364
All-Season... 365
All-Terrain... 365
Buying New Tires... 378
Chains and Other Traction Devices... 382
Changing... 383
Designations... 367
Different Size... 379
Full-Size Spare... 392
If a Tire Goes Flat... 382
Inspection... 376
Pressure... 370, 371
Pressure Light... 128
Pressure Monitor Operation... 372
Pressure Monitor System... 372
Rotation... 376
Sidewall Labeling... 365
Terminology and Definitions... 369
Uniform Tire Quality Grading... 380
Wheel Alignment and Tire Balance... 381
Wheel Replacement... 381
When It Is Time for New Tires... 377
Winter... 365
Top Tier Fuel... 303, 304
Towing
General Information... 316
Recreational Vehicle... 397
Traction
Control System (TCS)/Electronic Stability Control Light... 125
Control/Electronic Stability Control... 232
Off Light... 125
Trademarks and License Agreements... 177
Traffic
Sign Assistant... 298
Trailer
Tow Mirrors... 35
Transfer Case
Four-Wheel Drive... 226
Transmission
Automatic... 222
Fluid, Automatic... 333
Temperature Gauge... 116
Transportation Program, Courtesy... 431
Transporting
a Disabled Vehicle... 396
Items That Can Catch Fire... 32
Trip Odometer... 113
Truck-Camper Loading Information... 206
TTY Users
Customer Assistance... 428
Turn and Lane-Change Signals... 143

U

Uniform Tire Quality Grading... 380
Universal Remote System
Operation... 138
Programming... 136
Updates
How Your Vehicle is Updated... 444
Vehicle Update Additional Information... 444
USB Port... 155

NOT FOR RESALE

Using
Infotainment System 151
Navigation System 159

V

Vehicle
Ahead Indicator 125
Alarm System 33
Canadian Owners 2
Control 191
Data Recording and Privacy 435
Identification Number (VIN) 419
Load Limits 201
Messages 135
Positioning 162
Security 33
Speed Messages 136
Status 131
Symbols 3
Vehicle Care
Tire Pressure 370
Vehicle Security
Steering Column Lock 34
Vehicle Update
Additional Information 444
Ventilation, Air 185
Visors 42
Voice
Assistant 163
Voltmeter Gauge 116

W

Wait to Start Light 128
Warning
Brake System Light 122
Caution and Danger 2
Hazard Flashers 143
Lights, Gauges, and Indicators 111
Warranty Information
California 426
Washer Fluid 347
Water in Fuel 308
Wheels
Alignment and Tire Balance 381
Different Size 379
Replacement 381
Where to Put the Restraint 80
Windows 40
Power 41
Rear 42
Windshield
Replacement 354
Wiper/Washer 107
Winter
Driving 199
Tires 365
Wiper
Blade Replacement 353
Wireless Phone Charging 109

Scan to Access

Owner's Manuals
Warranty Information
Reference Guides
Links to GM Brand Websites
Many Additional Resources

United States

Canada

Connected Services
1-888-4-ONSTAR

MIX
Paper | Supporting responsible forestry
Papier | Pour une gestion forestière responsable
Papel | Apoyando la silvicultura responsable
FSC® C132124
FSC
www.fsc.org

85865404 A