
CHEVROLET
2027
Traverse
Trailer Towing
Supplement

Contents

Trailer Towing 1

Index 15

Trailer Towing

General Towing Information

Warning

You can lose control when towing a trailer if the correct equipment is not used or the vehicle is not driven properly. For example, if the trailer is too heavy or the trailer brakes are inadequate for the load, the vehicle may not stop as expected. You and others could be seriously injured. The vehicle may also be damaged, and the repairs would not be covered by the vehicle warranty. Pull a trailer only if all the steps in the Trailer Towing Supplement have been followed. Ask your dealer for advice and information about towing a trailer with the vehicle.

To tow a disabled vehicle, see your owner's manual.

Driving Characteristics and Towing Tips

Driving with a Trailer

Warning

To prevent serious injury or death from carbon monoxide (CO), when towing a trailer:

- Do not drive with the liftgate, trunk/hatch, or rear-most window open.
- Fully open the air outlets on or under the instrument panel.
- Adjust the climate control system to a setting that brings in only outside air. See “Climate Control Systems” in the Index.

For more information about carbon monoxide, see your owner's manual.

Trailering is different than driving the vehicle by itself. Trailering affects handling, acceleration, braking, and durability. The combination of the vehicle and trailer is longer

©2026 General Motors LLC. All Rights Reserved.

and not as responsive as the vehicle itself. Successful and safe trailering requires proper use of the correct equipment.

Become familiar with handling and braking by driving on a level road surface before driving on public roads.

The trailer structure, tires, and brakes must all be rated to carry the intended cargo. Inadequate trailer equipment can cause the combination to operate in an unexpected or unsafe manner.

Before towing a trailer:

- Follow all state and local laws that apply to trailer towing. These requirements vary from state to state.
- Install extended side view mirrors on your vehicle if your visibility is limited or restricted while towing. State laws may require the use of extended side view mirrors.
- Inspect all trailer hitch parts and attachments, safety chains, electrical connectors, lights, tires, and mirrors. See *Towing Equipment* ⇨ *9*.
- If the trailer has electric brakes, start the combination moving and then manually apply the trailer brake controller to check that the trailer brakes work.
- Do not tow a trailer during the first 800 km (500 mi) of vehicle use to prevent damage to the vehicle.
- Perform the first oil change before heavy towing.

When towing a trailer:

- Do not drive over 80 km/h (50 mph) and do not make starts at full acceleration during the first 800 km (500 mi) of trailer towing.
- If equipped, turn off the following driver assistance features when towing a trailer. These features may turn off automatically when a trailer is detected:
  - Park Assist
  - Automatic Parking Assist
  - Reverse Automatic Braking
  - Rear Cross Traffic Alert
  - Rear Cross Traffic Braking
  - Lane Change Alert
  - Super Cruise and Adaptive Cruise Control, unless equipped with trailering functionality. See your owner's manual.
- Tow in D (Drive). If equipped, use Tow/Haul mode for heavier trailers. See your owner's manual. If the transmission downshifts too often, use Manual mode to select a lower gear. Seeyour owner's manual.
- Check that the cargo and trailer are secure and that the lights and any trailer brakes are working.

Automatic Emergency Braking and Front Pedestrian Braking should be set to Alert unless equipped with Super Cruise.

Towing with a Stability Control System

You might hear the StabiliTrak/Electronic Stability Control system when towing. The system reacts to vehicle movement caused by the trailer, which mainly occurs during cornering. This is normal when towing heavier trailers.

Following Distance

Stay at least twice as far behind the vehicle ahead as you would when driving without a trailer to help avoid heavy braking and sudden turns.

Passing

You need more passing distance when towing a trailer. You must drive much farther beyond the passed vehicle before returning to the lane. Pass on level roadways. Avoid passing on hills, if possible.

Backing Up

Hold the bottom of the steering wheel with one hand. To move the trailer to the left, move that hand to the left. To move the trailer to the right, move that hand to the right. Always back up slowly, and if possible, have someone guide you.

Making Turns

Caution

Turn more slowly and make wider arcs when towing a trailer to prevent damage to your vehicle. Making very sharp turns could cause the trailer to contact the vehicle.

Make wide turns when towing to prevent the trailer from crossing over soft shoulders or curbs, or striking road signs, trees, or other objects. Always signal turns well in advance. Do not steer or brake suddenly.

Towing on Grades

Reduce speed and shift to a lower gear before descending a long or steep downhill grade. If the transmission is not downshifted, the brakes may overheat, resulting in reduced braking efficiency.

Tow in D (Drive). If the transmission shifts too often under heavy loads and/or hilly conditions, shift the transmission to a lower gear, or use Tow/Haul mode, if equipped.

At higher altitudes, coolant boils at lower temperatures. If you turn off your vehicle immediately after towing at a high altitude on steep uphill grades, the vehicle may show signs of overheating. To avoid this, let the vehicle run, preferably on level ground, with the transmission in P (Park) for a few minutes before turning the vehicle off.

Parking on Hills

⚠ Warning

To prevent serious injury or death, always park your vehicle and trailer on a level surface when possible.

When parking your vehicle and trailer on a hill:

1. Press and hold the brake pedal, but do not shift into P (Park) yet. Turn the wheels toward the curb if you are facing downhill or into traffic if you are facing uphill.
2. Have someone place chocks under the trailer wheels.
3. When the wheel chocks are in place, gradually release the brake pedal to allow the chocks to support the load of the trailer.
4. Reapply the brake pedal. Then, apply the Electric Parking Brake and shift into P (Park).
5. Release the brake pedal.

Leaving After Parking on a Hill

1. Apply and hold the brake pedal.
2. Start the vehicle.
3. Shift into the desired gear.
4. Release the parking brake.
5. Remove your foot from the brake pedal.
6. Drive slowly until the trailer is clear of the chocks.
7. Stop and have someone pick up and store the chocks.

Launching and Retrieving a Boat

Backing the Trailer into the Water

⚠ Warning

- Have all passengers get out of the vehicle before backing onto the sloped part of the ramp. Lower the driver and passenger side windows before backing onto the ramp. This will provide a means of escape in the unlikely event the vehicle slides into the water.

(Continued)

Warning (Continued)

- If the boat launch surface is slippery, have the driver remain in the vehicle with the brake pedal applied while the boat is being launched. The boat launch can be especially slippery at low tide when part of the ramp was previously submerged at high tide. Do not back onto the ramp to launch the boat if you are not sure the vehicle can maintain traction.
- Do not move the vehicle if someone is in the path of the trailer. Some parts of the trailer might be underwater and not visible to people who are assisting in launching the boat.

Caution

If the vehicle tires begin to spin and the vehicle begins to slide toward the water, remove your foot from the accelerator pedal and apply the brake pedal. Seek help to have the vehicle towed up the ramp.

Caution

If your trailer electrical circuits are not waterproof, to avoid damage, disconnect the trailer wiring before backing the trailer into water. Reconnect the wiring after removing the trailer from the water.

If the trailer has electric brakes that can function when the trailer is submerged, leave the electrical trailer connector attached to maintain trailer brake functionality while on the boat ramp.

To Back the Trailer Into the Water

1. Slowly back down the ramp until the boat is floating. Do not back down the ramp further than necessary.
2. Press and hold the brake pedal, but do not shift into P (Park).
3. Have someone place chocks under the front wheels of the vehicle.
4. Gradually release the brake pedal to allow the chocks to support the load of the trailer.
5. Reapply the brake pedal. Then, apply the parking brake and shift into P (Park).

6. Release the brake pedal.

Pulling the Trailer from the Water

1. Press and hold the brake pedal.
2. Start the vehicle and shift into D (Drive).
3. Release the parking brake.
4. Let up on the brake pedal.
5. Drive slowly until the tires are clear of the chocks.
6. Stop and have someone pick up and store the chocks.
7. Slowly pull the trailer from the water.

Maintenance When Trailer Towing

A vehicle used to tow trailers requires service more often. See your owner's manual.

It is especially important to check the automatic transmission fluid, engine oil, axle lubricant, belts, cooling system, and brake system before and during each trip.

Check periodically that all nuts and bolts on the trailer hitch are tight.

Engine Cooling When Trailer Towing

The cooling system may temporarily overheat during severe operating conditions. See your owner's manual.

Trailer Towing

Trailer Weight

⚠ Warning

You and others could be seriously injured or killed if the trailer is too heavy or the trailer brakes are inadequate for the load. The vehicle may be damaged, and the repairs would not be covered by the vehicle warranty.

Only tow a trailer if all the steps in this section have been followed. Ask your dealer for advice and information about towing a trailer.

Safe trailering requires monitoring the weight, speed, altitude, road grades, outside temperature, and how frequently the vehicle is used to tow a trailer.

Trailer Weight Ratings

When towing a trailer, the combined weight of the vehicle, vehicle contents, trailer, and trailer contents must be below all the maximum weight ratings for the vehicle, including:

- Gross Combined Weight Rating
- Gross Vehicle Weight Rating
- Maximum Trailer Weight Rating
- Gross Axle Weight Rating-Rear
- Maximum Trailer Tongue Weight Rating

See “Weight-Distributing Hitch and Adjustment” under *Towing Equipment* ⇨ *9* to determine if equalizer bars are required to obtain the maximum trailer weight rating.

See “Trailer Brakes” under *Towing Equipment* ⇨ *9* to determine if brakes are required based on your trailer's weight.

The only way to be sure the weight ratings are not exceeded is to verify with a scale.

Gross Combined Weight Rating

Gross Combined Weight Rating is the total allowable weight of the completely loaded vehicle and trailer including any fuel, passengers, cargo, equipment, and accessories.

The Gross Combined Weight Rating for the vehicle in is the Tow Rating Chart following.

To confirm the Gross Combined Weight Rating, load the vehicle and trailer for the trip with passengers and cargo, then weigh the vehicle and trailer on a public scale.

To calculate the Gross Combined Weight Rating with the individual weights:

1. Start with the "curb weight."
2. Add the weight of the trailer loaded with cargo and ready for the trip.
3. Add the weight of all passengers.
4. Add the weight of all cargo in the vehicle.
5. Add the weight of hitch hardware such as a draw bar, ball, load equalizer bars, or sway bars.
6. Add the weight of any accessories or aftermarket equipment added to the vehicle.

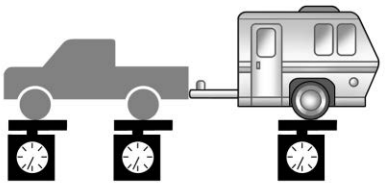

Gross Vehicle Weight Rating

For information about the vehicle's maximum load capacity, see your owner's manual. When calculating the Gross Vehicle Weight Rating with a trailer attached, include the trailer tongue weight as part of the weight the vehicle is carrying.

Maximum Trailer Weight

The Maximum Trailer Weight Rating is calculated assuming the tow vehicle has a driver, a front seat passenger, and all required trailering equipment. The Maximum Trailer Weight Rating represents the heaviest trailer the vehicle can tow, but it may be necessary to reduce the trailer weight to stay within the Gross Combined Weight Rating, Gross Vehicle Weight Rating, maximum trailer tongue load, or Gross Axle Weight Rating-Rear. This is especially true for heavier vehicles with high option content.

Use the tow rating chart to determine how much the trailer can weigh, based on the vehicle model, powertrain, and trailering options.

Vehicle	Maximum Trailer Weight (Max Towing Capacity)	Gross Combined Mass/ Weight Rating (GCMR/GCWR)	Maximum Tongue Weight
Front-Wheel Drive	680 kg (1,500 lb)	3 050 kg (6,720 lb)	68 kg (150 lb)
Front-Wheel Drive, V92 Trailer Towing Package	2 268 kg (5,000 lb)	4 650 kg (10,250 lb)	227 kg (500 lb)
All-Wheel Drive	680 kg (1,500 lb)	3 200 kg (7,050 lb)	68 kg (150 lb)
All-Wheel Drive, V92 Trailer Towing Package	2 268 kg (5,000 lb)	4 750 kg (10,470 lb)	227 kg (500 lb)

Rear Gross Axle Weight Rating

The Rear Gross Axle Weight Rating is the total weight the vehicle's rear axle can support. Do not exceed the Rear Gross Axle Weight Rating for the vehicle with the tow vehicle and trailer fully loaded for the trip, including the weight of the trailer tongue. If using a weight-distributing hitch, do not exceed the Rear Gross Axle Weight Rating before applying the weight distribution spring bars.

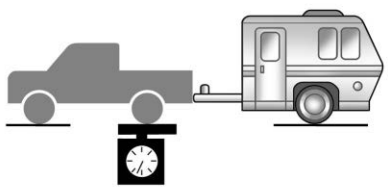

For additional assistance with trailering or additional information, see your dealer.

Maximum Trailer Tongue Weight Rating

The Maximum Trailer Tongue Weight Rating is the allowable trailer tongue weight that the vehicle can support using a conventional trailer hitch. It may be necessary to reduce the overall trailer weight to stay within the maximum trailer tongue weight rating while still maintaining the correct trailer load balance.

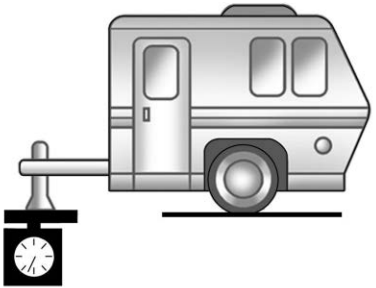

The trailer tongue weight contributes to the Gross Vehicle Weight. The Gross Vehicle Weight includes the curb weight of your vehicle, any passengers, cargo, equipment and the trailer tongue weight. Vehicle options, passengers, cargo, and equipment reduce the maximum allowable tongue weight the vehicle can carry, which also reduces the maximum allowable trailer weight.

After loading the trailer, separately weigh the trailer and trailer tongue. Calculate the trailer load balance percentage to see if the weights and distribution are appropriate for your vehicle. If the trailer weight is too high, it may be possible to transfer some of the cargo into your vehicle. If the trailer tongue weight is too high or too low, it may be possible to rearrange some of the cargo inside of the trailer.

Do not exceed the maximum allowable tongue weight for your vehicle. Use the shortest hitch extension available to position the hitch ball closer to your vehicle. This will help reduce the effect of the trailer tongue weight on the trailer hitch and the rear axle.

Trailer Load Balance

The correct trailer load balance must be maintained to ensure trailer stability. Incorrect load balance is a leading cause of trailer sway.

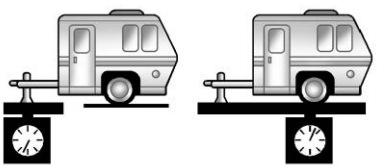

1 2

The trailer tongue weight (1) should be 10–15% of the total loaded trailer weight (2). Some specific trailer types, such as boat trailers, fall outside of this range. See the trailer owner's manual for the recommended trailer tongue weight for each trailer. Never exceed the maximum loads for your vehicle, hitch and trailer.

To calculate the trailer load balance percentage, divide weight (1) by weight (2) times 100.

If you use a cargo carrier in the trailer hitch receiver, choose a carrier that positions the load as close to the vehicle as possible. Make sure the total weight, including the carrier, is no more than half of the maximum allowable tongue weight for the vehicle or 227 kg (500 lb), whichever is less.

Towing Equipment

Hitches

⚠ Warning

In order to avoid serious injury or property damage, always follow the hitch manufacturer's instructions when securing your draw bar/coupling device to the vehicle's hitch receiver.

Ensure that the draw bar/coupling device is secured with a locking retainer pin or other means such that rotation of the pin or locking mechanism will not cause the pin to back out or loosen during use. Failure to correctly secure the draw bar/coupling device to the receiver can result in separation of the hitch/receiver while towing.

Always use the correct hitch equipment for your vehicle. Crosswinds, large trucks going by, and rough roads can affect the trailer and the hitch.

Proper hitch equipment for your vehicle helps maintain control of the vehicle-trailer combination. Many trailers can be towed using a weight-carrying hitch which has a coupler latched to the hitch ball, or a tow eye latched to a pintle hook.

Other trailers may require a weight-distributing hitch that uses spring bars to distribute the trailer tongue weight between your vehicle and trailer axles.

Consider using mechanical sway controls with any trailer. Ask a trailering professional about sway controls or see the trailer manufacturer's recommendations and instructions.

See “Maximum Trailer Tongue Weight” under *Trailer Towing* ⇨ *5* for weight limits with various hitch types.

Conventional Hitch

A conventional hitch is bolted to the frame or cross member of the tow vehicle, and is generally rated Class 2, 3, 4, or 5.

When using a conventional hitch, always use the correct hitch ball size for the trailer. The correct trailer hitch ball size will be shown on the trailer's coupler. The ball's shank size should match the hole in the draw-bar where the ball will attach. If the ball's shank is too small for the hole, the ball may move and come loose. The hitch ball weight rating should exceed the Gross Vehicle Weight Rating for your trailer.

Hitch Cover

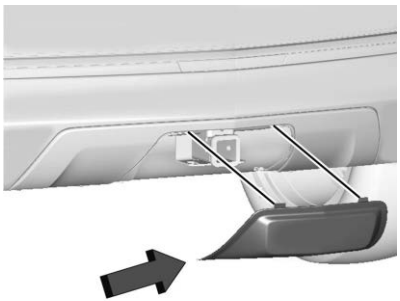

To remove the hitch cover, if equipped:

1. Remove the two fasteners on the lower tabs.
2. Pull the lower edge of the cover to about a 45-degree angle.
3. Pull the cover downward to disengage the upper attachments.

To reinstall the hitch cover:

1. Hold cover at a 45-degree angle to the vehicle and push the upper tabs into the slots in the bumper.
2. Push the bottom of the cover forward until the lower tabs line up with the lower slots.

3. Snap the hitch cover into place by pushing the upper corners forward.
4. Reinstall the two fasteners on the lower tabs.

Weight-Distributing Hitch and Adjustment

A weight-distributing hitch may be useful with some trailers. Use the following guidelines to determine if a weight-distributing hitch is required.

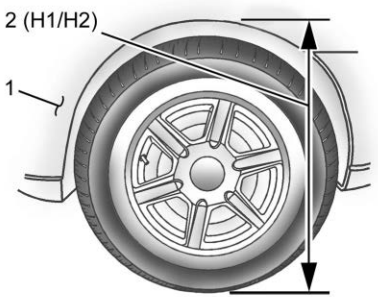

1. Front of Vehicle
2. Body to Ground Distance

When using a weight-distributing hitch, measure the front fender height distance (2) before connecting the trailer. Adjust the spring bars until the front fender height distance (2) is the same height before the trailer was connected. Do not reduce the front fender height below the initial distance (2). See "Leveling the Trailer" later in this section.

Leveling the Trailer

⚠ Warning

Always level the trailer front-to-back using the correct trailer hitch drawbar. Towing with a trailer that is not level can result in incorrect loading of trailer axles, springs, and tires, which can lead to trailer sway, trailer damage, and/or trailer tire blowouts resulting in an accident causing potential injury and/or death. Do not attempt to tow a trailer that is not level.

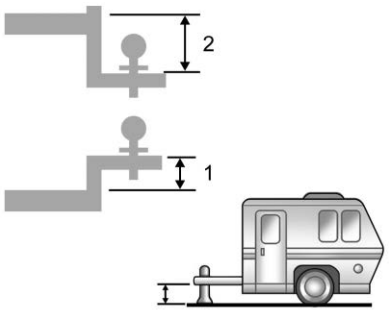

1. Drawbar rise
2. Drawbar drop

Select the correct hitch drawbar rise or drop to level the trailer.

Tires

- Do not tow a trailer while using a compact spare tire on the vehicle.
- You must properly inflate tires to support loads while towing a trailer. See your owner's manual for instructions on proper tire inflation.

Safety Chains

⚠ Warning

Always cross trailer safety chains and never allow them to drag on the ground. Improper installation can result in damage to the chains and could lead to loss of control of the trailer and tow vehicle. Serious injury can occur if the trailer detaches from the tow vehicle.

Conventional Hitch

Always attach chains between the vehicle and the trailer. Attach the chains to the holes on the trailer hitch platform. Cross the safety chains under the tongue of the trailer to help prevent the tongue from contacting the road if it becomes separated from the hitch. Leave just enough slack so the combination can turn.

Trailer Brakes

⚠ Warning

Never attempt to tamper with the hydraulic brake system for your trailer brakes. Do not connect a trailer's hydraulic brake system directly to your vehicle's hydraulic brake system. If you do, both the vehicle antilock brakes and the trailer brakes may not function, which could result in a crash.

Loaded trailers over 680 kg (1,500 lb) must be equipped with brake systems and with brakes for each axle.

Use trailer braking equipment meeting or exceeding the Canadian Standards Association (CSA) requirement CAN3-D313.

State or local regulations may require trailers to have their own braking system if the loaded weight of the trailer exceeds a maximum value. Read and follow the instructions for the trailer brakes so they are installed, adjusted, and maintained properly.

Auxiliary Battery

Caution

To prevent draining the auxiliary battery, always turn off electrical equipment when not in use and do not use any equipment that may exceed the maximum amperage rating of 30 amps.

If equipped, the auxiliary battery can supply electrical power to additional equipment, such as a slide-in camper.

Locate the auxiliary battery connector under the hood on the driver side of the vehicle, next to the engine compartment fuse block. Follow the proper installation instructions included with any electrical equipment that is installed.

Trailer Wiring Harness

Basic Trailer Wiring

Warning

Incorrect trailer wiring may cause blown fuses, damaged wires, trailer brakes being permanently applied, or trailer brakes not applying. This could result in a crash and/or may cause damage to the vehicle. Always follow the connector/trailer manufacturer's instructions for your trailer's wiring connection.

Warning

If mud, dirt, salt and water are not removed from the connector prior to installation, it may cause the trailer wiring harness to be loose and result in damage to the vehicle. Always ensure the connector is fully secured in the trailer wiring harness.

Use only a round, seven-wire connector with flat blade terminals meeting SAE J2863 specifications for proper electrical connectivity.

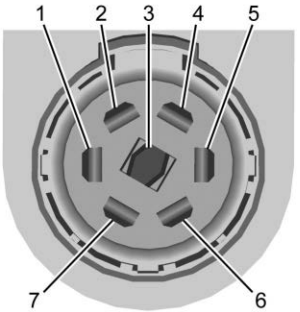

1. Left Turn/Brake
2. Tail Lights
3. Reverse Lights
4. Battery Feed
5. Right Turn/Brake
6. Electric Brakes
7. Ground

Electric Trailer Brake Control Wiring Provisions

Wiring provisions for an aftermarket electric trailer brake controller are included with the vehicle as part of the trailer wiring package. The harness contains the following circuits:

- Electric Trailer Brakes
- Battery Feed
- Brake Apply Signal
- Ground

Refer to the aftermarket electric trailer brake controller owner's manual to determine wire color coding of the electric trailer brake controller. The wire colors on the brake controller may be different from the vehicle. Your dealer or a qualified service center should install the electric trailer brake controller.

Trailer Lights

Always check that all trailer lights are working at the beginning of each trip, and periodically on longer trips.

If equipped, the Trailering App will turn the trailer lights on and off to determine if they are working. See "Light Test" under *Trailering App* ⇨ *14*.

Turn Signals When Towing a Trailer

When properly connected, the trailer turn signals will illuminate to indicate the vehicle is turning, changing lanes, or stopping. When towing a trailer, the arrows on the instrument cluster will illuminate even if the trailer is not properly connected or the bulbs are burned out.

Tow/Haul Mode

If equipped, Tow/Haul mode assists when pulling a heavy trailer, or a large/heavy load.

For instructions on how to enter Tow/Haul Mode, see your owner's manual.

Trailer Sway Control (TSC)

⚠ Warning

Trailer sway can result in a crash and in serious injury or death, even if the vehicle is equipped with TSC.

If the trailer begins to sway, reduce vehicle speed by gradually removing your foot from the accelerator. Then pull over to check the trailer and vehicle to help correct possible causes, including an improperly or overloaded trailer, unrestrained cargo, improper trailer hitch configuration, or improperly inflated or incorrect vehicle or trailer tires. See *Towing Equipment* ⇨ *9* for trailer ratings and hitch setup recommendations.

Trailer sway is the side-to-side motion of a trailer while towing. Vehicles equipped with the Trailer Sway Control System use the Stabilitrak/Electronic Stability Control System to control trailer sway by applying the vehicle brakes at each wheel to limit motion and acceleration. See your owner's manual.

When the system detects and engages trailer sway control, the Stabilitrak/Electronic Stability Control warning light flashes on the instrument cluster. See your owner's manual.

If the Stabilitrak/Electronic Stability Control System is disabled or fails, Trailer Sway Control will not function.

If the system detects increased trailer sway, it applies the vehicle brakes at each wheel to limit motion. You may notice the vehicle limit acceleration.

Trailer Tires

⚠ Warning

To avoid damage to your trailer tires, which could cause instability or a sudden loss of pressure:

(Continued)

Warning (Continued)

- Always check all trailer tire pressures before each trip when the tires are cool. Note that trailer tires differ from vehicle tires. Trailer tires are designed with stiff sidewalls to help prevent sway and to support heavy loads. These features can make it difficult to determine if the trailer tire pressures are low only based on a visual inspection.
- Never load the trailer with more weight than the tires are designed to support. Check the load rating on the trailer tire sidewall.
- Replace deteriorated trailer tires. The trailer tire sidewall shows the week and year the tire was manufactured. Many trailer tire manufacturers recommend replacing tires more than six years old.
- Always follow the maximum speed rating for the trailer tires. This may be significantly lower than the vehicle tire speed rating. The speed rating may be on the trailer tire sidewall. If the speed rating is not shown, the default trailer tire speed rating is 105 km/h (65 mph).

Trailering App

Trailer Light App

If equipped, the Trailering App is on the Infotainment home screen.

Status View

The Status view shows:

- Lights
- Checklists

Each section shows high level status information for the feature. Selecting a section will open up a new screen with additional information and/or options.

Light Test

Select Start to cycle the trailer lights on and off to determine if they are working. The test follows this sequence:

1. The running lights turn on first and remain on throughout the sequence.
2. The brake lights turn on for about two seconds.
3. The left turn signal light flashes three times.
4. The right turn signal light flashes three times.
5. The reverse lights turn on for about two seconds.
6. Steps 2–5 repeat for approximately one minute and 45 seconds, or until the test deactivates.

Select Stop to end the test.

The sequence also deactivates when any of the following occur:

- The vehicle is turned off.
- The transmission is shifted out of P (Park).
- The brake pedal is pressed.
- The turn signal is activated.
- The hazard warning lights are activated.

Checklist View

This view shows the recommended steps to take before towing a trailer.

- Touch the box next to each item if that step has been completed.
- Touch **i** to access a detailed view of each step.

  Within each detailed view, touch Next and Back to navigate between steps.
- Touch Uncheck All to clear the completed statuses from all items in the current checklist.

Index

A

Apps
- Trailering..... 14

D

Driving
- Characteristics and Towing Tips..... 1

E

Equipment, Towing..... 9

G

General Information
- Towing..... 1

T

Towing
- Driving Characteristics..... 1
- Equipment..... 9
- General Information..... 1

Trailer
- Sway Control (TSC)..... 13
- Towing..... 5

Trailering
- App..... 14



27Traverse_Trailer_SUP_enUS_20342626A