
CHEVROLET
2027
Silverado Police and
Special Service Packages

NOT FOR RESALE

Contents

Introduction 1
Keys, Doors, and Windows 3
Seats and Restraints 6
Instruments and Controls 13
Lighting 16
Climate Controls 18
Driving and Operating 19
Vehicle Care 22
Service and Maintenance 25
Index 26

Introduction



The names, logos, emblems, slogans, vehicle model names, and vehicle body designs appearing in this manual including, but not limited to, GM, the GM logo, CHEVROLET, the CHEVROLET Emblem, and SILVERADO are trademarks and/or service marks of General Motors LLC, its subsidiaries, affiliates, or licensors.

For vehicles first sold in Canada, substitute the name "General Motors of Canada Company" for Chevrolet Motor Division wherever it appears in this manual.

This manual describes features that may or may not be on the vehicle because of optional equipment that was not purchased on the vehicle, model variants, country specifications, features/applications that may not be available in your region, or changes subsequent to this publication's release, including changes in standard or optional content.

The Special Service Package is neither designed nor intended for use in high-speed emergency vehicle operations.

Refer to the purchase documentation relating to your specific vehicle to confirm the features.

Canadian Vehicle Owners

You can obtain a copy of this guide in French from your dealer, at www.helminc.com, or from the following address:

Propriétaires Canadiens

On peut obtenir un exemplaire de ce guide en français auprès du concessionnaire ou à l'adresse suivante:

Helm, Incorporated
Attention: Customer Service
47911 Halyard Drive
Plymouth, MI 48170
USA

©2026 General Motors LLC. All Rights Reserved.

NOT FOR RESALE

Québec Consumer Protection Act Disclosure (Québec Customers Only)

Information regarding the availability of replacement parts, repair services, and information necessary to maintain or repair our products (applicable to Quebec consumers only).

Pursuant to the Consumer Protection Act (Québec) and the applicable regulation, General Motors of Canada Company does not guarantee the availability of replacement parts or repair services for its products, nor does it guarantee the availability of information necessary to maintain or repair its products. General Motors of Canada Company does offer access to certain automobile data for purposes of diagnostics, maintenance or repair in accordance with section 39.4 of the Consumer Protection Act (Québec).

Using this Supplement

This supplement contains information specific to the unique components of the vehicle. It does not explain everything you need to know about the vehicle. Read this supplement along with the owner's manual to learn about the vehicle's features and controls.

Index

A good place to look for what you need is the Index in the back of this supplement. It is an alphabetical list of what is in the supplement, and the page number where you will find it.

Technical Support

For additional technical information, go to the GM Upfitter Integration website. See www.gmupfitter.com.

Danger, Warning, and Caution

Caution

GM cannot be responsible for any changes made to the vehicle. Have all electrical and body modifications performed by experienced technicians.

- Be sure that any modified or added wiring will work properly with your vehicle's wiring system.

(Continued)

Caution (Continued)

- See that all wiring is properly protected by fuses, and not causing an overload to connectors and components.
- Do not route wiring in areas of the vehicle where temperatures can be high or where wiring may be cut, pinched, or rubbed.
- See that all added wiring is of the same or smaller gauge than the wire it is being attached to for proper fuse protection.
- Be sure that all holes drilled in the body are properly sealed and corrosion protected. See that the vehicle's wiring harnesses, piping, and other components have not been displaced or damaged during customer installations of equipment and wiring.

NOT FOR RESALE

Keys, Doors, and Windows

Keys and Locks
Specific Cylinder Unit for Single Key - Random Code System 3
Remote Key Operation 4
Automatic Door Lock Disable (SEO BCV) 4
Lockout Protection 4
Doors
Rear Doors (SEO 6N6) 4
Vehicle Security
Content Alarm Disable (SEO UTQ) 5
Windows
Rear Window Inoperative (SEO 6N5) 5

Keys and Locks

Specific Cylinder Unit for Single Key - Random Code System

If your vehicles are equipped with one of these options, the entire fleet of vehicle locks can be operated with one mechanical key.

- SEO 6E2 – Specific Fleet Key Code
- SEO 6E8 – Specific Fleet Key Code

Your vehicle will be equipped with a standard production random mechanical key code if one of the optional fleet codes was not ordered.

Vehicles with a random mechanical key code can learn a maximum of eight remote keys. Vehicles with the specific fleet key option (SEO 6E2 or SEO 6E8) can learn an unlimited number of remote keys using one of the previously learned remote keys.

For specific mechanical key code information, contact your dealer.

Remote Keyless Entry is a standard feature and operates the front left and right doors, if equipped. Four additional remote keys may have been ordered with your vehicle. Purchasing extra keys and remote keys or programming is a customer's responsibility.

See your dealer for additional information regarding availability of more mechanical keys and remote key units for your vehicle.

The remote key has the vehicle locator/panic alarm button disabled. Pressing the button will neither sound the horn nor flash the exterior lights.

Remote Key Programming – 5H1 – Fleet Package of Additional Unprogrammed Remote Units

For the Silverado Police and Silverado Special Services Package vehicles, the fleet package (5H1) has two additional unprogrammed remote units.

For remote key button functions, each Silverado Police and Special service Package vehicle can have up to eight remote keys programmed to it. The first eight remote keys are given the positions #1–#8 in the Remote Keyless Entry system. Additional remote keys, starting with #9, will override previously programmed remote keys, starting at #1.

For passive functions such as unlocking the vehicle through the door handle or starting the vehicle, unlimited remote keys may be programmed.

NOT FOR RESALE

Verify that the proper remote keys are learned to the vehicle.

To program a remote key to the vehicle:

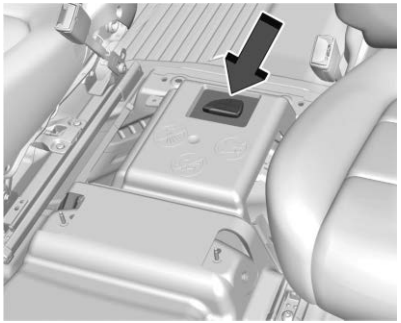

1. One previously paired remote key must be in the vehicle. Place the remote key you want to pair on the Sensing Diagnostic Module (SDM) cover on the floor between the front seats.
2. On the infotainment home screen, select Vehicle > Settings > Remote Lock, Unlock, Start > Remote Key Pairing.
3. Follow the onscreen instructions.

Remote Key Operation

The remote key platform is located under the Sensing Diagnostic Module (SDM) cover on the floor between the front driver and passenger seat.

If the remote key battery is dead, or if a new key needs to be learned, then the key needs to be placed on the SDM cover.

See Radio Frequency Statement in the owner's manual.

Automatic Door Lock Disable (SEO BCV)

This feature allows the Automatic Door Locks to be disabled through the Vehicle Personalization.

Lockout Protection

The Silverado Special Service vehicles do not have the same Lockout Protections as civilian vehicles. When locking is requested with the driver door open, all doors will lock and remain locked. The warning audible alert will sound if the ignition is on or in accessory mode and the driver door is open. If running, the engine will remain running, but it will time out if Protected Idle is not activated.

Following closure of all doors, the vehicle will perform a check for how many remote keys are inside of it. If no keys are detected, or the number has reduced from the previous check, then the vehicle will remain locked. If the same amount of keys are detected, then the driver door will unlock. Press and hold the interior door lock switch to override this check.

Doors

Rear Doors (SEO 6N6)

Inoperative Rear Door Locks and Handles

This feature makes the rear door locks inoperative. When the feature is enabled, the rear door handles are inoperative and the rear doors can only be opened from the outside.

Refer to the Technical Specifications Guide available on www.gmfleet.com/police for instructions.

NOT FOR RESALE

Vehicle Security

Content Alarm Disable (SEO UTQ)

This option disables the Content Theft Alarm system.

Windows

Rear Window Inoperative (SEO 6N5)

This vehicle has a Body Control Module calibration feature that disables the rear window switches, allowing only the driver to operate the rear windows. All other driver and passenger window controls are unaffected by this feature.

NOT FOR RESALE

Seats and Restraints

Airbag System
Questions and Answers About Airbags and Specialty Law Enforcement Vehicles 6
Customer-Installed Equipment 7
Airbag Deployment Diagrams 9

Airbag System

Questions and Answers About Airbags and Specialty Law Enforcement Vehicles

Q: Can equipment such as radar devices, video cameras, and radio trees be mounted in a specialty vehicle equipped with a right front passenger frontal airbag?

A: Yes, but care must be taken to properly mount the equipment outside of the airbag "deployment zone."

Q: What is the airbag "deployment zone"?

A: The term "deployment zone" describes the space an airbag takes up when fully inflated. Airbags need room to work properly, and anything in the "deployment zone" — such as improperly mounted equipment — can greatly affect the performance of the airbag.

⚠ Warning

Airbags inflate with great force, faster than the blink of an eye. No objects, such as shotguns, should be placed over or near the airbag covers. Equipment mounted too close to an inflating airbag could prevent the airbag from operating properly to protect the occupants or could be forced into an occupant or break and become a dangerous projectile, causing severe injury or even death. To help prevent injury and to allow the airbag to perform as it was designed, do not mount equipment inside the airbag deployment zones.

Q: How can I identify the airbag "deployment zone" in my vehicle?

A: See *Airbag Deployment Diagrams* ➪ *9* for more information. The diagrams provide the approximate dimensions of the "deployment zones" for your specialty vehicle. Before doing any service work, including the installation of any equipment, consult the appropriate service manual.

NOT FOR RESALE

Q: Is it possible to shield equipment so it does not interfere with airbag deployment?

A: While shielding may protect certain equipment from being damaged or dislodged, it may also negatively affect how an airbag inflates. Therefore, we cannot recommend the placement of any equipment in the deployment zone, even when shielding.

Q: Can the installation of push bumpers on the front end of the vehicle affect the deployment of the airbag?

A: It is not likely that installing push bumpers will affect sensing for the airbag as long as the vehicle structure itself is not modified. On pickup models, push bumper styles with vertical pushing members that are in fore-aft alignment with the front airbag sensors are not recommended. GM is not aware of any adverse defects from the many push bumpers that have been installed on current model GM police vehicles with airbags.

See "Adding Equipment to the Airbag-Equipped Vehicle" in the owner's manual for more information.

Customer-Installed Equipment

Before installing equipment, read the following.

Caution

GM approved service procedures must be followed to remove and reinstall the instrument panel to the pad to ensure proper airbag deployment.

⚠ Warning

Do not install equipment in the inflation path of any airbag. The equipment may interfere with the deployment of the airbag, may damage the airbag, or otherwise be damaged or forced into an occupant, all of which may cause severe injury or even death.

(Continued)

Warning (Continued)

Do not attach anything to the steering wheel hub or mount any equipment within the deployment zone for the driver airbag.

Do not mount equipment on the passenger side of the instrument panel top pad deployment zone. Equipment should not be mounted on or around the passenger airbag opening because of a deploying airbag. To allow the airbag to perform as it was designed, do not mount equipment inside the airbag deployment zone.

Do not use seat accessories that block the inflation path of the driver or passenger seat-mounted side impact airbag or install equipment in the seat-mounted side impact airbag deployment zones.

Do not mount a security barrier such that the ends of the barrier or brackets are within the roof-rail airbag deployment zones.

Avoid installing wiring for roof-rail emergency lighting or radio antennas that may restrict the proper deployment of the roof-rail airbags.

(Continued)

NOT FOR RESALE

Warning (Continued)

Do not use seat accessories, console accessories, or other accessories that block the inflation path of the driver seat front center airbag (if equipped). Do not remove the front center console to install a police package center console, or otherwise install equipment or mount equipment between or just behind the front bucket seats on vehicles equipped with the driver seat front center airbag.

Caution

The police vehicle has roof-rail airbags. Do not mount a security barrier such that the ends of the barrier or brackets are within the roof-rail deployment zones.

Caution

The police vehicle has a rollover sensor mounted on the centerline of the vehicle between the driver and front outboard

(Continued)

Caution (Continued)

passenger positions. If the vehicle has individual front seats, the rollover sensor will be exposed. Do not mount equipment within 25 mm (1 in) of the rollover sensor. This may affect the performance of multiple restraint systems.

Caution

Avoid installing wiring for roof-rail emergency lighting or radio antennas that may restrict the proper deployment of the roof-rail airbags.

NOT FOR RESALE

Airbag Deployment Diagrams

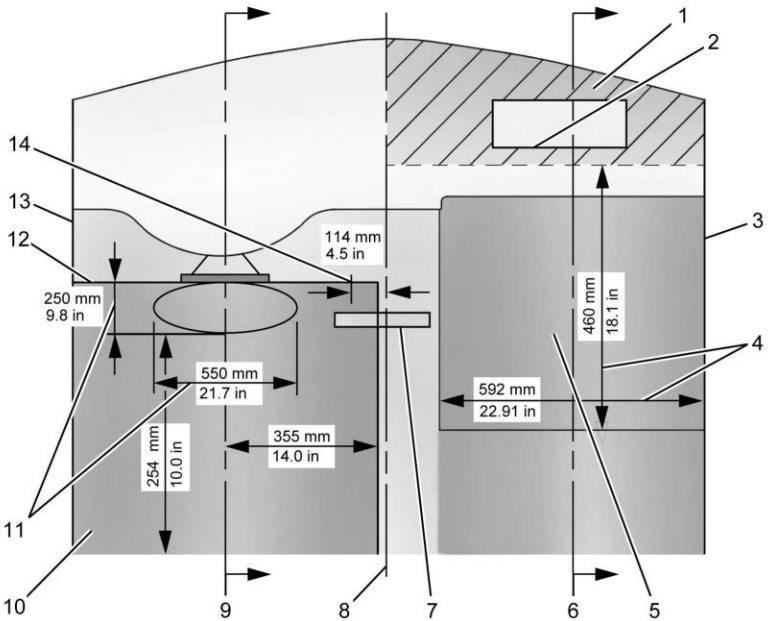

Instrument Panel Top View – Approximate Frontal Airbag Deployment Zones

1. Passenger Side Instrument Panel Top Surface Zone
2. Passenger Frontal Airbag Module Trim Panel – Rear Edge
3. Passenger Side Door
4. Approximate Dimensions of Inflated Airbag
5. Passenger Frontal Airbag Deployment Zone
6. Passenger Centerline
7. Inside Rearview Mirror
8. Vehicle Centerline
9. Driver Centerline
10. Driver Airbag Deployment Zone
11. Driver Inflated Airbag Dimensions
12. Front of Steering Wheel (See also "Side View of Driver Frontal Airbag Deployment Zone" Following)
13. Driver Side Door
14. Shift Selector Arc

See *Customer-Installed Equipment* ➪ *7*.

NOT FOR RESALE

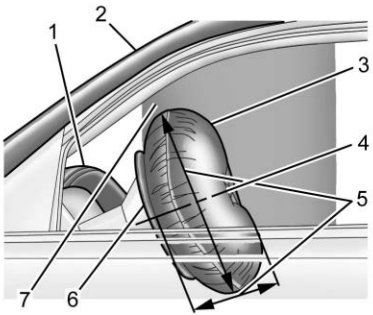

Side View of Driver Frontal Airbag Deployment Zone

1. Top of Instrument Panel
2. Top Edge of Windshield
3. Inflated Airbag – Steering Wheel
4. Centerline of Steering Column at Mid-Tilt
5. Driver Inflated Airbag Dimensions

   250 mm (9.8 in) From Front of Steering Wheel and 550 mm (21.7 in) Diameter From Center of Steering Wheel
6. Front of Steering Wheel
7. Driver Airbag Deployment Zone Including Inflated Driver Airbag

See *Customer-Installed Equipment* ⇨ 7.

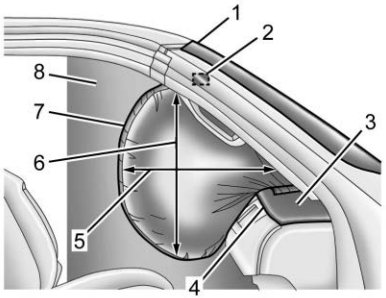

Side View of Passenger Frontal Airbag Deployment Zone

1. Top Edge of Windshield
2. Inside Rearview Mirror
3. Instrument Panel Top Surface Zone
4. Passenger Frontal Airbag Module Trim Panel – Rear Edge
5. Inflated Airbag – Horizontal Dimension

   Approximately 460 mm (18.1 in)
6. Inflated Airbag – Vertical Dimension (from Top of Occupant's Lap to Headliner)
7. Inflated Airbag – Instrument Panel
8. Passenger Frontal Airbag Deployment Zone

See *Customer-Installed Equipment* ⇨ 7.

NOT FOR RESALE

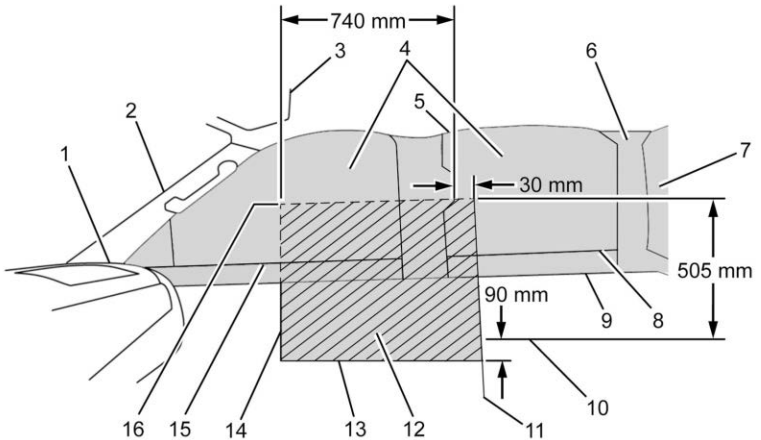

Roof-rail and Seat-mounted Side Impact Airbag Deployment Zones – Passenger Side Shown, Driver Side Similar

1. Front of Deployment Zone at Bottom of Windshield Pillar Trim
2. A-Pillar Trim with Grab Handle (Passenger Side)
3. Sun Visor
4. Roof Rail Airbag Deployment Zone – Seat Rows 1 and 2 and Cargo Area
5. Top of Roof Rail Airbag Deployment Zone – Along Roof-rail at Edge of Headliner
6. C-Pillar Upper Trim
7. Rear Window
8. Top Edge of Rear Door Trim
9. Bottom Edge of Roof Rail Airbag Deployment Zone at Top of Side Door Armrests
10. Top Surface of Front Seat Cushion (with Seat Fully Lowered)
11. Rear Edge of Seat-Mounted Side Impact Airbag Deployment Zone

    30 mm (1.2 in) Rearward of Back Edge of B-Pillar Trim Grab Handle
12. Seat-Mounted Side Impact Airbag Deployment Zone
13. Bottom Edge of the Seat-Mounted Side Impact Airbag Zone

    90 mm (3.5 in) Below Top of Seat Cushion with the Seat Fully Lowered
14. Front Edge of Seat Mounted Side Impact Deployment Zone

    740 mm (29.1 in) Forward of Back Edge of B-Pillar Trim Grab Handle
15. Top Edge of Front Door Trim
16. Top Edge of Seat-Mounted Side Impact Deployment Zone

    505 mm (19.9 in) Above Top Surface of Seat Cushion with the Seat Fully Lowered

NOT FOR RESALE

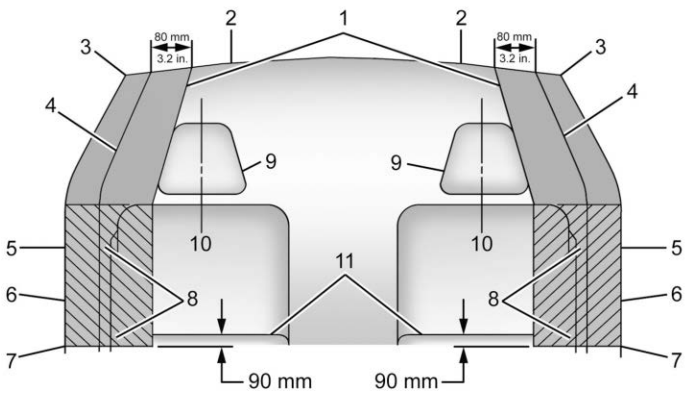

Roof-rail and Seat-mounted Side Impact Airbag Driver and Passenger Deployment Zones – View from Rear of Vehicle

1. Roof-rail Airbag Deployment Zone
2. Underside of Headliner
3. Edge of Headliner
4. Inner Center and Rear Pillar Trim
5. Inner Front and Rear Door
6. Side Door Upper Armrests and Rear Quarter Trim Armrests
7. Bottom Edge of Seat-Mounted Side Impact Airbag Deployment Zone

   90 mm (3.3 in) Below Top Surface of Outboard Front Seat Cushion with Seat Fully Lowered
8. Seat-Mounted Side Impact Deployment Zone
9. Front Seat Head Restraint
10. Seat Centerline
11. Top of Seat Cushion

The driver and passenger seat-mounted side impact airbag deployment zones move up, down, fore, aft, as the seat is adjusted by the occupant. The deployment zones also move as the seatback is reclined and raised.

See *Customer-Installed Equipment* ⇨ 7.

NOT FOR RESALE

Instruments and Controls

Controls
Steering Wheel Controls 13
Horn 13
Power Outlets 13
Warning Lights, Gauges, and Indicators
Instrument Cluster 15
Speedometer 15

Controls

Steering Wheel Controls

The steering wheel controls on left rear side do not control radio favorites. Instead, momentary output in blunt cut harness for two-way radio microphone and latching output in blunt cut siren/light.

Horn

Wiring Provisions for Horn/Siren Circuit - (SEO 6J4)

A switch can be connected to select either the horn or siren operation when the is pressed on the steering wheel.

A 0.35 mm (22 gauge) wire is connected to an in-line connector in the horn circuit of the instrument panel harness under the instrument panel. The end of this harness extension is in a 1.5 m (5 ft) loop of wire coiled under the center of the instrument panel.

Power Outlets

⚠ Warning

Power is always supplied to the outlets. Do not leave electrical equipment plugged in when the vehicle is not in use because the vehicle could catch fire and cause injury or death.

Caution

Leaving electrical equipment plugged in for an extended period of time while the vehicle is off will drain the battery. Always unplug electrical equipment when not in use and do not plug in equipment that exceeds the maximum 15 amp rating.

Caution

Hanging heavy equipment from the power outlet can cause damage not covered by the vehicle warranty. The power outlets are designed for accessory power plugs only, such as cell phone charge cords.

NOT FOR RESALE

The vehicle has one 110/120 Volt Alternating Current outlet in the center console.

Lift the cover to access and replace when not in use.

Power Outlet 110/120 Volt Alternating Current

The 110/120 volt power outlet is in the center console.

When the ignition is on, power is supplied to the outlets after the DC/AC switch is pressed. A green indicator light on the DC/AC switch indicates when the DC/AC operation is active. One power outlet can be used with electrical equipment that uses a maximum of 400 watts. Ensure that all connected devices do not exceed 400 watts.

The power outlet can be turned off by pressing the DC/AC switch. The power outlet can be turned back on after 10 seconds, during which the indicator light on the switch will flash.

An indicator light on the outlet illuminates when power is provided to the outlet and no system fault is detected. The outlets will not operate when the ignition is off, the DC/AC switch is not pressed, or the plug is not fully seated into the outlet.

If equipment is connected using more than 400 watts or a system fault is detected, a protection circuit shuts off the power supply and the indicator light turns off.

Do not use a power outlet with a missing or damaged cover.

The power outlet is not designed for the following, and may not work properly if they are plugged in:

- Equipment with high initial peak wattage, such as compressor-driven refrigerators and electric power tools
- Other equipment requiring an extremely stable power supply, such as microcomputer-controlled electric blankets and touch sensor lights
- Medical equipment

NOT FOR RESALE

Warning Lights, Gauges, and Indicators

Instrument Cluster

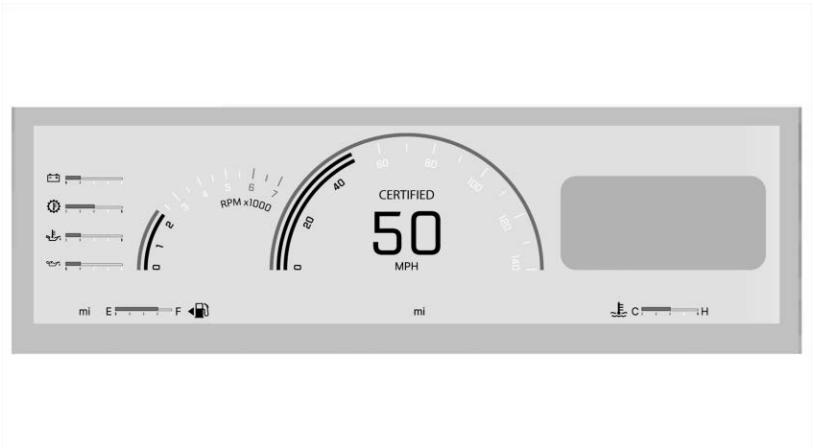

Gauge View Outline Shown, Other Views Similar

See the owner's manual for additional information on the Instrument Cluster.

Speedometer

The speedometer shows the vehicle speed in either kilometers per hour (km/h) or miles per hour (mph).

The speedometer for the Silverado Police Package (RPO 9C1), and the Silverado Special Service Package (RPO 5W4) displays a maximum vehicle speed of 180 km/h (112 mph). The Silverado Special Service Package is neither designed nor intended for use in high-speed emergency vehicle operations.

Speedometer Certification

Specifications are at temperatures of −23 to 49 °C (−10 to 120 °F).

Inaccuracies due to vehicle speed sensing are included. This vehicle is equipped with an electronically controlled speedometer which is designed to be accurate +/− 3 km/h (+/− 2 mph) through its range of function.

The Silverado Police Package (9C1) speedometer is calibrated with the 5.7L engine (L76), automatic transmission (MHU), 3.23 axle (GU5), and P275/60 R-20 S rated tires.

NOT FOR RESALE

Lighting

Lighting Features
Exterior Lighting Features 16

Lighting Features

Exterior Lighting Features

The following exterior lighting features apply to vehicles first sold in the United States.

The vehicle has Daytime Running Lights and an Automatic Headlight System. The Daytime Running Lights and Automatic Headlight System can be turned off with the headlight switch when the transmission is in P (Park) and the engine is at idle. If the engine is not turned off, the Daytime Running Lights and Automatic Headlight System will remain off when the transmission is placed in gear. The vehicle may be driven with the lights off for one ignition cycle.

The vehicle may have been built with Special Equipment Option (SEO) 9G8, Daytime Running Lights and Automatic Headlight System DISABLE. This feature turns off Daytime Running Lights and Automatic Headlight System and requires manual control of the exterior lighting. See your dealer to restore the Daytime Running Lights and Automatic Headlight System to normal operation.

With 9G8, the instrument cluster displays are dimmable only when the exterior lights control is in the parking light or headlight position.

For vehicles first sold in Canada, the Daytime Running Lights and Automatic Headlight System can be turned off if the transmission is in P (Park). See “Daytime Running Lights (DRL)” in the owner’s manual.

Spotlight - SEO 7X2, 7X3, 7X6, 7X7

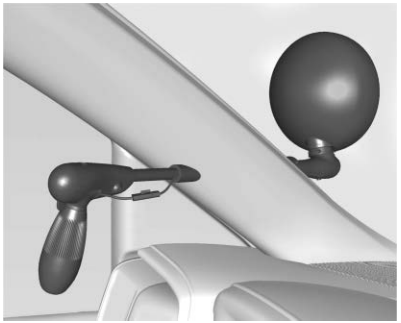

LED Spotlight

A Unity Series X335, high intensity, LED 15 cm (6 in) spotlight is mounted in the left windshield A pillar (SEO 7X3). SEO 7X2 includes a driver side and a passenger side LED spotlight in the windshield A pillars. The lights are each protected by a 15 amp fuse in the underhood battery disconnect unit.

NOT FOR RESALE

See your dealer or www.gmupfitter.com for light replacement procedures.

Halogen Spotlight

A Unity Series 330, high intensity, 100 watt halogen (H3 bulb) 15 cm (6 in) spotlight is mounted in the left windshield A pillar (SEO 7X6). SEO 7X7 includes a driver side and a passenger side spotlight in the windshield A pillars. The lights are each protected by a 15 amp fuse in the underhood battery disconnect unit.

See your dealer or www.gmupfitter.com for light replacement procedures.

Surveillance Mode — SEO 5J3

The Silverado Special Service Package has a Body Control Module (BCM) calibration which disables the Automatic Headlight System and all automatic exterior and interior lighting.

When activated, with the exterior light control switch in the AUTO or ⏻ position, the exterior and interior lighting will be disabled or dimmed to a minimum federally regulated level.

For detailed technical information on activation of this feature, refer to the vehicle technical guide under the Body Builder Manual section on www.gmupfitter.com.

Remote Function Feedback SEO 5J1

The Silverado Special Service Package has a Body Control Module (BCM) calibration which disables the following standard features:

- Entry Lighting and Exit Lighting
- Remote Keyless Entry Feedback (Horn Beep), (Lights Flash), and (Panic Alarm)

Taillight Flash - SEO 5J9

Taillight Flash (Red/White Wig Wag)

The Silverado Special Service Package has a Body Control Module (BCM) calibration, which, when activated, flashes the stop and reverse lights alternately.

For detailed technical information on activation of this feature, refer to the vehicle technical guide under the Body Builder Manual section on www.gmupfitter.com.

Taillight Flash – SEO 5L0

Taillight Flash (Red/Red)

A Body Control Module (BCM) calibration, which, when activated, flashes the stop lights alternately. For detailed technical information on activation of this feature, refer to the vehicle technical guide under the Body Builder Manuals section on www.gmupfitter.com.

Headlight Flash – SEO 6J7

Headlight Flash (High Beam)

A Body Control Module (BCM) calibration, which, when activated, flashes the high beams alternately. For detailed technical information on activation of this feature, refer to the vehicle technical guide under the Body Builder Manuals section on www.gmupfitter.com.

NOT FOR RESALE

Climate Controls

Climate Control Systems
Rear Climate Control System 18

Climate Control Systems

Rear Climate Control System

This vehicle does not have climate controls in the second row.

NOT FOR RESALE

Driving and Operating

Driving Information
Control of a Vehicle 19
Vehicle Load Limits 19
Starting and Operating
Stop/Start System 21
Extended Parking 21
Ride Control Systems
Driver Mode Control 21

Driving Information

Control of a Vehicle

⚠ Warning

Driving at a high rate of speed without the necessary equipment or training could cause personal injury or death. Do not attempt high speed operation without training or with an improperly equipped vehicle.

Vehicle Load Limits

The information in this section of the supplement is for those who intend to install additional equipment to the police vehicle after it has left the factory, and for those who will be driving and loading the vehicle with passengers and/or cargo.

⚠ Warning

Do not load the vehicle any heavier than the Gross Vehicle Weight Rating (GVWR), or either the maximum front

(Continued)

Warning (Continued)

or rear Gross Axle Weight Rating (GAWR). This can cause systems to break and change the way the vehicle handles. This could cause loss of control and a crash. Overloading can also reduce stopping performance, damage the tires, and shorten the life of the vehicle.

Two labels on your vehicle show how much weight it was designed to carry, the Tire and Loading Information label and the Certification/Tire label. These labels are attached to your vehicle and give you the maximum load capacity, the Gross Vehicle Weight Rating (GVWR) and the Gross Axle Weight Rating (GAWR) for your vehicle. See “Vehicle Load Limits” in the owner manual for additional loading information.

The following guidelines can help you with proper loading and load distribution when installing additional equipment on the police package and special service package.

NOT FOR RESALE

Adding Equipment to Your Vehicle

Before adding accessories or equipment to your police vehicle, there are some things you need to know:

- The police vehicle's maximum capacity weight.
- The weight of your police vehicle, including a full tank of fuel but without a driver and passengers.
- The weight of items you plan on adding to your police vehicle, like roof mounted light bar(s), push bumpers, security barrier(s), rear storage organizer, highway flares, fire extinguishers, weapons, ammunition, radios, and video equipment.
- The weight and number of passengers you intend to carry in your vehicle.
- The total weight of any additional cargo you intend to carry in your vehicle.

When planning your vehicle equipment installation, remember not to exceed the Gross Vehicle Weight Rating (GVWR) or the Gross Axle Weight Rating (GAWR) of the front or rear axles. To keep the available load weight less than the vehicle capacity weight, you may need to limit the number of passengers you carry in your vehicle or change your choice of additional equipment.

Center of Gravity (CG)

A vehicle's center of gravity is an imaginary location inside the vehicle and is a balance point for the vehicle mass as it moves down the road. The police vehicle's center of gravity, before you add a load and passengers, is approximately midway between the center of the axles, up from the ground to just below the front window, and between the driver and passenger.

Equipment location and weight on the vehicle's center of gravity is important to keep in mind when planning an installation. Heavy equipment should be positioned as low and as far forward in the rear load compartment as possible. Try to mount the equipment below the bottom of the side windows.

A procedure to make the necessary measurements and formulas to calculate the vehicle longitudinal, lateral, and vertical position of the center of gravity can be found in the GM Coachbuilders Manual. Equipment required to conduct the measurements for calculating the center of gravity are:

- Weight scales of sufficient capacity to measure the vehicle weight at each wheel.
- A post-type hoist or other means to safely elevate the front of the vehicle to at least an angle of 20 degrees above horizontal.

See your GM dealer to get more information about this coachbuilder procedure.

Keeping the center of gravity midway between the axles is also important to provide proper braking performance. About half the total vehicle weight on each axle is recommended.

Weigh your vehicle after the additional equipment has been installed to determine the actual weight of your vehicle. Weigh the vehicle with a full tank of fuel and without passengers. You may need to put a limit on how many people or other equipment you can carry inside your vehicle after the additional equipment has been installed.

Using heavier suspension components to get added durability might not change your weight ratings. Ask your dealer to help you load your vehicle the right way.

NOT FOR RESALE

Starting and Operating

Stop/Start System

This vehicle is not equipped with a Stop/Start system.

Extended Parking

This vehicle is not equipped with an automatic engine shutdown feature.

Ride Control Systems

Driver Mode Control

Driver Mode Control does not include Sport mode for the Police and Special Service vehicles.

Police and Special Service vehicles may have one additional Driver Mode, Pursuit Mode, that is automatic. The driver does not need to press a button to activate Pursuit mode.

Pursuit Mode

May activate when the vehicle detects continuous high-performance driving. This mode supports extended high-demand driving such as law enforcement pursuits. Pursuit mode modifies steering effort, accelerator and brake pedal tuning, and propulsion control.

Either the Traction Control System (TCS)/Electronic Stability Control Light, the Electronic Stability Control (ESC) Off Light, or both will display in the instrument cluster until Pursuit mode deactivates. The Traction Control System and Stabilitrak/Electronic Stability Control are still functional but operating at a modified level to support high performance driving. See the "Warning Lights, Gauges, and Indicators" section in the owner's manual for additional information on these lights.

Pursuit mode deactivates after high-performance driving is no longer detected, the vehicle remains idling for around an hour, or the vehicle is turned off and on. If Pursuit mode is deactivated by turning the vehicle off and on again, vehicle performance and feel may vary until brakes and powertrain are fully cooled.

NOT FOR RESALE

Vehicle Care

Wheels and Tires
Tires 22
Tire Pressure Monitor System 22
Tightening the Wheel Nuts 23
Tire Changing 23
Appearance Care
Floor Mats 23

Wheels and Tires

Tires

Police and Special Service Package

Refer to the Tire and Loading Information label, on the driver B-pillar, for information regarding tire sizes, speed ratings, and recommended tire inflation pressures. See "Tire and Loading Information Label" under “Vehicle Load Limits” in the owner’s manual.

The Special Service Package is neither designed nor intended for use in high-speed emergency vehicle operations.

Wheels

If the vehicle has metal hub caps, they are bolted to the wheels and do not require removal when rotating or removing the wheels. However, to store a tire underneath the vehicle with the hoist, the hub cap must be removed. See *Tire Changing* ⇨ *23*. Loosening or tightening the decorative wheel attachment nuts can be done with the hub caps in place.

Tire Pressure Monitor System

The Silverado Police and Special Service Package may have a Tire Pressure Monitor System. Sensors are mounted on each tire and wheel assembly. Only the Silverado Police Package (RPO 9C1) has a sensor in the full-size spare tire and wheel assembly. The Tire Pressure Monitor System will not monitor or display the spare tire's air pressure until it is installed onto one of the four tire/wheel positions on your vehicle.

The Silverado Special Service Package may have a full-size spare tire and Tire Pressure Monitor System sensor, Option 00A.

Once installed, the spare tire's sensor code must be matched to its new tire/wheel position on your vehicle. See “Tire Pressure Monitor System” in the owner’s manual.

NOT FOR RESALE

Tightening the Wheel Nuts

Warning

Before deploying a vehicle for police pursuits or track events, ensure the wheel nuts are tightened to the correct torque specification using a torque wrench. Improperly tightened wheel nuts can cause the wheels to become loose or fall off, potentially leading to a crash. Refer to the "Capacities and Specifications" section in the vehicle owner's manual for the proper torque specification.

Tire Changing

To change a tire see "Tire Changing" in the owner's manual. The jack and tools for the police vehicle are stored underneath and behind the driver side second row seat. The police vehicle uses a hub cap that is bolted to the wheel with three bolts. A special socket is required for removal. The hub cap must be removed to store the tire underneath the vehicle using the hoist. Remove the hub cap before removing the tire from the vehicle. To remove the hub cap:

1. Attach the special socket from the tool kit to the end of the wheel wrench.

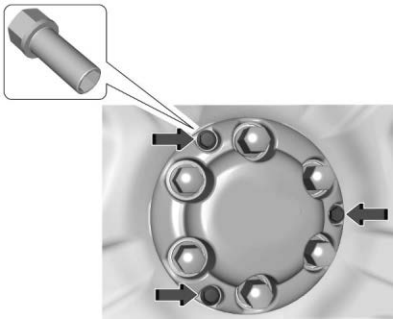

2. Use the wheel wrench to loosen and remove all three hub cap bolts.
3. Remove the hub cap and set aside.

Appearance Care

Floor Mats

Warning

If a floor mat is the wrong size or is not properly installed, it can interfere with the pedals. Interference with the pedals can cause unintended acceleration and/or increased stopping distance which can cause a crash and injury. Make sure the floor mat does not interfere with the pedals.

Proper Use:

- Use only GM-certified floor mats.
- Do not use a floor mat if the vehicle is not equipped with a floor mat retainer on the driver side floor.
- Use the floor mat with the correct side up. Do not turn it over.
- Do not place anything on top of the driver side floor mat.
- Use only a single floor mat on the driver side.

NOT FOR RESALE

See the owner's manual for more floor mat information.

NOT FOR RESALE

Service and Maintenance

Additional Maintenance and Care
Additional Maintenance and Care 25

Additional Maintenance and Care

Your vehicle is an important investment and caring for it properly may help to avoid future costly repairs. The following additional maintenance is required:

Auxiliary Battery

⚠ Warning

WARNING: Battery posts, terminals, and related accessories contain lead and lead compounds, chemicals known to the State of California to cause cancer and birth defects or other reproductive harm. Batteries also contain other chemicals known to the State of California to cause cancer. **WASH HANDS AFTER HANDLING.** For more information go to www.P65Warnings.ca.gov/passenger-vehicle.

See “California Proposition 65 Warning” in the owner’s manual.

⚠ Warning

Batteries have acid that can burn you and gas that can explode. You can be badly hurt if you are not careful. See “Jump Starting - North America” in the owner’s manual for tips on working around a battery without getting hurt.

At each oil change, or every six months, whichever comes first. Test auxiliary battery with the EL-50313 battery tester, or equivalent. Replace battery if necessary.

It is recommended that your dealer perform these services — their trained dealer technicians know your vehicle best. Your dealer can also perform a thorough assessment with a multi-point inspection to recommend when your vehicle may need attention.

NOT FOR RESALE

Index

A

Additional
Maintenance and Care..... 25
Airbags
Deployment Diagrams..... 9
Questions and Answers About Airbags and Specialty Law Enforcement Vehicles..... 6
Airbag System
Customer-Installed Equipment Warning..... 7
Alarm
Content Disable..... 5
Automatic
Door Lock Disable..... 4

C

Canadian Vehicle Owners..... 1
Caution, Danger, and Warning..... 2
Climate Control Systems
Rear..... 18
Cluster, Instrument..... 15
Content Alarm Disable..... 5
Control
of a Vehicle..... 19
Customer-Installed Equipment
Airbag System Warning..... 7

D

Danger, Warning, and Caution..... 2
Deployment Diagrams
Airbag..... 9
Door
Rear Doors..... 4
Driver
Mode Control..... 21
Driving
Vehicle Load Limits..... 19

E

Extended Parking..... 21
Exterior
Lighting Features..... 16

F

Flat Tire
Changing..... 23
Floor Mats..... 23

G

Gauges
Speedometer..... 15

H

Horn..... 13

NOT FOR RESALE

I

Instrument
Cluster... 15
Introduction... 1

K

Keys
Remote Operation... 4
Single Key Random Code System... 3

L

Lighting
Exterior Features... 16
Locks
Automatic Door Disable... 4
Lockout Protection... 4

M

Maintenance and Care
Additional... 25
Modes
Driver Control... 21
Monitor System, Tire Pressure... 22

O

Outlets
Power... 13

P

Parking
Extended... 21
Power
Outlets... 13

Q

Québec Consumer Protection Act Disclosure (Québec Customers Only)... 2
Questions and Answers About Airbags and Specialty Law Enforcement Vehicles... 6

R

Rear
Climate Control System... 18
Doors... 4
Window Inoperative... 5
Remote
Key Operation... 4

S

Specific Cylinder Unit for Single Key - Random Code System... 3
Speedometer... 15
Steering
Wheel Controls... 13
Stop/Start System... 21
Supplement
Using... 2

T

Tires... 22
Changing... 23
Pressure Monitor System... 22
Tightening the Wheel Nuts... 23

U

Using
This Supplement... 2

V

Vehicle
Canadian Owners... 1
Control... 19
Load Limits... 19

W

Warning
Caution and Danger... 2
Wheels
Tightening the Wheel Nuts... 23
Window
Rear Inoperative... 5



27Silverado_Police_Special_Service_Pkg_enUS_20561573A