

LYRIQ
OWNER'S MANUAL

2027



Contents

Introduction 1
Keys, Doors, and Windows 7
Seats and Restraints 34
Storage 81
Instruments and Controls 85
Lighting 122
Infotainment System 131
Climate Controls 162
Driving and Operating 169
Vehicle Care 281
Service and Maintenance 339
Technical Data 345
Customer Information 347
Reporting Safety Defects 357
OnStar 360
Connected Services 365
Index 369

Introduction

California Proposition 65 Warning

WARNING

Operating, servicing and maintaining a passenger vehicle or off-highway motor vehicle can expose you to chemicals including engine exhaust, carbon monoxide, phthalates, and lead, which are known to the State of California to cause cancer and birth defects or other reproductive harm. To minimize exposure, avoid breathing exhaust, do not idle engine except as necessary, service your vehicle in a well-ventilated area and wear gloves or wash your hands frequently when servicing your vehicle. For more information go to www.P65Warnings.ca.gov/passenger-vehicle.

©2026 General Motors LLC. All Rights Reserved.

Introduction





The names, logos, emblems, slogans, vehicle model names, and vehicle body designs appearing in this manual including, but not limited to, GM, the GM logo, the CADILLAC Emblem, CADILLAC, and LYRIQ are trademarks and/or service marks of General Motors LLC, its subsidiaries, affiliates, or licensors.

For vehicles first sold in Canada, substitute the name "General Motors of Canada Company" for Cadillac Motor Car Division wherever it appears in this manual.

This manual describes features that may or may not be on the vehicle because of optional equipment that was not purchased on the vehicle, model variants, country specifications, features/applications that may not be available in your region, or changes subsequent to this publication's release, including changes in standard or optional content.

Refer to the purchase documentation relating to your specific vehicle to confirm the features.

Canadian Vehicle Owners

You can obtain a copy of this guide in French from your dealer, at www.helminc.com, or from the following address:

Propriétaires Canadiens

On peut obtenir un exemplaire de ce guide en français auprès du concessionnaire ou à l'adresse suivante:

Helm, Incorporated
Attention: Customer Service
47911 Halyard Drive
Plymouth, MI 48170
USA

Québec Consumer Protection Act Disclosure (Québec Customers Only)

Information regarding the availability of replacement parts, repair services, and information necessary to maintain or repair our products (applicable to Quebec consumers only).

Pursuant to the Consumer Protection Act (Québec) and the applicable regulation, General Motors of Canada Company does not guarantee the availability of replacement parts or repair services for its products, nor does it guarantee the availability of information necessary to maintain or repair its products. General Motors of Canada Company does offer access to certain automobile data for purposes of diagnostics, maintenance or repair in accordance with section 39.4 of the Consumer Protection Act (Québec).

Danger, Warning, and Caution

Warning messages found on vehicle labels and in this manual describe hazards and what to do to avoid or reduce them.

⚠ Danger

Danger indicates a hazard with a high level of risk which will result in serious injury or death.

⚠ Warning

Warning indicates a hazard that could result in injury or death.

Caution

Caution indicates a hazard that could result in property or vehicle damage.



A circle with a slash through it is a safety symbol which means "Do not," "Do not do this," or "Do not let this happen."

Symbols

Some of the vehicle components and labels use symbols instead of text relating to a specific feature, control, message, gauge, or indicator.

Vehicle Symbol Chart

This chart defines the symbols that may be found on the vehicle.

: Air Conditioning System

: Air Conditioning Refrigerant Oil

: Airbag Readiness Light

: Antilock Brake System (ABS)

: Brake System Warning Light

: Dispose of Used Components Properly

: Do Not Apply High Pressure Water

: Energy Usage and Charge Mode Selection

: Flame/Fire Prohibited

: Flammable

: First Responder

: Forward Collision Alert

: Fuse Block Cover Lock Location

: Fuses

: High Voltage

: ISOFIX/LATCH System Child Restraints

: Keep Fuse Block Covers Properly Installed

: Lane Change Alert

: Lane Departure Warning

: Lane Keep Assist

: Park Assist

: Pedestrian Ahead Indicator

: Power

: Rear Cross Traffic Alert

: Registered Technician

: Remote Start

: Risk of Electrical Fire

: Seat Belt Reminders

: Service Vehicle Soon

: Side Blind Zone Alert

: Tire Pressure Monitor

: Traction Control/StabiliTrak/Electronic Stability Control (ESC)

: Under Pressure

: Vehicle Ahead Indicator

READY : Vehicle Ready

Additional Instructions or Information

The following symbols are used to indicate additional instructions or information.

: Shown when the owner's manual has additional instructions or information.

: Shown when the service manual has additional instructions or information.

: Shown when there is more information on another page — "see page."

Instrument Panel Overview

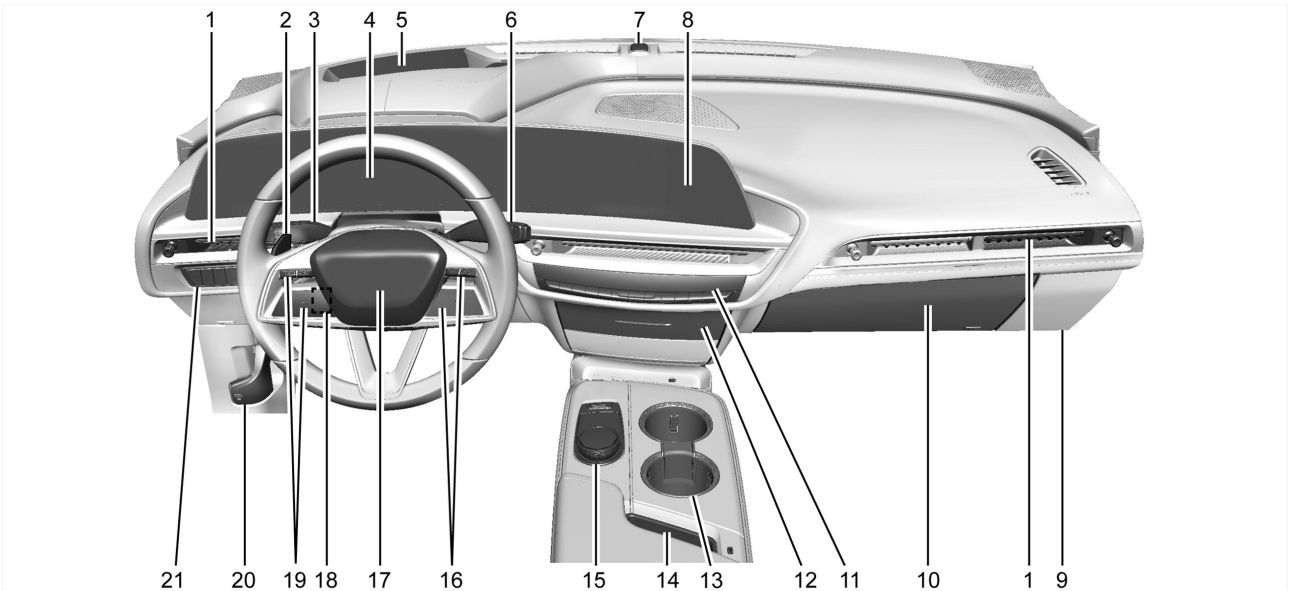

1. Air Vents. See *Air Vents* ⇨ *166*.
2. Regenerative Braking. See *Regenerative Braking* ⇨ *190*
3. Turn Signal Lever. See *Turn and Lane-Change Signals* ⇨ *126*.

Windshield Wiper/Washer. See *Windshield Wiper/Washer* ⇨ *87*.

4. Instrument Cluster. See *Instrument Cluster* ⇨ *93*.
5. Head-Up Display (If Equipped). See *Head-Up Display (HUD)* ⇨ *116*.
6. Shift Lever. See *Electric Drive Unit* ⇨ *183*.
7. Light Sensor. See *Automatic Headlight System* ⇨ *124*.
8. Infotainment Display. See *Using the System* ⇨ *133*.
9. Instrument Panel Fuse Block. See *Instrument Panel Fuse Block* ⇨ *302*.
10. Glove Box. See *Glove Box* ⇨ *81*.
11. Dual Automatic Climate Control System. See *Dual Automatic Climate Control System* ⇨ *162*.
12. Sliding Storage Tray (If Equipped). See *Instrument Panel Storage* ⇨ *81*.
13. Cupholders. See *Cupholders* ⇨ *81*.
14. Wireless Charging. See *Wireless Charging* ⇨ *90*.
15. Infotainment Controls. See *Overview* ⇨ *132*.
16. Radio Controls. See *Steering Wheel Controls* ⇨ *133*.
17. Horn. See *Horn* ⇨ *86*.
18. Steering Wheel Adjustment (Out of View). See *Steering Wheel Adjustment* ⇨ *86*.
19. Adaptive Cruise Control. See *Adaptive Cruise Control (Advanced)* ⇨ *195*.

    Super Cruise (If Equipped). See *Super Cruise* ⇨ *217*.

    Forward Collision Alert System. See *Forward Collision Alert (FCA) System* ⇨ *245*.

    Heated Steering Wheel. See *Heated Steering Wheel* ⇨ *86*.
20. Hood Release. See *Hood* ⇨ *283*.
21. Electric Parking Brake. See *Electric Parking Brake* ⇨ *187*.

    Lane Keep Assist (If Equipped). See *Lane Keep Assist (LKA)* ⇨ *258*.

    Automatic Vehicle Hold Light. See *Automatic Vehicle Hold (AVH) Light* ⇨ *102*.

    Instrument Panel Illumination Control. See *Instrument Panel Illumination Control* ⇨ *126*.

Keys, Doors, and Windows

Keys and Locks
Keys 7
Remote Key 8
Remote Key Operation 8
Remote Start 13
Door Locks 14
Power Door Locks 15
Delayed Locking 15
Automatic Door Locks 15
Lockout Protection 16
Safety Locks 16
Digital Key 16

Doors
Liftgate 18

Vehicle Security
Vehicle Security 23
Vehicle Alarm System 23
Immobilizer Operation 25

Exterior Mirrors
Convex Mirrors 25
Power Mirrors 26
Folding Mirrors 26
Heated Mirrors 27
Reverse Tilt Mirrors 27

Interior Mirrors
Interior Rearview Mirrors 27
Automatic Dimming Rearview Mirror 28
Rear Camera Mirror 28

Windows
Windows 30
Power Windows 30
Sun Visors 31

Roof
Sunroof 32

Keys and Locks

Keys

⚠ Warning

Leaving children in a vehicle with a remote key is dangerous and children or others could be seriously injured or killed. They could operate the power windows or other controls or make the vehicle move. The windows will function with the remote key in the vehicle, and children or others could be caught in the path of a closing window. Do not leave children in a vehicle with a remote key.





Use the mechanical key inside the remote key for all locks.

To remove the mechanical key, press the button on the side of the remote key near the bottom, and pull the mechanical key out. Never pull the mechanical key out without pressing the button.

The mechanical key may have a bar-coded key tag that the dealer or qualified locksmith can use to make new keys. Store this information in a safe place, not in the vehicle.

See your dealer if you need a replacement or additional key.

If it becomes difficult to turn a key, inspect the key blade for debris. Periodically clean with a brush or pick.

With an active OnStar or connected service plan, an OnStar Advisor may remotely unlock the vehicle. See *OnStar Overview* ⇨ *360*.

If locked out of the vehicle, see *Roadside Assistance Program* ⇨ *352*.

Remote Key

If your remote key is not working correctly:

- The remote key may be too far from the vehicle.
- Other vehicles or objects may be blocking the signal.
- The battery may need replacing. See "Battery Replacement" under *Remote Key Operation* ⇨ *8*.

If the remote key is still not working correctly after checking the distance, location, and battery, see your dealer or a qualified technician for service.

Remote Key Operation

The remote key operates various functions from up to 60 m (197 ft) away and includes a mechanical key for locks. See *Keys* ⇨ *7*.



Functions

To view function settings, go to the infotainment app screen and select Settings > Vehicle > Remote Lock, Unlock, Start.

: Press to lock all doors and arm the alarm system. See *Vehicle Alarm System* ⇨ *23*. IF enabled, the turn signals flash.

If you press when the driver door is open and the vehicle is on, all doors will lock and the driver door will immediately unlock.

If you press when the passenger door is open, all doors will lock.

: If enabled, press twice within five seconds and the turn signals flash and the horn sounds to confirm the vehicle is locked.

: Press once to unlock the driver door and disarm the alarm system. See *Vehicle Alarm System* ⇨ *23*.

: Press twice within three seconds to unlock all doors.

If enabled, the turn signal lights flash twice to indicate the doors are unlocked. You can program the remote key to unlock all doors with one press or program the exterior lights to turn on. Follow the onscreen prompts in Settings.

: Press twice to open or close the liftgate. See *Liftgate* ⇨ *18*.

: Press once to stop the liftgate motion.

: Press, hold, and release within one second to initiate the vehicle locator. The exterior lights flash and the horn sounds three times. Press and hold for three seconds to sound the panic alarm.

The horn sounds and the turn signals flash for about 30 seconds or until you press again or start the vehicle.

: Press twice from outside the vehicle to remote start. You cannot start the vehicle if a remote key is left inside. See *Remote Start* ⇨ *13*.

If equipped, you can operate the folding mirrors through the remote key. See *Folding Mirrors* ⇨ *26*.

If equipped, you can express-operate the windows through the remote key. See *Power Windows* ⇨ *30*.

Keyless Access Operation

The Keyless Access system allows you to access the doors, liftgate, and hood without removing the remote key from your pocket or bag. The remote key must be within 1 m (3 ft) of the liftgate, hood, or door being opened.

Keyless Unlocking

Caution
Manually forcing the door handle closed could damage it. Do not close the door handle manually. Allow the handle to electronically retract.

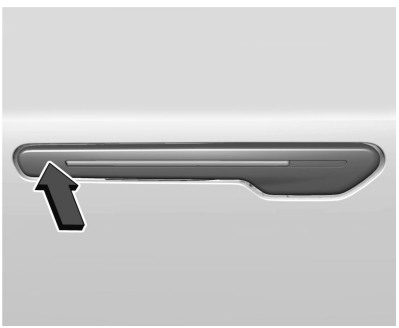

If the door handles are closed, press a front door handle to open all door handles.

When the doors are locked and the driver door handle is open, pull the handle to unlock and unlatch the driver door.

To program all doors to unlock when you pull the driver door handle, on the infotainment app screen, select Settings > Vehicle > Remote Lock, Unlock, Start.

When the doors are locked and the handles are open, pull a passenger handle to unlatch that door and unlock all doors.

Passive Locking

The vehicle locks several seconds after you close all doors, turn the vehicle off, and remove at least one or all remote keys from the interior. If other electronic devices interfere with the remote key signal, the vehicle may not detect the remote key inside the vehicle. If passive locking is enabled, the doors may lock with the remote key inside the vehicle. Do not leave the remote key in an unattended vehicle.

To view available settings from the infotainment app screen, touch Settings > Vehicle > Power Door Locks.

Temporary Disable of Passive Locking

To temporarily disable passive locking, press and hold on the interior door switch with a door open for at least four seconds, or until you hear three audible alerts. Passive locking remains disabled until you press on the interior door or start the vehicle.

Mechanical Key Access

To access a vehicle with the mechanical key in case of a weak remote key battery, see *Door Locks* ⇨ *14*.

Remote Key Alerts

To view available settings for these alerts, on the infotainment app screen, select Settings > Vehicle > Remote Lock, Unlock, Start.

Wireless Charging Error: Placing the remote key on a wireless charger may prompt NO KEY FOUND on the Driver Information Center, and the vehicle may not start. Do not place the remote key on the wireless charger. See *Wireless Charging* ⇨ *90*.

Remote Key Removed From Vehicle Alert: If you turn the vehicle on with a door open, and then close all doors, the vehicle will check for remote keys or digital keys inside. If the vehicle does not detect a remote key or digital key, or you started the vehicle with only a key card present, the Driver Information Center displays NO KEY FOUND and the horn sounds three times. This occurs only once each time you drive the vehicle.

Remote Key Left in Vehicle Reminder: When you turn off the vehicle and leave a remote key inside, the horn sounds three times after you close all doors.

Other conditions can impact the performance of the remote key. See *Remote Key* ⇨ *8*.

Programming Remote Keys to the Vehicle

Only remote keys programmed to the vehicle will work. If a remote key is lost or stolen, a replacement can be purchased and programmed through your dealer. The vehicle can be reprogrammed so that lost or stolen remote keys no longer work. Any remaining remote keys will need to be reprogrammed. Each vehicle can have up to eight remote keys matched to it.

Starting the Vehicle with a Low Remote Key Battery

For improved vehicle security, the remote key is equipped with a motion sensor. If the remote key has been idle for an extended period, when you start the vehicle, the Driver Information Center may display KEY IN SLEEP MODE, MOVE KEY, THEN START. Move the remote key slightly and try starting the vehicle.

If the remote key battery is weak or if there is interference with the signal, when you start the vehicle, the Driver Information Center may display NO KEY FOUND, REPLACE BATTERY IN KEY or NO REMOTE KEY WAS DETECTED PLACE KEY IN KEY POCKET THEN START YOUR VEHICLE.

To start the vehicle:

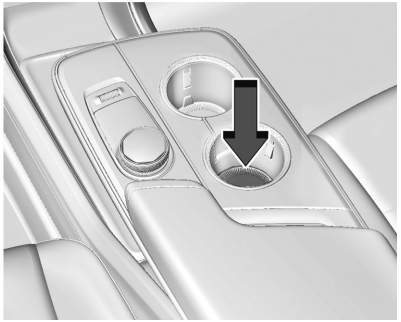

1. Place the remote key in the rear cupholder with the buttons facing down.
2. With the vehicle in P (Park) or N (Neutral), press the brake pedal and start the vehicle. See *Power Modes* ⇨ *181*. Replace the remote key battery as soon as possible.

Battery Replacement

⚠ Warning

Never allow children to play with the remote key. The remote key contains a small battery, which can be a choking

(Continued)

Warning (Continued)

hazard. If swallowed, internal burns can occur, resulting in severe injury or death. Seek medical attention immediately if a battery is swallowed.

⚠ Warning

To avoid personal injury, do not touch metal surfaces on the remote key when it has been exposed to extreme heat. These surfaces can be hot to the touch at temperatures above 59 °C (138 °F).

Caution

When replacing the battery, do not touch any of the circuitry on the remote key. Static from your body could damage the remote key.

Caution

Always replace the battery with the correct type. Replacing the battery with an incorrect type could potentially create a risk of battery explosion. Dispose of used batteries according to instructions and local laws. Do not attempt to burn, crush, or cut the used battery, and avoid exposing the battery to environments with extremely low air pressures or high temperatures.

Caution

If the remote key is not reassembled properly, liquids could enter the housing and damage the circuitry, resulting in a remote key malfunction and/or failure. To prevent damage, always follow the steps for remote key reassembly in this manual to ensure the remote key is sealed properly whenever the remote key is opened.

Replace the battery if the Driver Information Center displays REPLACE BATTERY IN KEY. The battery is not rechargeable.

To replace the battery:



1. Press the button on the side of the remote key near the bottom and pull the mechanical key out. Never pull the mechanical key out without pressing the button.



2. Use the mechanical key blade in the slot to remove the battery cover by hand.

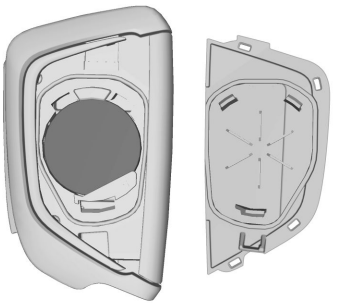

3. Remove the battery cover.

4. Pull the seal by pulling on the tab to access the battery.
5. Remove the old battery. Do not use a metal object.
6. Insert the new battery, positive side facing up. Only Panasonic CR2450 Lithium batteries have been validated to meet GM's minimum performance requirements.
7. Place the seal back into the groove around the battery compartment.
8. Replace the battery cover by snapping it back into the remote key.
9. Reinsert the mechanical key.

Remote Start

This feature starts the heating or air conditioning systems and the rear window defogger from outside the vehicle.

If the outside temperature is below 7 °C (45 °F), and the rear window defogger is on, the area of the windshield beneath the windshield wipers will warm up to melt accumulated snow or ice, if equipped.

Use remote start to heat or cool the interior when the vehicle is plugged in to maximize electric range by utilizing electricity from the electrical outlet. Normal system operation will return after the vehicle has been turned on.

(x2) : This button is on the remote key.

The climate control system will use the previous settings during a remote start. The rear defog may come on during a remote start based on cold ambient conditions. The rear defog indicator light will not come on during a remote start.

Laws in some local communities may restrict the use of remote starters. For example, some laws require a person using remote start to have the vehicle in view. Check local regulations for any requirements.

The vehicle cannot be remote started if:

- The remote key is in the vehicle.
- The total 60 minutes of remote start time has been used.
- The hazard flashers are on.
- The vehicle is not in P (Park).
- The vehicle is already started.

If the battery level is low, do not use the remote start feature. The battery may fully deplete.

The remote key range may be less while the vehicle is running.

Other conditions may affect the range and performance of the remote key. See *Remote Key* ⇨ *8*.

Starting the Vehicle Using Remote Start

Press (x2) twice on the remote key. The turn signal lights will flash to confirm the remote start request was received. During the remote start, the parking lights will remain on as long as the vehicle is on.

The vehicle will turn off after 60 minutes, unless you stop the remote start before remote start cycle has completed or the vehicle is turned on.

To drive, start the vehicle. See *Power Modes* ⇨ *181*.

Extending Remote Start Time

Remote start can be used for up to 60 minutes total.

After a remote start of 60 minutes, or multiple shorter starts totaling 60 minutes, the vehicle must be started and then turned off before the remote start can be used again.

Canceling a Remote Start

To cancel a remote start, do one of the following:

- Press (x2). The parking lights will turn off.
- Turn on the hazard warning flashers.
- Turn the vehicle on and then off.

Door Locks

⚠ Warning

Unlocked doors can be dangerous.

(Continued)

Warning (Continued)

- Passengers, especially children, can easily open the doors and fall out of a moving vehicle. The doors can be unlocked and opened while the vehicle is moving. The chance of being thrown out of the vehicle in a crash is increased if the doors are not locked. So, all passengers should wear seat belts properly and the doors should be locked whenever the vehicle is driven.
- Do not pull the door handles while the vehicle is in motion. The door may open with only a single pull. Always use safety locks when children are in the rear seats. See *Safety Locks* ⇨ *16*.
- Young children who get into unlocked vehicles may be unable to get out. A child can be overcome by extreme heat and can suffer permanent injuries or even death from heat stroke. Always lock the vehicle whenever leaving it.
- Outsiders can easily enter through an unlocked door when you slow down or stop the vehicle. Locking the doors can help prevent this from happening.

To lock or unlock the doors from outside the vehicle:

- Press or on the remote key.
- Use the digital key or key card. See *Digital Key* ⇨ *16*.
- Use the mechanical key in the liftgate to lock and unlock the door without the remote key. See *Liftgate* ⇨ *18*.

To lock or unlock the doors from inside the vehicle:

- Press or on the power door lock switch. See *Power Door Locks* ⇨ *15*.
- Pull the door handle up. It is located on the door trim. Pull a front door handle once to unlock and open it. Pull a rear door handle once to unlock it and again to open it.

Keyless Access

The remote key must be within 1 m (3 ft) of the liftgate or door being opened. Pull on the pivoted handle to open. See “Keyless Access Operation” in *Remote Key Operation* ⇨ *8*.

Opening a Door from the Exterior

The door handles are power operated and cannot be used to open the vehicle unless one of the following occurs:

- The vehicle detects a remote key approaching
- The doors are unlocked
- The deploy switch is pressed and the doors are unlocked
- A door is opened or closed.

The power door handles will remain pivoted outward for a short time, unless the vehicle is locked or begins moving. The timer is reset if any of the conditions listed above are met.

Power Door Locks

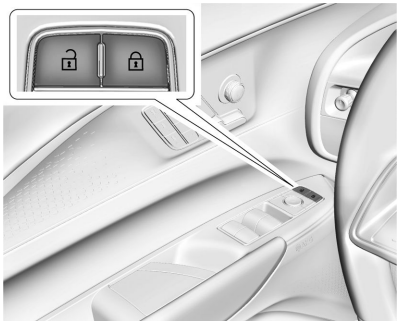

: Press to unlock the doors.

: Press to lock the doors.

Locking and unlocking the doors will also unlock the liftgate. See *Liftgate* ⇨ *18*.

Delayed Locking

This feature delays the locking of the doors for five seconds after they are closed.

When you press on the power door lock switch while the vehicle is off and the door is open, an audible alert will sound three times indicating delayed locking is active.

The doors will lock automatically five seconds after all doors are closed. If you reopen a door before that time, the five-second timer will reset when you close all doors again.

Press on the door lock switch again or press on the remote key to lock the doors immediately.

To view available settings, from the app screen on the infotainment display, select Settings > Vehicle > Power Door Locks.

Automatic Door Locks

The doors lock automatically when you close all the doors, turn the vehicle on, and shift out of P (Park).

If a door is unlocked, opened, and then closed, the doors will lock when you either remove your foot from the brake or drive faster than 13 km/h (8 mph).

To unlock the doors:

- Press on the power door lock switch.
- Shift into P (Park).

Automatic door locking cannot be disabled. Automatic door unlocking can be disabled or programmed to unlock all doors or only the

driver door. To view available settings from the app screen on the infotainment display, select Settings > Vehicle > Power Door Locks.

Lockout Protection

This feature protects you from locking remote keys in the vehicle.

When the lock button is pressed and the vehicle is on, with the driver door open, all of the doors will lock and then the driver door will unlock.

If the vehicle is off and locking is requested while a door is open, when all doors are closed the vehicle will check for remote keys inside. If a remote key is detected and the number of remote keys inside has not reduced, the driver door will unlock and the horn will sound three times.

This can be manually overridden by pressing and holding on the power door lock switch.

Safety Locks

Child Safety Locks prevent passengers from opening the rear doors from inside the vehicle.

To activate/deactivate the safety locks from the infotainment app screen, select one of the following pathways:

- Controls > Child Safety Locks > On or Off
- Controls > See More Controls > Doors & Windows > Child Safety Locks > On or Off

Digital Key

If equipped and enabled, the digital key feature allows you to access and operate the vehicle using a smart device. Many of the functions performed by a remote key can also be done using a digital key. See *Remote Key Operation* ⇨ *8*.

Bring your remote key to all service appointments at your dealer.

Digital key communicates with the vehicle using Ultrawide Band and Bluetooth Low Energy technology.

Only certain iPhone, Apple Watch, and Android smart devices support digital key. Please see the myCadillac app or www.cadillac.com/support to see if your smart device is compatible.

If the smart device battery is weak or if there is interference with the signal, the Driver Information Center may display NO KEY FOUND or NO REMOTE KEY WAS DETECTED, PLACE KEY IN KEY POCKET THEN START YOUR VEHICLE when starting the vehicle. Charge the smart device battery as soon as possible.

You can use the myCadillac mobile app and device Wallet to pair, manage, or delete your digital key.

If the digital key is not working:

- Check the distance. The smart device may be too far from the vehicle.
- Check the location. Other vehicles or objects may be blocking the signal. Your body could also impact the signal. Hold the smart device in your hand, away from your body, and toward the vehicle for best results.
- Check that the smart device is turned on and has sufficient battery power.
- Check the connection. Your smart device's Bluetooth connection must be enabled.
    - If it is enabled, try to turn Bluetooth off, then back on.

- Check that your smart device has the latest iOS or Android operating system (OS) downloaded.
- Go to www.cadillac.com/support for additional support and frequently asked questions.

If the digital key still does not work, use the key card or the commands in your phone's Wallet or myCadillac app as a backup.

Bring your remote key and key card if you have the digital key serviced at your dealer.

Setting up Digital Key

Digital key is only available if you have accepted the OnStar terms and conditions.

1. Log in to your OnStar account in the myCadillac mobile app.
2. Select Controls > Keys, then follow the steps on your screen to pair your smart device.

Using Your Digital Key

Digital key allows you to:

- Use passive entry with your smart device to lock and unlock the vehicle's doors, and access the rear compartments without a remote key.

  See "Keyless Access Operation" under *Remote Key Operation* ⇨ *8*.
- Start the vehicle with just your digital key-enabled smart device present.
- Use remote commands in the device Wallet to lock, unlock, and remote start the vehicle.
- Share your digital key with up to three additional people across eight total devices.

Delete keys through the device Wallet or call an OnStar advisor for assistance.

Key Card

Caution
Placing the key card on the wireless charger may damage the card. If the key card is damaged, it may not unlock or start the vehicle. Do not place the key card on the wireless charger.

Your vehicle may be equipped with a key card that unlocks, locks, and starts the vehicle. The key card works by tapping it on the location of the vehicle shown on the back of the key card.

The key card is a back up to the digital key in case the smart device battery is weak or there is interference to the signal. Carry the key card at all times. Store the key card securely to prevent loss, theft, or damage. Do not write or punch holes into the key card.

Only key cards programmed to the vehicle will work. If you lose your key card or it is stolen, you can purchase and program a replacement through your dealer. To prevent lost or stolen key cards from being able to operate the vehicle, see your dealer. Bring your remote key and digital key if you have the key card serviced at your dealer.

Each vehicle can have up to eight key cards programmed to it.

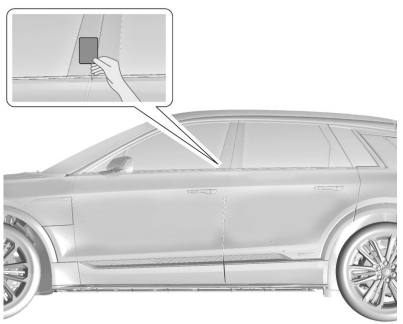

Unlocking with the Key Card

Tap your key card on the rectangular symbol on the driver door near the edge of the window to unlock the driver door. To program the key card to unlock all doors, on the infotainment app screen, select Settings > Vehicle > Remote Lock, Unlock, Start > Remote Door Unlock.

Locking with the Key Card

With all doors closed, the vehicle off, and any door unlocked, tap your key card on the rectangular symbol on the driver door near the edge of the window to lock all doors.

Starting with the Key Card

You can start your vehicle for a short period after unlocking it with your key card. If the period has ended, you will need to unlock the vehicle with the key card again to start your vehicle.

Doors

Liftgate

Caution
To avoid damage to the liftgate or liftgate glass, make sure the area above and behind the liftgate is clear before opening it.

To lock or unlock the liftgate from the outside, press or on the remote key.

To lock or unlock the liftgate from the inside, press or on the power door lock switch.

Power Liftgate Operation

⚠ Warning
You or others could be injured if caught in the path of the power liftgate. Make sure there is no one in the way of the liftgate as it is opening and closing.

Caution
Driving with an open and unsecured liftgate may result in damage to the power liftgate components.

Power Liftgate Settings

To view available settings from the app screen on the infotainment display, select Settings > Vehicle > Comfort and Convenience > Power Rear Gate Opening.

Choose from the following settings:

Maximum: Opens to the maximum height.

Custom: Opens to a reduced height that can be set between a programmed height and fully open. See “Setting the Custom Opening Height” later in this section.

Use to prevent the liftgate from opening into overhead obstructions, such as a garage door or roof-mounted cargo. The liftgate can be manually opened all the way.

Off: Opens manually only.

To open or close the liftgate using the remote key, press x2 twice quickly until the liftgate moves.

Operating the Power Liftgate from the Inside



To open or close the liftgate from the inside, press .

Keyless Liftgate Opening

Caution
Manually operating the liftgate during a power open or close can damage the liftgate system. Always wait for the power operation to complete before manually operating the liftgate.

To open the liftgate:

- If the doors are locked, the remote key must be within 1 m (3 ft)
- If the doors are unlocked, the remote key is not required to open the liftgate

Press the Cadillac emblem to power open the liftgate when the power liftgate mode is set to Maximum or Custom.

Press the Cadillac emblem and lift to open when the power liftgate mode is set to Off.

See “Power Liftgate Mode Selection” earlier in this section.



To open the liftgate, press the Cadillac emblem.



When closing the liftgate, press the button on the bottom of the gate.

Press any liftgate button, the Cadillac emblem, or on the remote key while the liftgate is moving to stop it.

Pressing any liftgate button or pressing twice quickly on the remote key restarts the operation in the reverse direction. Pressing the Cadillac emblem will restart the motion, but only in the opening direction.

The power liftgate may be temporarily disabled in extremely low temperatures, or after repeated opening and closings over a short period of time. If this occurs, the liftgate can still be operated manually.

If the vehicle is shifted out of P (Park) while the power liftgate operation is in progress, the operation will continue to completion. If the vehicle is driven before the liftgate has completed moving, the liftgate may stop or reverse direction. Check for Driver Information Center messages, and make sure that the liftgate is closed and latched before driving.

Falling Liftgate Detection

If the power liftgate automatically closes after a power opening cycle, it indicates that the system is reacting to excess weight on the liftgate or a possible support strut failure. An audible alert will sound while the falling liftgate detection feature is operating. Remove any excess weight. If the liftgate continues to automatically close after opening, see your dealer for service before using the power liftgate.

Interfering with the power liftgate motion or manually closing the liftgate too quickly after power opening may resemble a support strut failure. This could also activate the falling liftgate detection feature. Allow the liftgate to complete its operation and wait a few seconds before manually closing the liftgate.

Obstacle Detection Features

If the liftgate encounters an obstacle during a power open or close cycle, the liftgate will automatically reverse direction and move a short distance away from the obstacle. After removing the obstruction, the power liftgate operation can be used again. If the liftgate encounters multiple obstacles on the same power cycle, the power function will deactivate. After removing the obstructions, manually close the liftgate. This will allow normal power operation functions to resume.

If the vehicle is locked while the liftgate is closing, and an obstacle is encountered that prevents the liftgate from completely closing, the horn will sound as an alert that the liftgate did not close.

Setting the Custom Opening Height

To change the position the liftgate stops at when opening:

1. Select MAX or Custom mode and power open the liftgate.
2. Stop the liftgate movement at the desired height by pressing any liftgate button. Manually adjust the liftgate position if needed.
3. Press and hold on the bottom edge of the liftgate next to the latch on the outside of the liftgate until the turn signals flash and an audible alert sounds. This indicates the setting has been recorded.

The liftgate cannot be set below a minimum programmable height. If there is no light flash or audible alert, then the height adjustment may be too low.

Liftgate Key Lock Cylinder Access (In Case of Dead Battery)



To access the liftgate key lock cylinder, insert the mechanical key into the cylinder and turn to unlock. See *Keys* ⇨ 7.

Free-Turning Locks

The key cylinder turns freely when either the wrong key is used, or the correct key is not fully inserted. The free-turning lock feature prevents the lock cylinder from being forced open. To reset the lock cylinder, ensure the correct key is fully inserted into the lock cylinder and then rotate the key until you feel the lock cylinder click back into place. Remove the key and reinsert fully. Rotate the key to unlock the vehicle.

Hands-Free Operation

If equipped, the liftgate may be operated with a kicking motion near the center of the rear bumper at the location of the projected logo.

The remote key must be within 1 m (3 ft) of the rear bumper to operate the power liftgate hands-free.

The hands-free feature will not work while the liftgate is moving. To stop the liftgate while in motion use one of the liftgate switches.

The hands-free feature can be customized. To view available settings for this feature, from the app screen on the infotainment display, select Settings > Vehicle > Comfort and Convenience. Choose from the following:

On-Open and Close: The kicking motion is activated to both open and close the liftgate.

On-Open Only: The kicking motion is activated to only open the liftgate.

Off: The feature is disabled.

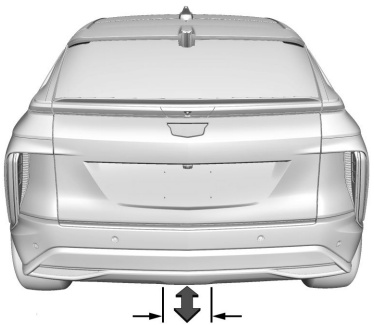

Kick Zone

To operate, move your foot in a forward kicking motion under the left side of the rear bumper, at the location of the projected logo, then pull it back. Then step back. The kick must come within 14 cm (6 in) of the rear bumper to activate.

- Do not sweep your foot side to side.
- Do not keep your foot under the bumper; the liftgate will not activate.
- Do not touch the liftgate until it has stopped moving.
- This feature may be temporarily disabled under some conditions. If the liftgate does not respond to the kick, open or close the liftgate by another method or start the vehicle. The feature will be re-enabled.

When closing the liftgate using this feature, there will be a short delay. The taillights will flash and a chime will sound. Step away from the liftgate before it starts moving.

Projected Logo

If equipped, a vehicle logo will be projected for one minute onto the ground near the rear bumper when a remote key is detected within approximately 2 m (6 ft) from the rear bumper. The projected logo may not be visible under brighter daytime conditions.

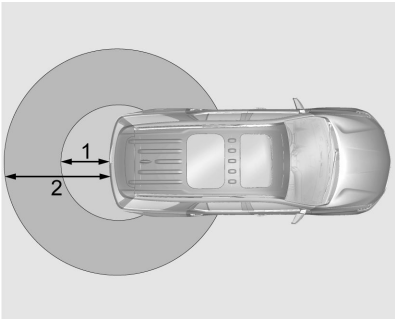

1. 1 m (3 ft) Hands-Free Operation Detection Zone
2. 2 m (6 ft) Projected Logo Detection Zone

The projected logo shows where to kick toward the rear bumper.

The projected logo will not be restarted using the same remote key unless it has been out of range for longer than 20 seconds.

If a remote key is again detected within approximately 2 m (6 ft) of the liftgate, or another kick has been detected, the one-minute timer will be reset.

The projected logo will not work under these conditions:

- The vehicle battery is low.
- The vehicle is not in P (Park).
- Hands Free Liftgate/Trunk Control is set to Off in vehicle personalization. To view available settings for this feature, from the app screen on the infotainment display, select Settings > Vehicle > Comfort and Convenience.
- Power liftgate is turned off.
- The vehicle remains parked for 72 hours or more, with no remote key use or Keyless Access operation. To re-enable, press any button on the remote key or open and close a vehicle door.

The projected logo will not work for a single remote key when a remote key:

- Has been left within approximately 5 m (15 ft) of the liftgate for several minutes.
- Has been left inside the vehicle and all vehicle doors are closed.
- Has approached the area outside of the liftgate five times within 10 minutes.

Lens Cleaning

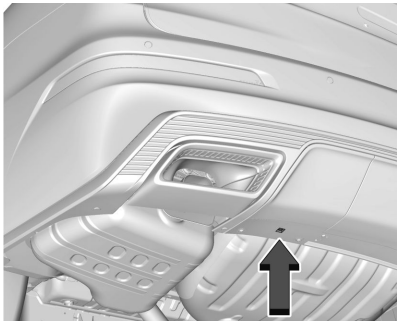

If equipped, use a soft clean cloth to clean the lens.

Hands-Free Liftgate and Projected Logo Availability

Action	Hands-Free Liftgate	Projected Logo
Remote key entering projected logo detection zone	Operative	On for one minute
Remote key left inside projected logo detection zone for minimum of 10 minutes	Operative	Off until remote key button press or a door is opened and closed
Remote key brought in and out of projected logo detection zone five times or more within 10 minutes	Operative	Off for one hour or until remote key button press or a door is opened and closed
Vehicle remains parked for more than 72 hours	Operative	Off until remote key button press or a door is opened and closed
Vehicle battery is low	Non-operative	Off
Vehicle is not in P (Park)	Non-operative	Off
Power liftgate is turned off	Non-operative	Off
Hands-free liftgate is disabled in vehicle personalization	Non-operative	Off

Vehicle Security

This vehicle has theft-deterrent features, but is not theft-proof.

Vehicle Alarm System

Arming the Alarm System

1. Turn off the vehicle.
2. Lock the vehicle in one of three ways:
   - Use the remote key.
   - Use the Keyless Access system.
   - With a door open, press on the interior of the door.

3. After 30 seconds the alarm system will arm, and the indicator light will begin to slowly flash. If equipped, press on the remote key a second time will bypass the 30-second delay and immediately arm the alarm system.

The alarm will be activated if a door, the rear access, or the hood is opened without first disarming the system. When the alarm is activated, the lights flash and the horn sounds. The alarm system will then re-arm to monitor for the next unauthorized event.

Disarming the Alarm System

To disarm the alarm system or turn off the alarm if it has been activated:

- Press on the remote key.
- Unlock the vehicle using the Keyless Access system.
- Start the vehicle.

To avoid setting off the alarm by accident:

- Lock the vehicle after all occupants have exited.
- Always unlock a door with the remote key, or use the Keyless Access system.
- If equipped, if the driver door is opened without first unlocking with the remote key, the horn will chirp and the lights will flash to indicate pre-alarm. If the vehicle is not started, or the door is not unlocked by pressing on the remote key during the 10-second pre-alarm, the alarm will be activated.

Detecting a Tamper Condition

If you press on the remote key and the lights flash and horn sounds three times, an alarm occurred previously while the system was armed.

If the alarm has been activated, a message will appear on the Driver Information Center.

Power Sounder and Inclination/ Intrusion Sensors

In addition to the standard theft-deterrent system features, this system may also have an inclination/intrusion sensor.

The power sounder provides an audible alarm which is distinct from the vehicle horn. It has its own power source and can sound an alarm if the vehicle's battery is compromised.

The inclination/intrusion sensor can set off the alarm if it senses movement inside the vehicle or a change in vehicle orientation.

The inclination/intrusion sensor monitors the vehicle interior and can activate the alarm if it senses unauthorized entry into the vehicle interior. Do not allow passengers or pets to remain in the vehicle when the sensor is activated.

Before arming the theft-deterrent system and activating the sensor:

- Make sure all doors and windows are completely closed.
- Secure any loose items such as a sunshades.
- Make sure there are no obstructions blocking the sensor in the front overhead console.

Deactivating the Inclination/ Intrusion Sensor

It is recommended that the inclination/ intrusion sensor is deactivated if pets are left in the vehicle or the vehicle is being transported.

To deactivate the inclination/intrusion sensor, the app screen on the infotainment display, select the Controls icon > Motion Sensor or

Controls icon > See More Controls > Drive & Park > Motion Sensor. The motion sensor will remain deactivated for one alarm cycle.

The indicator light may come on momentarily, or a message may display on the instrument cluster, indicating that the sensor has been deactivated until the next time the system is armed.

Immobilizer Operation

This vehicle has a passive theft-deterrent system.

The system does not have to be manually armed or disarmed.

The vehicle is automatically immobilized when the vehicle is turned off.

The immobilization system is disarmed when the vehicle is turned on and a valid remote key is present in the vehicle.



The security light, in the instrument cluster, comes on if there is a problem with arming or disarming the theft-deterrent system.

The system has one or more remote keys matched to an immobilizer control unit in the vehicle. Only a correctly matched remote key will start the vehicle. If the remote key is ever damaged, you may not be able to start your vehicle.

When trying to start the vehicle, the security light may come on briefly.

If the vehicle does not start and the security light stays on, there is a problem with the system. Turn the vehicle off and try again.

If the vehicle will not turn on or off, and the remote key appears to be undamaged, try another remote key. Or, you may try placing the remote key in the backup location. See "Starting the Vehicle with a Low Remote Key Battery" in *Remote Key Operation* ⇨ *8*.

If the vehicle will not turn on or off with the other remote key or in the backup location, the vehicle needs service. If the vehicle does turn on or off, the first remote key may be faulty. See your dealer.

It is possible for the immobilizer system to learn new or replacement remote keys. Up to eight remote keys can be programmed for the vehicle. To program additional remote keys, see "Programming Remote Keys to the Vehicle" under *Remote Key Operation* ⇨ *8*.

Do not leave the remote key or device that disarms or deactivates the theft-deterrent system in the vehicle.

Exterior Mirrors

Convex Mirrors

⚠ Warning

A convex mirror can make things, like other vehicles, look farther away than they really are. If you cut too sharply into the right lane, you could hit a vehicle on the right. Check the inside mirror or glance over your shoulder before changing lanes.

Convex mirrors are curved so that more can be seen from the driver seat.

The passenger side mirror is convex shaped.

Do not spray glass cleaner or chrome cleaner directly on the mirror. Use a soft towel dampened with water.

Power Mirrors



To adjust the mirrors:

1. Press or to choose the driver or passenger mirror. An indicator will show the selected mirror.
2. Press one of the four arrows on the control pad while the indicator light on button or is illuminated, to move the mirror in the desired direction.
3. Adjust each outside mirror so that a little of the vehicle and the area behind it can be seen.
4. Press or again to deselect the mirror. If you do not deselect the mirror, the mirror adjustment will turn off after about one minute.

Folding Mirrors

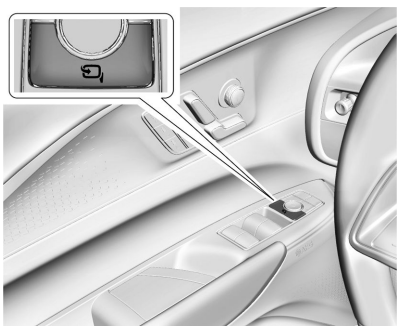

To adjust power folding mirrors:

1. Press to fold the mirrors inward.
2. Press again to return the mirrors to the driving position.

The outside mirrors may automatically unfold when the vehicle is driven above 20 km/h (12 mph), but may be folded with the power folding mirror switch. If the vehicle speed is driven above 40 km/h (25 mph), they may automatically unfold and may not be refolded with the power folding mirror switch.

Resetting the Power Folding Mirrors

Reset the power folding mirrors if:

- The mirrors are accidentally obstructed while folding.
- They are accidentally manually folded/unfolded.
- The mirrors do not stay in the unfolded position.
- The mirrors vibrate at normal driving speeds.
- One mirror folds while the other unfolds.

Fold and unfold the mirrors one time using the mirror controls to reset them to their normal position. A noise may be heard during the resetting of the power folding mirrors. This sound is normal after a manual folding operation.

If one mirror folds while the other unfolds, fold and unfold the mirrors three times using the mirror controls to reset them to their normal position. A noise may be heard during the resetting of the power folding mirrors. This sound is normal after a manual folding operation.

Remote Mirror Folding

If the mirrors have been folded with the power folding mirror switch, they may not be unfolded by use of remote key.

If the mirrors have not been folded with the power folding mirror switch and the vehicle is in P (Park), they may be automatically folded/unfolded as follows:

- If doors are locked by pressing on the remote key, the mirrors will fold. If doors are unlocked by pressing on the remote key, the mirrors will unfold. See *Remote Key Operation* ⇨ *8*.
- If doors are locked by pressing the door handle button, the mirrors will fold. If doors are unlocked by pressing the door handle button, the mirrors will unfold. See "Keyless Unlocking/Locking from the Driver Door" in *Remote Key Operation* ⇨ *8*.
- If passive locking is enabled and doors are locked by that feature, the mirrors will fold. See "Passive Locking" in *Remote Key Operation* ⇨ *8*.

Lane Change Alert (LCA)

The vehicle may have LCA. See *Lane Change Alert (LCA)* ⇨ *253*.

Turn Signal Indicator

The vehicle may have a turn signal indicator on the mirror housings. The indicator will flash when a turn signal or the hazard warning flashers are used.

Heated Mirrors

If equipped with heated mirrors, is present on both side mirrors. The symbol does not illuminate when the heated mirrors are active.

The rear window defogger also heats the outside mirrors.

REAR : Press to heat the outside rearview mirrors. See "Rear Window Defogger" under *Dual Automatic Climate Control System* ⇨ *162*.

Reverse Tilt Mirrors

If equipped with reverse tilt mirrors and memory seats, the passenger and/or driver mirror tilts to a preselected position when the vehicle is in R (Reverse). This allows the curb to be seen when parallel parking.

The mirror(s) may move from their tilted position when:

- The vehicle is shifted out of R (Reverse) or remains in R (Reverse) for about 30 seconds.
- The vehicle is turned off.
- The vehicle is driven in R (Reverse) above a set speed.

To view available settings from the infotainment app screen, touch Settings > Vehicle > Comfort and Convenience.

Interior Mirrors

Interior Rearview Mirrors

Adjust the rearview mirror for a clear view of the area behind your vehicle.

Do not spray glass cleaner directly on the mirror. Use a soft towel dampened with water.

Automatic Dimming Rearview Mirror

If equipped, automatic dimming reduces the glare of headlights from behind. The dimming feature comes on when the vehicle is started.

Rear Camera Mirror

⚠ Warning

The Rear Camera Mirror (RCM) has a limited view. Portions of the road, vehicles, and other objects may not be seen. Do not drive or park the vehicle using only this camera. Objects may appear closer than they are. Check the outside mirrors or glance over your shoulder when making lane changes or merging. Failure to use proper care may result in injury, death, or vehicle damage.

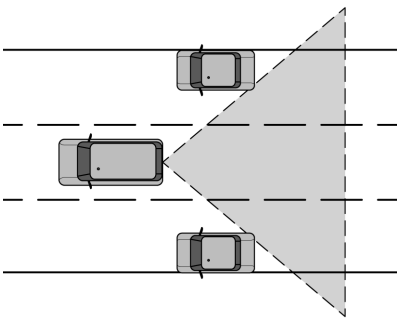

If equipped, this automatic dimming mirror provides a wide angle camera view of the area behind the vehicle.

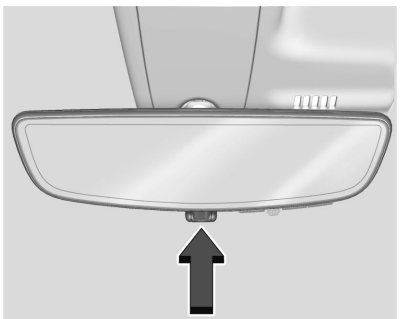

Pull the tab to turn on the display. Push the tab to turn it off. When the display is off, the mirror is automatic dimming. Adjust the mirror for a clear view of the area behind the vehicle while the display is off.

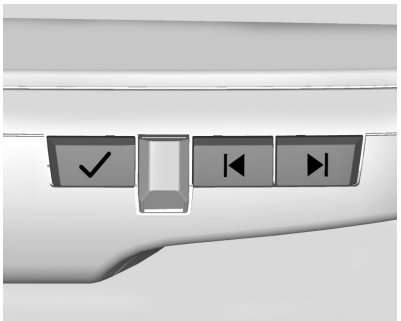

Press ✓ to scroll through the adjustment options.

Press ⏮ and ⏭ to adjust the settings using the indicators on the mirror. The indicators will remain visible for five seconds after the last button activation, and the settings will remain saved.

The adjustment options are:

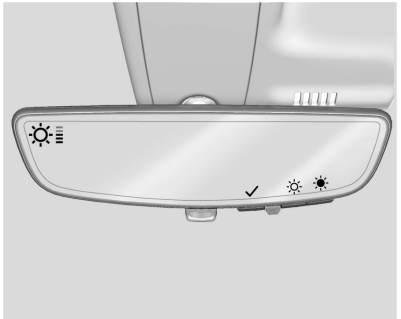

- Brightness

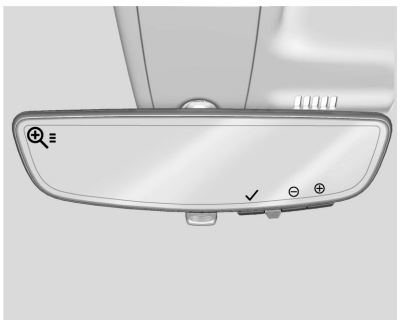

- Zoom

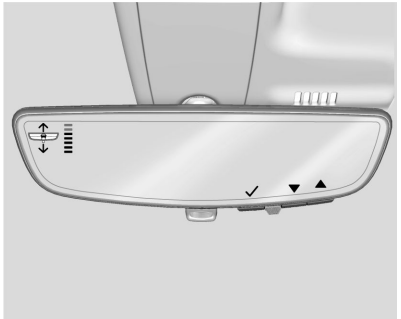

- Tilt

Troubleshooting

See your dealer for service if a blue screen and are displayed in the mirror, and the display shuts off. Also, push the tab as indicated to return to automatic dimming.

The Rear Camera Mirror may not work properly or display a clear image if:

- There is glare from the sun or headlights. This may obstruct objects from view. If needed, push the tab to turn off the display.
- Dirt, snow, or other debris blocks the camera lens. To clean the rear camera, see *Windshield Wiper/Washer* ⇨ *87* or clean the lens with a soft damp cloth.



- The camera's mounting on the vehicle has been damaged, and/or the position or the mounting angle of the camera has changed.

Windows

⚠ Warning

Never leave a child, a helpless adult, or a pet alone in a vehicle, especially with the windows closed in warm or hot weather. They can be overcome by the extreme heat and suffer permanent injuries or even death from heat stroke.



The vehicle aerodynamics are designed to improve electric range performance. This may result in a pulsing sound when either rear window is down and the front windows are up. To reduce the sound, open either a front window or the sunroof, if equipped.

Power Windows

⚠ Warning

Children could be seriously injured or killed if caught in the path of a closing window. Never leave the remote key in a vehicle with children. When there are children in the rear seat, use the window lockout switch to prevent operation of the windows. See *Keys* ⇨ 7.



The power windows work with the vehicle on.

Using the window switch, press to open or pull to close the window.

The windows may be temporarily disabled if they are used repeatedly within a short time.

Window Lockout

This feature prevents the rear seat passengers from opening the rear windows.

If equipped, to enable or disable this feature from the app screen on the infotainment display, select Controls > Power Window Lockout.

Window Express Movement

This feature allows you to open all windows fully without holding the switches down. Press the switch down fully, then release to express open the window.

If equipped, pull the window switch up fully and quickly release to express close the window.

Briefly press or pull the window switch in the same direction to stop that window's express movement.

Window Automatic Reversal System

If equipped, the window automatic reversal system reverses and stops window movement if it detects an object in its path. Extreme cold or ice may cause the window to auto-reverse. The window will operate normally after the object or condition is removed.

Automatic Reversal System Override

⚠ Warning

If automatic reversal system override is active, the window will not reverse automatically. You or others could be injured and the window could be damaged. Before using automatic reversal system override, make sure that all people and obstructions are clear of the window path.

If conditions prevent the window from closing, when the vehicle is on, override the automatic reversal system by pulling and holding the window switch.

Programming the Power Windows

If the battery is disconnected or discharged, programming may be necessary. To program an express-close window:

1. Close all doors.
2. Turn the vehicle on.
3. Partially open the window you want to program, then close it and continue to pull the switch briefly after the window has fully closed.
4. Open the window and continue to press the switch briefly after the window has fully opened.

Remote Window Operation

If equipped and enabled, this feature allows you to open all the windows remotely.

To view available settings and enable Remote Window Operation, from the app screen on the infotainment display, select Settings > Vehicle > Remote Lock, Unlock, Start.

To open the windows remotely, press twice and hold on the remote key.

If equipped, you can close all windows using the remote key. To close all windows remotely, press twice and hold on the remote key.

Sun Visors

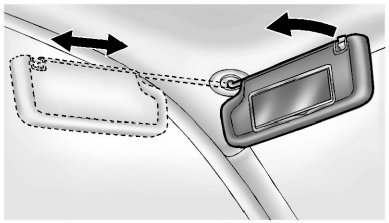

The driver and passenger sun visors block direct sunlight and reduce glare. If equipped, detach and pivot from the center mount to the side window, or extend along the rod for better coverage.

If equipped, swing the visor downward to access card holders or the vanity mirror.

Roof

Sunroof



1. Sunroof Switch
2. Sunshade Switch

If equipped, the sunroof only operates when the vehicle is on or in Service Mode or when Retained Accessory Power is active. See *Power Modes* ⇨ *181*.

Sunroof Switch Express-Open/Express-Close : To express-open the sunroof, fully press and release (1). Press the switch again to stop it. To express-close the sunroof, fully press and release (1). Press the switch again to stop it.

If a roof rack is installed, the sunroof may not be able to open or close. To prevent damage to the sunroof, do not continually try to open or close the sunroof while the roof rack is present.

Open/Close (Manual Mode) : To open the sunroof, press and hold (1) until the sunroof reaches the desired position. Press and hold (1) to close it.

Vent : From the closed position, press (1) to vent the sunroof.

Sunshade Switch Express-Open/Express-Close : To express-open the sunshade, fully press and release (2). To express-close the sunshade, fully press and release (2). Press the switch again to stop it.

Open/Close : To open the sunshade, press and hold (2) until the sunshade reaches the desired position. Press (2) to close the sunshade.

When the sunroof is opened, an air deflector will automatically raise. The air deflector will retract when the sunroof is closed.

Comfort Position

For some models, wind noise is lowest when the sunroof is not fully open. For these models, the automatic operation will initially open the sunroof to a comfort position.

Automatic Reversal System

The sunroof has an automatic reversal system that is only active when the sunroof is operated in express-close mode.

If an object is detected while express-closing, the reversal system will stop and slightly reopen the sunroof.

In the event of closing difficulties like frost or other conditions, it is possible to override the reversal system. To override the reversal system, close in manual mode. To stop the movement, release the switch.

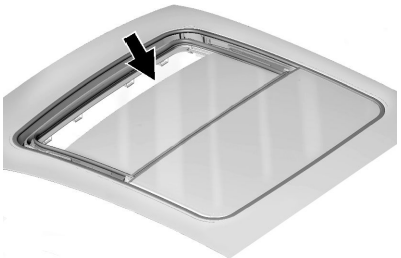

Dirt and debris may collect on the sunroof seal or in the track. This could cause an issue with sunroof operation or noise. It could also plug the water drainage system.

Periodically open the sunroof and remove any obstacles or loose debris. Wipe the sunroof seal and roof sealing area using a clean cloth, mild soap, and water. Do not remove grease from the sunroof.

Seats and Restraints

Head Restraints
Head Restraints 35

Front Seats
Power Seat Adjustment 36
Reclining Seatbacks 36
Lumbar Adjustment 37
Massage 38
Memory Seats 38
Heated and Ventilated Front Seats 41

Rear Seats
Rear Seat Reminder 42
Rear Seats 42
Heated Rear Seats 45

Seat Belts
Seat Belts 45
Buckle To Drive 46
How to Wear Seat Belts Properly 47
Lap-Shoulder Belt 49
Seat Belt Use During Pregnancy 51
Seat Belt Extender 52
Safety System Check 52
Seat Belt Care 52
Replacing Seat Belt System Parts After a Crash 53

Airbag System
Airbag System 53
Where Are the Airbags? 54
When Should an Airbag Inflate? 56
What Makes an Airbag Inflate? 57
How Does an Airbag Restrain? 57
What Will You See After an Airbag Inflates? 57
Passenger Sensing System 58
Servicing the Airbag-Equipped Vehicle 62
Adding Equipment to the Airbag-Equipped Vehicle 62
Airbag System Check 63
Replacing Airbag System Parts After a Crash 63

Child Restraints
Older Children 63
Infants and Young Children 65
Child Restraint Systems 67
Where to Put the Restraint 69
Lower Anchors and Tethers for Children (LATCH System) 70
Replacing LATCH System Parts After a Crash 76
Securing Child Restraints (With the Seat Belt in the Rear Seat) 76
Securing Child Restraints (With the Seat Belt in the Front Seat) 78

Head Restraints

Front Seats

⚠ Warning

With head restraints that are not installed and adjusted properly, there is a greater chance that occupants will suffer a neck/spinal injury in a crash. Do not drive until the head restraints for all occupants are installed and adjusted properly.

The front seats have adjustable head restraints in the outboard seating positions.



Adjust the head restraint so that the top of the restraint is at the same height as the top of the occupant's head. This position reduces the chance of a neck injury in a crash.

The height of the head restraint can be adjusted.

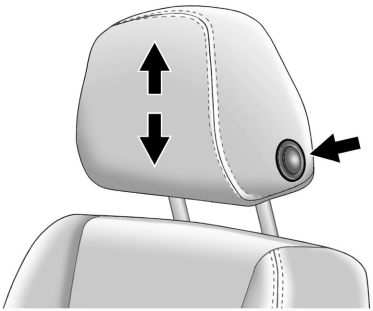

To raise or lower the head restraint, press the button located on the side of the head restraint, and pull up or push the head restraint down, and release the button. After releasing the button, ensure the head restraint locks in place and is unable to move up or down.

The front seat outboard head restraints are not removable.

Rear Seats

Adjusting the Rear Head Restraint

The rear seat has adjustable head restraints in all three seating positions.

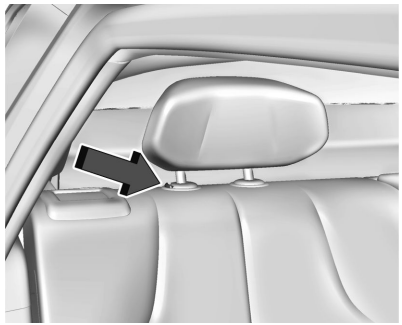

The height of the head restraint can be adjusted.

Pull the head restraint up to raise it. Try to move the head restraint to make sure that it is locked in place.

To lower the head restraint, press the button, located on the top of the seatback, and push the head restraint down. After releasing the button, ensure the head restraint locks in place and is unable to move up or down.

Always adjust the head restraint so that the top of the restraint is at the same height as the top of the occupant's head.

The rear outboard head restraints are not removable.

Front Seats

Power Seat Adjustment

⚠ Warning

You can lose control of the vehicle if you try to adjust a driver seat while the vehicle is moving. Adjust the driver seat only when the vehicle is not moving.

⚠ Warning

The power seats will work with the vehicle off. Children could operate the power seats and be injured. Never leave children alone in the vehicle.

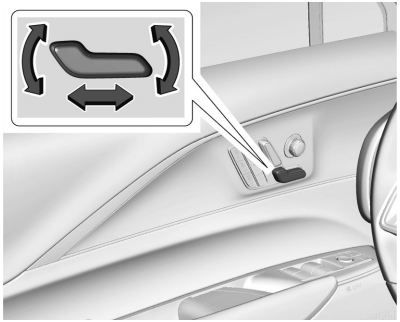

To adjust the seat:

- Move the seat forward or rearward by sliding the control forward or rearward.
- Raise or lower the entire seat by moving the rear of the control up or down.
- If equipped, raise or lower the front part of the seat cushion by moving the front of the control up or down.

To adjust the seatback, see *Reclining Seatbacks* ⇨ *36*.

To adjust the lumbar support, see *Lumbar Adjustment* ⇨ *37*.

Reclining Seatbacks

⚠ Warning

Sitting in a reclined position when the vehicle is in motion can be dangerous. Even when buckled up, the seat belts cannot do their job.

The shoulder belt will not be against your body. Instead, it will be in front of you. In a crash, you could go into it, receiving neck or other injuries.

The lap belt could go up over your abdomen. The belt forces would be there, not at your pelvic bones. This could cause serious internal injuries.

For proper protection when the vehicle is in motion, have the seatback upright. Then sit well back in the seat and wear the seat belt properly.



Do not have a seatback reclined if the vehicle is moving.

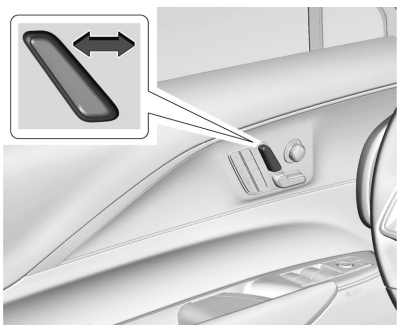

- Move the control back to recline.
- Move the control forward to raise.

Lumbar Adjustment

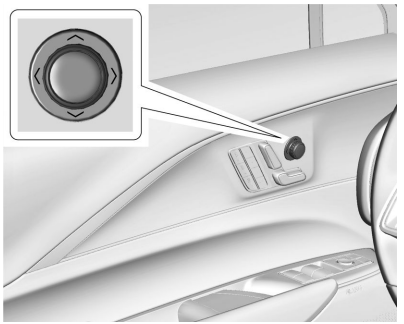

Driver Seat Shown, Passenger Seat Similar

- Press and hold the front or rear of the control to increase or decrease lumbar support.
- If equipped, press and hold the top or bottom of the control to raise or lower lumbar support.

Uplevel Seat Adjustment

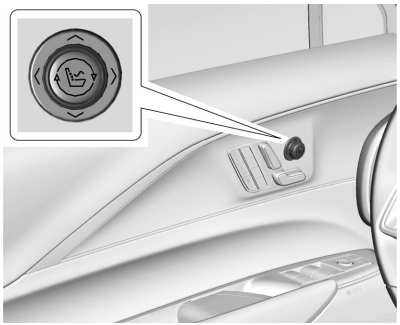

To adjust lumbar support, if equipped:

- Turn the center of the control to scroll to lumbar support on the infotainment display.
- Press > or < to adjust lumbar forward or rearward.
- Press ∧ or ∨ to adjust lumbar up or down.

Bolster Support

To adjust bolster support, if equipped:

- Turn the center of the control to scroll to bolster support on the infotainment display.

- Press > or < to adjust the back bolster outward or inward.
- Press ∧ or ∨ to adjust the cushion bolster up or down.

Massage

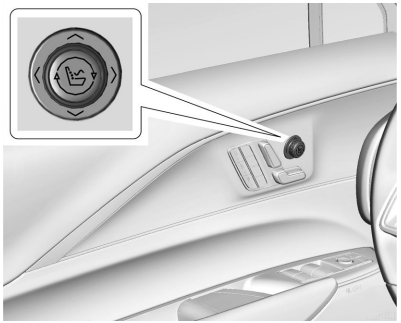

Driver Seat Shown, Passenger Seat Similar

If equipped, the vehicle must be on to use the massage feature.

To activate and adjust massage:

- Rotate the center of the control to scroll to massage on the infotainment display.
- Press ∧ or ∨ to adjust massage type.
- > or < to adjust the intensity.
- To turn massage off or to activate massage at last massage type and intensity settings, press the center of the control.

The massage feature will turn off after approximately 20 minutes. Press the center of the control to restart the massage feature.

Memory Seats

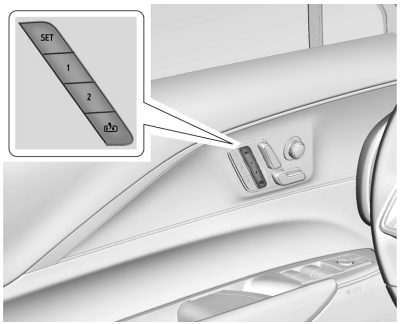

Driver Side Shown, Passenger Side Similar

If equipped, front seat occupants can save their unique driving positions and a shared exit position using the memory seat feature.

If equipped, drivers can also save other feature position settings, such as the power mirrors, the power steering wheel, and Head-Up Display.

Identifying Driver Number

The vehicle uses the remote key number 1 and 2 to identify the current driver. The Driver Information Center welcome message, "You are driver x for memory recalls," identifies the current remote key number. This message appears the first few times the vehicle is turned on with a different remote key. To ensure Seat Entry Memory works properly, save positions to the 1 or 2 memory button that match the driver number in the welcome message. To help identify remote key IDs, carry only one remote key when entering the vehicle. If the welcome message does not display, perform the following steps:

1. Move all remote keys away from the vehicle.
2. Turn the vehicle on with another remote key. A Driver Information Center welcome message should display indicating the driver number of the other remote key. Turn the vehicle off and remove the other remote key from the vehicle.

3. Turn the vehicle on with the initial remote key. The Driver Information Center welcome message should display the driver number of the initial remote key.

Saving Seating Positions

Read these instructions completely before saving memory positions.

To save preferred driving positions to 1 and 2:

1. Turn the vehicle on. A Driver Information Center welcome message may indicate the driver number of the current remote key. See "Identifying Driver Number" previously in this section.
2. Adjust all available memory features to the desired driving position.
3. Press and release SET; an audible alert will sound.
4. Immediately upon releasing SET, press and hold memory button 1 or 2 matching the current driver's remote key number until two audible alerts sound. If too much time passes between releasing SET and pressing 1 or 2, the two audible alerts will not sound, indicating memory positions were not saved. Repeat Steps 3 and 4 to try again.
5. Repeat Steps 1-4 for the other remote key 1 or 2 using the other 1 or 2 memory button.

If you are the only driver, you can save the preferred driving positions to both 1 and 2.

To save the common exit seating position to that is used by all drivers for Manually Recalling Seating Positions and Auto Seat Exit Memory Recall features, repeat Steps 1–4 using , the exit button.

Manually Recalling Seating Positions

To recall the positions previously saved, press and hold 1, 2, or button until the recall is complete.

Manual Memory recall movement for 1, 2 or buttons may be initiated and will complete to the saved memory position if the vehicle is in or out of P (Park).

Enabling Automatic Recalls (Driver Seat)

- Seat Entry Memory moves the driver seat to the selected 1 or 2 position when the vehicle is started. Select Settings > Vehicle > Seating Position > Driver Seat Entry Memory > ON or OFF. See "Auto Seat Entry Memory Recall" later in this section.
- Seat Exit Memory moves the driver seat to the preferred exit position of the button when the vehicle is turned off and the door is opened. Select Settings > Vehicle > Seating Position > Driver Seat Exit Memory > ON or OFF. See "Auto Seat Exit Memory Recall" later in this section.
- The other feature position settings will be stored and recalled with memory seats.

Auto Seat Entry Memory Recall

Seat Entry Memory will automatically begin movement to the seating positions of the 1 or 2 button corresponding to the driver's remote key number 1 or 2 detected by the vehicle when:

- The vehicle is turned on.
- Seating positions have previously been saved to the same 1 or 2 button. See "Saving Seating Positions" previously in this section.
- Seat Entry Memory is enabled. See "Enabling Automatic Recalls" previously in this section.
- The vehicle is in P (Park).
- The other feature position settings will be stored and recalled with memory seats.

If the saved memory seat position does not automatically recall, verify the recall is enabled. See "Enabling Automatic Recalls" previously in this section.

If the memory seat recalls to the wrong position, the driver's remote key number 1 or 2 might not match the saved memory button positions. Try using the other remote key or save the positions to the other 1 or 2 memory button. See "Saving Seating Positions" earlier in this section.

Automatic Seat Entry Memory recalls are only available for driver's remote key numbers 1 and 2. Remote keys 3–8 will not provide Seat Entry Memory recalls.

If equipped with Automatic Parking Assist, the seat will automatically move to the seating position saved to the 1 or 2 button corresponding to the driver's remote key number 1 or 2 after leaving a parking space when you have entered the vehicle, closed the driver door, and applied the brake pedal. See *Automatic Parking Assist (APA)* ⇨ *239*.

Auto Seat Exit Memory Recall

Seat Exit Memory will begin movement to the seating position of the button when:

- The driver turns off the vehicle and opens the door within a short time.
- A seating position has previously been saved to the memory button. See "Saving Seating Positions" previously in this section.
- Seat Exit Memory is enabled. See "Enabling Automatic Recalls" previously in this section.
- The vehicle is in P (Park).

Seat Exit Memory is not linked to the driver's remote key. The seating position saved to is used for all drivers.

If equipped with Automatic Parking Assist, the seat will automatically move to the seating position saved to the button after entering a parking space when Automatic Parking Assist is activated, the vehicle is in P (Park), and the driver door is opened. See *Automatic Parking Assist (APA)* ⇨ *239*.

Cancel Memory Seating Recalls

- During any memory recall:
  Press a power seat control
  Press SET memory button
  Press the power mirror control pad
- During Manual memory recall:
  Release 1, 2, or memory button
- During Auto Seat Entry Memory Recall:
  Shift out of P (Park)
  Turn the vehicle off
  Press SET, 1, 2, or memory buttons
- During Auto Seat Exit Memory Recall:
  Press SET, 1, 2, or memory buttons

Obstructions

If something has blocked the seat while recalling a memory position, the recall may stop. Remove the obstruction and try the recall again. If the memory position still does not recall, see your dealer.

Heated and Ventilated Front Seats

Warning

If temperature change or pain to the skin cannot be felt, the seat heater may cause burns. To reduce the risk of burns, use care when using the seat heater, especially for long periods of time. Do not place anything on the seat that insulates against heat, such as a blanket, cushion, cover, or similar item. This may cause the seat heater to overheat. An overheated seat heater may cause a burn or may damage the seat.

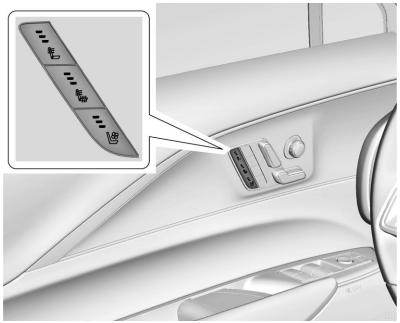

Heated and Ventilated Seat Buttons Shown, Heated Seat Buttons Similar

If equipped, the heated and ventilated seat buttons are located on the door panel. To operate, the vehicle must be on.

: Press to heat the driver or passenger seatback and cushion. The indicator light is red when heating.

: Press to heat the driver or passenger seatback. The indicator light is red when heating.

: Press, if equipped, to ventilate the driver or passenger seat. A ventilated seat has a fan that circulates air through the seat. The air is not cooled. The indicator light is blue when ventilating.

Press the button once for the highest setting. Each consecutive press lowers the setting until it turns off. If the heated seats are on high, the level may automatically be lowered after approximately 30 minutes.

The passenger seat may take longer to heat up.

Auto Heated and Ventilated Seats

When the vehicle is on, this feature will automatically activate the heated or ventilated seats at the level required by the interior temperature.

The active high, medium, low, or off heated or ventilated seat level will be indicated by the heated or ventilated seat buttons on the door panel. Use the heated or ventilated seat buttons on the door panel to turn auto heated or ventilated seats off. If the passenger seat is unoccupied, the auto heated or ventilated seats feature will not activate that seat. To enable or disable auto heated or ventilated seats, from the app screen on the infotainment display,

select Settings > Vehicle > Climate and Air Quality > Cooled/Ventilated or Heated Seats on Startup > ON or OFF.

Remote Start Heated and Ventilated Seats

During a remote start, the heated or ventilated seats, if equipped, can be turned on automatically. When it is cold outside, the heated seats turn on, and when it is hot outside the ventilated seats turn on. If the auto heated or ventilated seats feature, if equipped, is not turned on, the heated or ventilated seats may be canceled when the vehicle is turned on. If necessary, press the heated or ventilated seat button to use the heated or ventilated seats after the vehicle is started.

The heated or ventilated seat indicator lights may turn on during a remote start.

The temperature performance of an unoccupied seat may be reduced. This is normal.

To enable or disable remote start heated or ventilated seats, from the app screen on the infotainment display, select Settings > Vehicle > Remote Lock, Unlock, and Start > Remote Start Auto Heated Seats or Remote Start Auto Cooled/Ventilated Seats > ON or OFF. See *Remote Start* ⇨ *13*.

Rear Seats

Rear Seat Reminder

If equipped and enabled, the Driver Information Center displays a REAR SEAT REMINDER LOOK IN REAR SEAT message under certain circumstances. This message indicates there may be an item or passenger in the rear seat. Check the rear seat before exiting the vehicle.

Opening a second row door while the vehicle is on or up to 10 minutes before the vehicle is on, activates the feature. When the vehicle is turned off, the Driver Information Center message and an audible alert activate. The alert does not directly detect objects in the rear seat; instead, it detects when a rear door is opened and closed under certain conditions, indicating that there may be something in the rear seat.

The feature activates only once each time the vehicle is turned on and off. Reactivate it by opening and closing the second row doors. An alert may occur even when there is nothing in the rear seat; for example, if a child enters the vehicle through the rear door and leaves without the vehicle being shut off.

From the infotainment app screen, select Settings > Vehicle > Rear Seat Reminder to turn the feature on or off.

Rear Seats

Reclining the Seatback

To recline the seatback:

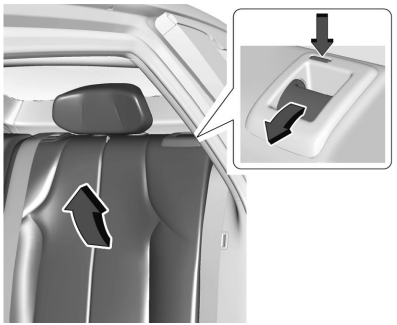

1. Pull the reclining seatback handle.

   A tab near the seatback handle raises when the seatback is unlocked.
2. Move the seatback to the desired position, and then release the handle to lock the seatback in place.

3. Push and pull on the seatback to make sure it is locked.

Folding the Seatback

Either side of the seatback can be folded for more cargo space. Fold a seatback only when the vehicle is not moving.

⚠ Warning

Folding a rear seat with the seat belts still fastened may cause damage to the seat or the seat belts. Always unbuckle the seat belts and return them to their normal stowed position before folding a rear seat.

To fold the seatback:

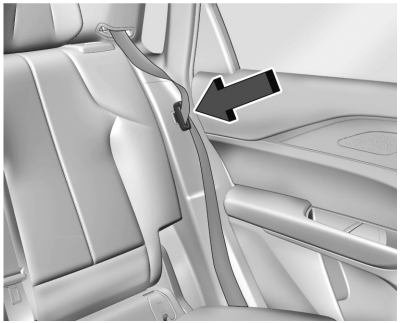

1. Stow the seat belt latch plate in the stowage slot.

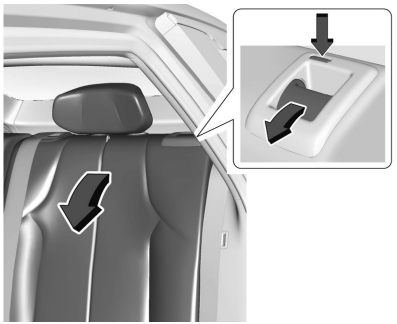

2. Pull the handle on top of the seatback to unlock it.
3. Fold the seatback forward.

   Repeat the steps to fold the other seatback, if desired.

⚠ Warning

If equipped, rear seats have electronic switches for seat functionality that operate when the vehicle is off or in park and running. Children could operate the seat switches and be injured. Never leave children alone in the vehicle.

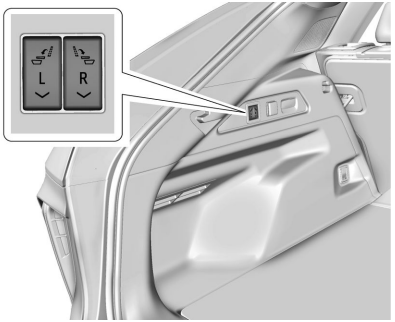

Power Rear Seats

If equipped, the rear seatbacks can also be folded forward by pressing and holding the switches located in the rear cargo area.

The left switch folds the left seatback, and the right switch folds the right seatback.

Raising the Seatback

⚠ Warning

If either seatback is not locked, it could move forward in a sudden stop or crash. That could cause injury to the person sitting there. Always push and pull on the seatbacks to be sure they are locked.

⚠ Warning

A seat belt that is improperly routed, not properly attached, or twisted will not provide the protection needed in a crash. The person wearing the belt could be seriously injured. After raising the rear seatback, always check to be sure that the seat belts are properly routed and attached, and are not twisted.

To raise a seatback:

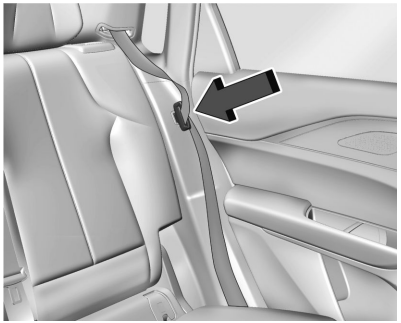

1. Ensure the seat belt latch plate is in the stowage slot.
2. Lift the seatback up and push it rearward to lock it in place.

   A tab near the seatback handle retracts when the seatback is locked in place.
3. Push and pull the top of the seatback to be sure it is locked into position.
4. Repeat the steps to raise the other seatback, if necessary.

When the seat is not in use, it should be kept in the upright, locked position.

Heated Rear Seats

Warning

If temperature change or pain to the skin cannot be felt, the seat heater may cause burns. See the Warning under *Heated and Ventilated Front Seats* ⇨ *41*.



If equipped, the buttons are on the rear of the center console.

With the vehicle on, press or to heat the left or right outboard seat cushion and seatback. An indicator on the rear climate control display appears when this feature is on.

Press the button once for the highest setting. With each press of the button, the seat will change to the next lower setting, and then off. The indicator lights next to the buttons indicate three for the highest setting and one for the lowest.

If the heated seats are on high for approximately 30 minutes, their level may automatically be lowered.

Remote Start Heated Seats

If equipped, the heated seats will turn on automatically during a remote start if it is cold outside. The heated seat indicators may come on during this operation. The heated seats may cancel when the vehicle is turned on. These features can be manually selected with the heated seat buttons after the vehicle is turned on.

The temperature performance of an unoccupied seat may be reduced. This is normal.

To enable or disable remote start heated seats, select Settings > Vehicle > Remote Lock, Unlock, and Start > Remote Start Auto Heated Seats > ON or OFF. See *Remote Start* ⇨ *13*.

Seat Belts

This section describes how to use seat belts properly, and some things not to do.

Warning

Do not let anyone ride where a seat belt cannot be worn properly. In a crash, if you or your passenger(s) are not wearing seat belts, injuries can be much worse than if you are wearing seat belts. You can be seriously injured or killed by hitting things inside the vehicle harder or by being ejected from the vehicle. In addition, anyone who is not buckled up can strike other passengers in the vehicle.

It is extremely dangerous to ride in a cargo area, inside or outside of a vehicle. In a collision, passengers riding in these areas are more likely to be seriously injured or killed. Do not allow passengers to ride in any area of the vehicle that is not equipped with seats and seat belts.

Always wear a seat belt, and check that all passenger(s) are restrained properly too.

This vehicle has indicators as a reminder to buckle the seat belts. See *Seat Belt Reminders* ⇨ *96*.

Why Seat Belts Work

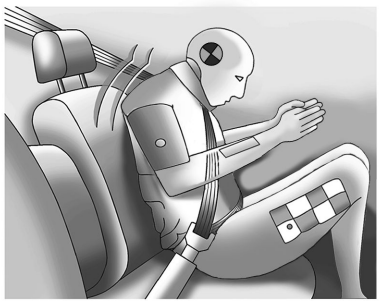

When riding in a vehicle, you travel as fast as the vehicle does. If the vehicle stops suddenly, you keep going until something stops you. It could be the windshield, the instrument panel, or the seat belts!

When you wear a seat belt, you and the vehicle slow down together. There is more time to stop because you stop over a longer distance, and when worn properly, your strongest bones take the forces from the seat belts. That is why wearing seat belts makes such good sense.

Questions and Answers About Seat Belts

Q: Will I be trapped in the vehicle after a crash if I am wearing a seat belt?

A: You *could* be — whether you are wearing a seat belt or not. Your chance of being conscious during and after a crash, so you *can* unbuckle and get out, is *much* greater if you are belted.

Q: If my vehicle has airbags, why should I have to wear seat belts?

A: Airbags are supplemental systems only. They work *with* seat belts — not instead of them. Whether or not an airbag is provided, all occupants still have to buckle up to get the most protection.

Also, in nearly all states and in all Canadian provinces, the law requires wearing seat belts.

Buckle To Drive

If equipped, this feature delays the vehicle from shifting out of P (Park) when the driver seat belt is not buckled. The Buckle to Drive feature must be turned ON in the infotainment system to work. To turn the Buckle to Drive feature on or off, select Settings > Vehicle > Buckle to Drive. See *Teen Driver* ⇨ *156*, if equipped.

If the vehicle is on and the brake pedal is pressed with the vehicle in P (Park) but the driver seat belt is not buckled, a message displays in the Driver Information Center and the vehicle will be delayed from shifting out of P (Park). Buckle the driver seat belt to clear the message and shift out of P (Park). Shifting from P (Park) will be delayed once for each time the vehicle is started.

On some models, Buckle to Drive may also delay shifting out of P (Park) if a front passenger seat belt is unbuckled. A message displays in the Driver Information Center. Buckle the front passenger seat belt to clear the message and shift out of P (Park). This feature may delay the vehicle from shifting out of P (Park) if an object, such as a briefcase, handbag, grocery bag, laptop, or other electronic device, is on the front passenger seat. If this happens, remove the object from the seat or buckle the seat belt to shift out of P (Park).

If the driver, or on some vehicles, the present front passenger remains unbuckled, the Driver Information Center message will turn off after several seconds and the vehicle can be shifted

out of P (Park). See “Seat Belts” and “Child Restraints” in the Index for information about the importance of proper restraint use.

If the driver seat belt or the front passenger seat belt is unbuckled when driving, the seat belt reminder audible alert and light(s) will come on. See *Seat Belt Reminders* ⇨ *96*. This feature may not function properly if the airbag readiness light is on. See *Airbag Readiness Light* ⇨ *98*.

How to Wear Seat Belts Properly

Follow these rules for everyone's protection.

There are additional things to know about seat belts and children, including smaller children and infants. If a child will be riding in the vehicle, see *Older Children* ⇨ *63* or *Infants and Young Children* ⇨ *65*. Review and follow the rules for children in addition to the following rules.

It is very important for all occupants to buckle up. Statistics show that unbelted people are hurt more often in crashes than those who are wearing seat belts.

There are important things to know about wearing a seat belt properly.

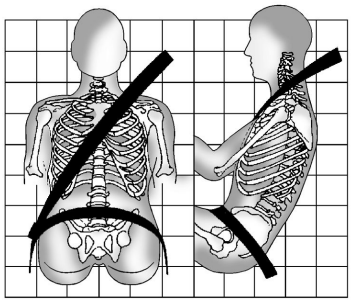

- Sit up straight and always keep your feet on the floor in front of you (if possible).
- Wear the lap part of the belt low and snug on the hips, just touching the thighs. In a crash, this applies force to the strong pelvic bones and you would be less likely to slide under the lap belt. If you slid under it, the belt would apply force on your abdomen. This could cause serious or even fatal injuries.
- Wear the shoulder belt over the shoulder and across the chest. These parts of the body are best able to take belt restraining forces. The shoulder belt locks if there is a sudden stop or crash.

⚠ Warning

You can be seriously injured, or even killed, by not wearing your seat belt properly.

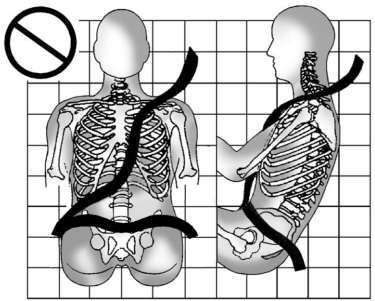

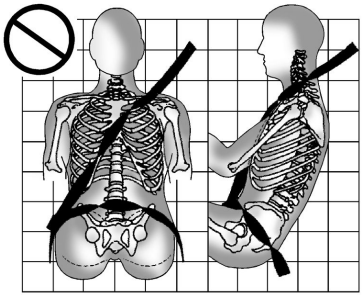

Never allow the lap or shoulder belt to become loose or twisted.

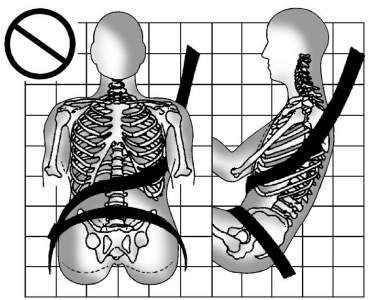

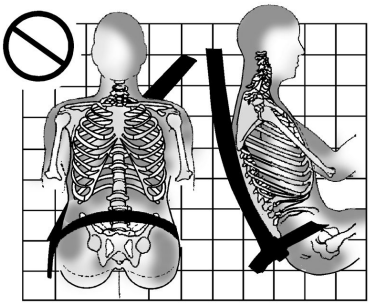

Never wear the shoulder belt under both arms or behind your back.

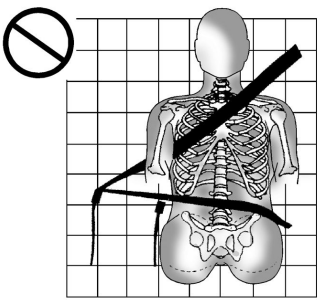

Always use the correct buckle for your seating position.

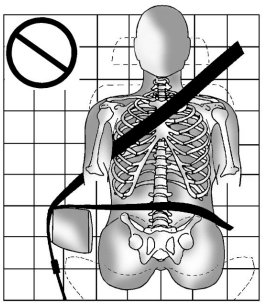

Never route the lap or shoulder belt over an armrest.

⚠ Warning

The seat belt can be pinched if it is routed under plastic trim on the seat, such as trim around the rear seatback folding handle or side airbag. In a crash, pinched seat belts might not provide adequate protection. Never allow seat belts to be routed under plastic trim pieces.

⚠ Warning

You can be seriously injured or killed if the shoulder belt is worn behind your back, under your legs, or wrapped around your neck. The shoulder belt can tighten but cannot be loosened if it is locked. The shoulder belt locks when it is pulled all the way out of the retractor. It unlocks when the shoulder belt is allowed to go all the way back into the retractor, but it cannot do this if it is wrapped around you. You may have to cut the seat belt if it is locked and tightened around you.

Lap-Shoulder Belt

All seating positions in the vehicle have a lap-shoulder belt.

The following instructions explain how to wear a lap-shoulder belt properly.

1. Adjust the seat, if the seat is adjustable, so you can sit up straight. To see how, see "Seats" in the Index.

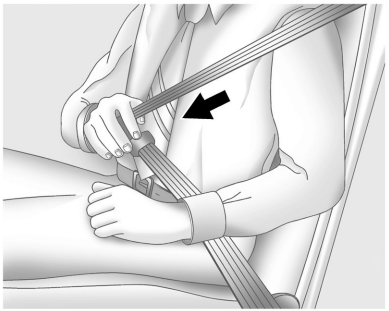

2. Pick up the latch plate and pull the belt across you. Do not let it get twisted.

   The lap-shoulder belt may lock if you pull the belt across you very quickly. If this happens, let the belt go back slightly to unlock it. Then pull the belt across you more slowly.

   If the shoulder portion of a passenger belt is pulled out all the way, the child restraint locking feature may be engaged. See *Child Restraint Systems* ⇨ *67*. If this occurs, let the belt go back all the way and start again. If the locking feature stays engaged after letting the belt go back to stowed position on the seat, move the seat rearward or recline the seat until the shoulder belt retractor lock releases.

   If the shoulder portion of the driver belt is pulled out all the way, the shoulder belt retractor lock feature may be engaged. If this happens, let the belt go back all the way and start again. If the locking feature stays engaged after letting the belt go back to stowed position on the seat, move the seat rearward or recline the seat until the shoulder belt retractor lock releases.

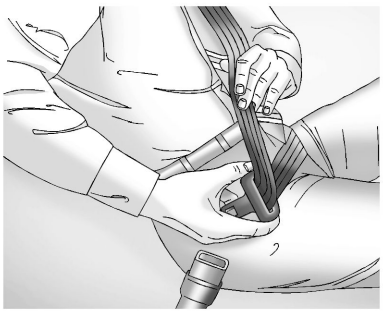

   If the webbing locks in the latch plate before it reaches the buckle, tilt the latch plate flat to unlock.

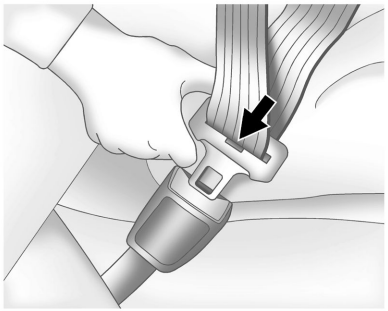

3. Push the latch plate into the buckle until it clicks.

   Pull up on the latch plate to make sure it is secure. If the belt is not long enough, see *Seat Belt Extender* ⇨ *52*.

   Position the release pushbutton on the buckle so that the seat belt could be quickly unbuckled if necessary.

4. If equipped with a shoulder belt height adjuster, move it to the height that is right for you. See "Shoulder Belt Height Adjuster" later in this section for instructions on use and important safety information.

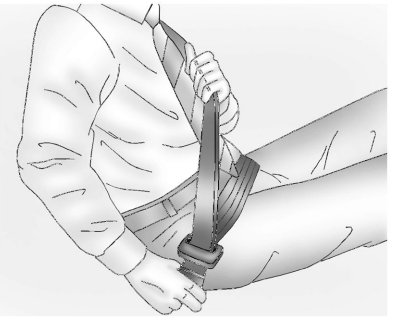

5. To make the lap part tight, pull up on the shoulder belt.

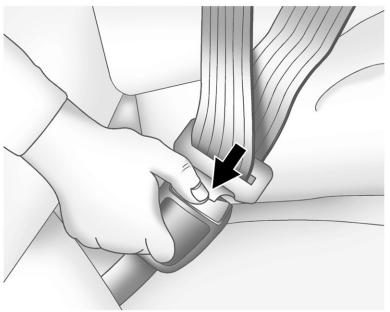

To unlatch the belt, push the release pushbutton on the buckle. The belt should return to its stowed position.

Always stow the seat belt slowly. If the seat belt webbing returns quickly to the stowed position, the retractor may lock and cannot be pulled out. If this happens, pull the seat belt straight out firmly to unlock the webbing, and then release it. If the webbing is still locked in the retractor, see your dealer.

Before a door is closed, be sure the seat belt is out of the way. If a door is slammed against a seat belt, damage can occur to both the seat belt and the vehicle.

Shoulder Belt Height Adjuster

The vehicle has a shoulder belt height adjuster for the driver and front outboard passenger seating positions.

Adjust the height so the shoulder portion of the belt is on the shoulder and not falling off of it. The belt should be close to, but not contacting, the neck. Improper shoulder belt height adjustment could reduce the effectiveness of the seat belt in a crash. See *How to Wear Seat Belts Properly* ⇨ *47*.

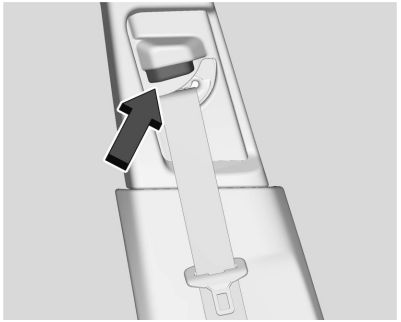

Press the release button and move the height adjuster to the desired position. The adjuster can be moved up by pushing the slide/trim up. After the adjuster is set to the desired position, try to move it down without pressing the release button to make sure it has locked into position.

Seat Belt Pretensioners

This vehicle has seat belt pretensioners for front row and second row outboard occupants. Although the seat belt pretensioners cannot be seen, they are part of the seat belt assembly. They can help tighten the seat belts during the early stages of a moderate to severe frontal, near frontal, or rear crash if the threshold conditions for pretensioner activation are met. Seat belt pretensioners can also help tighten the seat belts in a side crash or a rollover event.

Pretensioners work only once. If the pretensioners activate in a crash, the pretensioners and probably other parts of the vehicle seat belt system will need to be replaced. See *Replacing Seat Belt System Parts After a Crash* ⇨ *53*.

Do not sit on the outboard seat belt while entering or exiting the vehicle or at any time while sitting in the seat. Sitting on the seat belt can damage the webbing and hardware.

Seat Belt Use During Pregnancy

Seat belts work for everyone, including pregnant women. Like all occupants, they are more likely to be seriously injured if they do not wear seat belts.

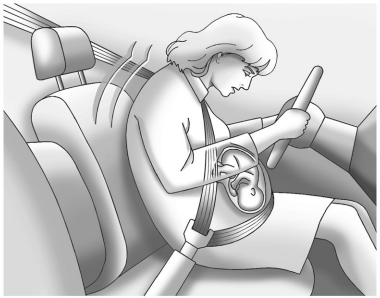

A pregnant woman should wear a lap-shoulder belt, and the lap portion should be worn as low as possible, below the rounding, throughout the pregnancy.

The best way to protect the fetus is to protect the mother. When a seat belt is worn properly, it is more likely that the fetus will not be hurt in a crash. For pregnant women, as for anyone, the key to making seat belts effective is wearing them properly.

Seat Belt Extender

Warning

Using a seat belt extender incorrectly can affect certain vehicle safety alerts and systems, potentially leading to unexpected vehicle movement. Always unfasten the seat belt by pushing on the vehicle-mounted buckle release button. Only use the extender-mounted release button to remove the extender after you are done using it. Follow all instructions that come with the seat belt extender.

If the vehicle seat belt will fasten around you, you should use it.

But if a seat belt is not long enough, your dealer will order you an extender. Only a genuine GM issued extender should be used. When you go in to order it, take the heaviest coat you will wear, so the extender will be long enough for you. To help avoid personal injury, do not let someone else use it, and use it only for the seat it is made to fit. The extender has been designed for adults. Never use it for securing child restraints. For more information on the proper use and fit of seat belt extenders, see the instruction sheet that comes with the extender.

Safety System Check

Periodically check the seat belt reminder, seat belts, buckles, latch plates, retractors, shoulder belt height adjusters (if equipped), and seat belt anchorages to make sure they are all in working order. Look for any other loose or damaged seat belt system parts that might keep a seat belt system from performing properly. See your dealer to have it repaired. Torn, frayed, or twisted seat belts may not protect you in a crash. Torn or frayed seat belts can rip apart under impact forces. If a belt is torn or frayed, have it replaced immediately. If a belt is twisted, it may be possible to untwist by reversing the latch plate on the webbing. If the twist cannot be corrected, ask your dealer to fix it.

Make sure the seat belt reminder light is working. See *Seat Belt Reminders* ⇨ *96*.

Keep seat belts clean and dry. See *Seat Belt Care* ⇨ *52*.

Seat Belt Care

Keep belts clean and dry.

Warning

Do not bleach or dye seat belt webbing. It may severely weaken the webbing. In a crash, they might not be able to provide adequate protection. Clean and rinse seat belt webbing only with mild soap and lukewarm water. Allow the webbing to dry.

Seat belts should be properly cared for and maintained.

Seat belt hardware should be kept dry and free of dust or debris. As necessary exterior hard surfaces and seat belt webbing may be lightly cleaned with mild soap and water. Ensure there is not excessive dust or debris in the mechanism. If dust or debris exists in the system after proper cleaning please see the dealer. Parts may need to be replaced to ensure proper functionality of the system.

Replacing Seat Belt System Parts After a Crash

⚠ Warning

A crash can damage the seat belt system in the vehicle. A damaged seat belt system may not properly protect the person using it, resulting in serious injury or even death in a crash. To help make sure the seat belt systems are working properly after a crash, have them inspected and any necessary replacements made as soon as possible.

After a minor crash, replacement of seat belts may not be necessary. But the seat belt assemblies that were used during any crash may have been stressed or damaged. See your dealer to have the seat belt assemblies inspected or replaced.

New parts and repairs may be necessary even if the seat belt system was not being used at the time of the crash.

Have the seat belt pretensioners checked if the vehicle has been in a crash, or if the airbag readiness light stays on after you start the vehicle or while you are driving. See *Airbag Readiness Light* ⇨ *98*.

Airbag System

Here are the most important things to know about the airbag system:

⚠ Warning

You can be severely injured or killed in a crash if you are not wearing your seat belt, even with airbags. Airbags are designed to work with seat belts, not replace them. Also, airbags are not designed to inflate in every crash. In some crashes seat belts are the only restraint. See *When Should an Airbag Inflate?* ⇨ *56*.

Wearing your seat belt during a crash helps reduce your chance of hitting things inside the vehicle or being ejected from it. Airbags are "supplemental restraints" to the seat belts. Everyone in the vehicle should wear a seat belt properly, whether or not there is an airbag for that person.

⚠ Warning

Because airbags inflate with great force and faster than the blink of an eye, anyone who is up against, or very close to, any airbag when it inflates can be seriously injured or killed. Do not sit unnecessarily close to any airbag, as you would be if sitting on the edge of the seat or leaning forward. Seat belts help keep you in position before and during a crash. Always wear a seat belt, even with airbags. The driver should sit as far back as possible while still maintaining control of the vehicle. The seat belts and the front outboard passenger airbags are most effective when you are sitting well back and upright in the seat with both feet on the floor.

Occupants should not lean on or sleep against the door or side windows in seating positions with seat-mounted side impact airbags and/or roof-rail airbags.

⚠ Warning

Children who are up against, or very close to, any airbag when it inflates can be seriously injured or killed. Always secure children properly in the vehicle. To read how, see *Older Children* ⇨ *63* or *Infants and Young Children* ⇨ *65*.

The vehicle has the following airbags:

- A frontal airbag for the driver
- A frontal airbag for the front outboard passenger
- A knee airbag for the driver
- A knee airbag for the front outboard passenger
- A seat-mounted side impact airbag for the driver
- A seat-mounted side impact airbag for the front outboard passenger
- A roof-rail airbag for the driver and the passenger seated directly behind the driver
- A roof-rail airbag for the front outboard passenger and the passenger seated directly behind the front outboard passenger

All vehicle airbags have the word AIRBAG on the trim or on a label near the deployment opening.

For frontal airbags, the word AIRBAG is on the center of the steering wheel for the driver and on the instrument panel for the front outboard passenger.

For knee airbags, the word AIRBAG is on the lower part of the instrument panel.

For seat-mounted side impact airbags, the word AIRBAG is on the side of the seatback or side of the seat closest to the door.

For roof-rail airbags, the word AIRBAG is on the ceiling or trim.

Airbags are designed to supplement the protection provided by seat belts. Even though today's airbags are also designed to help reduce the risk of injury from the force of an inflating bag, all airbags must inflate very quickly to do their job.



There is an airbag readiness light on the instrument cluster, which shows the airbag symbol.

The system checks the airbag electrical system for malfunctions. The light tells you if there is an electrical problem. See *Airbag Readiness Light* ⇨ *98*.

Where Are the Airbags?

⚠ Warning

If something is between an occupant and an airbag, the airbag might not inflate properly or it might force the object into that person causing severe injury or even death. The path of an inflating airbag must be kept clear. Do not put anything between an occupant and an airbag, and

(Continued)

Warning (Continued)

do not attach or put anything on the steering wheel hub or on or near any other airbag covering.

Do not use seat accessories that block the inflation path of a seat-mounted side impact airbag.

Never secure anything to the roof of a vehicle with roof-rail airbags by routing a rope or tie-down through any door or window opening. If you do, the path of an inflating roof-rail airbag will be blocked.

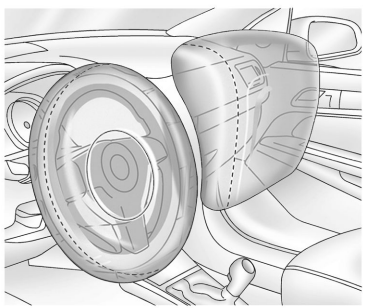

The driver frontal airbag is in the center of the steering wheel.

The front outboard passenger frontal airbag is in the passenger side instrument panel.

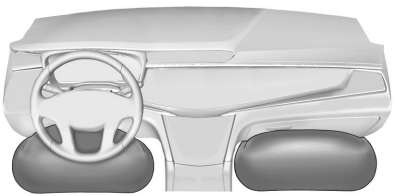

The driver knee airbag is below the steering column. The front outboard passenger knee airbag is below the glove box.



Driver Side Shown, Passenger Side Similar

The driver and front outboard passenger seat-mounted side impact airbags are in the side of the seatbacks closest to the door.



Driver Side Shown, Passenger Side Similar

The roof-rail airbags for the driver, front outboard passenger, and second row outboard passengers are in the ceiling above the side windows.

When Should an Airbag Inflate?

This vehicle is equipped with airbags. See *Airbag System* ⇨ *53*. Airbags are designed to inflate if the impact exceeds the specific airbag system's deployment threshold. Deployment thresholds are used to predict how severe a crash is likely to be in time for the airbags to inflate and help restrain the occupants. The vehicle has electronic sensors that help the airbag system determine the severity of the impact. Deployment thresholds can vary with specific vehicle design.

Frontal airbags are designed to inflate in moderate to severe frontal crashes to help reduce the potential for severe injuries, mainly to the driver's or front outboard passenger's head and chest.

Whether the frontal airbags will or should inflate is not based primarily on how fast the vehicle is traveling. It depends on what is hit, the direction of the impact, and how quickly the vehicle slows down.

Frontal airbags may inflate at different crash speeds depending on whether the vehicle hits an object straight on or at an angle, and whether the object is fixed or moving, rigid or deformable, narrow or wide.

Frontal airbags are not intended to inflate during vehicle rollovers, in rear impacts, or in many side impacts.

In addition, the vehicle has advanced technology frontal airbags. Advanced technology frontal airbags adjust the restraint according to either crash severity or occupant interaction.

Knee airbags are designed to inflate in moderate to severe frontal impacts. Knee airbags are not designed to inflate during vehicle rollovers, in rear impacts, or in many side impacts.

Seat-mounted side impact airbags are designed to inflate in moderate to severe side crashes depending on the location of the impact. These airbags may also inflate in some moderate to severe frontal impacts. Seat-mounted side impact airbags are not designed to inflate in rollovers or rear impacts. A seat-mounted side impact airbag is designed to inflate on the side of the vehicle that is struck.

Roof-rail airbags are designed to inflate in moderate to severe side crashes depending on the location of the impact. In addition, these roof-rail airbags may inflate during a rollover or in a severe frontal impact. Roof-rail airbags are not designed to inflate in rear impacts. Both roof-rail airbags may inflate when either side of the vehicle is struck or if the sensing system predicts that the vehicle is about to roll over on its side, or in a severe frontal impact.

In any particular crash, no one can say whether an airbag should have inflated simply because of the vehicle damage or repair costs.

What Makes an Airbag Inflate?

In a deployment event, the sensing system sends an electrical signal triggering a release of gas from the inflator. Gas from the inflator fills the airbag causing the bag to break out of the cover. The inflator, the airbag, and related hardware are all part of the airbag module.

For airbag locations, see *Where Are the Airbags?* ⇨ *54*.

How Does an Airbag Restrain?

In moderate to severe frontal collisions, even belted occupants can contact the steering wheel or the instrument panel. In moderate to severe side collisions, even belted occupants can contact the inside of the vehicle.

Airbags supplement the protection provided by seat belts by distributing the force of the impact more evenly over the occupant's body.

Rollover capable roof-rail airbags are designed to help contain the head and chest of occupants in the outboard seating positions in the first and second rows. The rollover capable roof-rail airbags are designed to help reduce the risk of full or partial ejection in rollover events, although no system can prevent all such ejections.

But airbags would not help in many types of collisions, primarily because the occupant's motion is not toward those airbags. See *When Should an Airbag Inflate?* ⇨ *56*.

Airbags should never be regarded as anything more than a supplement to seat belts.

What Will You See After an Airbag Inflates?

⚠ Warning

When an airbag inflates, there may be dust in the air. This dust could cause breathing problems for people with a history of asthma or other breathing trouble. To avoid this, everyone in the vehicle should get out as soon as it is safe to do so. If you have breathing problems but cannot get out of the vehicle after an airbag inflates, then get fresh air by opening a window or a door. If you experience breathing problems following an airbag deployment, you should seek medical attention.

After frontal, knee, and seat-mounted side impact airbags inflate, they quickly deflate, so quickly that some people may not even realize the airbags inflated. Roof-rail airbags may still be at least partially inflated for some time after they inflate. Some components of the airbag module may be hot for several minutes. For location of the airbags, see *Where Are the Airbags?* ⇨ *54*.

The parts of the airbag that come into contact with you may be warm, but not too hot to touch. There may be some smoke and dust coming from the vents in the deflated airbags. Airbag inflation does not prevent people from leaving the vehicle.

⚠ Warning

If the vehicle is in a crash, the sensing system may shut down the high voltage system. When this occurs, the high voltage battery is disconnected and the vehicle will not start. The SERVICE VEHICLE SOON message in the Driver Information Center (DIC) will display. Before the vehicle can operate again, it must be serviced at your dealer.

The vehicle has a feature that may automatically unlock the doors, turn on the interior lights and hazard warning flashers

after the airbags inflate. The feature may also activate, without airbag inflation, after an event that exceeds a predetermined threshold.

This vehicle has a post-collision braking feature that may automatically engage to help slow your vehicle down after a crash. See *Post-Collision Braking (Secondary Collision Mitigation Braking)* ⇨ *189* for more information.

Plug-in vehicles have a high voltage battery and a standard 12-volt battery.

If an airbag inflates or the vehicle has been in a crash, the sensing system may shut down the high voltage system. When this occurs, the high voltage battery is disconnected and the vehicle will not start. Before the vehicle can be operated again, it must be serviced at your dealer.

In many crashes severe enough to inflate the airbag, windshields are broken by vehicle deformation. Additional windshield breakage may also occur from the front outboard passenger airbag.

- Airbags are designed to inflate only once. After an airbag inflates, you will need some new parts for the airbag system. If you do not get them, the airbag system will not be there to help protect you in another crash. A new system will include airbag modules and possibly other parts. The service manual for the vehicle covers the need to replace other parts.
- The vehicle has a crash sensing and diagnostic module which records information after a crash. See *Vehicle Data Recording and Privacy* ⇨ *358* and *Event Data Recorders* ⇨ *359*.
- Let only qualified technicians work on the airbag system. Improper service can mean that an airbag system will not work properly. See your dealer for service.

Passenger Sensing System

⚠ Warning

A child in a rear-facing child restraint can be seriously injured or killed if the passenger frontal airbag inflates. This is because the

(Continued)

Warning (Continued)

back of the rear-facing child restraint would be very close to the inflating airbag. A child in a forward-facing child restraint can be seriously injured or killed if the passenger frontal airbag inflates and the passenger seat is in a forward position.

Even if the passenger sensing system has turned off the front outboard passenger airbag(s), no system is fail-safe. No one can guarantee that an airbag will not deploy under some unusual circumstance, even though the airbag(s) are off.

Never put a rear-facing child restraint in the front seat, even if the airbag is off. If securing a forward-facing child restraint in the front outboard passenger seat, always move the seat as far back as it will go. It is better to secure child restraints in the rear seat. Consider using another vehicle to transport the child when a rear seat is not available.

The vehicle has a passenger sensing system for the front outboard passenger position. The passenger airbag status indicator will light on the overhead console when the vehicle is started.



The passenger airbag status indicator may include text and/or symbols to indicate the passenger frontal airbag is either On or Off.

The passenger airbag status indicator indicating both On and Off will be visible during the system check. When the system check is complete, the passenger airbag status indicator for either On or Off will be visible. See *Passenger Airbag Status Indicator* ⇨ *98*.

The passenger sensing system turns off the front outboard passenger frontal airbag and knee airbag under certain conditions. No other airbag is affected by the passenger sensing system.

The passenger sensing system works with sensors that are part of the front outboard passenger seat and seat belt.

The sensors are designed to detect the presence of a properly seated occupant and determine if the front outboard passenger frontal airbag and knee airbag should be allowed to inflate or not.

According to accident statistics, children are safer when properly secured in a rear seat in the correct child restraint for their weight and size.

Whenever possible, children aged 12 and under should be secured in a rear seating position.

Never put a rear-facing child seat in the front. This is because the risk to the rear-facing child is so great, if the airbag inflates.

The passenger sensing system is designed to turn off the front outboard passenger frontal airbag and knee airbag if:

- The front outboard passenger seat is unoccupied.
- The system determines an infant is present in a child restraint.
- A front outboard passenger takes his/her weight off of the seat for a period of time.
- There is a critical problem with the airbag system or the passenger sensing system.

When the passenger sensing system has turned off the front outboard passenger frontal airbag and knee airbag, the passenger airbag status indicator for Off will light and stay lit as a reminder that the airbags are off. See *Passenger Airbag Status Indicator* ⇨ *98*.

The passenger sensing system is designed to turn on the front outboard passenger frontal airbag and knee airbag, anytime the system senses that a person of adult size is sitting properly in the front outboard passenger seat.

When the passenger sensing system has allowed the airbags to be enabled, the passenger airbag status indicator for On will light and stay lit as a reminder that the airbags are active.

For some children, including children in child restraints, and for very small adults, the passenger sensing system may or may not turn off the front outboard passenger frontal airbag and knee airbag, depending upon the person's seating posture and body build. Everyone in the vehicle who has outgrown child restraints should wear a seat belt properly — whether or not there is an airbag for that person.

⚠ Warning

If the airbag readiness light ever comes on and stays on, it means that something may be wrong with the airbag system. To help avoid injury to yourself or others, have the vehicle serviced right away. See *Airbag Readiness Light* ⇨ *98* for more information, including important safety information.

If the On Indicator Is Lit for a Child Restraint

The passenger sensing system is designed to turn off the front outboard passenger frontal airbag and knee airbag, if the system determines that an infant is present in a child restraint. If a child restraint has been installed and the passenger airbag status indicator for On is lit:

1. Turn the vehicle off.
2. Remove the child restraint from the vehicle.
3. Remove any additional items from the seat such as blankets, cushions, seat covers, seat heaters, or seat massagers.
4. Reinstall the child restraint following the directions provided by the child restraint manufacturer and refer to *Securing Child Restraints (With the Seat Belt in the Front Seat)* ⇨ *78 Securing Child Restraints (With the Seat Belt in the Rear Seat)* ⇨ *76*.

   Make sure the seat belt retractor is locked by pulling the shoulder belt all the way out of the retractor when installing the child restraint, even if the child restraint is equipped with a seat belt lock off. When the retractor lock is set, the belt can be tightened but not pulled out of the retractor.
5. If, after reinstalling the child restraint and restarting the vehicle, the passenger airbag status indicator for On is still lit, turn the vehicle off. Then slightly recline the vehicle seatback and adjust the seat cushion, if adjustable, to make sure that the vehicle seatback is not pushing the child restraint into the seat cushion.

   Also make sure the child restraint is not trapped under the vehicle head restraint. If this happens, adjust the head restraint. See *Head Restraints* ⇨ *35*.
6. Restart the vehicle.

The passenger sensing system may or may not turn off the airbags for a child in a child restraint depending upon the child's size. It is better to secure the child restraint in a rear seat. Never put a rear-facing child restraint in the front seat, even if the passenger airbag status indicator for On is not lit.

If the Off Indicator Is Lit for an Adult-Sized Occupant

⚠ Warning

If the front outboard passenger airbag is turned off for an adult-sized occupant, the airbag will not be able to inflate and help protect that person in a crash, resulting in an increased risk of serious injury or even death. An adult-sized occupant should not ride in the front outboard passenger seat, if the passenger airbag status indicator for Off is lit.



If a person of adult size is sitting in the front outboard passenger seat, but the passenger airbag status indicator for Off is lit, it could be because that person is not sitting properly in the seat or that the child restraint locking feature is engaged. Use the following steps to allow the system to detect that person and enable the front outboard passenger frontal airbag and knee airbag:

1. Turn the vehicle off.
2. Remove any additional material from the seat, such as blankets, cushions, seat covers, seat heaters, or seat massagers.
3. Place the seatback in the fully upright position.
4. Have the person sit upright in the seat, centered on the seat cushion, with legs comfortably extended.
5. If the shoulder portion of the belt is pulled out all the way, the child restraint locking feature will be engaged. This may unintentionally cause the passenger sensing system to turn the airbag off for some adult-sized occupants. If this happens, unbuckle the belt, let the belt go back all the way, and then buckle the belt again without pulling the belt out all the way.
6. Restart the vehicle and have the person remain in this position for two to three minutes after the passenger airbag status indicator for On is lit.

Additional Factors Affecting System Operation

⚠ Warning

Stowing articles under the passenger seat or between the passenger seat cushion and seatback may interfere with the proper operation of the passenger sensing system.

Seat belts help keep the passenger in position on the seat during vehicle maneuvers and braking, which helps the passenger sensing system maintain the passenger airbag status. See “Seat Belts” and “Child Restraints” in the Index for additional information about the importance of proper restraint use.

A thick layer of additional material, such as a blanket or cushion, or aftermarket equipment such as seat covers, seat heaters, and seat massagers can affect how well the passenger sensing system operates. We recommend that you not use seat covers or other aftermarket equipment except when approved by GM for your specific vehicle. See *Adding Equipment to the Airbag-Equipped Vehicle* ➪ *62* for more information about modifications that can affect how the system operates.

The passenger airbag status indicator for On may be lit if an object, such as a briefcase, handbag, grocery bag, laptop, or other electronic device, is put on an unoccupied seat. If this is not desired, remove the object from the seat.

Servicing the Airbag-Equipped Vehicle

⚠ Warning

For up to 10 seconds after the vehicle is turned off and the battery is disconnected, an airbag can still inflate during improper service. You can be injured if you are close to an airbag when it inflates. Avoid yellow connectors. They are probably part of the airbag system. Be sure to follow proper service procedures, and make sure the person performing work for you is qualified to do so.

Airbags affect how the vehicle should be serviced. There are parts of the airbag system in several places around the vehicle. Your dealer and the service manual have information about servicing the vehicle and the airbag system. To purchase a service manual, see *Publication Ordering Information* ⇨ *356*.

Adding Equipment to the Airbag-Equipped Vehicle

Adding accessories that change the vehicle's frame, bumper system, height, front end, or side sheet metal may keep the airbag system from working properly.

The operation of the airbag system can also be affected by changing, including improperly repairing or replacing, any parts of the following:

- Airbag system, including airbag modules, front or side impact sensors, sensing and diagnostic module, or airbag wiring
- Front seats, including stitching, seams or zippers
- Seat belts
- Steering wheel, instrument panel, overhead console, ceiling trim, or pillar garnish trim
- Inner door seals, including speakers

Your dealer and the service manual have information about the location of the airbag modules and sensors, sensing and diagnostic module, and airbag wiring along with the proper replacement procedures.

In addition, the vehicle has a passenger sensing system for the front outboard passenger position, which includes sensors that are part of the passenger seat. The passenger sensing system may not operate properly if the original seat trim is replaced with non-GM covers, upholstery, or trim; or with GM covers, upholstery, or trim designed for a different vehicle. Any object, such as an aftermarket seat heater or a comfort-enhancing pad or device, installed under or on top of the seat fabric, could also interfere with the operation of the passenger sensing system. This could either prevent proper deployment of the passenger airbag(s) or prevent the passenger sensing system from properly turning off the passenger airbag(s). See *Passenger Sensing System* ⇨ *58*.

If the vehicle has rollover roof-rail airbags, see *Different Size Tires and Wheels* ⇨ *321* for additional important information.

If the vehicle must be modified because you have a disability and have questions about whether the modifications will affect the vehicle's airbag system, or if you have questions about whether the airbag system

will be affected if the vehicle is modified for any other reason, call Customer Assistance. See *Customer Assistance Offices* ⇨ *351*.

Airbag System Check

Caution

If an airbag covering is damaged, opened, or broken, the airbag may not work properly. Do not open or break the airbag coverings. If there are any opened or broken airbag coverings, have the airbag covering and/or airbag module replaced. For the location of the airbags, see *Where Are the Airbags?* ⇨ *54*. See your dealer for service.

The airbag system does not need regularly scheduled maintenance or replacement. Make sure the airbag readiness light is working. See *Airbag Readiness Light* ⇨ *98*.

Replacing Airbag System Parts After a Crash

⚠ Warning

A crash can damage the airbag systems in the vehicle. A damaged airbag system may not properly protect you and your passenger(s) in a crash, resulting in serious injury or even death. To help make sure the airbag systems are working properly after a crash, have them inspected and any necessary replacements made as soon as possible.

If an airbag inflates, you will need to replace airbag system parts. See your dealer for service.

If the airbag readiness light stays on after the vehicle is started or comes on when you are driving, the airbag system may not work properly. Have the vehicle serviced right away. See *Airbag Readiness Light* ⇨ *98*.

Child Restraints

Older Children

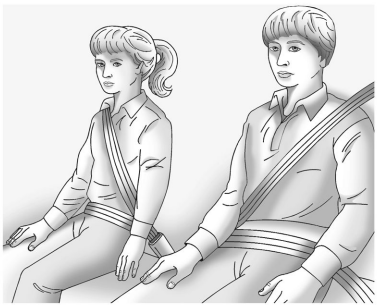

Older children who have outgrown booster seats should wear the vehicle seat belts. See *How to Wear Seat Belts Properly* ⇨ *47*.

The manufacturer instructions that come with the booster seat state the weight and height limitations for that booster. Use a booster seat with a lap-shoulder belt until the child passes the fit test below:

- Sit all the way back on the seat. Do the knees bend at the seat edge? If yes, continue. If no, return to the booster seat.

- Buckle the lap-shoulder belt. Does the shoulder belt rest on the shoulder? If yes, continue. If no, return to the booster seat.
- Does the lap belt fit low and snug on the hips, touching the thighs? If yes, continue. If no, return to the booster seat.
- Can proper seat belt fit be maintained for the length of the trip? If yes, continue. If no, return to the booster seat.

Q: What is the proper way to wear seat belts?

A: An older child should wear a lap-shoulder belt and get the additional restraint a shoulder belt can provide. The shoulder belt should not cross the face or neck. The lap belt should fit snugly below the hips, just touching the top of the thighs. This applies belt force to the child's pelvic bones in a crash. It should never be worn over the abdomen, which could cause severe or even fatal internal injuries in a crash.

According to accident statistics, children are safer when properly restrained in a rear seating position.

In a crash, children who are not buckled up can strike other people who are buckled up, or can be thrown out of the vehicle. Older children need to use seat belts properly.

⚠ Warning

Never allow more than one child to wear the same seat belt. The seat belt cannot properly spread the impact forces. In a crash, they can be crushed together and seriously injured. A seat belt must be used by only one person at a time.



⚠ Warning

Never allow a child to wear the seat belt shoulder belt under both arms or behind their back. A child can be seriously injured by not wearing the lap-shoulder belt properly. In a crash, the child would not be restrained by the shoulder belt. The child could move too far forward increasing the chance of head and neck injury. The child might also slide under the lap belt. The belt force would then be applied right on the abdomen. That could cause serious or fatal injuries. The shoulder belt should go over the shoulder and across the chest.



⚠ Warning

Children can be seriously injured or killed if the shoulder belt is worn behind their back, under their legs, or wrapped around their neck. The shoulder belt can tighten but cannot be loosened if it is locked. The shoulder belt locks when it is pulled all the way out of the retractor. It unlocks when the shoulder belt is allowed to go all the way back into the retractor, but it cannot do this if it is wrapped around the child. Never leave children unattended in a vehicle and never allow children to improperly wear, or play with, the seat belts.

Infants and Young Children

Everyone in a vehicle needs protection! This includes infants and all other children. Neither the distance traveled nor the age and size of the traveler changes the need, for everyone, to use safety restraints. In fact, the law in every state in the United States and in every Canadian province says children up to some age must be restrained while in a vehicle.

⚠ Warning

Children can be seriously injured or killed if the shoulder belt is worn behind their back, under their legs, or wrapped around their neck. The shoulder belt can tighten but cannot be loosened if it is locked. The shoulder belt locks when it is pulled all the way out of the retractor. It unlocks when the shoulder belt is allowed to go all the way back into the retractor, but it cannot do this if it is wrapped around the child. Never leave children unattended in a vehicle and never allow children to improperly wear, or play with, the seat belts.

Every time infants and young children ride in vehicles, they should have the protection provided by appropriate child restraints. Neither the vehicle seat belt system nor its airbag system is designed for them.

Children who are not restrained properly can strike other people, or can be thrown out of the vehicle.

⚠ Warning

Never hold an infant or a child while riding in a vehicle. Due to crash forces, an infant or a child will become so heavy it is not possible to hold it during a crash. For example, in a crash at only 40 km/h (25 mph), a 5.5 kg (12 lb) infant will suddenly become a 110 kg (240 lb) force on a person's arms. An infant or child should be secured in an appropriate child restraint.



⚠ Warning

Children who are up against, or very close to, any airbag when it inflates can be seriously injured or killed. Never put a rear-facing child restraint in the front outboard seat. Secure a rear-facing child restraint in a rear seat. It is also better to secure a forward-facing child restraint in a rear seat. If you must secure a forward-facing child restraint in the front outboard seat, always move the front passenger seat as far back as it will go.



⚠ Warning

To reduce the risk of neck and head injury in a crash, infants and toddlers should be secured in a rear-facing child restraint until age two, or until they reach the maximum height and weight limits of their child restraint.

⚠ Warning

A young child's hip bones are still so small that the vehicle seat belt may not remain low on the hip bones, as it should. Instead, it may settle up around the child's abdomen. In a crash, the belt would apply force on a body area that is unprotected by any bony structure. This alone could cause serious or fatal injuries. To reduce the risk of serious or fatal injuries during a crash, young children should always be secured in an appropriate child restraint.

Child restraints are devices used to restrain, seat, or position children in the vehicle and are sometimes called child seats or car seats.

There are three basic types of child restraints:

- Forward-facing child restraints
- Rear-facing child restraints
- Belt-positioning booster seats

The proper child restraint for your child depends on their size, weight, and age, and also on whether the child restraint is compatible with the vehicle in which it will be used.

For each type of child restraint, there are many different models available. When purchasing a child restraint, be sure it is designed to be used in a motor vehicle and is designed by a genuine child restraint manufacturer. If it is, the child restraint will have a label saying that it meets federal motor vehicle safety standards.

The instruction manual that is provided with the child restraint states the weight and height limitations for that particular child restraint. In addition, there are many kinds of child restraints available for children with special needs.

Child Restraint Systems

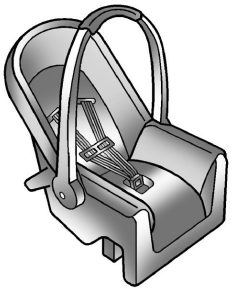

Rear-Facing Infant Restraint

A rear-facing child restraint provides restraint with the seating surface against the back of the infant.

The harness system holds the infant in place and, in a crash, acts to keep the infant positioned in the restraint.



Forward-Facing Child Restraint

A forward-facing child restraint provides restraint for the child's body with the harness.

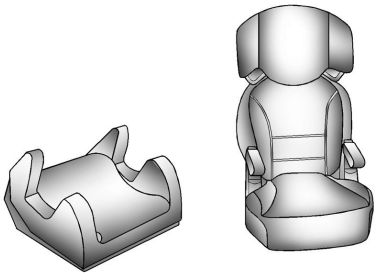

Booster Seats

A belt-positioning booster seat is used for children who have outgrown their forward-facing child restraint. Boosters are designed to improve the fit of the vehicle seat belt system until the child is large enough for the vehicle seat belts to fit properly without a booster seat. See the seat belt fit test in *Older Children* ➪ *63*.

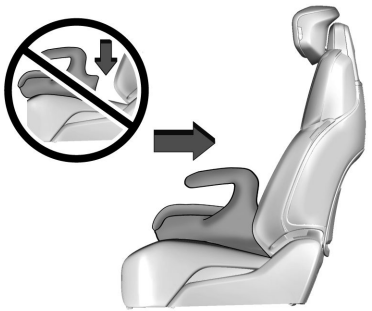

Backless Booster

Backless booster fitment requirement:

Some backless booster seats are not suitable for rear seats that have oversized side seat bolsters, as they can push the backless booster forward from the seat back.

To use a backless booster:

1. Center the booster on the seat cushion.
2. Ensure the backless booster seat contacts the seat back.

If the backless booster does not meet the fit test described in Steps 1–2, select another booster seat.

Securing an Add-On Child Restraint in the Vehicle

⚠ Warning

Each top-tether anchor is designed to anchor only one child restraint. Do not attach more than one child restraint to a single top-tether anchor. The anchor may come loose or break, potentially causing personal injury, property damage, or death.

⚠ Warning

A child can be seriously injured or killed in a crash if the child restraint is not properly secured in the vehicle. Secure the child restraint properly in the vehicle using the vehicle seat belt or LATCH system, following the instructions that came with that child restraint and the instructions in this manual.

To help reduce the chance of injury, the child restraint must be secured in the vehicle. Child restraints must be secured in vehicle seats by the lap belt portion of a lap-shoulder belt, or by the LATCH system. See *Lower Anchors and Tethers for Children (LATCH System)* ⇨ *70* for more information. Never use a seat belt extender when installing a child restraint. Never use non-regulated aftermarket anchors or attachments to secure a child restraint. Children can be endangered in a crash if the child restraint is not properly secured in the vehicle.

When securing an add-on child restraint, see the following:

- Instruction labels provided on the child restraint
- Instruction manual provided with the child restraint
- This vehicle owner's manual

The child restraint instructions are important, so if they are not available, obtain a replacement copy from the manufacturer.

Keep in mind that an unsecured child restraint can move around in a collision or sudden stop and injure people in the vehicle. Be sure to properly secure any child restraint in the vehicle — even when no child is in it.

In some areas Certified Child Passenger Safety Technicians (CPSTs) are available to inspect and demonstrate how to correctly

use and install child restraints. In the U.S., see the National Highway Traffic Safety Administration (NHTSA) website to locate the nearest child safety seat inspection station. For CPST availability in Canada, check with Transport Canada or the Provincial Ministry of Transportation office.

Securing the Child Within the Child Restraint

⚠ Warning

A child can be seriously injured or killed in a crash if the child is not properly secured in the child restraint. Secure the child properly following the instructions that came with that child restraint.

Where to Put the Restraint

According to accident statistics, children and infants are safer when properly restrained in an appropriate child restraint secured in a rear seating position.

Whenever possible, children aged 12 and under should be secured in a rear seating position.

Never put a rear-facing child restraint in the front. This is because the risk to the rear-facing child is so great if the airbag deploys.

⚠ Warning

A child in a rear-facing child restraint can be seriously injured or killed if the front passenger airbag inflates. This is because the back of the rear-facing child restraint would be very close to the inflating airbag. A child in a forward-facing child restraint can be seriously injured or killed if the front passenger airbag inflates and the passenger seat is in a forward position.

Even if the passenger sensing system has turned off the front passenger frontal airbag, no system is fail-safe. No one can guarantee that an airbag will not deploy under some unusual circumstance, even though it is turned off.

Secure rear-facing child restraints in a rear seat, even if the airbag is off. If you secure a forward-facing child restraint in the front seat, always move the front passenger seat as far back as it will go. It is better to secure the child restraint in a rear seat.

(Continued)

Warning (Continued)

See *Passenger Sensing System* ⇨ *58* for additional information.

When securing a child restraint with the seat belts in a rear seat position, study the instructions that came with the child restraint to make sure it is compatible with this vehicle.

Child restraints and booster seats vary considerably in size, and some may fit in certain seating positions better than others. Do not install a child restraint in any rear seating position where it cannot be installed securely.

Depending on where you place the child restraint and the size of the child restraint, you may not be able to access adjacent seat belts or LATCH anchors for additional passengers or child restraints. Adjacent seating positions should not be used if the child restraint prevents access to or interferes with the routing of the seat belt.

Adjust the seat in front of a child restraint to ensure proper installation according to the child restraint manual. Move the front

seat forward to avoid contact between the child restraint and the seat or any accessories mounted to the seat.

Wherever a child restraint is installed, be sure to follow the instructions that came with the child restraint and secure the child restraint properly.

Keep in mind that an unsecured child restraint can move around in a collision or sudden stop and injure people in the vehicle. Be sure to properly secure any child restraint in the vehicle — even when no child is in it.

Lower Anchors and Tethers for Children (LATCH System)

The LATCH system secures a child restraint during driving or in a crash. LATCH attachments on the child restraint are used to attach the child restraint to the anchors in the vehicle. This system is designed to make installation of a child restraint easier.

In order to use the LATCH system in your vehicle, you need a child restraint that has LATCH attachments. LATCH-compatible rear-facing and forward-facing child seats can be properly installed using either the LATCH anchors or the vehicle's seat belts. Do not use both the seat belts and the LATCH anchorage system to secure a rear-facing or forward-facing child restraint.

Booster seats use the vehicle's seat belts to secure the child and the booster seat. If the manufacturer recommends that the booster seat be secured with the LATCH system, this can be done as long as the booster seat can be positioned properly and there is no interference with the proper positioning of the lap-shoulder belt on the child.

Make sure to follow the instructions that came with the child restraint, and also the instructions in this manual.

When installing a child restraint with a top tether, you must also use either the lower anchors or the seat belts to properly secure the child restraint. A child restraint must never be attached using only the top tether.

For a forward-facing five-point harness child restraint where the combined weight of the child and restraint are up to 29.5 kg (65 lb), use either the lower LATCH anchorages with the top tether anchorage, or the seat belt with the top tether anchorage. Where the combined weight of the child and restraint are greater than 29.5 kg (65 lb), use the seat belt with the top tether anchorage only.

Recommended Methods for Attaching Child Restraints

Restraint Type	**Combined Weight of the Child + Child Restraint**	**Use Only Approved Attachment Methods Shown with an X**			
		LATCH – Lower Anchors Only	**Seat Belt Only**	**LATCH** – Lower Anchors and Top Tether Anchor	**Seat Belt and Top Tether Anchor**
Rear-Facing Child Restraint	Up to 29.5 kg (65 lb)	**X**	**X**		
Rear-Facing Child Restraint	Greater than 29.5 kg (65 lb)		**X**		
Forward-Facing Child Restraint	Up to 29.5 kg (65 lb)			**X**	**X**
Forward-Facing Child Restraint	Greater than 29.5 kg (65 lb)				**X**

See *Securing Child Restraints (With the Seat Belt in the Front Seat)* ⇨ *78 Securing Child Restraints (With the Seat Belt in the Rear Seat)* ⇨ *76*.

Child restraints built after March 2014 are labeled with the maximum child weight, with which the LATCH system can be used for installing the child restraint.

The following explains how to attach a child restraint with these attachments in the vehicle.

Not all vehicle seating positions have lower anchors. In this case, the seat belt must be used (with top tether where available) to secure the child restraint. See *Securing Child*

Restraints (With the Seat Belt in the Front Seat) ⇨ *78 Securing Child Restraints (With the Seat Belt in the Rear Seat)* ⇨ *76*.

Lower Anchors

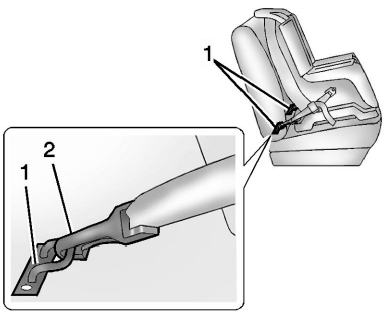

Lower anchors (1) are metal bars built into the vehicle. There are two lower anchors for each LATCH seating position that will accommodate a child restraint with lower attachments (2).

Top Tether Anchor

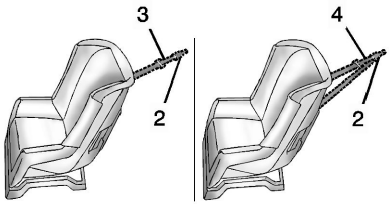

A top tether (3, 4) is used to secure the top of the child restraint to the vehicle. A top tether anchor is built into the vehicle. The top tether attachment hook (2) on the child restraint connects to the top tether anchor in the vehicle in order to reduce the forward movement and rotation of the child restraint during driving or in the event of a crash.

The child restraint may have a single tether (3) or a dual tether (4). Either will have a single attachment hook (2) to secure the top tether to the anchor.

Some child restraints with a top tether are designed for use with or without the top tether being attached. Others require the top tether always to be attached. In Canada, the law requires that forward-facing child restraints have a top tether, and that the tether be attached. Be sure to read and follow the instructions for your child restraint.

Lower Anchor and Top Tether Anchor Locations

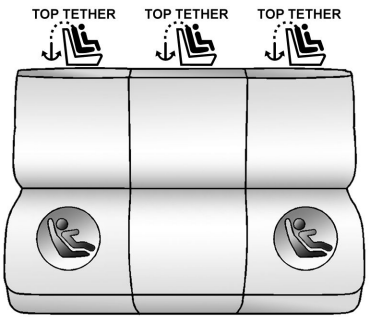

Rear Seat

TOP TETHER : Seating positions with top tether anchors.

: Seating positions with two lower anchors.



To assist in locating the lower anchors, each seating position with lower anchors has two labels with the lower anchor symbol on them, near the crease between the seatback and the seat cushion.

Lift the flap below the label to access the anchors.



Do not install a child restraint that requires lower anchors in the center rear seating position. See *Securing Child Restraints (With the Seat Belt in the Front Seat)* ⇨ *78 Securing Child Restraints (With the Seat Belt in the Rear Seat)* ⇨ *76*.



To assist in locating the top tether anchors, the top tether anchor symbol is near the top tether anchors.

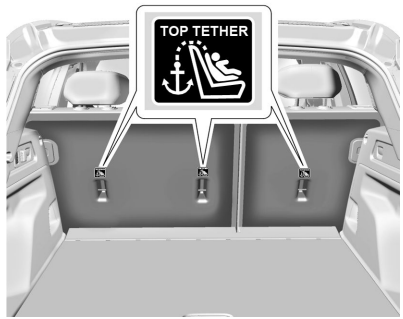

Top Tether Anchors

The top tether anchors for each rear seating position are on the back of the rear seatback. Be sure to use an anchor located directly behind the seating position where the child restraint will be placed.

For models with a cargo cover, the top tether anchors are on the back of the rear seatbacks. Remove the cargo cover before installing the top tether. The cargo cover should remain off while the top tether is in use. Be sure to use an anchor directly behind the seating position where the child restraint will be placed.

Do not secure a child restraint in a position without a top tether anchor if a national or local law requires that the top tether be attached, or if the instructions that come with the child restraint say that the top tether must be attached.

According to accident statistics, children and infants are safer when properly restrained in a child restraint system or infant restraint system secured in a rear seating position. See *Where to Put the Restraint* ⇨ *69* for additional information.

Securing a Child Restraint Designed for the LATCH System

⚠ Warning

A child could be seriously injured or killed in a crash if the child restraint is not properly attached to the vehicle using either the LATCH anchors or the vehicle seat belt. Follow the instructions that came with the child restraint and the instructions in this manual.

⚠ Warning

To reduce the risk of serious or fatal injuries during a crash, do not attach more than one child restraint to a single anchor. Attaching more than one child restraint to a single anchor could cause the anchor or attachment to come loose or even break during a crash. A child or others could be injured.

⚠ Warning

Children can be seriously injured or strangled if a shoulder belt is wrapped around their neck. The shoulder belt can tighten but cannot be loosened if it is locked. The shoulder belt locks when it is pulled all the way out of the retractor. It unlocks when the shoulder belt is allowed to go all the way back into the retractor, but it cannot do this if it is wrapped around a child's neck. If the shoulder belt is locked and tightened around a child's neck, the only way to loosen the belt is to cut it.

(Continued)

Warning (Continued)

Buckle any unused seat belts behind the child restraint so children cannot reach them. Pull the shoulder belt all the way out of the retractor to set the lock, and tighten the belt behind the child restraint after the child restraint has been installed.

Caution

Do not let the LATCH attachments rub against the vehicle's seat belts. This may damage these parts. If necessary, move buckled seat belts to avoid rubbing the LATCH attachments.

Do not fold the rear seatback when the seat is occupied. Do not fold the empty rear seat with a seat belt buckled. This could damage the seat belt or the seat. Unbuckle and return the seat belt to its stowed position, before folding the seat.

If you need to secure more than one child restraint in the rear seat, see *Where to Put the Restraint* ⇨ *69*.

1. Attach and tighten the lower attachments to the lower anchors. If the child restraint does not have lower attachments or the desired seating position does not have lower anchors, secure the child restraint with the top tether and the seat belt. Refer to the child restraint manufacturer instructions and the instructions in this manual.
   - 1.1 Find the lower anchors for the desired seating position.
   - 1.2 Put the child restraint on the seat.
   - 1.3 Attach and tighten the lower attachments on the child restraint to the lower anchors.
2. If the child restraint manufacturer recommends that the top tether be attached, adjust the top tether to its full length and attach it to the anchor. Refer to the child restraint instructions and the following steps:
   - 2.1 Find the top tether anchor.
   - 2.2 If you have an adjustable headrest or head restraint, raise the headrest or head restraint.
   - 2.3 Route, attach and tighten the top tether according to your child restraint instructions and the following instructions:

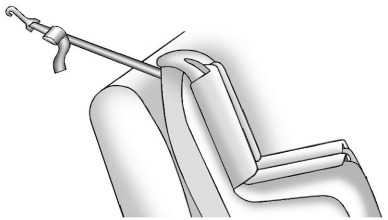

- If the position you are using does not have a headrest or head restraint and you are using a single tether, route the tether over the seatback.

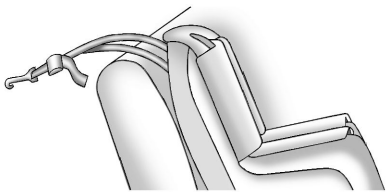

- If the position you are using does not have a headrest or head restraint and you are using a dual tether, route the tether over the seatback.

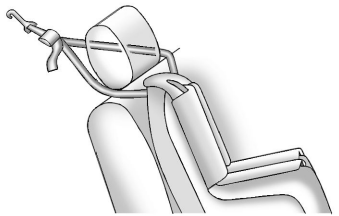

- If the position you are using has an adjustable headrest or head restraint, adjust it accordingly to allow proper fitment. If you are using a dual tether, route the tether around the headrest or head restraint posts.

  If the child restraint is installed next to a center seat, make sure the top tether does not interfere with the center seating position shoulder belt/retractor. If it does, find another suitable seating position to install the child restraint.

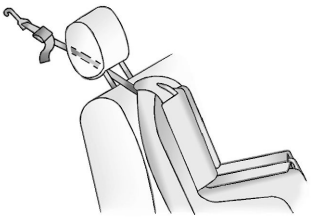

- If the position you are using has an adjustable headrest or head restraint, adjust it accordingly to allow proper fitment. If you are using a single tether, route the tether in between the headrest or head restraint posts.

3. Before placing a child in the child restraint, make sure it is securely held in place. To check, firmly grip the child restraint at the LATCH path and attempt to move it side to side and back and forth. There should be no more than 2.5 cm (1 in) of movement for proper installation.

Replacing LATCH System Parts After a Crash

⚠ Warning

A crash can damage the LATCH system in the vehicle. A damaged LATCH system may not properly secure the child restraint, resulting in serious injury or even death in a crash. To help make sure the LATCH system is working properly after a crash, see your dealer to have the system inspected and any necessary replacements made as soon as possible.

If the vehicle has the LATCH system and it was being used during a crash, new LATCH system parts may be needed.

New parts and repairs may be necessary even if the LATCH system was not being used at the time of the crash.

Securing Child Restraints (With the Seat Belt in the Rear Seat)

When securing a child restraint with the seat belts in a rear seat position, study the instructions that came with the child restraint to make sure it is compatible with this vehicle.

If the child restraint has the LATCH system, see *Lower Anchors and Tethers for Children (LATCH System)* ⇨ *70* for how and where to install the child restraint using LATCH. If a child restraint is secured in the vehicle using a seat belt and it uses a top tether, see *Lower Anchors and Tethers for Children (LATCH System)* ⇨ *70* for top tether anchor locations.

Do not secure a child seat in a position without a top tether anchor if a national or local law requires that the top tether be anchored, or if the instructions that come with the child restraint say that the top strap must be anchored. See the instructions that came with the child restraint and see *Lower Anchors and Tethers for Children (LATCH System)* ⇨ *70*.

In Canada, the law requires that forward-facing child restraints have a top tether, and that the tether be attached.

If the child restraint or vehicle seat position does not have the LATCH system, you will be using the seat belt to secure the child restraint. Be sure to follow the instructions that came with the child restraint.

If more than one child restraint needs to be installed in the rear seat, be sure to read *Where to Put the Restraint* ⇨ *69*.

1. Put the child restraint on the seat.
2. Pick up the latch plate and run the lap and shoulder portions of the vehicle seat belt through or around the child restraint. Ensure the seat belt webbing is routed as directly as possible and is not caught on seat handles or plastic trim. The child restraint instructions will show you how.



3. Push the latch plate into the buckle until it clicks.

   Position the release pushbutton on the buckle, away from the child restraint, so that the seat belt could be quickly unbuckled if necessary.

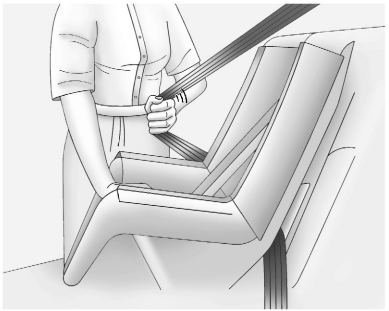

4. Pull the shoulder belt all the way out of the retractor to set the lock. When the retractor lock is set, the belt can be tightened but not pulled out of the retractor.

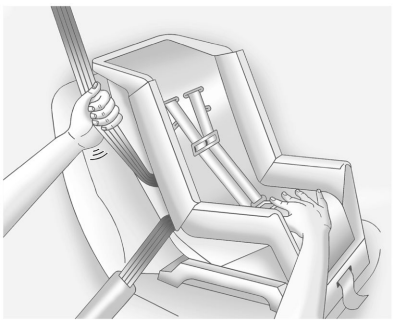

5. To tighten the belt, push down on the child restraint, pull the shoulder portion of the belt to tighten the lap portion of the belt, and feed the shoulder belt back into the retractor. When installing a forward-facing child restraint, it may be helpful to use your knee to push down on the child restraint as you tighten the belt.

   There must not be direct contact of the child restraint to the buckle release pushbutton. If there is contact, reposition the child restraint using the instructions that came with the child restraint. If there is still contact, use another seating position or child restraint.

   Try to pull the belt out of the retractor to make sure the retractor is locked. If the retractor is not locked, repeat Steps 4 and 5.

6. Tighten the top tether. See *Lower Anchors and Tethers for Children (LATCH System)* ⇨ *70*.

7. If the child restraint has a top tether, follow the child restraint manufacturer's instructions regarding the use of the top tether. See *Lower Anchors and Tethers for Children (LATCH System)* ⇨ *70*.

8. Before placing a child in the child restraint, make sure it is securely held in place. To check, firmly grip the child restraint at the seat belt path and attempt to move it side to side and back and forth. When the child restraint is properly installed, there should be no more than 2.5 cm (1 in) of movement.

To remove the child restraint, unbuckle the vehicle seat belt and let it return to the stowed position. If the top tether is attached to a top tether anchor, disconnect it.

Many child restraints are too wide to be correctly secured in the center rear seat, although some will fit there. If the center seat position is too narrow for the child restraint, secure it in a rear outboard seat position.

If a rear-facing child restraint is installed in the rear center seat, ensure that the second-row arm rest remains in the stowed (closed) position. If the arm rest cannot be stowed, or if the armrest can open fully, install the child restraint in another seating position.

Securing Child Restraints (With the Seat Belt in the Front Seat)

This vehicle has airbags.

A rear seat is a safer place to secure a forward-facing child restraint. See *Where to Put the Restraint* ⇨ *69*.

In addition, the vehicle has a passenger sensing system which is designed to turn off the front outboard passenger frontal airbag and knee airbag under certain conditions. See *Passenger Sensing System* ⇨ *58* and *Passenger Airbag Status Indicator* ⇨ *98* for more information, including important safety information.

Never put a rear-facing child seat in the front. This is because the risk to the rear-facing child is so great if the airbag deploys.

⚠ Warning

A child in a rear-facing child restraint can be seriously injured or killed if the front outboard passenger frontal airbag inflates. This is because the back of the rear-facing child restraint would be very close to the inflating airbag. A child in a forward-facing child restraint can be seriously injured or killed if the front outboard passenger frontal airbag inflates and the passenger seat is in a forward position.

(Continued)

Warning (Continued)

Even if the passenger sensing system has turned off the front outboard passenger airbag(s), no system is fail-safe. No one can guarantee that an airbag will not deploy under some unusual circumstance, even though the airbag(s) are off.

Secure rear-facing child restraints in a rear seat, even if the airbag(s) are off. If you secure a forward-facing child restraint in the front outboard passenger seat, always move the seat as far back as it will go. It is better to secure the child restraint in a rear seat.

See *Passenger Sensing System* ⇨ *58* for additional information.

If the child restraint uses a top tether, see *Lower Anchors and Tethers for Children (LATCH System)* ⇨ *70* for top tether anchor locations.

Do not secure a child seat in a position without a top tether anchor if a national or local law requires that the top tether be anchored, or if the instructions that come with the child restraint say that the top tether must be anchored.

In Canada, the law requires that forward-facing child restraints have a top tether, and that the tether be attached.

When using the lap-shoulder belt to secure the child restraint in this position, follow the instructions that came with the child restraint and the following instructions:

1. Move the seat as far back as it will go before securing the forward-facing child restraint. Move the seat upward or the seatback to an upright position, if needed, to get a tight installation of the child restraint.

   When the passenger sensing system has turned off the front outboard passenger frontal airbag and knee airbag, the OFF indicator on the passenger airbag status indicator should light and stay lit when you start the vehicle. See *Passenger Airbag Status Indicator* ⇨ *98*.
2. Put the child restraint on the seat.
3. Pick up the latch plate and run the lap and shoulder portions of the vehicle seat belt through or around the restraint. Ensure the seat belt webbing is routed as direct as possible and is not caught on seat handles or plastic trim. The child restraint instructions will show you how.

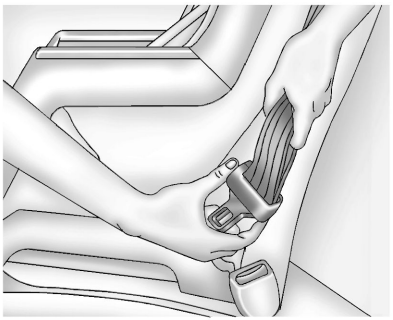

Tilt the latch plate to adjust the belt if needed.



4. Push the latch plate into the buckle until it clicks.

   Position the release pushbutton on the buckle, away from the child restraint, so that the seat belt could be quickly unbuckled if necessary.

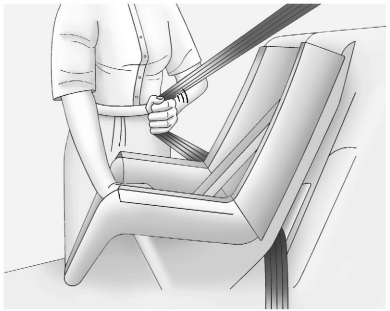

5. Pull the shoulder belt all the way out of the retractor to set the lock. When the retractor lock is set, the belt can be tightened but not pulled out of the retractor.

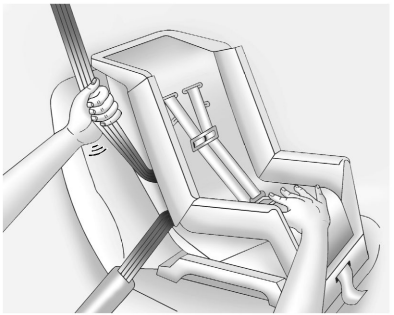

6. To tighten the belt, push down on the child restraint, pull the shoulder portion of the belt to tighten the lap portion of the belt, and feed the shoulder belt back into the retractor.

   When installing a forward-facing child restraint, it may be helpful to use your knee to push down on the child restraint as you tighten the belt.

   There must not be direct contact of the child restraint to the buckle release pushbutton. If there is contact, move the seat upward and repeat prior installation steps. If there is still contact, reposition the child restraint using the instructions that came with the child restraint. If there is still contact, use another seating position or child restraint.

   Try to pull the belt out of the retractor to make sure the retractor is locked. If the retractor is not locked, repeat Steps 5 and 6.

7. Before placing a child in the child restraint, make sure it is securely held in place. To check, firmly grip the child restraint at the seat belt path and attempt to move it side to side and back and forth. When the child restraint is properly installed, there should be no more than 2.5 cm (1 in) of movement.

If the airbags are off, the off indicator in the passenger airbag status indicator will come on and stay on when the vehicle is started.

If a child restraint has been installed and the ON indicator is lit, see "If the On Indicator Is Lit for a Child Restraint" under *Passenger Sensing System* ⇨ *58*.

To remove the child restraint, unbuckle the vehicle seat belt and let it return to the stowed position.

Storage

Storage Compartments
Storage Compartments 81
Instrument Panel Storage 81
Glove Box 81
Cupholders 81
Center Console Storage 82
Additional Storage Features
Cargo Cover 82
Cargo Tie-Downs 83
Cargo Management System 83
Roof Rack System
Roof Rack System 84

Storage Compartments

Warning

Do not store heavy or sharp objects in storage compartments. In a crash, these objects may cause the cover to open and could result in injury.

Instrument Panel Storage

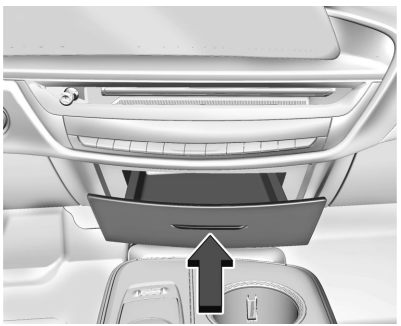

If equipped, there is an upper sliding drawer in the center of the instrument panel. Press to open.

Glove Box

To open the glove box:

- Select the Glove Box Release icon, on the app screen of the infotainment display.
- Select Controls > Doors & Windows > Glove Box Release on the infotainment app screen.
- If the vehicle is stationary, the Glove Box Release icon appears on the infotainment app screen.
- When the vehicle is off, you can still open the glove box. Press the volume scroll wheel on the Multi-Function Controller to wake the infotainment app screen and select the .

If the 12-volt battery is dead, the glove box will not open. See *Jump Starting - North America* ⇨ *325*.

To close the glove box, push the glove box up until it latches.

Cupholders

The front cupholders are in the center console.



If equipped, lower the armrest to access the rear cupholders.

Center Console Storage



Lift the armrest up to access the storage area.

There is a USB port, an SD card reader, and an auxiliary power outlet. If equipped, the front of the console may also have an additional USB port.

Additional Storage Features

Cargo Cover

⚠ Warning

An unsecured cargo cover could strike people in a sudden stop or turn, or in a crash. Store the cargo cover securely or remove it from the vehicle.

⚠ Warning

Do not place objects on the cargo cover. Sudden stops or turns can cause objects to be thrown in the vehicle. You or others could be injured.



If equipped, use the cargo cover to cover items in the rear of the vehicle.

Install the Cargo Cover

1. Hold the cartridge so that the retracted cargo cover faces the rear of the vehicle.
2. Align the cartridge over the slots on the trim panels of the vehicle.
3. Place one end of the cartridge into the slot and then compress to fit the other end into the remaining slot.
4. Unroll the cargo cover toward the rear of the vehicle.

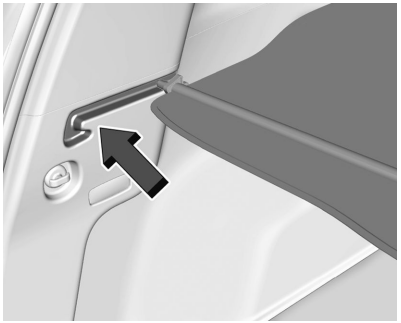

5. Insert the cargo cover pins into the channels on both sides.

Remove the Cargo Cover

Remove the cargo cover pins from the channels and let the cover retract. Compress the ends of the cartridge to remove it from the slots.

Store the Cargo Cover

To store the cargo cover:



1. Press the buttons on both ends until locked.



2. Store under the load floor.

To reinstall, press the buttons to unlock the ends of the cover, and then follow the installation procedure.

Cargo Tie-Downs



The vehicle has four cargo tie-downs in the rear compartment.

Cargo Management System

Caution
Overloading the cargo management system can cause damage to the vehicle. Do not place cargo that weighs more than 20 kg (44 lb) in the bin or on top of the plastic lid (if equipped).

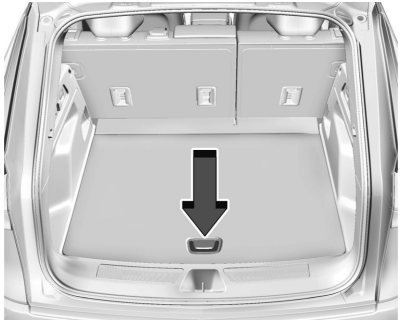

There is storage under the load floor.

To access, press the handle and pull up the load floor.

Roof Rack System

⚠ Warning

Before driving and occasionally during a trip, check that cargo is securely fastened, rests evenly between the cross rails and does not block the vehicle's lights or windows. Never load cargo directly on the roof of the vehicle or allow cargo to hang

(Continued)

Warning (Continued)

over the rear or sides of the vehicle. Never load cargo without first properly installing cross rails and other accessories designed to carry cargo. Personal injury, death or damage to the vehicle or other property may occur.

The vehicle has indents along the roof above the doors that can be used to install a cross rail system. Cargo must be secured with properly installed cross rails and other accessories designed to carry cargo. These can be purchased from your dealer.

Cargo Weight Limits

⚠ Warning

Never load the roof rack with more weight than specified in this section. Loading cargo on the roof rack will make the vehicle's center of gravity higher. To avoid losing control of the vehicle, avoid overloading, high speeds, sudden starts, sharp turns, sudden braking, or abrupt maneuvers when carrying cargo on the roof rack.

Do not exceed the maximum cargo weight for the roof rack system, including the weight of the cross rails and any other accessories used to carry the cargo such as bike racks or roof boxes. The maximum cargo weight that can be loaded onto the roof rack system is 50 kg (110 lb) or the weight designated in the instructions that came with the cross rails or other roof rack accessories, whichever is less.

The weight of any cargo carried on the roof rack system must be included in calculating the loaded weight of the vehicle. Do not exceed the maximum vehicle capacity when loading the vehicle, including cargo carried on the roof rack system and passengers and cargo carried in the vehicle. For more information on vehicle capacity and loading, see *Vehicle Load Limits* ⇨ 177.

Instructions and Controls

Controls

Steering Wheel Adjustment 86
Heated Steering Wheel 86
Horn 86
Pedestrian Safety Signal 86
Windshield Wiper/Washer 87
Compass 88
Clock 88
Power Outlets 88
Wireless Charging 90

Warning Lights, Gauges, and Indicators

Warning Lights, Gauges, and Indicators 91
Instrument Cluster 93
Speedometer 95
Odometer 95
Trip Odometer 95
Battery Gauge (High Voltage) 95
Power Indicator Gauge 96
Seat Belt Reminders 96
Airbag Readiness Light 98
Passenger Airbag Status Indicator 98
Charging System Light (12-Volt Battery) .. 99
Low State of Charge Light 99
Charge Cord Connected Light 99
Battery Fault Light 100
Propulsion Power is Limited Light 100
Service Vehicle Soon Light (Propulsion System Failure) 100
Brake System Warning Light 100
Electric Parking Brake Light 101
Service Electric Parking Brake Light 101
Antilock Brake System (ABS) Warning Light 101
Service All-Wheel Drive Light 102
Automatic Vehicle Hold (AVH) Light 102
Lane Keep Assist (LKA) Light 102
Hands-On Steering Assist Light (Lane Centering Assistance) 102
Automatic Emergency Braking (AEB) Disabled Light 103
Vehicle Ahead Indicator 103
Pedestrian Ahead Indicator 103
Follow Distance Indicator Light 103
Traction Off Light 104
Traction Control System (TCS)/ Electronic Stability Control Light 104
Electronic Stability Control (ESC) Off Light 104
Driver Mode Control Light 105
Tire Pressure Light 105
Security Light 106
Vehicle Ready Light 106
High-Beam On Light 106
Service Headlight System Indicator 106
Lights On Reminder 106
Cruise Control Light 107
Adaptive Cruise Control Light 107
Super Cruise Light 107
Door Ajar Light 107

Information Displays

Charging 107
Driver Information Center (DIC) 113
Vehicle Status 114
Head-Up Display (HUD) 116

Vehicle Messages

Vehicle Messages 118
Propulsion Power Messages 119
Vehicle Speed Messages 119

Universal Remote System

Universal Remote System Programming (Garage Door Opener) 119
Universal Remote System Operation (Garage Door Opener) 121

Controls

Steering Wheel Adjustment

Power Tilt and Telescoping Steering Wheel

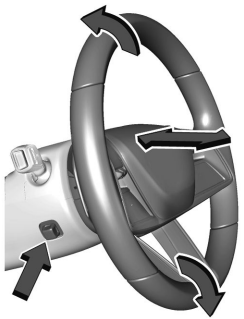

To adjust the steering wheel:

1. Press the control up or down to tilt the steering wheel up or down.
2. Press the control rearward or forward to move the steering wheel closer or away from you.

Do not adjust the steering wheel while driving.

Heated Steering Wheel

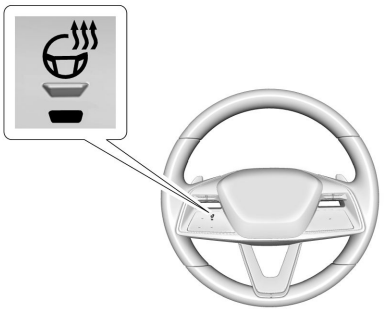

: Press to turn the heated steering wheel on or off. An indicator below the button is lit when the feature is turned on.

The steering wheel takes about three minutes to start heating.

Automatic Heated Steering Wheel

The heated steering wheel may turn on during a remote start along with the heated seats when it is cold outside. The heated steering wheel indicator may come on in remote start.

The heated steering wheel will turn on when the auto heated seat is activated. The heated steering wheel indicator will display the state of the steering wheel heat.

See *Heated and Ventilated Front Seats* ⇨ *41*.

Horn

To sound the horn, press on the steering wheel.

Pedestrian Safety Signal

The vehicle is equipped with automatic sound generation. The automatic sound is generated to indicate the vehicle presence to pedestrians. The sound changes if the vehicle is speeding up or slowing down. It is activated when the vehicle is driving or shifted into a forward gear, N (Neutral), or R (Reverse), up to driving speeds of 25 km/h (15 mph) or 35 km/h (22 mph), depending on region of sale.

Windshield Wiper/Washer

Warning

In freezing weather, do not use the washer until the windshield is warmed. Otherwise the washer fluid can form ice on the windshield, blocking your vision.

Warning

Before driving the vehicle, always clear snow and ice from the hood, windshield, washer nozzles, roof, and rear of the vehicle, including all lights and windows. Reduced visibility from snow and ice buildup could lead to a crash.

If equipped with Rainsense, a sensor near the top center of the windshield detects the amount of water on the windshield and controls the frequency of the windshield wiper based on the current sensitivity setting.

Keep this area of the windshield clear of debris to allow for best system performance.

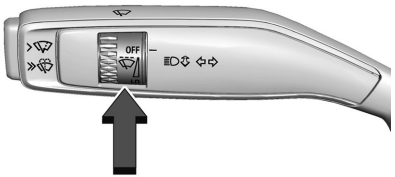

Base Windshield/Washer Lever Shown — Uplevel Similar

With the vehicle on, turn the windshield wiper band to select the wiper speed.

OFF: Use to turn the wipers off.

LO: Use for slow wipes.

HI: Use for fast wipes.

Turn the band to select the frequency of intermittent wipes between OFF and LO.

Clear snow and ice from the entire windshield and wiper blades before using them. If frozen to the windshield, carefully loosen or thaw them. Damaged blades should be replaced. See *Wiper Blade Replacement* ⇨ *293*.

Heavy snow or ice may restrict wiper operation and can overload the wiper motor.

Wiper Arm Assembly Protection

When using an automatic car wash, turn the windshield wiper band to OFF. This disables the automatic Rainsense windshield wipers.

With Rainsense, if the vehicle is in N (Neutral) and the speed is very slow, the wipers will automatically stop at the base of the windshield.

The wiper operations return to normal when the vehicle is no longer in N (Neutral) or the vehicle speed has increased.

Windshield Washer



> : For a single wipe, push the button on the side of the windshield to the first stop position briefly and then release. For several wipes, keep holding at the first stop position for longer and then release.

: Push the button on the side of the windshield wiper lever all the way to the end, beyond the first stop position, to spray washer fluid and activate the wipers. When the button is released, additional wipes may occur depending on how long the windshield washer had been activated. See *Washer Fluid* ⇨ *287* for information on filling the windshield washer fluid reservoir.

Wiper Parking

If the vehicle is turned off while the wipers are on LO or HI, they will immediately stop.

If the windshield wiper lever is then moved to OFF before the driver door is opened or within 10 minutes, the wipers will restart and move to the base of the windshield.

If the vehicle is turned off while the wipers are performing wipes due to windshield washing or Rainsense, the wipers continue to run until they reach the base of the windshield.

Heated Wiper Parking

If equipped, this feature warms the lower area of the windshield where the wiper blades park when the rear window defogger is on, helping to remove frost from the wipers.

: The rear window defogger button is on the climate control panel.

See "Rear Window Defogger" under *Dual Automatic Climate Control System* ⇨ *162*.

Rear Camera Washer

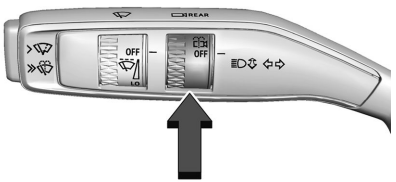

If equipped, turn the band to to spray washer fluid on the rear camera lens. Release the band when done. See *Rear Camera Mirror* ⇨ *28*.

Compass

The vehicle may have a compass display on the Driver Information Center (DIC). The compass receives its heading and other information from the Global Positioning System (GPS) antenna and vehicle speed information. The compass system requires periodic GPS satellite signal updates. When required to calibrate, the compass display shows CAL. Drive the vehicle to the nearest open area where it can receive a GPS signal. The compass system will automatically determine when a GPS signal is restored and provide a heading again.

Clock

Set the time and date using the infotainment system. See "Date/Time" under *Settings* ⇨ *154*.

Power Outlets

Power Outlets 12-Volt Direct Current

⚠ Warning

Power is always supplied to the rear cargo power outlet. Do not leave electrical equipment plugged in when the vehicle is not in use because the vehicle could catch fire and cause injury or death.

Caution

Leaving electrical equipment plugged in for an extended period of time while the vehicle is off will drain the battery. Always unplug electrical equipment when not in use and do not plug in equipment that exceeds the maximum 15 amp rating.

Caution

Hanging heavy equipment from the power outlet can cause damage not covered by the vehicle warranty. The power outlets are designed for accessory power plugs only, such as cell phone charge cords.

The vehicle has two 12-volt outlets that can be used to plug in electrical equipment, such as a cell phone or MP3 player.

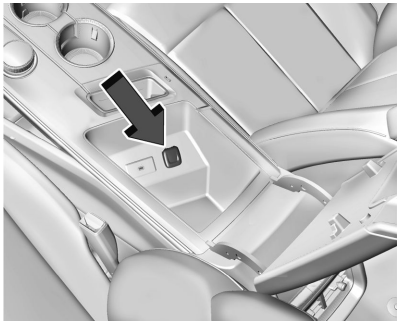

Center Console

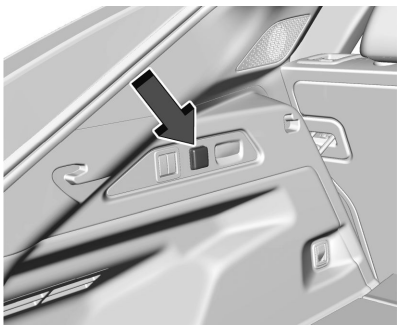

Rear Cargo Area

The power outlets are located:

- Inside of the center console.
- In the rear cargo area.

Lift the cover to access the outlet and replace when not in use.

Certain accessory plugs may not be compatible with the accessory power outlet and could overload vehicle and adapter fuses. If a problem is experienced, see your dealer.

When adding electrical equipment, be sure to follow the proper installation instructions included with the equipment. See *Add-On Electrical Equipment* ⇨ *279*.

Power Outlet 110-Volt/120-Volt Alternating Current

If equipped with this power outlet it can be used to plug in electrical equipment that uses a maximum limit of 150 watts.

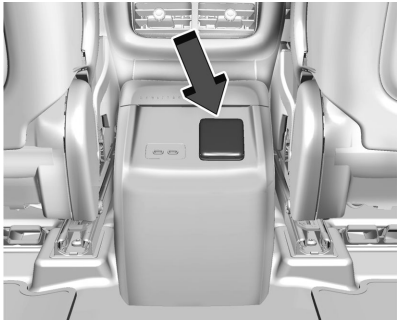

The power outlet is on the rear of the center console.

An indicator light on the outlet turns on to show it is in use. The light comes on when the vehicle is on, equipment requiring less than 150 watts is plugged into the outlet, and no system fault is detected.

The indicator light does not come on when the vehicle is off or if the equipment is not fully seated into the outlet.

If equipment is connected using more than 150 watts or a system fault is detected, a protection circuit shuts off the power supply and the indicator light turns off. To reset the circuit, unplug the item and plug it back in or turn Retained Accessory Power off and then back on. See *Power Modes* ⇨ *181*. The power restarts when equipment using 150 watts or less is plugged into the outlet and a system fault is not detected.

The power outlet is not designed for and may not work properly if the following are plugged in:

- Equipment with high initial peak wattage, such as compressor-driven refrigerators and electric power tools
- Other equipment requiring an extremely stable power supply, such as microcomputer-controlled electric blankets and touch sensor lights
- Medical equipment

Wireless Charging

⚠ Warning

Wireless charging may affect the operation of an implanted pacemaker or other medical devices. If you have one, it is recommended to consult with your doctor before using the wireless charging system.

⚠ Warning

Always keep the wireless charging surface and the back of the phone case clear of coins, keys, rings, paper clips, cards and other objects. The system may not detect the presence of these objects, which could become very hot and cause burns. Remove the phone and allow to cool completely before handling.

Caution

Vehicle key cards, credit cards, hotel key cards, and other Near Field Communication (NFC) cards may be damaged if placed on the charging surface.

If equipped and enabled, the vehicle has wireless charging in front of the center console storage bin. The system operates at 127.7 kHz and can charge one Qi 1.x compatible smartphone per charger at a rate of up to 3 amp (15 W).

To begin charging, the vehicle must be on or Retained Accessory Power must be active. The wireless charging feature may not correctly

indicate charging when the vehicle is in Retained Accessory Power, during a Bluetooth phone call, or when phone projection is active.

The operating temperature is −40 °C (−40 °F) to 85 °C (185 °F) for the charging system and 0 °C (32 °F) to 35 °C (95 °F) for the phone. An alert will display on the infotainment screen if the wireless charger or smartphone are outside of normal operating temperature. Charging will automatically resume when a normal operating temperature is reached.

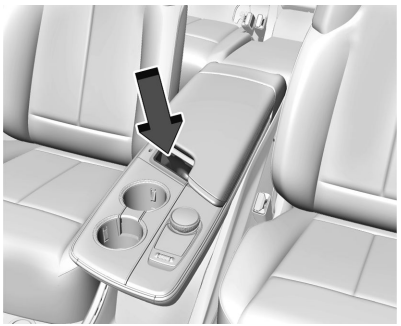

To charge a compatible smartphone:

1. Remove all objects from the charging pocket. The system may not charge if there are any objects between the smartphone and charger.
2. Place the smartphone face up against the rear of the charger.

   A smartphone case may prevent the charger from working, or reduce the charging performance. Be sure the smartphone case is compatible with wireless charging and the back side of the phone is clear of cards and metal objects.
3. A green ⚡ appears on the infotainment display next to the phone icon when the smartphone is detected.

The smartphone may become warm during charging. This is normal. Your phone may take longer to charge in warmer temperatures.

Troubleshooting Wireless Charging

If a smartphone is placed on the charger and a yellow triangle or ⚡ appears, remove the smartphone and any objects from the pocket. Turn the smartphone 180 degrees and wait a few seconds before placing/aligning it on the pocket again.

If a smartphone is placed on the charger and a red ⚡ appears, the charger and/or the smartphone is overheated. Remove the smartphone and any objects from the charger in order to cool the system.

For vehicles with wireless phone projection, the smartphone may overheat during wireless charging. The smartphone may slow down, stop charging, or shut down to protect the battery. The phone may need to be removed from its case to prevent overheating. The ⚡ may flash while the phone is cooling down enough for wireless charging to automatically resume. This is normal. Individual phone performance may vary.

Certain vehicle and smartphone accessories may not be compatible with the wireless charging system. See your dealer for additional information.

Warning Lights, Gauges, and Indicators

Warning lights, gauges, and indicators can alert you to an issue with your vehicle. Some warning lights display briefly to show that they are working when you start the vehicle. However, if a warning light persists while driving, or if a gauge shows there may be a problem, be sure to refer to the sections under “Warning Lights, Gauges, and Indicators.”

Paying attention to your vehicle's warning lights, gauges, and indicators and promptly addressing any issues may help you to prevent an expensive repair or personal injury. Postponing repairs can be costly and even dangerous.

Instrument Cluster

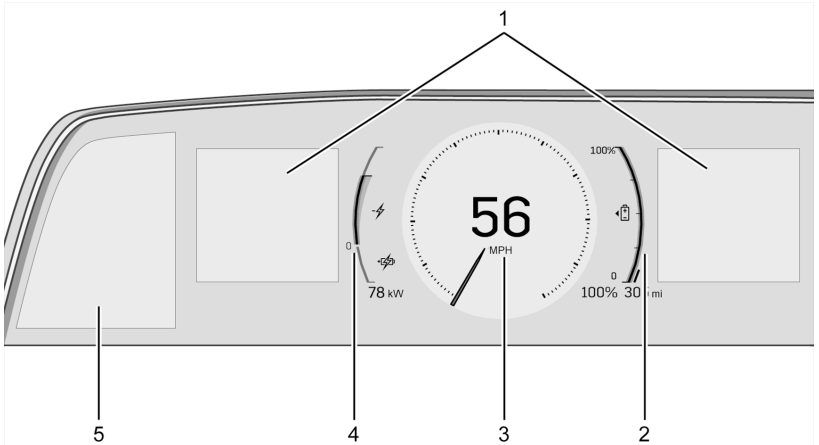

English Tour Mode Gauge View Shown, Others and Metric Similar

1. Driver Information Center. See *Driver Information Center (DIC)* ⇨ *113*.
2. Battery Gauge. See *Battery Gauge (High Voltage)* ⇨ *95*.
3. Speedometer. See *Speedometer* ⇨ *95*.
4. Power Indicator Gauge. See *Power Indicator Gauge* ⇨ *96*.
5. Control Panel. See "Control Panel" later in this section.

Reconfigurable Instrument Cluster

The instrument cluster display layout can be changed. There are two display configurations to choose from based on the driver mode selected: Tour and Sport. To see how to change the Driver Mode, see "Mode Activation" under *Driver Mode Control* ⇨ *192*.

- Tour configuration displays the speedometer in the center of the display. The battery gauge is located on the right of the speedometer and the power indicator gauge is on the left of it. There are two Driver Information Center areas on the left and right of the display.
- Sport configuration displays the speedometer in the center of the display. The battery gauge is located below the speedometer and the power indicator gauge is above it. There are two Driver Information Center areas on the left and right of the display.
- If equipped, Velocity Max mode (V-Series only) configuration displays a torque gauge in place of the power indicator gauge in all selectable views.

The following are selectable views:

Gauge: Displays information zones to the left and right of the speedometer.

Energy: Displays the energy usage of the vehicle.

Map: Displays a navigation map.

Assist: If equipped, displays information for Hands-On Steering Assist (Lane Centering Assistance), Adaptive Cruise Control, Follow Distance, Lane Keep Assist, Forward Collision Alert, and Super Cruise. There is one information zone to the right of the display. There are two gauges located on the bottom of the display.

Clean: Displays no information zones.

To change the cluster configuration, touch ☰ on the control panel to the left of the instrument cluster. Select the desired option from the list.

Selecting a different view could hide the vehicle status displayed in the information zones on the cluster. Once a view with information zones is selected, the last selected vehicle status will be displayed. See *Driver Information Center (DIC)* ⇨ *113* and *Vehicle Status* ⇨ *114*.

Control Panel

There is a touchscreen to the left of the instrument cluster. Use it for the following:

List Page

Touch ☰ to view and select the available list options. View options by swiping right or left on the touchscreen.

Lane Keep Assist

If equipped, touch to select the available Lane Keep Assist options. See *Lane Keep Assist (LKA)* ⇨ *258*.

Headlights

If equipped, touch ☼ to select the available headlight options. See *Headlight Controls* ⇨ *122*.

Head-Up Display (HUD)

If equipped, touch HUD to select the height and brightness of the head-up display. See *Head-Up Display (HUD)* ⇨ *116*.

Trip Information

Touch TRIP to view distance and efficiency for the current trip. View other trip information by swiping right or left on the touchscreen.

Touch and hold to reset the current trip.

Display Settings

Turn the following options on or off using the infotainment display. Some may not be available for your vehicle. See *Settings* ⇨ *154*.

Speed Sign

Shows sign information from a roadway database in the onboard navigation. The sign will show "– –" when there is no detected speed limit or the system is unavailable.

Turn-by-Turn Graphics

Provides Turn-by-Turn navigation graphics during an active route in your driver display.

Traffic Sign Recognition

Displays the detected speed limit in your driver display.

Speedometer

The speedometer shows the vehicle speed in either kilometers per hour (km/h) or miles per hour (mph).

Odometer

The odometer displays the distance the vehicle has been driven, in either kilometers or miles.

Trip Odometer

The trip odometer displays the distance the vehicle was driven since the trip odometer was last reset.

Access and reset the trip odometer through the control panel near the instrument cluster. See *Instrument Cluster* ⇨ *93*.

Battery Gauge (High Voltage)

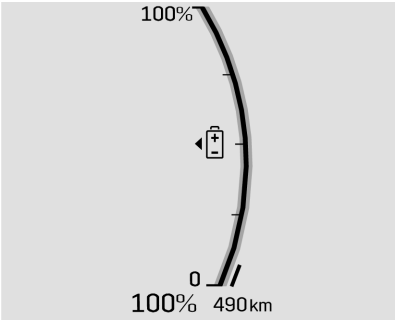

Metric Tour Mode Gauge View Shown, Others Similar

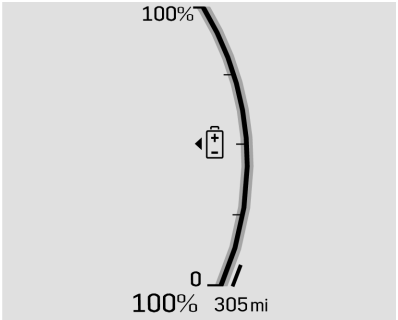

English Tour Mode Gauge View Shown, Others Similar

This gauge displays the high voltage battery state of charge and vehicle range.

The vehicle range is an estimate of the remaining drivable distance. This estimate continuously updates while driving based on factors that could include: the current battery state of charge, recent driving habits, conditions, and HVAC usage.

The gauge fill bars indicate the estimated percentage range from current vehicle conditions, climate settings, and ambient conditions. Estimated range may vary if driving aggressively through hard acceleration

and/or braking events, using excessive HVAC, using heated or cooled seats, battery preconditioning, and engaging different performance modes.

When the high voltage battery state of charge level gets low, the gauge will change color to amber. When the charge is very low, the estimated range value will change to LOW. Additional alerts may display or sound at low state of charge.

Power Indicator Gauge

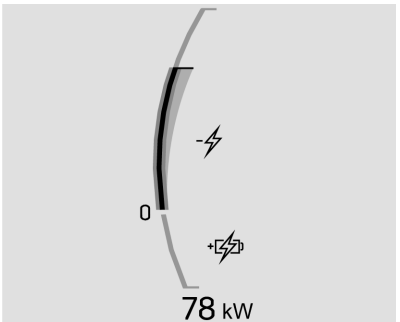

Tour Mode Gauge View Shown, Others Similar

The power indicator gauge is in the center of the display to the left of the speedometer in the Tour mode gauge view.

This gauge displays the instantaneous charge and consumption power of the high voltage battery. Maximum power consumption is available when the high voltage battery is fully charged. Maximum power consumption may be affected by the high voltage battery temperature and ambient conditions. During normal operation, a slight reduction in consumption power may occur as the high voltage battery state of charge decreases.

Regenerative Braking

When regenerative braking is active, the regen battery icon displays and will fill the lower section of the gauge. The power indicator gauge value shows the amount of instantaneous power being regenerated.

Regenerative Power Limited

Regenerative power may be limited when the high voltage battery is near full charge or cold. This limitation will affect the vehicle's maximum regenerative braking power.

Torque Gauge

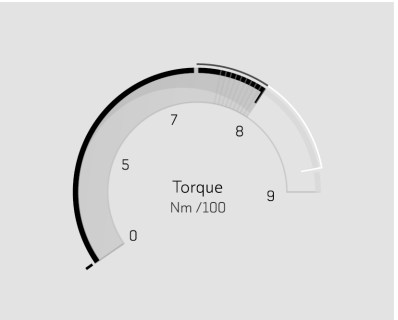

If equipped (V-Series Only), a torque gauge replaces the power indicator gauge when the instrument cluster is in Sport configuration. The torque gauge indicates current motor torque being applied to the wheels. See *Driver Mode Control* ⇨ *192*.

Seat Belt Reminders

Driver Seat Belt Reminder Light

There is a driver seat belt reminder light on the instrument cluster.



When the vehicle is started, or if the driver remains or becomes unbuckled while the vehicle is moving, this light flashes and an audible alert sounds to alert the driver to fasten their seat belt. The light may then display solid until the driver seat belt is buckled. This cycle may continue several times or continuously until the driver seat belt is buckled. If the driver seat belt is buckled, the light will not display and audible alert will not sound.

Front Passenger Seat Belt Reminder Light

This vehicle may have a front passenger seat belt reminder light near the passenger airbag status indicator. See *Passenger Sensing System* ⇨ *58*.



When the vehicle is started, or if the front passenger remains or becomes unbuckled while the vehicle is moving, this light flashes and an audible alert may sound to alert the front passenger to fasten their seat belt. The light may then display solid until the front passenger seat belt is buckled. This cycle may continue several times or continuously until the front passenger seat belt is buckled. If the front passenger seat belt is buckled, the light will not display and the audible alert will not sound.

Alerts may occur if an object, such as a briefcase, handbag, grocery bag, laptop, or other electronic device, is on the front passenger seat. To turn off the reminder light and/or audible alert, remove the object from the seat or buckle the seat belt.

Second Row Passenger Seat Belt Reminder Lights

This vehicle may have second row passenger seat belt reminder lights. The vehicle has one of the following displays.



- A shaded or green light indicates the seat belt is buckled.



- An ✕ indicates the seat belt is not buckled.

  A ✓ indicates the seat belt is buckled.

  For information on the front seat belt reminder lights, see "Driver Seat Belt Reminder Light" and "Front Passenger Seat Belt Reminder Light" listed previously.

When the vehicle is started and not moving, and if a rear passenger has not buckled their seat belt, the light will display solid. If a rear passenger remains or becomes unbuckled while the vehicle is moving, this light may

flash and an audible alert may sound to alert the driver that a rear passenger needs to fasten their seat belt.

Alerts may occur if an object, such as a briefcase, handbag, grocery bag, laptop, or other electronic device, is on the rear passenger seats. To turn off the reminder light and/or audible alert, remove the object from the seat or buckle the seat belt.

Airbag Readiness Light

⚠ Warning

If the airbag readiness light stays on after the vehicle is started or comes on while driving, it means the airbag system might not be working properly. The airbags in the vehicle might not inflate in a crash, or they could even inflate without a crash. To help avoid injury, have the vehicle serviced right away.

This light shows if there is an electrical problem with the airbag system. It is located in the instrument cluster. The system check includes the airbag sensor(s), the passenger sensing system, the pretensioners, the airbag modules, the wiring, and the crash sensing and diagnostic module. For more information on the airbag system, see *Airbag System* ⇨ *53*.



The airbag readiness light comes on for several seconds when the vehicle is started. If the light does not come on then, have it fixed immediately.

If there is a problem with the airbag system, a Driver Information Center (DIC) message may also come on.

Passenger Airbag Status Indicator

⚠ Warning

If the airbag readiness light ever comes on and stays on, it means that something may be wrong with the airbag system. To help avoid injury to yourself or others, have

(Continued)

Warning (Continued)

the vehicle serviced right away. See *Airbag Readiness Light* ⇨ *98* for more information, including important safety information.

The vehicle has a passenger sensing system. See *Passenger Sensing System* ⇨ *58* for important safety information. The overhead console has a passenger airbag status indicator.



The passenger airbag status indicator may include text and/or symbols to indicate the passenger frontal airbag is either On or Off.

When the vehicle is started, the passenger airbag status indicator will light both the On and Off indicators, for several seconds as a system check.

Then, after several more seconds, the passenger airbag status indicator for On or Off will be lit to let you know the status of the front outboard passenger frontal airbag and knee airbag.

If the status indicator for On is lit on the passenger airbag status indicator, it means that the front outboard passenger frontal airbag and knee airbag are allowed to inflate.

If the status indicator for Off is lit on the passenger airbag status indicator, it means that the passenger sensing system has turned off the front outboard passenger frontal airbag and knee airbag.

If, after several seconds, both status indicator lights remain on, or if there are no lights at all, or if the airbag readiness light is on, there may be a problem with the lights or the passenger sensing system. See your dealer for service right away.

Charging System Light (12-Volt Battery)

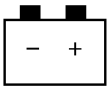

This light displays briefly when you start your vehicle. This is a normal test your vehicle runs on start up.

If the light stays on or displays while driving, there could be a problem with the electrical charging system. Have it checked by your dealer. Driving while this light is on could drain the 12-volt battery.

If you must drive a short distance with the light on, turn off all accessories, such as the radio, to save battery power. Find a safe place to stop the vehicle.

Low State of Charge Light

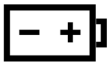

This light displays amber when the vehicle state of charge is low. Proceed to a charging station to charge the vehicle.

Charge Cord Connected Light



This light displays when a charge cord is connected to the vehicle.

Charge Cord Connected and Locked Light



If equipped, this light displays when a charge cord is connected and locked to the vehicle.

Battery Fault Light



This light displays when there is a fault with the high voltage battery. A message may also display in the Driver Information Center. See your dealer for service.

Propulsion Power is Limited Light





These lights display when vehicle propulsion power is limited. The vehicle is drivable, but the ability to accelerate the vehicle may be reduced.

Service Vehicle Soon Light (Propulsion System Failure)



This light displays to indicate there may be an issue with your vehicle. See your dealer for service as soon as possible.

Brake System Warning Light





Metric **English**

⚠ Warning

The brake system might not be working properly if the brake system warning light is on. Driving with the brake system warning light on can lead to a crash. If the light is still on after the vehicle has been pulled off the road and carefully stopped, have the vehicle towed for service.

This light displays briefly when you start your vehicle. This is a normal test your vehicle runs on startup. If it does not display, see your dealer for service.

If the light stays on, have the brake system inspected immediately. This light may display if the brake fluid is low. See *Brake Fluid* ⇨ *289*.

If the light displays while driving, pull off the road and stop carefully. The brake system has electric brake boost. Vehicle speed may be limited when the brake system warning light displays. The brake pedal might be harder to push, or the brake pedal may go closer to the floor. It could take longer to stop. If the light is still on, have the vehicle towed for service. See *Transporting a Disabled Vehicle* ⇨ *328*.

Electric Parking Brake Light



Metric **English**

This light displays when the Electric Parking Brake is applied. If the light flashes after the Electric Parking Brake is released, or while driving, there is a problem with the Electric Parking Brake system. A message may also display in the Driver Information Center.

If the light does not display, or remains flashing, see your dealer.

Service Electric Parking Brake Light



This light may display briefly when you start your vehicle. This is a normal test your vehicle runs on start up. If it does not display, see your dealer for service.

If this light stays on or displays while driving, there is a problem with the electric parking brake. Take the vehicle to a dealer as soon as possible. In addition to the parking brake, other safety functions that use the electric parking brake may also be affected. A message may also display in the Driver Information Center. See *Electric Parking Brake* ⇨ *187*.

Antilock Brake System (ABS) Warning Light



This light displays briefly when you start your vehicle. This is a normal test your vehicle runs on start up. If it does not display, see your dealer for service.

When the Antilock Brake System (ABS) detects a problem, the warning light displays and stays on, and you may hear an audible alert. Your vehicle brakes will still function, but your Antilock Brake System (ABS) is not functioning as expected. See your dealer for service.

If this warning light and the brake system warning light are displayed, your Antilock Brake System (ABS) and your regular brakes are not functioning as expected. See your dealer for service.

See *Brake System Warning Light* ⇨ *100*.

Service All-Wheel Drive Light

eAWD

If equipped, this light displays amber when the electric All-Wheel Drive System is limited, and will turn off when the system is working normally.

If this light displays red, there may be a malfunction. See your dealer.

See *All-Wheel Drive* ⇨ *187*.

Automatic Vehicle Hold (AVH) Light

AUTO HOLD

This light displays when Automatic Vehicle Hold is actively holding the vehicle. See *Automatic Vehicle Hold (AVH)* ⇨ *189*.

Lane Keep Assist (LKA) Light

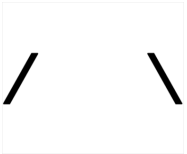

If equipped, the Lane Keep Assist Light may display the following colors:

- Grey: May display when Lane Keep Assist is off.
- White: Displays when Lane Keep Assist is turned on but not controlling the vehicle. It may display when you change lanes intentionally.
- Green: Displays when Lane Keep Assist is turned on and ready to assist. Lane Keep Assist will gently turn the steering wheel if the vehicle approaches a detected lane marking.
- Amber: Displays when Lane Keep Assist is active. The light flashes amber as a Lane Departure Warning alert indicating that a lane marking has been unintentionally crossed. If the system detects you are steering intentionally (to pass or change lanes), the Lane Departure Warning alert may not display. The amber light also displays when the Blind Zone Steering Assist detects a potential crash with a moving vehicle in the lane you are entering. See *Blind Zone Steering Assist (BZSA)* ⇨ *255*. If Lane Keep Assist is malfunctioning or is turned off by the user, the amber light may display and stay on.

Lane Keep Assist will not assist or alert if the turn signal is active in the direction of lane departure, or if Lane Keep Assist detects that you are accelerating, braking, or actively steering. See *Lane Keep Assist (LKA)* ⇨ *258*.

Hands-On Steering Assist Light (Lane Centering Assistance)



If equipped, this light displays the Hands-On Steering Assistance status.



If equipped, this light displays when you need to take immediate action by firmly steering the vehicle.

See *Hands-On Steering Assist (Lane Centering Assistance)* ⇨ *206*.

Automatic Emergency Braking (AEB) Disabled Light



This indicator displays when you turn off Automatic Emergency Braking or Front Pedestrian Braking.

This indicator also displays if Automatic Emergency Braking or Front Pedestrian Braking are unavailable due to malfunction, weather conditions, or a dirty windshield.

See *Automatic Emergency Braking (AEB)* ⇨ *247*.

See *Front Pedestrian Braking (FPB) System* ⇨ *251*.

Vehicle Ahead Indicator



If equipped, this indicator displays green when a vehicle is detected ahead, amber if you are following a vehicle too closely, and grey if no vehicle is detected and the feature is in standby.

See *Forward Collision Alert (FCA) System* ⇨ *245*.

Pedestrian Ahead Indicator



If equipped, this indicator displays amber when a pedestrian is detected in front of the vehicle.

See *Front Pedestrian Braking (FPB) System* ⇨ *251*.

Follow Distance Indicator Light



If equipped, this indicator displays information on the follow distance and, if equipped, Adaptive Cruise Control gap setting:

- White: Display the current gap setting. Three white lines display for far, two white lines display for medium, and one white line displays for near.
- Gray: Displays for inactive lines on the current setting.
- Green: Displays the current follow distance Adaptive Cruise Control is maintaining ahead of the vehicle.

- Blue: Displays when you take control of the vehicle and override the follow distance Adaptive Cruise Control is maintaining.

For more information, see *Forward Collision Alert (FCA) System* ⇨ *245*.

Traction Off Light



This light displays briefly when you start your vehicle. This is a normal test your vehicle runs on start up. If it does not display, see your dealer for service.

The traction off light displays when the Traction Control System has been turned off. When StabiliTrak/Electronic Stability Control is turned off, the Traction Control System is also turned off. To turn the Traction Control System and StabiliTrak/Electronic Stability Control off and on, see *Traction Control/Electronic Stability Control* ⇨ *191*.

If the Traction Control System is off, wheel slip does not limit acceleration unless necessary to help protect the driveline from damage. Adjust your driving accordingly.

Traction Control System (TCS)/ Electronic Stability Control Light



This light displays briefly when you start your vehicle. This is a normal test your vehicle runs on startup. If it does not display, see your dealer for service.

The light flashes when the Traction Control System and/or the StabiliTrak/Electronic Stability Control System is actively working.

If the light is on and not flashing, the Traction Control System and StabiliTrak/Electronic Stability Control System may not be fully operational or able to assist maintaining control. Adjust your driving accordingly. If the condition persists, see your dealer as soon as possible. A message may display in the Driver Information Center.

See *Traction Control/Electronic Stability Control* ⇨ *191*.

Electronic Stability Control (ESC) Off Light



This light displays briefly when you start your vehicle. This is a normal test your vehicle runs on start up. If it does not display, see your dealer for service.

This light displays when the StabiliTrak/ Electronic Stability Control system is turned off. When StabiliTrak/Electronic Stability Control is off, the Traction Control System is also off. To turn StabiliTrak/Electronic Stability Control off and on, see *Traction Control/ Electronic Stability Control* ⇨ *191*.

If StabiliTrak/Electronic Stability Control and the Traction Control System are off, the systems do not assist in controlling the vehicle. Adjust your driving accordingly.

Driver Mode Control Light



This light displays when you select Sport mode.



This light displays when you select Snow/Ice mode.



This light displays when you select My Mode.



This light displays when you select V-Mode.



If equipped, this light displays when you select Velocity Max mode.

See *Driver Mode Control* ⇨ *192*.

Tire Pressure Light



If equipped with the Tire Pressure Monitor System, this light displays briefly when you start your vehicle. This is a normal test your vehicle runs on start up.

The light displays to indicate information about tire pressures and the Tire Pressure Monitor System.

If the Light Stays On

This indicates that one or more of the tires are significantly underinflated.

A Driver Information Center tire pressure message may also display. Stop as soon as possible and inflate the tires to the pressure value shown on the Tire and Loading Information label. See *Tire Pressure* ⇨ *311*.

If the Light Flashes and Then Remains On

If the light flashes for about a minute and then stays on, there may be a problem with the Tire Pressure Monitor System. If the problem is not corrected, the light will display every time the vehicle is started. See *Tire Pressure Monitor Operation* ⇨ *314*.

Security Light



This light displays briefly when you start your vehicle. This is a normal test your vehicle runs on start up. If it does not display, see your dealer for service.

If the light stays on and the vehicle does not start, there could be a problem with the theft-deterrent system. See *Immobilizer Operation* ⇨ *25*.

Vehicle Ready Light



The vehicle ready light displays when the vehicle is ready to be driven.

High-Beam On Light



This light displays when the high-beam headlights are in use. See *High-Beam Systems* ⇨ *123*.

Automatic High-Beam Light



If equipped, this light displays when the IntelliBeam system is enabled. See *High-Beam Systems* ⇨ *123*.

Service Headlight System Indicator



If equipped, this light displays when there is a problem with the Headlight system.

Lights On Reminder



This light displays when the exterior lights are in use. The light will not display when only the Daytime Running Lights are active. See *Headlight Controls* ⇨ *122*.

Cruise Control Light



If equipped, this light displays white when cruise control is on and ready, and turns green when set and active.

The light turns off when cruise control is turned off. See *Adaptive Cruise Control (Advanced)* ⇨ *195*.

Adaptive Cruise Control Light

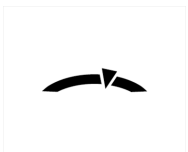

This light displays the Adaptive Cruise Control status.

See *Adaptive Cruise Control (Advanced)* ⇨ *195*.

Curve Speed Control Light



If equipped, this light displays green when Adaptive Cruise Control is actively controlling the vehicle speed and detects a sharp curve on the road ahead.

Adaptive Cruise Control automatically slows the vehicle down while navigating the curve, and may increase speed out of the curve without exceeding the set speed.

Super Cruise Light



If equipped, this light displays the Super Cruise status. See *Super Cruise* ⇨ *217*.

Door Ajar Light



This light displays when a door is open or not securely latched. Before driving, check that all doors are properly closed.

Information Displays

Charging

Important Information about EV Charging

⚠ Danger

Improper use of portable electric vehicle charge cords may cause a fire, electrical shock, or burns, and may result in damage to property, serious injury, or death.

(Continued)

Danger (Continued)

- Do not use extension cords, multi-outlet power strips, splitters, grounding adapters, surge protectors, or similar devices.
- Do not use an electrical outlet that is worn or damaged, or will not hold the plug firmly in place.
- Do not use an electrical outlet that is not properly grounded.
- Do not use an electrical outlet that is on a circuit with other electrical loads.
- Charging an electric vehicle (EV) and increased charging rates can stress a building's electrical system more than a typical household appliance.
- Before plugging the charge cord into an electrical outlet for the first time, have a qualified electrician inspect and verify the electrical system (electrical outlet, wiring, junctions, and protection devices) for heavy-duty service at a 12 amp continuous load.

(Continued)

Danger (Continued)

- Check electrical outlets often, as they may wear out with normal use or become damaged over time, making them unsuitable for EV charging.
- Check the electrical outlet/plug while charging. If the electrical outlet/plug appears hot, discontinue using it immediately and have the electrical outlet serviced by a qualified electrician.
- When charging outdoors, use an electrical outlet that is weatherproof.
- Mount the charging cord to reduce strain on the electrical outlet/plug.
- Do not place the charge cord in a position where there is risk of it being submerged in water.

See the "Charging" section under Driving and Operating for more information.

Charging App

You can review and manage charging preferences in the Charging app.

To launch the Charging app from the infotainment app screen, select the Charging icon. There are five selections to choose from: Next Charge, Charge Assist, Schedule, Energy Transfer, and Settings. When you launch Charging for the first time, the Next Charge screen will display.

Next Charge

To view the current charging status in the infotainment screen, select .

On the Next Charge screen, you can review information for the next charging session and choose Charge Now or Charge Later.

Charge Now

Charge Now is the default charging mode for the vehicle.

The Charge Now screen displays:

Immediate Charging Status: Text indicating the vehicle charges immediately when plugged in and authenticated at a charging location.

Completion Time: Estimated time required to reach the desired charge level.

Target Charge Level Gauge: Percentage where charging stops, along with the estimated range the vehicle can travel after charging is complete.

⚠ Warning

Do not charge your vehicle's battery above an 80% charge if you are going to drive down long, steep grades such as mountain passes. This provides room in the battery for regenerative braking to supplement your conventional brakes during the descent. This is especially important when towing a trailer, which puts additional stress on your vehicle's braking system.

See *Hill and Mountain Roads* ⇨ *175* for important information about driving on grades.

The default charge level is 80% when plugged in to protect battery life. To set a different charge level, drag the circular marker on the Target Charge Level gauge to the preferred value. To lower the desired charge level, drag the Charge Level marker counterclockwise. To raise it, drag the marker clockwise. You can also change charge level by selecting ∧ and ∨ inside the gauge on the screen. The range estimate updates once you set the desired charge level. To optimize battery health, the minimum allowable charge level is determined by the vehicle.

Charge Later

Instead of charging immediately, you can delay charging to complete by your desired departure time. This may be more economical and energy-efficient when charging at home. To use this mode, select Charge Later on the Next Charge screen.

The Charge Later screen allows you to:

Set Desired Completion Time: Choose the desired time for charging to finish. Drag each value up or down within the time selector. If the desired charge level cannot be reached by the selected time, the system displays a message to adjust either the desired charge level or time.

Adjust Target Charge Level: Set the Target Charge Level gauge percentage at which charging stops. This gauge also provides an estimated range the vehicle can travel after charging is complete. To adjust the desired charge level in Charge Later mode, see "Charge Now" earlier in this section.

Preconditioning: Heat or cool the cabin to the desired temperature using energy from the charger, not the vehicle's battery. This option helps maximize battery range after charging. Preconditioning occurs just before departure. Select Preconditioning or go to Settings to adjust the Preconditioning temperature.

Active Charging

For information on vehicle battery and charging, see *Plug-In Charging* ⇨ *261*.

During an active charging session, the Charging screen displays and continuously updates the following items:

- The current charging status
- The range the vehicle can drive at the current charge level
- The range accumulated per hour of charging
- The estimated time to reach the desired charge level
- If equipped, the Charging Rate, showing the current amount of power that is charging the high voltage battery, followed by the maximum amount of power your vehicle is requesting from the charger, represented in kilowatts (kW)

- The Target Charge Level Gauge: Circular gauge that displays the current charge level as a colored section. The charge level is also displayed as a percentage within the gauge.

Drag the marker on the Target Charge Level gauge to change the desired charge level for the active charging session.

If the charge coupler is locked, the Stop Charge button displays. See *AC Charging* ⇨ *262* and *DC Charging* ⇨ *264*. Select the Stop Charge button at any time to end the active charging session.

You can also monitor the charge status

- Using the peek-in charging screen when the vehicle is off. See *Instrument Cluster* ⇨ *93*.
- Remotely, using the myCadillac app on your mobile device.

Charge Cord Limits

If equipped, for Level 1 and Level 2 chargers, you can select the appropriate charge cord limit. This determines how much current flows from the electrical outlet to the vehicle battery and ensures proper charge time estimates.

The Level 2 charge cord limit will be saved and applied to all future Level 2 charges in any location.

A notification displays when you change the charge cord limit to the highest setting on a 120-volt circuit.

If no Home Location is set, the Level 1 cord limit will revert to the lowest setting every time you shift out of P (Park).

Range and charge time estimates fluctuate depending on factors such as charge cord level/limit, battery temperature, and outside temperature.

Fast Charging

If equipped, the vehicle will immediately begin charging when plugged into a fast charge station. While fast charging, the vehicle will bypass any schedule or departure time selection. See *DC Charging* ⇨ *264*.

Charge Assist

The Charge Assist screen helps locate nearby charging stations. To find a charge station, select on the infotainment screen.

The choices available for Charge Assist including Nearby, Favorites, Routes, or Accounts. Select above the list of charge stations to filter it.

Nearby

Displays nearby stations. Select a station to view details, including:

Station Info: The Station Info screen displays:

- Name of the charge station
- Number of ports available
- Estimated charge percentage remaining upon arrival
- Charge station address
- Favorites button
- Navigation button

Connectors: Displays the connector types and availability. Select a connector to see pricing details and charging speed. Select Start Charging to begin a charging session.

Station Photos: Displays photos of the selected charge station.

Favorites

Displays a list of your favorited stations. You can favorite stations on the Station Details screen.

Routes

Displays planned and saved routes on the myCadillac app. To activate a route, select the navigation icon to start route guidance.

Accounts

Displays supported charge provider accounts linked to your myCadillac app and allows you to pre-pay for charging. You can also choose to be notified when you are approaching one of the supported providers' stations on your route.

Schedule

Select  to schedule a custom charging plan for each day of the week. When you plug the vehicle in at the Home Location, the Schedule feature will automatically charge to the desired charge level and precondition the cabin by the time set in the Schedule. This feature acts as a more customizable Charge Later setting than the one on the Next Charge screen.

Creating a Schedule

Select Create Schedule. If there is no Home Location set, you will be prompted to create one.

The Charging Schedule dialog displays:

- Days of the week, represented by toggles containing their first letter
- Value selector for setting the desired charge level
- Time selector for setting the time the vehicle will reach the desired charge level
- Preconditioning: See "Preconditioning" under "Charge Later" earlier in this section.
- ✕ allowing you to close the Charging Schedule screen
- Save & Close: Applies any changes made and exits the dialog

To assign days to the schedule:

1. Select the days you want assigned. Any days not assigned a schedule will begin charging to 80% when plugged in, unless otherwise specified on the Next Charge screen.
2. Select the desired settings.
3. Select Save & Close.

If there are multiple charge schedules, days must be unassigned from their current schedule before they can be assigned to a new one.

To unassign days:

1. On the Home Charge Schedule screen, select the schedule you want to modify.
2. Select the days you want unassigned.
3. Select Save & Close.

To enable or disable all charging schedules, select the toggle switch next to Home Charge Schedule on the Schedule screen.

Modifying and Deleting Charge Schedules

On the schedule screen, select the schedule you want to modify. Make the desired changes and select Save & Close. To delete the schedule, select Delete Schedule and confirm your decision when prompted.

Energy Transfer

Energy Transfer allows you to transfer your vehicle's high voltage power to your home, if equipped, a device, or another vehicle. Select  to set preferences for sharing high voltage battery power through various connections.

The Energy Transfer screen displays:

Persistent Power: Allows you to transfer the high voltage battery power when the vehicle is off. You can set the range reserve to maintain battery power for driving or a timer that will automatically turn off Persistent Power.

Charge Port: Allows you to transfer the high voltage battery power when the vehicle is on.

Charge Settings

Select to view and change the Charge Settings.

The Charge Settings screen displays:

Home Location

Wireless service and GPS satellite technologies must be available and operating Home Location to function properly. These systems may not operate if the battery is disconnected, or if the vehicle has been off for an extended period. If GPS is unavailable, a message displays on the infotainment screen. GPS functionality may resume after the next time you drive the vehicle.

By setting a Home Location, the vehicle can determine when it is plugged in at home, and charges based on existing schedules. You can change or delete the Home Location using this screen.

Charging Status Feedback

This section contains on/off preferences for Charging session notifications.

Beep at Plug-In: When on, the vehicle sounds an audible alert to accompany changes in the charging status.

Alert if Cable Unplugged: If equipped, when the vehicle is on, locked, and connected to a portable cord (120-volt) charger, the horn sounds and the headlights flash if the charge cord becomes unplugged.

Long Beep at Power Loss: When on, the vehicle sounds an audible alert for an extended period if charging power is cut off.

Illuminate Exterior Lights: If equipped, the headlights and taillights display the charging status when the vehicle is on, with more LED bars lighting up as the battery charges. The headlights automatically turn off when charging is complete.

Fast Charge Prep

If equipped, this feature prepares the battery by ensuring it is at the optimal temperature to charge at a Fast Charger.

Depending on outside and battery temperatures, battery conditioning could take longer to reach the optimal temperature.

When using Google Maps, the Fast Charge Prep feature begins automatically when you add a Fast Charge station to your route via on the infotainment screen.

Preconditioning Temperature

Select Precondition Temperature to set the preferred cabin temperature. During a planned charging session at the Home Location, the vehicle cabin is warmed or cooled to this temperature if set to ON in either the Charge Later screen or in an active Schedule.

Preferred Charge Times

Preferred Charge Times let you set charge completion times for the Home Location for weekdays and weekends using the Charge Later or Create Schedule settings, enabling cost-effective, off-peak charging. If the vehicle

does not reach the desired level by the set time, it will continue charging after that time until it reaches the desired charge.

Level 2 Charge Cord Limit

If equipped, allows you to select the amount of current a Level 2 charger delivers to your battery: 16 amps, 24 amps, or Automatic. When Automatic is selected, your battery will charge at the highest amperage the charge station can provide.

Driver Information Center (DIC)

Driver information is displayed in the instrument cluster. It shows the status of many vehicle systems.

Information is broken down into three main zones:

Control Panel: A touchscreen display to left of the instrument cluster.

Left Zone: Displays on the instrument cluster to the left of the speedometer.

Right Zone: Displays on the instrument cluster to the right of the speedometer.

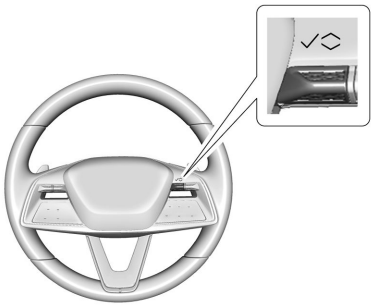

∧ or ∨ : Use to scroll to the previous or next selection.

✓ : Press to open a menu or select a menu item. Press and hold to reset certain displays.

Information Display Options

Select which info display to view by selecting Add to Driver Display in the Vehicle Status on the infotainment display. See *Vehicle Status* ⇨ *114*.

Information Displays

The following is the list of all information displays and their locations. Some information displays may not be available for your vehicle.

Control Panel

Trip Information: The Trip 1 or 2 display shows the current distance traveled, in either kilometers (km) or miles (mi), since the trip odometer was last reset. To reset the trip, touch and hold the touchscreen display when trip odometer is displayed.

The Average Efficiency shows the approximate average kWh per 100 kilometers (kWh/100 km), kilometers per kilowatt hour kWh (km/kWh), or miles per kilowatt hour kWh(mi/kWh). This number is calculated based on the number of kWh/100 km, km/kWh, or mi/kWh recorded since the last time this menu item was reset. This number only reflects the approximate average electrical energy economy that the vehicle has at that moment, and changes as driving conditions change.

Current Trip: If equipped, displays distance driven and average efficiency since vehicle startup. It resets when you turn your vehicle off.

Left Zone

Time/Date: Displays current date and time information. If equipped, Air Quality information is shown below date and time information. Air Quality shows the measured

Particulate Matter (PM2.5), along with the status of the air quality. Higher numbers indicate more pollutants and a greater potential for adverse health effects.

Tire Pressure: Displays the approximate pressures of each tire. Tire pressure displays in either kilopascal (kPa) or in pounds per square inch (psi). If the pressure is low, the value for that tire is shown in amber. See *Tire Pressure Monitor System* ⇨ *313* and *Tire Pressure Monitor Operation* ⇨ *314*.

If equipped, Tire Temperature is located below the tire pressure graphic. Tire Temperature shows overall temperature as either Cold, Cool, Normal, Warm, or Hot. Normal is typical for normal driving while Warm is typical for spirited driving. Unknown displays when tire temperature information is unavailable.

Energy Usage: Displays how the vehicle is using energy since it was last started as percentages of use in different categories.

Energy Efficiency: Displays a graph showing the energy efficiency of the vehicle over a recently driven distance.

Drive Temperatures: Displays temperatures that may be affected by your driving style and can impact torque and power as shown on the Output view.

Output: Displays real-time torque and power output, which can be affected by the conditions shown on the Drive Temperature view.

G-Force: Displays the forces you and your vehicle experience while accelerating, braking, and cornering.

Launch Coach: If equipped, while in Velocity Max mode, displays instructional messages and dynamic gauges reflecting brake and throttle pedal positions. See *Driver Mode Control* ⇨ *192*.

Right Zone

Performance Timer: If equipped, while in Velocity Max mode, displays the current and best times achieved during maximum acceleration.

To reset the best time or dismiss the timer from the screen, highlight the selection on the performance timer menu and press ✓. The current timer resets when you turn your vehicle off. See *Driver Mode Control* ⇨ *192*.

Audio Now Playing: Displays the actively playing audio.

Navigation: Displays a variety of navigation information.

Phone: Displays a variety of call information.

Vehicle Status

To access the menu select the Vehicle Status icon from the infotainment app screen. Vehicle status content is grouped together and shown on the infotainment display.

Follow any messages or alerts that display. Some options may be unavailable while driving.

Select Add to Driver Display to send the desired content to the Driver Information Center. Select Remove from Display to remove the selected content from the Driver Information Center. See *Driver Information Center (DIC)* ⇨ *113*.

Options

The following is the list of vehicle status content and location. Not all content and options may be available for your vehicle.

Overview

Displays an interactive image of your vehicle's performance and health information.

Performance

Drive Temperatures: Displays temperatures that may be affected by your driving style and can impact torque and power as shown on the Output view.

Select Add to Driver Display if desired.

Output: Displays real-time torque and power output, which can be affected by the conditions shown on the Drive Temperature view.

Select Add to Driver Display if desired.

G-Force: Displays the forces you and your vehicle experience while accelerating, braking, and cornering.

Select Add to Driver Display if desired.

Maintenance

Tire Pressure: Displays the approximate pressures of each tire. Tire pressure displays in either kilopascal (kPa) or in pounds per square inch (psi). If the pressure is low, the value for that tire is shown in amber. See *Tire Pressure Monitor System* ⇨ *313* and *Tire Pressure Monitor Operation* ⇨ *314*.

If equipped, Tire Temperature is located below the tire pressure graphic. Tire Temperature displays overall temperature as either Cold, Cool, Normal, Warm, or Hot. Normal is typical for normal driving while Warm is typical for spirited driving. Unknown displays when tire temperature information is unavailable.

Choose from the following options: Relearn Sensors and Add to Driver Display.

Tire Rotation: If equipped, displays the distance since the last tire rotation. Rotating your tires regularly prevents uneven wear. Schedule service when it is convenient. Messages display based on tire rotation notifications. See *Tire Rotation Monitor* ⇨ *318*.

Choose from the following options: Turn Off/On Notifications and Reset.

Energy Info

Energy Usage: Displays how the vehicle is using energy since it was last started. It shows both overall energy use and percentages of use in different categories. Select a category to learn more about how your vehicle uses energy from the battery.

Select Add to Driver Display if desired.

Energy Efficiency: Displays a graph showing the energy efficiency of the vehicle over a recently driven distance. When selected, regenerated range, and instant efficiency are shown along with average efficiency in the dialog.

Select Add to Driver Display if desired.

Maximum Capacity: If equipped, displays the capacity of the high voltage battery compared to when it was new. It is normal for capacity and range to decrease with age. After the high voltage battery system is serviced, CALCULATING may display while capacity is determined.

Updating Maximum Capacity

The LAST UPDATED value updates automatically and may not appear right away. To attempt an update:

1. Drain the battery to LOW range. To do so, try driving the vehicle or running the HVAC system on high. When the battery nears LOW range, go to a charge station. See *Battery Gauge (High Voltage)* ⇨ *95*.
2. Once at LOW, shift into P (Park), turn off and exit the vehicle, removing the remote key.
3. Let the vehicle sit for three hours.

4. Plug in and charge the vehicle to 100%.
5. Once vehicle is complete at 100%, let the vehicle sit for another three hours.
6. Start the vehicle and see if the LAST UPDATED value has reset to 0 kilometers (0 miles).

The above procedure does not guarantee an update to the LAST UPDATED value. An update may not occur if battery conditioning or another event interrupts the rest period, or no changes have occurred since the last update. Frequently performing this action may reduce high voltage battery performance.

Air Quality

Displays the measured interior Particulate Matter (PM2.5), along with the status of the air quality. Higher numbers indicate more pollutants and a greater potential for adverse health effects. When Air Quality Index numbers are high, close your vehicle's windows and doors, set your climate system to Auto, and turn on air recirculation. Air Quality Index displays the possible measurement ranges along with the status that is attributed to those ranges.

Choose from the following options: Air Quality Index and Add to Driver Display.

Head-Up Display (HUD)

⚠ Warning

A Head-Up Display (HUD) image that is too bright or positioned too high in your field of view can reduce your ability to see the road ahead, especially at night. This may increase the risk of a crash. Keep the HUD image dim and positioned low in your field of view.

Caution

If you try to use the HUD image as a parking aid, you may misjudge the distance and damage your vehicle. Do not use the HUD image as a parking aid.

Caution

The Head-Up Display projects information using polarized light. Wearing polarized sunglasses can block this light, making the image invisible, dim, or difficult to read. Do not use polarized sunglasses when using the Head-Up Display feature.

If equipped, the Augmented Reality Head-Up Display (HUD) projects vehicle information onto two areas in front of the driver on the windshield through a lens on the top of the instrument panel. The lower area displays information such as speed and indicator lights. The upper area displays dynamic content such as navigation and alerts centered over the road ahead during certain situations.

You can change the language and the units of measurement to English or metric through the infotainment screen. See "System" under *Settings* ⇨ *154*.

If equipped, the Head-Up Display (HUD) may display the following vehicle information, messages, or alerts:

- Speed
- Incoming Phone Calls

- Navigation
- Driver Assistance Features
- Vehicle Messages

Controls

Select HUD on the touchscreen to the left of the steering wheel to access the controls. See *Instrument Panel Overview* ⇨ *5*. There are two screens to select from. Swipe to alternate. The power on/off button is located next to the brightness controls.

Image

To adjust the Head-Up Display (HUD) image:

1. Adjust the driver seat to your optimal driving position.
2. Start the vehicle.
3. Select HUD on the touchscreen to the left of the steering wheel.
4. Swipe to the controls screen, if needed, and use the rotation and height icons to adjust the image to a position level with the ground that is fully visible and clear.
5. The image will automatically dim and brighten to compensate for outside lighting. Use the brightness icons to adjust as needed.

If the Head-Up Display (HUD) image appears cropped while driving, readjust the image controls and the seat height so that both planes are visible without cropping.

The image can temporarily light up depending on the angle and position of sunlight on the image. This is normal.

The Head-Up Display (HUD) settings are stored and recalled with memory seats, if equipped. See *Memory Seats* ⇨ *38*.

Views

You can select different views on the Head-Up Display (HUD) using the controls. All views display information in the lower area. Some views only show dynamic information in the upper area during certain situations. Some vehicle information and vehicle messages or alerts are available in all views. Critical alerts may display in the Head-Up Display (HUD) even when it is turned off.

All Views: Display the speedometer, posted speed limit, and some indicators in the lower area. See *Symbols* ⇨ *3*. Incoming phone call information, if connected via Bluetooth, and some alerts will also display temporarily in the lower area of the Head-Up Display (HUD).

Standard View: Displays Turn-by-Turn Navigation instructions during an active route using on-board navigation. If no route is set, the upper area will not display any information.

Augmented Reality View: Displays augmented reality graphics that correspond to the real world in certain situations in the upper area, including:

- Imminent Collision Alert triangle
- Driver Assistance features, including Lane Change status, if equipped with Super Cruise, and Gap Adjustment
- Navigation 3D graphics, during an active route

Augmented Reality View also displays Turn-by-Turn Navigation instructions in the lower area during an active route.

The Augmented Reality features are prioritized. Some features may not display when others are active.

Assist View: Displays driver assistance graphics to show system status when features are active and Turn-by-Turn Navigation instructions during an active route using on-board navigation in the upper area.

Options

To turn the posted speed sign in the Head-Up Display (HUD) on or off, on the infotainment app screen, select *Settings* ⇨ *154* > Display > Driver Display.

To turn the Turn-by-Turn Navigation content in the Head-Up Display (HUD) on or off, on the infotainment app screen, select *Settings* ⇨ *154* > Display > Head-Up Display.

Troubleshooting

To ensure optimal visibility of the Head-Up Display (HUD) image, make sure that:

- The windshield is clean. See *Interior Care* ⇨ *334*. The windshield is part of the Head-Up Display (HUD) system. See *Windshield Replacement* ⇨ *294*.
- The lens is clean and clear of any obstructions. See *Interior Care* ⇨ *334*.
- The brightness setting is appropriately adjusted.
- The Head-Up Display (HUD) is adjusted to the proper height and rotation.

If you continue to experience problems, contact your dealer.

Vehicle Messages

Messages displayed on the Driver Information Center indicate the vehicle status or needed action to correct a condition. Multiple messages may appear together.

If equipped, vehicle status notifications are also sent to the infotainment display. Touch 🔔 on the infotainment app screen to display vehicle messages. A red dot on the notification icon indicates an active issue. Depending on the message, you can schedule service, find the nearest dealer, or find the nearest charging station.

Press ✓ to acknowledge and clear the messages that do not require immediate action. You cannot clear messages that require immediate action until that action is performed.

Address and follow all message instructions promptly; clearing a message does not correct the issue.

If a SERVICE message appears, see your dealer.

The system may display messages concerning:

- Service Messages
- Fluid Levels
- Vehicle Security
- Brakes
- Ride Control Systems
- Advanced Driver Assistance Systems
- Cruise Control
- Lighting and Bulb Replacement
- Wiper/Washer Systems
- Doors and Windows
- Seat Belts
- Airbag Systems
- Propulsion
- Tire Pressure
- Battery
- Steering

Propulsion Power Messages

REDUCED ACCELERATION DRIVE WITH CARE

This message indicates reduced propulsion power, which will affect maximum acceleration. Drive with caution. Try restarting after the vehicle has been off for two minutes. If acceleration decreases significantly, propulsion may be disabled while the vehicle is in motion.

If this message stays on or appears repeatedly, take the vehicle to your dealer for service as soon as possible.

This message may also display when the high voltage battery charge level is low. This is normal and a result of reduced battery capability.

VEHICLE POWER REDUCED DUE TO TEMPERATURE

This message indicates low battery temperature has reduced vehicle acceleration and performance.

As the vehicle is driven, the battery will warm and restore propulsion to normal operation. If the battery state of charge is too low, propulsion will not return to normal even if the vehicle warms up. See *Plug-In Charging* ⇨ *261* for recommended charge levels.

Always keep the vehicle plugged in to maintain the high voltage battery temperature for the next drive, especially in extremely cold weather.

Vehicle Speed Messages

SPEED LIMITED TO XXX KM/H (MPH)

This message indicates that the vehicle has limited its speed to protect vehicle systems, such as lubrication, thermal, brakes, suspension, tires, or Teen Driver, if equipped.

Universal Remote System

Universal Remote System Programming (Garage Door Opener)

The Universal Remote System can replace up to eight remote control transmitters (remote controls), such as garage door openers, security systems, and home automation devices. These instructions address garage door openers, but will work for other devices, too.

Do not use the Universal Remote System with any garage door opener that does not have the stop and reverse feature. This includes any garage door opener model manufactured before April 1, 1982.

Keep the original hand-held transmitter for use in other vehicles and future programming and erase the system if you terminate vehicle ownership. See "Erasing Universal Remotes" later in this section.

Programming the Universal Remote System

Programming involves time-sensitive steps. You must complete these steps within the allotted time, or you will have to repeat programming.

Read these instructions completely before programming the Universal Remote System. It may help to have another person assist with the programming process.

1. If your garage door opener includes a hand-held transmitter, make sure it has a new battery for quick and accurate transmission of the radio-frequency signal.
2. Clear all people and objects away from the garage door.

3. Park your vehicle outside and directly facing the garage door opener receiver. The vehicle must remain in P (Park) for the entire duration of the programming.
4. From the Controls menu, select Universal Remotes > Add Remote.

   Depending on the vehicle, access the Controls menu from either the infotainment apps screen or the front center console.
5. If you have a hand-held transmitter, make sure to press Yes to continue to the next step.

   If your garage door opener does not include a hand-held transmitter, press either D-Mode (mostly used in North America), or UR-Mode (mostly used in Europe, Mideast, and Asia), and jump to "D-Mode and UR-Mode Based Programming" later in this section.

Hand-Held Transmitter Based Programming

Once you press Yes for the hand-held transmitter, you should see a screen with Searching for Signal.

6. While Searching for Signal is displayed, press and hold the hand-held transmitter button about 3 to 8 cm (1 to 3 in) away from the rear-view mirror. Do not release the button until Signal Found displays.

   If Signal Found does not display after 45 seconds, press < and return to Step 4 to try again.

   Some garage door openers require a modification to Step 6. See "Radio Signals for Some Gate Operators" later in this section.
7. Once Signal Found displays, press the Test button on the screen. You may need to press it several times, as some garage door openers require multiple valid signals when programming.
8. If your garage door moves, press the It Worked button to confirm programming was successful and end the process.

   If programming was not successful, you can return to Step 4 and try again or follow additional steps described in "D-Mode and UR-Mode Based Programming" later in this section. You can also consult with HomeLink by jumping to "Contact HomeLink" later in this section.

D-Mode and UR-Mode Based Programming

If supported, you may be able to program D or UR mode garage door receiver remotes.

9. Locate the Learn or Smart button on the garage door opener receiver in the garage. The name and color may vary by manufacturer but is usually located near the antenna wire. If you have any difficulty finding the button, refer to the garage door opener manufacturer's instructions.
10. Press and release the Learn or Smart button on the garage door opener receiver, then complete the next step within 30 seconds of pressing the button. If it takes longer than 30 seconds, press the button again.
11. Return to the vehicle and press the Test button on the screen. You may need to press the Test button several times. If your garage door moves, then programming was successful. Press the It Worked button to confirm programming was successful and end the process.

If programming was not successful, you may retry steps above by pressing the It Didn't Work button or consult with HomeLink by jumping to "Contact HomeLink" later in this section.

Contact HomeLink

For questions or programming help, visit www.homelink.com/gm or call 1–800–355–3515. International rates apply for calls placed outside the U.S., Canada, or Puerto Rico, and may differ based on landline or mobile phone.

Using Universal Remotes

After successfully programming your Universal Remote, you can change the name and location of the remote as desired by selecting next to the remote on the screen. Be sure that you are nearby your programmed garage door opener when you select Update Location.

Each successfully programmed remote creates a shortcut icon. Tap the desired shortcut icon to operate the remote. You can press and drag icons to reposition them on the screen as desired.

Erasing Universal Remotes

To erase an individual programmed Universal Remote, select next to the remote on the screen you wish to erase. Then select Delete.

To erase ALL programmed Universal Remotes, select next to any remote on the screen. Then select Delete All.

Radio Signals for Some Gate Operators

Some gate operators and radio-frequency laws require transmitter signals to time out after several seconds of transmission.

This may not be long enough for the Universal Remote system to pick up the signal during programming. If programming did not work, replace Step 6 under "Programming the Universal Remote System," previously in the section, with the following:

Press and release the hand-held transmitter button every two seconds until Signal Found appears on the screen. Continue to Step 7 to complete programming.

Universal Remote System Operation (Garage Door Opener)

Using the Universal Remote System

Press the desired Universal Remote button on the infotainment apps screen or the front center console, depending on the vehicle.

Reprogramming a Single Universal Remote System Button

To reprogram any of the system buttons:

1. Select the universal remote to be reprogrammed.
2. Select "Delete."
3. Select "Add Remote." Follow the instructions in *Universal Remote System Programming (Garage Door Opener)* ⇨ *119*.

Lighting

Exterior Lighting
Headlight Controls 122
High-Beam Systems 123
Headlights Off Reminder 124
Daytime Running Lights 124
Automatic Headlight System 124
Headlight Leveling Control 125
Hazard Warning Flashers 125
Turn and Lane-Change Signals 126
Cornering Lights 126

Interior Lighting
Instrument Panel Illumination Control 126
Dome Lights 127
Reading Lights 127

Lighting Features
Entry Lighting 128
Exit Lighting 128
Ambient Lighting 128
Battery Load Management 129
Battery Power Protection 129
Exterior Lighting Battery Saver 130

Exterior Lighting

Headlight Controls

The headlight control is in the control panel area of the instrument cluster. See *Instrument Cluster* ⇨ *93*. Touch the Headlights symbol, then select any of the following options.

Off : Turns off the exterior lights and deactivates the AUTO mode.

For vehicles first sold in Canada: When not in P (Park), either the Daytime Running Lights or headlights must always be on, due to Canadian safety regulations. Regardless of the headlight control setting, when you shift out of P (Park), the Automatic Headlight System will activate and turn on either the Daytime Running Lights or headlights.

Auto: Enables the Automatic Headlight System, which controls the exterior lights and instrument panel lights depending on outside lighting. See *Automatic Headlight System* ⇨ *124*.

: Turns on the exterior lights, such as parking lights, taillights, and license plate lights.

For vehicles first sold in Canada: When not in P (Park), either the Daytime Running Lights or headlights must always be on, due to Canadian safety regulations. Regardless of the headlight control setting, when you shift out of P (Park), the Automatic Headlight System will activate and turn on either the Daytime Running Lights or headlights.

: Turns on the headlights, instrument panel lights, and all the lights listed in .

To activate the headlights on the infotainment app screen, select > See More Controls > Lights > Headlights.

Lights On in Canada

For vehicles first sold in Canada: When not in P (Park), either the Daytime Running Lights or headlights must always be on, due to Canadian safety regulations. Regardless of the headlight control setting, when you shift out of P (Park), the Automatic Headlight System will activate and turn on either the Daytime Running Lights or headlights.

Optional Reminder If Headlights Are Off

To set a reminder for the vehicle to display a message if it is dark outside and the headlights are off:

1. On infotainment screen, select > See More Controls > Lights > Headlights.
2. Select > in the upper corner of the Headlights menu.
3. Select the box next to Turn Headlight Reminder On to enable or disable the option.

High-Beam Systems

Manual High-Beam Controls

High/Low-Beam Changer

To manually turn the high beams on, push the turn signal lever away from you. To return to low beams, push the lever again or pull it toward you and release.

The high-beam indicator light appears in the instrument cluster when the high-beam headlights are on.

Flash-to-Pass

To flash the high beams, pull the turn signal lever toward you and release.

Automatic High-Beam System — IntelliBeam

If equipped, this system turns the high-beam headlights on and off automatically when it is dark enough and no other traffic is present.

There is a sensor near the top center of the windshield that automatically detects the lights of oncoming and preceding vehicles. Keep this area of the windshield clear of obstructions for best system performance.

Turning IntelliBeam On and Off

To enable IntelliBeam:

1. Set the Headlights control to Auto or . See *Headlight Controls* ⇨ *122*
2. From the infotainment app screen, select Controls > Auto High Beams > On or > See More Controls > Lights > Auto High Beams > On.

The IntelliBeam light AUTO appears in the instrument cluster when the Adaptive Headlight System is enabled.

You can disable the system from the infotainment app screen by selecting > Auto High Beams > Off.

To disable the system when high beams are on, turn on the manual high beams using either the high/low-beam changer or flash-to-pass.

Driving with IntelliBeam

⚠ Warning

Using high beams in dense exhaust, smoke, fog, snow, road spray, mist, or other airborne obstructions can cause a glare, obstructing your vision. This reduction in visibility can result in a crash. Never use high beams in dense exhaust, smoke, fog, snow, road spray, mist, or other airborne obstructions.

The system only activates the high beams when driving over 40 km/h (24 mph).

The blue High-Beam On light AUTO appears on the instrument cluster when the high beams are on.

The high-beam headlights remain on, under automatic control, until one of the following situations occurs:

- The vehicle speed drops below 20 km/h (12 mph).

- The outside light is bright enough that high-beam headlights are not required.
- The system detects an approaching vehicle's headlights.
- The system detects a preceding vehicle's taillights.
- You manually disable IntelliBeam.
- You set the headlight control to Off or Parking .

The high-beam headlights may not turn off automatically and must be manually disabled if the system cannot detect another vehicle's lights because of any of the following conditions:

- The other vehicle's lights are missing, damaged, or otherwise undetected.
- The other vehicle's lights are covered or obstructed from view by dense exhaust, smoke, fog, snow, road spray, dirt, mist, or other obstructions.
- The windshield is dirty, cracked, or the light sensor is obstructed.
- A heavy vehicle load raises the front end such that the sensor aim is too high to detect lights.
- You are driving on winding or hilly roads.

Headlights Off Reminder

An audible alert sounds upon opening the driver door if the vehicle is off and the headlights or parking lights are still on. To disable the audible alert, turn off the lights.

Daytime Running Lights

Daytime Running Lights make it easier for others to see the front of your vehicle during the day.

The Automatic Headlight System turns the Daytime Running Lights on and off.

When Daytime Running Lights Turn On

The Daytime Running Lights turn on when all the following conditions are met:

- The vehicle is on
- The headlight control is set to Auto
- The light sensor determines it is daytime

The instrument panel lights, taillights, and other exterior lights do not turn on when the Daytime Running Lights are on.

For vehicles first sold in Canada: When not in P (Park), either the Daytime Running Lights or headlights are always on, regardless of the headlight control setting, due to Canadian safety regulations.

When Daytime Running Lights Turn Off

When it begins to get dark, the automatic headlight system turns off the Daytime Running Lights and turns on the headlights.

The Daytime Running Lights turn off when you either turn on the headlights or turn off the vehicle.

For vehicles first sold in Canada, the Daytime Running Lights turn off only when the vehicle is shifted to P (Park) and the headlight control is set to off or .

Automatic Headlight System

The Automatic Headlight System controls the headlights, other exterior lights, and instrument panel lights depending on the outside light level.

To enable the system, set the headlight control to Auto.

- If it is dark enough outside, the system turns on the interior instrument panel lights and the exterior lights, such as headlights, taillights, parking lights, and license plate lights.
- If it is bright enough outside, the system turns off the exterior lights and instrument panel lights and may turn on the Daytime Running Lights.

To turn off the Automatic Headlight System, either turn the headlight control or the vehicle off.

Low Light Conditions During Daylight Hours

When driving through a parking garage, tunnel, or heavy overcast weather, the automatic headlight system may sense a low light level and turn on the headlights. This is normal.

If you start the vehicle in a dark garage, the headlights turn on immediately. If it is light outside when the vehicle leaves the garage, there is a slight delay before the Automatic Headlight System switches over to Daytime Running Lights. During that delay, the instrument cluster may not be as bright as usual. Make sure the instrument panel brightness control is in the full bright position. See *Instrument Panel Illumination Control* ⇨ *126*.

Location of Light Sensor

A light sensor on top of the instrument panel measures the outside light level. See *Instrument Panel Overview* ⇨ *5*.

Do not cover the sensor, otherwise the exterior lights will turn on when not needed.

Lights On with Wipers

If you activate the windshield wipers in the daylight with the vehicle on and the headlight control set to Auto, the headlights, parking lights, and other exterior lights turn on. The transition time for the lights turning on varies based on wiper speed. When the wipers are not operating, these lights turn off.

Set the headlight control to off or Parking to disable this feature.

Headlight Leveling Control

Automatic Headlight Leveling Control

If equipped, headlight leveling automatically adjusts based on the vehicle load to reduce glare for other drivers.

Dynamic Automatic Headlight Leveling Control

If equipped, headlight leveling automatically adjusts based on vehicle's angle, which is determined by the road and vehicle conditions.

Hazard Warning Flashers



Hazard warning flashers help alert others that you are having trouble. Press ⚠ button on the overhead console to turn the front and rear turn signal flashers on. Press again to turn them off.

When the hazard warning flashers are on, the turn signal lights do not respond to the turn signal lever.

The hazard warning flashers turn on automatically if the airbags deploy.

Turn and Lane-Change Signals

Raise or lower the turn signal lever until the arrow on the instrument cluster starts to flash in the corresponding direction. See *Instrument Panel Overview* ⇨ *5*.

Changing Lanes: Hold the lever in place until you complete the lane change. Let go of the lever and it returns to its starting position.

If you raise or lower the lever quickly then release it, the turn signal flashes three times.

If you change lanes without using the turn signal, the Lane Keep Assist system, if equipped, may respond. See *Lane Keep Assist (LKA)* ⇨ *258*.

Turning Corners: Move the lever all the way up or down so that it stays in place when you let go. When you complete the turn, bringing the steering wheel back to center will automatically turn off the turn signal.

If the steering wheel did not turn far enough, the turn signal will remain flashing until you move the lever back to its starting position.

Turn Signal On Alert

If you leave the turn signal on for more than 1.2 km (0.75 mi), an audible alert sounds at each flash of the turn signal. The message TURN SIGNAL ON also appears in the Driver Information Center. To turn off both the audible alert and message, move the turn signal lever back to its starting position.

Turn Signal Not Working Normally

If the indicator arrow flashes rapidly when using the turn signal, an exterior LED may have burned out. See your dealer for service.

If the exterior LED is not burned out, check the fuse. See *Instrument Panel Fuse Block* ⇨ *302*.

Cornering Lights

If equipped, cornering lights automatically turn on when all the following conditions occur:

- The low-beam headlights are on.
- You activate the turn signals or turn the steering wheel to turn a corner.
- The vehicle speed is below 40 km/h (25 mph).

Interior Lighting

Instrument Panel Illumination Control



This feature adjusts the brightness of all illuminated controls.

: Move the thumbwheel up or down to brighten or dim the lights.

The brightness adjustment is functional at night, or when the headlights or parking lights are on.

During the day, the display brightness adjusts automatically based on outdoor lighting.

Stealth Mode

Stealth mode is only available at night. To enable stealth mode, turn the thumbwheel to the off position.

In stealth mode, most graphics are not visible on the instrument cluster. Coolant temperature, energy usage, digital speed, and any active telltales or alerts remain visible.

Dome Lights

Dome lights provide overhead interior lighting and lighting in the rear cargo compartment. They may turn on automatically as part of entry lighting and exit lighting.

To turn the dome lights on or off manually, from the app screen on the infotainment display, select > .

Auto Mode

You can set an option for the dome lights to turn on automatically or to stay off when you open any door.

Select > See More Controls > Lights.

Touch > in the upper corner of the Dome Light menu.

Touch the Auto box to enable or disable this option.

Reading Lights

Reading lights are in the overhead console and over the rear seats. To turn a reading light on or off, press the light lens.

The reading lights are also dome lights and may turn on with entry and exit lighting. See *Dome Lights* ⇨ *127*.

Front Reading Lights



The front reading lights are in the overhead console.

Rear Reading Lights

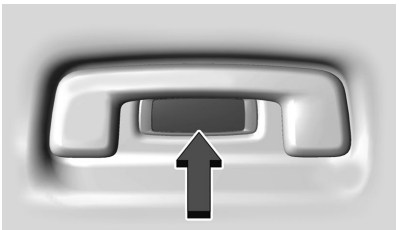

The reading lights are above the passenger doors.

Lighting Features

Entry Lighting

The entry lighting feature automatically turns on various interior and exterior lights for increased visibility in and around a vehicle.

Interior: The interior lights will turn on when you open any doors or press on the remote key provided you have enabled the Auto option. See *Dome Lights* ⇨ *127*.

Exterior: Some exterior lights will turn on when you press on the remote key.

Low-beam headlights will only turn on briefly at night, or in areas with limited lighting.

All interior and exterior lights turn off when you press on the remote key or start the vehicle. If you take no action, eventually they will turn off automatically.

To change this feature, from the app screen on the infotainment display, select Settings > Vehicle > Lighting.

Approach Detection

If equipped, entry lighting activates when the vehicle detects the remote key within approximately 2 m (6 ft).

If you do not use the remote key or keyless access for an extended period while the vehicle is parked, approach detection deactivates. To reactivate approach detection, press any button on the remote key or open and close all doors.

Exit Lighting

After the vehicle is off and the driver door opens, some exterior and interior lights turn on.

The exterior and interior lights remain on for a set amount of time, then automatically turn off.

The exterior lights turn off immediately when the headlight control is set to Off.

From the app screen on the infotainment display, select Settings > Vehicle > Lighting to change this feature.

Ambient Lighting

If equipped, the ambient lighting feature allows you to customize the color and brightness of the lights throughout the passenger cabin.

From the app screen on the infotainment display, select Ambient Lighting.

To disable or enable the ambient lighting, slide the on-screen toggle to the desired position.

Overview

Current Lighting: Select the preset style name to apply it to all cabin ambient lighting.

Customize

Tap a dot to select which ambient lighting zone to change, then select a color family on the color bar. You can then select a specific color from that color family. Select the desired color swatch to apply that color, then select Confirm to keep the selection.

- Select Sync to apply the same selection to all zones at once.
- Select Undo to revert to the previous selection.

To save your set of selections, select Save to Styles. Your custom style appears on the Overview, Styles, and Modes screen.

Brightness

To customize the brightness of each ambient lighting zone, tap the or icons or drag your finger across the slider bar to increase or decrease brightness.

Sync Brightness: Select this option to apply the same brightness level to all ambient lighting.

Styles

Styles are a series of preset color combinations. Swipe the row of tiles to display more choices. Select a box to change all ambient lighting to that style.

Modes

Link to Drive Mode: If equipped, select this option to pair ambient lighting with drive modes. When you select a drive mode, the ambient lighting changes to a preset color assigned to that mode. This option overrides your selected color on the color palette.

Custom: Select this option to customize each zone separately.

Demo Mode: If equipped, select this option to automatically cycle through the available colors. Demo Mode is only available when the vehicle is in P (Park).

Battery Load Management

Electric Power Management estimates the battery temperature and state of charge, then adjusts the voltage for best performance and extended battery life. It also prevents excessive discharge of the battery by balancing the generator's output and the vehicle's electrical needs.

Battery State of Charge and Performance

When the battery state of charge is low, the voltage increases slightly to quickly restore the charge. When the state of charge is high, the voltage decreases slightly to prevent overcharging. As this adjustment occurs, you may see the voltage move up or down on the voltmeter gauge or voltage display, if equipped, on the instrument cluster. This is normal. If there is a problem, the system displays an alert. See *Instrument Cluster* ⇨ *93*.

Electrical Load Management

A high electrical load can occur when multiple components such as headlights, high beams, rear window defogger, climate control fan on high, heated seats, engine cooling fans, or trailering lights/equipment are in use. Plugging phone chargers, laptops, and other devices into accessory power outlets can also contribute to electrical load.

High electrical loads can discharge the battery at idle because the generator (alternator) may not spin fast enough to produce all the needed power. Electrical Power Management may increase the idle speed or temporarily reduce accessory power to regulate this issue. You may also see a Driver Information Center message. See *Driver Information Center (DIC)* ⇨ *113*.

Normally, you will not notice when Electric Power Management is working to correct issues. In rare cases, if you notice the system making adjustments or see a Driver Information Center message, reduce electrical loads as much as possible.

Battery Power Protection

This feature helps prevent the battery from being drained if you leave the interior dome lights or reading lights on. These lights automatically turn off 10 minutes after you turn the vehicle off. The lights will not turn back on again until one of the following actions occurs:

- You start the vehicle.
- You close the doors, then re-open them.

Exterior Lighting Battery Saver

If you leave the parking lights or headlights on manually, they turn off about 10 minutes after you turn the vehicle off. This protects against draining the battery.

To restart the 10-minute timer, set the headlight control to ⏻ and then select ≡00≡ or ≡D.

To keep the parking lights or headlights on for more than 10 minutes, start the vehicle.

Infotainment System

Introduction
Introduction 131
Overview 132
Steering Wheel Controls 133
Using the System 133

Radio
AM-FM Radio 135
Satellite Radio 136
Radio Reception 137
Multi-Band Antenna 137

Audio Players
Avoiding Untrusted Media Devices 137
USB Port 137
Bluetooth Audio 138

Navigation
Using the Navigation System 138
Maps 139
Navigation Symbols 139
Destination 140
Global Positioning System (GPS) 141
Vehicle Positioning 141
Problems with Route Guidance 142

Voice Recognition
Voice Recognition 142

Phone
Bluetooth (Overview) 144
Bluetooth (Pairing and Using a Phone) ... 144
Bluetooth (Pairing and Using a Phone Equipped with Active Pairing) 149
Apple CarPlay and Android Auto 153

Settings
Settings 154
Teen Driver 156

Trademarks and License Agreements
Trademarks and License Agreements 159

Introduction

Read the following pages to become familiar with the features.

⚠ Warning

Taking your eyes off the road for too long or too often while using any infotainment feature can cause a crash. You or others could be injured or killed. Do not give extended attention to infotainment tasks while driving. Limit your glances at the vehicle displays and focus your attention on driving. Use voice commands whenever possible.

The infotainment system has built-in features intended to help avoid distraction by disabling some features when driving. These features may become disabled when they are unavailable. Many infotainment features are also available through the instrument cluster and steering wheel controls.

Before driving:

- Become familiar with the operation, center stack controls, steering wheel controls, and infotainment display.

- Set up the audio by presetting favorite stations, setting the tone, and adjusting the speakers.
- Set up phone numbers in advance so they can be called easily by pressing a single control or by using a single voice command.

See *Distracted Driving* ⇨ *171*.

Overview

Infotainment System

The infotainment system is controlled by using the infotainment display, Multi-Function Controller on the center console, steering wheel controls, and voice recognition, if available.

Infotainment Controls on the Multi-Function Controller

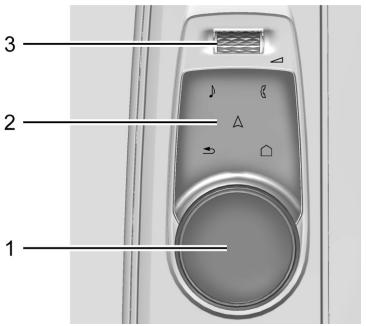

1. Primary Knob : Turn to highlight a feature. Press to activate the highlighted feature.

Move right/left or up/down to change the highlighted area on the display screen.

For cleaning and care see *Interior Care* ⇨ *334*.

2. Selection Area:

: Press to open the audio app page.

: Press to access the phone menu.

: Press to access the navigation screen (if equipped).

: Press to return to the previous display in a menu.

: Press to access the Infotainment Home Screen.

3. : Press to turn the infotainment system on.

Press and hold when the infotainment system is on to turn the system off.

Press to mute/unmute the infotainment system when the system is on.

Scroll up or down to increase or decrease the volume.

Infotainment App Screen

If equipped, touch to access the infotainment app screen. The app screen is where vehicle application icons are accessed. Some applications are disabled when the vehicle is moving.

Swipe left or right across the display or use the Multi-Function Controller to move the page. Move the knob right/left to change the page.

Managing Infotainment App Screen Icons

1. Touch and hold any of the app screen icons to enter edit mode. Edit mode is not available when the vehicle is moving.
2. Continue holding the icon and drag it to the desired position.
3. Release your finger to drop the icon in the desired position.
4. To move an application to another page, drag the icon to the edge of the display toward the desired page.
5. Continue dragging and dropping application icons as desired.

There will always be 10 icons per page except on the last page. If an icon is moved from the first page to the second, then that icon from the second page will replace the one removed from the first.

Steering Wheel Controls

If equipped, some audio controls can be adjusted at the steering wheel.

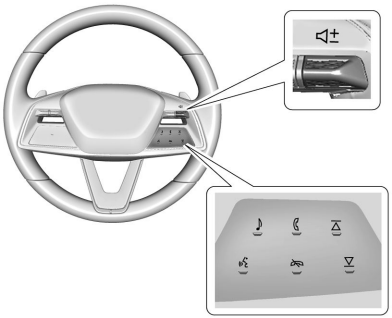

+ or −: Toggle up or down to increase or decrease the volume.

: Press show the audio sources list.

: Press to answer an incoming phone call or show the recent phone call list when not in a call.

or : Press to go to the next or previous favorite when listening to the radio. Press to go to the next or previous track when listening to a media source.

: Press to reject an incoming phone call, end an active phone call, end a voice recognition session, or mute the audio when there is no phone call.

: Press initiate voice assistant.

Using the System

Audio

Touch the Audio icon on the infotainment display or on the Multi-Function Controller to display the active audio source page. Examples of available sources may include AM, FM, SiriusXM (if equipped), USB, and Bluetooth.

Phone

Touch the Phone icon on the infotainment display or on the Multi-Function Controller to display the Phone menu. See *Bluetooth (Pairing and Using a Phone)* ⇨ *144 Bluetooth (Overview)* ⇨ *144 Bluetooth (Pairing and Using a Phone Equipped with Active Pairing)* ⇨ *149*.

Maps

Touch the Maps icon to display the Google Maps screen. See *Using the Navigation System* ⇨ *138*.

Google Assistant

Touch the Google Assistant icon to open the Google Assistant app. See *Voice Recognition* ⇨ *142*.

Google Play

Touch to download some of your favorite apps in your vehicle. Downloading apps on Google Play require you to sign into a Google Account with an active service plan with data. Some third-party apps require a separate account and, in some cases, a paid subscription for in-vehicle access.

Apple CarPlay

If equipped, touch the Apple CarPlay icon to activate Apple CarPlay after a supported device is connected. See *Apple CarPlay and Android Auto* ⇨ *153*.

Android Auto

If equipped, touch the Android Auto icon to activate Android Auto after a supported device is connected. See *Apple CarPlay and Android Auto* ⇨ *153*.

Settings

Touch the Settings icon to display the Settings menu. See *Settings* ⇨ *154*.

Controls

Touch the Controls icon to display the Controls menu.

Application Tray

The Application Tray is along the bottom of the display. It shows up to six applications.

Infotainment Gestures

Use the following finger gestures to control the infotainment system.

Touch/Tap

Touch/tap is used to select an icon or option, activate an application, or change the location inside a map.

Touch and Hold

Touch and hold can be used to move or delete an application.

Drag

Drag is used to move applications on the infotainment app screen, or to pan the map. To drag the item, it must be held and moved along the display to the new location. This can be done up, down, right, or left. This feature is only available when vehicle is parked and not in motion.

Nudge

Nudge is used to move items a short distance on a list or a map. To nudge, hold and move the selected item up or down to a new location.

Fling or Swipe

Fling or swipe is used to scroll through a list, pan the map, or change page views. Do this by placing a finger on the display then moving it rapidly up and down or right and left.

Spread

Spread is used to zoom in on a map, certain images, or a web page. Place finger and thumb together on the display, then move them apart.

Pinch

Pinch is used to zoom out on a map, certain images, or a web page. Place finger and thumb apart on the display, then move them together.

Cleaning High Gloss Surfaces, Vehicle Information, and Radio Displays

See *Interior Care* ⇨ *334*.

Radio

AM-FM Radio

Playing the Radio

From the infotainment app screen, touch the Audio icon to display the active audio source page. Touch the source icon from the top of the page to choose from AM, FM, SiriusXM, or Bluetooth.

Finding a Station

Seeking a Station

From the AM or FM screen, touch the back or forward icons on the infotainment display to search for the previous or next strong station.

Tune

Touch on the infotainment display to display the Tune screen. Enter a station using the keypad.

The keypad will gray out entries that do not contribute to a valid frequency and will automatically place a decimal point within the frequency number.

Touch to delete one number at a time.

Touch and hold to delete all numbers.

A valid AM or FM station will automatically tune to the new frequency and display the now playing screen.

The list of all available stations are on the right side of the Tune display to browse. Touch to go to that station or touch to save the station as a favorite.

Storing Radio Station Favorites

Favorites show in the area on the left of the display.

AM, FM, or SiriusXM : To store favorites, touch Hold to Set on the left side of the screen.

The number of favorites is displayed automatically.

Audio Settings

Audio settings vary by region.

From the now playing screen, touch and the following may display.

Sound

- Equalizer
- Fade/Balance
- Sound Mode (if equipped)

Adaptive Volume

Touch to turn On or Off.

Manage Radio Favorites

Displays a list of audio favorites that can be moved or deleted.

Radio Text (RDS)

When on, radio station name and messages from radio stations will be shown.

Radio Text (RDS) Categories

When on, category information about current radio content will be shown.

Radio Text–Radio Data System (RDS)

Radio Data System (RDS) relies on receiving specific Radio Data System (RDS) information from radio stations and only works when the information is available. It is possible that a radio station could broadcast information that causes the radio to work improperly.

In addition, Radio Data System (RDS) features are region and country of sale specific. This means specific Radio Data System (RDS) content may not be available in your listening area or in the country you operate the vehicle.

To turn Radio Data System (RDS) features on or off, see "Audio Settings" previously.

The following Radio Data System (RDS) features may be supported by radio broadcasters in your listening area:

Core Radio Text Radio Data System (RDS) Features

- Display radio station name
- Display messages from radio stations
- Provide radio station category information (when available)

Dolby Atmos

If equipped, Dolby Atmos is a spatial audio technology that creates an immersive sound experience in your vehicle. You just need entertainment created in Dolby Atmos on a compatible app to play content. Use or download a compatible app from the Google Play Store to get started.

Satellite Radio

SiriusXM Radio Service

If equipped, vehicles with a SiriusXM radio subscription can receive SiriusXM programming.

SiriusXM radio has a wide variety of programming and commercial-free music, coast to coast, in digital-quality sound. In the U.S., see www.siriusxm.com or call 1-888-601-6296. In Canada, see www.siriusxm.ca or call 1-888-539-7474.

When SiriusXM is active, the channel name, number, song title, and artist appear on the display.

SiriusXM with 360L

SiriusXM with 360L interface has enhanced in-vehicle listening experience for subscribers. The experience now offers more categories and system-learned recommendations toward discovering more personalized content.

To use the full SiriusXM 360L program, including streaming content and listening recommendations, OnStar Connected Access is required and Terms and Conditions must be accepted. No paid data subscription is required. Connected vehicle services vary by model and require a complete working electrical system, cell reception, and GPS signal.

Reference the SiriusXM user guide for use and subscription information.

Playing SiriusXM Content

Touch ◀◀, ❚❚, ▶ or ▶▶ on the audio now playing screen to rewind, pause, play, or fast forward content.

Finding a Channel

From the SiriusXM now playing screen, touch ◁CH or CH▷ to open the SiriusXM tuner channel list.

To directly tune to a channel, touch the Tune icon to enter a channel number using the keypad.

Browsing Content

Touch ☰ to view different browsing content, including:

Channels, Music, On Demand shows and episodes, Sports and News content.

SiriusXM Settings

From the SiriusXM now playing screen, touch the user settings icon to display the SiriusXM settings.

The settings include subscription information, help and support, and listener preferences.

Radio Reception

Unplug any electronic devices from the accessory power outlets if there is static interference.

FM

FM signals only reach about 16 to 65 km (10 to 40 mi). Although the radio has a built-in electronic circuit that automatically works to reduce interference, some static can occur, especially around tall buildings or hills, causing the sound to fade in and out.

AM

The range for most AM stations is greater than FM, especially at night. The longer range may also cause station frequencies to interfere with each other. Storms and power lines may also interfere with radio reception. Try reducing the treble on the radio if static interference occurs.

SiriusXM Satellite Radio Service

If equipped, SiriusXM Satellite Radio Service provides digital radio reception. Tall buildings or hills can interfere with satellite radio signals, causing the sound to fade in and out. In addition, traveling or parking under heavy foliage, bridges, garages, or tunnels may cause loss of the SiriusXM signal for a period of time. Some cellular services may interfere with SiriusXM reception causing signal loss.

Mobile Devices

Making or receiving calls, charging, or just having a mobile device on may cause static interference. Unplug or turn off any mobile devices if this happens.

Multi-Band Antenna

The multi-band antenna may be used for radio, navigation, and other communication systems, depending on the equipped options. To ensure clear reception, keep the antenna clear of obstructions like snow and ice. An open sunroof or roof-mounted cargo can also affect reception.

Audio Players

Avoiding Untrusted Media Devices

Avoid using untrusted mobile and USB media devices that may negatively affect system operation or performance.

USB Port

Caution
To avoid vehicle damage, unplug all accessories and disconnect all accessory cables from the vehicle when not in use. Accessory cables left plugged into the (Continued)

Caution (Continued)

vehicle, unconnected to a device, could be damaged or cause an electrical short if the unconnected end comes in contact with liquids or another power source such as the accessory power outlet.

The vehicle may be equipped with multiple USB ports. Music may be played from a connected USB device. Ports may also be used for charging.

USB Audio

To play music:

1. On the audio now playing screen, select Source> USB.
2. If there is no device connected, connect the device.
3. Supported media content will appear on the display.

Bluetooth Audio

A connected Bluetooth mobile device can play music.

Use the infotainment controls to adjust volume and select songs. Check the volume setting on the infotainment system or the connected mobile device if Bluetooth is selected and no volume is present.

To play music via Bluetooth:

1. On the audio now playing page, touch source and select the desired Bluetooth mobile device.
2. If there is no mobile device connected, follow the screen prompts to pair the device.
3. Supported media content will appear on the display.

Manage Bluetooth Devices

Managing Bluetooth devices allows you to add, delete, or select another paired mobile device.

Only one Bluetooth mobile device can be active at a time.

Some mobile devices support sending Bluetooth music information to display on the radio. For more information about supported Bluetooth features, visit your brand website. See *Online Account and Customer Support* ⇨ *351* for details.

Navigation

Using the Navigation System

Google Maps provides the navigation software. This section offers a general overview and may change over time. For the latest functional information, see g.co/mapsincar.

Accept the Terms and Conditions to use.

Internet Connectivity

A subscription data plan enables Google Maps' full functionality, including offline map availability. With an applicable connected services plan, Google Maps automatically downloads offline maps before losing connectivity, allowing for offline use in dead zones while driving.

Profiles

Sign in to a Google Account to receive personalized service. Google Account information appears as available.

To log into a profile, see Accounts under *Settings* ⇨ *154*.

Voice Assistant

If equipped, Google Maps can be controlled by voice commands. See Google Assistant under *Voice Recognition* ⇨ *142*.

Language and Units

To change the language and units, see *Settings* ⇨ *154*.

Mute Settings

During active route guidance, Google Maps provides audible voice directions and traffic alerts or mutes them when needed. In the Google Maps app, access the options by selecting Settings, then Mute settings. Alternatively, mute audible voice directions and traffic alerts by tapping the sound icon on the navigation map screen during active navigation.

Compass

The Google Maps orientation can be changed between the direction currently traveling, pointing north, and route overview. Select the compass to switch between these options.

To recenter the map to the current location, select the location icon.

Super Cruise

If equipped, Super Cruise highlights routes in a specific outline. See *Super Cruise* ⇨ *217*.

Electric Vehicle (EV) Features with Google Maps

When vehicle data is shared with Google, some of the Maps features for EVs are as follows:

- Estimated battery charge level at arrival
- Estimated minimum charging time in order to reach destination

If the vehicle needs to be charged to reach a destination, charging stations may automatically be added to a route.

Maps

Auto-Downloaded Maps

Google Maps downloads maps automatically for use when not connected to the Internet. Offline maps make map data available to vehicle features regardless of connectivity.

To turn on auto-download:

1. Open Google Maps.
2. Touch the Settings icon.
3. Touch Privacy center, then select Offline maps.
4. Select Auto-download offline maps.
5. Check the Internet connection and wait for the download to finish.

Downloading Offline Maps

1. Open Google Maps.
2. Touch Settings, then Offline maps.
3. Touch the Select your own map square icon.
4. Adjust the map to cover the desired area to download.
5. Touch Download.

Navigation Symbols

The following are the most common symbols that may appear in Google Maps.



This indicates the vehicle's current location and direction on the map.



The destination pin marks the location of the final destination. Touch the pin to view the destination address or to add it or remove it from the Favorites list. Hide the information by touching the pin one more time. It will automatically time out if no action is taken.

A second pin in the menu is the route overview. Touch this pin to show more details of the destination or to remove the destination.

Destination

Searching for a Destination

A destination can be searched using Google Assistant.

To search for a destination without Google Assistant:

1. Open Google Maps.
2. Touch the Search field.
3. Enter the destination.
4. Touch the Navigation icon.

Alternate Routes

Alternate routes are displayed as separate lines. While in either Turn-by-Turn navigation or on the route overview, touch the suggested alternate route.

Adding a Stop on Route by Voice

1. While in Turn-by-Turn navigation, touch the Search icon at the bottom.
2. Touch the Google Assistant mic icon and say the destination to search by voice.
3. Select the desired search result from the list.
4. Touch the Add stop icon.

Adding a Stop on Route by Category

1. While in Turn-by-Turn navigation, touch the Search icon at the bottom.
2. Select a category.
3. Select the desired search result from the list.
4. Touch the Add stop icon.

Adding a Home or Work Address

To edit a home or work address, an account must be logged in. See Profiles and Accounts under *Settings* ⇨ *154*.

1. Open Google Maps.
2. Touch Settings, then touch Edit home or work.
3. Enter the address.

Search by Category

Destinations can be searched by category, such as restaurant or grocery store.

1. Open Google Maps.
2. Touch the search bar.
3. Touch Categories, then select a category.
4. Touch the desired location, then touch the Navigation icon.

Avoid Tolls, Highways, or Ferries

1. Open Google Maps.
2. Touch the Settings icon.
3. Select Route options.
4. Select the desired options and then touch X to close.

An Alternative Way for General Route Options

1. During active route guidance, touch Route Overview.
2. Select Route options.
3. Select the desired option and then touch X to close.

Traffic Layers

1. Open Google Maps.
2. Touch the Settings icon.
3. Touch Traffic to turn on or off.

Global Positioning System (GPS)

GPS uses satellite and various vehicle signals to determine the current vehicle position for the navigation system.

Interference from the satellite condition, road configuration, condition of the vehicle, and/or other circumstances can affect the navigation system's ability to determine the accurate position of the vehicle.

This system might not be available or interference can occur if any of the following are true:

- Signals are obstructed by tall buildings, trees, large trucks, or a tunnel.
- Satellites are being repaired or improved.

For more information if GPS is not functioning properly, see *Problems with Route Guidance* ⇨ *142*.

Vehicle Positioning

At times, the position of the vehicle on the map could be inaccurate due to one or more of the following reasons:

- The road system changes.
- You are driving on slippery road surfaces such as sand, gravel, or snow.
- You are traveling on winding roads or long, straight roads.
- The vehicle is approaching a tall building or a large vehicle.
- The vehicle is running parallel to a freeway on surface streets.
- A vehicle carrier or ferry is transferring the vehicle.
- The current position calibration is set incorrectly.
- You are traveling at high speed.
- You are changing directions often, or the vehicle is on a turntable in a parking lot.
- You are driving into or exiting out of a parking lot, garage, or a lot with a roof.
- The vehicle is unable to receive a GPS signal.
- The vehicle has a roof carrier.
- The vehicle has tire traction devices.
- The vehicle has newly replaced or worn tires.
- The tire pressure is incorrect.
- The navigation system is using map data for the first time after an update.
- The 12-volt battery has been disconnected for several days.
- You are driving in heavy traffic at low speeds and the vehicle is stopping and starting repeatedly.

Problems with Route Guidance

Incorrect route guidance can occur under one or more of the following conditions:

- Missing a turn on the indicated road.
- Turning at an intersection.
- Recent changes to roads, or roads not listed in Maps.

Additionally, route guidance may be unavailable if:

- Using automatic rerouting for the next right or left turn.
- Regulations (time, season, construction zone, etc.) prohibit vehicle entry.
- The route is not found.

When navigating to a destination that does not pass through the set waypoint, the system may automatically recalculate the route to return to the waypoint.

To recalibrate the map position, park in a safe, open area free from large obstructions, with the vehicle on for two to five minutes until the position updates.

Voice Recognition

If equipped, the vehicle's built in Google Assistant allows for hands-free use of media and messaging, navigation and climate control functionality in the vehicle. To activate, quickly press and release on the steering wheel, touch Google Assistant on the infotainment app screen, or use the wake up words “Hey Google” or “OK Google.” Google Assistant must be set as the default assistant for steering wheel and wake word activation to work.

However, not all features within these areas are supported by voice commands and requires the user to have a valid data subscription plan or be able to connect to an external Wi-Fi in order to use the Google Assistant features.

Using Voice Recognition

Voice recognition becomes available once the system is initialized. This begins when the vehicle is turned on. Initialization may take a few moments.

1. Quickly press and release on the steering wheel controls, touch Google Assistant on the infotainment app screen, or use the wake up words “Hey Google” or “OK Google” to activate voice recognition. Google Assistant must be set as the Default Assistant for the and the wake word options to work.
2. Clearly speak one of the commands described later in this section.

Canceling Google Assistant

- Press on the steering wheel controls to cancel the Google Assistant request.

Helpful Hints for Speaking Commands

Voice recognition identifies commands that are naturally stated in sentence form, or direct commands that state the application and the task.

For best results:

- Speak the command naturally, not too fast, not too slow.

- Use direct commands without a lot of extra words. For example, “Call <name> at work,” “Play” followed by the artist or song name, or “Play” followed by the radio station number.

Direct commands are more clearly understood by the system. An example of a direct command is “Call <number>.”

If a cell phone number was saved with a name and a place, the direct command should include both. For example “Call <name> at work.”

Voice Recognition for the Radio

When voice is started, the voice recognition commands for AM, FM, SiriusXM (if equipped), and media apps (if supported) are available.

“Play <AM frequency> AM”: Tune to the radio station frequency identified in the command (like “nine fifty”).

“Play <FM frequency> FM”: Tune to the radio station frequency identified in the command (like “one oh one point one”).

“Play channel <SiriusXM channel number> on SiriusXM” : Tune to the SiriusXM radio station channel number identified in the command. This command may require an online connection.

“Play <SiriusXM channel name> on Sirius XM”: Tune to the SiriusXM radio station channel name identified in the command. This command may require an online connection.

“Play <Media> on <Audio Source>” : Play media like a song or channel using a specified audio source such as Pandora or Spotify. This command may require an online connection.

Voice Recognition for the Phone

Make sure the phone is paired using Bluetooth to use the phone related voice commands.

“Call <contact name>”: Initiate a call to a stored contact. The command may include location if the contact has location numbers stored.

“Call < phone number>”: Initiate a call to a phone number of seven digits or 10 digits.

“Send a message to <contact name>”: Send a message to a stored contact.

Voice Recognition for Navigation

Navigation commands can be used to start, cancel route, or add way points/POI.

“Navigate to <destination address>”: Initiate navigation to the address in the command.

“Find a <Place of Interest>”: Find and initiate navigation to a POI in the command.

“Add <destination> on my way”: Adds a way-point to the current route.

“Take me home”: Starts navigation to Home location set in Google maps.

Onboard Vehicle Commands

These commands can be used to adjust vehicle temperature, control window defrosters, etc.

“Turn on the A/C”: Turns on the air conditioning.

“Set temperature to <desired number> degrees”: Set to a specific temperature inside your vehicle.

Phone Assistant Voice Recognition

While a mobile phone is connected via Bluetooth, press and hold  on the steering wheel controls until you hear a response from the phone's voice assistant , which will launch the Voice Assistant on the connected mobile phone (e.g., Google Assistant, Siri, etc.).

Phone

Bluetooth (Overview)

The vehicle's Bluetooth system can interact with a mobile device to:

- Place and receive calls in a hands-free mode.
- Share the device's address book or contact list with the vehicle.
- Stream audio (music, podcasts).
- Notify receipt and reply to text messages depending on phone type.

To minimize driver distraction, before driving, and with the vehicle parked:

- Become familiar with the features of the mobile device. Organize the phone book and contact lists clearly and delete duplicate or unused entries.
- Review the controls and operation of the infotainment system.
- Pair mobile device(s) to the vehicle. The system may not work with all mobile devices. See "Pairing" later in this section.

Vehicles with a Bluetooth system can use a Bluetooth-capable mobile device with a Hands-Free Profile to make and receive phone calls. The infotainment system and voice recognition are used to control the system. The system can be used while the vehicle is on. The range of the Bluetooth system can be up to 9.1 m (30 ft). Not all mobile devices support all functions and not all mobile devices work with the Bluetooth system. See *Online Account and Customer Support* ⇨ *351* for more information about compatible mobile devices.

Controls

Use the controls on the infotainment display and the steering wheel to operate the Bluetooth system.

Steering Wheel Controls

: Press and hold until you hear a response from the phone's voice assistant to start voice recognition on your mobile phone that is connected through Bluetooth. If there is an incoming call, then a press and release will answer the call.

: Press to end a call, decline a call, or cancel an operation. Press to mute or unmute the infotainment system when not on a call.

Infotainment System Controls

For information about how to navigate the menu system using the infotainment controls, see *Using the System* ⇨ *133*.

Audio System

When using the Bluetooth system, sound comes through the vehicle's front audio system speakers and overrides the audio system. The volume level while on a mobile device phone call can be adjusted by pressing the steering wheel volume controls or the volume controls for the infotainment system. The adjusted volume level remains the same for later calls. The volume cannot be lowered beyond a certain level.

Bluetooth (Pairing and Using a Phone)

Pairing

A Bluetooth-enabled mobile device must be paired to the Bluetooth system and then connected to the vehicle before it can be used. See the mobile device manufacturer's user guide for Bluetooth functions before pairing the device.

Pairing Information

- Select the Phone icon on the infotainment app screen.
- If no mobile device has been paired, a message on the infotainment display will show the Manage Phones option. Select this option and the Phones screen will display. See “Pairing a Phone” later in this section.
- A mobile device with music capability can be paired to the vehicle as a phone and a music player at the same time.
- Up to 10 devices can be paired to the Bluetooth system.
- The pairing process is disabled when the vehicle is moving.
- Pairing only needs to be completed once, unless the pairing information on the mobile device changes or the phone is deleted from the system.
- If a previously paired mobile device is not connecting to the Bluetooth system, try forgetting the mobile device on the vehicle’s infotainment system and also forgetting the vehicle in the Bluetooth settings of the mobile device. Then repeat the pairing process.
- If multiple paired mobile devices are within range of the system, the system connects to the paired mobile device that is set to First to Connect. If there is no mobile device set to First to Connect, it will connect to the mobile device which was used last. To connect to a different paired mobile device, see “Connecting to a Different Phone” later in this section.

Pairing a Phone

1. Make sure Bluetooth has been enabled on the mobile device before starting the pairing process.
2. Select the Phone icon on the infotainment app screen.
3. If a mobile device has been previously added, select Settings > Connections > Phones to reach the device manager. From the device manager, select "Add Phone." If a phone has been previously added, the “Add Phone” card will just be a “+” button.
4. Select Manage Phones to display the Phones screen.
5. Select Add Phone.

   If a mobile device has been previously added or disconnected, the “Add Phone” card will just be a “+” card.
6. Select the phone name on the infotainment screen of the vehicle name on the phone.
7. The code on both the mobile device and infotainment display need to be acknowledged for pairing to be successful.
8. Follow the instructions on the mobile device to confirm the six-digit code showing on the infotainment display and select Pair. The codes on the mobile device and infotainment display need to be acknowledged for pairing to be successful.
9. If a previously paired mobile device is not connecting to the Bluetooth system, try forgetting the mobile device on the vehicle’s infotainment system and also forgetting the vehicle in the Bluetooth settings of the mobile device.
10. If the vehicle name does not appear on your mobile device under the “other devices” or “available devices” menu, there are a few ways to start the pairing process over:

- Turn Bluetooth off then back on, on your mobile device.
- Go back to the beginning of the Phone menus on the infotainment display and restart the pairing process.
- Turn the mobile device off and then back on.
- Reset the mobile device, but this step should be done as a last effort.

11. If the mobile device prompts to accept connection or allow phone book download, select Always Accept and Allow. The phone book may not be available if not accepted.
12. To pair additional mobile devices, select Settings > Connections > Phones.

First to Connect Paired Phones

If multiple paired mobile devices are within range of the system, the system connects to the paired phone that is set as First to Connect. To enable a paired mobile device as the First to Connect phone:

1. Make sure the mobile device is turned on.
2. Select the Settings icon on the infotainment app screen.
3. Select Connections.
4. Select Phone.
5. Select Options under the connected phone.
6. Select First to Connect from the phone's settings menu and set First to Connect to On.

Phones and mobile devices can be added, removed, connected, and disconnected. A sub-menu will display whenever a request is made to add or manage phones and mobile devices.

Accessing the Device List Screen

There are two ways to access the device list screen:

Using the Settings Icon

1. Select the Settings icon on the infotainment app screen or the Settings icon on the application tray near the left of the display.
2. Select Connections.
3. Select Phones.

Using the Phone Icon

1. Select the Phone icon on the infotainment app screen or the Phone icon on the application tray near the left of the display.
2. Select ⚙ on the Phones screen.
3. Select Connected Phone.

Disconnecting a Connected Phone

To disconnect a phone:

1. Open the Device List Screen. See "Accessing the Device List Screen" previously in this section.
2. Select Option on the phone card to show the phone's or mobile device's settings.
3. Select the prompt to disconnect the phone.

Deleting a Paired Phone

To delete a paired phone:

1. Open the Device List Screen. See "Accessing the Device List Screen" previously in this section.
2. Select Option on the phone card to show the phone's or mobile device's settings.
3. Select Forget Phone.

Connecting to a Different Phone

To connect to a different phone, the new phone must be in the vehicle and paired to the Bluetooth system.

To connect to a different phone:

1. Open the Device List Screen. See "Accessing the Device List Screen" previously in this section.
2. Select the new phone you want to connect to from the list of available phones. See "First to Connect Paired Phones" previously in this section.

Switching to Handset or Hands-Free Mode

To switch between handset or hands-free mode:

- While the active call is hands-free, select the Audio Output option, then select Phone to switch to the handset mode.

  The mute icon will not be available or functional while Handset mode is active.
- While the active call is on the handset, select the Audio Output option, then select Car Speakers to switch to the hands-free mode.

Making a Call Using Contacts

Calls can be made through the Bluetooth system using personal phone contact information for all phones that support the Phone Book feature. Become familiar with the phone settings and operation and that the phone is set to allow the sharing of contacts over Bluetooth with the vehicle. Verify the phone supports this feature and that the phone is set to allow the sharing of contacts over Bluetooth with the vehicle.

The Contacts menu accesses the phone book stored in the phone.

To make a call using the Contacts menu:

1. Select the Phone icon on the infotainment app screen or on the application tray near the left of the display.
2. Select Contacts.

   If a contact has more than one assigned number, a window will appear with the option to choose a phone number from a list. Select the preferred number to call and then confirm if the selection is "Just once" or "Always." By choosing "Always" the selection made will remain the default number assigned to this contact for as long as the phone is connected to the vehicle.
3. There are two methods to search for contacts:
   - Search bar – Select the search icon on the top right of the Phones window and type the name or number of the contact on the keyboard. Search results will be displayed corresponding to the user input. Select the name to call.
   - Scroll – Select the list and scroll, or use the scrollbar on the left side of the Phones window. Select the name to call.

Making a Call Using the Recents Menu

The Recents menu accesses the recents call list from your phone.

To make a call using the Recents menu:

1. Select the Phone icon on the infotainment app screen or on the application tray near the left of the display.
2. Select Recents.
3. There are two methods for placing a call:
   - Select the name or phone number to call.

- Select the contact card to the right of the name or phone number. Within the contact card select the phone number to call.

Making a Call Using the Keypad

To make a call by dialing the numbers:

1. Select the Phone icon on the infotainment app screen or on the application tray near the left of the display.
2. Select Keypad and enter a phone number.
3. There are two methods for placing a call:
   - Select the phone icon in the keypad.
   - Select the contact name to the right of the keypad. If the phone number is stored with a contact, the contact will appear as the number is typed into the keypad.

Searching Contacts Using the Keypad

To search for contacts using the keypad:

1. Select the Phone icon on the infotainment app screen.
2. Select Keypad and enter partial phone numbers or contact names using the digits on the keypad to search. Results appear on the right side of the display. Select one to place a call.

Accepting or Declining a Call

When an incoming call is received, the infotainment system mutes and a ring tone is heard in the vehicle.

Accepting a Call

To Accept a call, select Answer on the infotainment display.

Declining a Call

To decline a call, press on the steering wheel controls or Decline on the infotainment display.

Call Waiting, Merging, and Conferencing

Call waiting, merging, and conferencing must be supported on the Bluetooth mobile device and enabled by the wireless service carrier to work.

When an incoming call is received during an active call, press on the steering wheel controls or "Answer" from the infotainment display. This will answer the incoming call and place the active call on hold.

To switch between the calls, select the Switch icon on the infotainment display.

To merge the calls, select "Merge" within the Active Call Screen on the infotainment display. This creates a three-way conference. If another call is received during a three-way conference, it can be answered, but it will place the conference on hold.

Making a Call Using Favorites

1. Select the Phone icon on the infotainment app screen or on the application tray near the left of the display.
2. Select Favorites.
   - The vehicle can sync up to five favorites from the phone.
   - The vehicle can also store up to five additional contacts as vehicle favorites. These will be stored for as long as the phone is paired and connected. If the phone is unpaired/ forgotten by the vehicle, the vehicle favorites will be deleted.

To add a favorite for the vehicle:

1. Select "Add Favorite."
2. Select a contact from the Phone Book.

3. Select the star icon next to the phone number to add as a favorite.

Ending a Call

- Press on the steering wheel controls.
- Select on the infotainment display, next to a call, to end only that call.

Dual Tone Multi-Frequency Tones

The in-vehicle Bluetooth system can send numbers during a call. This is used when calling a menu-driven phone system. Use the Keypad to enter the number.

Bluetooth (Pairing and Using a Phone Equipped with Active Pairing)

Pairing

To use a Bluetooth-enabled mobile device, you must first pair it with the vehicle's Bluetooth system. See the devices user guide for Bluetooth functions before pairing the device.

Pairing Information

- Select the phone icon on the infotainment app screen.
- If no mobile device is paired, the infotainment display will show the Manage Phones option. Select this option and the Phones screen will display. See "Pairing a Phone" later in this section.
- A Bluetooth mobile device with music capability can be paired with the vehicle as both a phone and a music player.
- Up to 10 devices can be paired to the Bluetooth system.
- The pairing process is disabled when the vehicle is moving.
- Pairing only needs to be completed once, unless the mobile device information changes or is deleted from the system.
- If a previously paired mobile device is not connecting to the Bluetooth system, try forgetting the mobile device on the vehicle's infotainment system and forgetting the vehicle in the Bluetooth settings of the mobile device. Then repeat the pairing process.
- If multiple paired mobile devices are within range, the system connects to the one set as First to Connect. If none are set, it connects to the last used mobile device. To switch devices, see "Connecting to a Different Phone" later in this section.

Pairing a New Device

1. Open your mobile device's Bluetooth settings to start the pairing process.
2. On the infotainment app screen, select Settings > Connections > Devices to reach the device list.
3. Select "Add Device" and/or (+).
4. All nearby compatible Bluetooth devices will appear on the screen. Select the device you want to pair.
5. If the code on the device and vehicle screen match, select "Pair" on both.
6. Check your device for prompts. If prompted to sync contacts, select "Always Allow" or "Accept". Your device contacts and phone app features will not be available if not accepted.

Repeat steps 1–6 to pair additional phones.

Reconnect a Previously Paired Device

1. From the infotainment app screen, select Settings > Connections > Devices.

2. Tap the device card you want to reconnect.

Troubleshooting

If a previously paired device will not reconnect via Bluetooth:

1. Forget the device in the vehicle.
   1.1 From the infotainment app screen, select Settings > Connections > Devices.
   1.2 Choose the device you want to forget, and then select Options > Forget Device.
   1.3 Confirm your selection.
2. Forget the vehicle on the device. Open the Bluetooth settings, look for the vehicle name, and follow the option to forget.
3. Select "Add Phone" and follow the "Pairing a New Device" steps previously in this section.

If the device name does not appear on the vehicle screen:

- Open Bluetooth settings. The settings must remain open to pair the device.
- Make sure Bluetooth is set to "On" in device settings.
- From the infotainment app screen Select Settings > Connections > Devices to return to the device list and restart the pairing process.
- Turn the device off and then back on, and repeat the pairing process.

First to Connect Paired Phones

If multiple paired phones are within range, the system connects to the one set as First to Connect. To enable a paired phone as the First to Connect phone:

1. Make sure the phone is on.
2. From the infotainment app screen, select the Settings > Connections > Phone .
3. Select Options under the connected phone.
4. Select First to Connect and set to On.

Phones and mobile devices can be added, removed, connected, and disconnected. A sub-menu will display whenever a request is made to add or manage phones and mobile devices.

Accessing the Device List Screen

There are two ways to access the device list screen:

Using the Settings Icon:

Select the Settings icon on the infotainment app screen, then select Connections > Devices.

Using the Phone Icon:

Select the Phone icon on the infotainment app screen, then select  > Connected Phone.

Disconnecting a Connected Phone

To disconnect a phone:

1. Open the Device List Screen. See "Accessing the Device List Screen" previously in this section.
2. Select Option on the phone card to show the mobile device's settings.
3. Select the prompt to disconnect the phone.

Deleting a Paired Phone

To delete a paired phone:

1. Open the Device List Screen. See "Accessing the Device List Screen" previously in this section.
2. Select Option on the phone card to show the mobile device's settings.
3. Select Forget Phone.

Connecting to a Different Phone

To connect to a different phone, the new phone must be in the vehicle and paired to Bluetooth.

1. Open the Device List Screen. See "Accessing the Device List Screen" previously in this section.
2. Select the new phone you want to connect to from the list of available phones. See "First to Connect Paired Phones" previously in this section.

Switching Between Handset and Hands-Free Mode

To switch between handset or hands-free mode:

- While the active call is hands-free, select the Audio Output option, then select Phone to switch to the handset mode.

  The mute icon will not be available or functional while Handset mode is active.
- While the active call is on the handset, select the Audio Output option, then select Car Speakers to switch to the hands-free mode.

Making a Call Using Contacts

Calls can be made through the Bluetooth system using personal phone contact information for all phones that support the Phone Book feature. Become familiar with the phone settings and operation and that the phone is set to allow the sharing of contacts over Bluetooth with the vehicle. Verify the phone supports this feature and that the phone is set to allow the sharing of contacts over Bluetooth with the vehicle.

The Contacts menu accesses the phone book stored in the phone.

To make a call using the Contacts menu:

1. Select the Phone icon on the infotainment app screen or on the application tray near the left of the display.
2. Select Contacts.

   If a contact has more than one assigned number, a window will appear with the option to choose a phone number from a list. Select the preferred number to call and then confirm if the selection is "Just once" or "Always". By choosing "Always" the selection made will remain the default number assigned to this contact for as long as the phone is connected to the vehicle.
3. There are two methods to search for contacts:
   - Search bar – Select the search icon on the top right of the Phones window and type the name or number of the contact on the keyboard. Search results will be displayed corresponding to the user input. Select the name to call.
   - Scroll – Select the list and scroll, or use the scrollbar on the left side of the Phones window. Select the name to call.

Making a Call Using the Recents Menu

The Recents menu accesses the recents call list from your phone.

To make a call using the Recents menu:

1. Select the Phone icon on the infotainment app screen or on the application tray near the left of the display.
2. Select Recents.
3. There are two methods for placing a call:
   - Select the name or phone number to call.

- Select the contact card to the right of the name or phone number. Within the contact card select the phone number to call.

Making a Call Using the Keypad

To make a call by dialing the numbers:

1. Select the Phone icon on the infotainment app screen or on the application tray near the left of the display.
2. Select Keypad and enter a phone number.
3. There are two methods for placing a call:
   - Select the phone icon in the keypad.
   - Select the contact name to the right of the keypad. If the phone number is stored with a contact, the contact will appear as the number is typed into the keypad.

Searching Contacts Using the Keypad

To search for contacts using the keypad:

1. Select the Phone icon on the infotainment app screen.
2. Select Keypad and enter partial phone numbers or contact names using the digits on the keypad to search. Results appear on the right side of the display. Select one to place a call.

Accepting or Declining a Call

When an incoming call is received, the infotainment system mutes and a ring tone is heard in the vehicle.

Accepting a Call

To Accept a call, select Answer on the infotainment display.

Declining a Call

To decline a call, press on the steering wheel controls or Decline on the infotainment display.

Call Waiting, Merging, and Conferencing

Call waiting, merging, and conferencing must be supported on the Bluetooth mobile device and enabled by the wireless service carrier to work.

When an incoming call is received during an active call, press on the steering wheel controls or "Answer" from the infotainment display. This will answer the incoming call and place the active call on hold.

To switch between the calls, select the Switch icon on the infotainment display.

To merge the calls, select "Merge" within the Active Call Screen on the infotainment display. This creates a three-way conference. If another call is received during a three-way conference, it can be answered, but it will place the conference on hold.

Making a Call Using Favorites

1. Select the Phone icon on the infotainment app screen or on the application tray near the left of the display.
2. Select Favorites.
   - The vehicle can sync up to five favorites from the phone.
   - The vehicle can also store up to five additional contacts as vehicle favorites. These will be stored for as long as the phone is paired and connected. If the phone is unpaired/ forgotten by the vehicle, the vehicle favorites will be deleted.

To add a favorite for the vehicle:

1. Select "Add Favorite".
2. Select a contact from the Phone Book.

3. Select the star icon next to the phone number to add as a favorite.

Ending a Call

Press on the steering wheel controls or select on the infotainment display, next to a call, to end only that call.

Dual Tone Multi-Frequency Tones

The in-vehicle Bluetooth system allows you to enter numbers using the Keypad during a call which is useful for navigation menu-driven phone systems.

Apple CarPlay and Android Auto

If equipped, Apple CarPlay and/or Android Auto capability may be available through a compatible smartphone. If the phone is paired and projections are available, Apple CarPlay and/or Android Auto icons will become illuminated on the infotainment app screen.

To use Apple CarPlay and/or Android Auto:

For Wired Phone Projection

1. For Android 9 smartphones and older, download the Android Auto app to your phone from the Google Play Store. There is no app required for Apple CarPlay.
2. Connect your Android phone or Apple iPhone by using the factory-provided phone USB cable and plugging into a USB data port. For best performance, it is highly recommended to use the device's factory-provided USB cable, which should be replaced after significant wear to maintain connection quality. Aftermarket or third-party cables may not work.
3. When the phone is first connected, to activate Apple CarPlay or Android Auto, accept the terms and conditions on both the infotainment system and the phone.
4. Follow the instructions on the phone.

The Android Auto and Apple CarPlay icons on the infotainment app screen will illuminate. Android Auto and/or Apple CarPlay may automatically launch the next time the USB is connected. If not, select the Android Auto or Apple CarPlay icon on the infotainment app screen to launch.

Press the home button on the center stack to return to the infotainment home screen.

For Wireless Phone Projection

Verify your phone is wireless compatible by visiting the Android Auto or Apple CarPlay support page.

1. For Android 9 smartphones and older, download the Android Auto app to your phone from the phones Google Play Store. There is no app required for Apple CarPlay.
2. For first time connection, make sure Bluetooth and Wi-Fi are turned on in phone settings. To connect the phone over Bluetooth, see *Bluetooth (Pairing and Using a Phone)* ⇨ *144 Bluetooth (Overview)* ⇨ *144 Bluetooth (Pairing and Using a Phone Equipped with Active Pairing)* ⇨ *149*.
3. When the phone is first connected, to activate Apple CarPlay or Android Auto, agree to the terms and conditions on both the infotainment system and the phone.
4. Follow the instructions on the phone.

The Android Auto and Apple CarPlay icons on the infotainment app screen will illuminate. Android Auto and/or Apple CarPlay may automatically launch upon wireless

connection. If not, select the Android Auto or Apple CarPlay icon on the infotainment app screen to launch.

Wireless CarPlay and/or Wireless Android Auto may experience occasional service disruption due to outside Wi-Fi interference.

To disconnect the phones wireless projection for that paired device:

1. Select the Settings from the infotainment app screen.
2. Select Connections.
3. Select Phones or Devices.
4. Select the Bluetooth icon or Options on the phone card.
5. Select Connection Type from the list and choose Bluetooth Calling and Media.

Press the home button on the center stack to return to the infotainment home screen.

Features are subject to change. For further information on how to set up Android Auto and Apple CarPlay in the vehicle, visit your brand website. See *Online Account and Customer Support* ⇨ *351* for details.

CarPlay will not support Fast Connect on iPhones with iOS version 13 or older.

Android Auto is provided by Google and is subject to Google's terms and privacy policy. Apple CarPlay is provided by Apple and is subject to Apple's terms and privacy policy. Data plan rates apply. For Android Auto support and to see if your phone is compatible, see www.android.com/auto/compatability. For Apple CarPlay support and to see if your phone is compatible, see www.apple.com/ios/carplay/. Apple or Google may change or suspend availability at any time. Google, Android, Android Auto, Google Maps, and other marks are trademarks of Google LLC. Apple CarPlay is a trademark of Apple Inc.

Press the home button on the center stack to exit Android Auto or Apple CarPlay. To enter back into Android Auto or Apple CarPlay, press and hold the home button on the center stack.

If applicable, Android Auto and/or Apple CarPlay may be disabled from the infotainment system. To do this, from the app screen select Settings > Connections. Scroll down the list to find Android Auto or Apple CarPlay. Use the On/Off toggle to turn Android Auto or Apple CarPlay on or off for the entire system.

Settings

To access the Settings menus:

1. Touch Settings on the infotainment app screen.
2. Touch the desired feature setting.
3. Touch the options on the infotainment display to change a setting.
4. Touch < to go back.

The Settings menu may contain the following:

Connections

The menu may contain the following:

Phones

Allows connecting to a different cell phone or mobile device source, disconnecting a cell phone or media device, or deleting a cell phone or media device.

Apple CarPlay

Allows use of Apple CarPlay in your vehicle.

Android Auto

Allows use of Android Auto in your vehicle.

Wi-Fi Networks

Shows connected and available Wi-Fi networks.

Wi-Fi Hotspot

Allows adjustment of different Wi-Fi features.

Vehicle-to-Phone Sharing

Allows GM apps to use vehicle data on the listed phones shown.

Trusted Device

Allows for setting a phone as your trusted device to establish a secure communication channel between your phone and vehicle that enables convenient features like instant profile unlocking and account sign in. When your trusted device is nearby, the system automatically recognizes it through a unique Bluetooth connection. Requires MyBrand app.

Vehicle

The menu may contain the following:

Audio Settings

Allows adjustment of different audio settings.

Driver Mode Customization

See *Driver Mode Control* ⇨ *192*.

Valet Mode

Allows adjustment of the valet mode settings.

Teen Driver

See *Teen Driver* ⇨ *156*.

Rear Seat Reminder

Allows for a chime and a message when the rear door has been opened before or during operation of the vehicle.

Buckle to Drive

See *Buckle To Drive* ⇨ *46*.

Super Cruise Lane Change

See *Super Cruise* ⇨ *217*.

Climate and Air Quality

Allows adjustment of different climate settings.

Collision/Detection Systems

Allows adjustment of different driver assistance system settings.

Comfort and Convenience

Allows adjustment of adjustment of different comfort and convenience settings.

Driver Attention Assist

Allows adjustment of different sensitivity levels for drowsiness attention settings.

Lighting

Allows adjustment of different lighting settings.

Power Door Locks

Allows adjustment of different door lock settings.

Remote Lock, Unlock, and Start

Allows adjustment of different remote lock settings.

Seating Position

Allows adjustment of different seating position settings.

Transport Mode

Allows adjustment of transport mode settings.

Notifications

Shows a list of installed apps and the permissions used.

Apps

Shows app settings and information.

Date/Time

Allows setting of the clock.

Display

Allows adjustment of the infotainment display.

Sounds

Allows adjustment of the infotainment system sounds.

Profiles and Accounts

Modifies the infotainment system's profiles and provides access to the accounts assigned to the currently active profile. Profiles can be setup and/or modified as Admin profiles or Guest profiles.

Privacy

Allows adjustment of the infotainment privacy settings.

Accessibility

Shows the accessibility information on the infotainment system.

Assistant and Voice

Allows adjustment of assistant and voice settings.

Security

Allows adjustment of the infotainment security settings.

System

The menu may contain the following:

Language

This will set the display language used on the infotainment display.

Keyboard and Speech

Touch to change keyboard and speech settings.

Units

Touch to change units settings.

Reset Options

Touch to change reset settings. The submenu "Erase Infotainment Data" is only accessible if the profile logged into the vehicle is configured as an "Admin."

TTY Mode

Touch to turn off or on.

Storage

Touch to view storage settings.

About

Touch to view the infotainment system software information.

Legal Information

Touch to view legal and license information.

Updates

See *How Your Vehicle is Updated* ⇨ *367*.

Google

Allows adjustment of the Google settings.

Teen Driver

If equipped, this allows multiple keys to be registered for beginner drivers to encourage safe driving habits. When the vehicle is started with a Teen Driver key, it will automatically activate certain safety systems, allow setting of some features, and limit the use of others. The Report Card will record vehicle data about

driving behavior that can be viewed later. When the vehicle is started with a Teen Driver key, the Driver Information Center displays a message that Teen Driver is active.

To access:

1. From the infotainment app screen, select Settings > Vehicle > Teen Driver.
2. Create a PIN by choosing a four-digit PIN. Re-enter the PIN to confirm. To change the PIN, touch Change PIN.

The PIN is required to:

- Set up/add or remove keys.
- Change Teen Driver settings.
- Change or clear the Teen Driver PIN.
- Access or delete Report Card data.

Set up/Add keys to activate Teen Driver and assign restrictions to the key:

Any vehicle key can be registered, up to a maximum of eight keys. Label the Teen Driver key to tell it apart from the other keys.

For a pushbutton start system:

1. Start the vehicle.
2. The vehicle must be in P (Park).
3. From the Settings menu, touch Vehicle and then Teen Driver.
4. Enter the PIN.
5. Place the remote key you wish to register in the transmitter pocket. The key does not need to be the one that started the vehicle.
6. From the Teen Driver menu, touch Setup Keys or Add/Remove Teen Driver Keys.
    - If the remote key has not previously been registered, the option to add the key displays. Touch Add and a confirmation message displays. Teen Driver restrictions will be applied whenever this remote key is used to operate the vehicle.
    - If the remote key has already been registered, the option to remove the key displays. If Remove is touched, the remote key is no longer registered. A confirmation message displays, and Teen Driver restrictions will not be applied if this remote key is used to operate the vehicle.

In vehicles with a pushbutton start system, if a Teen Driver and a non-Teen Driver key are both present at start up, the vehicle will recognize the non-Teen Driver key to start the vehicle. The Teen Driver settings will not be active.

Manage Settings or Teen Driver Settings

Depending on the options of your vehicle, the following menu items may be displayed:

Buckle to Drive : When turned ON, Buckle to Drive prevents the driver from shifting out of P (Park) for a period of time after the brake pedal is pressed if the driver, or on some vehicles the detected passenger, has not buckled their seat belt. On some vehicles, Buckle to Drive is always ON when Teen Driver is active and is not configurable.

Audio Volume Limit : Allows a maximum audio volume to be set. Turn the audio volume limit on or off. Use the arrows to choose the maximum allowable level for the audio volume. On some infotainment systems, touch Set Audio Volume Limit to choose the maximum allowable audio volume level.

Set Audio Volume Limit : Use the arrows to choose the maximum allowable level for the audio volume.

Teen Driver Speed Limiter : Limits the maximum speed of the vehicle. When the speed limiter is turned on and the vehicle

is started with a Teen Driver key, the Driver Information Center displays a message that the top speed is limited.

On certain vehicles, when the Speed Limiter is turned ON, the vehicle's maximum acceleration will be limited. The Driver Information Center will display a message that the acceleration is limited.

Teen Driver Speed Warning : Displays a warning in the Driver Information Center when exceeding a selectable speed. Turn the speed warning on or off and choose the desired speed warning level. The speed warning does not limit the speed of the vehicle. On some infotainment systems, touch Set Teen Driver Speed Warning to set the warning speed.

Set Teen Driver Speed Warning : Choose the desired speed warning level. The speed warning does not limit the speed of the vehicle.

When Teen Driver is Active:

- If equipped, the radio will mute when the driver seat belt, and in some vehicles the front passenger seat belt, is not buckled. The audio from any device paired to the vehicle will also be muted.
- An object placed on the front passenger seat, such as a briefcase, handbag, grocery bag, laptop, or other electronic device, could cause the passenger sensing system to falsely sense an unbuckled front passenger and mute the radio. If this happens, remove the object from the seat.
- Some safety systems, such as Automatic Emergency Braking, if equipped, cannot be turned off.
- The gap setting for Adaptive Cruise Control and alert timing for Forward Collision Alert, if equipped, cannot be changed.
- When trying to change a safety feature that is not configurable in Teen Driver, the feature may be grayed out or removed from the infotainment menu, or the Driver Information Center will display a message indicating that Teen Driver is active and the action is not available.
- Super Cruise, if equipped, is not available.
- Do not tow a trailer if equipped with Automatic Emergency Braking.
- Daytime Running Lights or headlights are always on when the vehicle is shifted out of P (Park). Even if the headlight control is set to Off or , the Automatic Headlight System is engaged and ensures that either the Daytime Running Lights or headlights come on based on outside light level.

Report Card

The vehicle owner must secure the driver's consent to record certain vehicle data when the vehicle is driven with a registered Teen Driver key. There is one Report Card per vehicle. Data is only recorded when a registered Teen Driver key is used to operate the vehicle.

The Report Card data is collected from the time Teen Driver is activated or the last time the Report Card was reset. The following items may be recorded:

- Distance Driven – the total distance driven.
- Maximum Speed – the maximum vehicle speed detected.
- Overspeed Warnings – the number of times the speed warning setting was exceeded.
- Wide Open Throttle – the number of times the accelerator pedal was pressed nearly all the way down.

- Forward Collision Alerts (if equipped) – the number of times the driver was notified when approaching a vehicle ahead too quickly and at potential risk for a crash.
- Forward Automatic Braking, also called Automatic Emergency Braking (if equipped) – the number of times the vehicle detected that a forward collision was imminent and applied the brakes.
- Reverse Automatic Braking (if equipped) – the number of times the vehicle detected that a rearward collision was imminent and applied the brakes.
- Traction Control – the number of times the Traction Control System activated to reduce wheel spin or loss of traction.
- Stability Control – the number of events which required the use of electronic stability control.
- Antilock Braking System Active – The number of Antilock Brake System activations.
- Tailgating Alerts (if equipped) – the number of times the driver was alerted for following a vehicle ahead too closely.

Report Card Data

Cumulative Data is saved for all trips until the Report Card is reset or until the maximum count is exceeded. If the maximum count is exceeded for a Report Card line item, that item will no longer be updated in the Report Card until it is reset. Each item will report a maximum of 1,000 counts. The distance driven will report a maximum of 64,374 km (40,000 mi).

To delete Report Card data, do one of the following:

- From the Report Card display, touch Reset.
- Touch Clear PIN and All Teen Driver Keys from the Teen Driver menu. This will also unregister any Teen Driver keys and delete the PIN.

Forgotten PIN

See your dealer to reset the PIN.

Trademarks and License Agreements



"Made for iPhone" means that an electronic accessory has been designed to connect specifically to iPhone, and has been certified by the developer to meet Apple performance standards. Apple is not responsible for the operation of this device or its compliance with safety and regulatory standards. Please note that the use of this accessory with iPhone may affect wireless performance. iPhone is a trademark of Apple Inc., registered in the U.S. and other countries.



Android is a trademark of Google LLC.

SiriusXM

Trial length and service availability may vary by model, model year, or trim. Service will automatically stop at the end of your trial subscription period unless you decide to continue service. If you do not wish to enjoy your trial, you can cancel by calling the number below. All SiriusXM services require a subscription, each sold separately by SiriusXM after the trial period. Service subject to the applicable SiriusXM Customer Agreement and Privacy Policy, visit www.siriusxm.com (USA) or www.siriusxm.ca (Canada) to see complete terms and how to cancel which includes calling 1-866-635-2349 (USA) or 1-888-539-7474 (Canada). Some services and features are subject to device capabilities and location availability. Content varies by SiriusXM subscription package. All fees, content, and features are subject to change.

SiriusXM with 360L: Some features, including streaming content and listening recommendations, require an active OnStar Connected Access plan and may vary by vehicle model. Content varies by SiriusXM subscription plan. GM connected vehicle services vary by vehicle model and require active service plan, working electrical system, cell reception, and GPS signal. See onstar.com for details and limitations.

SiriusXM, Pandora, Stitcher, and all related logos are trademarks of SiriusXM Radio Inc. and its respective subsidiaries.

SiriusXM satellite service is only available in the 48 contiguous United States (and Puerto Rico with limited availability) and Canada.

In Canada: Some deterioration of service may occur in extreme northern latitudes. This is beyond the control of SiriusXM.

Explicit Language Notice: Channels with frequent explicit language are indicated with an "XL" after the channel name. Family-friendly packages are available by contacting SiriusXM:

- USA Customers — See www.siriusxm.com or call 1-888-601-6296.
- Canada Customers — See www.siriusxm.ca or call 1-877-438-9677.

It is prohibited to copy, decompile, disassemble, reverse engineer, hack, manipulate, or otherwise make available any technology or software incorporated in receivers compatible with the SiriusXM Satellite Radio System or that support the SiriusXM website, the Online Service, or any of its content.

General Requirements:

1. A License Agreement from SiriusXM is required for any product that incorporates SiriusXM Technology and/or for use of any of the SiriusXM marks to be manufactured, distributed, or marketed in the SiriusXM Service Area.
2. For products to be distributed, marketed, and/or sold in Canada, a separate agreement is required with SiriusXM Canada Inc.



TouchSense Technology and TouchSense System 1000 Series Licensed from Immersion Corporation. TouchSense System 1000 is protected under one or more of the U.S. Patents at the following address www.immersion.com/patent-marking.html and other patents pending.

Bose

Bose AudioPilot and Bose Centerpoint surround are registered trademarks of Bose Corporation in the U.S. and other countries.

Bluetooth

The Bluetooth word mark and logos are owned by the Bluetooth SIG, Inc. and any use of such marks by General Motors is under license. Other trademarks and trade names are those of their respective owners.

Java

Java is a registered trademark of Oracle and/or its affiliates.

MPEG4–AVC (H.264)

THIS PRODUCT IS LICENSED UNDER THE AVC PATENT PORTFOLIO LICENSE FOR THE PERSONAL AND NON-COMMERCIAL USE OF A CONSUMER TO (i) ENCODE VIDEO IN COMPLIANCE WITH THE AVC STANDARD ("AVC VIDEO") AND/OR (ii) DECODE AVC VIDEO THAT WAS ENCODED BY A CONSUMER ENGAGED IN A PERSONAL AND NON-COMMERCIAL ACTIVITY AND/OR WAS OBTAINED FROM A VIDEO PROVIDER LICENSED TO PROVIDE AVC VIDEO. NO LICENSE IS GRANTED OR SHALL BE IMPLIED FOR ANY OTHER USE. ADDITIONAL INFORMATION MAY BE OBTAINED FROM MPEG LA, L.L.C. SEE HTTPS://WWW.MPEGLA.COM.

VC-1

THIS PRODUCT IS LICENSED UNDER THE VC-1 PATENT PORTFOLIO LICENSE FOR THE PERSONAL AND NON-COMMERCIAL USE OF A CONSUMER TO (i) ENCODE VIDEO IN COMPLIANCE WITH THE VC-1 STANDARD ("VC-1 VIDEO") AND/OR (ii) DECODE VC-1 VIDEO THAT WAS ENCODED BY A CONSUMER ENGAGED IN A PERSONAL AND NON-COMMERCIAL ACTIVITY AND/OR WAS OBTAINED FROM A VIDEO PROVIDER LICENSED TO PROVIDE VC-1 VIDEO. NO LICENSE IS GRANTED OR SHALL BE IMPLIED FOR ANY OTHER USE. ADDITIONAL INFORMATION MAY BE OBTAINED FROM MPEG LA, L.L.C. SEE HTTPS://WWW.MPEGLA.COM.

MPEG4–Visual

USE OF THIS PRODUCT IN ANY MANNER THAT COMPLIES WITH THE MPEG-4 VISUAL STANDARD IS PROHIBITED, EXCEPT FOR USE BY A CONSUMER ENGAGING IN PERSONAL AND NON-COMMERCIAL ACTIVITIES.

MP3

MPEG Layer-3 audio coding technology licensed from Fraunhofer IIS and Thomson.

WMV/WMA

This product includes technology owned by Microsoft Corporation and under a license from Microsoft Licensing, GP. Use or distribution of such technology outside of this product is prohibited without a license from Microsoft Corporation and/or Microsoft Licensing, GP as applicable.

Climate Controls

Climate Control Systems
Dual Automatic Climate Control System ..162
Rear Climate Control System 166
Air Vents
Air Vents 166
Maintenance
Passenger Compartment Air Filter 167
Service 168

Climate Control Systems

Dual Automatic Climate Control System

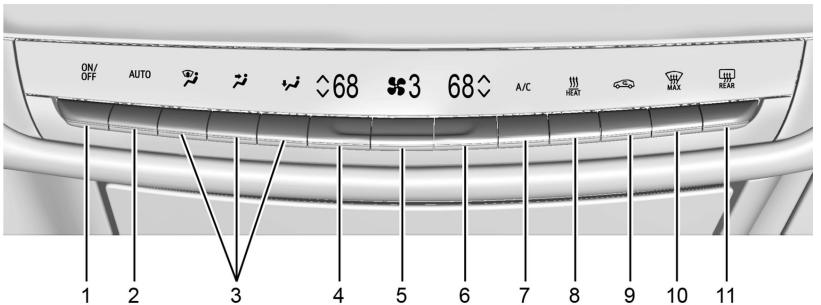

1. ON/OFF
2. AUTO (Automatic Operation)
3. Air Delivery Mode Controls
4. Driver Temperature
5. Fan Control
6. Passenger Temperature
7. A/C (Air Conditioning)
8. HEAT
9. Recirculation
10. MAX Defrost
11. REAR Window Defogger

Climate Control Display

The fan, air delivery mode, air conditioning, temperature, and Sync settings can be controlled by touching CLIMATE on the infotainment app screen or the climate button in the climate control display application tray. A selection can then be made on the front or rear climate control screen displayed.

Automatic Operation

The system automatically controls the fan speed, air delivery, and recirculation to heat or cool the vehicle to the desired temperature.

When AUTO is underlined, the system is in full automatic operation. Either AC or HEAT will be underlined to indicate the system is automatically cooling or heating. Turning off the indicated button turns off that function resulting in fan operation only. If the air delivery mode or fan setting is manually adjusted, the auto indicator turns off and the display shows the selected settings. Auto operation can be turned off individually for climate settings.

For automatic operation:

1. Press AUTO.
2. Set the temperature. Allow the system time to stabilize. Then adjust the temperature as needed for best comfort.

To improve efficiency and to warm or cool the vehicle faster, recirculation is automatically selected. The recirculation light will not come on. Press to select recirculation; press it again to select outside air.

English units can be changed to metric units through the infotainment app screen. Select Settings > System > Units.

OFF: Press OFF to turn the fan on or off. When OFF is selected, the system stops air from flowing into the cabin. If ON is selected or any other buttons are pressed, the climate control system will turn on and operate at the current setting.

∧ / ∨ : The temperature can be adjusted separately for the driver and the passenger. Press to decrease or lift to increase the temperature. Press or lift and hold to rapidly increase or decrease the temperature. Press SYNC on the Climate Display to reset the Passenger Temperature to the Driver Temperature.

Rear Climate: If equipped, touch the rear climate selection on the infotainment screen to open the rear climate control screen. The rear climate control settings can now be adjusted from the front passenger area.

Manual Operation

∨ ∧ : Press to decrease or lift to increase the fan speed. Press or lift and hold the fan controls to adjust speed more quickly. The fan speed setting displays. Any adjustment of the fan speed cancels automatic fan control and the fan can be controlled manually. Press AUTO to return to automatic operation.

To turn off the fan and climate control system, press OFF on the center stack climate controls. The airflow will be blocked from entering in all air delivery modes, except defrost.

The maximum automatic fan speed can be set to low, medium, or high. To adjust Auto Fan Speed, select Settings > Climate and Air Quality > Auto Fan Speed.

Air Delivery Mode Control: When the climate information is displayed, press the desired air delivery mode on the climate control display to change the direction of the airflow. The selected air delivery mode button is lit. Pressing any of the air delivery buttons cancels automatic air delivery control and the direction of the airflow can be controlled manually. Press AUTO to return to automatic operation.

To change the current mode, select one or more of the following:

: Air is directed to the windshield, outboard A/C outlets, and side window outlets.

: Air is directed to the instrument panel outlets.

: Air is directed to the floor outlets.

HEAT : Touch to turn the automatic heater on or off. An indicator light comes on to show that the heater is enabled. If the fan is turned off, the heater will not run. Press AUTO to return to automatic operation.

MAX **:** Clears the windshield of fog or frost more quickly. Air is directed to the windshield. Press MAX to turn on or off. Changing the air delivery mode also turns the defrost off.

A/C: Touch A/C to turn the automatic air conditioning on or off. If the fan is turned off, the air conditioner will not run.

Press AUTO to return to automatic operation and the air conditioner runs as needed.

: Press to alternate between recirculating air inside the vehicle or pulling in outside air. The indicator light on the button is lit when recirculation mode is active. This helps to quickly cool the air inside the vehicle and reduce the entry of outside air and odors.

Pressing this button cancels automatic recirculation. Press AUTO to return to automatic operation; recirculation runs automatically as needed.

Manual recirculation mode is not available when in Defrost.

The climate control system uses a sensor to automatically detect high humidity inside the vehicle. When high humidity is detected, the climate control system may adjust to outside air supply, turn on the heater and air conditioner, increase fan and temperature, and direct more air to the windshield. When the climate control system does not detect possible window fogging, it returns to normal operation. To turn Auto Defog off or on, select Settings > Climate and Air Quality > Auto Defog > Select ON or OFF. If Auto Defog is turned off, or fogging does not clear quickly enough, select MAX to more quickly clear the windshield.

Rear Window Defogger

Caution

Do not try to clear frost or other material from the inside of the front windshield and rear window with a razor blade or anything else that is sharp. This may damage the rear window defogger grid and affect the

(Continued)

Caution (Continued)

radio's ability to pick up stations clearly. The repairs would not be covered by the vehicle warranty.

REAR **:** Press to turn the rear window defogger on or off. An indicator light on the button comes on to show that the rear window defogger is on.

The rear window defogger only works when the vehicle is on.

The rear window defogger can be set to automatic operation. When Auto Rear Defog is selected, the rear window defogger turns on automatically when the vehicle is first started in cold weather and turns off when the vehicle is warmed. To turn Auto Rear Defog off or on, select Settings > Climate and Air Quality > Auto Rear Defog > Select ON or OFF.

The heated outside rearview mirrors turn on when the rear window defogger button is on and help to clear fog or frost from the surface of the mirrors.

If the vehicle is equipped with heated wiper parking, the feature will turn on when the rear window defogger button is on and help to clear frost from the wipers. See *Windshield Wiper/Washer* ⇨ *87*.

Sensor

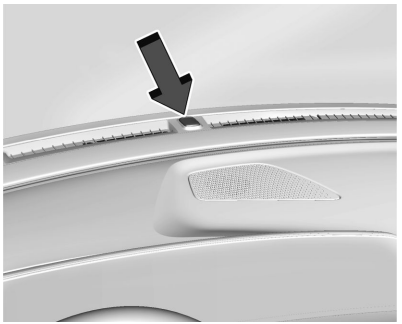

The solar sensor, on top of the instrument panel near the windshield, monitors the solar heat.

The climate control system uses the sensor information to adjust the temperature, fan speed, recirculation, and air delivery mode for best comfort.

If the sensor is covered, the automatic climate control system may not work properly.

Remote Start Climate Control Operation: The climate control system may run when the vehicle is started remotely. The system uses the driver's previous settings to heat or cool the inside of the vehicle. The rear defog may come on during remote start based on cold ambient conditions. The rear defog indicator light does not come on during a remote start. If equipped with heated or cooled seats, they may come on during a remote start. See *Remote Start* ⇨ *13* and *Heated and Ventilated Front Seats* ⇨ *41*.

Afterblow Feature

If equipped, under certain conditions, the fan may stay on or may turn on and off several times after you turn off and lock the vehicle. This is normal.

Rear Climate Control System

If equipped, the rear climate control system is on the rear of the center console.

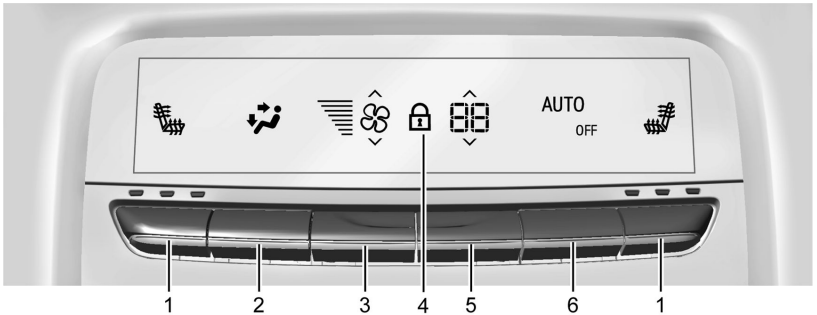

1. Rear Seat Passenger Heated Seat Controls
2. Air Delivery Mode Control
3. Fan Control
4. Rear Climate Lock
5. Rear Climate Temperature Control
6. AUTO (Automatic Operation)

The fan, air delivery mode, air conditioning and temperature settings can be controlled by selecting CLIMATE on the infotainment app screen or selecting the climate button in the climate control display.

Automatic Operation

AUTO: Press to turn on or off. The air delivery is controlled automatically to adjust temperature to the desired setting. The AUTO indicator appears on the display. If the air delivery mode or fan speed is manually adjusted, this cancels full automatic operation.

Manual Operation

: Press the rear fan control up or down to increase or decrease the airflow to the rear panel outlets.

Temperature Controls: Press up or down to adjust the rear passenger temperature.

Air Delivery Mode Control: Press up or down to select the desired air delivery mode.

ECO Climate

When ECO Climate is on, airflow to unoccupied rear seats will be reduced to save energy. To turn ECO Climate off or on, select Settings > Vehicle > Climate and Air Quality > ECO Climate.

Air Vents

Use the multi-function joystick control on the front center and side air vents to change the direction of the airflow.

Air vents blow warm air on the side windows in cold weather. If floor, defog, or defrost modes are selected, a small amount of air will come from the vents close to the window.

- To fully open the front A/C vents, turn the multi-function joystick control knob until the indicator points straight up.
- To close the front A/C vents, turn the multi-function joystick control until the indicator points to the nine o'clock position.

- To close the rear A/C vents, move the sliding knobs to the full inboard position.

Operation Tips

- Clear away any ice, snow, or leaves from air inlets at the base of the windshield that could block the flow of air into the vehicle.
- Clear any snow off the hood to improve visibility and help decrease moisture drawn into the vehicle.
- Keep the path under the front seats clear of objects to help circulate the air inside of the vehicle more effectively.
- Use of non-GM approved hood deflectors can adversely affect the performance of the system. Check with your dealer before adding equipment to the outside of the vehicle.
- Do not attach any devices to the air vent slats. This will restrict airflow and may cause damage to the air vents.

Maintenance

Passenger Compartment Air Filter

The filter reduces the dust, pollen, and other airborne irritants from outside air that is pulled into the vehicle.

The filter should be replaced as part of routine scheduled maintenance.

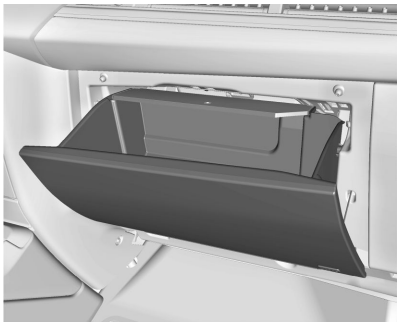

1. Open the glove box door completely.

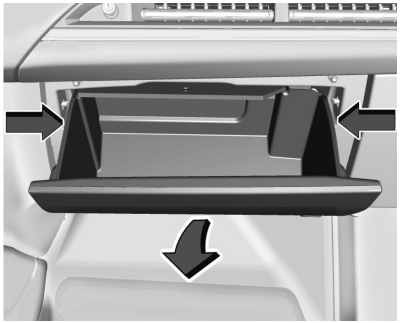

2. Press the sides of the glove box bin inward to clear the stoppers and turn downward to lower the bin.



3. Unhook the string dampener to fully remove the glove box bin.

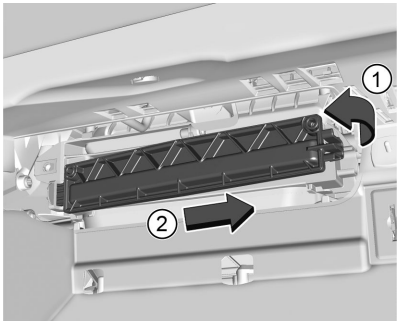

4. Release the clip (1) on the right side of the filter door and slide right (2), then remove the door. Remove the old filter.
5. Install the new air filter.
6. Reinstall the filter door.
7. Reverse the steps to reinstall the glove box.

See your dealer if additional assistance is needed.

Service

All vehicles have a label underhood that identifies the refrigerant used in the vehicle. The refrigerant system should only be serviced by trained and certified technicians. The air conditioning evaporator should never be repaired or replaced by one from a salvage vehicle. It should only be replaced by a new evaporator to ensure proper and safe operation.

During service, all refrigerants should be reclaimed with proper equipment. Venting refrigerants directly to the atmosphere is harmful to the environment and may also create unsafe conditions based on inhalation, combustion, frostbite, or other health-based concerns.

Driving and Operating

Driving Information
- Driving for Better Energy Efficiency 170
- Distracted Driving 171
- Defensive Driving 172
- Impaired Driving 172
- Control of a Vehicle 172
- Braking 172
- Steering 173
- Off-Road Recovery 173
- Loss of Control 174
- Driving on Wet Roads 174
- Hill and Mountain Roads 175
- Winter Driving 176
- If the Vehicle Is Stuck 177
- Vehicle Load Limits 177

Starting and Operating
- New Vehicle Break-In 181
- Power Modes 181

Electric Drive Unit
- Electric Drive Unit 183
- One-Pedal Driving 186

Drive Systems
- All-Wheel Drive 187

Brakes
- Electric Brake Boost 187
- Antilock Brake System (ABS) 187
- Electric Parking Brake 187
- Brake Assist 189
- Post-Collision Braking (Secondary Collision Mitigation Braking) 189
- Hill Start Assist (HSA) 189
- Automatic Vehicle Hold (AVH) 189
- Regenerative Braking 190

Ride Control Systems
- Traction Control/Electronic Stability Control 191
- Driver Mode Control 192

Cruise Control
- Adaptive Cruise Control (Advanced) 195
- Hands-On Steering Assist (Lane Centering Assistance) 206
- Super Cruise 217

Advanced Driver Assistance Systems
- Advanced Driver Assistance Systems 234
- Assistance Systems for Parking or Backing 235
- Rear Vision Camera (RVC) 235
- Surround Vision System 236
- Park Assist 238
- Automatic Parking Assist (APA) 239
- Reverse Automatic Braking (RAB) 241
- Rear Pedestrian Alert 242
- Rear Cross Traffic Alert (RCTA) System 243
- Assistance Systems for Driving 245
- Forward Collision Alert (FCA) System 245
- Automatic Emergency Braking (AEB) 247
- Front Pedestrian Braking (FPB) System 251
- Lane Change Alert (LCA) 253
- Blind Zone Steering Assist (BZSA) 255
- Traffic Sign Assistant 255
- Driver Attention Assist 257
- Lane Keep Assist (LKA) 258
- Surround Vision Recorder 260

Charging
- When to Charge 260
- Plug-In Charging 261
- AC Charging 262
- DC Charging 264
- Delayed Charging Override 266
- Charging Status Feedback 266
- Charge Cord 270
- Installing and Operating the Charge Cord 273
- Charge Cord Troubleshooting and Maintenance 277
- Utility Interruption of Charging 278
- Electrical Requirements for Battery Charging 278

Trailer Towing
- General Towing Information 279

Conversions and Add-Ons
Add-On Electrical Equipment 279

Driving Information

Driving for Better Energy Efficiency

Use the tips in the categories below to help maximize energy efficiency and range.

In colder temperatures, while these efficiency tips will help, the EV range will be lower due to higher energy usage including energy spent heating the cabin.

The Energy Info feature available on the Vehicle Status app estimates the influence of the main factors impacting vehicle range. It displays how energy is being used for the current drive since the last time the vehicle was started and over a recently driven distance. See *Vehicle Status* ⇨ *114*.

Acceleration, Braking, and Coasting

Avoid rapid accelerations and decelerations.

Use cruise control when appropriate.

Plan ahead for decelerations, and coast whenever possible. Do not rush to traffic signals, and do not shift to N (Neutral) to coast.

Use the One-Pedal Driving feature when appropriate to help recover energy during coasting and braking. One-Pedal mode recovers more energy while coasting and braking than D (Drive) mode. See *One-Pedal Driving* ⇨ *186*.

Use the Regen on Demand feature during deceleration to help recover energy. See *Regenerative Braking* ⇨ *190*.

Terrain and Vehicle Speed

Higher speeds and grade changes use more energy and can significantly reduce electric range.

Managing the Interior Temperature

Climate Settings

Using the heat and air conditioning systems decreases the energy available for electric driving. Optimal energy efficiency is achieved when the heat, air conditioning, and fan are turned off.

Use the heated and ventilated seat features (if equipped) instead of the climate control system. Heating and ventilating the seat uses less energy than heating and cooling the interior. See *Heated and Ventilated Front Seats* ⇨ *41* and *Heated Rear Seats* ⇨ *45*.

Use the Remote Start Climate Control feature to heat or cool the interior while the vehicle is plugged in to use electricity from the electrical outlet instead of using energy from the battery. See *Remote Start* ⇨ *13*.

On colder days, it is best to plug in the vehicle overnight, and then remote start the vehicle.

Use the Battery Gauge on the Instrument Cluster to view the effect of climate control settings on your estimated range. See *Battery Gauge (High Voltage)* ⇨ *95*.

Other Ways to Affect Cabin Temperature

In hot weather, avoid parking in direct sunlight. Use sunshades inside the vehicle.

Keep the inside of the windows clean to reduce fogging. Turn off the front defroster and rear defogger when they are not needed.

Avoid driving with the windows open at highway speeds.

Vehicle Charging and Maintenance

Charging

Keep the vehicle plugged in, even when fully charged, to keep the battery temperature ready for the next drive. This is important when outside temperatures are extremely hot or cold.

If possible, use a 240–volt high power charge station for best results. This allows the interior of the vehicle and high voltage battery to warm to optimal temperature.

Allow the vehicle to warm up for 20 minutes before driving. This helps to optimize the high voltage battery temperature before driving.

Maintenance

Always keep the tires properly inflated and the vehicle properly aligned.

Avoid unnecessary use of electrical accessories. Power used for functions other than propelling the vehicle will reduce the available range.

Cargo Weight

The weight of excess cargo in the vehicle affects efficiency and range. Avoid carrying more than is needed.

Using a rooftop carrier will reduce efficiency due to additional weight and drag.

Distracted Driving

⚠ Warning

Taking your eyes off the road too long or too often could cause a crash resulting in injury or death. Focus your attention on driving.

Distraction comes in many forms and can take your focus from driving. Exercise good judgment when engaging with vehicle functions. Limit activities that may divert attention away from the road. Many local governments have enacted laws regarding driver distraction. Become familiar with the local laws in your area.

To avoid distracted driving, keep your eyes on the road, keep your hands on the steering wheel, and focus your attention on driving.

- Do not use a phone in demanding driving situations. Use a hands-free method to place or receive necessary phone calls.
- Watch the road. Do not read, take notes, or look up information on phones or other electronic devices.

- Designate a front seat passenger, if possible, to handle potential distractions.
- Become familiar with vehicle features before driving, such as programming favorite radio stations and adjusting climate control and seat settings.
- Program all trip information into any navigation device prior to driving.
- Wait until parked to retrieve items that have fallen to the floor.
- Stop or park the vehicle to tend to children.
- Keep pets in an appropriate carrier or restraint.
- Avoid stressful conversations while driving, whether with a passenger or on a cell phone.

Refer to the infotainment section for more information on using that system and the navigation system, if equipped, including pairing and using a cell phone.

Defensive Driving

Defensive driving means to always expect the unexpected. The first step in driving defensively is to wear a seat belt. See *Seat Belts* ⇨ *45*.

- Assume that other road users (pedestrians, bicyclists, and other drivers) are going to be careless and make mistakes. Anticipate what they may do and be ready.
- Allow enough following distance between your vehicle and the vehicle in front of you.
- Focus on the task of driving.

Impaired Driving

⚠ Warning

Drinking alcohol or taking drugs and then driving is very dangerous. Your reflexes, perceptions, attentiveness, and judgment can be affected by even a small amount of alcohol or drugs. You can have a serious — or even fatal — collision if you drive after drinking or taking drugs.

(Continued)

Warning (Continued)

Do not drive while under the influence of alcohol or drugs, or ride with a driver who has been drinking or is impaired by drugs. Find alternate transportation home; or if you are with a group, designate a driver who will remain sober.

Death and injury associated with impaired driving is a global tragedy.

Control of a Vehicle

Braking, steering, and accelerating are important factors in helping to control a vehicle while driving.

Braking

Braking action involves perception time and reaction time. Deciding to push the brake pedal is perception time. Actually doing it is reaction time.

Average driver reaction time is about three-quarters of a second. In that time, a vehicle moving at 100 km/h (60 mph) travels 20 m (66 ft) and may not have enough time to stop in an emergency.

Tips for stopping safely include:

- Keep a safe following distance from the vehicle in front of you.
- Avoid needless heavy braking.
- Keep pace with traffic.

If a brake fault occurs, the brakes may lose power assist. Without power assist, the brake pedal will be harder to push, and it can take longer to stop the vehicle.

If the vehicle loses propulsion power while driving, the electric brake boost system, which is powered by the 12-volt vehicle battery, maintains the power assist for as long as the battery has sufficient voltage. Steer the vehicle out of the roadway and stop as soon as it is safe to do so. See *Electric Brake Boost* ⇨ *187*.

Steering

Caution

To avoid damage to the steering system, do not drive over curbs, parking barriers, or similar objects at speeds greater than 3 km/h (1 mph). Use care when driving

(Continued)

Caution (Continued)

over other objects such as lane dividers and speed bumps. Damage caused by misuse of the vehicle is not covered by the vehicle warranty.

Electric Power Steering

The vehicle has an electric power steering system, which reduces the effort needed to steer. It does not have power steering fluid. The system does not require regular maintenance.

If the vehicle experiences a system malfunction and loses power steering, it may require greater steering effort. Turning the steering wheel as far as it can go and holding it there with force for an extended period may also reduce power steering assist.

See your dealer if there is a problem with the electric power steering system.

Curve Tips

- Reduce your speed before entering a curve.
- Take and maintain a safe and controlled speed through curves.
- Wait until the vehicle is out of the curve before gently accelerating into the straightaway.

Steering in Emergencies

- In some situations, steering around a problem may be more effective than braking.
- You can hold both sides of the steering wheel to turn 180 degrees without removing a hand.
- The Antilock Brake System (ABS) allows steering while braking.

Off-Road Recovery

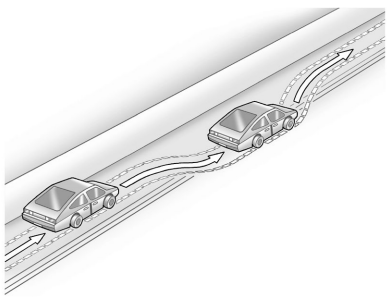

The vehicle's right wheels can drop off the edge of a road onto the shoulder while driving. Follow these tips:

1. Ease off the accelerator and then, if there is nothing in the way, steer the vehicle so that it straddles the edge of the pavement.
2. Turn the steering wheel about one-eighth of a turn, until the right front tire contacts the pavement edge.
3. Turn the steering wheel to go straight down the roadway.

Loss of Control

Skidding

There are three types of skids that correspond to the vehicle's three control systems:

Braking Skid: Wheels are not rolling.

Steering or Cornering Skid : Too much speed or steering in a curve causes tires to slip and lose cornering force.

Acceleration Skid : Too much throttle causes the driving wheels to spin.

Antilock brakes help to avoid only the braking skid.

Defensive drivers avoid most skids by taking reasonable care suited to existing conditions, and by not exceeding those conditions. But skids are always possible.

If the vehicle starts to skid, follow these suggestions:

- Ease your foot off the accelerator pedal and steer the way you want the vehicle to go. The vehicle may straighten out, but if it skids again from oversteer, be ready to correct another skid if it occurs.
- Slow down and adjust your driving according to weather conditions. Stopping distance may be longer and vehicle control may be affected when traction is reduced by water, snow, ice, gravel, or other material on the road. Learn to recognize warning clues — such as enough water, ice, or packed snow on the road to make a mirrored surface — and slow down when you have any doubt.
- Try to avoid sudden steering, acceleration, or braking, including reducing vehicle speed by shifting to a lower gear. Any sudden changes could cause the tires to slide.

Driving on Wet Roads

⚠ Warning

Wet brakes can cause crashes. They might not work as well in a quick stop and could cause pulling to one side. You could lose control of the vehicle.

After driving through a large puddle of water or a car/vehicle wash, lightly apply the brake pedal until the brakes work normally.

Flowing or rushing water creates strong forces. Driving through flowing water could cause the vehicle to be carried away. If this happens, you and other vehicle occupants could drown. Do not ignore police warnings and be very cautious about trying to drive through flowing water.

Rain and wet roads can reduce traction and affect your ability to stop and accelerate. Always drive slower in these driving conditions and avoid driving through large puddles and deep-standing or flowing water.

Hydroplaning

Warning

Hydroplaning can cause a loss of steering ability, leading to a crash. Slow down and follow these other instructions to help avoid hydroplaning on wet roads.

Hydroplaning can occur on wet roads if water builds up under the tires, causing them to have little to no contact with the road.

Rainy Weather Tips

Besides slowing down, other wet weather driving tips include:

- Allow extra following distance.
- Pass with caution.
- Keep windshield wiping equipment in good condition.
- Fill the windshield washer fluid reservoir.
- Maintain proper tire pressure and tread depth. See *Tires* ⇨ *305*.
- Turn off any cruise control system, if equipped. See *Adaptive Cruise Control (Advanced)* ⇨ *195* or *Super Cruise* ⇨ *217*.
- Turn off One-Pedal Driving mode. See *One-Pedal Driving* ⇨ *186*.
- Activate All-Wheel Drive mode, if equipped. See *Driver Mode Control* ⇨ *192*.
- Turn on the Traction Control System and StabiliTrak/Electronic Stability Control. See *Traction Control/Electronic Stability Control* ⇨ *191*.

Hill and Mountain Roads

Warning

Do not charge your vehicle's battery above an 80% charge if you are going to drive down long, steep grades such as mountain passes. This provides room in the battery for regenerative braking to supplement your conventional brakes during the descent. This is especially important when towing a trailer, which puts additional stress on your vehicle's braking system.

(Continued)

Warning (Continued)

If the battery becomes full, regenerative braking will be limited or unavailable. The brakes will have to do all the work of slowing down the vehicle and could become too hot. Hot brakes may not be able to slow the vehicle enough to maintain speed and control. To help avoid the risk of a crash, limit the battery's charge and, if you experience brake fade or receive a brake warning, stop the vehicle and allow the brakes to cool.

See "Charge Now" under *Charging* ⇨ *107* for information on setting charge limits.

Driving on steep hills or through mountains is different than driving on flat or rolling terrain. Be sure to:

- Use regenerative braking to help slow the vehicle or maintain speed by keeping the vehicle in gear and limiting the initial battery charge to 80% or less. See *Regenerative Braking* ⇨ *190*.

- When braking is necessary, use frequent, light taps of the brake pedal. This maximizes regenerative braking and minimizes the load on the vehicle brake system.
- Keep the vehicle serviced and in good shape.
- Check all fluid levels, brakes, tires, and cooling system.
- Drive at speeds that keep the vehicle in its own lane. Do not swing wide or cross the center line.
- Be alert on top of hills; something could be in your lane (e.g., stalled car, crash).
- Pay attention to special road signs (e.g., falling rocks area, winding roads, long grades, passing or no-passing zones) and take appropriate action.

Winter Driving

Driving on Snow or Ice

Caution
To avoid damage to the wheels and brake components, always clear snow and ice from inside the wheels and underneath the vehicle before driving.

Snow or ice between the tires and the road causes less traction or grip, so drive carefully. Wet ice can occur at about 0 °C (32 °F) when freezing rain begins to fall. Avoid driving on wet ice or in freezing rain until the roads are treated.

For Slippery Road Driving:

- Accelerate gently. Accelerating too quickly causes the wheels to spin and makes the surface under the tires slick.
- If enabled, turn off One-Pedal Driving. See *One-Pedal Driving* ⇨ *186*.
- If turned off, turn on the Traction Control and the Electronic Stability Control systems. See *Traction Control/Electronic Stability Control* ⇨ *191*.
- Select the Snow/Ice driver mode. See *Driver Mode Control* ⇨ *192*.
- Apply the brakes sooner than you would on dry pavement. The Antilock Brake System (ABS) improves vehicle stability during hard stops. See *Antilock Brake System (ABS)* ⇨ *187*.
- Avoid using the Regen on Demand paddle. See *Regenerative Braking* ⇨ *190*.
- Allow greater following distance and watch for slippery spots. Icy patches can occur on otherwise clear roads in shaded areas. The surface of a curve or an overpass can remain icy when the surrounding roads are clear. Avoid sudden steering maneuvers and braking while on ice.
- Turn off cruise control.

Blizzard Conditions

Stop the vehicle in a safe place and signal for help. Stay with the vehicle unless there is help nearby. If possible, use Roadside Assistance. See *Roadside Assistance Program* ⇨ *352*. To get help and keep everyone in the vehicle safe:

- Turn on the hazard warning flashers.
- Tie a red cloth to an outside mirror.

To conserve battery energy while waiting for help, run the vehicle for only short periods as needed to warm the vehicle and then shut the vehicle off and partially close the window. Moving about to keep warm also helps. For additional tips to help conserve battery energy in cold weather, see *Driving for Better Energy Efficiency* ⇨ *170*.

If the Vehicle Is Stuck

Slowly and cautiously spin the wheels to free the vehicle when stuck in sand, mud, ice, or snow.

The traction control system can often help to free a stuck vehicle. See *Traction Control/ Electronic Stability Control* ⇨ *191*. If you cannot free the vehicle with traction control enabled, try "rocking" the vehicle as described below.

Rocking the Vehicle to Get It Out

⚠ Warning

If the vehicle's tires spin at high speed, they can explode, and you or others could be injured. Spin the wheels as little as possible and avoid going above 56 km/h (35 mph).

Turn the steering wheel left and right to clear the area around the front wheels. Turn off traction control. Shift back and forth between R (Reverse) and D (Drive), spinning the wheels as little as possible. To prevent electric drive unit wear, wait until the wheels stop spinning before shifting gears. Slowly spinning the wheels in the forward and reverse directions causes a rocking motion that could free the vehicle. If the vehicle does not move after a few attempts, it may need towing. See *Transporting a Disabled Vehicle* ⇨ *328*.

Vehicle Load Limits

⚠ Warning

Do not load the vehicle any heavier than the Gross Vehicle Weight Rating (GVWR), or either the maximum front or rear Gross Axle Weight Rating (GAWR). This can cause systems to break and change the way the vehicle handles. This could cause loss of control and a crash. Overloading can also

(Continued)

Warning (Continued)

reduce stopping performance, damage the tires, and shorten the life of the vehicle.

It is very important to know how much weight the vehicle can carry. This weight is called the vehicle capacity weight and includes the weight of all occupants, cargo, and all non-factory-installed options. Two labels on the vehicle may show how much weight it may properly carry, the Tire and Loading Information label and the Certification/Tire label.

Tire and Loading Information Label

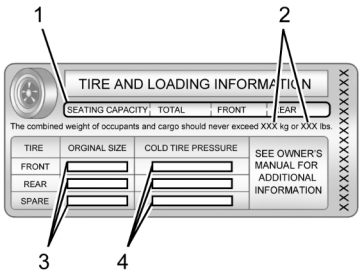

Example Label

A vehicle-specific Tire and Loading Information label is attached to the center pillar (B-pillar). The tire and loading information label shows the number of occupant seating positions (1), and the maximum vehicle capacity weight (2) in kilograms and pounds.

The Tire and Loading Information label also shows the size of the original equipment tires (3) and the recommended cold tire inflation pressures (4). For more information on tires and inflation see *Tires* ⇨ *305* and *Tire Pressure* ⇨ *311*.

There is also important loading information on the vehicle Certification/ Tire label. It may show the Gross Vehicle Weight Rating (GVWR) and the Gross Axle Weight Rating (GAWR) for the front and rear axle. See "Certification/Tire Label" later in this section.

Steps for Determining Correct Load Limit

1. Locate the statement "The combined weight of occupants and cargo should never exceed XXX kg or XXX lbs." on your vehicle's placard.
2. Determine the combined weight of the driver and passengers that will be riding in your vehicle.
3. Subtract the combined weight of the driver and passengers from XXX kg or XXX lbs.
4. The resulting figure equals the available amount of cargo and luggage load capacity. For example, if the "XXX" amount equals 1400 lbs. and there will be five 150 lb passengers in your vehicle, the amount of available cargo and luggage load capacity is 650 lbs. (1400-750 (5 x 150) = 650 lbs.)
5. Determine the combined weight of luggage and cargo being loaded on the vehicle. That weight may not safely exceed the available cargo and luggage load capacity calculated in Step 4.
6. If your vehicle will be towing a trailer, load from your trailer will be transferred to your vehicle. Consult this manual to determine how this reduces the available cargo and luggage load capacity of your vehicle.

See *General Towing Information* ⇨ *279* for important information on towing a trailer, towing safety rules and trailering tips.

If aftermarket accessories are installed on the vehicle, for example a rooftop carrier, be sure to add the weight of all installed accessories to the combined weight of luggage and cargo.

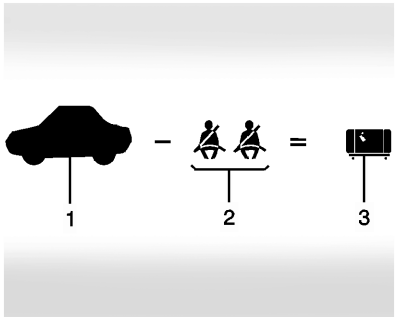

Example 1

1. Vehicle Capacity Weight for Example 1 = 453 kg (1,000 lb)

   Then subtract Accessory Weight, for example a rooftop cargo box = 15.8 kg (35 lb)
2. Subtract Occupant Weight @ 68 kg (150 lb) × 2 = 136 kg (300 lb)
3. Remaining available capacity for Cargo Weight = 301.2 kg (665 lb)

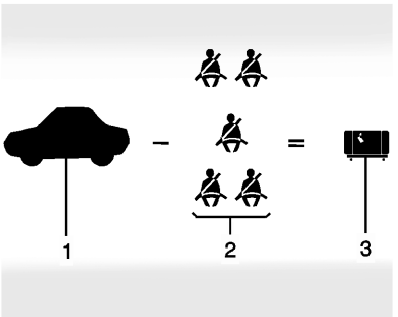

Example 2

1. Vehicle Capacity Weight for Example 2 = 453 kg (1,000 lb)

   Then subtract Accessory Weight, for example a rooftop cargo box = 18.1 kg (40 lb)
2. Subtract Occupant Weight @ 68 kg (150 lb) × 5 = 340 kg (750 lb)
3. Remaining available capacity for Cargo Weight = 94.9 kg (210 lb)

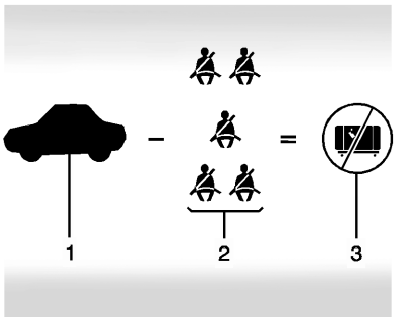

Example 3

1. Vehicle Capacity Weight for Example 3 = 453 kg (1,000 lb)
2. Subtract Occupant Weight @ 91 kg (200 lb) × 5 = 453 kg (1,000 lb)
3. Available Cargo Weight = 0 kg (0 lb)

Refer to the Tire and Loading Information label for specific information about the vehicle's capacity weight and seating positions. The combined weight of the driver, passengers, accessories, and cargo should never exceed the vehicle's capacity weight.

Certification/Tire Label

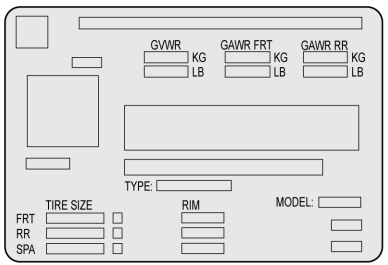

Label Example

A vehicle-specific Certification/Tire label is attached to the center pillar (B-pillar).

The label may show the size of the vehicle's original tires and the inflation pressures needed to obtain the gross weight capacity of the vehicle. The label shows the gross weight capacity of the vehicle. This is called the Gross Vehicle Weight Rating (GVWR). The GVWR includes the weight of the vehicle, all occupants, and cargo.

The Certification/Tire label may also show the maximum weights for the front and rear axles, called the Gross Axle Weight Rating (GAWR). To find out the actual loads on the front and rear axles, weigh the vehicle at a weigh station. Your dealer can help with this. Be sure to spread the load equally on both sides of the centerline.

How to Load a Vehicle Safely

Caution

Overloading the vehicle may cause damage. Repairs would not be covered by the vehicle warranty. Do not overload the vehicle.

⚠ Warning

Things inside the vehicle can strike and injure people in a sudden stop or turn, or in a crash.

(Continued)

Warning (Continued)

- Put things in the cargo area of the vehicle. In the cargo area, put them as far forward as possible. Try to spread the weight evenly.
- Never stack heavier things, like suitcases, inside the vehicle so that some of them are above the tops of the seats.
- Do not leave an unsecured child restraint in the vehicle.
- Secure loose items in the vehicle.
- Do not leave a seat folded down unless needed.

Starting and Operating

New Vehicle Break-In

Caution
Avoid making hard stops for the first 322 km (200 mi). During this time the new brake linings are not yet broken in. Hard stops with new linings can mean premature wear and earlier replacement. Follow this breaking-in guideline every time you get new brake linings. Following break-in, vehicle speed and load can be gradually increased.

Power Modes

Powering On

This vehicle is equipped with Hands-Free Start, which automatically starts the vehicle when you enter with a remote key, press the brake, or close the driver door.

If a remote key was left in the vehicle after the last power cycle, closing the driver door will not turn on the vehicle. The brake pedal must be pressed to turn the vehicle on. Driver Information Center messages will display explaining how to turn on the vehicle.

If the remote key is not in the vehicle or something is interfering with the remote key, a message displays in the Driver Information Center.

If the vehicle does not turn on due to a low remote key battery, the vehicle can still be driven. See *Remote Key Operation* ⇨ *8*.



A vehicle ready light displays in the lower instrument cluster when the vehicle is ready to be driven. This could take up to 15 seconds at extremely cold temperatures.

The instrument cluster also displays an active battery gauge when the vehicle is ready to be driven.

A chime will sound if the driver door is opened while the vehicle is on.

Powering Off

⚠ Warning
Turning off the vehicle while moving may disable the airbags. While driving, only shut the propulsion system off in an emergency.

When the drive cycle has been completed and the vehicle is shifted to P (Park), the vehicle will turn off when a driver exit is detected. The vehicle can also be turned off by pressing OFF on the infotainment display.

Retained Accessory Power (RAP) will remain active until the driver door is opened.

If the vehicle has not been shifted out of P (Park), it will not turn off based on driver exit detection and will need to be turned off through OFF or waiting for the automatic shutdown timeout.

If the vehicle must be shut off in an emergency:

1. Brake using firm and steady pressure. Do not pump the brakes repeatedly. This may deplete power assist, requiring increased brake pedal force.

2. Shift the vehicle to N (Neutral). This can be done while the vehicle is moving. After shifting to N (Neutral), firmly apply the brakes and steer the vehicle to a safe location.
3. Come to a complete stop, shift to P (Park), and turn the vehicle off.
4. Set the parking brake. See *Electric Parking Brake* ⇨ *187*.

If a drive mode is entered where OFF is present while moving, the vehicle can be shut off while driving. Press OFF and follow the instructions displayed in the Driver Information Center to confirm that vehicle off mode is desired.

Climate control functions, such as defrost, heating, and air conditioning are only available while the vehicle is powered on. Turning the vehicle off will turn off all climate controls.

If a collision is detected an additional emergency vehicle off display will be shown and can be pressed to turn the vehicle off.

Keeping Vehicle On After Driver Exit

⚠ Warning

It is dangerous to get out of the vehicle if the P (Park) button is not pressed with the parking brake set. The vehicle can roll.

Do not leave the vehicle when the propulsion system is running. If you have left the propulsion system running, the vehicle can move suddenly. You or others could be injured. To be sure the vehicle will not move, even when you are on fairly level ground, always set the parking brake and press the P (Park) button.

Press on the infotainment display to keep the vehicle on after a driver exit is detected. needs to be selected each time the vehicle is shifted to P (Park) to be active. The vehicle will remain on for a set time displayed in a notification upon activation. can be reselected to restart the time interval.

Before exiting the vehicle, press the P (Park) button and the parking brake switch, then activate . See *Electric Drive Unit* ⇨ *183*.

Using will reduce the charge level of the high voltage battery. Ensure your battery has sufficient charge before activating . See *Battery Gauge (High Voltage)* ⇨ *95*.

should only be used when the vehicle is attended. A horn chirp will sound if the vehicle turns off during the set time interval.

Service Mode

Caution

Placing the vehicle in Service Mode will use the 12-volt battery. Do not use Service Mode for an extended period, or the vehicle may not start.

This mode is available for service and diagnostics, and to verify the proper operation of the service vehicle soon light as may be required for inspection or maintenance purposes.

To place the vehicle in Service Mode:

1. Ensure the vehicle is off, the driver door is open, and the brake pedal is not applied.

2. Press and release the accelerator pedal three times within five seconds, keeping the accelerator pressed on the third time.

The instrument cluster and infotainment systems will operate normally, but the vehicle will not be able to be driven. The propulsion system will not be active in Service Mode. Press the brake pedal to turn the vehicle on or press OFF on the infotainment display to turn the vehicle off.

Electric Drive Unit

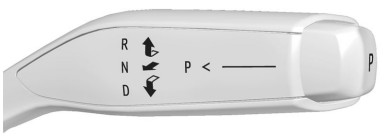

Electric Drive Unit Shift Pattern

- The shift pattern is displayed on the front of the shift lever.
- The selected gear position will illuminate red, while others are displayed in white.
- In frigid conditions, the indicator may blink until fully engaged.

Shifter Positions

P (Park): Use this position when starting the vehicle to ensure the vehicle does not move. This position locks the drive wheels.

R (Reverse): Use this gear position to back up.

N (Neutral): In this gear position, the drive unit does not connect with the wheels. To restart the propulsion system when the vehicle is already moving, use N (Neutral) only.

D (Drive): Use this gear position for normal driving.

Shifting Into Gear Positions

⚠ Warning

It is dangerous to get out of the vehicle if the P (Park) button is not pressed with the parking brake set. The vehicle can roll.

Do not leave the vehicle when the propulsion system is running. If you have left the propulsion system running, the vehicle can move suddenly. You or others could be injured. To be sure the vehicle will

(Continued)

Warning (Continued)

not move, even when you are on fairly level ground, always set the parking brake and press the P (Park) button.

1. Verify that the vehicle ready light is on.
2. Apply the brake pedal.
3. Move the shift lever to the desired position.

   After releasing the shift lever, it will return to the center position.

   The P indicator will turn white and the selected gear indicator on the shift lever will turn red when the vehicle is no longer in P (Park).

If you cannot shift out of P (Park), check the Driver Information Center for an issue message. If you have followed Steps 1–3 as directed and your vehicle will still not shift out of P (Park), see your dealer for service.

Shifting Into Park

⚠ Warning

Parking on grades with poor traction such as ice, snow, mud, or gravel may cause the vehicle to unintentionally move and could result in injury, death, and/or vehicle damage. Be sure to apply the parking brake. See *Electric Parking Brake* ⇨ *187*.

1. Apply the brake pedal and set the parking brake. See *Electric Parking Brake* ⇨ *187*.
2. Press the P (Park) button at the end of the shift lever.
3. The P indicator on the shift lever will turn red when the vehicle is in P (Park).

When the vehicle is stopped, press OFF to turn off the vehicle. The vehicle will shift to P (Park) automatically unless the vehicle is in N (Neutral). See "Car Wash Mode" later in this section.

If the vehicle is shifted into P (Park) on a hill, the parking brake may apply automatically. The driver might not be able to release the parking brake using the parking brake switch; however, it should automatically release when the vehicle is shifted out of P (Park).

If OFF is pressed while at relatively high speed, instructions will display on the Driver Information Center to confirm that vehicle off mode is desired. Once confirmed, the vehicle will turn off and automatically shift to N (Neutral). When the vehicle is stopped, P (Park) can be selected

If the vehicle must be left with the propulsion system on, be sure that the vehicle is in P (Park) with the parking brake set, before leaving the vehicle. After pressing the P (Park) button, hold down the regular brake pedal. If you cannot see the P (Park) indicator in the instrument cluster, it means that the vehicle has not shifted to P (Park).

Service Shift Lever Message

A SERVICE SHIFTER SEE OWNER'S MANUAL message indicates an issue with the shift lever. If this message is a result of the vehicle automatically shifting into P (Park) and you need to move your vehicle to a safe location, try holding the shift lever in D (Drive) or R (Reverse) until the speed exceeds 16 km/h (10 mph). Have the vehicle serviced as soon as possible.

R (Reverse): If the vehicle is shifted from either R (Reverse) to D (Drive) or D (Drive) to R (Reverse) while the speed is too high, the vehicle may shift to N (Neutral). Reduce speed and try the shift again.

To shift into R (Reverse):

1. Bring the vehicle to a complete stop.
2. From the center position, move the shift lever rearward toward you, and then up.

At low vehicle speeds, R (Reverse) can be used to rock the vehicle back and forth to get out of snow, ice, or sand without damaging the drive unit. See *If the Vehicle Is Stuck* ⇨ *177*.

D (Drive):

Caution

Spinning the tires excessively or holding the vehicle in one place on a hill using only the accelerator pedal may damage the electric drive unit. The repair will not be covered by the vehicle warranty. If the vehicle is stuck, do not spin the tires. When stopping on a hill, use the brakes to hold the vehicle in place.

To shift into D (Drive):

1. Ensure the vehicle is at a complete stop.
2. From the center position, move the shift lever rearward and then down.

N (Neutral):

Caution
The vehicle is not designed to stay in N (Neutral) for extended periods of time. It will automatically shift into P (Park).

To shift into N (Neutral), move the shift lever rearward. If the vehicle is in P (Park), apply the brake pedal while moving the shift lever rearward.

Car Wash Mode

This vehicle includes a Car Wash Mode that allows the vehicle to remain in N (Neutral) for use in automatic car washes.

The vehicle was neither designed nor intended to be towed with any of its wheels on the ground. If your vehicle is disabled and needs to be towed, see *Transporting a Disabled Vehicle* ⇨ *328*.

Car Wash Mode (Propulsion System Off – Driver In Vehicle)

To place the vehicle in N (Neutral) with the propulsion system off and vehicle occupied:

1. Drive to the entrance of the car wash.
2. Apply the brake pedal.
3. Shift to N (Neutral).
4. Turn off the vehicle and release the brake pedal.
5. The indicator should continue to show N. If it does not, repeat Steps 2–4.
6. Lock the doors with the interior lock switch or remote key to ensure that the outside door handles retract.

Car Wash Mode (Propulsion System Off – Driver Out of Vehicle)

To place the vehicle in N (Neutral) with the propulsion system off and vehicle unoccupied:

1. Drive to the entrance of the car wash.
2. Apply the brake pedal.
3. Open the door.
4. Shift to N (Neutral).
5. Turn off the vehicle and release the brake pedal.
6. The indicator should continue to show N. If it does not, repeat Steps 2–5.
7. Exit the vehicle and close the door.
8. Lock the doors with the remote key to ensure that the outside handles retract.

Car Wash Mode (Propulsion System On – Driver In Vehicle)

To place the vehicle in N (Neutral) with the propulsion system on and vehicle occupied:

1. Drive to the entrance of the car wash.
2. Apply the brake pedal.
3. Shift to N (Neutral).
4. Release the brake pedal.
5. Lock the doors with the interior lock switch or remote key to ensure that the outside door handles retract.

Car Wash Mode (Propulsion System On – Driver Out of Vehicle)

To place the vehicle in N (Neutral) with the propulsion system on and vehicle unoccupied:

1. Drive to the entrance of the car wash.

2. Apply the brake pedal.
3. Open the door.
4. Shift to N (Neutral), then release the brake pedal.
5. The indicator should continue to show N. If it does not, repeat Steps 2–4.
6. Exit the vehicle and close the door.
7. Lock the doors with the remote key to ensure that the outside handles retract.

One-Pedal Driving

One-pedal driving allows the use of the accelerator pedal to control the deceleration of the vehicle to a complete stop. Completely releasing the accelerator pedal will result in aggressive deceleration. Partially lifting off the accelerator pedal allows you to adjust vehicle deceleration as desired.

Use the brake pedal if emergency braking is required.

To view and configure one-pedal driving, from the infotainment display app screen, Select Controls > See More Controls > Drive & Park > One-Pedal Driving.

Select Off to disable one-pedal driving for traditional two-pedal driving, similar to a gasoline vehicle.

Select Normal to enable one-pedal driving where a moderate level of braking is applied when the accelerator pedal is released while driving.

Select High to enable one-pedal driving where a strong level of braking is applied when the accelerator pedal is released while driving.

When enabled, one-pedal driving applies in D (Drive). This feature remains enabled until you manually disable it. Press the accelerator pedal to the desired speed. The brake lights will come on during substantial deceleration and when the vehicle is stopped.

If one-pedal driving is turned off while stopped, the vehicle will stay stopped. Press the accelerator pedal to return to two-pedal driving.

For faster access, one-pedal driving can be selected in the Drive Mode app or the controls tray. If equipped, the controls button can be enabled in the one-pedal driving settings menu to allow a change of level.

Touch to turn one-pedal driving on or off. When turned on, one-pedal driving returns to the previously selected level. To change the level, press the Settings link in the pop-up box to go to the full one-pedal driving selection.

When possible, one-pedal driving uses regenerative braking to slow the vehicle for energy efficiency. Friction brakes may be used in some cases when regenerative braking is reduced. Friction brakes will be used to hold the vehicle after coming to a stop, and a noise may be noticed when the brakes apply.

When driving on slippery roads, it is recommended to turn off one-pedal driving. See *Winter Driving* ⇨ *176*.

While using one-pedal driving, the parking brake may apply in some circumstances. This can occur when:

- The driver exits the vehicle.
- The vehicle has remained stationary for five minutes.

To resume driving, press the accelerator pedal, and the parking brake will automatically disengage.

Drive Systems

All-Wheel Drive

If equipped, the electric All-Wheel Drive System maximizes driving efficiency by delivering power, as required, to all four wheels for improved traction and control.

Some electric all-wheel drive settings can be enhanced in certain driver modes. See *Driver Mode Control* ⇨ *192*.

Always take care to adjust your driving style to the traffic and road conditions when using electric all-wheel drive.

Brakes

Electric Brake Boost

Vehicles equipped with electric brake boost have hydraulic brake circuits that are electronically controlled when the brake pedal is applied during normal operation. The system performs routine tests and turns off within a few minutes after the vehicle is turned off. Noise may be heard during this time. If the brake pedal is pressed during the tests or when the electric brake boost system is off, a noticeable change in pedal force and travel may be felt. This is normal.

Antilock Brake System (ABS)

The Antilock Brake System (ABS) helps prevent a braking skid and maintain steering while braking hard.



If there is a problem with ABS, this warning light stays on. See *Antilock Brake System (ABS) Warning Light* ⇨ *101*.

Using ABS

Do not pump the brakes. Just hold the brake pedal down firmly. Hearing and feeling ABS operate is normal.

Braking in Emergencies

ABS does not always decrease stopping distance. If a vehicle suddenly slows or stops, there may not be enough time to apply the brakes. Always allow enough following distance between your vehicle and the vehicle ahead.

ABS allows you to steer and brake at the same time. In many emergencies, steering to make an evasive maneuver may help more than braking.

Regional regulations may require taillights to flash when an emergency brake event is experienced.

Electric Parking Brake

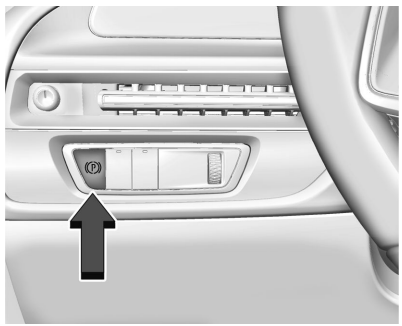

The Electric Parking Brake can always be applied, even if the vehicle is off. In case of insufficient electrical power, the Electric

Parking Brake cannot be applied or released. To prevent draining the battery, avoid unnecessary repeated cycles of the Electric Parking Brake.

The system has a red parking brake status light and an amber service parking brake warning light. See *Electric Parking Brake Light* ⇨ *101* and *Service Electric Parking Brake Light* ⇨ *101*. There are also parking brake-related Driver Information Center messages.

Before leaving the vehicle, check the red parking brake status light to ensure that the parking brake is applied.

Electric Parking Brake Apply

Caution
Driving with the parking brake on can overheat the brake system and cause premature wear or damage to brake system parts. Make sure that the parking brake is fully released and the brake warning light is off before driving.

To apply the Electric Parking Brake:

1. Be sure the vehicle is at a complete stop.
2. Press the Electric Parking Brake switch momentarily.

The red parking brake status light will flash and then stay on once the Electric Parking Brake is fully applied. If the red parking brake status light flashes continuously, then the Electric Parking Brake is only partially applied or there is a problem with the Electric Parking Brake . A Driver Information Center message will display. Release the Electric Parking Brake and try to apply it again. If the light does not come on, or keeps flashing, have the vehicle serviced. Do not drive the vehicle if the red parking brake status light is flashing, see your dealer.

If the amber service parking brake warning light is on, press the Electric Parking Brake switch. Continue to hold the switch until the red parking brake status light remains on. If the amber service parking brake warning light is on, see your dealer.

If the Electric Parking Brake is applied while the vehicle is moving, the vehicle will decelerate as long as the switch is pressed. If the switch is pressed until the vehicle comes to a stop, the Electric Parking Brake will remain applied.

The vehicle may automatically apply the Electric Parking Brake in some situations when the vehicle is not moving. This is normal, and is done to periodically check the correct operation of the Electric Parking Brake system, or at the request of other safety functions that utilize the Electric Parking Brake.

If the Electric Parking Brake fails to apply, block the rear wheels to prevent vehicle movement.

Electric Parking Brake Release

To release the Electric Parking Brake:

1. Turn the vehicle on.
2. Apply and hold the brake pedal.
3. Press the Electric Parking Brake switch momentarily.

The Electric Parking Brake is released when the red parking brake status light is off.

If the amber service parking brake warning light is on, release the Electric Parking Brake by pressing and holding the Electric Parking Brake switch. Continue to hold the switch until the red parking brake status light is off. If either light stays on after release is attempted, see your dealer.

Automatic Electric Parking Brake Release

The Electric Parking Brake will automatically release if the vehicle is running, placed into gear, and an attempt is made to drive away. Avoid rapid acceleration when the Electric Parking Brake is applied, to preserve parking brake lining life.

Brake Assist

Brake Assist detects rapid brake pedal applications due to emergency braking situations. It also provides additional braking to activate the Antilock Brake System if the brake pedal is not applied hard enough to activate it normally. Minor noise, brake pedal pulsation, and/or pedal movement during this time may occur. Continue to apply the brake pedal as the driving situation dictates. Brake Assist disengages when the brake pedal is released.

Post-Collision Braking (Secondary Collision Mitigation Braking)

This vehicle has a post-collision braking feature that may automatically engage to help slow your vehicle down after a crash. The feature may be disengaged by fully pressing the brake or accelerator pedal.

Hill Start Assist (HSA)

⚠ Warning

Do not rely on the HSA feature. HSA does not replace the need to pay attention and drive safely. You may not hear or feel alerts or warnings provided by this system. Failure to use proper care when driving may result in injury, death, or vehicle damage. See *Defensive Driving* ⇨ *172*.

When the vehicle is stopped on a grade, Hill Start Assist prevents the vehicle from rolling in an unintended direction during the transition from brake pedal release to accelerator pedal apply. The brakes release when the accelerator pedal is applied. The brakes may also release under other conditions. Do not rely on Hill Start Assist to hold the vehicle.

Hill Start Assist is available when the vehicle is facing uphill in a forward gear, or when facing downhill in R (Reverse). The vehicle must come to a complete stop on a grade for Hill Start Assist to activate.

Automatic Vehicle Hold (AVH)

⚠ Warning

Do not rely on this feature. It does not replace the need to pay attention and drive safely. You may not hear or feel alerts or warnings provided by this system. Failure to use proper care when driving may result in injury, death, or vehicle damage.



When Automatic Vehicle Hold (AVH) is turned on and the vehicle is braked to a stop, AVH prevents the vehicle from moving during the transition from brake pedal release to accelerator pedal apply. The brakes release

when the accelerator pedal is applied. The brakes may also release under other conditions. Do not rely on AVH to hold the vehicle.

If the accelerator pedal is not applied within a few minutes, the Electric Parking Brake will apply. The parking brake will also apply if the driver door is opened or the driver seat belt is unfastened while AVH is holding the vehicle.

AVH can be turned on by pressing AUTO HOLD. The AVH indicator will come on. While AVH is holding the vehicle, the AVH indicator will change to green. See *Automatic Vehicle Hold (AVH) Light* ⇨ *102*.

Regenerative Braking

Regenerative braking takes some of the energy from the moving vehicle and turns it back into electrical energy. This energy is then stored back into the high voltage battery system, contributing to increased energy efficiency.

Regenerative power may be limited when the battery is near full charge or cold. See "Regenerative Power Limited" under *Power Indicator Gauge* ⇨ *96*. Regenerative braking supplements your vehicle's conventional brakes, especially when going downhill. See *Hill and Mountain Roads* ⇨ *175*.

⚠ Warning

Do not charge your vehicle's battery above an 80% charge if you are going to drive down long, steep grades such as mountain passes. This provides room in the battery for regenerative braking to supplement your conventional brakes during the descent. This is especially important when towing a trailer, which puts additional stress on your vehicle's braking system.

See "Active Charging" under *Charging* ⇨ *107* for information on setting charge limits. See *Hill and Mountain Roads* ⇨ *175* for important information about driving on grades.

The brake system uses regenerative braking, conventional hydraulic braking, or a combination of both as appropriate.

Regen on Demand

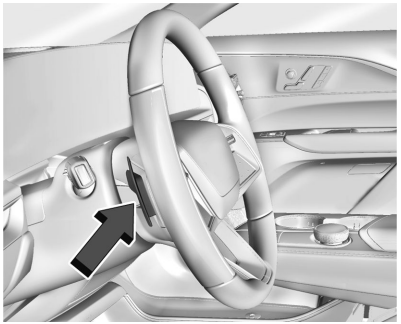

If equipped, Regen on Demand increases deceleration by pressing and holding the steering wheel paddle. Regen on Demand works in D (Drive). The accelerator pedal can be used to manage deceleration while using Regen on Demand. See *One-Pedal Driving* ⇨ *186*.

If the Regen on Demand is activated continuously during a power cycle, Regen on Demand increases deceleration after each use.

If the vehicle is brought to a complete stop while the Regen on Demand paddle is held, the vehicle will not creep forward when the paddle is released. The accelerator pedal must be pressed to move the vehicle forward.

If the vehicle is on a steep grade, the brake pedal must be used to hold the vehicle.

When available regenerative braking power is limited, the hydraulic brakes may be applied to make up the difference.

Cruise control will turn off and the brake lights may come on when this feature is activated.

Avoid using Regen on Demand under slippery road conditions. Use the brake pedal as the primary braking device.

Ride Control Systems

Traction Control/Electronic Stability Control

This vehicle has a Traction Control System and a StabiliTrak/Electronic Stability Control system. These systems help limit wheel spin and assist the driver in maintaining control, especially on slippery road conditions. Both systems turn on automatically when the vehicle is started and begins to move.

The Traction Control System activates if any of the drive wheels are spinning and beginning to lose traction. If this happens, the traction system reduces power and applies the brakes to limit wheel spin.

The StabiliTrak/Electronic Stability Control system activates when the vehicle senses a difference between the intended path and the direction the vehicle is actually traveling. The stability control system selectively applies braking pressure to any one of the vehicle wheel brakes to assist the driver in keeping the vehicle on the intended path.

If cruise control is engaged and the traction or stability control system begins to limit wheel spin, cruise control will disengage. Cruise control may be turned back on when road conditions allow.

The systems may be heard or felt while they are operating or while performing diagnostic checks. This is normal and does not mean there is a problem with the vehicle.

It is recommended to leave both systems on for normal driving conditions, but it may be necessary to turn the Traction Control System off if the vehicle gets stuck in sand, mud, ice, or snow. See *If the Vehicle Is Stuck* ⇨ *177* and "Turning the Systems Off and On" later in this section.

If equipped, Trailer Sway Control turns on automatically when the vehicle is started. See *General Towing Information* ⇨ *279*.



The indicator light for both systems is in the instrument cluster. This light will:

- Flash when the Traction Control System is limiting wheel spin.
- Flash when the StabiliTrak/Electronic Stability Control system is activated.
- Turn on and stay on when either system is not working.

See *Traction Control System (TCS)/Electronic Stability Control Light* ⇨ *104*.

If either system fails to turn on or to activate, a message displays in the Driver Information Center. The vehicle is safe to drive, but adjust driving accordingly.

If turns on and stays on:

1. Stop the vehicle.
2. Turn the vehicle off and wait 15 seconds.
3. Start the vehicle.
4. Drive the vehicle.

If stays on, the vehicle may need more time to diagnose the problem. If the condition persists, see your dealer.

Turning the Systems Off and On

Caution
Do not repeatedly brake or accelerate heavily when the Traction Control System is off. The vehicle driveline could be damaged.

To turn the Traction Control System on and off, in the controls app on the infotainment app screen, select Controls > See More Controls > Drive & Park > Traction Control. To turn StabiliTrak/Electronic Stability Control system on or off, select > next to the Traction Control menu. The following options appear:

- Traction Control Off
- Traction Control and StabiliTrak/ESC Off
- Traction Control and StabiliTrak/ESC On

The Traction Off light displays in the instrument cluster when the Traction Control System is turned off. When the Traction Control System is turned back on, the Traction Off light displayed in the instrument cluster will turn off. See *Traction Off Light* ⇨ *104*.

If the traction system is actively limiting wheel spin when disabled, the system will not turn off until the wheels stop spinning.

To turn StabiliTrak/Electronic Stability Control system off, select > next to the Traction Control menu. Select the Traction Control and StabiliTrak/ESC Off option. The StabiliTrak/Electronic Stability Control Off light OFF will display in the instrument cluster. See *Electronic Stability Control (ESC) Off Light* ⇨ *104*.

The Traction Control System cannot be engaged when the StabiliTrak/Electronic Stability Control system is off.

The StabiliTrak/Electronic Stability Control system automatically engages if the vehicle exceeds 56 km/h (35 mph) and cannot be turned off again until speed is reduced. The Traction Control System will remain off.

Entering Teen Driver will automatically enable both the Traction Control System and StabiliTrak/Electronic Stability Control system and prevent these safety features from being turned off. See *Teen Driver* ⇨ *156*.

Adding accessories can affect the vehicle performance. See *Accessories and Modifications* ⇨ *282*.

Driver Mode Control

Driver Mode Control allows the driver to adjust the overall driving experience by selecting different modes. Driver Mode Control may be equipped with the following modes: Tour, Sport, Snow/Ice, and two customizable modes: My Mode and V-Mode (V-Series Only). These modes adjust multiple systems to fit specific the driving needs. Driver mode availability and affected vehicle subsystems are dependent upon trim level, region, and optional features.

If the vehicle is in Tour mode, My Mode, or Sport mode, it will stay in that mode through future on/off cycles. If the vehicle is in any other mode, it will return to Tour mode when the vehicle is restarted. When each mode, except Tour mode, is selected, a unique and persistent indicator is displayed in the instrument cluster.

Mode Activation

To activate each mode, open the Drive Modes app on the infotainment app screen. Activate each mode by selecting the mode icon.

Mode Descriptions

Tour Mode: Use for normal city and highway driving to provide a smooth ride. This setting provides balance between comfort and handling.

Sport Mode: Use where road conditions or personal preference demand a more controlled response. Sport mode improves vehicle handling and acceleration on dry pavement. When active, Sport mode modifies steering efforts, pedal tuning, Electric Vehicle Sound Enhancement, adaptive cruise control, and suspension tuning, if equipped.

Snow/Ice Mode: Use for snow covered roads to improves vehicle acceleration. When active, Snow/Ice mode adjusts pedal tuning to optimize traction on slippery surfaces. This can compromise the acceleration on dry asphalt. Snow/Ice mode also modifies electric All-Wheel Drive.

This feature is not intended for use when the vehicle is stuck in sand, mud, ice, snow, or gravel. If the vehicle becomes stuck, see *If the Vehicle Is Stuck* ⇨ *177*.

My Mode: Use to personalize everyday driving. This mode allows the driver to configure the vehicle subsystem settings to their driving preferences. My Mode remains active across on/off cycles.

Through the infotainment screen, the following vehicle subsystems may be available for customization in this mode:

Acceleration Feel: Relaxed, Tour, Sport

Brake Feel: Tour, Sport

Steering: Tour, Sport

Suspension: Tour, Sport

Motor Sound: V-Series Only: Tour, Sport, V, Stealth

Non-V-Series: Tour, Sport, Stealth

For a more detailed description of each selectable option, see “Drive Mode Customization.”

V-Series Only

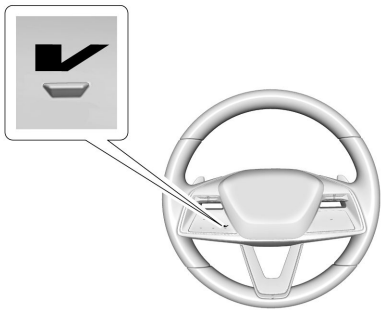

If equipped, press the V-Mode button on the steering wheel to activate and deactivate V-Mode. You can also deactivate it through selecting a different mode on the infotainment screen.

V-Mode: Use to personalize dynamic driving. This mode allows the driver to configure the vehicle subsystem settings to their driving preferences for maximum handling.

Through the infotainment screen, the driver can customize multiple settings. The following vehicle subsystems may be available for customization in this mode:

Motor Sound: Tour, Sport, V, Stealth

Steering: Tour, Sport

Suspension: Tour, Sport

Acceleration Feel: Relaxed, Tour, Sport

Brake Feel: Tour, Sport

Competitive Mode: Off, On

For a more detailed description on how each driver system is changed, see "Drive Mode Customization" later in this section.

Velocity Max Mode: Use to maximize propulsion power delivery when the accelerator pedal is fully pressed. Activating Velocity Max mode will not override the current drive mode, but will override the propulsion settings to give extra motor torque. Velocity Max mode modifies the pedal map, propulsion cooling, motor capability, motor sound, and electric All-Wheel Drive.

This feature will not work when the battery is low.

This mode is not designed for daily use. Extended usage of this mode will reduce range of the vehicle.

To activate this feature, follow these steps:

1. Press and hold the V-Mode button on the steering wheel.
2. Release the V-Mode button when displays appear in the instrument cluster.

To deactivate this feature, repeat the same steps performed to activate.

When Velocity Max mode is active, a torque gauge displays on the instrument cluster. The torque gauge indicates current motor torque being applied to the wheels. See *Power Indicator Gauge* ⇨ *96*.

There is also an indicator on the torque gauge showing the maximum available torque within the system. To get the most available torque, the system needs to be within a certain temperature range. If the system indicates that the motors are too hot, put your vehicle in P (Park). If the system indicates that the motors are too cold, drive or plug in the vehicle to warm.

Drive Mode Customization

The vehicle is equipped to modify the following settings based on vehicle content. Through the infotainment app screen, select Settings > Vehicle > Drive Mode Customization to personalize My Mode and V-Mode. These settings retain over each on/off cycle, and do not have to be reset each time the vehicle is started.

Acceleration Feel: Choose how responsive you want acceleration to feel. You can adjust the accelerator pedal to provide increased power.

Brake Feel: Brake response settings adjust the brake pedal response. Brake pedal feel is less sensitive at lower settings and more sensitive at higher settings.

Motor Sound: Customize how your vehicle sounds when you are accelerating. Your electric motor remains quiet outside but the sound you hear inside changes as you drive faster or slower.

Steering: Choose how responsive you want the steering to feel. You can set the steering wheel to provide more feedback, which requires more steering effort.

Suspension: Choose how responsive you want the suspension to feel. You can make the suspension stiffer or more comfortable.

Competitive Mode (V-Mode only): Competitive mode controls vehicle performance systems for professional handling on racetracks. Traction Control and StabiliTrak/Electronic Stability Control are reduced to allow driver to control wheel slip and vehicle rotation. Competitive mode may also automatically change the other subsystem settings.

Competitive Mode will not activate if SuperCruise is engaged.

Cruise Control

Adaptive Cruise Control (Advanced)

⚠ Warning

ACC has limited braking ability and may not have time to slow the vehicle down enough to avoid a collision with another vehicle you are following. This can occur when vehicles suddenly slow or stop ahead, or enter your lane. Also see "Alerting the Driver" later in this section. Complete attention is always required while driving and you should be ready to take action and apply the brakes. See *Defensive Driving* ⇨ *172*.

⚠ Warning

ACC will not detect or brake for children, pedestrians, animals, or other objects.

Do not use ACC when:

(Continued)

Warning (Continued)

- On winding and hilly roads or when the sensors are blocked by snow, ice, or dirt. The system may not detect a vehicle ahead. Keep the entire front of the vehicle clean.
- Visibility is poor due to rain, snow, fog, dirt, insect residue, or dust; when other foreign objects obscure the camera and/or radar; or when the vehicle in front or oncoming traffic causes additional environmental obstructions, such as road spray. ACC performance is limited under these conditions.
- On slippery roads where fast changes in tire traction can cause excessive wheel slip.

If equipped, Adaptive Cruise Control allows the cruise control set speed and following gap to be selected. Read this entire section before using this system. The following gap is the following time (or distance) between your vehicle and a vehicle detected directly ahead in your path, moving in the same direction. If no vehicle is detected in your path, Adaptive Cruise Control works like regular cruise control. the system uses a camera and radar sensor(s) to detect other vehicles.

If a vehicle is detected in your path, Adaptive Cruise Control can apply acceleration or limited, moderate braking to maintain the selected following gap. To disengage, apply the brake. If Adaptive Cruise Control is controlling the vehicle speed when the Traction Control System or StabiliTrak/Electronic Stability Control system activates, Adaptive Cruise Control may automatically disengage. See *Traction Control/Electronic Stability Control* ⇨ *191*. When road conditions allow the system to be safely used, it can be turned back on.

Disabling the Traction Control System or StabiliTrak/Electronic Stability Control system will disengage and prevent engagement of Adaptive Cruise Control.

Adaptive Cruise Control can reduce the need for you to frequently brake and accelerate, especially when used on expressways, freeways, and interstate highways. When used on other roads, you may need to take over the control of braking or acceleration more often.

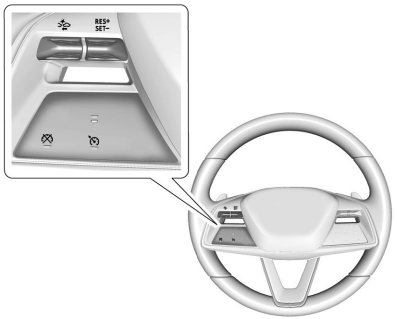

: Press to turn the system on or off. The indicator turns white on the instrument cluster when Adaptive Cruise Control is turned on.

RES+: Press briefly to resume the previous set speed or to increase vehicle speed if Adaptive Cruise Control is already activated. To increase speed by about 1 km/h (1 mph), press RES+ to the first detent. To increase speed to the next 5 km/h (5 mph) mark on the speedometer, press RES+ to the second detent.

SET–: Press briefly to set the speed and activate Adaptive Cruise Control or to decrease vehicle speed if the system is already activated. To decrease speed by about 1 km/h (1 mph), press SET– the first detent. To decrease speed to the next 5 km/h (5 mph) mark on the speedometer, press SET– to the second detent.

: Press to disengage Adaptive Cruise Control without erasing the selected set speed.

: Press to select a following gap setting for of Far, Medium, or Near.

The speedometer reading can be displayed in either English or metric units. See *Instrument Cluster* ⇨ *93*. The increment value used depends on the units displayed.

Switching Between Adaptive and Regular Cruise Control

⚠ Warning

Always check the cruise control indicator on the instrument cluster to determine which mode cruise control is in before using the feature. If ACC is not active, the vehicle will not automatically brake for other vehicles, which could cause a crash if the brakes are not applied manually. You and others could be seriously injured or killed.

To switch between Adaptive Cruise Control and regular cruise control, press and hold . A Driver Information Center message displays. See *Vehicle Messages* ⇨ *118*.

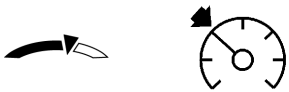

Adaptive Cruise Control Indicator **Regular Cruise Control Indicator**

When Adaptive Cruise Control is engaged, a green indicator will be lit on the instrument cluster and the following gap will be displayed. When the regular cruise control is engaged, a green indicator will be lit on the instrument cluster; the following gap will not display.

It is recommended to switch from Adaptive Cruise Control to regular cruise control only, when there are no vehicles ahead of your vehicle.

When the vehicle is turned on, the cruise control mode will be set to the last mode used before the vehicle was turned off.

Setting Adaptive Cruise Control

If is on when not in use, it could get pressed and go into Adaptive Cruise Control when not desired. Keep off when cruise is not being used.

Select the set speed. This is the vehicle speed when no vehicle is detected in your path.

While the vehicle is moving, Adaptive Cruise Control will not set at a speed below a minimum speed, although it can be resumed. If equipped with Super Cruise, this minimum speed is 5 km/h (3 mph), otherwise, it is 25 km/h (15 mph). The minimum allowable set speed is 25 km/h (15 mph).

To set Adaptive Cruise Control while moving:

1. Press .
2. Get up to the desired speed.
3. Press and release SET–.
4. Remove foot from the accelerator pedal.

After Adaptive Cruise Control is set, it may immediately apply the brakes if a vehicle ahead is detected closer than the selected following gap.

Adaptive Cruise Control can also be set while the vehicle is stopped if the system is on and the brake pedal is applied.



The Adaptive Cruise Control indicator displays on the instrument cluster and Head-Up Display, if equipped. When Adaptive Cruise Control is turned on, the indicator will be lit white. When the system is active, the indicator will turn green.

Be mindful of speed limits, surrounding traffic speeds, and weather conditions when selecting the set speed.

Resuming a Set Speed

If the Adaptive Cruise Control is set at a desired speed and then the brakes are applied, the system is disengaged without erasing the set speed from memory.

To begin using Adaptive Cruise Control again, press RES+ up briefly.

If the vehicle is moving more than 5 km/h (3 mph), it returns to the previous set speed.

If the vehicle is stopped with the brake pedal applied, press RES+ and release the brake pedal. Adaptive Cruise Control will hold the vehicle until RES+ or the accelerator pedal is pressed.

A green Adaptive Cruise Control indicator and the set speed display on the instrument cluster. The vehicle ahead indicator may be flashing if a vehicle ahead was present and moved. See “Approaching and Following a Vehicle” later in this section.

Once the system has resumed, the vehicle speed will increase to the set speed under the following conditions:

- There is no vehicle ahead.
- The vehicle ahead is beyond the selected following gap.
- The vehicle speed is not being limited because of a sharp turn.

Increasing Speed While Adaptive Cruise Control Is at a Set Speed

If Adaptive Cruise Control is already activated, do one of the following:

- Use the accelerator to get to the higher speed. Briefly press and release SET– and release the accelerator pedal. The vehicle will now cruise at the higher speed. When the accelerator pedal is pressed, Adaptive Cruise Control will not brake because it is overridden. While overridden, the Adaptive Cruise Control indicator will turn blue on the instrument cluster or Head-Up Display.
- Press and hold RES+ until the desired set speed is displayed, then release it.
- To increase speed in smaller increments, press RES+ to the first detent. For each press, the vehicle goes about 1 km/h (1 mph) faster.
- To increase speed in larger increments, press RES+ to the second detent. For each press, the vehicle speed increases to the next 5 km/h (5 mph) mark on the speedometer.

The set speed can also be increased while the vehicle is stopped if:

- stopped with the brake pedal applied, press RES+ until the desired set speed is displayed.
- Adaptive Cruise Control is holding the vehicle at a stop and there is another vehicle directly ahead, pressing RES+ will increase the set speed.
- and when pressing RES+ there is no longer a vehicle ahead or the vehicle ahead is pulling away and the brake is not applied with cause the Adaptive Cruise Control to resume.

When it is determined that there is no vehicle ahead or the vehicle ahead is beyond the selected following gap, then the vehicle speed will increase to the set speed.

Reducing Speed While Adaptive Cruise Control Is at a Set Speed

If Adaptive Cruise Control is already activated, do one of the following:

- Use the brake to get to the desired lower speed. Release the brake and press SET–. The vehicle will now cruise at the lower speed.
- Press and hold SET– until the desired lower speed is reached, then release it.
- To decrease speed in smaller increments, press SET– to the first detent. For each press, the vehicle goes about 1 km/h or (1 mph) slower.
- To decrease speed in larger increments, press SET– to the second detent. For each press, the vehicle speed decreases to the next 5 km/h (5 mph) mark on the speedometer.

The set speed can also be decreased while the vehicle is stopped.

If stopped with the brake applied, press or hold SET– until the desired set speed is displayed.

Selecting the Follow Distance Gap

When a slower moving vehicle is detected ahead within the selected following gap, Adaptive Cruise Control will adjust the vehicle's speed and attempt to maintain the follow distance gap selected.

Press on the steering wheel to adjust the following gap. Each press cycles the gap button through three settings: Far, Medium, or Near.

When pressed, the current gap setting displays briefly on the instrument cluster and Head-Up Display (if equipped). The gap setting will be maintained until it is changed.

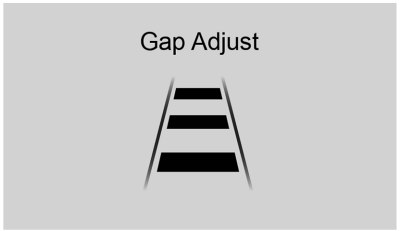

Far Gap Setting

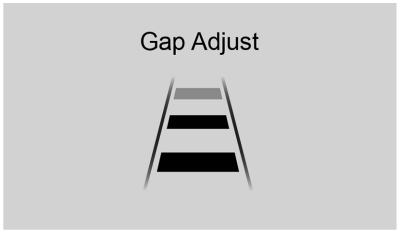

Medium Gap Setting

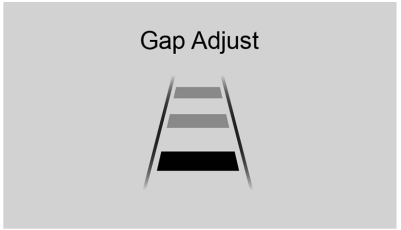

Near Gap Setting

If equipped, and a trailer is electrically connected, the gap setting display will be as follows:

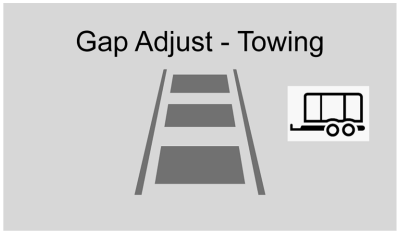

Far Gap Setting with Trailer

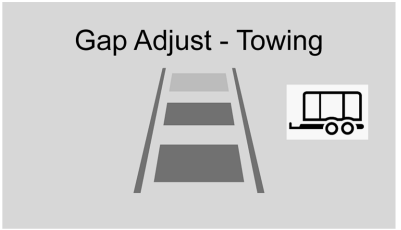

Medium Gap Setting with Trailer

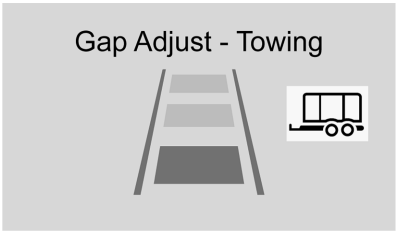

Near Gap Setting with Trailer

Since each gap setting corresponds to a following time (Far, Medium, or Near), the following distance will vary based on vehicle speed. The faster the vehicle speed, the further back your vehicle will follow a vehicle detected ahead. Consider traffic and weather conditions

when selecting the following gap. The range of selectable gaps may not be appropriate for all drivers and driving conditions.

Changing the gap setting automatically changes the alert timing sensitivity (Far, Medium, or Near) for the Forward Collision Alert feature. See *Forward Collision Alert (FCA) System* ⇨ *245*.

Courtesy Gap

Press and hold on the steering wheel when vehicle is moving to temporarily increase the gap with the vehicle ahead to allow for merging traffic.

Press and hold when stopped to cancel Adaptive Cruise Control from resuming automatically (if the stop is brief) and to remain stationary. This can be used to allow traffic to merge between you and the vehicle ahead. Press RES+ or the accelerator pedal to resume Adaptive Cruise Control.

Following distance gap will return to the original selection after hold.

Alerting the Driver

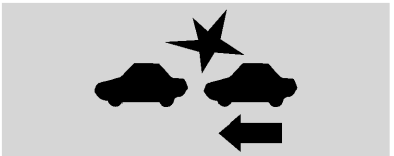

If Adaptive Cruise Control is engaged, driver action may be required when the system cannot apply sufficient braking because of approaching a vehicle too rapidly.

When this condition occurs, the collision alert symbol will flash on the windshield. Either eight audible alerts will sound from the front, or both sides of the Safety Alert Seat will pulse five times. To view available settings from the infotainment app screen, touch Settings > Vehicle > Speed Assist.

See *Defensive Driving* ⇨ *172*.

Approaching and Following a Vehicle



The vehicle ahead indicator is in the instrument cluster and Head-Up Display (if equipped). It only displays when a vehicle is detected in your vehicle's path moving in the same direction. If this symbol is not displaying, Adaptive Cruise Control will not respond to or brake for vehicles ahead.

Adaptive Cruise Control automatically slows the vehicle down and adjusts vehicle speed to follow a detected vehicle ahead at the selected following gap. The vehicle speed increases or decreases to follow a detected vehicle in front of your vehicle when that vehicle is traveling slower than your vehicle set speed. It may apply limited braking, if necessary. When braking is active, the brake lights will come on. The automatic braking may feel or sound different than if the brakes were applied manually. This is normal.

Passing a Vehicle While Using Adaptive Cruise Control

⚠ Warning

When using ACC to pass a vehicle or perform a lane change, the following distance to the vehicle being passed may be reduced. ACC may not apply sufficient acceleration or braking when passing a vehicle or performing a lane change. Always be ready to manually accelerate or brake to complete the pass or lane change.

If the set speed is high enough, and the left turn signal is used to pass a vehicle ahead in the selected following gap, Adaptive Cruise Control may assist by gradually accelerating the vehicle prior to the lane change.

Stationary or Very Slow-Moving Objects

⚠ Warning

ACC may not detect and react to stopped or slow-moving vehicles ahead of you. For example, the system may not brake for

(Continued)

Warning (Continued)

a vehicle it has never detected moving. This can occur in stop-and-go traffic or when a vehicle suddenly appears due to a vehicle ahead changing lanes. Your vehicle may not stop and could cause a crash. Use caution when using ACC. Your complete attention is always required while driving and you should be ready to take action and apply the brakes.

Irregular Objects Affecting Adaptive Cruise Control

Adaptive Cruise Control may have difficulty detecting the following objects:

- Vehicles with cargo extending from the back end.
- Non-standard shaped vehicles, such as vehicle transport, vehicles with a side car fitted, or horse carriages.
- Objects that are close to the front of your vehicle.

Adaptive Cruise Control Automatically Disengages

Adaptive Cruise Control may automatically disengage and the driver will need to manually apply the brakes to slow the vehicle if:

- The sensors are blocked.
- The Traction Control System or StabiliTrak/ Electronic Stability Control system has activated or been disabled.
- There is a fault in the system.
- The radar falsely reports blockage when driving in a desert or remote area with no other vehicles or roadside objects.
- A Driver Information Center message may display to indicate that Adaptive Cruise Control is temporarily unavailable.

The Adaptive Cruise Control indicator will turn white when the system is no longer active.

In some cases, when Adaptive Cruise Control is temporarily unavailable, regular cruise control may be used. See "Switching Between Adaptive and Regular Cruise Control" previously in this section. Always consider driving conditions before using either cruise control system.

Notification to Resume Adaptive Cruise Control

⚠ Warning

If ACC has stopped the vehicle, and if ACC is disengaged, turned off, or canceled, the vehicle will no longer be held at a stop. The vehicle can move. When ACC is holding the vehicle at a stop, always be prepared to manually apply the brakes.

⚠ Warning

Leaving the vehicle without placing it in P (Park) can be dangerous. Do not leave the vehicle while it is being held at a stop by ACC. Always place the vehicle in P (Park) and turn it off before leaving the vehicle.

Adaptive Cruise Control will maintain a follow gap behind a detected vehicle and slow your vehicle to a stop behind that vehicle.

If the stopped vehicle ahead has driven away and Adaptive Cruise Control has not resumed, the vehicle ahead indicator will flash as a reminder to check traffic ahead before proceeding. In addition, the left and right sides of the Safety Alert Seat will pulse three times, or three audible alerts will sound. To view available settings from the infotainment app screen, touch Settings > Vehicle > Speed Assist >Alert Type > Adaptive Cruise Go Notifier.

If equipped with Driver Attention System , when the vehicle ahead drives away, and Driver Attention System determines that the driver's attention is on the road ahead, Adaptive Cruise Control resumes automatically. See "Attention to the Road" under *Super Cruise* ⇨ *217*. If necessary, press RES+ or the accelerator pedal to resume. If stopped for more than two minutes or if the driver door is opened and the driver seat belt is unbuckled, the Adaptive Cruise Control automatically applies the electric parking brake) to hold the vehicle. The electric parking brake status light will turn on. See *Electric Parking Brake* ⇨ *187*.

A Driver Information Center warning message may display indicating to shift to P (Park) before exiting the vehicle. See *Vehicle Messages* ⇨ *118*.

Adaptive Cruise Control Override

⚠ Warning

The ACC will not automatically apply the brakes if your foot is resting on the accelerator pedal. You could crash into a vehicle ahead of you.

If using the accelerator pedal while Adaptive Cruise Control is active, the indicator turns blue on the instrument cluster or Head-Up Display (if equipped) indicating Adaptive Cruise Control braking will not occur. The system will resume operation when the accelerator pedal is not being pressed.

Curves in the Road

⚠ Warning

On curves, ACC may not detect a vehicle ahead in your lane. You could be startled if the vehicle accelerates up to the set speed, especially when following a vehicle exiting or entering exit ramps. You could lose control of the vehicle or crash. Do not

(Continued)

Warning (Continued)

use ACC while driving on an entrance or exit ramp. Always be ready to use the brakes if necessary.

⚠ Warning

On curves, ACC may respond to a vehicle in another lane, or may not have time to react to a vehicle in your lane. You could crash into a vehicle ahead of you, or lose control of your vehicle. Give extra attention in curves and be ready to use the brakes if necessary. Select an appropriate speed while driving in curves.

Adaptive Cruise Control may operate differently in a sharp curve. It may briefly reduce the vehicle speed if the curve is too sharp.

The curve speed control indicator may illuminate green when Adaptive Cruise Control is actively controlling the vehicle speed and detects a sharp curve on the road ahead.

Adaptive Cruise Control automatically slows the vehicle down while navigating the curve and may increase speed out of the curve, but will not exceed the set speed.

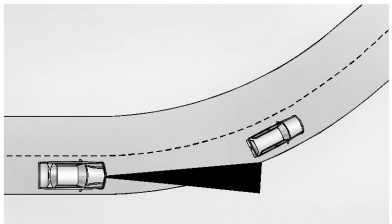

When following a vehicle and entering a curve, Adaptive Cruise Control may not detect the vehicle ahead and accelerate to the set speed. When this happens, the vehicle ahead indicator will not appear.

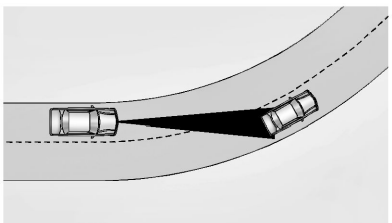

Adaptive Cruise Control may detect a vehicle that is not in your lane and apply the brakes.

Adaptive Cruise Control may occasionally provide an alert and/or braking that is considered unnecessary. It could respond to vehicles in different lanes or stationary objects when entering or exiting a curve. This is normal operation. The vehicle does not need service.

Other Vehicle Lane Changes

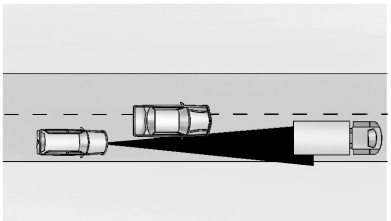

Adaptive Cruise Control will not detect a vehicle ahead until it is completely in the lane. The brakes may need to be manually applied.

Objects Not Directly in Front of Your Vehicle

The detection of objects in front of the vehicle may not be possible if:

- The vehicle or object ahead is not within your lane.

- The vehicle ahead is shifted, not centered, or is shifted to one side of the lane.

Driving in Narrow Lanes

Vehicles in adjacent traffic lanes or roadside objects may be incorrectly detected when located along the roadway.

Do Not Use Adaptive Cruise Control on Hills

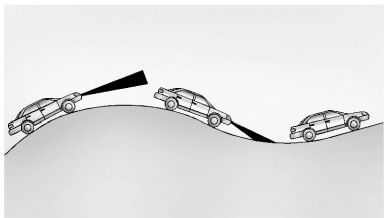

Do not use Adaptive Cruise Control when driving on steep hills. Adaptive Cruise Control will not detect a vehicle ahead.

Towing with Adaptive Cruise Control

Adaptive Cruise Control may be used when towing a trailer when trailer attached is within the GM-approved allowable size and weight limits. See *General Towing Information* ⇨ *279*.

When towing a trailer, if equipped, and while using Adaptive Cruise Control, the driving characteristics such as the following gap, acceleration rates, and braking rates may be modified to provide a better towing experience.

Towing a trailer with Adaptive Cruise Control is not recommended with an aftermarket brake controller. Aftermarket brake controllers may not function properly with the system.

When towing a trailer with Adaptive Cruise Control, it is important to properly set the trailer gain. See the section "Integrated Trailer Brake Control System" in *General Towing Information* ⇨ *279* for more information about the trailer gain adjustment procedure.

Adaptive Cruise Control maintains the set speed when driving uphill and downhill while towing a trailer. However, the system may make a slight changes to the cruise speed while driving on moderate hills if the combined vehicle and trailer weight is close to the maximum Gross Combined Weight Rating (GCWR). See *General Towing Information* ⇨ *279*. This is normal Adaptive Cruise Control operation and is necessary to maintain the set speed.

Adaptive Cruise Control may disengage if it detects that the brake temperature exceeds the normal range.

Disengaging Adaptive Cruise Control

There are four ways to disengage Adaptive Cruise Control:

- Step lightly on the brake pedal.
- Press .
- Press .
- Press the Regen On Demand paddle.

Erasing Speed Memory

The Adaptive Cruise Control set speed is erased from memory if is pressed or if the vehicle is turned off.

Auto Set Speed

If equipped, the Auto Set Speed function uses detected road speed limits to assist in setting the vehicle speed while ACC is engaged.

You can enable or disable this feature through vehicle settings. To view available settings from the infotainment app screen, touch Settings > Vehicle > Speed Assist > Adaptive Cruise Speed from Signs.

Auto Set Speed will remain enabled or disabled until another selection is made, even if the vehicle is turned off and on.

When ACC is engaged and Auto Set Speed is enabled, the vehicle will:

- Use the road speed limit to maintain a set vehicle speed.
- Prompt you to accept or decline speed limit changes, when detected.
- Change the ACC set speed to match the new road speed limit if accepted, when prompted.
- Not make any changes to the ACC set speed if declined, when prompted.
- Change the ACC set speed to the new road speed limit if no action is taken after receiving the prompt.

You can increase or decrease the ACC set speed at any time using the +RES / –SET thumbwheel, to a predefined limit. The accelerator pedal can also be used to override the set speed.

Change in the amount of increased or decreased speed, known as offset, is stored and applied for the next speed limit change.

There is a predefined maximum allowed value of offset beyond which the set speed cannot be changed.

The offset will not be retained if ACC is disengaged, if Auto Set Speed is disabled, and when the vehicle is turned off.

Warning

When using Auto Set Speed with ACC, the auto set speed may not always be updated when the speed limit changes. The system also does not set the vehicle speed to speed limits shown with supplementary traffic signs, for example in construction zones. Always be attentive to your surroundings and adhere to posted speed limit signs.

This function will not work when regular cruise control is the selected cruise control mode.

This function may not detect conditional speed limit signs, for example, during specific times or where workers are present.

Weather Conditions Affecting Adaptive Cruise Control

System operation may be limited under snow, heavy rain, or road spray conditions.

Accessory Installations and Vehicle Modifications

Do not install or place any object around the front camera windshield area that would obstruct the front camera view.

Do not install objects on top of the vehicle that overhang and obstruct the front camera, such as a canoe, kayak, or other items that can be transported.

Do not modify the hood, headlights, or fog lights, as this may limit the camera's ability to detect an object.

Warning

Stickers or accessories attached on or around the front or rear fascia of your vehicle can impair the radar sensors resulting in vehicle damage or personal injury. Your vehicle could brake suddenly. Do not attach anything on or around the front or rear fascia, including the license plate, the bumper, or the grille. Use only GM genuine accessories.

Do not attach anything to the front or rear fascia as this may interfere with the radar sensor operation.

Cleaning the Sensing System

The camera sensor on the windshield behind the rearview mirror, and the sensors on the front of the vehicle can become blocked by snow, ice, dirt, mud, or debris. This area needs to be cleaned for Adaptive Cruise Control to operate properly.

If Adaptive Cruise Control will not operate, regular cruise control may be available. See "Switching Between Adaptive and Regular Cruise Control" previously in this section. Always consider driving conditions before using either cruise control system.

For cleaning instructions, see "Washing the Vehicle" under *Exterior Care* ⇨ *330*.

Hands-On Steering Assist (Lane Centering Assistance)

⚠ Warning

Hands-On Steering Assist is a hands-on driver assistance feature. When using this feature, you must always keep your hands on the steering wheel and always be

(Continued)

Warning (Continued)

prepared to take immediate action. Hands-On Steering Assist provides lane centering steering assistance only by helping to maintain vehicle position in the current lane under certain, compatible conditions. Hands-On Steering Assist can only be used when Adaptive Cruise Control is enabled and engaged. Hands-on Steering Assist is not a self-driving system, does not perform all aspects of driving, and cannot accurately detect or predict all situations. Hands-On Steering Assist is not a crash avoidance system. To prevent serious injury or death, you must always supervise the driving task and always monitor the road conditions, including when Hands-on Steering Assist is engaged.

Hands-On Steering Assist does:

- Not prevent crashes or warn of possible crashes.
- Not provide steering or steering assistance to avoid stopped or slow-moving vehicles, cross-traffic,

(Continued)

Warning (Continued)

construction barriers or cones, motorcycles, children, pedestrians, animals, or other objects on the road.

- Not steer or provide steering assistance in response to vehicles or objects next to your vehicle, including vehicles attempting to enter your lane.
- Not respond to traffic lights, stop signs, or other traffic control devices.
- Not respond to crossing traffic.
- Not make turns.
- Not steer to merge onto or to exit highways.
- Not steer to avoid, or steer through construction zones.
- Not respond to oncoming traffic.
- Not function when lane markings are not detected or the vehicle is not centered in lane.

⚠ Warning

Failure to supervise the driving task and to respond appropriately, even while Hands-On Steering Assist is operating, can cause a crash. Hands-On Steering Assist may not respond as you would to all driving situations and may not maintain lane position under all conditions. It is extremely important to pay attention to the operation of the vehicle, even while using Hands-On Steering Assist. Do not use a hand-held device while driving, even with Hands-On Steering Assist engaged. To prevent serious injury or death:

- Always remain properly seated in the driver seat with your seat belt fastened.
- Always make sure traffic conditions are safe before using Hands-On Steering Assist.
- Always keep the front sensors clean.
- Always observe posted speed limits.
- Only use Hands-On Steering Assist at or below the posted speed limit.

(Continued)

Warning (Continued)

Hands-On Steering Assist should not be used in complex or uncertain driving conditions, including:

- Not when approaching or exiting toll plazas.
- Not when approaching an intersection that is controlled with a traffic light, stop sign, or other traffic control device.
- Not when lane markings are not present or cannot be detected. For example, there is too much glare, weather conditions are poor, or lanes are poorly marked.
- Not on slippery or icy roads.
- Not in adverse weather conditions, including rain, sleet, fog, ice, or snow.
- Not on winding or hilly roads.
- Not during heavy or emergency braking.
- Not when towing a trailer that does not meet GM approved guidelines.
- Not in a highway exit lane.

(Continued)

Warning (Continued)

Hands-On Steering Assist can only help the driver maintain a lane-centered position. You may need to respond to traffic events by steering, braking, or accelerating. Hands-On Steering Assist cannot determine whether you are awake, asleep, impaired, or properly focused on safe driving. If you are not attentive with your hands on the wheel and eyes on the road, when Hands-On Steering Assist disengages, the vehicle could crash into other vehicles, drive out of the lane, or drive off the road. See *Defensive Driving* ⇨ *172*.

⚠ Warning

Hands-On Steering Assist may not detect lane markings while traveling on curved roads. If this occurs, the vehicle could drift out of your lane of travel when Hands-On Steering Assist is engaged. Hands-On Steering Assist may also abruptly disengage more often around sharp curves especially when towing a trailer. To prevent

(Continued)

Warning (Continued)

crashes, always pay attention to the road and always be prepared to take immediate action by firmly steering the vehicle. You are always responsible for the safe operation of the vehicle, especially braking, steering, and controlling the speed and distance from other vehicles.

If equipped and enabled, Hands-On Steering Assist helps keep your vehicle centered in its lane using the front camera module to detect lane markings, steering wheel touch sensors to monitor hand placement, and the Driver Attention System to confirm your eyes are on the road.

Hands-On Steering Assist provides only steering assistance, it does not steer for you and requires you to keep your hands on the steering wheel at all times. When using this feature, the vehicle will maintain a set speed and following distance from a lead vehicle.

The Hands-On Steering Assist feature works with Adaptive Cruise Control. See *Adaptive Cruise Control (Advanced)* ⇨ *195*.

Hands-On Steering Assist differs from Lane Keep Assist, which offers limited steering correction only when a lane departure is detected, by providing continuous steering assistance when engaged. See *Lane Keep Assist (LKA)* ⇨ *258*.

To view available settings from the infotainment app screen, select Settings > Vehicle > Lane Centering Assistance.

Hands-On Steering Assist Requirements

Hands-On Steering Assist is designed to operate only when:

- Adaptive Cruise Control is engaged. See *Adaptive Cruise Control (Advanced)* ⇨ *195*.
- The system detects the driver's hands are on the steering wheel.
- The Driver Attention System detects the driver's head and eyes are directed toward the road ahead.
- The driver's seat belt is buckled.
- The lane markings are clearly visible and detectable by the system.
- The outside temperature is not too cold (i.e., not below 15° F (-9° C)).
- The vehicle speed is less than approximately 85 mph (137 km/h).
- Teen Driver, if equipped, is not active.
- The camera and radar sensors are functioning and not covered, obstructed, or damaged.
- Adjustable Ride Height, if equipped, must be at Normal ride height.
- There are no other conditions preventing the system from working properly.

Hands-On Steering Assist Limitations

Hands-On Steering Assist cannot provide sufficient lane steering assistance to keep the vehicle centered in all driving conditions. It will not change lanes and does not provide automatic lane changing – it provides lane centering assistance only within your current lane of travel. If the feature is unable to provide sufficient lane centering assistance, it may disengage abruptly with little advanced warning.

This feature may not be able to provide sufficient lane centering assistance in the following conditions:

- The required steering effort to maintain lane centering exceeds the system limit – for example, when the curve in the road is too tight or the curvature of the road combined with your speed exceeds the feature's steering assist capabilities.
- Lane markings are not present or cannot be detected, or when lanes merge or split. For example, there is too much glare, weather conditions are poor, or lanes are poorly marked.
- The area you are driving in is under construction or roadwork is in progress.
- The front windshield camera and/or the front radar are blocked.

Operating Hands-On Steering Assist

1. Start the vehicle.
2. Enable Adaptive Cruise Control by pressing the Adaptive Cruise Control button on the steering wheel. The white Adaptive Cruise Control light displays in the instrument cluster.
3. Enable Hands-On Steering Assist by pressing the steering assist button on the steering wheel.
   - The white Hands-On Steering Assist light displays in the instrument cluster.

     Adaptive Cruise Control and Hands-On Steering Assist, will remain enabled the next time you start the vehicle.
4. Engage Adaptive Cruise Control by pressing the SET+/RES– button. The green Adaptive Cruise Control light displays with the set speed limit.

   Once Adaptive Cruise Control is engaged, when your vehicle is centered in the lane and detects lane markers, Hands-On Steering Assist begins providing lane centering assistance. When Hands-On Steering Assist is engaged, the white Hands-On Steering Assist light displays green.

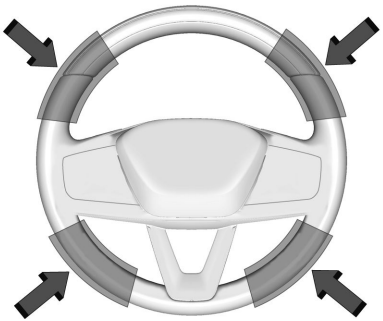

Steering Wheel Sensors

5. Hold the steering wheel firmly with both hands using the steering wheel sensor locations shown.

To adjust vehicle position within the lane, change lanes, turn, or maneuver around any object in your path, you must manually take control of the steering. Once you center the vehicle back in the lane, the feature will automatically reengage and actively provide hands-on lane centering steering assistance.

Manually Canceling Hands-On Steering Assist

Hands-On Steering Assist can be manually canceled by any of the following actions:

- Pressing the steering assist button on the steering wheel.
- Disengaging Adaptive Cruise Control by: stepping lightly on the brake pedal, pressing the Adaptive Cruise Control, or canceling the speed setting buttons on the steering wheel.
- Pressing the Regen On Demand paddle, if equipped.

Automatic Disengagement of Hands-On Steering Assist

Warning

Hands-On Steering Assist will not maintain the vehicle's speed while the Hands-On Steering Assist light is flashing red. If the Hands-On Steering Assist light flashes red, immediately take action by firmly steering the vehicle to prevent serious

(Continued)

Warning (Continued)

injury or death. If the feature is engaged, the green Hands-On Steering Assist light is illuminated, and you remove your hands from the steering wheel or eyes from the road, do not promptly return them, and ignore the alerts and messages, including the red flashing Hands-On Steering Assist light, the system will begin to apply the brakes and slowly bring your vehicle to a stop within the lane of travel and activate the hazard lights.

Disengagement Due to System Limitations

The system will automatically disengage when an external condition or system limitation exists, for example, no lane markers are detected or the curve in the road is too tight.

The system may disengage frequently and abruptly due to system limitations with little advance warning.

Disengagement Due to Hands-Off or Eyes-Off

The system will automatically disengage when the steering wheel sensors detect your hands are not on the steering wheel and your head and eyes are not directed toward the road ahead.

Warnings Before Disengagement

Before the system disengages due to system limitations or because your hands are off the steering wheel or your eyes are not focused on the road, you will receive one or more of the warnings below depending on the circumstances prompting your immediate action:

- An alert message displays in the Driver Information Center
- The Hands-On Steering Assist lights may flash green or turn red
- Audible alerts sound
- The Safety Alert Seat vibrates, if equipped and enabled

When this happens, you must take immediate action by firmly steering the vehicle and ensure your eyes are on the road ahead. When the feature is engaged and no system limitations are present and your hands are off the steering

wheel or eyes off the road, if you continue to ignore the alerts and fail to put your hands back on the steering wheel or eyes on the road, the system will begin to apply the brakes and slowly bring your vehicle to a stop within the lane of travel and activate the hazard lights.

Repeated misuse – hands off the steering wheel or eyes off the road – and disregard of these warnings may result in being locked out of the feature for a period of time. Repeated lockout events may delay the feature availability.

Caution

If you drive with your hand (or hands) on the top of the steering wheel, you may block the Driver Monitoring System camera, which is mounted on the top of the steering column. See *Defensive Driving* ⇨ *172*. If this camera is blocked, it cannot confirm that you have your eyes and attention on the road, and the system will alert you that it is disengaging if you do not put your eyes on the road. For the best experience with Hands-On Steering Assist, avoid holding the top center of the steering wheel to drive.

Hands-On Steering Assist will not provide steering assistance and will enter standby mode if a turn signal is active, if it detects that you are accelerating or braking quickly, or if you are intentionally steering across a lane marker.

When Adaptive Cruise Control is active and Hands-On Steering Assist is automatically disengaged, whether due to a system limitation or failure to keep hands on the steering wheel and eyes on the road, Hands-on Steering Assist remains in standby mode and will automatically reengage when the vehicle is again centered in the lane and the system detects lane markers.

How Adaptive Cruise Control and Hands-On Steering Assist Work Together

⚠ Warning

Taking your hands off the wheel can result in loss of control of the vehicle. Never take your hands off the wheel.

Adaptive Cruise Control and Hands-On Steering Assist provide increasing levels of driver assistance as follows:

1. Adaptive Cruise Control
   - Maintains your speed and following distance
2. Hands-On Steering Assist
   - Adds lane centering and steering support

The system automatically engages the highest level of assistance available and appropriate based on the road and operating conditions. The level of assistance available and its status, whether enabled (in standby mode), engaged (active mode), or when disengaging, is displayed in the instrument cluster, and message alerts in the Driver Information Center. See “Driver Assistance Levels and Display Indicators in Increasing Order of Assistance” later in this section.

Trailer Towing With Hands-On Steering Assist

Hands-On Steering Assist may be used when towing a trailer when the attached trailer is within size and weight limits designated in the Trailer Towing section. See *General Towing Information* ⇨ *279*.

When Hands-On Steering Assist is used with vehicles equipped with an aftermarket trailer brake controller, disengage Hands-On Steering Assist before applying the manual trailer brake. Hands-On Steering Assist will not automatically disengage when manual trailer brake is applied.

Hands-On Steering Assist can recognize when the vehicle is pulling a trailer and adjusts the following gap for extra stopping distance.

Hands-On Steering Assist Message Summary

Alert messages for this feature are displayed in the Driver Information Center. See *Instrument Cluster* ⇨ *93*. All alert messages refer to this feature as "Lane Centering Assistance".

Hands-on lane centering on but not active.	• Hands-On Steering Assist is enabled but not actively providing lane centering steering assistance. Hands-On Steering Assist has been temporarily overridden by the driver manually taking over steering control, for example, to manually change lanes.
Lane centering active. Keep hands on.	• Hands-On Steering Assist is actively providing steering assistance.
Take vehicle control.	• Hands-On Steering Assist is prompting you to take full manual control of steering immediately. If you fail to immediately resume full manual steering control, the system will disengage.
Lane centering assistance unavailable.	• Rain or snow is inhibiting the system's ability to see lane markers. • Direct sunlight is on the front camera. • There are missing or poor lane markings on the road. • There is sun glare on the road surface. • There is heavy rain, puddles, road spray, or inclement weather conditions that are affecting system performance. • Adaptive Cruise Control is not enabled.
Keep eyes on road while using lane centering.	• Alert for you to pay attention to the road.
Keep hands on for lane centering.	• Alert for you to keep hands on the steering wheel.

Lane centering assistance locked out.	• You did not take control of the vehicle when prompted by the Hands-On Steering Assist system. The Hands-On Steering Assist system will be disabled until the vehicle is turned off and back on.
Lane centering unavailable. Can't see face.	• Sun is shining into the Driver Attention System camera. • Sun glare is on the driver's face. • Cups, food, hands, or other objects are obscuring the Driver Attention System view of the driver's face. • The steering column is pointed too high or low for the Driver Attention System to detect the driver. • Adjust the steering column or the seat if the message occurs frequently.

Driver Assistance Levels and Display Indicators in Increasing Order of Assistance

Driver Assistance Feature	Instrument Cluster Light and Color	Steering Wheel Lightbar	Status of Driver Assistance Feature
Adaptive Cruise Control	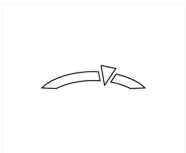 White	Off	Adaptive Cruise Control is enabled and in standby mode.
	 Green	Off	Adaptive Cruise Control is actively controlling your speed and maintaining an appropriate and preselected following distance with the lead vehicle.
	 Blue	Off	Adaptive Cruise Control was overridden and will not brake nor maintain following distance.

Driver Assistance Feature	Instrument Cluster Light and Color	Steering Wheel Lightbar	Status of Driver Assistance Feature
Hands-On Steering Assist (Lane Centering)	 White	Off	Hands-On Steering Assist is enabled but not actively providing lane centering steering assistance.
	 Green	Off	Hands-On Steering Assist is actively providing lane centering steering assistance.
	 Flashing Green	Off	Hands-On Steering Assist has detected your hands are not on the steering wheel or you are not paying sufficiently close attention to the road.

Driver Assistance Feature	Instrument Cluster Light and Color	Steering Wheel Lightbar	Status of Driver Assistance Feature
Hands-On Steering Assist (Lane Centering) (Continued)	 Red or Flashing Red	Off	Hands-On Steering Assist is prompting you to take full manual control of steering immediately. If you fail to immediately resume full manual steering control, the system will disengage.

System Care

Caution

The Hands-On Steering Assist system is a highly sophisticated system and should only be serviced by technicians with the proper training, tools, and safety instructions, which your dealer has. Without proper training and tools the vehicle may become damaged.

The Driver Attention System's camera on the steering column, which continually monitors the driver's head movements and eye gaze location to determine driver attentiveness, has a lens cover that may become dirty over time and affect camera performance. Clean the lens cover with a soft cloth sprayed with glass cleaner. Wipe the lens gently, then dry it. Never use abrasive cloths/cleaners or corrosive chemicals on the lens cover.

Super Cruise

⚠ Warning

Super Cruise does not perform all aspects of driving, nor does it do everything a driver can do. Super Cruise only steers to maintain

(Continued)

Warning (Continued)

vehicle position in the current lane or, under some circumstances, to change lanes. Super Cruise can only be used with Adaptive Cruise Control.

Super Cruise does:

- Not prevent crashes or warn of possible crashes.

(Continued)

Warning (Continued)

- Not steer to avoid stopped or slow-moving vehicles, cross-traffic, construction barriers or cones, motorcycles, children, pedestrians, animals, or other objects on the road.
- Not steer in response to vehicles or objects next to your vehicle, including vehicles attempting to enter your lane.
- Not respond to traffic lights, stop signs, or other traffic control devices.
- Not respond to crossing traffic.
- Not make turns.
- Not steer to merge onto or to exit highways.
- Not steer to avoid, or steer through construction zones.
- Not function on surface streets.
- Not respond to oncoming traffic.
- Not function in city driving conditions.

⚠ Warning

Failure to supervise the driving task and to respond appropriately, even while Super Cruise is operating, can cause a crash. Super Cruise may not respond as you would to all driving situations and may not maintain lane position under all conditions.

It is extremely important to pay attention to the operation of the vehicle, even while using Super Cruise. Do not use a hand-held device while driving, even with Super Cruise engaged. To prevent serious injury or death:

- Always remain properly seated in the driver seat with your seat belt fastened.
- Never remove your hands from the steering wheel when Super Cruise is not operating.
- Always make sure traffic conditions are safe before using Super Cruise.
- Always keep the entire vehicle and the sensors clean. Sensors are on the front, sides, and rear of the vehicle.

(Continued)

Warning (Continued)

- Always observe posted speed limits. Only use Super Cruise at or below the posted speed limit.

Super Cruise should not be used in complex or uncertain driving conditions, including:

- Not in construction zones.
- Not when approaching or exiting toll plazas.
- Not when approaching an intersection that is controlled with a traffic light, stop sign, or other traffic control device.
- Not when lane markings are not present or cannot be detected. For example, there is too much glare, weather conditions are poor, or lanes are poorly marked.
- Not on slippery or icy roads.
- Not in adverse weather conditions, including rain, sleet, fog, ice, or snow.
- Not on winding or hilly roads.
- Not for city driving.

(Continued)

Warning (Continued)

- Not during heavy or emergency braking.
- Not on surface streets.
- Not on a road shoulder, service drive, or under an elevated freeway.
- Not when towing a trailer that does not meet GM approved guidelines.
- Not in a highway exit lane.

⚠ Warning

Super Cruise can only assist to maintain lane position, or steer to change lanes, when driving on compatible roads. You must supervise the driving task and monitor the road conditions. You may need to respond to traffic events by steering, braking, or accelerating. See Defensive Driving.

Super Cruise is:

- Not a self-driving system

(Continued)

Warning (Continued)

- Not a crash avoidance or warning system
- Not a substitute for proper supervision of the driving task

⚠ Warning

Some state and local laws may require hands to be kept on the steering wheel at all times. Only remove your hands from the steering wheel if Super Cruise is engaged, it is safe to do so, and it is permitted by state and local laws.

⚠ Warning

To prevent serious injury or death, be alert and pay special attention when passing highway exits, entrances, and crossings with Super Cruise, and be ready to take control of the vehicle when necessary. Changes in lane markings around exits and entrances can momentarily cause Super

(Continued)

Warning (Continued)

Cruise to not detect the correct lane. If this occurs, Super Cruise may attempt steering inputs to bring the vehicle back into the correct lane and, in rare circumstances, could over-correct and cause the vehicle to momentarily cross into a lane next to your vehicle unless you manually steer to maintain your lane position.

If equipped, Super Cruise is an advanced driver assistance technology that allows hands-free driving on compatible roads. Additionally, it offers support for trailering, lane changes, and enables a Hands-On Steering Assistance feature across an expanded set of roads. See *Hands-On Steering Assist (Lane Centering Assistance)* ⇨ *206*. Super Cruise works with Adaptive Cruise Control to maintain vehicle set speed and following distance. The Driver Attention System monitors your head pose and eye gaze to ensure you're paying attention to the road. The Driver Attention System does not record or save video.

Super Cruise is designed to operate only when:

- The vehicle has an active Connected Service plan through OnStar.

- Adaptive Cruise Control is engaged. See *Adaptive Cruise Control (Advanced)* ⇨ *195*.
- The Driver Attention System detects the driver's head and eyes are directed toward the road ahead.
- The driver's seat belt is buckled.
- The lane markings are clearly visible and detectable by the system.
- The outside temperature is not too cold (i.e., not below 15° F (-9° C)).
- The vehicle speed is less than approximately 85 mph (137 km/h).
- Teen Driver, if equipped, is not active.
- The camera and radar sensors are functioning and not covered, obstructed, or damaged.
- Adjustable Ride Height, if equipped, must be at Normal ride height.
- There are no other conditions preventing the system from working properly.

When Super Cruise is unavailable, a message will display with the reason. See "Super Cruise Message Summary" later in this section.

You may also press and hold on the steering wheel to have the system display the unavailability message.

Engaging Super Cruise

⚠ Warning

Super Cruise is a driver assistance system and cannot accurately detect or predict all situations. Super Cruise is not a crash avoidance system. To prevent serious injury or death, you must supervise the driving task and monitor the road conditions. You may need to respond to traffic events by steering, braking, or accelerating. See *Defensive Driving* ⇨ *172*. Super Cruise also cannot determine whether you are awake, asleep, impaired, or properly focused on safe driving. The vehicle could crash into other vehicles, drive out of the lane, or drive off the road. Complete attention is always required while driving, even while using Super Cruise. Be prepared to take over steering or apply the brakes at any time.

⚠ Warning

Super Cruise may not begin steering immediately, even when Super Cruise is available and has been pressed. To prevent serious injury or death, only remove your hands from the steering wheel if the steering wheel lightbar, the Super Cruise light, and the Adaptive Cruise Control (ACC) light are green.

1. Make sure the vehicle is on and Adaptive Cruise Control is enabled. You will see one of two icons: a white illuminated or a green illuminated with the set speed limit. If you do not see either of these, press on the steering wheel.
2. Press on the steering wheel to enable Super Cruise.
3. Set the desired vehicle speed using the SET-/RES+ button.

The system automatically engages the appropriate level of assistance based on availability and operating conditions. There are three possible assistance levels:

Adaptive Cruise Control: When Adaptive Cruise Control is engaged, appears green in the instrument cluster. See *Adaptive Cruise Control (Advanced)* ⇨ *195*.

Hands-On Steering Assist: If enabled, when the vehicle is centered in the lane, and displays green in the instrument cluster, the vehicle provides steering assistance to help keep itself centered in the lane. When this feature is engaged, you must keep your hands on the steering wheel. To view available settings from the infotainment app screen, select Settings > Vehicle > Lane Centering Assistance.

See *Hands-On Steering Assist (Lane Centering Assistance)* ⇨ *206*.

Super Cruise Hands-Free: When the vehicle is centered in the lane, displays green in the instrument cluster, and the steering wheel lightbar turns green, you may take your hands off the steering wheel. This is the only level that allows for hands-free driving.

Adaptive Cruise Control, Hands-On Steering Assist, and Super Cruise, will remain enabled the next time you start the vehicle.

Lane Changes

⚠ Warning

To help prevent crashes before making a lane change:

- Always check mirrors.
- Glance over your shoulder.
- Use the turn signals.

⚠ Warning

Super Cruise Lane Change may not detect a vehicle in an adjacent lane. Always supervise the driving task and monitor traffic conditions when using the Super Cruise Lane Change feature. Only request a lane change when traffic conditions are safe for a lane change, and always be ready to manually steer the vehicle.

Super Cruise allows for manual, automatic, or turn signal activated lane changes. Automatic and turn signal activated lane changes are only available in Super Cruise hands-free functionality. Super Cruise Lane Change functionality may be disabled when a trailer or other accessories (e.g. bike rack, cargo tray, etc.) are detected. Do not use Super Cruise Lane Change when towing a trailer.

To view the available settings, from the infotainment app screen, touch Settings > Vehicle > Super Cruise Lane Change.

Automatic Lane Changes

Automatic lane changes are initiated by the system under the following conditions to:

- pass a slower vehicle.
- merge out of a lane that is ending.
- allow space for other vehicles to merge from a highway entrance ramp.
- follow a route set on the built-in navigation system. See *General Towing Information* ⇨ *279*.

To cancel an automatic lane change, activate the turn signal lever or steer manually.

Automatic Lane Change is not available when a construction zone is detected.

Turn Signal Activated Lane Changes

To initiate this type of lane change:

1. Ensure the adjacent lane is clear of traffic.

2. Activate the turn signal in the direction you want to go.
3. The system will steer the vehicle to perform the lane change.

To cancel a turn signal activated lane change, disengage the turn signal lever or steer manually.

Trailer Towing With Super Cruise

Super Cruise may be used when towing a trailer when the attached trailer is within size and weight limits designated in the Trailer Towing section. See *General Towing Information* ⇨ *279*.

When Super Cruise is used with vehicles equipped with aftermarket trailer brake controller, disengage Super Cruise before applying the manual trailer brake. Super Cruise will not automatically disengage when manual trailer brake is applied.

Super Cruise can recognize when the vehicle is pulling a trailer and adjusts the following gap for extra stopping distance. Automatic and turn signal activated lane changes are disabled for safety while trailering.

Stationary or Very Slow-Moving Objects; Cross-Traffic

⚠ Warning

Super Cruise is not a crash avoidance system and will not steer or brake to avoid a crash. Super Cruise does not steer to prevent a crash with stopped or slow-moving vehicles. You must supervise the driving task and may need to steer and brake to prevent a crash, especially in stop-and-go traffic or when a vehicle suddenly enters your lane. Always pay attention when using Super Cruise. Failure to do so could result in a crash involving serious injury or death.

Curves in the Road

⚠ Warning

The vehicle could drift out of your lane of travel. To prevent crashes, always be ready to manually steer. Super Cruise may not detect your lane on curves in the road. Super Cruise may not detect the markings

(Continued)

Warning (Continued)

that show your lane. You may not have time to react to a vehicle in the lane next to your vehicle while on curves in the road. Super Cruise may hand control back to the driver more often driving around a sharp curve while towing a trailer.

Super Cruise may operate differently in sharp curves. It may drift out of your lane of travel if the curve is too sharp.

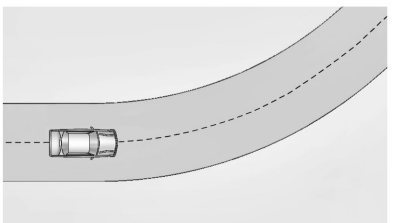

When entering a curve, Super Cruise may not detect the lane markings and may not adjust the steering enough to stay in your lane of travel. When this happens, you will need to steer the vehicle.

Super Cruise may detect other lane markings that are not in your lane and may or may not steer appropriately to maintain your lane.

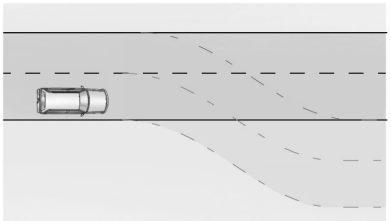

Super Cruise may occasionally provide an alert and/or steering that is considered unnecessary. It could respond to lane markings in different lanes, signs, guardrails, and other stationary objects when entering or exiting a curve. This is normal operation. The vehicle does not need service.

Other Vehicles Entering Your Lane

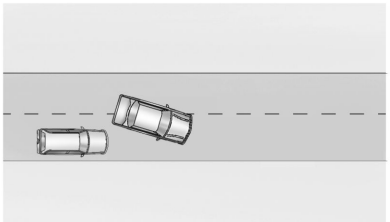

Super Cruise may not detect a vehicle that enters your lane, or may not brake fast enough to avoid a crash. You must manually brake and steer the vehicle.

Intersections and Vehicles Crossing the Road Ahead

Super Cruise will not brake the vehicle when approaching an intersection that is controlled by a traffic light or stop sign. Super Cruise will not detect vehicles crossing the road ahead, including at intersections, and will not automatically steer or brake to prevent a collision. You must manually brake and steer the vehicle.

Super Cruise on Hills

Do not use Super Cruise while driving on steep hills.

Disengaging Super Cruise

To cancel or turn off Super Cruise in your vehicle, you can use one of the following methods:

- Press on the steering wheel to disengage Super Cruise.
- Press the brake pedal to disengage Super Cruise and Adaptive Cruise Control.
- Turn Adaptive Cruise Control off. This also disengages Super Cruise.
- Use the Regen on Demand paddle, if equipped, to disengage Super Cruise and Adaptive Cruise Control.

Super Cruise Status and Lightbar

⚠ Warning

Super Cruise will not maintain the vehicle's speed while the steering wheel lightbar is flashing red. If the steering wheel lightbar

(Continued)

Warning (Continued)

flashes red, immediately resume manual steering to prevent serious injury or death. If you do not resume manual steering, the vehicle will begin to slow in the same lane and eventually come to a complete stop on the road.

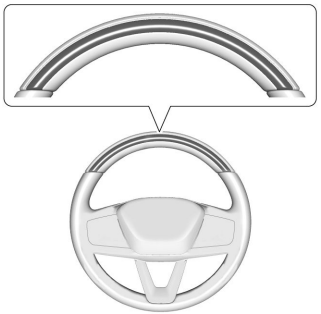

Driver Assistance Levels and Display Indicators in Increasing Order of Assistance

Driver Assistance Feature	Instrument Cluster Light and Color	Steering Wheel Lightbar	Status of Driver Assistance Feature
Adaptive Cruise Control, if equipped	 White	Off	Adaptive Cruise Control is enabled and in standby mode.
	 Green	Off	Adaptive Cruise Control is actively controlling your speed and maintaining an appropriate and preselected following distance with the lead vehicle.
	 Blue	Off	Adaptive Cruise Control was overridden and will not brake nor maintain following distance.

Driver Assistance Feature	Instrument Cluster Light and Color	Steering Wheel Lightbar	Status of Driver Assistance Feature
Hands-On Steering Assist (Lane Centering), if equipped	 White	Off	Hands-On Steering Assist is enabled but not actively providing lane centering steering assistance.
	 Green	Off	Hands-On Steering Assist is actively providing lane centering steering assistance.
	 Flashing Green	Off	Hands-On Steering Assist has detected your hands are not on the steering wheel or you are not paying sufficiently close attention to the road.

Driver Assistance Feature	Instrument Cluster Light and Color	Steering Wheel Lightbar	Status of Driver Assistance Feature
Hands-On Steering Assist (Lane Centering), if equipped (Continued)	 Red or Flashing Red	Off	Hands-On Steering Assist is prompting you to take full manual control of steering immediately. If you fail to immediately resume full manual steering control, the system will disengage.
Hands-Free Super Cruise, if equipped	 White	Off	Hands-Free Super Cruise is enabled and in standby mode.
	 Green	Green	Hands-Free Super Cruise is actively steering your vehicle. Pay attention to the road and vehicle operation. Do not take your hands off the wheel until the steering wheel lightbar is solid green.

Driver Assistance Feature	Instrument Cluster Light and Color	Steering Wheel Lightbar	Status of Driver Assistance Feature
Hands-Free Super Cruise, if equipped (Continued)	 Green	Flashing Green	Hands-Free Super Cruise has detected you are not paying sufficiently close attention to the road. Pay attention to the road ahead. The steering wheel lightbar will flash green as well.
	 Red	Flashing Red	Take over steering immediately. Hands-Free Super Cruise will disengage if you fail to take over steering. The steering wheel lightbar will flash red.

When Super Cruise is Steering

When the vehicle is positioned in the center of the lane, the steering wheel lightbar and will turn green, indicating Super Cruise is steering the vehicle.

When Super Cruise controls the steering, traffic and other conditions and laws permit, and it is safe to do so, your hands can be taken off the steering wheel.

Always pay attention to the road and the operation of the vehicle. Always monitor and be attentive of surrounding traffic, including vehicles that may cross the road in front of your vehicle.

Cooperative or Manual Steering

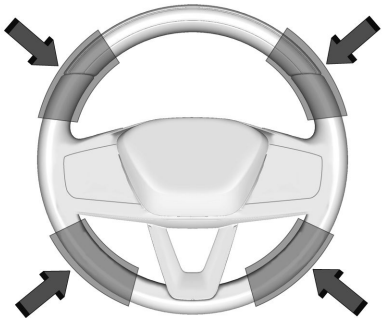

Super Cruise steering can be overridden with manual steering at any time. To begin steering manually, hold the steering wheel firmly with both hands using the steering wheel sensor locations shown.

You can adjust vehicle position within the lane by cooperatively steering the vehicle. If you steer out of the lane, the system will disengage.

When ready to allow Super Cruise to resume steering again, position the vehicle in the center of the lane, hold the steering wheel until the steering wheel lightbar turns green, and then release the steering wheel when it is safe to do so.

Escalation Requiring Driver To Take Control of the Steering Wheel

When you are required to take control of the steering wheel, , and the steering wheel lightbar will turn red, and a message will display in the Driver Information Center. When you begin steering manually, Super Cruise will disengage.

In addition, audible alerts will sound, or the Safety Alert Seat will vibrate, if equipped. To view collision and detection settings, from the infotainment app screen, touch Settings > Vehicle > Collision/Detection Systems.

The red flashing steering wheel lightbar could occur under any of the following conditions:

- The lane markings are poor, or visibility is limited.
- The Driver Attention System does not detect that the driver's head and eyes are directed toward the road ahead.
- Adaptive Cruise Control is cancelled.
- The vehicle is on a tight curve, the lane is too wide, or the vehicle enters a curve too quickly.
- The Super Cruise enabled road ends.
- The vehicle is approaching an intersection controlled by a traffic light, stop sign, or other traffic control device.
- A Super Cruise system fault occurs.
- Super Cruise is unable to complete a lane change maneuver.
- Super Cruise detects that the outside temperature is too cold to operate correctly.
- The driver's seatbelt becomes unbuckled.

The system will be locked out if driver does not take control of the vehicle when prompted. The system may be disabled for short duration. If the driver repeatedly does not take control of the vehicle when prompted, the system will be disabled until the vehicle is turned off and back on.

Super Cruise Message Summary

Subscription Required - Press OnStar Button	• The owner's required Connected Services subscription may have ended. • Press the Blue OnStar button in your vehicle to speak with an OnStar representative, who can help determine the issue and what actions to take
Unavailable Turn on Adaptive Cruise Control	Adaptive Cruise Control must be on before Super Cruise can be enabled. • Set speed is not required before enabling Super Cruise. • Adaptive Cruise Control is not required to be engaged before enabling Super Cruise.
Unavailable Lane Ending	Super Cruise is disabled because the driving lane is ending.
Unavailable No Road Information	• There is no map information available for that portion of the road. Recent road reconstruction may turn off Super Cruise for that section of road until new map information is available. • The vehicle is not on the correct type of road. A controlled access freeway or compatible divided or non-divided road is required for Super Cruise. • There are lanes entering or exiting on both the left and right side of the road.
Unavailable Sensors Can't Find Lane Lines	• Rain or snow is inhibiting the system's ability to see lane lines. • Direct sunlight is on the front camera at dawn or dusk. • There are missing or poor lane line markings on the road. • There is sun glare on the road surface. • There is heavy rain, puddles, road spray, or inclement weather conditions that are affecting system performance.

Unavailable Sensor Can't See Face Clearly	• Sun is shining into the Driver Attention System camera. • Dawn or dusk sun glare is on the driver's face. • Cups, food, hands, or other objects are obscuring the Driver Attention System view of the driver's face. • The steering column is pointed too high or low for the Driver Attention System to see the driver. Adjust the steering column or the seat if the message occurs frequently.
Unavailable Looking Away From Road for Too Long	The Driver Attention System detects that the driver is not looking at the road.
Unavailable Driving Too Fast	The vehicle is traveling faster than 137 km/h (85 mph). The maximum Super Cruise speed in curves will vary based on how sharp the curve is. The vehicle will automatically decrease speed if needed.
Unavailable Driving in Exit Lane	The Super Cruise system has detected that the vehicle is in an exit lane.
Unavailable GPS Signal Lost	• There is poor reception in isolated areas. • Reception is being blocked by buildings or other large structures.
Unavailable You Have Taken Vehicle Control	• The brake pedal is being pressed. • Adaptive Cruise Control has been canceled or turned off.
Unavailable Sensor Blocked	Clear snow, ice, dirt, or other contaminants from the front and rear areas of the vehicle.
Unavailable Sharp Curve	Some curves are too sharp to be navigated by the Super Cruise system. Super Cruise will be available after the curve is traveled.

Unavailable Over Weight Limit	Super Cruise has detected that the trailer is over the allowable weight limit.
Unavailable Trailer Too Unstable	Super Cruise has detected that the attached trailer is causing an unstable condition. Check the trailer and/or load.
Unavailable Trailer Too Large	Trailer size (length/width) is larger than supported for Super Cruise operation.
Unavailable Lane Too Narrow	Super Cruise has detected that the lane width ahead is too narrow for Super Cruise operation while towing a trailer.
Super Cruise Unavailable	Super Cruise is unavailable for reasons not described in other messages.
Super Cruise Locked Out See Owner's Manual	The driver did not take control of the vehicle when prompted by the Super Cruise system. The Super Cruise system will be disabled until the vehicle is turned off and back on.
Unavailable Seat Belt Not Fastened	The driver seat belt is not fastened.
Unavailable Teen Driver Mode Active	Teen Driver mode is engaged.
Unavailable Snow Mode	A snow plow is attached.
Unavailable Unsupported Intersection	Super Cruise has detected an unsupported intersection.
Unavailable Approaching Toll Booth	Super Cruise has detected that there is a toll booth ahead.

Unavailable Ride Height Out of Range	The vehicle ride height is out of Super Cruise operational range.
Caution Construction Zone - Drive With Care	Super Cruise has detected a construction zone.

Map Updates

Super Cruise relies on precise LIDAR based maps, these are often called High Definition (HD) Maps. These HD Maps are regularly updated by GM and sent to your vehicle. This will happen automatically as your vehicle is driven. This will not require any user input. If there is any issue with these HD Map updates, a Service Driver Assist error message will be displayed. If this message is displayed, please contact an authorized GM Service Center.

Connectivity

An active Connected Service plan that includes Super Cruise Services is required to use Super Cruise and Hands-On Steering Assist. If the vehicle is equipped with OnStar and has an active service plan, additional data may be collected through the OnStar system. This includes information about: the vehicle's operation; a crash involving the vehicle; the use of the vehicle and its features; and, in certain situations, the location and approximate GPS speed of the vehicle. Refer to the OnStar Terms and Conditions and Privacy Statement on the OnStar website.

For additional information on Hands-On and Hands-Free driving, see https://www.onstar.com/services/super-cruise-hands-free-driving.

Location Services

This setting enables or disables location services for OnStar. If you disable location services, GM may still collect vehicle location information from the vehicle in the event of an emergency (such as in the event of a crash, when the emergency call button is pressed, or where there is overheating of a high voltage battery).

System Care

Caution

The Super Cruise system is a highly sophisticated system and should only be serviced by technicians with the proper training, tools, and safety instructions, which your dealer has. Without proper training and tools the vehicle may become damaged.

The camera on the steering column has a lens cover that may become dirty over time and affect camera performance. Clean the lens cover with a soft cloth sprayed with glass cleaner. Wipe the lens gently, then dry it. Never use abrasive cloths/cleaners or corrosive chemicals of any kind on the lens cover.

Super Cruise uses the front radar, front camera, rear radar, and 360-degree cameras for its operation. Clean surfaces are required for Super Cruise operation. See *Adaptive Cruise Control (Advanced)* ⇨ *195*, *Surround Vision System* ⇨ *236*, and *Lane Keep Assist (LKA)* ⇨ *258* for care information.

Advanced Driver Assistance Systems

⚠ Warning

Do not rely on the Driver Assistance Systems. These systems do not replace the need for paying attention and driving safely. You may not hear or see alerts or warnings provided by these systems. Failure to use proper care when driving may result in injury, death, or vehicle damage. See *Defensive Driving* ⇨ *172*.

Under many conditions, these systems will not:

- Detect children, pedestrians, bicyclists, or animals.

(Continued)

Warning (Continued)

- Detect vehicles or objects outside the area monitored by the system.
- Work at all driving speeds.
- Warn you or provide you with enough time to avoid a crash.
- Work under poor visibility or bad weather conditions.
- Work if the detection sensor is not cleaned or is covered by ice, snow, mud, or dirt.
- Work if the detection sensor is covered up, such as with a sticker, magnet, or metal plate.
- Work if the area surrounding the detection sensor is damaged or not properly repaired.

Complete attention is always required while driving, and you should be ready to take action and apply the brakes and/or steer the vehicle to avoid crashes.

⚠ Warning

Stickers or accessories attached on or around the front or rear fascia of your vehicle can impair the radar sensors resulting in vehicle damage or personal injury. Your vehicle could brake suddenly. Do not attach anything on or around the front or rear fascia, including the license plate, the bumper, or the grille. Use only GM genuine accessories.

This vehicle may have features that work together to help avoid crashes or reduce crash damage while driving, backing, and parking. Read this entire section before using these systems.

Audible Alert or Safety Alert Seat

Some driver assistance features alert the driver of obstacles through audible alerts. To view available settings from the infotainment app screen, touch Settings > Vehicle > Comfort and Convenience.

If equipped with the Safety Alert Seat, the driver seat cushion may provide a vibrating pulse alert instead of audible alerts. To view

available settings from the infotainment app screen, touch Settings > Vehicle > Collision/ Detection Systems.

Cleaning

Depending on vehicle options, keep these areas of the vehicle clean to ensure the best driver assistance feature performance. Driver Information Center messages may display when the systems are unavailable or blocked.



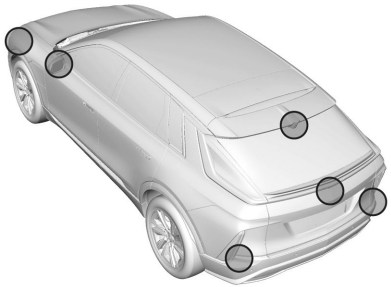

- Front and rear bumpers and the area below the bumpers
- Front grille and headlights
- Front camera lens in the front grille or near the front emblem
- Front side and rear side panels
- Outside of the windshield in front of the rearview mirror
- Side camera lens on the bottom of the outside mirrors
- Rear side corner bumpers
- Rear Vision Camera above the license plate

Assistance Systems for Parking or Backing

If equipped, the Rear Vision Camera, Rear Park Assist, Surround Vision, Side Bicycle Detection, and Rear Cross Traffic Alert may help the driver park or avoid objects. Always check around the vehicle when parking or backing.

Rear Vision Camera (RVC)

⚠ Warning

The camera(s) do not display children, pedestrians, bicyclists, crossing traffic, animals, or any other object outside of the cameras' field of view, below the bumper, or under the vehicle. Shown distances may be different from actual distances. Do not drive or park the vehicle using only these camera(s). Always check behind and around the vehicle before driving. Failure to use proper care may result in injury, death, or vehicle damage.

When the vehicle is shifted into R (Reverse), the Rear Vision Camera displays an image of the area behind the vehicle in the infotainment

display. The previous screen displays when the vehicle is shifted out of R (Reverse) after a short delay. To return to the previous screen sooner, press ⌂ on the center stack, shift into P (Park), or reach a vehicle speed of approximately 12 km/h (8 mph).

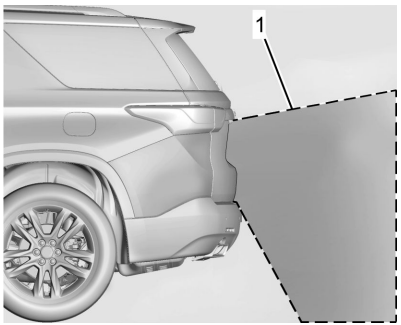

1. View Displayed by the Camera

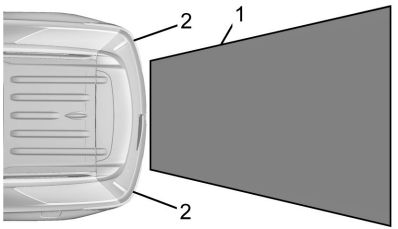

1. View Displayed by the Camera
2. Corners of the Rear Bumper

Displayed images may be farther or closer than they appear. The area displayed is limited and objects that are close to either corner of the bumper or under the bumper do not display.

A warning triangle may display to show that Rear Park Assist has detected an object. This triangle changes from amber to red and increases in size the closer the object.

If ⚠ or a service message appears on the infotainment display, there may be a camera malfunction. See your dealer.

Surround Vision System

If equipped, Surround Vision displays an image of the area surrounding the vehicle, along with the front or rear camera views on the infotainment display. The front camera is in the grille or near the front emblem, the side cameras are on the bottom of the outside mirrors, and the rear camera is above the license plate.

The Surround Vision system can be accessed by selecting CAMERA in the infotainment display or when the vehicle is shifted into R (Reverse). To return to the previous screen sooner, when not in R (Reverse) press Home or Back on the infotainment system, shift into P (Park), or reach a vehicle speed of approximately 12 km/h (8 mph) while in D (Drive).

⚠ Warning

The Surround Vision cameras have blind spots and will not display all objects near the corners of the vehicle. Folding outside mirrors that are out of position may not display surround view correctly. Always check around the vehicle when parking or backing.



1. Views Displayed by the Surround Vision Cameras
2. Area Not Shown

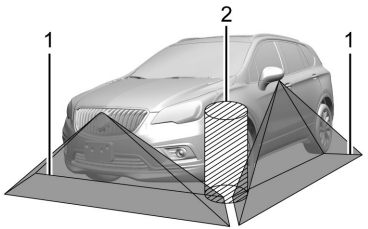

1. Views Displayed by the Surround Vision Cameras
2. Area Not Shown

⚠ Warning

The camera(s) do not display children, pedestrians, bicyclists, crossing traffic, animals, or any other object outside of the cameras' field of view, below the bumper, or under the vehicle. Shown distances may be different from actual distances. Do not drive or park the vehicle using only these camera(s). Always check behind and around the vehicle before driving. Failure to use proper care may result in injury, death, or vehicle damage.

Camera Views

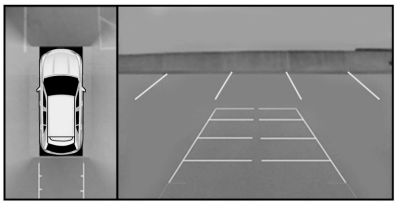

Touch the camera view buttons along the bottom of the infotainment display.

Front/Rear Standard View: Displays an image of the area in front or behind the vehicle. Touch Front/Rear Standard View on the infotainment display when a camera view is active. Touching the button multiple times will toggle between front and rear camera views.

If equipped, the front view camera also displays when the Park Assist system detects an object within 30 cm (12 in).

Front/Rear Overhead View: Displays a front or rear overhead view of the vehicle. Touching the button will toggle between the two views.

Side Forward/Rearward View: Displays a view that shows objects next to the front or rear sides of the vehicle. Touch Side Forward/Rearward View on the infotainment display when a camera view is active. Touching the button multiple times will toggle between forward and rearward views. Park Assist and Rear Cross Traffic Alert overlays are not available when Side Forward/Rearward view is active.

Camera App Guidance Lines: The Camera App supports three possible guidance modes: No Guidance, Vehicle Guidance and Trailering Guidance. The Guidance Lines Icon may appear as a selection on the screen when

a view supports guidance lines. To change the guidance mode, select the appropriate guidance icon. Depending on the guidance mode and view selected, different guidance lines may appear. A grayed-out icon indicates that guidance lines are not available. Certain views do not support guidance lines.

Cabin Glance: If equipped, displays a live feed of the seating area on the infotainment screen. This view is used to monitor the occupants of the vehicle without needing to turn around. The video is real-time only and is not recorded or stored.

Surround View: Touch the Surround View Icon to enable or disable this view. Displays an image of the area surrounding the vehicle. Surround View is displayed alongside the currently selected view.

Hitch View

Displays a zoomed-in view of the hitch area to assist with aligning the vehicle's hitch ball with the trailer coupler and monitoring the trailer connection. To view, select Hitch View on the infotainment display when the Camera App is active. The view can be closed by selecting X, Home or Back on the infotainment display. Shifting into P (Park) while in this view will automatically engage the Electric Parking Brake (EPB).

Park Assist

⚠ Warning

The Park Assist System is no substitute for careful and attentive driving. The Park Assist system does not detect children, pedestrians, bicyclists, animals, or objects located below the bumper or that are too close or too far from the vehicle. It is not available at speeds greater than 9 km/h (6 mph). To prevent injury, death, or vehicle damage, even with Park Assist, always check the area around the vehicle and check all mirrors before moving forward or backing.

The vehicle may be equipped with Front and Rear Park Assist. Under certain conditions, the Park Assist system can assist the driver during backing and parking maneuvers when the vehicle is driven at no more than 9 km/h (6 mph). An illuminated indicator in the Park Assist button indicates the system is ready.

Sensors located in the bumpers measure the distance between the vehicle and objects using sonar technology. These sensors are designed to detect certain objects up to 1.8 m (6 ft) behind and 1.2 m (4 ft) in front of your vehicle that are taller than 25 cm (10 in).

Different environmental conditions may affect whether and how far the Park Assist system can detect objects. Keep the sensors clean of mud, dirt, snow, ice, and slush; and clean sensors after a car wash in freezing temperatures. Sensors that are not clean may not detect objects or may cause the system to alert when not required.

How the System Works

The vehicle may have a Park Assist amphitheater-like display on the cluster with bars that represent the estimated location of a detected object and the vehicle's distance from the object. As a detected object becomes closer, more bars light up and change color from yellow to amber to red.

When an object is first detected in the rear, an audible alert will be heard from the rear, or the driver's seat will pulse two times, if equipped with Safety Alert Seat. When an object is very close, multiple audible alerts will

sound from the front or rear (depending on the object's location), or the driver's seat will pulse five times. Audible alerts for front are higher pitched than the rear.

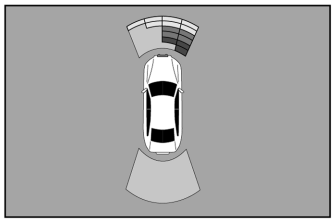

Turning the System On and Off

The Park Assist System can be turned on or off using the infotainment system. To view available settings from the infotainment app screen, touch Settings > Vehicle > Collision/ Detection Systems.

The P button is used to turn on or off the Park Assist, which also turns on or off the Backing Warning and Reverse Automatic Braking at the same time. When the system is turned off, a system off message is shown on the display. This message disappears after a short period of time.

Turn off Park Assist when towing a trailer to prevent unwanted audible alerts and when a bike rack is attached to ensure proper operation.

When the System Does Not Seem to Work Properly

If a service message displays, check the following conditions:

- The sensors may not be clean. Keep the vehicle's front and rear bumpers free of mud, dirt, snow, ice, and slush. For cleaning instructions, see *Exterior Care* ⇨ *330*.
- The Park Assist sensors may be covered by frost or ice. Frost or ice can form around and behind the sensors and may not always be seen; this can occur after washing the vehicle in cold weather. The message may not clear until the frost or ice has melted.

If a service message displays and the above conditions do not exist, take the vehicle to your dealer for repairs.

If the Park Assist System does not activate due to a temporary condition, a system off message is shown on the display. This can occur under the following conditions:

- The driver has disabled the system.
- An object is currently blocking the rear sensors (for example, bike rack, tailgate, trailer hitch, etc.). Once the object is removed, Park Assist will return to normal operation.
- The bumper is damaged. Take the vehicle to your dealer for repairs.
- Other conditions, such as vibrations from a jackhammer or the compression of air brakes on a very large truck, are affecting system performance.

Automatic Parking Assist (APA)

Automatic Parking Assist

⚠ Warning

APA may not always detect objects in the parking space, objects that are not rigid (e.g. shrubs and chain-link fences), objects below the bumper, objects high off the ground (e.g. flatbed trucks), hanging objects, objects below ground level (e.g. large potholes), or moving objects (e.g. pedestrians, cyclists, vehicles). Always verify that the parking space is appropriate

(Continued)

Warning (Continued)

for parking a vehicle. APA may not respond to changes in the parking space, such as movement of an adjacent vehicle, or a person or object entering the parking space. APA does not detect or avoid traffic that is behind or alongside of the vehicle. Always be prepared to stop the vehicle during the parking maneuver.

If equipped, under certain conditions Automatic Parking Assist can use sensors to detect a parking spot, and, under the supervision of the driver, automatically park or unpark the vehicle. The vehicle will control gear selection, steering, acceleration, and braking, at or near idle speeds. The driver must always be prepared to apply braking, as needed. A display and audible alerts help to guide the parking maneuvers.

How to Activate Automatic Parking

To activate Automatic Parking Assist, press P AUTO on the infotainment screen, or P AUTO on the instrument panel. While driving forward at no greater than 30 km/h (18 mph), Automatic Parking Assist searches for parking spots, within the detection range, to the left or right of the vehicle. To search for a parking space to the left, turn on the left turn signal or, if available, change the side selection in the infotainment display. To choose or change the parking mode, make a selection on the infotainment display.

The Automatic Parking Assist feature cannot be used in all empty parking spots. The parking spot must:

- Be sufficiently large to fit the vehicle comfortably.
- Have an adjacent vehicle, wall, or pillar for the system to align to.
- Not be too steep.

After completely passing an eligible parking spot, an audible alert sounds and a notification to stop the vehicle is displayed in the driver information center. Generally, Automatic Parking Assist selects the nearest empty parking spot behind the vehicle, but under some conditions may select a space that is further back. Slow down and bring the vehicle to a complete stop to begin.

Follow the displayed instructions. When the vehicle is ready to begin the maneuver, the steering wheel will vibrate briefly as a reminder to remove hands from the steering wheel. After the vibration stops, check your surroundings and release the brakes to begin automatic parking. As the vehicle maneuvers into the parking spot, continue to check your surroundings. Be prepared to stop to avoid vehicles, pedestrians, or objects.

A progress bar displays the status of the parking maneuver. Once automatic parking is finished and the vehicle has come to a full stop, Automatic Parking Assist will sound an audible alert and display a message indicating parking is complete.

How to Activate Automatic Unparking

To activate Automatic Parking Assist, turn the vehicle on and leave it in P (Park), then press P AUTO on the infotainment screen or the P AUTO button on the instrument panel. A screen will display with unparking options. Like automatic parking, follow the displayed instructions and continue to check your surroundings, being prepared to brake to avoid vehicles, pedestrians, or objects.

Once automatic unparking is finished and the vehicle has come to a full stop, Automatic Parking Assist will display a message

requesting the driver to take control. Press the brakes and take control of the vehicle to drive away.

How to Cancel Automatic Parking/Unparking

To cancel automatic parking or automatic unparking at any time, press P AUTO or X on the infotainment display. Be prepared to resume full control of the vehicle. Automatic Parking Assist holds the vehicle until the parking brake or brake is applied, or the vehicle is shifted into P (Park). To start driving away, press the brakes and shift into D (Drive).

Certain vehicle conditions and driver interferences may also cancel automatic parking:

- The driver manually steers the vehicle.
- The driver shifts gears.
- The driver presses the accelerator pedal.
- There is a failure with the Automatic Parking Assist system.
- The electronic stability control or antilock brakes are activated.
- The parking brake is applied.
- The driver unbuckles the seat belt and opens the door.

System Limitations

Automatic Parking Assist has certain limitations. The system cannot:

- Detect whether a parking space is legal or restricted.
- Detect pavement markings or lines.
- Park in an angled spot.
- Park exactly centered in a very large spot.
- Park in a very narrow spot.
- Always detect short curbs.
- Operate while towing any trailer.
- Operate with certain rear-mounted accessories, such as bike racks.
- Operate on a steep grade.
- Park the vehicle front first.

Reverse Automatic Braking (RAB)

Backing Warning and Reverse Automatic Braking

⚠ Warning

The Reverse Automatic Braking System does not detect children, pedestrians, bicyclists, animals, or objects below the bumper or that are too close or too far from the vehicle. In some situations, such as at higher backing speeds, there may not be enough time for the short, sharp application of the vehicle brake system to occur.

It may not avoid many types of backing crashes. Do not wait for the automatic braking to apply. This system is not designed to replace driver braking and only works in R (Reverse) when an object is detected directly behind the vehicle. It may not brake or stop in time to avoid a crash. It will not brake for objects when the vehicle is moving at very low speeds. The system

(Continued)

Warning (Continued)

will not work correctly under poor visibility or bad weather conditions, such as rain or snow.

To prevent injury, death, or vehicle damage, always check the area around the vehicle and check all mirrors before backing.

Caution

There may be instances where unexpected or undesired automatic braking occurs. If this happens, either press the brake pedal or firmly press the accelerator pedal to release the brakes. Before releasing the brakes, check the Rear Vision Camera and check the area around the vehicle to make sure it is safe to proceed.

If equipped and enabled, when in R (Reverse), Backing Warning alerts of rear objects at vehicle speeds greater than 8 km/h (5 mph) and Reverse Automatic Braking may automatically brake hard at speeds between 1–32 km/h (0.5–20 mph).

To view available settings from the infotainment app screen, touch Settings > Vehicle > Collision/Detection Systems.

The Backing Warning System will provide one audible alert from the rear when an object is first detected, or pulse twice on both sides of the Safety Alert Seat. When the system detects a potential crash, audible alerts will be heard from the rear, or five pulses will be felt on both sides of the Safety Alert Seat. There may also be a brief, sharp application of the brakes.

When the vehicle is in R (Reverse), if the system detects the vehicle is backing too fast to avoid a crash with a detected object behind your vehicle in your path, it may automatically brake hard to a stop to help avoid or reduce the harm caused by a backing crash.

Pressing the brake pedal after the vehicle comes to a stop will release Reverse Automatic Braking. If the brake pedal is not pressed soon after the stop, the electric parking brake may be set. When it is safe, press the accelerator pedal firmly at any time to override Reverse Automatic Braking.

Unexpected braking events are possible with a static installed accessory, such as a bike rack or hitch-mounted cargo carrier.

Rear Pedestrian Alert

If equipped, and under certain conditions, this feature provides alerts to the driver that a pedestrian may be behind the vehicle. This feature only works in R (Reverse) below 12 km/h (8 mph) when the pedestrian is directly behind the vehicle and within the system's range of up to 8 m (26 ft) away during daytime driving. During nighttime driving, feature performance is very limited.

⚠ Warning

Rear Pedestrian Alert does not automatically brake the vehicle. It also does not provide an alert unless it detects a pedestrian, and it may not detect all pedestrians if:

- The pedestrian is not directly behind the vehicle, fully visible to the Rear Vision Camera (RVC), or standing upright.
- The pedestrian is part of a group.
- The pedestrian is a child.
- Visibility is poor, including nighttime conditions, fog, rain, or snow.

(Continued)

Warning (Continued)

- The RVC is blocked by dirt, snow, or ice.
- The RVC, taillights, or back-up lights are not cleaned or in proper working condition.
- The vehicle is not in R (Reverse).

To help avoid death or injury, always check for pedestrians around the vehicle before backing up. Be ready to take action and apply the brakes. See *Defensive Driving* ⇨ 172. Keep the RVC, taillights, and back-up lights clean and in good repair.



Rear Pedestrian Alert Indicator

When a pedestrian is detected within the system's range directly behind the vehicle, this symbol flashes amber on the infotainment display, along with two audible alerts from the rear, and/or if equipped, two pulses from both sides of the driver seat. When a pedestrian is detected close to the vehicle, the symbol flashes red on the infotainment display, along with seven audible alerts from the rear, or if equipped, seven pulses from both sides of the driver seat.

Rear Pedestrian Alert can be set to Off or Alert. To view available settings from the infotainment app screen, touch Settings > Vehicle > Collision/Detection Systems.

If equipped, alerts can be set to audible alerts or seat pulses. To view available settings from the infotainment app screen, touch Settings > Vehicle > Collision/Detection Systems.

Rear Cross Traffic Alert (RCTA) System

⚠ Warning

The Rear Cross Traffic Alert System only operates at speeds greater than 8 km/h (5 mph). It does not detect children, pedestrians, bicyclists, animals, or objects below the bumper or that are too close or too far from the vehicle. In some situations,

(Continued)

Warning (Continued)

such as at higher backing speeds, there may not be enough time for the short, sharp application of the vehicle brake system to occur.

It may not avoid many types of backing crashes. Do not wait for the automatic braking to apply. This system is not designed to replace driver braking and only works in R (Reverse) when an object is detected directly behind the vehicle. It may not brake or stop in time to avoid a crash. It will not brake for objects when the vehicle is moving at very low speeds. The system will not work correctly under poor visibility or bad weather conditions, such as rain or snow.

To prevent injury, death, or vehicle damage, always check the area around the vehicle and check all mirrors before backing.

If equipped, Rear Cross Traffic Alert displays a red warning triangle with a left or right pointing arrow on the infotainment display to warn of traffic coming from the left or right. This system detects objects coming from up to 20 m (65 ft) from the left or right side of

the vehicle. When an object is detected, either three audible alerts sound from the left or right, or three Safety Alert Seat pulses occur on the left or right side, depending on the direction of the detected vehicle.

Use caution while backing up when towing a trailer, as the Rear Cross Traffic Alert detection zones that extend out from the back of the vehicle do not move farther back when a trailer is attached to the vehicle.

Rear Cross Traffic Braking (RCTB)

⚠ Warning

Rear Cross Traffic Braking (RCTB) is an assistance feature only. It does not replace safe, attentive driving. To prevent property damage, injury, or death, always check your surroundings and use your mirrors before backing up. Do not rely solely on RCTB to prevent collisions.

RCTB only operates while the vehicle is in R (Reverse) in a limited speed range.

RCTB may not:

(Continued)

Warning (Continued)

- Detect all vehicles, pedestrians, bicyclists, animals, or objects too close or too far from the vehicle.
- Detect an object if it is partially blocked by an adjacent vehicle or other objects.
- Detect an object when weather limits visibility, such as in fog, rain, or snow.
- Operate when the sensors in the left or right corners of the rear bumper are covered with mud, dirt, snow, slush, ice, etc.
- Operate when a trailer or rear-mounted accessory, such as a bike rack or hitch-mounted cargo carrier, are attached to the vehicle.

RCTB may automatically brake the vehicle suddenly in situations where it is unexpected and undesired. It could respond to guardrails, signs, heavy rain or snow and other non-moving objects. To override RCTB, firmly press the accelerator pedal, if it is safe to do so.

If equipped and enabled, under certain conditions, RCTB may detect objects approaching from the left or right side of the rear of the vehicle. When an approaching object is detected, RCTB displays a red warning triangle with a left- or right-pointing arrow on the infotainment display, and either three audible alerts sound from the, or three pulses occur of the Safety Alert Seat in the direction of the detected object.

RCTB may apply the brake to bring the vehicle to a stop if a collision is imminent. Once stopped, the system may engage the Electric Parking Brake (EPB) to hold the vehicle. Release the EPB or press the accelerator pedal to continue driving, if it is safe to do so.

Driving With a Trailer

Use caution while backing up when towing a trailer. Rear Cross Traffic Alert and Rear Cross Traffic Braking are automatically disabled when a trailer is attached to the vehicle.

Turning the Features On or Off

Rear Cross Traffic Alert and Rear Cross Traffic Braking can be turned on or off using the infotainment system. To view

available settings from the infotainment app screen, touch Settings > Vehicle > Collision/ Detection Systems.

Assistance Systems for Driving

If equipped, when driving the vehicle in a forward gear, Forward Collision Alert, Lane Departure Warning, Lane Keep Assist, Blind Zone Steering Assist, Lane Change Alert, Side Bicyclist Detection, Automatic Emergency Braking, Intersection Automatic Emergency Braking, and/or the Front Pedestrian Braking System can help to avoid a crash or reduce crash damage.

Forward Collision Alert (FCA) System

⚠ Warning

FCA is a warning system and does not apply the brakes. When approaching a slower-moving or stopped vehicle ahead too rapidly, or when following a vehicle too closely, FCA may not provide a warning with enough time to help avoid a crash. It

(Continued)

Warning (Continued)

also may not provide any warning at all. FCA does not warn of pedestrians, animals, signs, guardrails, bridges, construction barrels, or other objects. Be ready to take action and apply the brakes. See *Defensive Driving* ⇨ *172*.

The Forward Collision Alert system may help to avoid or reduce the harm caused by front-end crashes. When approaching a vehicle ahead too quickly, Forward Collision Alert provides a red flashing alert on the windshield and rapidly provides audible alerts or pulses the driver seat. Forward Collision Alert also lights an amber visual alert if following another vehicle much too closely.

The system detects vehicles within a distance of approximately 60 m (197 ft) and operates at all speeds.

This feature can be disabled through vehicle settings. To view available settings from the infotainment app screen, touch Settings > Vehicle > Collision/Detection Systems.

Detecting the Vehicle Ahead

⚠ Warning

FCA does not provide a warning to help avoid a crash, unless it detects a vehicle. FCA may not detect a vehicle ahead if the FCA sensor is blocked by dirt, snow, or ice, or if the windshield is damaged. It may also not detect a vehicle on winding or hilly roads, or in conditions that can limit visibility such as fog, rain, or snow, or if the headlights or windshield are not cleaned or in proper condition. Keep the windshield, headlights, and FCA sensors clean and in good repair.



Forward Collision Alert warnings will not occur unless the system detects a vehicle ahead. When a vehicle is detected, the vehicle ahead indicator will display green. Vehicles may not be detected on curves, highway exit ramps, or hills, due to poor visibility; or if a vehicle ahead

is partially blocked by pedestrians or other objects. Forward Collision Alert will not detect another vehicle ahead until it is completely in the driving lane.

Collision Alert

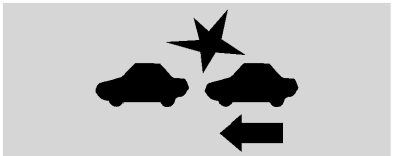

With Head-Up Display (HUD)



Without Head-Up Display (HUD)

When your vehicle approaches another detected vehicle too rapidly, the red Forward Collision Alert display will flash on the windshield. Also, multiple rapid high-pitched audible alerts will sound from the front, or both sides of the Safety Alert Seat will pulse multiple times. When this collision alert occurs, the brake system may prepare for driver braking to occur more rapidly which can cause a brief, mild deceleration. Continue to apply the brake pedal as needed.

Tailgating Alert



The vehicle ahead indicator will display amber when you are following a vehicle ahead much too closely.

Selecting the Alert Timing



The Collision Alert control is on the steering wheel. Press  to set the Forward Collision Alert timing to Far, Medium, or Near. The first button press shows the current setting on the Driver Information Center. Additional button presses will change this setting. The chosen setting will remain until it is changed and will affect the timing of both the Collision Alert and the Tailgating Alert features. The timing of both alerts will vary based on vehicle speed. The faster the vehicle speed, the farther away the alert will occur. Consider traffic and weather conditions when selecting the alert timing. The range of selectable alert timings may not be appropriate for all drivers and driving conditions.

If your vehicle is equipped with Adaptive Cruise Control , changing the Forward Collision Alert timing setting automatically changes the following gap setting (Far, Medium, or Near).

Following Distance Indicator

If equipped, the following distance to a moving vehicle ahead in your path is indicated in following time in seconds on the Driver Information Center. The minimum following time is 0.5 seconds away. If there is no vehicle detected ahead, or the vehicle ahead is out of sensor range, dashes will be displayed.

Unnecessary Alerts

Forward Collision Alert may provide unnecessary alerts for turning vehicles, vehicles in other lanes, objects that are not vehicles, or shadows. These alerts are normal operation and the vehicle does not need service.

Troubleshooting

If the Forward Collision Alert system does not seem to operate properly, this may correct the issue:

- Clean the outside of the windshield in front of the rearview mirror.
- Clean the entire front of the vehicle.
- Clean the headlights.

Automatic Emergency Braking (AEB)

⚠ Warning

AEB is an emergency crash preparation feature and is not designed to avoid crashes. Do not rely on AEB to brake the

(Continued)

Warning (Continued)

vehicle. AEB will not brake outside of its operating speed range and only responds to detected vehicles.

AEB may not:

- Detect a vehicle ahead on winding or hilly roads.
- Detect all vehicles, especially vehicles with a trailer, tractors, muddy vehicles, etc.
- Detect a vehicle when weather limits visibility, such as in fog, rain, or snow.
- Detect a vehicle ahead if it is partially blocked by pedestrians or other objects.

Complete attention is always required while driving, and you should be ready to take action and apply the brakes and/or steer the vehicle to avoid crashes.

⚠ Warning

AEB may automatically brake the vehicle suddenly in situations where it is unexpected and undesired. It could respond to a turning vehicle ahead, guardrails, signs, and other non-moving objects. To override AEB, firmly press the accelerator pedal, if it is safe to do so.

Automatic Emergency Braking may slow the vehicle to a complete stop to try to avoid a potential crash. If this happens, Automatic Emergency Braking may engage the electric parking brake to hold the vehicle at a stop. Release the electric parking brake or firmly press the accelerator pedal.

The system may help avoid or reduce the harm caused by front-end crashes. Automatic Emergency Braking also includes Intelligent Brake Assist. When the system detects a vehicle ahead in your path that is traveling in the same direction that you may be about to crash into, it can provide a boost to braking or automatically brake the vehicle. This can help avoid or lessen the severity of crashes when driving in a forward gear. Depending on the situation, the vehicle may automatically brake

moderately or hard. Always wear a seat belt and ensure that all passengers are properly restrained. This automatic emergency braking can only occur if a vehicle is detected. This is shown by the Forward Collision Alert vehicle ahead indicator being lit. See *Forward Collision Alert (FCA) System* ⇨ *245*.

The system works when driving in a forward gear above 4km/h (2 mph). It can detect vehicles up to approximately 60 m (197 ft).

Intelligent Brake Assist

⚠ Warning

IBA may increase vehicle braking in situations when it may not be necessary. You could block the flow of traffic. If this occurs, take your foot off the brake pedal and then apply the brakes as needed.

⚠ Warning

Using AEB or IBA while towing a trailer could cause you to lose control of the vehicle and crash. Turn the system to Alert or Off when towing a trailer.

Intelligent Brake Assist may activate when the brake pedal is applied quickly by providing a boost to braking based on the speed of approach and distance to a vehicle ahead.

Minor brake pedal pulsations or pedal movement during this time is normal and the brake pedal should continue to be applied as needed. Intelligent Brake Assist will automatically disengage only when the brake pedal is released.

Automatic Emergency Braking and Intelligent Brake Assist can be disabled through vehicle settings. To view available settings from the infotainment app screen, touch Settings > Vehicle > Collision/Detection Systems.

A system unavailable message may display if:

- The front of the vehicle or windshield is not clean.
- Heavy rain or snow is interfering with object detection.
- There is a problem with the StabiliTrak/ Electronic Stability Control system.

The Automatic Emergency Braking system does not need service.

Intersection Automatic Emergency Braking System

⚠ Warning

I-AEB is an emergency crash preparation feature. Do not rely on I-AEB to brake or avoid crashes. I-AEB will not brake outside of its operating speed range and only responds to detected intersecting vehicles. I-AEB may not:

- detect a crossing or oncoming vehicle on winding or hilly roads.
- detect all vehicles, especially vehicles with a trailer, tractors, muddy vehicles, etc.
- detect a vehicle when weather limits visibility, such as in fog, rain, or snow.
- detect a vehicle ahead if it is partially blocked by pedestrians or other objects.

Complete attention is always required while driving, and you should be ready to take action and apply the brakes and/or steer the vehicle to avoid crashes.

If equipped, the Intersection Automatic Emergency Braking system may help avoid or reduce the harm caused by front-end crashes with crossing vehicles.

The system works when driving in a forward gear above 15 km/h (9 mph) and less than 80 km/h (50 mph). It can detect oncoming vehicles up to approximately 60 m (197 ft).

Vehicle Crossing the Path Ahead

When there is a crossing vehicle detected approaching from the right or the left side that may lead to a collision, Intersection Automatic Emergency Braking provides a red flashing alert on the windshield and rapidly provides audible alerts or pulses the Safety Alert Seat. See *Advanced Driver Assistance Systems* ⇨ *234*. Intersection Automatic Emergency Braking can provide a boost to braking or automatically brake the vehicle.

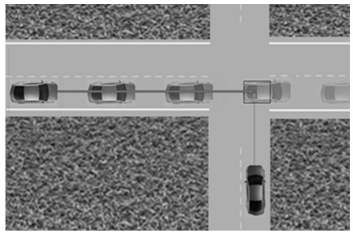

Intersection Automatic Emergency Braking can be set to Off, Alert, or Alert and Brake. To view available settings from the infotainment app screen, touch Settings > Vehicle > Collision/ Detection Systems.

Crossing Traffic Alert

When your vehicle approaches an intersecting vehicle too rapidly and there is risk of a collision, a red warning graphic will flash on the windshield. Also, eight rapid high-pitched audible alerts will sound, or the driver seat will pulse five times. The side of the seat that is pulsed and the location of the audible alerts will depend on the direction that the intersecting vehicle is detected from. When this collision alert occurs, the brake system may prepare for driver braking to occur more rapidly which can cause a brief, mild deceleration. Continue to apply the brake pedal as needed.



With Head-Up Display (HUD)

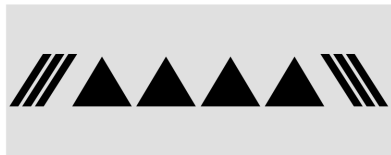

Without Head-Up Display (HUD)

Turning Across Oncoming Traffic Alert

When your vehicle approaches another detected vehicle too rapidly, a red graphic will flash on the windshield. Also, eight rapid high-pitched audible alerts will sound from the front, or both sides of the Safety Alert Seat will pulse five times. When this Collision Alert occurs, the brake system may prepare for driver braking to occur more rapidly which can cause a brief, mild deceleration. Continue to apply the brake pedal as needed.



With Head-Up Display (HUD)

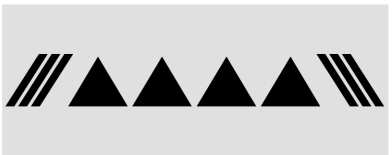

Without Head-Up Display (HUD)

Automatic Braking

⚠ Warning

I-AEB may automatically brake or increase vehicle braking in situations when it may not be necessary or desired. Your vehicle could block the flow of traffic. I-AEB may respond to stationary or parked vehicles, signs, and other non-moving objects. To override AEB, firmly press the accelerator pedal, if it is safe to do so.

⚠ Warning

Using I-AEB while towing a trailer could cause you to lose control of the vehicle and crash. Turn the system to Alert or Off when towing a trailer.

If Intersection Automatic Emergency Braking detects it is about to crash into an intersecting vehicle, and the brakes have not been applied, Intersection Automatic Emergency Braking may automatically brake moderately or hard. This can help to avoid some crashes or lessen impact by reducing the speed of the vehicle. Always wear a seat belt and check that all passengers are properly restrained. Intersection Automatic Emergency Braking can automatically brake between 15 km/h (9 mph) and 80 km/h (50 mph). Automatic braking levels may be reduced under certain conditions, such as higher speeds.

Intersection Automatic Emergency Braking may slow the vehicle to a complete stop to try to avoid a potential crash. If this happens, Intersection Automatic Emergency Braking may engage the electric parking brake to hold the vehicle at a stop. Release the electric parking brake or firmly press the accelerator pedal to continue driving.

Intersection Automatic Emergency Braking may also apply the brakes automatically when there is an intersecting vehicle at risk of collision and the system determines that the driver is not braking with sufficient force.

Minor brake pedal pulsations or pedal movement during this time is normal and the brake pedal should continue to be applied as needed.

Cleaning the System

If Intersection Automatic Emergency Braking does not seem to operate properly, cleaning the outside of the windshield in front of the rearview mirror may correct the issue.

Front Pedestrian Braking (FPB) System

⚠ Warning

FPB does not provide an alert or automatically brake the vehicle, unless it detects a pedestrian or bicyclist. FPB may not detect pedestrians, including children, or bicyclists:

- When the pedestrian or bicyclist is not directly ahead, fully visible, or standing upright, or when part of a group.
- Due to poor visibility, including nighttime conditions, fog, rain, or snow.
- If the FPB sensor is blocked by dirt, snow, or ice.
- If the headlights or windshield are not cleaned or in proper condition.

Be ready to take action and apply the brakes. For more information, see *Defensive Driving* ⇨ *172*. Keep the windshield, headlights, and FPB sensor clean and in good repair.

If equipped, the Front Pedestrian Braking system may help avoid or reduce the harm caused by front-end crashes with pedestrians and bicyclists near the forward path of the vehicle when driving in a forward gear. Front Pedestrian Braking displays an amber indicator, , when a nearby pedestrian or bicyclist is detected ahead. When approaching a detected pedestrian too quickly, Front Pedestrian Braking provides a red flashing alert on the windshield and rapidly provides audible alerts or pulses the driver seat. The system can provide a boost to braking or automatically brake the vehicle. This system includes Intelligent Brake Assist. The Automatic Emergency Braking system may also respond to pedestrians or bicyclists. See *Automatic Emergency Braking (AEB)* ⇨ *247*. Always wear a seat belt and ensure that all passengers are properly restrained.

The Front Pedestrian Braking system can detect and alert to pedestrians or bicyclists in a forward gear at speeds between 8 km/h (5 mph) and 80 km/h (50 mph). During daytime driving, the system detects pedestrians or bicyclists up to a distance of approximately 40 m (131 ft). During nighttime driving, system performance is very limited.

Front Pedestrian Braking can be set to Off, Alert, or Alert and Brake through vehicle settings. To view available settings from the infotainment app screen, touch Settings > Vehicle > Collision/ Detection Systems.

Detecting a Pedestrian Ahead



Front Pedestrian Braking alerts and automatic braking will not occur unless the system detects a pedestrian or bicyclist. The pedestrian ahead indicator will display amber when a pedestrian or bicyclist is detected.

Front Pedestrian Alert



With Head-Up Display (HUD)

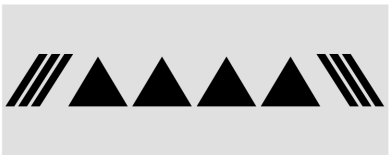

Without Head-Up Display (HUD)

When the vehicle approaches a pedestrian or bicyclist ahead too rapidly, the red Front Pedestrian Braking alert display will flash on the windshield. Many rapid high-pitched audible alerts will sound from the front, or both sides of the Safety Alert Seat will pulse five times. When this Pedestrian Alert occurs, the brake system may prepare for driver braking to occur more rapidly which can cause a brief, mild deceleration. Continue to apply the brake pedal as needed. Cruise control may be disengaged when the Front Pedestrian Alert occurs.

Automatic Braking

⚠ Warning

FPB may alert or automatically brake the vehicle suddenly in situations where it is unexpected and undesired. It could falsely alert or brake for objects similar in shape or size to pedestrians or bicyclists, including shadows. This is normal operation and the vehicle does not need service. To override Automatic Braking, firmly press the accelerator pedal, if it is safe to do so.

⚠ Warning

Using the Front Pedestrian Braking system while towing a trailer could cause you to lose control of the vehicle and crash. Turn the system to Alert or Off when towing a trailer.

If Front Pedestrian Braking detects it is about to crash into a pedestrian or bicyclist directly ahead, and the brakes have not been applied, the system may automatically brake moderately or brake hard. This can help to avoid some very low speed pedestrian or bicyclist crashes or reduce pedestrian injury. Front Pedestrian Braking can automatically brake to detected pedestrians or bicyclist between 8 km/h (5 mph) and 80 km/h (50 mph). Automatic braking levels may be reduced under certain conditions, such as higher speeds.

Front Pedestrian Braking may slow the vehicle to a complete stop to try to avoid a potential collision with a pedestrian or bicyclist. If this happens, Automatic Braking may engage the electric parking brake to hold the vehicle at a stop. A firm press of the accelerator pedal will also release Automatic Braking and the electric parking brake.

Automatic Braking can be disabled through vehicle settings. To view available settings from the infotainment app screen, select Settings > Vehicle > Collision/ Detection Systems.

Troubleshooting

If Front Pedestrian Braking does not seem to operate properly, cleaning the outside of the windshield in front of the rearview mirror may correct the issue.

Lane Change Alert (LCA)

Warning

LCA does not alert the driver to vehicles outside of the system detection zones, pedestrians, bicyclists, or animals. It may not provide alerts when changing lanes under all driving conditions. Failure to use proper care when changing lanes may result in injury, death, or vehicle damage. Before making a lane change, always check mirrors, glance over your shoulder, and use the turn signals.

If equipped, the Lane Change Alert system is a lane-changing aid that assists drivers with avoiding lane change crashes that occur with moving vehicles in the side blind zone (or spot) areas or with vehicles rapidly approaching these areas from behind. The Lane Change Alert warning display will light up in the corresponding outside mirror and will flash if the turn signal is on.

Side Blind Zone Alert is included as part of the Lane Change Alert system.

Lane Change Alert Detection Zones

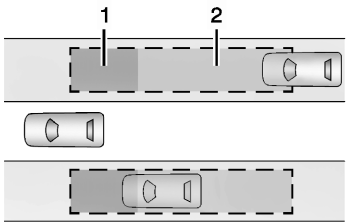

1. Side Blind Zone Alert Detection Zone
2. Lane Change Alert Detection Zone

The Lane Change Alert sensor covers a zone of approximately one lane over from both sides of the vehicle, or 3.5 m (11 ft). The height of the zone is approximately 0.5 m (1.5 ft) and 2 m (6 ft) off the ground. The Side Blind Zone Alert warning area starts at approximately the middle of the vehicle and goes back 5 m (16 ft). Drivers are also warned of vehicles rapidly approaching from up to 70 m (230 ft) behind the vehicle.

How the System Works

The Lane Change Alert symbol lights up in the side mirrors when the system detects a moving vehicle in the next lane over that is in the side blind zone or rapidly approaching that zone from behind. A lit Lane Change Alert symbol indicates it may be unsafe to change lanes. Before making a lane change, check the Lane Change Alert display, check mirrors, glance over your shoulder, and use the turn signals.



Left Side Mirror Display



Right Side Mirror Display

When the vehicle is started, both outside mirror Lane Change Alert displays will briefly come on to indicate the system is operating. When the vehicle is in a forward gear, the left or right side mirror display will light up if a moving vehicle is detected in the next lane over in that blind zone or rapidly approaching that zone. If the turn signal is activated in the same direction as a detected vehicle, this display will flash as an extra warning not to change lanes.

Lane Change Alert can be disabled through vehicle personalization. To view available settings from the infotainment app screen,

select Settings > Vehicle > Collision/Detection Systems. If Lane Change Alert is disabled by the driver, the mirror displays will not light up.

When the System Does Not Seem to Work Properly

The Lane Change Alert system requires some driving for the system to calibrate to maximum performance. This calibration may occur more quickly if the vehicle is driven on a straight highway road with traffic and roadside objects (e.g., guardrails, barriers). During a trip, the Lane Change Alert system is not operational until the vehicle first reaches a speed of 24 km/h (15 mph).

Lane Change Alert displays may not come on when passing a vehicle quickly or for a stopped vehicle. The system may alert to objects attached to the vehicle, such as a bicycle, or object extending out to either side of the vehicle. Attached objects may also interfere with the detection of vehicles. This is normal system operation; the vehicle does not need service.

Lane Change Alert may not always alert the driver to vehicles in the next lane over, especially in wet conditions or when driving on sharp curves. The system does not need to be serviced. The system may light up due to guardrails, signs, trees, shrubs, and other non-moving objects. This is normal system operation; the vehicle does not need service.

Lane Change Alert may not operate when the sensors in the left or right corners of the rear bumper are covered with mud, dirt, snow, ice, or slush, or in heavy rainstorms. For cleaning instructions, see "Washing the Vehicle" under *Exterior Care* ⇨ *330*. If the Driver Information Center still displays the system unavailable message after cleaning both sides of the vehicle toward the rear corners of the vehicle, see your dealer.

If the Lane Change Alert displays do not light up when moving vehicles are in the side blind zone or rapidly approaching this zone and the system is clean, the system may need service. Take the vehicle to your dealer.

Driving with a Trailer

The Lane Change Alert detection zones that extend back from the side of the vehicle do not move further back when a trailer is towed.

Use caution while changing lanes when towing a trailer.

Side Bicycle Detection

If equipped, the system may detect a bicyclist approaching from the side or rear of the vehicle.

If this occurs, an audible alert will sound in the direction of the detection, and the Safety Alert Seat will pulse if enabled through vehicle settings. To view available settings from the infotainment app screen, select Settings > Vehicle > Collision/Detection Systems.

Bicyclist Detection is available when the vehicle is in D (Drive), P (Park), and for a short time after the vehicle is turned off.

If the vehicle detects a bicyclist when it is off, a Driver Information Center message may display and alert to the direction of the detection. In some cases, an Unavailable message may display. This is normal and does not mean that the system is broken.

Detection Zones

When the vehicle is in P (Park) or is turned off, a bicyclist can be detected 11 m (36 ft) behind the vehicle or 10 m (33 ft) to the side of the vehicle.

When the vehicle is in D (Drive), a bicyclist can be detected 3 m (10 ft) behind the vehicle or to the side of the vehicle.

Turning the Feature On or Off

Bicyclist Detection can be turned on or off through vehicle settings. To view available settings from the infotainment app screen, select Settings > Vehicle > Collision/ Detection Systems.

Blind Zone Steering Assist (BZSA)

⚠ Warning

Do not rely on Blind Zone Steering Assist (BZSA) to prevent crashes. This system does not replace the need to pay attention and drive safely. Failure to use proper care when driving may result in vehicle damage, injury, or death.

- BZSA performance may be affected by weather and road conditions.
- BZSA does not provide steering assistance to avoid a vehicle that is in, or has entered, your lane of travel.
- BZSA will not prevent a towed trailer from crossing into the adjacent lane. Always monitor the trailer position

(Continued)

Warning (Continued)

while towing to ensure it is in the same lane as your vehicle. BZSA is only designed to detect when your vehicle unintentionally crosses detected lane lines.

If equipped, the Blind Zone Steering Assist system can detect a potential crash with a moving vehicle in the lane you are entering. It provides a brief, urgent turn of the steering wheel to alert you to take action to avoid a collision.

Blind Zone Steering Assist works with Lane Keep Assist and Lane Change Alert. Blind Zone Steering Assist operates when the vehicle is in a forward gear, and only when Lane Keep Assist and Lane Change Alert are enabled and able to assist. See *Lane Keep Assist (LKA)* ⇨ *258*. See *Lane Change Alert (LCA)* ⇨ *253*.

Blind Zone Steering Assist will provide a steering correction when your vehicle is about to leave the current lane of travel, with the possibility of a collision with a vehicle in the adjacent lane. This steering correction happens closer to the center of the lane and has a stronger steering correction than Lane Keep Assist. Unlike Lane Keep Assist, the steering correction with Blind Zone Steering Assist will happen even if your turn signal is on in the direction of lane departure.

In addition to the Blind Zone Steering Assist steering intervention, the  will turn amber, six audible alerts or six seat pulses will occur, if equipped with Safety Alert Seat, and  or  will flash on the outside rear view mirror.

Traffic Sign Assistant

If equipped, Traffic Sign Assistant recognizes designated traffic signs via the front camera located behind the windshield in front of the interior rear view mirror, and displays the detected speed limit in the Driver Information Center or instrument cluster. Traffic Sign Assistant requires an active OnStar subscription. Additionally, speed limit information from the navigation system map database may be used.

Caution

The system is intended to assist the driver within a defined speed range to discern certain traffic signs. Always pay attention to posted speed limit signs.

Do not ignore traffic signs which are not displayed by the system.

The system does not discern any signs other than the conventional traffic signs that might give or end a speed limit. It may not detect some electronic speed signs.

Depending on the weather conditions or problems with traffic signs, a traffic sign may not be recognized or a sign different from the actual traffic sign may be displayed.

Do not let this special feature tempt you into taking risks when driving.

Always adapt vehicle speed to the road conditions.

Advanced driver assistance systems do not relieve the driver from full responsibility for vehicle operation.

Traffic signs that are detected are:

- Speed Limit
- Constraint Signs

Display Indication

The current valid speed limit is permanently displayed in the Driver Information Center or instrument cluster, depending on the vehicle.

A **(--)** symbol in a frame indicates there is a sign detected which cannot be clearly identified by the system.

A **(/)** symbol in a frame indicates that the feature is turned off or has failed.

See *Instrument Cluster* ⇨ *93*.

Alert Function

If equipped, an audible alert may sound when you have exceeded the indicated speed limit, or if a new speed limit is detected.

The alert function can be turned on or off. To view available settings from the infotainment screen, touch Settings > Display > Instrument Cluster.

Each time the vehicle is started, the customization options will be turned on.

System Reset

The content of the traffic sign display can be cleared. To view available settings from the infotainment screen, touch Settings > Display > Instrument Cluster.

Upon successful reset, a **(--)** symbol displays until the next traffic sign is detected or provided by the navigation system map data. In some cases, traffic sign memory is cleared automatically by the system.

Alert function will automatically be turned on when the system is reset.

Navigation System Traffic Sign Detection

The currently displayed sign can either originate from sign detection using the camera, or from the navigation system map data. If the currently displayed sign originates from map data and the map information changes, a new sign will be displayed. This may lead to detection of a new sign although no sign on the road may have been passed. If the map data is unavailable, Traffic Sign Assistant will turn off automatically.

Limitations

Traffic sign memory may not operate correctly if:

- The area of the windshield, where the front camera is located, is not clean or is affected by foreign objects, e.g. stickers, window tinting, etc.
- Traffic signs are completely or partially covered, are too low or high or difficult to discern.
- Traffic signs are incorrectly mounted or are damaged.
- Traffic signs do not comply with the approved traffic sign standards.
- The speed limit is displayed by certain types of electronic speed signs.
- There are adverse environmental conditions, e.g. heavy rain, snow, direct sunlight or shadows.
- The headlights are dirty or not correctly aligned when driving at night.
- The navigation map data is out of date.
- The navigation map is unavailable.

Driver Attention Assist

If equipped, Driver Attention Assist alerts the driver to pay closer attention to the road ahead. Driver Attention Assist uses a camera-based Driver Monitoring System. The Driver Monitoring System on the steering column continually monitors the driver's head movements and eye gaze location to determine if the driver is drowsy or distracted. Depending on the level of the driver's distraction or drowsiness, Driver Attention Assist will provide visual warnings, audible alerts, and Safety Alert Seat vibrations, if equipped, to gently guide the driver to refocus on the driving task.

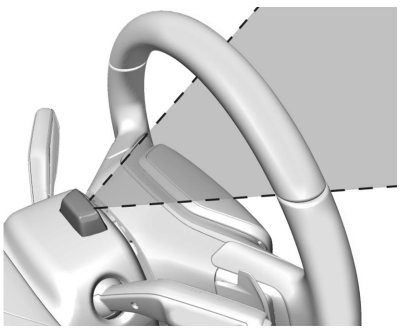

Sunglasses, hats, or other types of clothing that cover head or facial features may interfere with camera performance. To improve camera performance, raise or lower the steering wheel, wear lighter tinted glasses, or change the seat position.

Driver Attention Assist does not record video or audio. It is only active while driving with the feature enabled.

How to Activate Driver Attention Assist

The feature can be enabled or disabled through vehicle settings. To view available settings from the infotainment app screen, select Settings > Vehicle > Driver Attention Assist.

Distracted Driving

When the driver's attention is not on the road, Driver Attention Assist will send visual and audible alerts, or Safety Alert Seat vibrations.

If the driver does not return their attention to the road ahead and displays unresponsive behavior, the system will engage multiple Advanced Driver Assistance Systems, bring the vehicle to a stop, and call OnStar Emergency to get aid to the driver as soon as possible. See *Lane Keep Assist (LKA)* ⇨ *258* and *Automatic Emergency Braking (AEB)* ⇨ *247*.

Drowsy Driving

The system monitors the driver for signs of fatigue, such as yawning, slower blinking frequency, or gaze fixation. Driver Attention Assist provides visual and audible alerts, or Safety Alert Seat vibrations. When the system detects that the driver is greatly struggling to stay awake, the alerts will be more intense and frequent. While a driver is detected to be only be drowsy, Driver Attention Assist may activate or adjust settings for Advanced Driver Assistance Systems, even if they have been disabled, only for the duration that the drowsiness is detected. The activated features will revert to their previous selections once the driver is no longer detected to be showing signs of fatigue.

When the maximum drowsiness alert occurs, the driver will be presented with the following options on the infotainment screen:

- Phone a Friend
- Start a Playlist
- Navigate to Nearest Point of Interest

Select an option from the list and follow the instructions displayed on infotainment screen.

If the driver's eyes are closed, and they are detected to be asleep, the system will engage multiple Advanced Driver Assistance Systems, bring the vehicle to a stop, and call OnStar Emergency to get aid to the driver as soon as possible.

See *Lane Keep Assist (LKA)* ⇨ *258* and *Automatic Emergency Braking (AEB)* ⇨ *247*.

Cleaning the Camera

The camera lens cover on the steering column may become dirty over time. If this occurs, clean the lens cover with a soft cloth sprayed with glass cleaner. Wipe the lens gently, then dry it. Never use abrasive cloths, cleaners, or corrosive chemicals of any kind on the lens cover.

Limitations

Some factors can impact the performance of the Driver Attention Assist feature, causing it to not to function as intended. These include (but are not limited to):

- Damage to the Driver Monitoring System, camera, or lens.
- The camera being blocked by the steering wheel, hands, or objects.

If there is a problem with the system, a Driver Information Center message or icon in the instrument cluster may display.

Lane Keep Assist (LKA)

⚠ Warning

The LKA system does not continuously steer the vehicle. It may not keep the vehicle in the lane or give a Lane Departure Warning (LDW) alert, even if a lane marking is detected.

The LKA and LDW systems may not:

- Provide an alert or enough steering assist to avoid a lane departure or crash.
- Detect lane markings under poor weather or visibility conditions. This can occur if the windshield or headlights are blocked by dirt, snow, or ice, if they are not in proper condition, or if the sun shines directly into the camera.
- Detect road edges.
- Detect lanes on winding or hilly roads.

(Continued)

Warning (Continued)

If LKA only detects lane markings on one side of the road, it will only assist or provide an LDW alert when approaching the lane on the side where it has detected a lane marking. Even with LKA and LDW, you must steer the vehicle. Always keep your attention on the road and maintain proper vehicle position within the lane, or vehicle damage, injury, or death could occur. Always keep the windshield, headlights, and camera sensors clean and in good repair. Do not use LKA in bad weather conditions.

⚠ Warning

Using LKA while towing a trailer or on slippery roads could cause loss of control of the vehicle and a crash. Turn the system off.

If equipped, Lane Keep Assist may help avoid crashes due to unintentional lane departures. This system uses a camera to detect lane markings. The Lane Keep Assist system can be ready to assist above approximately 50 km/h (31 mph). Lane Keep Assist may assist by gently turning the steering wheel if the vehicle approaches a detected lane marking. It may also provide a Lane Departure Warning alert if the vehicle unintentionally crosses a detected lane marking. Lane Keep Assist will not assist or alert if the turn signal is active in the direction of the lane departure, or if it detects that you are accelerating, braking, or actively steering. Lane Keep Assist can be overridden by turning the steering wheel. If the system detects you are steering intentionally across a lane marker, the Lane Departure Warning may not be given. Do not expect the Lane Departure Warning to occur when you are intentionally crossing a lane marker.

How the System Works

The Lane Keep Assist camera sensor is on the windshield ahead of the rearview mirror.

To turn Lane Keep Assist on and off, press on the instrument panel to the left of the steering wheel.

Lane Keep Assist may not be available in extremely cold temperatures of less than approximately −30° F (−34° C).

When on, / \ is white and changes green if Lane Keep Assist is available to assist and provide Lane Departure Warning alerts. It may assist by gently turning the steering wheel and display / \ as amber if the vehicle approaches a detected lane marking without using a turn signal in that direction. It may also provide an Lane Departure Warning alert by flashing / \ amber as the lane marking is crossed. Additionally, there may be three audible alerts on the right or left, depending on the lane departure direction.

Take Steering

The Lane Keep Assist system does not continuously steer the vehicle. If Lane Keep Assist does not detect active driver steering, an audible alert or Driver Information Center message may be provided. Move the steering wheel to dismiss.

When the System Does Not Seem to Work Properly

The system performance may be affected by:

- Close vehicles ahead.
- Sudden lighting changes, such as when driving through tunnels.

- Banked roads.
- Roads with poor lane markings, such as two-lane roads.

If the Lane Keep Assist system is not functioning properly when lane markings are clearly visible, cleaning the windshield may help.

A system unavailable message may display if the camera is blocked. The Lane Keep Assist system does not need service.

Lane Keep Assist assistance and/or Lane Departure Warning alerts may occur due to tar marks, shadows, cracks in the road, temporary or construction lane markings, or other road imperfections. This is normal system operation; the vehicle does not need service. Turn Lane Keep Assist off if these conditions continue.

Surround Vision Recorder

If equipped, Surround Vision Recorder may record video of the vehicle surroundings continuously, up to two hours, while automatically overwriting the oldest videos to continue recording.

When the feature is enabled, the recordings are saved on a USB device with the specifications of:

- 64GB storage capacity, with at least 32GB of storage available.
- A FAT32 file system. MS-DOS (FAT) should be used for Mac.
- USB type C or A.
- USB3.0 or greater.

It is recommended to use a single USB device specifically for Surround Vision Recorder.

Event recording features may be offered after a future software update to your vehicle. When available, you will learn about the new features through the application.

Security Recording

If Security Recording is enabled, the cameras automatically record the vehicle's exterior and, when selected in settings, the interior when the theft alarm is triggered. This recording will be a video of when the alarm becomes activated.

Configuring the System

To access settings, and the recordings playlist, select Recordings on the infotainment app screen.

Always review the settings carefully before use.

Limitations

Certain features may not be available at all locations and under all vehicle conditions. No sound is included in the video footage.

Features are subject to change. Some features may be enabled with an additional subscription service. You will be informed which features apply after the software update.

When using Surround Vision Recorder, follow all local laws and regulations in your jurisdiction.

Untrusted Media Devices

Do not use untrusted mobile or media devices. They may negatively impact system operation and performance.

Charging

When to Charge

When the high voltage battery is low, an amber warning light may appear and the following charging messages may display on the Driver Information Center:

CHARGE VEHICLE SOON : Charge the battery as soon as possible.

REDUCED ACCELERATION DRIVE WITH CARE : There is reduced accelerator pedal response and the remaining range value changes to LOW. Charge the vehicle immediately. See *Propulsion Power Messages* ⇨ *119*.

OUT OF ENERGY, CHARGE VEHICLE NOW : The battery charge is fully depleted. The vehicle will slow to a stop. Brake and steering assist will continue operating. Once stopped, turn the vehicle off.

Plug-In Charging

Caution

To avoid damage to the vehicle, make sure the charging cord plug is in good condition, is not worn or damaged, and is connected securely to the vehicle's charging port. If vehicle charging is intermittent, disconnect the cord and inspect for damage. An excessively worn or damaged AC or DC charging cord plug may result in an intermittent connection and potential damage to the vehicle's charging port.

Plug-in charge times vary based on the battery condition, charge level, outside temperature, and charge station capability. See *Charging* ⇨ *107* for charge mode selection.

Do not allow the vehicle to remain in temperature extremes for long periods without being driven or plugged in. When temperatures are below 0 °C (32 °F) and above 32 °C (90 °F), plug in the vehicle to maximize high voltage battery life.

In extreme temperature conditions, a full charge will take additional time.

Charging slows down as the battery recharges. Charge the battery to 80% for daily driving, or when driving in mountainous terrain. The vehicle can be charged above 80% for long trips when not driving in mountainous terrain.

GM recommends the following:

- Unless your drive requires a full charge, charge the high voltage battery to 80% or less.
- Avoid allowing the high voltage battery to fall below 20% charged, if possible. See *Battery - North America* ⇨ *290*.
- If your route includes steep mountain terrain or if you are towing a trailer, it is important that your battery charge level is 80% or less to maximize regenerative braking performance.

It is normal to hear fans, pumps, and electrical devices clicking while the vehicle is turned off and charging.

The vehicle does not require indoor charging area ventilation before, during, or after charging.

Do not drive the vehicle while the charge cord is plugged in.

If 12-volt battery power is lost, do not attempt to manually open the charge port door. The charge port does not charge the 12-volt battery. Once the 12-volt battery is recharged or jumped, the charge port door can be opened and the vehicle can be charged.

⚠ Warning

Use of unapproved charge cord adapters may cause electrical overheating, resulting in vehicle damage or personal injury. Only use GM-approved adapters with the charge

(Continued)

Warning (Continued)

cord. If you use an adapter which is not sold, provided, or approved by GM and it causes damage to your vehicle, the repair will not be covered by the vehicle warranty.

To charge your vehicle, it may be necessary to use a special adapter to match the format of the charger. The adapter is a device that connects the charger to the vehicle. Use an adaptor when the connectors are different, for example, when the charger is a Combined Charging System (CCS) and the EV has the North American Charging Standard (NACS) inlet.

Charging Override

A CHARGING OVERRIDE/INTERRUPTION OCCURRED message may display to indicate that a charging override or interruption has occurred due to one or more of the following events:

- Override of the charge settings by the owner
- Unintended interruption of AC power at the vehicle's charge port
- Interruption of charging by the utility company

AC Charging

For safety information, see *Plug-In Charging* ⇨ *261*.

⚠ Warning

Do not use the charging station if the handle has defects such as cracks, exposed wires, burnt or missing pins, or any other damage. A damaged handle may result in personal injury and/or damage to the vehicle, the charging port or other property.

AC charging is slower than DC charging and ideal for everyday and overnight charging.

If AC power is lost for over one minute, an audible alert, if equipped, may sound briefly. To turn this audible alert off, see *Charging* ⇨ *107*.



AC Charge Cord Vehicle Plug

To Start AC Charging

1. Put the vehicle in P (Park).

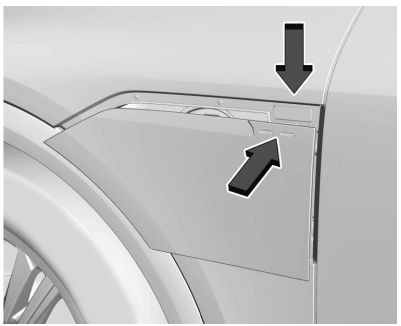

2. Push and release the top right corner of the charge port door to open it.

In cold weather conditions, ice may form around the charge port door. Remove ice from the area before attempting to open or close the charge port door by sliding a thin plastic card in the small gap around the charge port door's edge.

If ice buildup is too thick to break with a plastic card, lightly push the door at several points around the door's edge to crack the obstruction.

3. Plug the charge cord into the electrical outlet. To verify the charge cord status, see *Electrical Requirements for Battery Charging* ⇨ *278* and *Installing and Operating the Charge Cord* ⇨ *273*. For instructions to set cord limit settings for a charge session, see *Charging* ⇨ *107*.
4. Plug the charge cord into the vehicle charge port. Make sure that the vehicle plug is fully connected to the charge port. If it is not properly connected, the vehicle may not charge. Check the Driver Information Center to make sure the vehicle plug is connected properly.
5. Follow the steps on the charging station to start the charge. If no instructions are present, the charge may need to be started via the mobile application or on the infotainment charging screen. See *Charging* ⇨ *107*. When charging is active, the vehicle plug is locked to the charge port and cannot be disconnected.
6. Verify that the charge status light turns on and an audible alert sounds. See *Charging Status Feedback* ⇨ *266*.

To End AC Charging

When the vehicle is fully charged, charging automatically stops.

To Manually End AC Charging at Any Time

- Use the controls on the charging station.
- On the infotainment screen inside the vehicle, press the Stop Charge button on the Charging screen. See "Active Charging" under *Charging* ⇨ *107*.

To Remove the Charge Cord

1. Press the button on the top of the charge cord plug to unlock it. Unplug the charge cord from the vehicle.

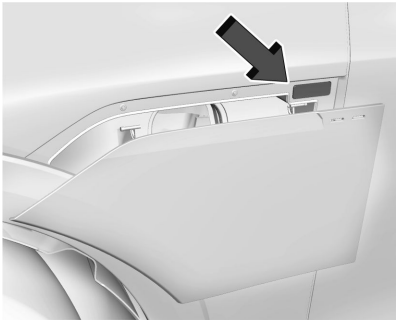

2. Press the button to manually close the charge port door or the door will automatically close when you shift out of P (Park).
3. Unplug the charge cord from the electrical outlet.
4. Place the charge cord into the storage compartment.

If the vehicle plug is stuck or does not release normally, see "Emergency Manual Charge Cord Release" under *DC Charging* ⇨ *264*.

DC Charging

For safety information, see *Plug-In Charging* ⇨ *261*.

DC Charging Station Hardware

⚠ Warning

Do not use the charging station if the handle has defects such as cracks, exposed wires, burnt or missing pins, or any other damage. A damaged handle may result in personal injury and/or damage to the vehicle, the charging port or other property.

DC charging is quicker than AC charging. DC charging equipment is typically at service stations and other public locations.



DC Charge Cord Vehicle Plug

Your vehicle is compatible with a North American Charging Standard (NACS) connector.

When charging at a DC charge station, the charging cable connected to the vehicle shall be less than 10 m (33 ft) in length to meet functionality and regulatory requirements.

For maximum charging performance, and to prevent charging interruptions or damage to the high voltage battery and vehicle:

- Once you have plugged in the charging handle, remove your hands from the handle to avoid a charging interruption.
- Ensure that the charge cord plug is fully seated in the charge inlet.

Before DC Charging

If equipped, Fast Charge Prep adjusts the battery to the optimal temperature for quicker DC charging. When you add a DC charge station to your route on Google Maps, the Fast Charge Prep feature will begin automatically. If you do not add a station to your route but plan to use a DC fast charger, on the infotainment app screen, select Charging > Charge Settings > Fast Charge Prep > Start approximately 30 minutes before you begin charging. See *Charging* ⇨ *107*.

To Start DC Charging

Caution

Do not attempt to disconnect the DC vehicle plug while charging is active. This action may damage the vehicle or charging station hardware.

1. Put the vehicle in P (Park).



2. Push and release the top right corner of the charge port door to open it.

   In cold weather conditions, ice may form around the charge port door. Remove ice from the area before attempting to open or close the charge port door by sliding a thin plastic card in the small gap around the charge port door's edge.

   If ice buildup is too thick to break with a plastic card, lightly push the door at several points around the door's edge to crack the obstruction.

3. Plug the charge cord into the vehicle charge port. Make sure that the vehicle plug is fully connected to the charge port. If it is not properly connected, the vehicle may not charge. Check the Driver Information Center to make sure the vehicle plug is connected properly.

4. Follow the steps listed on the charging station to start the charge. If no instructions are present, the charge may need to be started via the mobile application or on the infotainment charging screen. See *Charging* ⇨ *107*. When charging is active, the vehicle plug is locked to the charge port and cannot be disconnected.

5. Verify that the charge status light turns on and an audible alert sounds. See *Charging Status Feedback* ⇨ *266*.

If DC charging does not begin or is interrupted, check the DC charging station display for messages. Unplug the cord to restart the DC charging process.

To End DC Charging

When the vehicle is fully charged, charging automatically stops and the plug unlocks.

To Manually End DC Charging at Any Time

- Press the button on the DC vehicle plug.
- Use the controls on the charging station.
- On the infotainment screen inside the vehicle, press the Stop Charge button on the Charging screen. See "Active Charging" under *Charging* ⇨ *107*.

If the vehicle plug does not unlock from the vehicle charge port after a charge, contact Roadside Assistance or use the Emergency Manual Release cable. See *Roadside Assistance Program* ⇨ *352* and "Emergency Manual Charge Cord Release" later in this section.

To Remove the Charge Cord

1. Unplug the vehicle plug from the charge port on the vehicle.

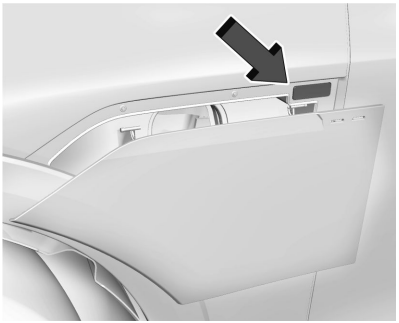

2. Press the button to manually close the charge port door or the door will automatically close after you shift out of P (Park).

Emergency Manual Charge Cord Release

⚠ Warning

The emergency manual charge cord release should only be used to release a vehicle charge plug that is stuck in the charge port. To avoid the risk of personal injury, death, or property damage, do not attempt to use the release, or additional tools, to forcibly insert a charge plug into the port. Use a different plug or see your dealer for service.

This vehicle is equipped with an Emergency Manual Release cable if the vehicle plug is stuck or does not release normally.

1. Open the hood. See *Hood* ⇨ *283*.

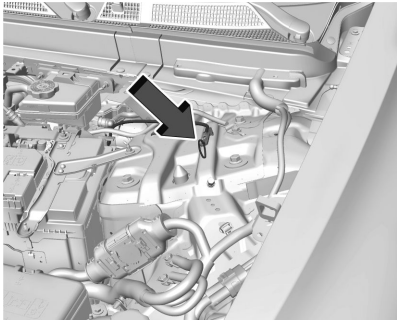

2. Pull the Emergency Manual Release cable handle. The lock pin in the charge cord will release.

Delayed Charging Override

To override a delayed charge event, unplug the charge cord from the charge port and then plug it back in within five seconds. A single audible alert will sound and charging will begin immediately.

To cancel an override, unplug the charge cord, wait for 10 seconds, and then plug the charge cord back in. A double audible alert will sound and delayed charging will resume.

See *Charging* ⇨ *107* for advanced charge scheduling options.

Charging Status Feedback

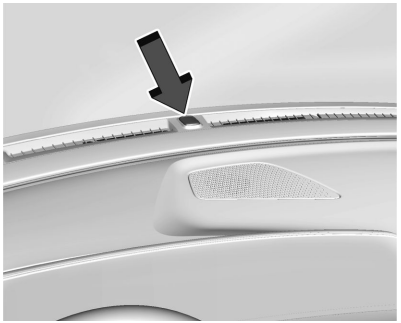

The vehicle is equipped with a charge status light.

When the charge cord is plugged in, a color appears to indicate the charging status.

Refer to the table for charging status feedback:

Charge Status Light Color	Sound	Action/Reason
Solid Blue	None	Initial connection is successful.
Pulsing Blue	Two audible alerts	Charging is delayed by charging screen or by a total utility interruption or override. Charging will begin later. See *Utility Interruption of Charging* ⇨ *278*.
Blinking Green (the longer the blink, the higher the state of charge)	One audible alert	Vehicle is actively charging.
Solid Green	None	Charging is complete.
Pulsing Red	None	Error or charging has not initialized at the charging station. Check the charge cord connection. There may be no power supplied to the vehicle. Follow the instructions at the charging station to initialize charging.

Charge Status Light Color	Sound	Action/Reason
None (upon plug-in)	None	Check the charge cord connection.
None (after blue and green lights up)	None	Check the charge cord connection. If the connection is good, this may indicate a power failure or a total utility interruption, and charging will begin later. It may also occur if a high voltage charging system fault is detected. See *Utility Interruption of Charging* ⇨ *278* or *Service Vehicle Soon Light (Propulsion System Failure)* ⇨ *100*.
None	Three audible alerts when the driver door is opened	The charge port door is open.

Charge Status Light Color	Sound	Action/Reason
Flashing Green (the longer the blink, the higher the state of charge)	Four audible alerts	The currently set departure time cannot be met. May be due to charging power level or charge schedule setting factors. Refer to the charging screen for actual charge completion time. See *Charging* ⇨ *107*.
Pulsing Green	One audible alert	The vehicle is actively discharging through the vehicle to vehicle cord.
None	Four audible alerts	When using Persistent Power, the vehicle is approaching the Range Reserve Limit or the Timer (if enabled) to end the session.

Charge Cord

INSTRUCTIONS PERTAINING TO A RISK OF FIRE OR ELECTRIC SHOCK

IMPORTANT SAFETY INSTRUCTIONS

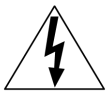

⚠ Danger

This symbol indicates risk of electrical shock.

If anything on the charge cord is broken, do not touch components with this symbol. To avoid injury, do not touch any metal on the charge cord as this could cause electrical current to flow to your body.

The vehicle may come with a portable charge cord for charging the high voltage battery. When used correctly, the charge cord provides a safe connection between a standard electrical outlet and your vehicle's on-board charger.

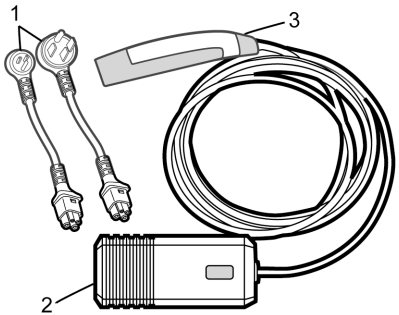

1. Low and High Power Swappable Connectors Based on Region
2. Charge Cord Control Box and Charge Cord Status Indicator
3. Charge Cord Vehicle Plug

Read this section carefully before using the charge cord and save these instructions.

Important Information about Portable Electric Vehicle Charging

⚠ Warning

When using electric products, basic precautions should always be followed, including the following:

- Read all the safety warnings and instructions before using this product. Failure to follow the warnings and the instructions may result in electric shock, fire, and/or serious injury.
- Never leave children unattended near the vehicle while the vehicle is charging and never allow children to play with the charge cord.
- If the plug provided does not fit the electrical outlet, do not modify the plug. Arrange for a qualified electrician to inspect the electrical outlet.
- Do not put fingers into the electric vehicle connector.

⚠ Warning

Improper use of portable electric vehicle charge cords may cause a fire, electrical shock, or burns, and may result in damage to property, serious injury, or death.

- Do not use extension cords, multi-outlet power strips, splitters, grounding adapters, surge protectors, or similar devices.
- Do not use an electrical outlet that is worn or damaged, or will not hold the plug firmly in place.
- Do not use an electrical outlet that is not properly grounded.
- Do not use an electrical outlet that is on a circuit with other electrical loads.
- Do not wrap the charge cord around the housing of the control box.

⚠ Warning

- To reduce the risk of fire, installations shall comply with the requirements of National Electric Code, ANSI/NFPA 70 (USA), Canadian Electrical Code CSA 22.1 and IEC 60364 – Electrical installations in buildings, depending on the region in which the unit is being installed. The installer shall comply with any additional local requirements mandated by the country and/or municipality.
- Do not use this product if the flexible power cord or the electric vehicle cable is frayed, has broken insulation, or shows any other signs of damage.
- For Canada only: Not for use in commercial garages.
- Do not use this product if the enclosure or the vehicle plug is broken, cracked, open, or shows any other indication of damage.

(Continued)

Warning (Continued)

- The plug must be plugged into an appropriate electrical outlet that is properly installed in accordance with all local codes and ordinances. Do not modify the plug provided with the product. If the plug does not fit the electrical outlet, have a proper electrical outlet installed by a qualified electrician. If ground is missing, the charge cord indicators will indicate an electrical system fault and the vehicle may not charge.

⚠ Warning

Connecting charging components incorrectly or to a damaged outlet can cause vehicle or property damage, personal injury, or death. When charging your vehicle, ensure all components are connected properly, there is no damage, and the outlet has power.

⚠ Warning

Disconnecting the charge cord from the grid outlet while charging can result in damage and/or injury. Do not disconnect while the vehicle while charging.

⚠ Warning

Water, moisture, and other foreign objects can pose a risk when using the charge cord. When charging outdoors, plug into an electrical outlet that is weatherproof and avoid situations where water can run along the charge cord to the vehicle inlet or the grid outlet. Do not place the control box and charge cord in a location where it may be submerged in water. Do not use the charge cord in severe weather conditions.

⚠ Warning

Check the electrical outlet/plug while charging and discontinue use if the electrical outlet/plug appears hot. Using

(Continued)

Warning (Continued)

a hot electrical outlet/plug could result in vehicle or property damage, personal injury, or death. Have the electrical outlet serviced by a qualified electrician.

⚠ Warning

Water, moisture, and other foreign objects can damage the portable charge cord. Damage to the charge cord could result in electrical malfunction, vehicle damage, electrical shock, or death. Protect the portable charge cord against water, moisture and foreign objects at all times.

Caution

Coiling or storing the charge cord in a location it may be crushed or forced into space to form a circle smaller than 178 mm (7 in) can damage the cord. Avoid restricting the charge cord rotation or applying excessive pulling force while wrapping.

Caution

Using non-approved electrical sources to charge can cause damage to the charging system. Do not attempt to use the charge cord with non-utility supplied electrical power sources such as backup generating equipment.

Caution

Electrical outlets may wear out with normal usage or may be damaged over time making them unsuitable for electric vehicle charging. Regularly inspect outlets for wear and tear. Do not use if worn or damaged.

Before plugging the charge cord into any electrical outlet, have a qualified electrician inspect and verify the electrical system (electrical outlet, wiring, junctions, and protection devices) is suitable for a heavy-duty service.

Charge Cord Specifications

Voltage: 85–265 volts, AC single phase/split phase only

Frequency: 45–66 Hz
Enclosure: NEMA 4X
Current: Max 32 amps (Grid plug specific)
NEMA 5–15P Max Cordset: 12 amps
NEMA 14–50P Max Cordset: 32 amps
See *Installing and Operating the Charge Cord* ⇨ *273* and *Charge Cord Troubleshooting and Maintenance* ⇨ *277* for more information.

Installing and Operating the Charge Cord

For safety information, see *Charge Cord* ⇨ *270*.

Grounding Instructions

⚠ Warning

Improper connection of the charge cord ground may cause electrical shock. Check with a qualified electrician if there is doubt as to whether the charge circuit is properly grounded. Do not modify the plug provided with the product. If it will not fit the electrical outlet, have a proper electrical outlet installed by a qualified electrician.

The charge circuit must be grounded. If the charge circuit should malfunction or break down, grounding provides a path of least resistance for the electric current to reduce the risk of electric shock. Your charge cord has an equipment grounding conductor and a grounding plug. The plug must be plugged into an appropriate outlet that is properly installed and grounded in accordance with all local codes and ordinances.

The charge cord must be on a dedicated individual branch circuit. A dedicated circuit ensures that there is enough power available without overloading the system.

If you do not use a dedicated circuit, the circuit breaker could trip or open. If a dedicated circuit is not available, contact a qualified electrician.

Connecting the Charge Cord

The charge cord must operate at a temperature between -30 °C (-22 °F) and 50 °C (122 °F).

To connect the charge cord:

1. Snap the desired connectors into the control box before making any other connections.



Align the pins and push firmly until you hear the connector snap into place. Ensure you cannot see any glossy black hard plastic. If the connector is not fully inserted into the control box the charge cord will not work properly.

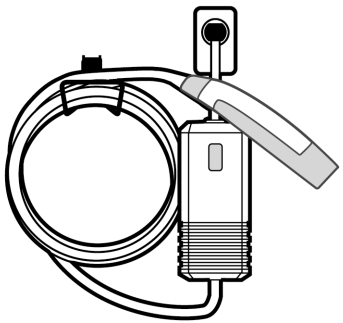

2. Mount the charge cord to reduce strain on the electrical outlet/plug. Mount the control box in a suitable location to prevent physical stress on the electrical outlets and charge cord components.

   Mount the control box directly to the wall or stud near a suitable electrical outlet. The retention eyelets on the control box are optimized for use with #10 drywall screws.

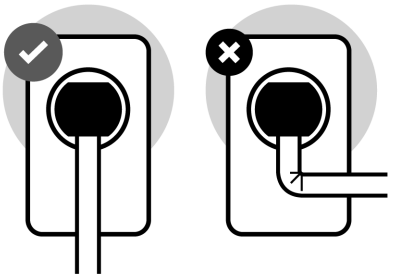

3. Handle electrical cables with care. Do not sharply bend, pull, or crush cables.
4. Connect the attachment plug to the electrical outlet. Refer to the "Charge Cord Status Indicator" section to ensure the charge cord is working properly.
5. Insert the vehicle plug into the vehicle charge port to initiate charging.
6. To disconnect the charge cord, press the release button on the vehicle plug to stop the charging session. Wait for the vehicle to release the plug. Once disconnected from the vehicle, the charge cord can be unplugged from the wall.

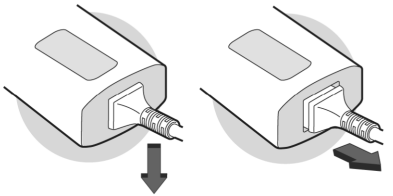

7. To remove the connector from the control box, pull down and out at the same time.

Charge Cord Status Indicator

The charge cord will perform a quick self-test after you plug it in.

Verify the charge cord status on the charge cord control box. The charge cord uses a combination of red and green indicators to display its status.

If the charge cord status indicator is not lit, ensure the electrical outlet has power.

Green	Red	Reason	Action
–	–	The charge cord has no power.	Verify all components are connected properly, there is no damage, and the outlet has power. If the error continues, contact your dealer.
On	–	The charge cord is ready to use.	Plug the charge cord into the vehicle charge port to begin charging.
Blinking	–	The vehicle is actively charging.	No action needed.
Blinking	Blinking	An error has occurred and the charge cord is rebooting.	Wait for the charge cord to return to a solid green. If it reboots two or three more times, unplug the charge cord from the vehicle. If the error continues, contact your dealer.
–	Four blinks	An error has occurred or the connector type is invalid and the charge cord is rebooting.	Make sure the connector and the control box are fully connected or try another connector.
–	Three blinks	The control box temperature is out of the normal range.	Move the charge cord away from direct sunlight and/or hot surfaces such as asphalt paving, or wait until the charge cord has warmed up.
Blinking	Three blinks	The charge cord control box is overheating. Charging continues at a reduced rate.	If unplugging and plugging the charge cord back in to the vehicle does not work, move the charge cord away from direct sunlight and/or hot surfaces such as asphalt paving.
Blinking	One blink	AC plug or electrical outlet is overheating, charging continues at a reduced rate.	Disconnect from the electrical outlet. If the error persists, have a qualified electrician inspect and repair the issue.

Green	Red	Reason	Action
–	One blink	The charger is troubleshooting after an error and requires a reboot.	– Verify all components are connected properly. Ensure the connectors are fully inserted into the control box. – Unplug and plug in the connector. – If the charge cord is in a warm environment, try charging in a cooler area. – Try a different outlet or connector, if available. If the error continues, contact your dealer.
–	Two blinks	There is a Ground Fault Circuit Interruption fault.	The charge cord will auto-restart after 15 minutes. Try a different connector, if available. If the error continues, contact your dealer.
–	On	There is a cordset internal fault.	Immediately disconnect from the electrical outlet and the vehicle. Contact your dealer for a replacement.
–	Blinking	The charge cord is rebooting.	Wait for the charge cord to return to a solid green. If the indicator changes to a different failure mode, refer to that line in this table and follow the corresponding action. If the failure mode is not listed, contact your dealer.

If faults persist, see *Charge Cord Troubleshooting and Maintenance* ⇨ 277.

Charge Cord Auto-Restart

Your charge cord set is equipped with the auto-restart feature. When charging your vehicle, if there is an error detected, the auto-restart feature works to eliminate the error and resume charging.

If a Ground Fault Circuit Interruption fault caused the error, the charger attempts to restart for a 15-minute interval. After the fourth attempt to restart, the charger shuts down and the red indicator stays on. Unplug and plug the charge cord back in to reset the charging. If this error continues, stop charging your vehicle. See your dealer for service.

Charge Level Selection

⚠ Warning

Using a vehicle charge level that exceeds the electrical circuit or electrical outlet capacity may start a fire or damage the electrical circuit. Use the lowest vehicle charge level until a qualified electrician inspects the electrical circuit capacity. Use the lowest vehicle charge level if the electrical circuit or electrical outlet capacity is not known.

To select the charge level, on the infotainment app screen, select the Charging app > Settings. For more information on charge level settings, see *Charging* ⇨ *107*.

Moving and Storage

Caution

When moving the charge cord equipment, use care to prevent damage to the equipment. Do not twist, pull, or drag the charge cord. Do not lift or carry the equipment by the charge cord only.

Keep the charge cord mounted and plugged into the electrical outlet for daily use. If you will not use the charge cord for a long period, unplug it and store in a clean, temperature-controlled location between -40 °C (-40 °F) and 85 °C (185 °F).

When storing the charge cord in the vehicle, secure the charge cord bag. Depending on the storage location, tether the charge cord bag to the vehicle.

Charge Cord Troubleshooting and Maintenance

For safety information, see *Charge Cord* ⇨ *270*.

Troubleshooting

⚠ Warning

If there are signs of melting or scorching, do not touch the charge cord or attachment plug. Have a qualified electrician inspect and repair the issue.

Confirm that the attachment plug is not too hot to grasp before disconnecting the charge cord from the vehicle.

If it is not hot, manually reboot the charge cord by unplugging and plugging the attachment plug back into the electrical outlet. If the same fault reoccurs, test the charge cord with a different electrical outlet.

The charge cord monitors temperature at several locations and may reduce charging power or interrupt charging if temperatures become too high. The charge cord status indicators illuminate and identify this fault. In hot climates, move the charge cord away

from direct sunlight and/or hot surfaces such as asphalt pavement for approximately 30 minutes.

If there are no signs of damage, check how firm the fit of the plug is. If the plug easily pulls away from the electrical outlet, test the plug on a known good electrical outlet. If the fault condition returns, have your dealer inspect your charge cord. If the fault does not return, stop using the suspected circuit and have a qualified electrician inspect and repair the issue.

User Maintenance

The portable charge cord is not serviceable. Do not attempt to perform maintenance on the charge cord. See your dealer for replacement parts. Clean the charge cord and control box with a dry cloth and do not use any cleaning products.

Utility Interruption of Charging

Utility companies may limit or completely block electrical power grid use to balance electricity demand and supply. If limited, charging your vehicle will take longer. If blocked, charging will not resume until the interruption ends.

During a charging interruption:

- The instrument cluster displays a message indicating a utility interruption.
- Changing the charge mode to immediate charging or performing a delayed charging override will not resolve the interruption.
- Keep your vehicle plugged in so it automatically resumes charging once the interruption ends.

Managed Charging

If you are enrolled in a managed charging program, the myCadillac/myOwner app may send a text message or notification with details about the utility interruption and how to opt-out, if applicable.

Charging Station Troubleshooting

If the vehicle does not begin charging after you plug it in to a residential 240-volt charging station:

1. Verify that the charge mode is not set to a delayed charging override.
2. Verify that the charging station circuit breaker is not tripped.
3. Plug the portable charge cord into the wall outlet, verify that the indicator light on the charge cord is solid green, and connect it to the vehicle. See "Charge Cord Status Indicator" in *Installing and Operating the Charge Cord* ⇨ *273*.
4. If the vehicle charges with the portable charge cord and a different 240-volt charging station, such as a public station, there may be a problem with the charging station. Contact the charging station manufacturer for service.

Electrical Requirements for Battery Charging

This vehicle is designed for compatibility with most standard vehicle charging equipment in the region of sale. Check for charger compatibility before purchasing a charger.

Innovation, Science, and Economic Development (ISED) Radiation Exposure Statement

This equipment complies with RSS-102 radiation exposure limits set forth for an uncontrolled environment. This equipment should be installed and operated with

a minimum distance of 5.7 cm (2.2 in) between the radiator and any part of your body. The vehicle design ensures this distance is maintained during normal use. Changes or modifications to any of these systems by other than an authorized service facility could void authorization to use this equipment.

This Certification Information ensures compliance with Canada Innovation, Science, and Economic Development (ISED) regulations for the Integrated Power Electronics (IPE) module and OnBoard Charging Module 2 (OBCM2) (as equipped) that efficiently transfer energy to the vehicle battery to replenish driving range.

LG Magna

Delta Electronics Co., Ltd.

CAN ICES-001 (B) / NMB-001 (B)

See *Charge Cord* ⇨ *270*.

Trailer Towing

General Towing Information

⚠ Warning

You can lose control when towing a trailer if the correct equipment is not used or the vehicle is not driven properly. For example, if the trailer is too heavy or the trailer brakes are inadequate for the load, the vehicle may not stop as expected. You and others could be seriously injured. The vehicle may also be damaged, and the repairs would not be covered by the vehicle warranty. Pull a trailer only if all the steps in the Trailer Towing Supplement have been followed. Ask your dealer for advice and information about towing a trailer with the vehicle.

To find detailed preparation information, refer to the Trailer Towing Supplement online at:

For United States: www.cadillac.com/support/vehicle/manuals-guides

For Canada: www.cadillaccanada.ca/en/support/vehicle/manuals-guides

For Mexico: my.gm.com.mx/cadillac/es/ayuda-y-soporte/manual

To tow a disabled vehicle, see *Transporting a Disabled Vehicle* ⇨ *328*.

To tow the vehicle behind another vehicle such as a motor home, see *Recreational Vehicle Towing* ⇨ *329*.

Conversions and Add-Ons

Add-On Electrical Equipment

⚠ Warning

The Data Link Connector (DLC) is used for vehicle service and Emission Inspection/Maintenance testing. See *Service Vehicle Soon Light (Propulsion System Failure)* ⇨ *100*. A device connected to the DLC — such as an aftermarket fleet or driver-behavior tracking device — may interfere with vehicle systems. This could affect vehicle operation and cause a crash. Such devices may also access information stored in the vehicle's systems.

Caution

Some electrical equipment can damage the vehicle or cause components to not work and would not be covered by the vehicle warranty. Always check with your dealer before adding electrical equipment.

Add-on equipment can drain the vehicle's 12-volt battery, even if the vehicle is not operating.

When adding electrical equipment, it should only be connected using the accessory power outlets. The maximum power that can be supplied by one accessory power outlet or spread across all three is 200 watts or 15 amps. Exceeding 200 watts or 15 amps may cause erratic vehicle operation.

The vehicle has an airbag system. Before attempting to add anything electrical to the vehicle, see *Servicing the Airbag-Equipped Vehicle* ⇨ *62* and *Adding Equipment to the Airbag-Equipped Vehicle* ⇨ *62*.

Vehicle Care

General Information
General Information 282
California Perchlorate Materials Requirements 282
Accessories and Modifications 282

Vehicle Checks
Doing Your Own Service Work 282
Hood 283
Underhood Compartment Overview 285
Cooling System 286
Washer Fluid 287
Brakes 288
Brake Fluid 289
Battery - North America 290
Park Brake and P (Park) Mechanism Check 293
Wiper Blade Replacement 293
Windshield Replacement 294
Gas Strut(s) 294

Headlight Aiming
Front Headlight Aiming 295

Bulb Replacement
LED Lighting 295

Electrical System
High Voltage Devices and Wiring 295
Electrical System Overload 296
Fuses and Circuit Breakers 297
Underhood Compartment Fuse Block 298
Instrument Panel Fuse Block 302

Wheels and Tires
Tires 305
All-Season Tires 306
Winter Tires 306
Self-Sealing Tires 307
Low-Profile Tires 307
Summer Tires 308
Tire Sidewall Labeling 308
Tire Designations 309
Tire Terminology and Definitions 309
Tire Pressure 311
Tire Pressure for High-Speed Operation 312
Tire Pressure Monitor System 313
Tire Pressure Monitor Operation 314
Tire Inspection 318
Tire Rotation Monitor 318
Tire Rotation 318
When It Is Time for New Tires 319
Buying New Tires 320
Reverse Rim Wheels 321
Different Size Tires and Wheels 321
Uniform Tire Quality Grading 322
Wheel Alignment and Tire Balance 323
Wheel Replacement 323
Tire Chains and Other Traction Devices 324
If a Tire Goes Flat 325

Jump Starting
Jump Starting - North America 325

Towing the Vehicle
Transporting a Disabled Vehicle 328
Recreational Vehicle Towing 329

Appearance Care
Exterior Care 330
Interior Care 334
Floor Mats 337

General Information

For service and parts needs, visit your dealer. You will receive genuine GM parts and GM-trained and supported service people.

Genuine GM parts have one of these marks:





California Perchlorate Materials Requirements

Certain types of automotive applications, such as airbag initiators, seat belt pretensioners, and lithium batteries contained in electronic keys, may contain perchlorate materials. Perchlorate Material – special handling may apply. See www.dtsc.ca.gov/hazardouswaste/perchlorate.

Accessories and Modifications

Caution

When adding accessories or other equipment after the purchase of your vehicle, ensure you are not exceeding the vehicle axle weight ratings or overall weight ratings. Overloading the vehicle may cause damage. Repairs would not be covered by the vehicle warranty. Do not overload the vehicle. See *Vehicle Load Limits* ⇨ *177* for specific weight ratings.

Adding non-GM approved accessories or making vehicle modifications can affect performance and safety with airbags, braking, stability, ride and handling, emissions systems, aerodynamics, durability, Advanced Driver Assistance Systems, and electronic systems like antilock brakes, traction control, and stability control. These accessories or modifications could cause malfunction or damage not covered by the vehicle warranty.

Damage to suspension components caused by modifying vehicle height outside of factory settings will not be covered by the vehicle warranty.

Damage to vehicle components resulting from modifications or the installation or use of non-GM certified parts, including control module or software modifications, is not covered under the terms of the vehicle warranty and may affect remaining warranty coverage for affected parts.

Also, see *Adding Equipment to the Airbag-Equipped Vehicle* ⇨ *62*.

Vehicle Checks

Doing Your Own Service Work

⚠ Warning

Never try to do your own service on high voltage battery components. You can be injured and the vehicle can be damaged if you try to do your own service work. Service and repair of these high voltage battery

(Continued)

Warning (Continued)

components should only be performed by a trained dealer technician with the proper knowledge and tools.

Exposure to high voltage can cause shock, burns, and even death. The high voltage components in the vehicle can only be serviced by technicians with special training.

High voltage components are identified by labels. Do not remove, open, take apart, or modify these components. High voltage cable or wiring has orange covering. Do not probe, tamper with, cut, or modify high voltage cable or wiring.

⚠ Warning

Unexpected wheel motion and/or direction when one or more wheels are off the ground for service work may result in injury. The vehicle may:

(Continued)

Warning (Continued)

- Allow the wheels to rotate unexpectedly in either direction regardless of mode selection.
- Allow the wheels to rotate in reaction to attempts to rotate the tire(s) manually.
- Resist attempts to rotate the wheels manually.

Before lifting the vehicle to do your own service work, turn the vehicle off or place the vehicle in the Service Mode. To place the vehicle in Service Mode, see "Service Mode" under *Power Modes* ⇨ *181*.

⚠ Warning

It can be dangerous to work on your vehicle if you do not have the proper knowledge, service manual, tools, or parts. Always follow owner's manual procedures and consult the service manual for your vehicle before doing any service work.

The proper service manual provides more detail on vehicle service than this manual. To order the proper service manual, see *Publication Ordering Information* ⇨ *356*.

This vehicle has an airbag system. Before attempting to do your own service work, see *Servicing the Airbag-Equipped Vehicle* ⇨ *62*.

Keep a record with all parts receipts and list the mileage and the date of any service work performed. See *Maintenance Records* ⇨ *344*.

Hood

⚠ Warning

Components under the hood can get hot. To help avoid the risk of burning unprotected skin, never touch these components until they have cooled, and always use a glove or towel to avoid direct skin contact.

To open the hood:

Caution

The hood release handle can become damaged if pulled while the driver side door is closed. Open the driver side door to pull the hood release handle. Do not use the hood release handle when the driver side door is closed.

1. Open the driver's door to enable the hood release handle's full range of motion.
2. Pull the hood release handle on the lower left side of the instrument panel.

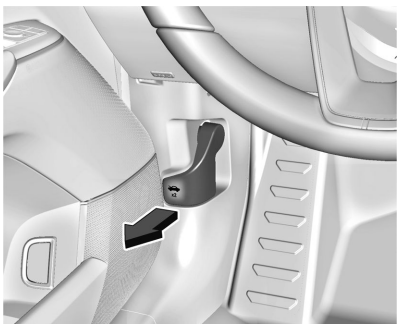

3. Release the handle, then pull the handle again to fully open the hood.
4. Go to the front of the vehicle and lift the hood open.

To close the hood:

⚠ Warning

Do not drive the vehicle if the hood is not latched completely. The hood could open fully, block your vision, and cause a crash. You or others could be injured. Always close the hood completely before driving.

1. Be sure all filler caps are on properly, and all tools are removed.
2. Lower the hood down until the strut system is no longer holding up the hood.
3. Allow the hood to fall. Check to make sure the hood is latched completely. Repeat this process with additional force if necessary.
4. If the hood does not latch, a message will display on the Driver Information Center indicating the vehicle will not shift out of Park (P). To override this function, press and hold the brake pedal until override completion message is displayed on the Driver Information Center.

Underhood Compartment Overview

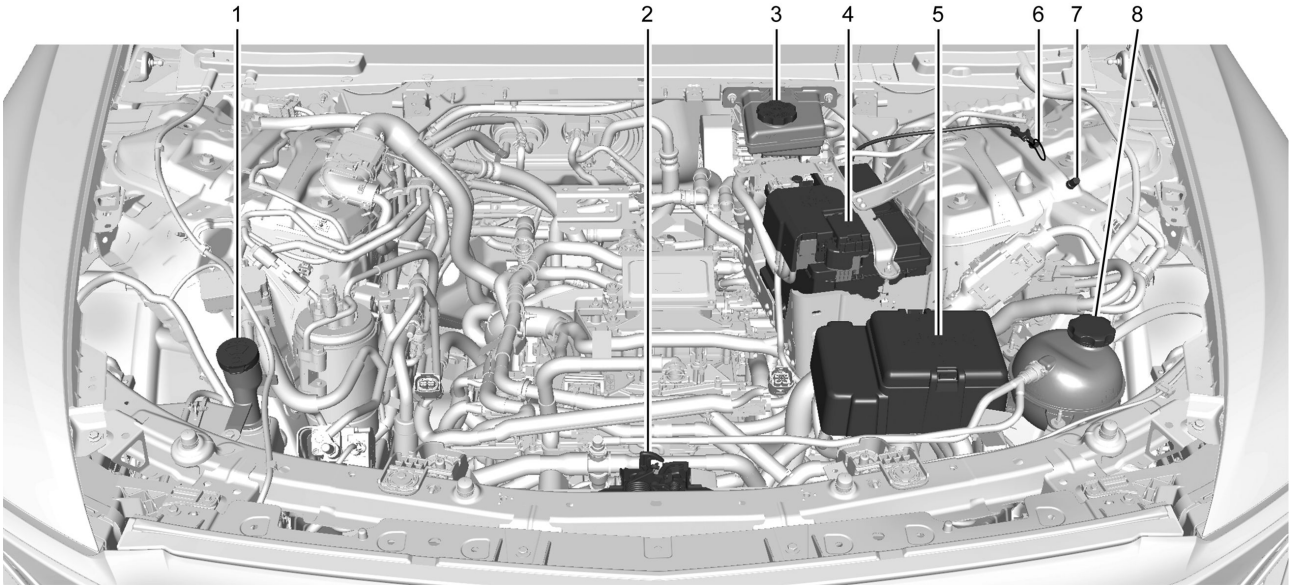

1. Windshield Washer Fluid Reservoir. See *Washer Fluid* ⇨ *287*.
2. Hood Latch. See *Hood* ⇨ *283*.
3. Brake Fluid Reservoir. See *Brake Fluid* ⇨ *289*.
4. Battery Positive (+) Terminal. See *Battery - North America* ⇨ *290*.

5. Fuse Block. See *Underhood Compartment Fuse Block* ⇨ *298*.
6. Charging Port Manual Cord Release. See *DC Charging* ⇨ *264*.
7. Battery Negative (−) Grounding Point. See *Jump Starting - North America* ⇨ *325*.
8. High Voltage Battery Coolant Reservoir. See *Cooling System* ⇨ *286*.

Cooling System

⚠ Warning

If the coolant inside the surge tank is boiling, do not do anything else until the cooling system cools down. You or others could be burned. You should have your vehicle checked by your GM dealer.

⚠ Warning

The coolant system hoses and related components become hot during vehicle operation. To avoid potential burns, do not touch these components while they are still hot.

EVs have one or more independent cooling systems designed to control the temperature of the high voltage battery, power electronic modules, and cabin heating. These cooling systems are complex and should only be serviced by a qualified technician.

The following explains the cooling systems and how to check coolant levels.

Cooling System Pressure Caps

Caution

If the pressure caps are not secured and tightened properly, coolant loss and damage to the vehicle and/or its electrical systems may occur. Always visit your local GM dealer for service to the electric vehicle cooling systems.

Electric vehicle cooling system pressure caps are tamper-resistant and must be fully installed on the coolant surge tanks at all times. The coolant should only be serviced by a qualified technician.

Coolant

Caution

GM electric vehicle cooling systems require a 50/50 mix of DEXCOOL and de-ionized water. Use only ACDelco Premix (50/50 mixture of DEXCOOL and de-ionized water), which is available from your dealer. Do not use DEXCOOL mixed with tap water or distilled water in an electric vehicle cooling system as it could damage and/or contaminate the cooling system and related components. The vehicle could become disabled.

The electric vehicle cooling systems are filled with coolant that meets GM Standards GMW18270 and GMW3420 (DEXCOOL). This coolant is designed to remain in the vehicle for five years or 240,000 km (150,000 miles), whichever occurs first.

How to Check Coolant Level in the Coolant Surge Tank

⚠ Warning

Use only ACDelco Premix (50/50 mixture of DEXCOOL and de-ionized water), which is available from your dealer. Do not use any other coolant or mixture. Plain water or other liquid may cause cooling system corrosion and/or cooling system being frozen which eventually may cause a loss of propulsion while driving.

⚠ Warning

Do not drive the vehicle if there is a coolant leak. Coolant loss can indicate a problem. All the coolant could leak out, causing the vehicle to suddenly lose propulsion while driving, which could result in a crash causing vehicle damage or personal injury/death. Always visit your local GM dealer for electric vehicle cooling systems service.

The coolant needs to be replaced at the appropriate interval. See *Maintenance Schedule* ⇨ *340*.

The coolant reservoir is in the underhood compartment. See *Underhood Compartment Overview* ⇨ *285*.

1. Park on a level surface and turn the vehicle off.
2. Open the hood. See *Hood* ⇨ *283*.

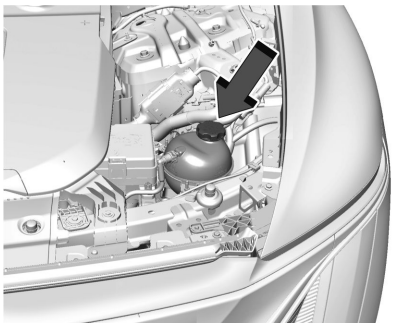

3. After the system has completely cooled, check the coolant level in the reservoir.

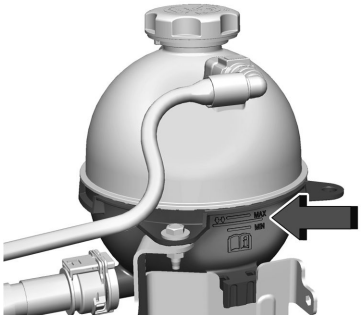

4. If the coolant level is not visible or needs to be adjusted within the reservoir, contact your dealer.

Washer Fluid

What to Use

Caution

- Do not use washer fluid that contains any type of water repellent coating. This can cause the wiper blades to chatter or skip.

(Continued)

Caution (Continued)

- Do not use engine coolant (antifreeze) in the windshield washer. It can damage the windshield washer system and paint.
- Do not mix water with ready-to-use washer fluid. Water can cause the solution to freeze and damage the washer fluid tank and other parts of the washer system.
- When using concentrated washer fluid, follow the manufacturer instructions for adding water.
- Fill the washer fluid tank only three-quarters full when it is very cold. This allows for fluid expansion if freezing occurs, which could damage the tank if it is completely full.

Always read the manufacturer's instructions before adding windshield washer fluid. If you are in an area where the temperature may fall below freezing, use a fluid that has sufficient protection against freezing.

Adding Washer Fluid

If equipped with a washer fluid level indicator, a message displays on the Driver Information Center when the washer fluid level is low.

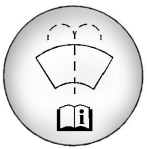

Open the cap with the washer symbol on it. Add washer fluid until the tank is full. See *Underhood Compartment Overview* ⇨ *285* for reservoir location.

Brakes

Inspections

Visually inspect brake system components as follows:

- Brake lines and hoses for proper attachment, connections, binding, leaks, cracks, and chafing.
- Disc brake pads for wear and rotors for surface condition.
- Drum brake linings/shoes for wear or cracks.
- All other brake parts for cracks and leaks.

When tires are rotated, inspect drum brake linings or disc brake pads for wear.

Troubleshooting

Brake Pedal Travel

See your dealer if the brake pedal does not return to normal height, or if there is a rapid increase in pedal travel. This could be a sign that brake service may be required.

Brake Pulsation

If brakes are pulsating:

- Inspect rotors, pads, linings for uneven wear. Resurface or replace as needed.
- Check torque on all wheel nuts. Properly torqued wheel nuts are necessary to help prevent brake pulsation. Evenly tighten wheel nuts in the proper sequence to torque specifications. See *Capacities and Specifications* ⇨ *345*.

Brake Squeal and Brake Wear Indicators

Warning

The brake wear warning sound means that soon the brakes will not work well. That could lead to a crash. When the brake wear warning sound is heard, have the vehicle serviced.

Disc brake linings have built-in wear indicators that make a high-pitched warning sound when the brake linings are worn, and new linings are needed. The sound can come and go or can be heard all the time when the vehicle is moving, except when applying the brake pedal firmly.

Some driving conditions or climates can cause a brake squeal when the brakes are first applied, clearing up following several applications. This does not mean something is wrong with the brakes.

Replacing Brake System Parts

Caution

Continuing to drive with worn-out brake linings could result in costly brake repairs.

Brake pads should be replaced as complete axle sets.

Always replace brake system parts with new, approved replacement parts. If this is not done, the brakes may not work properly. The braking performance can change in many ways if the wrong brake parts are installed or if parts are improperly installed.

Brake Fluid

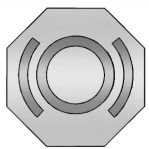

The brake master cylinder reservoir is filled with GM approved DOT 4 brake fluid as indicated on the reservoir cap.

Checking Brake Fluid

1. Place the vehicle in P (Park) on a level surface.
2. Locate the brake fluid reservoir. See *Underhood Compartment Overview* ⇨ *285* for the reservoir location.
3. Clean the brake fluid reservoir cap and the area around the cap before removing it to prevent dirt or debris from contaminating the brake fluid.
4. Check that the brake fluid level is between “MIN” and “MAX” marks on the brake fluid reservoir.
5. Review “Adding Brake Fluid” and “Low Brake Fluid” later in this section.

Low Brake Fluid

When the brake fluid falls to a low level, the brake warning light comes on. See *Brake System Warning Light* ⇨ *100*.

Low brake fluid may be a result of normal brake lining wear or a brake system fluid leak.

- Do not top off the brake fluid. Adding fluid does not correct the issue if the linings are worn. Fluid level will return to normal when new linings are installed.
- The brakes will not work as normal. See your dealer to have the brake hydraulic system fixed.

Adding Brake Fluid

⚠ Warning

The wrong or contaminated brake fluid could result in damage to the brake system. This could result in the loss of braking leading to a possible injury. Always use the proper GM approved brake fluid.

Caution

If brake fluid is spilled on the vehicle's painted surfaces, the paint finish can be damaged. Immediately wash off any painted surface.

Caution

If too much brake fluid is added, the brake fluid can spill and cause vehicle damage, including damage to electrical components and surfaces. Add brake fluid only when work is done on the brake hydraulic system.

Brake fluid absorbs water over time which degrades the effectiveness of the brake fluid. Replace brake fluid at the specified intervals to prevent increased stopping distance. See *Maintenance Schedule* ⇨ *340*.

Use only GM approved DOT 4 brake fluid from a clean, sealed container. See *Recommended Fluids and Lubricants* ⇨ *343*.

Battery - North America

This vehicle has a high voltage battery and a standard 12-volt battery.

See your dealer if either the 12-volt or high voltage battery needs service.

12-Volt Battery

The original equipment battery is maintenance free. Do not remove the cap and do not add fluid.

The vehicle has an Absorbed Glass Mat (AGM)/Valve-Regulated Lead-Acid (VRLA) 12-volt battery. Refer to the replacement number shown on the original battery label when the vehicle needs a new 12-volt battery. Installation of a standard 12-volt battery will result in reduced 12-volt battery life.

Some 12-volt chargers have an Absorbed Glass Mat (AGM) battery setting. This setting limits the charge voltage to 14.8 volts and helps extend the battery life. If available, use the Absorbed Glass Mat (AGM) setting when charging the battery.

If the 12-volt battery is low, the vehicle may not start and could enter a faulted state, resulting in a battery warning light, the inability to shift into D (Drive), and a blank infotainment screen. If the 12-volt battery is low, follow the jump starting procedure. See *Jump Starting - North America* ⇨ *325*.

Once charged, turn the vehicle on, then turn it off. Do not operate or interact with the vehicle for 15 minutes to allow the system to reset. After the reset, start the vehicle. If the faulted state persists, see your dealer for service.

⚠ Warning

WARNING: Battery posts, terminals and related accessories can expose you to chemicals including lead and lead compounds, which are known to the State of California to cause cancer and birth

(Continued)

Warning (Continued)

defects or other reproductive harm. Wash hands after handling. For more information go to www.P65Warnings.ca.gov.

See *California Proposition 65 Warning* ⇨ *1*.

High Voltage Battery

Only a trained service technician should inspect, test, or replace the high voltage battery. See your dealer for information on how to recycle the high voltage battery or go to https://www.recyclemybattery.com.

⚠ Warning

Damage to the high voltage battery or high voltage system can create a risk of electric shock, overheating, or fire.

If the vehicle is damaged from a moderate to severe crash, flood, fire, or other event, the vehicle should be inspected as soon as possible. Until the vehicle has been inspected, store it outside at least 15 m (50

(Continued)

Warning (Continued)

ft) from any structure or anything that can burn. Ventilate the vehicle by opening a window or a door.

Contact Customer Assistance as soon as possible to determine whether an inspection is needed. See *Customer Assistance Offices* ⇨ *351*.

If the vehicle is in a crash, the sensing system may shut down the high voltage system. If this occurs, the high voltage battery disconnects and the vehicle will not start. The SERVICE VEHICLE SOON message in the Driver Information Center will display. See your dealer for service before operating the vehicle again. If a crash occurs or an airbag(s) inflates, see *If a Crash Occurs* ⇨ *355* and *What Will You See After an Airbag Inflates?* ⇨ *57* for additional information.

Battery Temperature

⚠ Warning

This vehicle is equipped with high voltage battery thermal detection, mitigation, and notification software. If the high voltage battery overheats, it may create a risk of a vehicle fire and may result in damage to property, serious injury, or death.

If the high voltage battery overheats, an audible alarm may sound, a message may display on the Driver Information Center (DIC), and OnStar may be called. To alert others outside your vehicle, the horn may sound, and the lights may flash.

If driving, pull over as soon as possible to a safe location at least 50 feet (15 m) away from any structure or anything that may burn. Park your vehicle, set the parking brake, and turn the vehicle off. Open a window or door for ventilation.

(Continued)

Warning (Continued)

Remove the remote key and move yourself and others to a safe, upwind location away from the vehicle. Do not return to the vehicle or attempt to restart or drive the vehicle.

Call emergency services and inform them that an electrical vehicle high voltage battery is overheating.

Never attempt to put out a vehicle fire.

Your vehicle must be towed to an authorized dealer to have the high voltage battery inspected before the vehicle can be operated again.

Keep the vehicle plugged in, even when fully charged, to keep the high voltage battery temperature ready for the next drive. This is important when outside temperatures are extremely hot or cold.

Extremely cold temperatures or a high voltage battery that is too cold can reduce propulsion power. The message BATTERY TOO COLD, PLUG IN TO WARM will display. If the message displays, use a level 2 charger to heat the battery to a minimum temperature to enable propulsion or charging.

Your dealer offers a vehicle cover, which can reduce sun loading on the vehicle and improve high voltage battery life.

Federal Communications Commission (FCC) Radiation Exposure Statement

This equipment has been evaluated to be installed and operated at a minimum distance of 5.7 cm (2.2 in) between the device and your body. The vehicle design ensures this distance is maintained during normal use. Changes or modifications to any of these systems by other than an authorized service facility could void authorization to use this equipment.

Vehicle Storage

When storing the vehicle for any length of time, leave the charge cord plugged in. The vehicle monitors and maintains the 12-volt battery daily. It is okay to leave the vehicle plugged in for extended periods of time. Very little energy is required to maintain the 12-volt battery and high voltage battery.

If it is not possible to store the vehicle with the charge cord left plugged in, charge the high voltage battery before storing. The vehicle will stop maintenance of the 12-volt battery if the high voltage battery state of charge gets too low.

When storing the vehicle on a long-term basis:

- Keep the high voltage battery state of charge at 30%.
- Attach an Absorbed Glass Mat (AGM)/Valve-Regulated Lead-Acid (VRLA) compatible battery tender or trickle charger to the 12-volt battery.
- Keep the remote key more than 3 m (10 ft) away from the vehicle.

12-volt Battery

⚠ Warning

Batteries have acid that can burn you and gas that can explode. You can be badly hurt if you are not careful. Always wear eye protection. See *Jump Starting - North America* ⇨ *325* for tips on working around a battery without getting hurt.

Caution

The vehicle is equipped with an AGM/VRLA 12-volt battery, which can be damaged by using the incorrect type of trickle charger. An AGM/VRLA-compatible charger must be used, with the appropriate setting selected. Follow the trickle charger manufacturer instructions.

Do not disconnect the 12-volt battery during storage.

You may attach a trickle charger to the 12-volt battery terminals or trickle charge from the underhood remote positive (+) and negative (–) terminals. See *Jump Starting - North America* ⇨ *325* for location of these terminals.

With a trickle charger connected to the 12-volt battery, the vehicle will still monitor the 12-volt battery daily, but it will not use energy from the high voltage battery for maintenance.

High Voltage Battery

After extended storage, the vehicle may not operate. If this occurs, plug in and charge the high voltage battery.

Park Brake and P (Park) Mechanism Check

⚠ Warning

When you are doing this check, the vehicle could begin to move. You or others could be injured and property could be damaged. Make sure there is room in front of the vehicle in case it begins to roll. Be ready to apply the regular brake at once should the vehicle begin to move.

To check the electric parking brake and P (Park) mechanism:

1. Park on a steep hill with the vehicle facing downhill.
2. Keep your foot on the regular brake and set the electric parking brake.
3. Check the holding ability as follows:
   - **Electric parking brake:** Turn the vehicle on and shift to N (Neutral). Slowly remove your foot from the brake pedal until only the electric parking brake is holding the vehicle.
   - **P (Park) mechanism:** Turn the vehicle on and shift to P (Park). Then release the electric parking brake and slowly remove your foot from the regular brake pedal.

If there is excessive vehicle roll during these checks, contact your dealer for service.

Wiper Blade Replacement

Caution

Allowing the wiper arm to touch the windshield when no wiper blade is installed could damage the windshield. Any damage that occurs would not be covered by the vehicle warranty. Do not allow the wiper arm to touch the windshield.

Windshield wiper blades should be replaced periodically. See the *Maintenance Schedule* ⇨ *340*.

Replacement blades come in different types and are removed in different ways. For proper type and length, see your dealer.

To replace the windshield wiper blade:

1. Pull the windshield wiper assembly away from the windshield.
2. Rotate the wiper blade heel away from the arm.

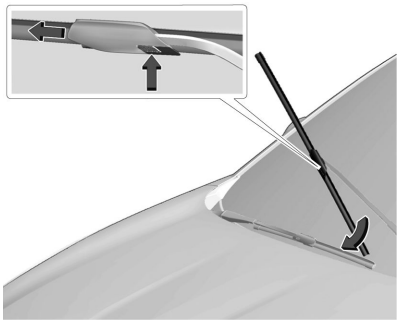

3. Press the button in the middle of the wiper arm connector, and pull the wiper blade away from the arm connector.
4. Remove the wiper blade.
5. Reverse Steps 1–4 for wiper blade replacement.

Windshield Replacement

A replacement windshield must be GM approved and installed according to GM specifications to maintain its features and functionality (for example, Advanced Driver Assistance Systems).

If your vehicle is equipped with any of the following features, see your dealer:

- Acoustic Windshield
- Heated Wiper Park
- Advanced Driver Assistance Systems. See *Advanced Driver Assistance Systems* ⇨ *234*.
- Head-Up Display. See *Head-Up Display (HUD)* ⇨ *116*.

Gas Strut(s)

⚠ Warning

If the gas struts that hold open the hood, trunk, and/or liftgate fail, you or others could be seriously injured. Take the vehicle to your dealer for service immediately. Visually inspect the gas struts for signs of

(Continued)

Warning (Continued)

wear, cracks, or other damage periodically. Check to make sure the hood/trunk/liftgate is held open with enough force. If struts are failing to hold the hood/trunk/liftgate, do not operate. Have the vehicle serviced.

Caution

Do not apply tape or hang any objects from gas struts. Also do not push down or pull on gas struts. This may cause damage to the vehicle.

Your vehicle may be equipped with gas strut(s) to provide assistance in lifting and holding open the hood/trunk/liftgate system in full open position.

See your dealer to have the gas strut(s) serviced. See *Maintenance Schedule* ⇨ *340*.

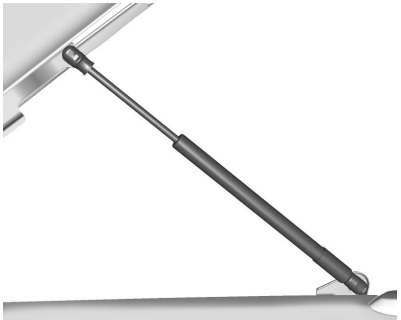

Hood

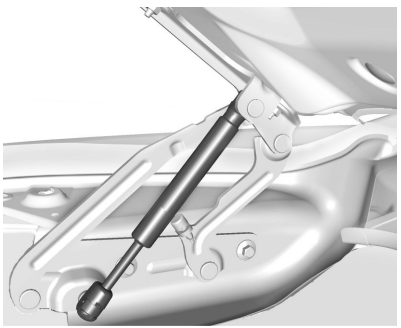

Trunk



Liftgate

Headlight Aiming

Front Headlight Aiming

Headlight aim is preset. If the vehicle is damaged in a crash that affects headlight aim, visit your dealer to adjust it.

Bulb Replacement

LED Lighting

This vehicle is equipped with LED light sources for all exterior lights.

The light assemblies do not contain any serviceable light sources (e.g., incandescent bulbs).

For replacement of any LED lighting assembly, contact your dealer.

Electrical System

High Voltage Devices and Wiring

⚠ Warning

Exposure to high voltage can cause shock, burns, and even death. The high voltage components in the vehicle can only be serviced by technicians with special training.

High voltage components are identified by labels. Do not remove, open, take apart, or modify these components. High voltage cable or wiring has orange covering or labels. Do not probe, tamper with, cut, or modify high voltage cable or wiring.

Electrical System Overload

The vehicle has fuses and circuit breakers to protect the wires powering the devices in your vehicle against an electrical system overload.

Circuit breakers open and close to protect the circuit when the electrical load is too heavy. The internal filament may permanently open under a heavy load. If this happens, replace the fuse to restore the protected electrical function and reduce the risk of circuit overload and electrical fire.

Fuses and circuit breakers protect the wires powering the devices in your vehicle.

To check a fuse, look at the band inside the fuse. If the band is broken or melted, replace the fuse. Be sure to replace a bad fuse with a fuse of the identical size and rating.

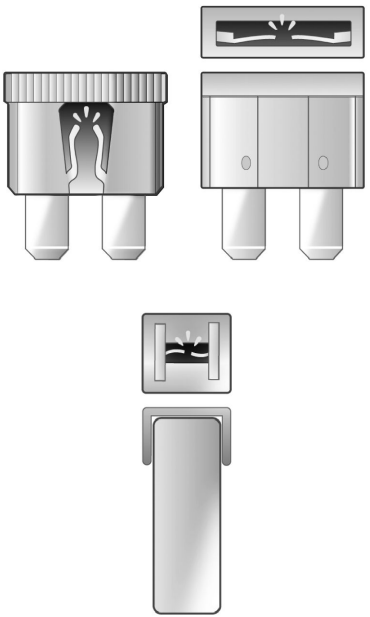

Replacing a Blown Fuse

If you need to replace a fuse, choose a fuse of the same amperage from the fuse block. Use either a SPARE fuse or a non-essential feature if there are no SPARE fuses of the correct amperage. Replace the blown fuse as soon as possible.

To replace a blown fuse:

1. Turn off the vehicle.
2. Locate the fuse puller in the underhood fuse block.

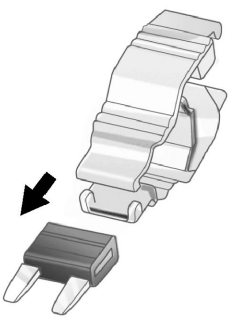

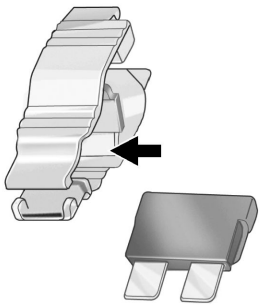

3. Use the fuse puller to remove the fuse from the top or side, as shown above.
4. If the fuse must be replaced immediately, temporarily replace the fuse with one of the same amperage from the fuse block. Choose a non-essential vehicle feature to safely operate the vehicle. Repeat Steps 2–3.
5. Insert the replacement fuse into the empty slot of the blown fuse.

See your dealer to replace the blown fuse.

Headlight Wiring

An electrical overload may cause the lights to go on and off, or in some cases to remain off. See your dealer if the lights go on and off or remain off.

Windshield Wipers

Overload due to heavy snow or ice may cause damage to the wiper linkage. Always clear heavy snow and ice from the windshield before using the windshield wipers.

If the wiper motor overheats due to heavy snow or ice, the windshield wipers will stop until the motor cools. Once the motor has cooled down, the wipers will restart.

Address any electrical overload as soon as possible. See your dealer.

Fuses and Circuit Breakers

⚠ Danger

Fuses and circuit breakers are marked with their ampere rating. Do not exceed the specified amperage rating when replacing fuses and circuit breakers. Use of an

(Continued)

Danger (Continued)

oversized fuse or circuit breaker can result in a vehicle fire. You and others could be seriously injured or killed.

⚠ Warning

Installation or use of fuses that do not meet GM's original fuse specifications is dangerous. The fuses could fail, and result in a fire. You or others could be injured or killed, and the vehicle could be damaged.

The fuses and circuit breakers protect the electrical system from short circuits, greatly reducing the chance of electrical damage or fire.



See *Accessories and Modifications* ⇨ *282* and *General Information* ⇨ *282*.

To check or replace a blown fuse, see *Electrical System Overload* ⇨ *296*.

Underhood Compartment Fuse Block

There is a fuse block in the underhood compartment. See *Underhood Compartment Overview* ⇨ *285*.

To Access:

Caution
Spilling liquid on any electrical component on the vehicle may damage it. Always keep the covers on any electrical component.

1. Open the hood. See *Hood* ⇨ *283*.

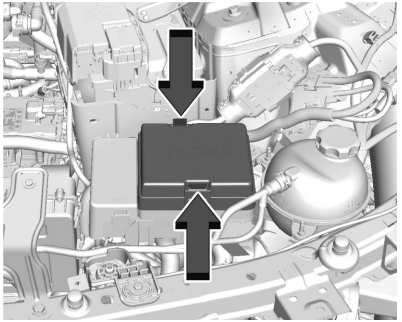

2. Press the clips at the side and back and pull the cover up.

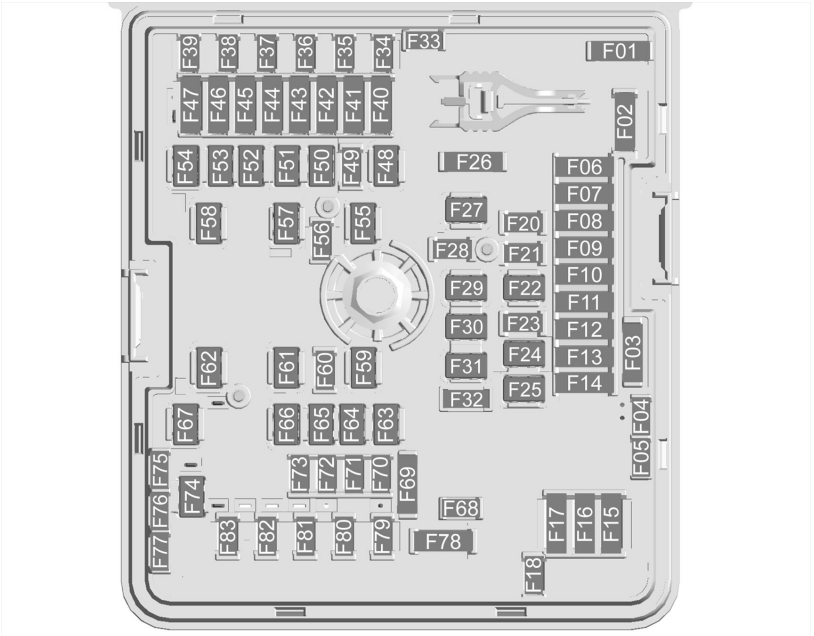

A fuse puller is in the underhood compartment fuse block.

The vehicle may not be equipped with all the fuses, relays, and features shown. For the most accurate fuse amperage ratings and functions, refer to the fuse label.

Fuses	Usage
F01	SPARE
F02	–
F03	SPARE
F04	SPARE
F05	SPARE
F06	MSM/MEMORY SEAT BOLSTER – Memory Seat Module/Memory Seat Bolster
F07	PEEV/PCEV & ECFV/CHFV – Primary Evaporator Expansion Valve/Primary Chiller Expansion Valve and External Condenser Flow Valve/Condensing Heater Flow Valve
F08	Motor: MCV – Motor Main Coolant Valve
	–

Fuses	Usage
F09	Motor: PECP & Motor: ESSCP – Power Electronics Coolant Pump and Energy Storage System Coolant Pump
F10	–
F11	–
F12	ECP_S & OBCM 2 – Electrification Control Processor (Traction Power Inverter Module 2) & On Board Charging Module 2
F13	–
F14	–
F15	TRLR PRK LAMPS – Trailer Park Lights
F16	TRLR REV LAMP – Trailer Reverse Light
F17	–
F18	GLBX DR RELSE – Glove Box Door Release
F20	–
F21	CHARGE PORT DR MTR – Charge Port Door Motor
F22	DC/AC INV MDL – Direct Current to Alternating Current Inverter Module
F23	–
F24	–
F25	–
F26	SPARE
F27	–
F28	–
F29	–
F30	Rear Cargo APO – Rear Cargo Auxiliary Power Outlet
F31	TRLR INTERFACE MDL BATT SOURCE 1 – Trailer Interface Module Battery Source 1
F32	SPARE
F33	SPARE
F34	ELM 5 – Exterior Lighting Module 5
F35	ELM 4 – Exterior Lighting Module 4
F36	ETC MOD – Electronic Toll Collection Module
F37	–
F38	ELM 7 – Exterior Lighting Module 7
F39	ELM 3 – Exterior Lighting Module 3
F40	ECP_E_Batt SOURCE 1 & ECP_E_Batt SOURCE 3 – Electrification Control Processor (Traction Power Inverter Module) Source 1 and 3

Fuses	Usage
F41	DSP & AIR SPRINGS 2 – Door Switch Panel and Suspension Control Leveling 2
F42	SEAT POS SW & VKM SNSR/RLH SNSR – Seat Position Switch and Virtual Key Module Sensor/Rain Light Humidity Sensor
F43	SCL & CHIM MDL – Steering Column Lock and Charge Interface Module
F44	PSM & AERO SH – Power Sounder Module and Aero Shutter
F45	RFA MDL & HFC MDL – Remote Function Actuator Module and Handsfree Closure Module
F46	AFL/AHL & PFA Module – Adaptive Forward Lighting/ Automatic Headlamp Leveling and Pedestrian Friendly Alert Module
F47	LIT GRILLE/FR PRK EMBLEM & SADS – Lit Grille/Front Park Emblem and Semi Active Damping System
F48	PWR T/GATE – Power Tailgate
F49	–
F50	MTR WDW LIFTER LT – Motor Window Lifter Left
F51	AIR SPRINGS 1 – Suspension Control Leveling 1
F52	MTR WDW LIFTER RT – Motor Window Lifter Right
F53	FRT WPR – Front Wiper Control
F54	TRLR HEAVYDUTY/TRLR EURO – Trailer Heavy Duty/ Trailer Europe
F55	Rear Defog
F56	FOLD SEAT RT MTR/SW – Fold Seat Right Motor/Switch
F57	EBCM– Electronic Brake Control Module
F58	FRT BLWR MTR – Front Blower Motor
F59	–
F60	Horn
F61	–
F62	REAR BLWR MTR – Rear Blower Motor
F63	MTR S/ROOF & SUNSHD – Motor Sunroof and Motor Sunshade

Fuses	Usage
F64	PWR SEAT DRVR – Power Seat Driver
F65	PWR SEAT PASS – Power Seat Passenger
F66	CRFM – Condenser Radiator Fan Module
F67	Heated Wiper
F68	SPARE
F69	SPARE
F70	RELAY COIL
F71	REAR HTD/SEAT 2 – Rear Heated Seat 2
F72	FRT HTD/SEAT 1 – Front Heated Seat 1
F73	FOLD SEAT LT MTR/SW – Fold Seat Left Motor/Switch
F74	TRLR INTERFACE MDL BATT SOURCE 2 – Trailer Interface Module Battery Source 2
F75	SPARE
F76	SPARE
F77	SPARE
F78	TRLR ST/TRN LT & TRLR ST/TRN RT – Trailer Stop Turn Left and Trailer Stop Turn Right
F79	REAR HTD/SEAT 1 – Rear Heated Seat 1
F80	FRT HTD/SEAT 2 – Front Heated Seat 2
F81	OUT OF PRK DSBL – Out of Park Disable
F82	Wash Pump
F83	Camera Wash

Instrument Panel Fuse Block

The instrument panel fuse block is to the right of the glove box.



To Access the Fuses:

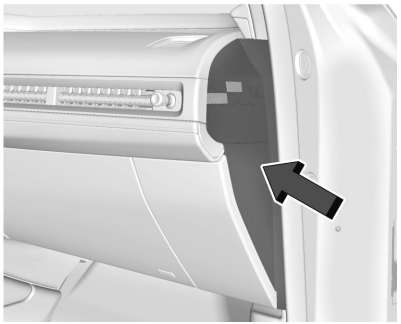

1. Remove the outer trim cover. Using a flat-bladed plastic tool, release the retaining clips.
2. Pull the cover rearward to clear the tab and remove.



3. Remove the front panel, starting at the top.
4. Once the panel clips disengage, the tabs along the bottom of the door can disengage from the instrument panel to remove the front panel.

To reinstall the front panel and outer trim cover, starting with the front panel, place the bottom tabs into the slots, and rotate the door into position, engaging the clips. Then, repeat the process with the outer trim cover.

See your dealer if additional assistance is needed.

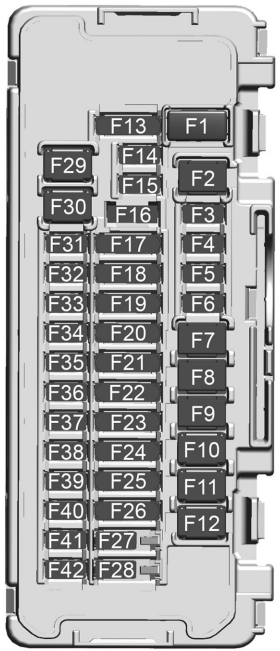

The vehicle may not be equipped with all the fuses, relays, and features shown. For the most accurate fuse amperage ratings and functions, refer to the fuse label.

Fuses	Usage
F1	–
F2	APO/CIGAR LTR – Auxiliary Power Outlet Instrument Panel/Cigar Lighter
F3	–
F4	USB PORT/APO AC 150W – Universal Serial Bus Charge Port/Auxiliary Power Outlet Alternating Current 150W
F5	STRG COL LOCK – RUN/ CRANK Steering Column Lock
F6	ELM 1– Exterior Lighting Module 1
F7	AMP-BASE – Amplifier-Base
F8	RT DR LATCH – Right Door Latch

Fuses	Usage
F9	LT DR LATCH – Left Door Latch
F10	STRG COL POS MDL – Steering Column Position Module
F11	ACP 4 –ADAS Compute Platform 4
F12	–
F13	EUROPE-TRLR CON & ECP_E/ECP_S/VICM – RUN/CRANK Europe – Trailer Control and Electrification Control Processor (Traction Power Inverter 1 and 2)/Vehicle Integration Control Module
F14	HEADLAMPS – RUN/CRANK Headlamps
F15	HDLP RT –Headlamp Right
F16	STRG COL/CLOCK SPRING – Steering Column Lock/Clock Spring
F17	SEAT FAN PASS & SEAT FAN DRVR – RUN/CRANK Seat Fan Passenger and Seat Fan Driver
F18	VCD & SRR – Virtual Cockpit Display and Short Range Radar
F19	MISC 1/MISC 2 – Trailer interface module/Electronic Brake Control Module/Sensing and Diagnostics Module/Exterior Lighting Module/Inside Rear View Mirror/Headlight Switch/Reflective Light Auxiliary Display/Interior Particulate Matter Sensor
F20	BCM 1 & VICM – Body Control Module 1 and Vehicle Integration Control Module
F21	LRR-RR & EPBS/ESM – Long Range Radar – Rear and Electric Park Brake Switch/Electronic Transmission Range Select Shifter Module
F22	VKM/VKMB/AUX JACK & ACP3 – Virtual Key Module/Virtual Key Backup Module/Auxiliary Jack and ADAS Compute Platform 3
F23	T/LAMP RT & T/LAMP LT – Tail Lamp Right and Tail Lamp Left
F24	UPA/APA/SBZA & SDM/AOS – Universal Park Assist/Automatic Park Assist/Side Blind Zone Alert and Sensing Diagnostic Module/Automatic Occupant Sensing Module

Fuses	Usage
F25	ACP 2/EOCM_LC/FCM/MFC & DMS/CGM/DLC/VDM – ADAS Compute Platform 2/External Object Calculating Module/Front Camera Module/Multi-Function Control and Driver Monitoring System/ Central Gateway Module/ Diagnostic Link Connector/ Vehicle Data Monitor
F26	ECP_E_BATT2/ACEC/HUD/ HVAC DISP R/PLCM – Electrification Control Processor (Traction Power Inverter Module) Battery 2/Air Condition Electric Compressor/Head Up Display/HVAC Display Rear/ Power Line Control Module
F27	BCM 3 – Body Control Module 3
F28	BCM 2 – Body Control Module 2
F29	AMP-UPLEVEL – Amplifier-Uplevel
F30	BCM 4 – Body Control Module 4
F31	VPM/SD CARD/ILSS/OHC – Video Processing Module/Secure Digital Card/ Indicator Light and Solar Sensor/Over Head Console
F32	HSWM – Heated Steering Wheel Module
F33	LRR FR/LIDAR – Long Range Radar Front/Light Detection and Ranging
F34	ELM 2 – Exterior Lighting Module 2
F35	HDLP LT – Headlamp Left
F36	VCU BATT 1 – Virtual Cockpit Unit Battery 1
F37	TCP (OnStar) – Telematics Communication Platform
F38	WCM – Wireless Charger Module
F39	HI VOLTAGE SYS LCKOUT – High Voltage System Lockout
F40	VCU Batt 2 – Virtual Cockpit Unit Battery 2
F41	ELM 6 – Exterior Lighting Module 6
F42	–

Wheels and Tires

Tires

Every new GM vehicle has high-quality tires made by a leading tire manufacturer. See the warranty manual for information

regarding the tire warranty and where to get service. For additional information refer to the tire manufacturer.

⚠ Warning

- Poorly maintained and improperly used tires are dangerous.
- Overloading the tires can cause overheating as a result of too much flexing. There could be a blowout and a serious crash. See *Vehicle Load Limits* ⇨ *177*.
- Underinflated tires pose the same danger as overloaded tires. The resulting crash could cause serious injury. Check all tires frequently to maintain the recommended pressure. Tire pressure should be checked when the tires are cold.

(Continued)

Warning (Continued)

- Overinflated tires are more likely to be cut, punctured, or broken by a sudden impact — such as when hitting a pothole. Keep tires at the recommended pressure.
- Worn or old tires can cause a crash. If the tread is badly worn, replace them.
- Replace any tires that have been damaged by impacts with potholes, curbs, etc.
- Improperly repaired tires can cause a crash. Only your dealer or an authorized tire service center should repair, replace, dismount, and mount the tires.
- Do not spin the tires in excess of 56 km/h (35 mph) on slippery surfaces such as snow, mud, ice, etc. Excessive spinning may cause the tires to explode.

See *Tire Pressure for High-Speed Operation* ⇨ *312* for inflation pressure adjustment for high-speed driving.

All-Season Tires

This vehicle may come with all-season tires. These tires are designed to provide good overall performance on most road surfaces and weather conditions. Original equipment tires designed to GM's specific Tire Performance Criteria (TPC) have a TPC specification code molded onto the sidewall.

Consider installing winter tires on the vehicle if frequent driving on snow or ice-covered roads is expected. All-season tires provide adequate performance for most winter driving conditions, but they may not offer the same level of traction or performance as winter tires on snow or ice-covered roads. See *Winter Tires* ⇨ *306*.

Winter Tires

This vehicle was not originally equipped with winter tires. Winter tires are designed for increased traction on snow and ice-covered roads. Consider installing winter tires on the vehicle if frequent driving on ice or snow

covered roads is expected. See your dealer for details regarding winter tire availability and proper tire selection. Also, see *Buying New Tires* ⇨ *320*.

With winter tires, there may be decreased dry road traction, increased road noise, and shorter tread life. After changing to winter tires, be alert for changes in vehicle handling and braking.

If using winter tires:

- Use tires of the same brand and tread type on all four wheel positions.
- Use only radial ply tires of the same size, load range, and speed rating as the original equipment tires.

Winter tires with the same speed rating as the original equipment tires may not be available for H, V, W, Y, and ZR speed rated tires. If winter tires with a lower speed rating are chosen, never exceed the tire's maximum speed capability.

Self-Sealing Tires

Caution
Do not drive on a deflated self-sealing tire as this could damage the tire. Make sure the tire is inflated to the recommended pressure or have it immediately repaired or replaced.

This vehicle may have self-sealing tires. These tires have a material inside that can seal punctures from common road hazards, such as nails and screws, in the tread area. The tire may lose air pressure if the sidewall is damaged or the tread puncture is too large. If the Tire Pressure Monitor System indicates the tire pressure is low, inspect the tire for damage and inflate it to the recommended pressure. If the tire is unable to maintain the recommended pressure, contact the nearest authorized GM servicing facility immediately for inspection and repair or replacement. To locate the nearest GM servicing facility, call GM Customer Assistance.

When tire replacement is needed, replace with a self-sealing tire, because the vehicle does not come with a spare tire or tire changing equipment.

Low-Profile Tires

Caution
Low-profile tires are more susceptible to damage from road hazards or curb impact than standard profile tires. Tire and/or wheel assembly damage can occur when coming into contact with road hazards like potholes, or sharp edged objects, or when sliding into a curb. The warranty does not cover this type of damage. Keep tires set to the correct inflation pressure and when possible, avoid contact with curbs, potholes, and other road hazards.

If the vehicle has 265/50R20, 275/45R21, or 275/40R22 size tires, they are classified as low-profile tires.

Summer Tires

Caution
High performance summer tires have rubber compounds that lose flexibility and may develop surface cracks in the tread area at temperatures below −7 °C (20 °F). Always store high performance summer tires indoors and at temperatures above −7 °C (20 °F) when not in use. If the tires have been subjected to −7 °C (20 °F) or less, let them warm up in a heated space to at least 5 °C (40 °F) for 24 hours or more before being installed or driving a vehicle on which they are installed. Do not apply heat or blow heated air directly on the tires. Always inspect tires before use. See *Tire Inspection* ⇨ *318*.

This vehicle may come with 265/50R20 107H, 275/45R21 107V, or 275/40R22 107V high performance summer tires. These tires have a special tread and compound that are optimized for maximum dry and wet road performance. This special tread and compound will have decreased performance in cold climates, and on ice and snow. It is recommended that winter tires be installed on the vehicle if frequent driving at temperatures below approximately 5 °C (40 °F) or on ice or snow covered roads is expected. See *Winter Tires* ⇨ *306*.

Tire Sidewall Labeling

Useful information about a tire is molded into its sidewall. The example shows a typical passenger tire sidewall.

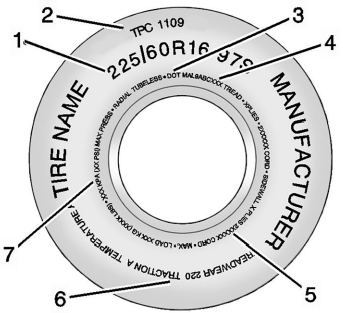

Passenger Tire Example

(1) Tire Size : The tire size is a combination of letters and numbers used to define a particular tire's width, height, aspect ratio, construction type, and service description. See the “Tire Size” illustration later in this section.

(2) TPC Spec (Tire Performance Criteria Specification) : Original equipment tires designed to GM's specific tire performance criteria have a TPC specification code molded onto the sidewall. GM's TPC specifications meet or exceed all federal safety guidelines.

(3) DOT (Department of Transportation) : The Department of Transportation (DOT) code indicates that the tire is in compliance with the U.S. Department of Transportation Motor Vehicle Safety Standards.

DOT Tire Date of Manufacture : The last four digits of the TIN indicate the tire manufactured date. The first two digits represent the week and the last two digits, the year. For example, the third week of the year 2020 would have a 4-digit DOT date of 0320. Week 01 is the first full week (Sunday through Saturday) of each year.

(4) Tire Identification Number (TIN) : The letters and numbers following the DOT code are the Tire Identification Number (TIN). The TIN shows the manufacturer and plant code, tire size, and date the tire was manufactured. The TIN is molded onto both sides of the tire, although only one side may have the date of manufacture.

(5) Tire Ply Material : The type of cord and number of plies in the sidewall and under the tread.

(6) Uniform Tire Quality Grading (UTQG) : Tire manufacturers are required to grade tires based on three performance factors: treadwear, traction, and temperature resistance. For more information, see *Uniform Tire Quality Grading* ⇨ *322*.

(7) Maximum Cold Inflation Load Limit : Maximum load that can be carried and the maximum pressure needed to support that load.

Tire Designations

Tire Size

The example shows a typical passenger vehicle tire size.

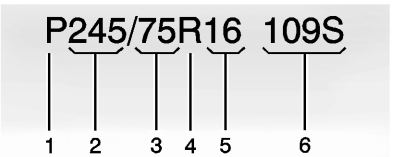

Passenger (P-Metric) Tire

(1) Passenger (P-Metric) Tire : The United States version of a metric tire sizing system. The letter "P" as the first character in the tire size means a passenger vehicle tire engineered to standards set by the U.S. Tire and Rim Association.

(2) Tire Width : The 3-digit number indicates the tire section width in millimeters from sidewall to sidewall.

(3) Aspect Ratio : A 2-digit number that indicates the tire height-to-width measurements. For example, if the tire size aspect ratio is 75, as shown in item (3) of the illustration, it would mean that the tire's sidewall is 75 percent as high as it is wide.

(4) Construction Code : A letter code is used to indicate the type of ply construction in the tire. The letter "R" means radial ply construction; the letter "D" means diagonal or bias ply construction.

(5) Rim Diameter : Diameter of the wheel in inches.

(6) Service Description : These characters represent the load index and speed rating of the tire. The load index represents the load carrying capacity a tire is certified to carry. The speed rating is the maximum speed a tire is certified to carry a load.

Tire Terminology and Definitions

Air Pressure : The amount of air inside the tire pressing outward on each square inch of the tire. Air pressure is expressed in kPa (kilopascal) or psi (pounds per square inch).

Aspect Ratio : The relationship of a tire's height to its width.

Belt : A rubber coated layer of cords that is located between the plies and the tread. Cords may be made from steel or other reinforcing materials.

Bead : The tire bead contains steel wires wrapped by steel cords that hold the tire onto the rim.

Bias Ply Tire : A pneumatic tire in which the plies are laid at alternate angles less than 90 degrees to the centerline of the tread.

Cold Tire Pressure : The amount of air pressure in a tire, measured in kPa (kilopascal) or psi (pounds per square inch) before a tire has built up heat from driving. See *Tire Pressure* ⇨ *311*.

DOT Markings : A code molded into the sidewall of a tire signifying that the tire is in compliance with the U.S. Department of Transportation (DOT) Motor Vehicle Safety Standards. The DOT code includes the Tire Identification Number (TIN), an alphanumeric designator which can also identify the tire manufacturer, production plant, brand, and date of production.

GVWR : Gross Vehicle Weight Rating. See *Vehicle Load Limits* ⇨ *177*.

GAWR FRT : Gross Axle Weight Rating for the front axle. See *Vehicle Load Limits* ⇨ *177*.

GAWR RR : Gross Axle Weight Rating for the rear axle. See *Vehicle Load Limits* ⇨ *177*.

Intended Outboard Sidewall : The side of an asymmetrical tire, that must always face outward when mounted on a vehicle.

Kilopascal (kPa) : The metric unit for air pressure.

Light Truck (LT-Metric) Tire : A tire used on light duty trucks and some multipurpose passenger vehicles.

Load Index : An assigned number ranging from 1 to 279 that corresponds to the load carrying capacity of a tire.

Maximum Inflation Pressure : The maximum air pressure to which a cold tire can be inflated. The maximum air pressure is molded onto the sidewall.

Maximum Load Rating : The load rating for a tire at the maximum permissible inflation pressure for that tire.

Occupant Distribution : Designated seating positions.

Outward Facing Sidewall : The side of an asymmetrical tire that has a particular side that faces outward when mounted on a vehicle. The side of the tire that contains a whitewall, bears white lettering, or bears manufacturer, brand, and/or model name molding that is higher or deeper than the same moldings on the other sidewall of the tire.

Passenger (P-Metric) Tire : A tire used on passenger cars and some light duty trucks and multipurpose vehicles.

Recommended Inflation Pressure : Vehicle manufacturer's recommended tire inflation pressure as shown on the tire placard. See *Tire Pressure* ⇨ *311* and *Vehicle Load Limits* ⇨ *177*.

Radial Ply Tire : A pneumatic tire in which the ply cords that extend to the beads are laid at 90 degrees to the centerline of the tread.

Rim : A metal support for a tire and upon which the tire beads are seated.

Sidewall : The portion of a tire between the tread and the bead.

Speed Rating : An alphanumeric code assigned to a tire indicating the maximum speed at which a tire can operate.

Traction : The friction between the tire and the road surface. The amount of grip provided.

Tread : The portion of a tire that comes into contact with the road.

Treadwear Indicators : Narrow bands, sometimes called wear bars, that show across the tread of a tire when only 1.6 mm (1/16 in) of tread remains. See *When It Is Time for New Tires* ⇨ *319*.

UTQGS (Uniform Tire Quality Grading Standards) : A tire information system that provides consumers with ratings for a tire's traction, temperature, and treadwear. Ratings are determined by tire manufacturers using government testing procedures. The ratings are molded into the sidewall of the tire. See *Uniform Tire Quality Grading* ⇨ *322*.

Vehicle Capacity Weight : The number of designated seating positions multiplied by 68 kg (150 lbs) plus the rated cargo load. See *Vehicle Load Limits* ⇨ *177*.

Vehicle Maximum Load on the Tire : Load on an individual tire due to curb weight, accessory weight, occupant weight, and cargo weight.

Vehicle Placard : A label permanently attached to a vehicle showing the vehicle's capacity weight and the original equipment tire size and recommended inflation pressure. See “Tire and Loading Information Label” under *Vehicle Load Limits* ⇨ *177*.

Tire Pressure

Tires need the correct amount of air pressure to operate effectively.

⚠ Warning

Neither tire underinflation nor overinflation is good. Underinflated tires, or tires that do not have enough air, can result in:

- Tire overloading and overheating, which could lead to a blowout
- Premature or irregular wear
- Poor handling
- Reduced fuel economy for internal combustion engine vehicles
- Reduced range for electric vehicles

Overinflated tires, or tires that have too much air, can result in:

- Unusual wear
- Poor handling
- Rough ride
- Needless damage from road hazards

The Tire and Loading Information label on the vehicle indicates the original equipment tires and the correct cold tire inflation pressures. The recommended pressure is the minimum air pressure needed to support the vehicle's maximum load carrying capacity. See *Vehicle Load Limits* ⇨ *177*.

How the vehicle is loaded affects vehicle handling and ride comfort. Never load the vehicle with more weight than it was designed to carry.

When to Check

Check the pressure of the tires once a month or more.

How to Check

Use a good quality pocket-type gauge to check tire pressure. Proper tire inflation cannot be determined by looking at the tire. Check the tire inflation pressure when the tires are cold, meaning the vehicle has not been driven for at least three hours or no more than 1.6 km (1 mi).

Remove the valve cap from the tire valve stem. Press the tire gauge firmly onto the valve to get a pressure measurement. If the cold tire inflation pressure matches the recommended pressure on the Tire and Loading Information label, no further adjustment is necessary. If the inflation pressure is low, add air until the recommended pressure is reached. If the inflation pressure is high, press on the metal stem in the center of the tire valve to release air.

Recheck the tire pressure with the tire gauge.

Put the valve caps back on the valve stems to keep out dirt and moisture. Use only valve caps designed for the vehicle by GM. Tire Pressure Monitor System sensors could be damaged and would not be covered by the vehicle warranty.

Tire Pressure for High-Speed Operation

⚠ Warning

Driving at high speeds, 160 km/h (100 mph) or higher, puts additional strain on tires. Sustained high-speed driving causes excessive heat buildup and can cause sudden tire failure. This could cause a crash, and you or others could be killed. Some high-speed rated tires require inflation pressure adjustment for high-speed operation. When speed limits and road conditions allow the vehicle to be driven at high speeds, make sure the tires are rated for high-speed operation, are in excellent condition, and are set to the correct cold tire inflation pressure for the vehicle load.

Vehicles with tire sizes listed in the High Speed Operation Inflation Pressures table require inflation pressure adjustment when driving the vehicle at speeds of 160 km/h (100 mph) or higher. Set the cold tire inflation pressure to the corresponding value in the table for the tire size on the vehicle.

High Speed Operation Inflation Pressures	
Tire Size	**Cold Inflation Pressure kPa (psi)**
265/50R20 SL 107H	270 kPa (39 psi)
265/50R20 XL 111H	270 kPa (39 psi)
275/45R21 SL 107V	270 kPa (39 psi)
275/40R22 XL 107H	310 kPa (45 psi)
275/40R22 XL 107V	310 kPa (45 psi)

Return the tires to the recommended cold tire inflation pressure when high-speed driving has ended. See *Vehicle Load Limits* ⇨ *177* and *Tire Pressure* ⇨ *311*.

Tire Pressure Monitor System

The Tire Pressure Monitor System (TPMS) uses radio and sensor technology to check tire pressure levels. The TPMS sensors monitor the air pressure in your tires and transmit tire pressure readings to a receiver located in the vehicle.

Each tire, including the spare (if provided), should be checked monthly when cold and inflated to the inflation pressure recommended by the vehicle manufacturer on the vehicle placard or tire inflation pressure label. (If your vehicle has tires of a different size than the size indicated on the vehicle placard or tire inflation pressure label, you should determine the proper tire inflation pressure for those tires.)

As an added safety feature, your vehicle has been equipped with a tire pressure monitoring system (TPMS) that illuminates a low tire pressure telltale when one or more of your tires is significantly under-inflated.

Accordingly, when the low tire pressure telltale illuminates, you should stop and check your tires as soon as possible, and inflate them to the proper pressure. Driving on a significantly under-inflated tire causes the tire to overheat

and can lead to tire failure. Under-inflation also reduces energy efficiency and tire tread life, and may affect the vehicle's handling and stopping ability.

Please note that the TPMS is not a substitute for proper tire maintenance, and it is the driver's responsibility to maintain correct tire pressure, even if under-inflation has not reached the level to trigger illumination of the TPMS low tire pressure telltale.

Your vehicle has also been equipped with a TPMS malfunction indicator to indicate when the system is not operating properly. The TPMS malfunction indicator is combined with the low tire pressure telltale. When the system detects a malfunction, the telltale will flash for approximately one minute and then remain continuously illuminated. This sequence will continue upon subsequent vehicle start-ups as long as the malfunction exists.

When the malfunction indicator is illuminated, the system may not be able to detect or signal low tire pressure as intended. TPMS malfunctions may occur for a variety of reasons, including the installation of replacement or alternate tires or wheels on the vehicle that prevent the TPMS from functioning properly. Always check the TPMS malfunction telltale after replacing one or more tires or wheels on your vehicle to ensure that the replacement or alternate tires and wheels allow the TPMS to continue to function properly.

See *Tire Pressure Monitor Operation* ⇨ *314*.

Tire Pressure Monitor Operation

This vehicle may have a Tire Pressure Monitor System. The system is designed to warn the driver when a low tire pressure condition exists. Tire Pressure Monitor System sensors are mounted onto each tire and wheel assembly, excluding the spare tire and wheel assembly. The sensors monitor the air pressure in the tires and transmit the tire pressure readings to a receiver located in the vehicle.



Caution

Tire sealant materials are not all the same. A non-approved tire sealant could damage the TPMS sensors. TPMS sensor damage caused by using an incorrect tire sealant is not covered by the vehicle warranty. Always use only the GM approved tire sealant available through your dealer or included in the vehicle.

When a low tire pressure condition is detected, the system illuminates the low tire pressure warning light located on the instrument cluster. If the warning light comes on, stop as soon as possible and inflate the tires to the recommended pressure shown on the Tire and Loading Information label. See *Vehicle Load Limits* ⇨ *177*.

A message to check the pressure in a specific tire displays in the Driver Information Center. The low tire pressure warning light and the Driver Information Center warning message come on each time the vehicle is started until the tires are inflated to the correct inflation pressure. Use the Driver Information Center or infotainment screen to view the tire pressure levels. For additional information and details

about the Driver Information Center operation and displays, see *Driver Information Center (DIC)* ⇨ *113* or *Vehicle Status* ⇨ *114*.

The low tire pressure warning light may come on in cool weather when the vehicle is first started, and then turn off as the vehicle is driven. This could be an early indicator that the air pressure is getting low and needs to be inflated to the proper pressure.

A Tire and Loading Information label shows the size of the original equipment tires and the correct inflation pressure for the tires when they are cold. See *Vehicle Load Limits* ⇨ *177* for an example of the Tire and Loading Information label and its location. Also see *Tire Pressure* ⇨ *311*.

The Tire Pressure Monitor System can warn about a low tire pressure condition, but it does not replace normal tire maintenance. See *Tire Inspection* ⇨ *318*, *Tire Rotation* ⇨ *318*, and *Tires* ⇨ *305*.

Tire Pressure Monitor System Malfunction Light and Message

The Tire Pressure Monitor System will not function properly if one or more of the system sensors are missing or inoperable. When the system detects a malfunction, the low tire pressure warning light flashes for about one minute and then stays on for the remainder of the time the vehicle is on. A Driver Information Center warning message also displays. The malfunction light and Driver Information Center warning message will come on each time the vehicle is started until the problem is corrected. Some of the conditions that can cause these to come on are:

- One of the road tires has been replaced with the spare tire. The spare tire does not have a sensor. The malfunction light and the Driver Information Center message should go off after the road tire is replaced and the sensor matching process is performed successfully. See "Tire Pressure Monitor System Sensor Matching Process" later in this section.
- The sensor matching process was not done or not completed successfully after rotating the tires. The malfunction light and the Driver Information Center message should go off after successfully completing the sensor matching process. See "Tire Pressure Monitor System Sensor Matching Process" later in this section.
- One or more sensors are missing or damaged. The Driver Information Center message and the malfunction light should go off when the sensors are installed and the sensor matching process is performed successfully. See your dealer for service.
- Replacement tires or wheels do not match the original equipment tires or wheels. Tires and wheels other than those recommended could prevent the Tire Pressure Monitor System from functioning properly. See *Buying New Tires* ⇨ *320*.
- Operating electronic devices or being near facilities using radio wave frequencies similar to the Tire Pressure Monitor System could cause the sensors to malfunction.

If the system is not functioning properly, it cannot detect or signal a low tire pressure condition. See your dealer for service if the Tire Pressure Monitor System malfunction light and Driver Information Center message come on and stay on.

Tire Fill Alert

⚠ Warning

Overinflating a tire could cause the tire to rupture and you or others could be injured. Do not exceed the maximum pressure listed on the tire sidewall. See *Tire Sidewall Labeling* ⇨ *308* and *Vehicle Load Limits* ⇨ *177*.

If equipped, this feature provides visual and audible alerts outside the vehicle to help when inflating an underinflated tire to the recommended cold tire pressure.

When the low tire pressure warning light comes on:

1. Park the vehicle in a safe, level place.
2. Place the vehicle in P (Park).
3. Set the parking brake.
4. Add air to the tire that is underinflated.

   The turn signal light closest to the tire being inflated with start flashing. When the recommended pressure is reached, the horn sounds once and the turn signal light will stop flashing and turn solid for several seconds before turning off.

Repeat these steps for all underinflated tires that have illuminated the low tire pressure warning light.

If the tire is overinflated by more than 35 kPa (5 psi), the horn will sound multiple times and the turn signal light will continue to flash for several seconds after filling stops.

To release and correct the pressure, while the turn signal light is still flashing, briefly press the center of the valve stem. When the recommended pressure is reached, the horn sounds once and the turn signal light will stop flashing and turn solid for several seconds before turning off.

If the turn signal light does not flash within 15 seconds after starting to inflate the tire, the tire fill alert has not been activated or is not working.

If the hazard warning flashers are on, the tire fill alert visual feedback will not work properly.

The Tire Pressure Monitor System will not activate the tire fill alert properly under the following conditions:

- There is interference from an external device or transmitter.
- The air pressure from the inflation device is not sufficient to inflate the tire.
- There is a malfunction in the Tire Pressure Monitor System.
- There is a malfunction in the horn or turn signal lights.
- The sensor identification code is not registered to the system.
- The sensor battery is low.

If the tire fill alert does not operate due to system interference, move the vehicle about 1 m (3 ft) back or forward and try again. If the tire fill alert feature is not working, use a tire pressure gauge.

Tire Pressure Monitor System Sensor Matching Process – Auto Learn

Each sensor has a unique identification code. The identification code needs to be matched to a new tire/wheel position after rotating the tires or replacing one or more of the

system sensors. If equipped with Auto Learn, when a tire is installed, the vehicle must be stationary for about 20 minutes before the system recalculates. The relearn process takes up to 10 minutes, driving at a minimum speed of 20 km/h (12 mph). A dash (-) or pressure value will display in the Driver Information Center. See *Driver Information Center (DIC)* ⇨ *113*. A warning message displays in the Driver Information Center if a problem occurs during the relearn process.

Tire Pressure Monitor System Sensor Matching Process – Manual Learn

Each sensor has a unique identification code. The identification code needs to be matched to a new tire/wheel position after rotating the vehicle's tires or replacing one or more of the system sensors. The sensor matching process should also be performed after replacing a spare tire with a road tire containing the Tire Pressure Monitor System sensor. After a successful matching process is completed, the malfunction light and the Driver Information Center message should turn off the next time the vehicle is started.

The sensors are matched to the tire/wheel positions, using a Tire Pressure Monitor System relearn tool, in the following order: driver side front tire, passenger side front tire, passenger side rear tire, and driver side rear tire. See your dealer for service or to purchase a relearn tool. You can also purchase a relearn tool at www.gmglobaltools.com, search on "TPMS Tool," or by calling 844-742-8471.

There are two minutes to match the first tire/wheel position, and five minutes overall to match all four tire/wheel positions. If it takes longer, the matching process stops and must be restarted.

The sensor matching process is:

1. Place the vehicle in P (Park).
2. Set the parking brake.
3. Turn the vehicle on or place the vehicle in Service Mode. See *Power Modes* ⇨ *181*.
4. Select the Vehicle Status icon from the infotainment apps screen.
5. Choose "Tire Pressure" or "Tires," then choose "Relearn Sensors."

   The horn sounds twice to signal the receiver is in relearn mode and the TIRE LEARNING ACTIVE message displays on the Driver Information Center or Infotainment screen.
6. Start with the driver side front tire.
7. Place the relearn tool against the tire sidewall, near the valve stem. Then press the button on the tool to activate the sensor.

   The horn sounds once to confirm that the sensor identification code has been matched to this tire and wheel position.
8. Proceed to the passenger side front tire, and repeat the procedure in Step 7.
9. Proceed to the passenger side rear tire, and repeat the procedure in Step 7.
10. Proceed to the driver side rear tire, and repeat the procedure in Step 7.

    The horn sounds twice to indicate the sensor identification code has been matched to the driver side rear tire, and the sensor matching process is no longer active. The TIRE LEARNING ACTIVE message turns off.
11. Turn the vehicle off.

12. Set all four tires to the recommended air pressure level as indicated on the Tire and Loading Information label.

Tire Inspection

We recommend that the tires, including the spare tire, if the vehicle has one, be inspected for signs of wear or damage at least once a month.

Replace the tire if:

- The indicators at three or more places around the tire can be seen.
- There is cord or fabric showing through the tire's rubber.
- The tread or sidewall is cracked, cut, or snagged deep enough to show cord or fabric.
- The tire has a bump, bulge, or split.
- The tire has a puncture, cut, or other damage that cannot be repaired well because of the size or location of the damage.

Tire Rotation Monitor

If equipped, the Tire Rotation Monitor feature tracks your mileage and alerts you when it is time to schedule a tire rotation. To access this feature, from the infotainment apps screen, select Vehicle Status and navigate to Tire Rotation. See *Vehicle Status* ⇨ *114*.

After rotating the tires, promptly use this feature to reset the Distance since last rotation counter and start tracking for the next rotation. Ensure you only perform the reset after completing the tire rotation.

You can turn the feature alert off. If you do so, you will not receive the Schedule Tire Rotation alert. The mileage counter will remain active.

To perform a reset, or turn the notification off or on, select Tire Rotation on the infotainment apps screen and select your desired action.

To rotate your tires, see *Tire Rotation* ⇨ *318*.

Tire Rotation

Tires should be rotated according to the interval listed in the maintenance schedule. See *Maintenance Schedule* ⇨ *340*.

When rotating the tires, inspect the brake pads for signs of wear. See *Brakes* ⇨ *288*.

Tires are rotated to achieve a more uniform wear for all tires. The first rotation is the most important.

Anytime unusual wear is noticed, rotate the tires as soon as possible, check for proper tire inflation pressure, and check for damaged tires or wheels. If the unusual wear continues after the rotation, check the wheel alignment. See *When It Is Time for New Tires* ⇨ *319* and *Wheel Replacement* ⇨ *323*.

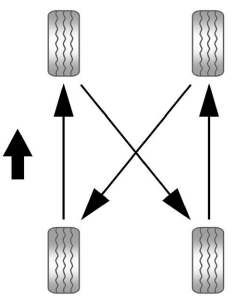

Use this rotation pattern when rotating the tires.

Adjust the front and rear tires to the recommended inflation pressure on the Tire and Loading Information label after the tires have been rotated. See *Tire Pressure* ⇨ *311* and *Vehicle Load Limits* ⇨ *177*.

Reset the Tire Pressure Monitor System. See *Tire Pressure Monitor Operation* ⇨ *314*.

⚠ Warning

Rust or dirt on a wheel, or on the parts to which it is fastened, can cause wheel nuts to become loose over time. The wheel could come off and cause a crash. When changing a wheel, remove any rust or dirt from places where the wheel attaches to the vehicle. In an emergency, a cloth or paper towel can be used; however, use a scraper or wire brush later to remove all rust or dirt.

⚠ Warning

Do not apply grease to the wheel mounting surface, wheel conical seats, or the wheel nuts or bolts. Grease applied to these areas could cause a wheel to become loose or come off, resulting in a crash.

Check that all wheel nuts are properly tightened. See "Wheel Nut Torque" under *Capacities and Specifications* ⇨ *345*.

Lightly coat the inner diameter of the wheel hub opening with wheel bearing grease after a wheel change or tire rotation to prevent corrosion or rust build-up.

When It Is Time for New Tires

Factors, such as maintenance, temperatures, driving speeds, vehicle loading, and road conditions affect the wear rate of the tires.

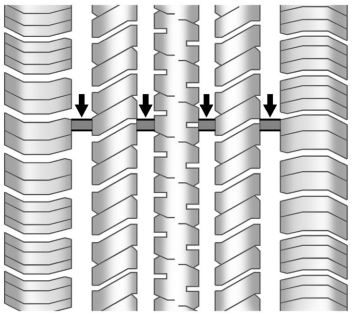

Treadwear indicators are one way to tell when it is time for new tires. Treadwear indicators appear when the tires have only 1.6 mm (1/16 in) or less of tread remaining. See *Tire Inspection* ⇨ *318* and *Tire Rotation* ⇨ *318*.

The rubber in tires ages over time. This also applies to the spare tire, if the vehicle has one, even if it is never used. Multiple factors including temperatures, loading conditions, and inflation pressure maintenance affect how fast aging takes place. GM recommends that tires, including the spare if equipped, be replaced after six years, regardless of tread wear. To identify the age of a tire, use the tire manufacture date, which is the last four digits of the Department of Transportation (DOT) Tire

Identification Number (TIN) molded into one side of the tire sidewall. The last four digits of the Tire Identification Number (TIN) indicate the tire manufactured date. The first two digits represent the week and the last two digits, the year. For example, the third week of the year 2020 would have a 4-digit Department of Transportation (DOT) date of 0320. Week 01 is the first full week (Sunday through Saturday) of each year.

Vehicle Storage

Tires age when stored normally mounted on a parked vehicle. Park a vehicle that will be stored for at least a month in a cool, dry, clean area away from direct sunlight to slow aging. This area should be free of grease, gasoline, or other substances that can deteriorate rubber.

Parking for an extended period can cause flat spots on the tires that may result in vibrations while driving. When storing a vehicle for at least a month, remove the tires or raise the vehicle to reduce the weight from the tires.

Buying New Tires

GM has developed and matched specific tires for the vehicle. The original equipment tires installed were designed to meet General Motors Tire Performance Criteria Specification (TPC Spec) system rating. When replacement tires are needed, GM strongly recommends buying tires with the same Tire Performance Criteria Specification (TPC Spec) rating.

GM's exclusive Tire Performance Criteria Specification (TPC Spec) system considers over a dozen critical specifications that impact the overall performance of the vehicle, including brake system performance, ride and handling, traction control, and tire pressure monitoring performance. GM's Tire Performance Criteria Specification (TPC Spec) number is molded onto the tire's sidewall near the tire size.

⚠ Warning

Tires could explode during improper service. Attempting to mount or dismount a tire could cause injury or death. Only your dealer or authorized tire service center should mount or dismount the tires.

⚠ Warning

Mixing tires of different sizes (other than those originally installed on the vehicle), brands, tread patterns, or types may cause loss of vehicle control, resulting in a crash or other vehicle damage. Use the correct size, brand, and type of tire on all wheels.

⚠ Warning

Using bias-ply tires on the vehicle may cause the wheel rim flanges to develop cracks after many miles of driving. A tire and/or wheel could fail suddenly and cause a crash. Use only radial-ply tires with the wheels on the vehicle.

GM recommends replacing worn tires in complete sets of four. Uniform tread depth on all tires will help to maintain the performance of the vehicle. Braking and handling performance may be adversely affected if all the tires are not replaced at the same time. If proper rotation and

maintenance have been done, all four tires should wear out at about the same time. However, if it is necessary to replace only one axle set of worn tires, place the new tires on the rear axle. See *Tire Rotation* ⇨ *318*.

If the vehicle tires must be replaced with a tire that does not have a Tire Performance Criteria Specification (TPC Spec) number, make sure they are the same size, load range, speed rating, and construction (radial) as the original tires.

Winter tires with the same speed rating as the original equipment tires may not be available for H, V, W, Y and ZR speed rated tires. Never exceed the winter tires' maximum speed capability when using winter tires with a lower speed rating.

The Tire and Loading Information label indicates the original equipment tires on the vehicle. See *Vehicle Load Limits* ⇨ *177*.

Reverse Rim Wheels

⚠ Warning

Reverse Rim Wheels must be mounted to tires using specialized service equipment by your GM Dealer or qualified tire service center. Servicing Reverse Rim Wheels incorrectly can damage the tire, wheel, and vehicle, which could result in a crash causing severe injury or death. Do not attempt to service Reverse Rim Wheels yourself, see your dealer for service.

⚠ Warning

Tires could explode during improper service. Attempting to mount or dismount a tire could cause injury or death. Only your dealer or authorized tire service center should mount or dismount the tires.



This vehicle may be equipped with Reverse Rim Wheels. Reverse Rim Wheels can be identified by the logo on the rim near the service valve, as shown.

Different Size Tires and Wheels

⚠ Warning

If different sized wheels are used, there may not be an acceptable level of performance and safety if tires not recommended for those wheels are selected. This increases the chance of a crash and serious injury. Only use GM specific wheel and tire systems developed for the vehicle, and have them properly installed by a GM certified technician.

If wheels or tires are installed that are a different size than the original equipment wheels and tires, vehicle performance, including its braking, ride and handling characteristics, stability, and resistance to rollover may be affected. If the vehicle has electronic systems such as antilock brakes, rollover airbags, traction control, electronic stability control, or all-wheel drive, the performance of these systems can also be affected.

See *Buying New Tires* ⇨ *320* and *Accessories and Modifications* ⇨ *282*.

Uniform Tire Quality Grading

The following information relates to the system developed by the United States National Highway Traffic Safety Administration (NHTSA), which grades tires by treadwear, traction, and temperature performance. This applies only to vehicles sold in the United States. The grades are molded on the sidewalls of most passenger car tires. The Uniform Tire Quality Grading (UTQG) system does not apply to deep tread, winter tires, compact spare tires, tires with nominal rim diameters of 10 to 12 inches (25 to 30 cm), or to some limited-production tires.

While the tires available on General Motors passenger cars and light trucks may vary with respect to these grades, they must also conform to federal safety requirements and additional General Motors Tire Performance Criteria (TPC) standards.

Quality grades can be found where applicable on the tire sidewall between tread shoulder and maximum section width. For example:

Treadwear 200 Traction AA Temperature A

All Passenger Car Tires Must Conform to Federal Safety Requirements In Addition To These Grades.

Treadwear

The treadwear grade is a comparative rating based on the wear rate of the tire when tested under controlled conditions on a specified government test course. For example, a tire graded 150 would wear one and one-half (1½) times as well on the government course as a tire graded 100. The relative performance of tires depends upon the actual conditions of their use, however, and may depart significantly from the norm due to variations in driving habits, service practices and differences in road characteristics and climate.

Traction

The traction grades, from highest to lowest, are AA, A, B, and C. Those grades represent the tire's ability to stop on wet pavement as measured under controlled conditions on specified government test surfaces of asphalt and concrete. A tire marked C may have poor traction performance. Warning: The traction grade assigned to this tire is based on straight-ahead braking traction tests, and does not include acceleration, cornering, hydroplaning, or peak traction characteristics.

Temperature

The temperature grades are A (the highest), B, and C, representing the tire's resistance to the generation of heat and its ability to dissipate heat when tested under controlled conditions on a specified indoor laboratory test wheel. Sustained high temperature can cause the material of the tire to degenerate and reduce tire life, and excessive temperature can lead to sudden tire failure. The grade C corresponds to a level of performance which all passenger car tires must meet under the Federal Motor Safety Standard No. 109. Grades B and A represent higher levels of performance on the laboratory test wheel than the minimum required by law. Warning: The temperature grade for this tire is established for a tire that is properly inflated and not overloaded. Excessive speed, underinflation, or excessive loading, either separately or in combination, can cause heat buildup and possible tire failure.

Wheel Alignment and Tire Balance

The tires and wheels were aligned and balanced at the factory to provide the longest tire life and best overall performance. Adjustments to wheel alignment and tire balancing are not necessary on a regular basis. Consider an alignment check if there is unusual tire wear or the vehicle is significantly pulling to one side or the other. Some slight pull to the left or right, depending on the slope of the road and/or other road surface variations such as troughs or ruts, is normal. If the vehicle is vibrating when driving on a smooth road, the tires and wheels may need to be rebalanced. See your dealer for proper diagnosis.

Wheel Replacement

⚠ Warning

Using the wrong replacement wheels, wheel bolts, or wheel nuts can be dangerous. It could affect the braking and handling of the vehicle. Tires can lose

(Continued)

Warning (Continued)

air and cause loss of control, resulting in a crash. Always use the correct wheel, wheel bolts, and wheel nuts for replacement.

⚠ Warning

Replacing a wheel with a used one is dangerous. How it has been used or how far it has been driven may be unknown. It could fail suddenly and cause a crash. When replacing wheels, use a new GM original equipment wheel.

Caution

The wrong wheel can also cause problems with bearing life, brake cooling, speedometer or odometer calibration, headlight aim, bumper height, vehicle ground clearance, and tire or tire chain clearance to the body and chassis.

Replace any wheel that is bent, cracked, or badly rusted or corroded. If wheel nuts keep coming loose, the wheel, wheel bolts, and wheel nuts should be replaced. If the wheel leaks air, replace it. Some aluminum wheels can be repaired. See your dealer if any of these conditions exist.

Your dealer will know the kind of wheel that is needed.

Each new wheel should have the same load-carrying capacity, diameter, width, offset, and be mounted the same way as the one it replaces.

Replace wheels, wheel bolts, wheel nuts, or Tire Pressure Monitor System sensors with new GM original equipment parts.

Tire Chains and Other Traction Devices

⚠ Warning

Do not use tire chains if the vehicle has a tire size(s) listed below. There is not enough clearance. Tire chains used on

(Continued)

Warning (Continued)

a vehicle without the proper amount of clearance can cause damage to the brakes, suspension, or other vehicle parts. The area damaged by the tire chains could cause loss of control and a crash. Use another type of traction device only if its manufacturer recommends it for the vehicle's tire size combination and road conditions. Follow that manufacturer's instructions. To avoid vehicle damage, drive slow and readjust or remove the traction device if it contacts the vehicle. Do not spin the wheels. If traction devices are used, install them on the tires of the drive axle only.

- 265/50R20
- 275/40R22

⚠ Warning

Do not use tire textile traction devices, such as snow socks, if the vehicle has a tire size(s) listed below. There is not enough clearance. Textile/fabric traction devices

(Continued)

Warning (Continued)

used on a vehicle without the proper amount of clearance can cause damage to the brakes, suspension, or other vehicle parts. The area damaged by the tire textile/fabric traction device could cause loss of control and a crash. Use another type of traction device only if its manufacturer recommends it for the vehicle's tire size combination and road conditions. Follow that manufacturer's instructions. To avoid vehicle damage, drive slow and readjust or remove the traction device if it contacts the vehicle. Do not spin the wheels. If traction devices are used, install them on the tires of the drive axle only.

- 275/40R22

Caution

If your vehicle is equipped with the tire size(s) listed below, use textile traction devices only, such as snow socks, that are the proper size for the tires. Install

(Continued)

Caution (Continued)

them on the tires of the rear axle only. Drive slowly and follow the traction device manufacturer's instructions. Driving too fast or spinning the wheels, with the traction device installed, can damage the traction device.

- 265/50R20

If a Tire Goes Flat

⚠ Warning

Driving on a flat tire will cause permanent damage to the tire. Re-inflating a tire after it has been driven on while severely underinflated or flat may cause a blowout and a serious crash. Never attempt to re-inflate a tire that has been driven on while severely underinflated or flat. Have your dealer or an authorized tire service center repair or replace the flat tire as soon as possible.

It is unusual for a tire to blow out while driving, especially if the tires are maintained properly. It is much more likely for a tire to experience a slow leak. See *Tires* ⇨ *305*.

In the event of a blowout, follow these tips:

- A front tire blowout causes the vehicle to pull toward the side of the flat. Take your foot off the accelerator pedal and grip the steering wheel firmly. Steer to maintain lane position, and then gently brake to a stop.
- A rear blowout, particularly on a curve, acts much like a skid and may require the same correction as used in a skid. Stop pressing the accelerator pedal and steer to straighten the vehicle. It may be very bumpy and noisy. Gently brake to a stop.

The vehicle has no spare tire, no tire changing equipment, and no place to store a tire.

If the vehicle has self-sealing tires, see *Self-Sealing Tires* ⇨ *307*. Tread punctures typically will not cause tires to lose air. However, if the vehicle does get a flat tire, there is no spare tire, tire changing equipment, or place to store a tire. Contact Roadside Assistance for help.

If a tire goes flat, avoid further tire and wheel damage by driving slowly to a level place, well off the road, if possible. Turn on the hazard warning flashers. See *Hazard Warning Flashers* ⇨ *125*.

Jump Starting

Jump Starting - North America

For more information about the vehicle battery, recovery, and reset process, see *Battery - North America* ⇨ *290*.

If the vehicle battery is dead, follow these steps to safely use another vehicle and jumper cables to start your vehicle.

⚠ Warning

WARNING: Battery posts, terminals and related accessories can expose you to chemicals including lead and lead compounds, which are known to the State of California to cause cancer and birth defects or other reproductive harm. Wash hands after handling. For more information go to www.P65Warnings.ca.gov.

See *California Proposition 65 Warning* ⇨ *1*.

⚠ Warning

Batteries can hurt you. They can be dangerous because:

- They contain acid that can burn you.
- They contain gas that can explode or ignite.
- They contain enough electricity to burn you.

Use eye protection when handling the battery. If you do not follow these steps exactly, some or all of these things can hurt you.

⚠ Warning

Charging the 12-volt battery and the high voltage battery at the same time may result in overheating or failure. Do not attempt to charge the 12-volt battery and the high voltage battery at the same time. If jumpstarting fails, see your dealer for service.

Caution

The vehicle is equipped with an AGM/VRLA 12-volt battery, which can be damaged by using the incorrect type of trickle charger. An AGM/VRLA-compatible charger must be used, with the appropriate setting selected. Follow the trickle charger manufacturer instructions.

Caution

Ignoring these steps could result in costly damage to the vehicle that would not be covered by the vehicle warranty. Trying to start the vehicle by pushing or pulling it will not work, and it could damage the vehicle.

Caution

If the jumper cables are connected or removed in the wrong order, electrical shorting may occur and damage the vehicle. The repairs would not be covered by the vehicle warranty. Always connect

(Continued)

Caution (Continued)

and remove the jumper cables in the correct order, making sure that the cables do not touch each other or other metal.

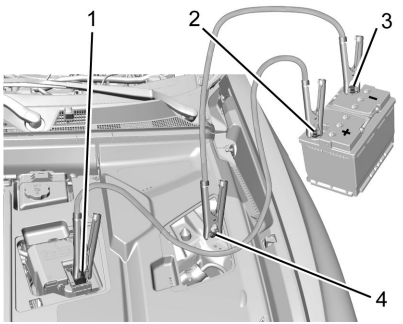

Vehicles with Underhood Compartment Covers Shown, Vehicles without Underhood Compartment Covers Similar

Connection Points and Sequence

1. Discharged Battery Positive (+) Terminal
2. Good Battery Positive (+) Terminal
3. Good Battery Negative (–) Terminal

4. Discharged Battery Negative (–) Grounding Point

The discharged battery positive (+) terminal and the discharged battery negative (–) grounding point are on the driver side of the vehicle.

The good battery negative (–) terminal and the good battery positive (+) terminal are on the battery of the vehicle providing the jump start.

The discharged battery positive (+) terminal and the discharged battery negative (–) grounding point are under a covers. Remove the cover to expose the terminal.

Caution

If the other vehicle does not have a 12-volt system with a negative ground, both vehicles can be damaged. Only use a vehicle that has a 12-volt system with a negative ground for jump starting.

1. Check the other vehicle. It must have a 12-volt battery with a negative ground system.

Caution

If the vehicles touch each other while jump starting, a ground connection may occur that disables your vehicle and/or damages the electrical systems of one or both vehicles.

2. Get the vehicles close enough so the jumper cables can reach, but make sure the vehicles are not touching each other.

   To avoid the possibility of the vehicles rolling, set the parking brake firmly on both vehicles involved in the jump start procedure. Put the vehicles into P (Park). If the other vehicle has a manual transmission, put the vehicle in N (Neutral) before setting the parking brakes.

Caution

If any accessories are left on or plugged in during the jump starting procedure, they could be damaged. The repairs would not be covered by the vehicle warranty. Whenever possible, turn off or unplug all accessories on either vehicle when jump starting.

3. Turn off both vehicles. Unplug unnecessary accessories plugged into the cigarette lighter or the accessory power outlet. Turn off the radio and all lights that are not needed.
4. Open the hood. See *Hood* ⇨ *283*.

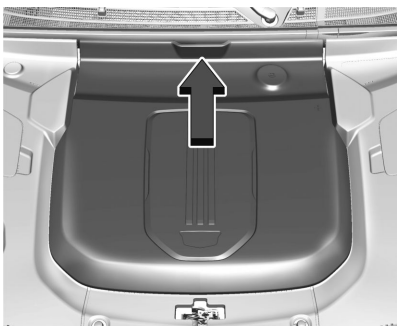

Vehicles with Underhood Compartment Covers Shown, Vehicles without Underhood Compartment Covers Similar

5. To open the lid, pull the handle to disengage the clips and remove the cover.
6. Locate the battery positive (+) terminal and negative (–) grounding point.

7. Check that the jumper cables do not have loose or missing insulation. If they do, you could get a shock. The vehicles could be damaged too.
8. Connect one end of the red positive (+) cable to the discharged battery positive (+) terminal. Do not let the other end touch metal.
9. Connect the other end of the red positive (+) cable to the good battery positive (+) terminal.
10. Connect one end of the black negative (−) cable to the good battery negative (−) terminal.

    Do not let the other end touch anything until the next step.
11. Connect the other end of the negative (−) cable to the discharged battery negative (−) grounding point.
12. Now start the vehicle with the good battery and keep the vehicle running for a while.
13. Turn the vehicle with the dead battery on, then off. Do not operate or interact with the vehicle for 15 minutes to allow the system to reset.
14. After the system rests, try to start the vehicle that had the dead battery. If it will not start after a few tries, have your vehicle serviced.

Jumper Cable Removal

Reverse steps 9–12 exactly when removing the jumper cables.

After starting the disabled vehicle and removing the jumper cables, allow it to idle for several minutes.

Towing the Vehicle

Transporting a Disabled Vehicle

Caution
Incorrectly transporting a disabled vehicle may cause damage to the vehicle. Use proper tire straps to secure the vehicle to the flatbed tow truck. Do not strap or hook to any frame, underbody, or suspension component not specified below. Do not move vehicles with drive axle tires on the ground. Damage is not covered by the vehicle warranty.

Caution
The vehicle may be equipped with an Electric Parking Brake (EPB) and/or an electronic shifter. In the event of a loss of 12-volt battery power, the EPB cannot be released, and the vehicle cannot be shifted to N (Neutral). Tire skates or dollies must be used under the non-rolling tires to prevent damage while loading/unloading the vehicle. Dragging the vehicle will cause damage not covered by the vehicle warranty.

Caution
The vehicle may be equipped with a tow eye. Improper use of the tow eye may cause damage to the vehicle and is not covered by the vehicle warranty. If equipped, use the tow eye to load the vehicle onto a flatbed tow truck from a flat road surface, or to move the vehicle a very short distance at a walking pace. The tow eye is not designed for off-road recovery. The vehicle must be in N (Neutral) with the Electric Parking Brake (EPB) released when using the tow eye.

Contact a professional towing service to transport a disabled vehicle. GM recommends a flatbed tow truck to transport a disabled vehicle. Use ramps to help reduce approach angles, if necessary.

If equipped, a tow eye may be located near the spare tire or emergency jack. Do not use the tow eye to pull the vehicle from snow, mud, sand, or a ditch. Tow eye threads may have right- or left-hand threads. Use caution when installing or removing the tow eye.

The vehicle must be in N (Neutral) and the electric parking brake must be released when loading the vehicle onto a flatbed tow truck.

- If the vehicle will not start but still has 12-volt battery power, buckle the driver seat belt then press and hold the brake pedal for 60 seconds and shift into N (Neutral).
- If the vehicle is equipped with car wash mode and has 12-volt battery power, see "Car Wash Mode" under *Electric Drive Unit* ⇨ *183* to place the vehicle in N (Neutral).
- If the 12-volt battery is dead and/or the vehicle will not start, the vehicle will not move. Try to jump start the vehicle. See *Jump Starting - North America* ⇨ *325* and if the jump start is successful, retry the "Car Wash Mode" procedure.
- If jump starting is unsuccessful, the vehicle will not move. Tire skates or dollies must be used under the non-rolling tires to prevent vehicle damage.

Front Tow Eye Attachment Point

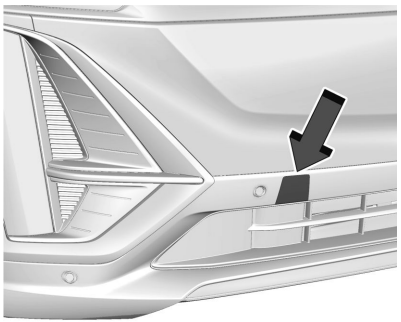

1. Carefully open the cover on the fascia by using the small notch that conceals the tow eye socket.

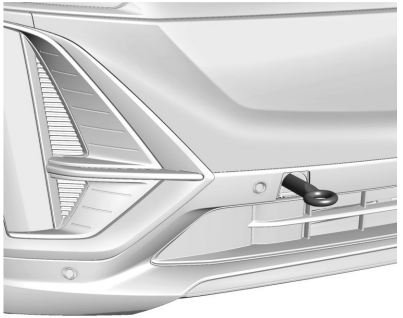

2. Install the tow eye into the socket and turn it until it is fully tightened. When the tow eye is removed, reinstall the cover with the notch in the original position.

Recreational Vehicle Towing

Caution
Dolly towing or dinghy towing may damage the vehicle. Always put the vehicle on a flatbed truck or trailer.

This vehicle was neither designed nor intended to be towed with any of its wheels on the ground. If your vehicle is disabled and needs to be towed, see *Transporting a Disabled Vehicle* ⇨ *328*.

Appearance Care

Exterior Care

Locks

Locks are lubricated at the factory. Only use a de-icing agent when absolutely necessary, and have the locks greased after using the de-icing agent. See *Recommended Fluids and Lubricants* ⇨ *343*.

Washing the Vehicle

⚠ Warning

Do not power wash any part of the vehicle's interior, including the vinyl floor covering. This could damage safety and other systems in the vehicle, which would not be covered by the vehicle warranty.

Caution

Do not use petroleum-based, acidic, or abrasive cleaning agents as they can damage the vehicle's paint, metal, or plastic parts. If damage occurs, it would not be covered by the vehicle warranty. Approved cleaning products can be obtained from your dealer. Follow all manufacturer directions regarding correct product usage, necessary safety precautions, and appropriate disposal of any vehicle care product.

To preserve the exterior finish, wash it often and out of direct sunlight.

Take care to wash materials such as calcium chloride and other salts, ice melting agents, road oil and tar, tree sap, bird droppings, chemicals from industrial chimneys, etc. from the finish as soon as possible. These materials can damage the finish if they remain on painted surfaces.

Automatic Car Wash

Caution

To avoid damage to a matte paint finish, do not use an automatic car wash equipped with brushes or scrubbers. Only use touchless automatic car washes.

When using an automatic car wash, follow the posted instructions carefully.

Before entering the wash:

- Close all windows and sunroof, if equipped.
- Turn off the windshield wipers and rear window wipers, if equipped.
- Remove any acccessories that can be damaged or interfere with car wash equipment.
- Close the charge port door.

During the wash:

- If using an automatic car wash with a conveyor system, drive onto the conveyor system, then put the vehicle in N (Neutral).
- If using an automatic car wash without a conveyor system, put the vehicle in N (Neutral), then set the parking brake to

prevent the power charge port door, if equipped, from opening unintentionally during the car wash.

Hand Wash

Thoroughly rinse all cleaning agents before and after hand washing. Agents left to dry on the exterior may stain the finish.

Dry the exterior finish with a soft, clean chamois or an all-cotton towel to avoid surface scratches and water spotting.

Cleaning Underhood Components

Caution
Do not power wash any component under the hood that has this  symbol. This could cause damage that would not be covered by the vehicle warranty.

Only use water when cleaning underhood components. Solvents and aggressive cleaners can be harmful.

Caution
Avoid using high-pressure washers closer than 30 cm (12 in) to the surface of the vehicle. Use of power washers exceeding 8,274 kPa (1,200 psi) can result in damage or removal of paint and decals.

If you choose to use a power washer, use care when handling and follow these criteria:

- Keep water pressure below 8,000 kPa (1,160 PSI).
- Keep water temperature below 80 °C (180 °F).
- Use a spray nozzle with a 40-degree-wide or greater angle spray pattern.
- Keep the nozzle at least 30 cm (12 in) away from all surfaces.

Finish Care

Caution
Do not apply waxes or polishes to uncoated plastic, vinyl, rubber, decals, simulated wood, flat paint, or metal mesh grilles as damage can occur.

Caution
Do not apply waxes or polishes to uncoated plastic, vinyl, rubber, decals, simulated wood, or matte paint as damage can occur.

Caution
Machine compounding or aggressive polishing on a basecoat/clearcoat paint finish may damage it. Use only non-abrasive waxes and polishes that are made for a basecoat/clearcoat paint finish on the vehicle.

Performing occasional hand waxing or mild polishing removes residue from the paint finish. Do not apply aftermarket clearcoat sealant/wax. See your dealer for approved cleaning products.

Avoid rubbing the finish vigorously. This can create bright spots and an uneven appearance on the finish.

Airborne pollutants can cause blotchy, ring-shaped discolorations, and small, irregular dark spots etched into the paint surface. If painted surfaces are damaged, see your dealer to have the damage assessed and repaired.

To keep paint finish looking new, keep the vehicle garaged or covered whenever possible.

Protecting Exterior Bright Metal Moldings

Caution
Failure to clean and protect the bright metal moldings can result in a hazy white finish or pitting. This damage would not be covered by the vehicle warranty.

The bright metal moldings on the vehicle are made of aluminum, chrome, or stainless steel. To prevent damage, always follow these cleaning instructions:

- Be sure the molding is cool to the touch before applying any cleaning solution.
- Use only approved cleaning solutions for aluminum, chrome, or stainless steel. Some cleaners are highly acidic or contain alkaline substances and can damage the moldings.
- Always dilute a concentrated cleaner according to the manufacturer's instructions.
- Do not use cleaners that are not intended for automotive use.
- Use a nonabrasive wax on the vehicle after washing to protect and extend the molding finish.

Cleaning Exterior Lights/Lenses, Emblems, Decals, and Stripes

Caution
Failure to clean lights properly can cause damage to the light cover that would not be covered by the vehicle warranty.

Caution
Using wax on low gloss black finish stripes can increase the gloss level and create a non-uniform finish. Clean low gloss stripes with soap and water only.

Use lukewarm or cold water, a soft cloth, and a car washing soap to clean exterior lights, lenses, emblems, decals, and stripes. Follow the instructions under "Washing the Vehicle" previously in this section.

Light covers are made of plastic and may have a UV protective coating. Do not clean or wipe them while they are dry. This can cause scratches to the surface of the light cover.

Do not use any of the following on light covers:

- Abrasive or caustic agents.
- Washer fluids and other cleaning agents in higher concentrations than suggested by the manufacturer.
- Solvents, alcohols, fuels, or other harsh cleaners.
- Ice scrapers or other hard items.

- Aftermarket appearance caps or covers while the lights are illuminated. Excessive heat may be generated and can damage the covers.

Air Intakes

Clear debris from the air intakes between the hood and windshield when washing the vehicle.

Windshield and Wiper Blades

Clean the outside of the windshield with glass cleaner.

Clean rubber wiper blades using a lint-free cloth or paper towel soaked with windshield washer fluid or a mild detergent. Wash the windshield thoroughly when cleaning the blades. Bugs, road grime, sap, and a buildup of vehicle wash/wax treatments may cause wiper streaking.

Extreme dusty conditions, sand, salt, heat, sun, snow, and ice can cause damage. Replace the wiper blades when they are worn or damaged.

Weatherstrips

Apply weatherstrip lubricant once a year to help weatherstrips last longer, seal better, and not stick or squeak. Hot, dry climates may require more frequent application.

Use a clean cloth to remove any black marks caused by weatherstrips.

Tires, Wheels, and Wheel Trim

Caution

Using petroleum-based tire dressing products on the vehicle may damage the paint finish and/or tires. When applying a tire dressing, always wipe off any overspray from all painted surfaces on the vehicle.

Use a stiff brush with tire cleaner to clean the tires.

Caution

To avoid surface damage on wheels and wheel trim, do not use strong soaps, chemicals, abrasive polishes, cleaners, or brushes. Use only GM approved cleaners. Do not drive the vehicle through an automatic car wash that uses silicon carbide tire/wheel cleaning brushes. Damage could occur and the repairs would not be covered by the vehicle warranty.

Use a soft, clean cloth with mild soap and water to clean the wheels. After rinsing thoroughly with clean water, dry with a soft, clean towel. Wax as desired.

Body Component Lubrication

Lubricate all key lock cylinders, hood hinges, liftgate hinges, and the steel charge port door hinge unless the components are plastic. See *Recommended Fluids and Lubricants* ⇨ *343*.

Underbody Maintenance

Caution

For electric or hybrid vehicles, perform regular care around the high voltage system. Do not direct high pressure spray at or around connectors, cables, or any of the vents. High pressure can damage the seals and battery components.

Every six months, flush any corrosive materials from the underbody with plain water. Take care to thoroughly clean any areas where mud and other debris can collect. If equipped, extend power assist steps and use a high pressure wash to clean all joints and gaps.

Do not directly power wash the transfer case and/or front/rear axle output seals. High pressure water get into the seals and contaminate the fluid. Contaminated fluid decreases the life of the transfer case and/or axles and should be replaced.

Sheet Metal Damage

If the vehicle is damaged and requires sheet metal repair or replacement, use original manufacturer replacement parts which provide corrosion protection and maintain the vehicle warranty.

If original manufacturer replacement parts are not used, make sure the body repair shop applies anti-corrosion material to parts repaired or replaced.

Finish Damage

Quickly repair minor chips and scratches with touch-up materials available from your dealer to avoid corrosion. See your dealer's body and paint shop to correct larger areas of finish damage.

Interior Care

To prevent dirt particle abrasions to the interior, regularly clean it. Before using cleaners, read and follow all safety instructions on the label. While cleaning the interior, open the doors and windows for proper ventilation. Newspapers or dark garments can transfer color to the interior.

Caution

Immediately remove cleaners, hand lotions, sunscreen, and insect repellent from all interior surfaces or permanent damage may result.

Caution

Use cleaners specifically designed for the surfaces being cleaned to prevent permanent damage to the vehicle. Apply all cleaners directly to a cleaning cloth. Do not spray cleaners on any switches or controls.

When using liquid soap cleaners, follow the directions on the specific cleaner or soap solution for dilution instructions.

Caution

To prevent damage:

- Never use a razor or any other sharp object to remove soil from any interior surface.

(Continued)

Caution (Continued)

- Never use a brush with stiff bristles.
- Never rub any surface aggressively or with too much pressure.
- Do not get any exposed electrical components wet.
- Do not use laundry detergents or dishwashing soaps with degreasers. Do not use solutions that contain strong or caustic soap.
- Do not heavily saturate the upholstery when cleaning.
- Do not use solvents or cleaners containing solvents.
- Do not use disinfecting wipes that are scented or contain bleach. Do not use wipes or cleaners that show a color transfer to the wipe or change the appearance of the interior surface when used.
- Do not use scented or gel-type hand sanitizers. If hand sanitizer comes in contact with interior surfaces of the

(Continued)

Caution (Continued)

vehicle, blot immediately and clean with a soft cloth dampened with a mild soap and water solution.

Interior Glass

Caution

To prevent scratching, never use abrasive cleaners on automotive glass. Abrasive cleaners or aggressive cleaning may damage the rear window defogger.

Use a microfiber cloth fabric dampened with water to clean interior glass. Wipe droplets left behind with a clean dry cloth. If necessary, use a commercial glass cleaner after cleaning with plain water.

Cleaning the interior windshield with water during the first three to six months of ownership will reduce tendency to fog.

Head-Up Display (HUD)

Clean the inside of the windshield to remove any dirt or film that could reduce the sharpness or clarity of the Head-Up Display (HUD) image.

Clean the Head-Up Display (HUD) lens with a soft cloth sprayed with glass cleaner. Wipe the lens gently, then dry it. See *Head-Up Display (HUD)* ⇨ *116*.

Speaker Covers

Vacuum gently around speaker covers to prevent damage. Clean spots with water and mild soap.

Coated Moldings

When cleaning coated moldings:

- When lightly soiled, wipe with a sponge or soft, lint-free cloth dampened with water.
- When heavily soiled, use warm soapy water.

Vinyl/Rubber Floor and Mats

⚠ Warning

Do not use cleaners that contain silicone, wax-based products, or cleaners that increase gloss on vinyl/rubber floor and mats. These cleaners can permanently change the appearance and feel of the

(Continued)

Warning (Continued)

vinyl/rubber and can make the floor slippery. Your foot could slip while operating the vehicle, and you could lose control, resulting in a crash. You or others could be injured.

If equipped with vinyl/rubber floor and mats, use a soft cloth and/or brush dampened with water to remove dust and loose dirt. For more thorough cleaning, use a mild soap and water solution.

Fabric/Carpet/Suede

Before cleaning, remove as much solid soils as possible, then gently vacuum the surface using a soft brush attachment. If a rotating vacuum brush attachment is used, only use it on the floor carpet.

Gently blot liquids with a paper towel. Continue blotting until no more soil can be removed.

To clean:

1. Saturate a clean, lint-free colorfast cloth with water. Microfiber cloth is recommended to prevent lint transfer to the fabric or carpet.
2. Remove excess moisture by gently wringing until water does not drip from the cleaning cloth.
3. Start on the outside edge of the soil and gently rub toward the center. Fold the cleaning cloth to a clean area frequently to prevent forcing the soil into the fabric.
4. Continue gently rubbing the soiled area until there is no longer any color transfer from the soil to the cleaning cloth.
5. If the soil is not completely removed, use a mild soap solution followed only by plain water.
6. After cleaning, use a paper towel to blot excess moisture.

Stubborn stains may require a commercial upholstery cleaner or spot lifter. Test a small hidden area for colorfastness before using a commercial upholstery cleaner or spot lifter. If ring formation occurs, clean the entire fabric or carpet.

Cleaning High Gloss Surfaces, Vehicle Information, and Radio Displays

Caution

Do not attach a device with a suction cup to the display. This may cause damage and would not be covered by the vehicle warranty.

1. Use a soft bristle brush to remove any dirt from the high gloss surface/display.
2. Gently clean the surface/display with a clean microfiber cloth that has not been bleached or washed with fabric softener. Never use window cleaners or solvents. Rinse the microfiber cloth thoroughly and air dry before next use.

Instrument Panel, Leather, Vinyl, Plastic Surfaces, Low Gloss Paint Surfaces, and Natural Open Pore Wood Surfaces

Caution

Soaking or saturating leather, especially perforated leather, as well as other interior surfaces, may cause permanent damage. Wipe excess moisture from these surfaces after cleaning and allow them to dry naturally. Never use heat, steam, or spot removers. Do not use liquids that contain alcohol or solvents on leather seats. Do not use cleaners that contain silicone or wax-based products. Cleaners containing these solvents can permanently change the appearance and feel of leather or soft trim and are not recommended.

Caution

Use of air fresheners may cause permanent damage to plastics and painted surfaces. If an air freshener comes in contact with any plastic or painted surface in the vehicle,

(Continued)

Caution (Continued)

blot immediately and clean with a soft cloth dampened with a mild soap solution. Damage caused by air fresheners would not be covered by the vehicle warranty.

Use compressed air or a vacuum to remove liquid or dust under the Multi-Functional Controller cap, if equipped.

To remove dust and dirt from knobs and crevices on the instrument cluster:

1. Use a soft bristle brush.
2. Wipe with a soft microfiber cloth dampened with water. Use a mild soap and water solution for more thorough cleaning.

Do not use cleaners that increase gloss, especially on the instrument panel. Reflected glare can decrease visibility through the windshield under certain conditions.

Cargo Cover and Convenience Net

If equipped, wash with warm water and mild detergent. Do not use chlorine bleach. Rinse with cold water, and then dry completely.

Care of Seat Belts

⚠ Warning

Do not bleach or dye seat belt webbing. It may severely weaken the webbing. In a crash, they might not be able to provide adequate protection. Clean and rinse seat belt webbing only with mild soap and lukewarm water. Allow the webbing to dry.

Keep belts clean and dry.

Floor Mats

⚠ Warning

If a floor mat is the wrong size or is not properly installed, it can interfere with the pedals. Interference with the pedals can cause unintended acceleration and/or increased stopping distance which can cause a crash and injury. Make sure the floor mat does not interfere with the pedals.

The original equipment floor mats are specially designed for your vehicle. If the floor mats need replacing, see “Removing and Replacing the Floor Mats” later in this section.

Proper Use:

- Use only GM-certified floor mats.
- Do not use a floor mat if the vehicle is not equipped with a floor mat retainer on the driver side floor.
- Use the floor mat with the correct side up. Do not turn it over.
- Do not place anything on top of the driver side floor mat.
- Use only a single floor mat on the driver side.

Removing and Replacing the Floor Mats

The driver side floor mat is held in place by two button-type carpet retainers.



1. Pull up on the rear of the floor mat to unlock each retainer and remove.
2. Reinstall by lining up the floor mat retainer openings over the button-type carpet retainers and snapping them into position.
3. Make sure the floor mat is properly secured in place. Verify the floor mat does not interfere with the pedals.

Cleaning Rubber Floor Mats (All-Weather Mats and Floor Liners)

See “Vinyl/Rubber Floor and Mats” under *Interior Care* ⇨ *334* for important cleaning information.

Service and Maintenance

General Information
General Information 339
Maintenance Schedule
Maintenance Schedule 340
Multi-Point Vehicle Inspection (MPVI)
Multi-Point Vehicle Inspection (MPVI) 341
Owner Checks and Services
Owner Checks and Services 342
Recommended Fluids, Lubricants, and Parts
Recommended Fluids and Lubricants 343
Maintenance Records
Maintenance Records 344

General Information

⚠ Warning

Performing maintenance work can be dangerous and can cause serious injury. Perform maintenance work only if the required information, proper tools, and equipment are available. If they are not, see your dealer to have a trained technician do the work. See *Doing Your Own Service Work* ⇨ *282*.

Caution

Damage caused by improper maintenance can lead to costly repairs and may not be covered by the vehicle warranty. Maintenance intervals, checks, inspections, recommended fluids, and lubricants are important to keep the vehicle in good working condition.

Do not have chemical flushes that are not approved by GM performed on the vehicle. The use of flushes, solvents, cleaners,

(Continued)

Caution (Continued)

or lubricants that are not approved by GM could damage the vehicle, requiring expensive repairs that are not covered by the vehicle warranty.

Your vehicle is an important investment. This section describes the required maintenance for the vehicle. Follow this schedule to help protect against major repair expenses resulting from neglect or inadequate maintenance. It may also help to maintain the value of the vehicle if it is sold. It is the responsibility of the owner to have all required maintenance performed.

Your dealer has trained technicians who can perform required maintenance using genuine replacement parts. They have up-to-date tools and equipment for fast and accurate diagnostics. Many dealers have extended evening and Saturday hours, courtesy transportation, and online scheduling to assist with service needs.

Your dealer recognizes the importance of providing competitively priced maintenance and repair services. With trained technicians, the dealer is the place for routine maintenance

such as tire rotations and additional maintenance items like tires, brakes, batteries, and wiper blades.

The Tire Rotation and Required Services are the responsibility of the vehicle owner. It is recommended to have your dealer perform these services every 12 000 km/7,500 mi. Proper vehicle maintenance helps to keep the vehicle in good working condition.

The Additional Required Services are for vehicles that:

- Carry passengers and cargo within recommended limits on the Tire and Loading Information label. See *Vehicle Load Limits* ⇨ *177*.
- Are driven on reasonable road surfaces within legal driving limits.

Maintenance Schedule

Rotate Tires and Perform Required Services Every 12 000 km (7,500 mi)

- Rotate the tires. Rotating the tires helps achieve a more uniform wear. The first rotation is the most important. Anytime you notice unusual tire wear, rotate the tires as soon as possible, check for proper tire inflation pressure, and check for damage to tires or wheels. If unusual wear continues after a rotation, check the wheel alignment.

  See *When It Is Time for New Tires* ⇨ *319* and *Wheel Replacement* ⇨ *323*.
- Perform the Multi-Point Vehicle Inspection. See *Multi-Point Vehicle Inspection (MPVI)* ⇨ *341*.
- Lubricate body components. See *Exterior Care* ⇨ *330*.

Additional Required Services — Normal Service

Every 36 000 km (22,500 mi)

Replace the passenger compartment air filter. Or every 24 months, whichever comes first. More frequent passenger compartment air filter replacement may be needed if driving in areas with heavy traffic, poor air quality, high dust levels, or environmental allergens. Passenger compartment air filter replacement may also be needed if there is reduced airflow, window fogging, or odors. Your GM dealer can help determine when to replace the filter.

Every 161 000 km (100,000 mi)

Replace the hood and/or body lift support gas struts. Or every 10 years, whichever comes first. See *Gas Strut(s)* ⇨ *294*.

Every 240 000 km (150,000 mi)

Drain and fill the coolant circuits. Or every five years, whichever comes first. See *Cooling System* ⇨ *286*.

Severe Conditions Requiring More Frequent Maintenance

- Mainly driven in heavy city traffic in hot weather.
- Mainly driven in hilly or mountainous terrain.
- Frequently towing a trailer.
- Used for high speed or competitive driving.
- Used for taxi, police, or delivery service.

Additional Required Services — Severe Service

Every 72 000 km (45,000 mi)

- Change electric drive unit fluid. See *Recommended Fluids and Lubricants* ⇨ *343*.

Owner Checks and Services

Every Five Years

Replace the brake fluid every five years. See *Brake Fluid* ⇨ *289*.

Every Seven Years

Replace the air conditioning desiccant every seven years. This service helps the longevity and efficient operation of the air conditioning system. This service can be complex. See your dealer.

Multi-Point Vehicle Inspection (MPVI)

A Multi-Point Vehicle Inspection completed by a trained technician is a maintenance assessment of your vehicle. The benefit of the Multi-Point Vehicle Inspection is to identify service items that require immediate attention and those that may require attention in the future.

The technician will perform the following checks on your vehicle. You can obtain a copy of the appropriate Multi-Point Vehicle Inspection checklist on your country's GM Certified Service website. For a complete list of checks, inspections, and services, see your dealer.

Some items may not apply to your vehicle and/or region.

Diagnostics

- OnStar active, if equipped
- Service history/recall check

Exterior Lights

- Visual inspection

Windshield and Wipers

- Visual inspection

12 Volt Battery

- Battery visual inspection
- Battery test results
- Battery cables and connections

Systems, Fluids, and Visible Leak Inspection

- Electric Drive Unit
- Drive axle
- Transfer case
- Power electronics cooling system
- Windshield washer fluid

Tire Inspection

- Tire pressure, tread depth, and wear
- Rotation, if applicable
- Alignment check, optional
- Reset tire pressure monitor
- Check tire sealant expiration date, if equipped
- Check spare tire, if equipped

Brakes

- Check brake system

Visible and Functional Inspections

- Seat belt components
- Accelerator pedal
- Passenger compartment air filter, if equipped
- Hoses
- Shocks and struts
- Steering components
- Axle boots or driveshaft and u-joints
- Compartment lift struts, if equipped

- Floor mats secured, no interference with pedals
- Horn
- Starter switch

Lubricate

- Chassis components

Owner Checks and Services

- At least twice a year, have underbody flushing service performed. See "Underbody Maintenance" in *Exterior Care* ⇨ *330*.

Recommended Fluids, Lubricants, and Parts

Recommended Fluids and Lubricants

Fluids and lubricants identified below by name or specification, including fluids or lubricants not listed here, can be obtained from your dealer.

Usage	Fluid/Lubricant
Electric Drive Unit	DEXRON ULV Automatic Transmission Fluid.
Hydraulic Brake System	GM approved DOT 4 Hydraulic Brake Fluid.
Key Lock Cylinders, Hood and Liftgate Hinges	Multi-Purpose Lubricant, Superlube. See your dealer.
Vehicle Coolant Circuits	Use only ACDelco Premix (50/50 mixture of de-ionized water and DEX-COOL Coolant). See your dealer.
Windshield Washer	Automotive windshield washer fluid that meets regional freeze protection requirements.

Maintenance Records

After scheduled services are performed, record the date, odometer reading, who performed the service, and the type of services performed in the boxes provided. Retain all maintenance receipts.

Date	Odometer Reading	Serviced By	Maintenance Stamp	Services Performed

Technical Data

Vehicle Identification
Vehicle Identification Number (VIN) 345
Service Parts Identification 345
Vehicle Data
Capacities and Specifications 345

Vehicle Identification

Vehicle Identification Number (VIN)



This legal identifier is in the front corner of the instrument panel, on the driver side of the vehicle. It can be seen through the windshield from outside. The Vehicle Identification Number (VIN) also appears on the Vehicle Certification label and certificates of title and registration.

Service Parts Identification

The certification label provides vehicle service information to the service technician.

There may be a large barcode on the certification label on the door frame that the service technician can scan for the following information:

- Vehicle Identification Number (VIN)
- Model designation
- Paint information
- Production options

If there is not a large barcode on this label, the same information can be found on a label in the rear storage area.

Vehicle Data

Capacities and Specifications

The following approximate capacities are given in metric and English conversions.

Refer to *Recommended Fluids and Lubricants* ⇨ *343* for more information.

Application	Capacities	
	Metric	English
Air Conditioning Refrigerant	For the air conditioning system refrigerant charge type and amount, see the refrigerant label under the hood. See your dealer for more information.	
Total Cooling System*	See your dealer.	
Wheel Nut Torque	190 N•m	140 lb ft
*The refilling or adding coolant procedures can be complex. See your dealer.		

Customer Information

Customer Information
Customer Satisfaction Procedure 347
California Warranty Information 349
Customer Assistance Offices 351
Customer Assistance for Text Telephone (TTY) Users 351
Online Account and Customer Support 351
GM Mobility Reimbursement Program (U.S. Only) 352
Roadside Assistance Program 352
Scheduling Service Appointments 354
Courtesy Transportation Program 354
If a Crash Occurs 355
Collision Damage Repair 355
Publication Ordering Information 356
Radio Frequency Statement 357

Reporting Safety Defects
Reporting Safety Defects to the United States Government 357
Reporting Safety Defects to the Canadian Government 358
Reporting Safety Defects to General Motors 358

Vehicle Data Recording and Privacy
Vehicle Data Recording and Privacy 358
Cybersecurity 358
Event Data Recorders 359
OnStar 359
Infotainment System 359

Customer Satisfaction Procedure

Your satisfaction and goodwill are important to your dealer and to Cadillac. Normally, any concerns with the sales transaction or the operation of the vehicle will be resolved by your dealer's sales or service departments. Sometimes, however, despite the best intentions of all concerned, misunderstandings can occur. If your concern has not been resolved to your satisfaction, the following steps should be taken:

STEP ONE: Discuss your concern with a member of dealership management. Normally, concerns can be quickly resolved at that level. If the matter has already been reviewed with the sales, service or parts manager, contact the owner of your dealership or the general manager

STEP TWO: If after contacting a member of dealership management, it appears your concern cannot be resolved by your dealership without further help, in the U.S., call the Cadillac Customer Assistance Center at 1-800–333–4223. In Canada, call the Canadian Cadillac Customer Care Centre at 1-888-446-2000.

We encourage you to call the toll-free number in order to give your inquiry prompt attention. Have the following information available to give the Customer Assistance representative:

- Vehicle Identification Number (VIN). This is available from the vehicle registration or title, or the plate at the top left of the instrument panel and visible through the windshield.
- Dealership name and location.
- Vehicle delivery date and present mileage.

When contacting Cadillac, remember that your concern will likely be resolved at a dealer's facility. That is why we suggest following Step One first.

STEP THREE — U.S. Owners: Both GM and your GM dealer are committed to making sure you are completely satisfied with your new vehicle. However, if you continue to remain unsatisfied after following the procedure outlined in Steps One and Two, you can file with the Better Business Bureau (BBB) AUTO LINE Program to enforce any additional rights you may have.

The BBB AUTO LINE Program is an out-of-court program administered by BBB National Programs, Inc. to settle automotive disputes regarding vehicle repairs or the interpretation of the New Vehicle Limited Warranty. Although you may be required to resort to this informal dispute resolution program prior to filing a court action, use of the program is free of charge and your case will generally be heard within 40 days. If you do not agree with the decision given in your case, you may reject it and proceed with any other venue for relief available to you. When contacting the BBB AUTO LINE, you will need to provide the following information: Owner's name and address, Vehicle identification number (VIN), the Year, Make, Model, mileage of the vehicle and provide a description of the concern.

Contact the BBB AUTO LINE Program using the toll-free telephone number or write them at the following address:

BBB AUTO LINE Program
BBB National Programs, Inc.
1676 International Drive
Suite 550
McLean, VA 22102

Telephone: 1-800-955-5100
www.bbbautoline.org

This program is available in all 50 states and the District of Columbia. Eligibility is limited by vehicle age, mileage, and other factors. General Motors reserves the right to change eligibility limitations and/or discontinue its participation in this program.

STEP THREE — Canadian Owners: In the event that you do not feel your concerns have been addressed after following the procedure outlined in Steps One and Two, General Motors of Canada Company wants you to be aware of its participation in a no-charge mediation/arbitration program. General Motors of Canada Company has committed to binding arbitration of owner disputes involving factory-related vehicle service claims. The program provides for the review of the facts involved by an impartial third party arbiter, and may include an informal hearing before the arbiter. The program is designed so that the entire dispute settlement process, from the time you file your complaint to the final decision, should be completed in about 70 days. We believe our impartial program offers advantages over courts in most jurisdictions because it is informal, quick, and free of charge.

For further information concerning eligibility in the Canadian Motor Vehicle Arbitration Plan (CAMVAP), call toll-free 1-800-207-0685, or call the Cadillac Customer Care Centre, 1-888-446-2000, or write to:

General Motors Cadillac Customer Care Centre

General Motors of Canada Company
500 Wentworth Street W
Oshawa, ON L1J 0C5

Your inquiry should be accompanied by the Vehicle Identification Number (VIN).

California Warranty Information

The Song-Beverly Consumer Warranty Act provides consumers who purchase or lease a new motor vehicle in California with certain rights if their vehicle has nonconformities that GM or its authorized repair facilities (e.g., GM dealers) are unable to repair after a reasonable number of attempts.

Applied to your vehicle, California Civil Code Section 1793.2(d) requires that, if GM or its authorized repair facilities are unable to repair a new motor vehicle to conform to the vehicle's applicable express warranties after a reasonable number of attempts, GM shall either replace the new motor vehicle or provide restitution in accordance with a statutory formula.

California Civil Code Section 1793.22(b) creates a presumption that GM has had a reasonable number of attempts to conform the vehicle to its applicable express warranties if, within 18 months from delivery to the buyer or 18,000 miles on the vehicle's odometer, whichever occurs first, one or more of the following occurs:

- The same nonconformity results in a condition that is likely to cause death or serious bodily injury if the vehicle is driven AND the nonconformity has been subject to repair two or more times by GM or its authorized repair facilities (e.g., dealers) AND the buyer or lessee has at least once directly notified GM of the need for the repair of the nonconformity by mailing such notification to the address listed below.
- The same nonconformity has been subject to repair four or more times by GM or its authorized repair facilities AND the buyer has at least once directly notified GM of the need for the repair of the nonconformity by mailing such notification to the address listed below.
- The vehicle is out of service by reason of repair nonconformities by GM or its authorized repair facilities for a cumulative total of more than 30 calendar days after delivery of the vehicle to the buyer.

If you purchased or leased a new motor vehicle in California and GM or its authorized repair facilities have been unable to repair the vehicle to conform it to applicable express warranties within a reasonable number of attempts, you may be eligible for relief under the Song-Beverly Consumer Warranty Act. You can submit a claim with the BBB AUTO LINE Program (see *Customer Satisfaction Procedure* ⇨ *347*) or you can request in writing that GM replace or repurchase your vehicle.

Notice to General Motors regarding warranty issues must be sent either by email to californiawarrantynotice@gm.com or by certified or registered mail, return receipt requested, to the following address:

California Repurchase Notice
P.O. Box 33173
Detroit, MI 48232-5173

Any repurchase request must include your name, the accurate Vehicle Identification Number ("VIN") of your vehicle, a brief summary of the repair history and problems with the vehicle.

Información de garantía de California

La Ley de Garantía del Consumidor Song-Beverly brinda a los consumidores que compran o alquilan un vehículo automotor nuevo en California ciertos derechos si su vehículo presenta inconformidades que GM o sus talleres de reparación autorizadas (por ejemplo, los distribuidores de GM) no pueden reparar después de una cantidad razonable de intentos.

Aplicado a su vehículo, la Sección 1793.2(d) del Código Civil de California requiere que, si GM o sus talleres de reparación autorizadas no pueden reparar un vehículo automotor nuevo para cumplir con las garantías expresas aplicables del vehículo después de una cantidad razonable de intentos, GM deberá reemplazar el vehículo automotor nuevo o proporcionar una restitución de acuerdo con una fórmula legal.

La Sección 1793.22(b) del Código Civil de California crea una presunción de que GM ha realizado un número razonable de intentos para adaptar el vehículo a sus garantías expresas aplicables si, dentro de los 18 meses desde la entrega al comprador o 18,000 millas en el odómetro del vehículo, lo que ocurra primero, ocurre uno o más de los siguientes:

- La misma inconformidad da como resultado una condición que probablemente cause la muerte o lesiones corporales graves si se conduce el vehículo Y la inconformidad ha sido objeto de reparación dos o más veces por GM o sus talleres de reparación autorizadas (por ejemplo, distribuidores) Y el comprador o arrendatario ha notificado directamente por lo menos una vez a GM sobre la necesidad de reparar la inconformidad enviando dicha notificación por correo a la dirección que se indica a continuación.
- La misma inconformidad ha sido objeto de reparación cuatro o más veces por GM o sus talleres de reparación autorizadas Y el comprador ha notificado directamente por lo menos una vez a GM sobre la necesidad de la reparación de la inconformidad enviando dicha notificación a la dirección que se indica a continuación.
- El vehículo está fuera de servicio debido a inconformidades de reparación por parte de GM o sus talleres de reparación autorizadas por un total acumulado de más de 30 días calendario después de la entrega del vehículo al comprador.

Si compró o alquiló un vehículo automotor nuevo en California y GM o sus talleres de reparación autorizados no han podido reparar el vehículo para cumplir con las garantías expresas aplicables dentro de una cantidad razonable de intentos, puede ser elegible para recibir ayuda bajo la Ley de Garantía del Consumidor Song-Beverly. Puede presentar un reclamo ante el Programa BBB AUTO LINE (consulte el Procedimiento de satisfacción del cliente) o puede solicitar por escrito que GM reemplace o recompre su vehículo.

El aviso a General Motors sobre problemas de garantía debe enviarse por correo electrónico a californiawarrantynotice@gm.com o por correo certificado o registrado, con acuse de recibo solicitado, a la siguiente dirección:

Aviso de recompra de California
P.O. Box 33173
Detroit, MI 48232-5173

La solicitud para reemplazo o recompra debe incluir su nombre, el Número de identificación del vehículo ("NIV") preciso de su vehículo, un breve resumen del historial de reparación y problemas con el vehículo.

Customer Assistance Offices

Cadillac is committed to assisting customers. Visit us online at www.cadillac.com/support (U.S.) or www.cadillaccanada.ca/en/owners (Canada) to chat with us or find answers to commonly asked questions, tips, vehicle how-to instructions, and available support services.

Need more help? Use the telephone numbers or mailing addresses below for additional assistance.

United States and Puerto Rico

Cadillac Customer Assistance Center
Cadillac Motor Car Division
P.O. Box 33169
Detroit, MI 48232-5169

1-800-333-4223

TTY: Dial 711 relay service and contact 1-800-833-2438

Roadside Assistance: 1-800-224-1400

Canada

Cadillac Customer Care Centre
General Motors of Canada Company
500 Wentworth Street W
Oshawa, ON L1J 0C5

1-888-446-2000 (English/French)

Cadillac Roadside Assistance: 1-800-882-1112

Overseas

Contact the local General Motors Business Unit.

Customer Assistance for Text Telephone (TTY) Users

To assist customers who are deaf, hard of hearing, or speech-impaired and/or who use Text Telephones (TTYs), please dial the national 711 relay service and contact 1-800-833-2438. TTY users in Canada can dial 1-800-263-3830.

Online Account and Customer Support

Create a Cadillac Account (U.S.) at cadillac.com

Learn more about your vehicle features, shop for and manage your connected services and OnStar plans, and access diagnostic information specific to your vehicle. Visit cadillac.com and create an account today.

Membership Benefits

: Download owner's manuals and view vehicle-specific how-to videos.

: View maintenance schedules, alerts, and Vehicle Diagnostic Information. Schedule service appointments.

: View service records from your dealership and add your own.

: Select a dealer and view locations, maps, phone numbers, and hours.

: Track your vehicle warranty information.

: View active recalls or search by Vehicle Identification Number. See *Vehicle Identification Number (VIN)* ⇨ *345*.

: Manage your profile and payment information. View your GM Rewards Card earnings and My Cadillac Rewards points.

: Chat with online help representatives.

Cadillac Account (Canada)

Visit your Cadillac Account at cadillaccanada.ca/en (English) or cadillaccanada.ca/fr (French) to access similar benefits.

GM Mobility Reimbursement Program (U.S. Only)



This program is available to qualified applicants for cost reimbursement, up to certain limits, of eligible aftermarket adaptive equipment required for the vehicle, such as hand controls or a wheelchair/scooter lift for the vehicle.

To learn about the GM Mobility program, call the GM Mobility Assistance Center at 1-800-323-9935. Text Telephone (TTY) users, please dial the national 711 relay service and contact 1-800-323-9935.

Roadside Assistance Program

From the U.S., call 1-844-515-1420. Text Telephone (TTY) Users (U.S. Only): Contact 711 relay service and provide 1-844-515-1420.

From Canada: 1-844-637-1757.

Service is available 24 hours a day, 365 days a year.

Calling for Assistance

When calling Roadside Assistance, have the following information ready:

- Your name, home address, and home telephone number
- Your mobile telephone number or the telephone number of your current location
- Location of the vehicle
- Model, year, color, and license plate number of the vehicle
- Odometer reading and Vehicle Identification Number (VIN)
- Description of the problem

Coverage

For Roadside coverage duration see the Limited Warranty and Owner Assistance Information Manual. For questions on additional Roadside coverage, contact Cadillac Roadside Assistance.

In the U.S. and Canada, Roadside coverage applies only when the person operating the vehicle has the owner's permission to drive it.

Roadside Assistance is not a part of the New Vehicle Limited Warranty. General Motors North America and Cadillac can make any changes or discontinue the Roadside Assistance program at any time without notification.

General Motors North America and Cadillac may choose to limit services or payment to an owner or driver if they decide the driver is making claims too often, or the same type of claim is made too frequently.

Cadillac Owner Privileges™

- **Lock-Out Service:** Service to unlock the vehicle if you cannot open the doors. For security reasons, the driver must present identification to receive service. A remote unlock may be available if you have OnStar.
- **Emergency Tow from a Public Road or Highway:** Tow to the nearest certified Cadillac EV dealer for warranty service, or if a vehicle cannot drive due to a crash. If the vehicle is out of charge, Roadside will tow the vehicle to the nearest charging station or to the customer's home, whichever is closest.

- **Flat Tire Change:** If the tire has been separated from the wheel, has damaged sidewalls, or has a large puncture, the tire is too severely damaged for the self-sealing tire to be effective and the vehicle will have to be towed. If the warranty does not cover the tire, it is the owner's responsibility to repair or replace it.
- **Battery Jump Start:** Service to jump start a dead battery.
- **Trip Interruption Benefits and Service:** If you cannot continue your trip due to a warranty event, Roadside Assistance may reimburse incidental expenses. This includes hotels, meals, and rental car or a vehicle being delivered back to the customer, up to 500 miles. Contact Cadillac Roadside Assistance for Trip Interruption eligibility at the time of vehicle disablement.

Cadillac Technician Roadside Assistance (U.S. Only)

Cadillac's Roadside Assistance provides U.S. Cadillac owners with the advantage of contacting a Cadillac advisor and, where available, a Cadillac trained dealer technician who can provide on-site service. Where available, a dealer technician will travel to your location. If unavailable, we will arrange to have your car towed to the nearest Cadillac Dealership. Each technician travels with a specially equipped service vehicle complete with the necessary Cadillac parts and tools required to handle most roadside repairs.

Services Not Included in Roadside Assistance

- Impound towing caused by violation of any laws
- Reimbursement of legal fines
- Reimbursement of police mandated tows
- Mounting, dismounting, or changing of snow tires, chains, or other traction devices
- Towing of anything attached to the vehicle like boats, campers, trailers, cargo boxes, etc.
- Vehicles stranded due to off-road driving
- Vehicles stuck in the sand, mud, or snow
- Ferry towing (Customers are responsible for the coordination and payment of any ferry involvement prior to Roadside dispatching)
- Airfare reimbursement

Roadside Assistance does not provide service if a vehicle is in an area that is not accessible to the service vehicle or is not a regularly traveled or maintained public road, which includes ice and winter roads. Customers do not receive vehicle service on restricted roadways. This includes, but are not partial to, some highways, tunnels, toll roads, toll bridges, turnpikes, and service roads.

Services Specific to Canadian-Purchased Vehicles

- **Lock-Out Service:** Vehicle registration is required.
- **Trip Interruption Benefits and Service:** Must be traveling 150 km from the start of the trip to qualify. Benefits and assistance require pre-authorization, original detailed receipts, and a copy of the repair orders. When the Roadside Assistance advisor receives permission, they will help to explain and plan how to receive payment. Examples of benefits and assistance include hotel, meals, rental car, and delivering the vehicle back to the customer, up to 800 km.

- **Alternative Service:** The Roadside Assistance advisor may allow local emergency road service if the customer cannot receive immediate service. You will receive payment, up to $100, after sending the original receipt to Roadside Assistance. The vehicle owner is responsible for any costs for parts and labor of repairs the warranty does not cover. Coverage may also apply to mechanical failures.

Scheduling Service Appointments

If your vehicle requires service, contact your dealer and request an appointment. By scheduling a service appointment and advising the service consultant of your transportation needs, your dealer can help minimize your inconvenience. Be sure to notify your dealer of any safety-related concerns when requesting the appointment.

If you cannot schedule service immediately, keep driving the vehicle until your scheduled appointment, unless the problem is safety related.

If you are seeking a same-day repair, schedule your appointment as early in the day as possible.

Courtesy Transportation Program

GM and our participating dealers are proud to offer Courtesy Transportation. This customer support program minimizes inconvenience during warranty repairs for vehicles with the Bumper-to-Bumper (Base Warranty Coverage period in Canada), Federal Emission, Extended Powertrain, or Electric-specific warranties in both the U.S. and Canada.

Courtesy Transportation is not a part of the New Vehicle Limited Warranty. See the "Limited Warranty and Owner Assistance Information" manual for detailed new vehicle warranty coverage information.

Transportation Options

Warranty service is often completed while you wait. If not, your dealer may offer these transportation options:

Shuttle Service

One-way or round-trip shuttle service within a reasonable time and distance from your dealer.

Public Transportation, Ridesharing App, or Fuel Reimbursement

If your vehicle is kept overnight for repairs and you use public transportation or a ridesharing app, original receipts must support the expense within GM's allowed maximum to qualify for reimbursement. If U.S. customers arrange their own transportation, limited reimbursement for reasonable fuel expenses may be available. Claims should reflect actual costs and must be supported by original receipts. See your dealer for information.

Courtesy Rental Vehicle

For an overnight warranty repair, the dealer may offer a courtesy rental vehicle or reimburse rental costs. Reimbursement requires original receipts, a signed and complete rental agreement, and must meet state/provincial, local and rental vehicle provider requirements, which may include, minimum age requirements, insurance coverage, and credit card. Additional fees for fuel, rental vehicle insurance, taxes, levies, usage fees, excessive mileage, or rental usage beyond the completion of the repair are your responsibility.

A like vehicle may not be available as a courtesy rental.

Additional Program Information

Not all program options, like shuttle service, are available at every dealer. Contact your dealer for availability.

General Motors reserves the right to unilaterally modify, change, or discontinue Courtesy Transportation at any time and to resolve all questions of claim eligibility pursuant to the terms and conditions described herein at its sole discretion.

If a Crash Occurs

If there has been an injury, call emergency services for help. Do not leave the scene of a crash until all parties address the matter. Move the vehicle only if its position puts you in danger, or a police officer tells you to move it.

Give only the necessary information to police and other parties involved in the crash.

For emergency towing see *Roadside Assistance Program* ⇨ *352*.

Gather the following information:

- Driver name, address, and telephone number
- Driver license number
- Owner name, address, and telephone number
- Vehicle license plate number
- Vehicle make, model, and model year
- Vehicle Identification Number (VIN)
- Insurance company and policy number
- General description of the damage to the other vehicle

Choose a reputable repair facility that uses quality replacement parts. See "Collision Parts" in *Collision Damage Repair* ⇨ *355*.

In a crash, the sensing system may shut down the high voltage system. See *Battery - North America* ⇨ *290* for important safety information. If an airbag has inflated, see *What Will You See After an Airbag Inflates?* ⇨ *57*.

If the vehicle has damage from a crash, flood, fire, or other event it may be necessary to have the vehicle inspected. See *Battery - North America* ⇨ *290* for important safety information.

Collision Damage Repair

If the vehicle is damaged in a collision, have it repaired by a qualified technician using the proper equipment and Genuine GM Collision replacement parts. Poorly performed collision repairs diminish the vehicle resale value and safety performance.

If the vehicle is damaged from a crash, flood, fire, or other event, it may be necessary to have the vehicle inspected. See *Battery - North America* ⇨ *290* for important safety information.

Managing the Vehicle Damage Repair Process

Repair Facility

Taking an active role in the vehicle repair process is important. Choose a collision repair facility that meets your needs before you ever need collision repairs. Your dealer may have a collision repair center with GM-trained technicians and state-of-the-art equipment or be able to recommend a collision repair center that has GM-trained technicians and comparable equipment.

If you have a preferred repair facility, take the vehicle there, or have it towed there. Specify to the facility that any required replacement collision parts be original equipment parts. Remember, only Genuine GM parts are covered by the GM vehicle warranty. See “Collision Parts” later in this section.

Collision Parts

Genuine GM Collision parts are new parts made with the same materials and construction methods as factory installed parts. Genuine GM Collision parts ensure that the vehicle's designed appearance, durability, and safety features are preserved. The use of Genuine GM parts can help maintain the GM New Vehicle Limited Warranty.

Recycled original equipment parts may be an acceptable choice to maintain the vehicle's appearance and safety performance; however, the history of these parts may not be known. Such parts are not covered by the GM New Vehicle Limited Warranty, and any related failures are not covered by that warranty.

Aftermarket collision parts made by companies other than GM may fit poorly, exhibit premature durability/corrosion problems, and may not perform properly in subsequent collisions. Aftermarket parts are not covered by the GM New Vehicle Limited Warranty, and any vehicle failure related to such parts is not covered by that warranty.

Insuring the Vehicle

Protect your GM vehicle with comprehensive and collision insurance coverage. There are significant differences in the quality of coverage afforded by various insurance policy terms. If the vehicle is repaired with any parts that are not GM original equipment collision parts, they will not be covered or under warranty. If such insurance coverage is not available from your current insurance carrier, consider switching to another insurance carrier.

If you are leasing your vehicle, the leasing company may require you to have insurance that ensures repairs with Genuine GM Original Equipment Manufacturer parts or Genuine Manufacturer replacement parts. Read the lease carefully, as you may be charged at the end of the lease for poor quality repairs.

Depending on your policy limits, your insurance company may initially value the repair using aftermarket parts. Discuss this with the repair professional and insist on Genuine GM parts. Remember, if the vehicle is leased, you may be obligated to have the vehicle repaired with Genuine GM parts, even if your insurance coverage does not pay the full cost.

If another party's insurance company is paying for the repairs, you are not obligated to accept a repair valuation based on that insurance company's collision policy repair limits, as you have no contractual limits with that company. In such cases, you can have control of the repair and parts choices if the cost stays within reasonable limits.

Publication Ordering Information

Service Manuals

Service manuals have the diagnosis and repair information on the engine/propulsion, transmission, axle, suspension, brakes, electrical system, steering system, body, etc.

Customer Literature

Owner’s manuals are written specifically for owners and are intended to provide basic operational information about the vehicle. The owner’s manual includes the Maintenance Schedule for all models.

Customer literature publications available for purchase include owner's manuals, warranty manuals, and portfolios. Portfolios include an owner's manual, warranty manual, if applicable, and zip lock bag or pouch.

Current and Past Models

Service manuals and customer literature are available for many GM vehicles.

To check availability and to order, call 1-800-551-4123 Monday–Friday, 8:00 a.m.–6:00 p.m. Eastern Time

For credit card orders only (VISA, MasterCard, or Discover), see Helm, Inc. at: www.helminc.com.

To order by mail, write to:

Helm Incorporated
Attention: Customer Service
47911 Halyard Drive, Suite 200
Plymouth, MI 48170

Make checks payable in U.S. funds.

Radio Frequency Statement

This vehicle uses license-exempt transmitters / receivers / systems that operate on a radio frequency that complies with Part 15/Part 18 of the Federal Communications Commission (FCC) rules and with Innovation, Science and Economic Development (ISED) Canada's license-exempt RSS(s) / RSP-100 / ICES-GEN.

Operation is subject to the following two conditions:

1. The device may not cause harmful interference.
2. The device must accept any interference received, including interference that may cause undesired operation of the device.

Changes or modifications to any of these systems by other than an authorized service facility could void authorization to use this equipment.

Reporting Safety Defects

Reporting Safety Defects to the United States Government

If you believe that your vehicle has a defect which could cause a crash or could cause injury or death, you should immediately inform the National Highway Traffic Safety Administration (NHTSA) in addition to notifying General Motors.

If NHTSA receives similar complaints, it may open an investigation, and if it finds that a safety defect exists in a group of vehicles, it may order a recall and remedy campaign. However, NHTSA cannot become involved in individual problems between you, your dealer, or General Motors.

To contact NHTSA, you may call the Vehicle Safety Hotline toll-free at 1-888-327-4236 (TTY: 888-275-9171); go to *https://www.safercar.gov;* or write to:

Administrator, NHTSA
1200 New Jersey Avenue, S.E.,
Washington, D.C. , 20590

You can also obtain other information about motor vehicle safety from *https://www.safercar.gov*.

Reporting Safety Defects to the Canadian Government

If you live in Canada, and you believe that the vehicle has a safety defect, notify Transport Canada immediately, and notify General Motors of Canada Company. Call Transport Canada at 1-800-333-0510; go to:

www.tc.gc.ca/recalls (English)

www.tc.gc.ca/rappels (French)

or write to:

Transport Canada
Motor Vehicle Safety Directorate
Defect Investigations and Recalls Division
80 Noel Street
Gatineau , QC J8Z 0A1

Reporting Safety Defects to General Motors

In addition to notifying National Highway Traffic Safety Administration (NHTSA) (or Transport Canada) in a situation like this, notify General Motors.

In the U.S., call 1-800-458-8006, or write:

Cadillac Customer Assistance Center
Cadillac Motor Car Division
P.O. Box 33169
Detroit, MI 48232-5169

In Canada, call 1-888-446-2000, or write:

Canadian Cadillac Customer Care Centre
General Motors of Canada Company
500 Wentworth Street W
Oshawa, ON L1J 0C5

In Mexico, call 800-466-0805 or 800-212-2345.

In other Central America and Caribbean Countries, call 52-555-901-2369.

Vehicle Data Recording and Privacy

The vehicle has a number of computers that record information about the vehicle's performance and how it is driven or used. For example, the vehicle uses computer modules to monitor and control electric drive unit performance, to monitor the conditions for airbag deployment and to deploy them in a crash, and, if equipped, to provide antilock braking to help the driver control the vehicle. These modules may store data to help the dealer technician service the vehicle or to help GM improve safety or features. Some modules may also store data about how the vehicle is operated, such as rate of energy consumption or average speed. These modules may retain personal preferences, such as radio presets, seat positions, and temperature settings.

Cybersecurity

GM collects information about the use of your vehicle including operational and safety related information. We collect this information to provide, evaluate, improve, and troubleshoot our products and services and to develop new products and services. The protection of vehicle electronics systems and customer data from unauthorized outside electronic access or control is important to GM. GM maintains appropriate security standards, practices, guidelines, and controls aimed at defending the vehicle and the vehicle service ecosystem against unauthorized electronic access, detecting possible malicious activity in related networks, and responding to suspected cybersecurity incidents in a timely, coordinated and effective manner. Security incidents could impact your safety or compromise your private data. To minimize security risks, please do not connect your vehicle electronic systems to unauthorized

devices or connect your vehicle to any unknown or untrusted networks (such as Bluetooth, Wi-Fi, or similar technology). In the event you suspect any security incident impacting your data or the safe operation of your vehicle, please stop operating your vehicle and contact your dealer.

Event Data Recorders

This vehicle is equipped with an Event Data Recorder (EDR). The main purpose of an EDR is to record, in certain crash or near crash-like situations, such as an air bag deployment or hitting a road obstacle, data that will assist in understanding how a vehicle's systems performed. The EDR is designed to record data related to vehicle dynamics and safety systems for a short period of time, typically 30 seconds or less. The EDR in this vehicle is designed to record such data as:

- How various systems in your vehicle were operating;
- Whether or not the driver and passenger safety belts were buckled/fastened;
- How far (if at all) the driver was depressing the accelerator and/or brake pedal; and,
- How fast the vehicle was traveling.

These data can help provide a better understanding of the circumstances in which crashes and injuries occur.

Note
EDR data are recorded by your vehicle only if a non-trivial crash situation occurs; no data are recorded by the EDR under normal driving conditions and no personal data (e.g., name, gender, age, and crash location) are recorded. However, other parties, such as law enforcement, could combine the EDR data with the type of personally identifying data routinely acquired during a crash investigation.

To read data recorded by an EDR, special equipment is required, and access to the vehicle or the EDR is needed. In addition to the vehicle manufacturer, other parties, such as law enforcement, that have the special equipment, can read the information if they have access to the vehicle or the EDR.

GM will not access these data or share it with others except: with the consent of the vehicle owner or, if the vehicle is leased, with the consent of the lessee; in response to an official request by police or similar government office; as part of GM's defense of litigation through the discovery process; or, as permitted by law.

Data that GM collects or receives may also be used for GM research needs or may be made available to others for research purposes, where a need is shown and the data is not tied to a specific vehicle or vehicle owner.

OnStar

If the vehicle is equipped with OnStar and has an active service plan, additional data may be collected and transmitted through the OnStar system. This includes information about the vehicle's operation; collisions involving the vehicle; the use of the vehicle and its features, including infotainment; and the location and approximate GPS speed of the vehicle. Refer to the OnStar Terms and Conditions and Privacy Statement on the OnStar website.

See *OnStar Additional Information* ⇨ *361*.

Infotainment System

If the vehicle is equipped with a navigation system as part of the infotainment system, use of the system may result in the storage of destinations, addresses, telephone numbers, and other trip information. See the infotainment section for information on stored data and for deletion instructions.

OnStar

OnStar Overview
OnStar Overview 360
OnStar Services
Emergency 361
Security 361
OnStar Additional Information
OnStar Additional Information 361

OnStar Overview

This vehicle may be equipped with a comprehensive, in-vehicle system that can connect to an OnStar Advisor for Emergency, Security, Navigation, Connection, and Diagnostic Services. OnStar services may require a paid service plan and data plan. OnStar requires the vehicle battery and electrical system, cellular service, and GPS satellite signals to be available and operating. OnStar acts as a link to existing emergency service providers.

OnStar may collect information about you and your vehicle, including location information. See OnStar User Terms, Privacy Statement, and Software Terms for more details including system limitations at www.onstar.com (U.S.) or www.onstar.ca (Canada).



White OnStar Button

Blue OnStar Button

Red Emergency Button

The OnStar system status light is next to the OnStar buttons. When the status light is:

- Solid Green: the system is ready.
- Flashing Green: the system is on a call.
- Red: a problem has been detected.
- Off: the system is off. Press twice to speak with an OnStar Advisor.

Press or call 1-888-4ONSTAR (1-888-466-7827) to speak to an OnStar Advisor.

Press to end ongoing calls with an OnStar Advisor.

Press to connect to the OnStar Virtual Assistant to:

- Verify account information or update contact information.
- Request driving directions.
- Request a Diagnostic check of essential operating systems.
- Request Roadside Assistance.
- Manage Wi-Fi Settings, if equipped.

Press SOS to get a priority connection to an OnStar Advisor available 24/7 to:

- Request help for an emergency, severe weather, or other crisis situations, and find evacuation routes.
- Be a Good Samaritan or respond to an AMBER Alert.

OnStar Services

Emergency

Emergency Services require an active safety and security plan. With Automatic Crash Response, built-in sensors can automatically connect an OnStar Advisor into the vehicle to help.

Press SOS for a priority connection to an OnStar Advisor who can contact emergency service providers, direct them to your exact location, and relay vital information.

With OnStar Crisis Assist, specially trained OnStar Advisors are available 24 hours a day, 7 days a week, to provide a central point of contact, assistance, and information during a crisis.

With Roadside Assistance, OnStar Advisors can locate a nearby service provider to help with a flat tire or a battery jump.

Security

If equipped, OnStar provides these services:

- Stolen Vehicle Assistance: OnStar Advisors can use GPS to locate the vehicle and help authorities quickly recover it.
- Remote Ignition Block: OnStar can block the vehicle from restarting.
- Stolen Vehicle Slowdown: OnStar can work with law enforcement to gradually slow the vehicle down.

Theft Alarm Notification

When the vehicle alarm system is armed and the alarm is activated, an alert by text, email, or app push notification is sent. If the vehicle is stolen, an OnStar Advisor can work with authorities to recover the vehicle.

OnStar Additional Information

In-Vehicle Audio Messages

Audio messages may play important information at the following times:

- Prior to vehicle purchase. Press On to set up an account.
- After change in ownership.
- Periodically to verify vehicle connectivity status.

Transferring Service

Press On to request account transfer eligibility information. The OnStar Advisor can cancel or change account information.

Selling/Transferring the Vehicle

Call 1-888-4ONSTAR (1-888-466-7827) immediately to terminate your OnStar or connected services if the vehicle is disposed of, sold, transferred, or if the lease ends.

Reactivation for Subsequent Owners

Press and follow the prompts to speak to an OnStar Advisor as soon as possible. The OnStar Advisor will update vehicle records and explain OnStar or connected service options.

How OnStar Service Works

Automatic Crash Response, Emergency Services, Crisis Assist, Stolen Vehicle Assistance, Remote Services, and Roadside Assistance are available on most vehicles. Not all OnStar services are available everywhere or on all vehicles. For more information, a full description of OnStar services, system limitations, and OnStar User Terms, Privacy Statement, and Software Terms:

- Call 1-888-4ONSTAR (1-888-466-7827).
- See www.onstar.com (U.S.).
- See www.onstar.ca (Canada).
- Call TTY 1-877-248-2080.
- Press to speak with an OnStar Advisor.

OnStar or connected services cannot work unless the vehicle is in a place where OnStar has an agreement with a wireless service provider for service in that area. The wireless service provider must also have coverage, network capacity, reception, and technology compatible with OnStar or connected services. Service involving location information about the vehicle cannot work unless GPS signals are available, unobstructed, and compatible with the OnStar hardware. OnStar or connected services may not work if the OnStar equipment is not properly installed or it has not been properly maintained. If equipment or software is added, connected, or modified, OnStar or connected services may not work. Other problems beyond the control of OnStar — such as hills, tall buildings, tunnels, weather, electrical system design and architecture of the vehicle, damage to the vehicle in a crash, or wireless phone network congestion or jamming — may prevent service.

Services for People with Disabilities

OnStar Advisors provide services to help with physical disabilities and medical conditions.

Press to help:

- Find a hotel, restaurant, etc., that meets accessibility needs.
- Provide directions to the closest hospital or pharmacy in urgent situations.

TTY Users

OnStar has the ability to communicate to deaf, hard-of-hearing, or speech-impaired customers while in the vehicle. If equipped, the TTY system provides in-vehicle access to all OnStar services, except OnStar Turn-by-Turn Navigation.

Turn your vehicle on and keep it in P (Park). From the infotainment apps screen, access TTY by touching Settings > Apps > Phone > TTY > Enable OnStar TTY mode. When TTY mode is active, you can make and receive phone calls using the infotainment display.

OnStar Personal Identification Number (PIN)

A PIN is needed to access some OnStar services. The PIN will need to be changed the first time when speaking with an OnStar Advisor. To change the OnStar PIN, contact an OnStar Advisor by pressing or calling 1-888-4ONSTAR.

Warranty

OnStar equipment may be warranted as part of the vehicle warranty.

Languages

The vehicle can be programmed to respond in multiple languages. Press and ask for an OnStar Advisor. OnStar Advisors are available in English, Spanish, and French. Available languages may vary by country.

Potential Issues

OnStar cannot perform Remote Door Unlock or Stolen Vehicle Assistance after the vehicle has been off continuously for an extended period of time without being started. To find out the duration of time that applies for the vehicle, contact an OnStar Advisor by pressing or calling 1-888-4ONSTAR. If the vehicle has not been started for an extended period of time, OnStar can contact Roadside Assistance or a locksmith to help gain access to the vehicle.

Global Positioning System (GPS)

- Obstruction of the GPS can occur in a large city with tall buildings; in parking garages; around airports; in tunnels and underpasses; or in an area with very dense trees. If GPS signals are not available, the OnStar system should still operate to call OnStar. However, OnStar could have difficulty identifying the exact location.
- In emergency situations, OnStar can use the last stored GPS location to send to emergency responders.

A temporary loss of GPS can cause loss of the ability to send a Turn-by-Turn Navigation route. The OnStar Advisor may give a verbal route or may ask for a call back after the vehicle is driven into an area with greater access to GPS signal.

Cellular and GPS Antennas

Cellular reception is required for OnStar to send remote signals to the vehicle. Do not place items over or near the antenna to prevent blocking cellular and GPS signal reception.

Unable to Connect to OnStar Message

If there is limited cellular coverage or the cellular network has reached maximum capacity, this message may come on. Press to try the call again or try again after driving a few miles into another cellular area.

Vehicle and Power Issues

OnStar services require a vehicle electrical system, wireless service, and GPS satellite technologies to be available and operating for features to function properly. These systems may not operate if the battery is discharged or disconnected.

Add-on Electrical Equipment

The OnStar system is integrated into the electrical architecture of the vehicle. Do not add any electrical equipment. See *Add-On Electrical Equipment* ⇨ *279*. Added electrical equipment may interfere with the operation of the OnStar system and cause it to not operate.

Vehicle Software Updates

OnStar or GM may remotely deliver software updates or changes to the vehicle without further notice or consent. These updates or changes may enhance or maintain safety, security, or the operation of the vehicle or the vehicle systems. Software updates or changes may affect or erase data or settings that are stored in the vehicle, such as saved navigation destinations or pre-set radio stations. Neither OnStar nor GM is responsible for any affected or erased data or settings. These updates or changes may also collect personal information. Such collection is described in the OnStar Privacy Statement or separately disclosed at the time of installation. These updates

or changes may also cause a system to automatically communicate with GM servers to collect information about vehicle system status, identify whether updates or changes are available, or deliver updates or changes. An active OnStar agreement constitutes consent to these software updates or changes and agreement that either OnStar or GM may remotely deliver them to the vehicle.

Connected Services Privacy Statement

The complete OnStar Privacy Statement may be found at www.onstar.com (U.S.), or www.onstar.ca (Canada). We recommend that you review it. If you have any questions, call 1-888-4ONSTAR (1-888-466-7827) or press to speak with an OnStar Advisor. Users of wireless communications are cautioned that the privacy of any information sent via wireless cellular communications cannot be assured. Third parties may unlawfully intercept or access transmissions and private communications without consent.

OnStar – Software Acknowledgements

To obtain the source code under GPL, LGPL, MPL, and other open source licenses, that is contained in this product, please visit www.opensourceautomotive.com/an/GM. In addition to the source code, all referred license terms, warranty disclaimers, and copyright notices are available for download. This offer is valid for a period of three years after our last shipment of this product. This offer is valid to anyone in receipt of this information.

*Provided through Aumovio, Inc., who is solely responsible for provisions of related OSS compliance.

Connected Services

Connected Services
Navigation 365
Connections 365
Diagnostics 366

Vehicle Updates
How Your Vehicle is Updated 367
Vehicle Update Additional Information .. 367

Navigation

Connected navigation services enable you to use the vehicle's mobile app or an OnStar Advisor to get route guidance.

If equipped, you can send destinations from the myCadillac mobile app to the Turn-by-Turn or built-in navigation system.

An active OnStar or connected services plan is required. Services vary by model. Map coverage is available in the United States (www.onstar.com) and Canada (www.onstar.ca).

Turn-by-Turn Navigation

OnStar Turn-by-Turn Navigation provides voice-guided driving directions using GPS technology.

To get directions, push the Blue OnStar button and request Turn-by-Turn directions. The OnStar Virtual Assistant will send detailed directions to the Turn-by-Turn Navigation system.

Automated voice-guided directions will take you to your set destination.

If you are in an area where Turn-by-Turn is not available, push to speak to an OnStar Advisor. The OnStar Advisor will be able to give real-time navigation instructions.

Destination Download

If equipped, OnStar can send directions to the vehicle's built-in navigation system. Press , then ask the OnStar Virtual Assistant to download directions to the built-in navigation system.

After the navigation session is downloaded, the navigation screen will provide prompts to begin driving directions.

Downloaded routes can only be canceled through the built-in navigation system.

Connections

The following services allow you to monitor your vehicle status, manage your vehicle Wi-Fi services, and safeguard your personal data.

For coverage maps, see www.onstar.com (U.S.) or www.onstar.ca (Canada).

Wi-Fi Hotspot

If equipped, the built-in Wi-Fi hotspot provides 5G access to in-vehicle experiences such as navigation apps, voice assistance, audio and visual HD streaming apps in select vehicles. Multiple devices can be connected. A data plan is required.

Only use the in-vehicle controls when it is safe to do so. See *Distracted Driving* ⇨ *171*.

To retrieve Wi-Fi hotspot information, select the Wi-Fi Hotspot icon on the infotainment app screen.

The Wi-Fi settings will display:

- The Wi-Fi hotspot name (Service Set Identifier) and password.
- The connection type (no Internet connection, 4G, 4G LTE, 5G) and signal quality (poor, good, excellent), if equipped.

The connection type icon may not illuminate even though the vehicle has an active connection.

Connect with an OnStar Advisor to edit the Wi-Fi hotspot name or password. See *OnStar Overview* ⇨ *360*. On some vehicles, you can edit the Wi-Fi hotspot name and password in the Wi-Fi Hotspot menu.

After initial setup, the Wi-Fi hotspot will connect automatically to your mobile devices.

Manage data usage by turning Wi-Fi on or off on your mobile device, using the myCadillac mobile app, or by contacting an OnStar Advisor.

myCadillac App

To remotely connect to your vehicle, download the myCadillac mobile app to a compatible Apple or Android device. For specific app features, see my.cadillac.com.

To use the app, you will need:

- An active OnStar or connected services plan.
- A compatible mobile device.
- Factory-installed remote start and power door locks.

Data rates apply.

See www.cadillac.com or www.onstar.com for details and system limitations.

Security Best Practices

To protect your personal data:

- Change the default password for the myCadillac mobile app. Use a combination of letters and numbers to increase the security.
- Change the Wi-Fi hotspot name (Service Set Identifier) and password. The Service Set Identifier is your network's name that is visible to other wireless devices. Choose a unique name and avoid family names or vehicle descriptions.

Diagnostics

OnStar's Vehicle Diagnostics

If equipped and enabled, OnStar's Vehicle Diagnostics monitors and reports on the health of your vehicle's central operating systems. Capabilities vary by model. See www.onstar.com (U.S.) or www.onstar.ca (Canada) for details and system limitations.

myCadillac App

You can remotely check your vehicle status through the myCadillac app.

Features are subject to change. For updates on feature capabilities, see www.cadillac.com/owners. Message and data rates may apply.

Vehicle Updates

How Your Vehicle is Updated

If equipped, the vehicle can download and install select software updates over a wireless connection. The system will prompt for certain updates to be downloaded and/or installed.

To manually check for updates, select Settings > Updates. Follow the on-screen prompts to download and/or install the update. The steps to check for, download, and install updates may vary by vehicle.

During the software download, the vehicle can be used normally. Once the download is complete, the vehicle may prompt you to install when shifting into P (Park).

During the software installation, the vehicle will be disabled and cannot be driven. The system will show the installation progress and will notify you of success or failure once the installation is complete.

Your vehicle must be connected to the internet to download Over-the-Air vehicle software updates, which can be accessed through the vehicle's built-in internet connection. If required, data plans are provided by a third party. A secure Wi-Fi hotspot such as a compatible mobile, home, or public hotspot can be used. Applicable data rates may apply.

To connect the infotainment system to a secured hotspot, select Settings > Connections > Wi-Fi Networks. Select the appropriate Wi-Fi network and follow the on-screen prompts.

Download speeds may vary. On most compatible mobile devices, activation of the Wi-Fi hotspot is in the Settings menu under Mobile Network Sharing, Personal Hotspot, Mobile Hotspot, or similar. Availability of Over-the-Air software updates varies by vehicle and country. Features are subject to change.

For more information on this feature, see *Online Account and Customer Support* ⇨ *351*.

Vehicle Update Additional Information

If you have accepted the terms and conditions and have an active connected services package for your vehicle, GM may remotely deliver software updates or changes to the vehicle without further notice or consent. These updates or changes may enhance or maintain safety, security, or the operation of the vehicle or the vehicle systems. Software updates or changes may affect or erase data or settings that are stored in the vehicle, such as saved navigation destinations or pre-set radio stations. GM is not responsible for any affected or erased data or settings. These updates or changes may also collect personal information. Such collection is described in the privacy statement or separately disclosed at the time of installation. These updates or changes may also cause a system to automatically communicate with GM servers to collect information about vehicle system status, identify whether updates or changes are available, or deliver updates or changes. An active connectivity agreement constitutes consent to these software updates or changes and agreement that GM may remotely deliver them to the vehicle.

Data Download

If the vehicle is equipped with and has an active connected services plan, additional data may be collected through the connected services system. This includes information about: the vehicle's operation, a crash involving the vehicle, the use of the vehicle and its features, and, in certain situations, the location and approximate GPS speed of the

vehicle. Refer to the Terms and Conditions and Privacy Statement on the website. See www.cadillac.com.

Wireless Configuration

Export of this vehicle to another region may require reset of internal settings for wireless communication configuration to ensure regulatory compliance or enable connectivity. See your dealer. The end-user of the device does not have an option to modify the regulatory wireless configuration.

Index

A

Accessories and Modifications..... 282
AC Charging..... 262
Adaptive
  Cruise Control..... 107, 195
Additional
  OnStar Information..... 361
Add-On Electrical Equipment..... 279
Advanced
  Driver Assistance Systems..... 234
Agreements
  Trademarks and License..... 159
Aiming
  Headlight, Front..... 295
Air
  Filter, Passenger Compartment..... 167
  Vents..... 166
Airbags
  Adding Equipment to the Vehicle..... 62
  How Does an Airbag Restrain?..... 57
  Passenger Sensing System..... 58
  Passenger Status Indicator..... 98
  Readiness Light..... 98
  Replacing System Parts after a Crash..... 63
  Servicing Airbag-Equipped Vehicles..... 62
  System..... 53
  System Check..... 63
  What Makes an Airbag Inflate?..... 57
  What Will You See after an Airbag Inflates?..... 57
  When Should an Airbag Inflate?..... 56
  Where Are the Airbags?..... 54
Alarm
  Vehicle Security..... 23
Alert
  Blind Zone Steering Assist (BZSA)..... 255
  Lane Change (LCA)..... 253
  Rear Cross Traffic..... 243
  Rear Pedestrian..... 242
All-Season Tires..... 306
All-Wheel Drive..... 187
  Service Light..... 102
Ambient Lighting..... 128
AM-FM Radio..... 135
Antenna
  Multi-band..... 137
Antilock Brake System (ABS)..... 187
  Warning Light..... 101
Appearance Care
  Exterior..... 330
  Interior..... 334
Apple CarPlay and Android Auto..... 153
Assistance
  Program, Roadside..... 352
Assistance Systems
  Advanced..... 234
  Automatic Emergency Braking (AEB)..... 247

Automatic Parking Assist (APA)..... 239
Blind Zone Steering (BZSA)..... 255
Driver Attention..... 257
Driving..... 245
Forward Collision Alert (FCA) System.... 245
Front Pedestrian Braking (FPB)..... 251
Lane Change Alert (LCA)..... 253
Lane Keep Assist (LKA)..... 258
Parking..... 238
Parking and Backing..... 235
Rear Cross Traffic Alert (RCTA)..... 243
Rear Pedestrian Alert..... 242
Rear Vision Camera (RVC)..... 235
Reverse Automatic Braking (RAB)..... 241
Surround Vision Recorder..... 260
Surround Vision System..... 236
Traffic Sign..... 255
Audio
Bluetooth..... 138
Automatic
Door Locks..... 15
Emergency Braking (AEB) Disabled Light..... 103
Parking Assist (APA)..... 239
Vehicle Hold (AVH)..... 189
Avoiding Untrusted Media Devices..... 137

B

Battery
Charging Electrical Requirements..... 278
Exterior Lighting Battery Saver..... 130
Fault Light..... 100
Gauge..... 95
Jump Starting..... 325
Load Management..... 129
Power Protection..... 129
Battery - North America..... 290
Blade Replacement, Wiper..... 293
Bluetooth
Audio..... 138
Overview..... 144, 149
Brakes..... 288
Antilock..... 187
Brake Assist..... 189
Electric Brake Boost..... 187
Electric Parking Brake..... 187
Fluid..... 289
Regenerative Braking..... 190
System Warning Light..... 100
Braking..... 172
Automatic Emergency (AEB)..... 247
Front Pedestrian (FPB) System..... 251
Post-Collision..... 189
Reverse Automatic..... 241
Break-In, New Vehicle..... 181
Buckle To Drive..... 46
Buying New Tires..... 320

C

Calibration
Compass..... 88
California
Perchlorate Materials Requirements..... 282
Proposition 65 Warning..... 1
Warranty Information..... 349
Camera
Rear Vision (RVC)..... 235
Canadian Vehicle Owners..... 2
Capacities and Specifications..... 345
Carbon Monoxide
Liftgate..... 18
Winter Driving..... 176
Cargo
Cover..... 82
Management System..... 83
Tie-Downs..... 83
Car Wash Mode..... 183
Caution, Danger, and Warning..... 2
Center
Console, Storage..... 82
Chains and Other Traction Devices
Tire..... 324
Charge
Cord..... 99, 270, 273, 277

Charging... 107
AC... 262
DC... 264
Delay Override... 266
Plug-In... 261
Status Feedback... 266
System Light... 99
Utility Interruption... 278
When to Charge, Vehicle... 260
Charging Phone
Wireless... 90
Child Restraints
Infants and Young Children... 65
Lower Anchors and Tethers for Children... 70
Older Children... 63
Securing... 76, 78
Systems... 67
Where to Put... 69
Child Safety Locks... 16
Circuit Breakers... 297
Cleaning
Exterior Care... 330
Interior Care... 334
Climate Control Systems
Dual Automatic... 162
Rear... 166
Clock... 88
Setting... 154
Cluster, Instrument... 93
Collision Alert
Forward (FCA) System... 245
Collision Damage Repair... 355
Compartment
Underhood... 285
Compartments
Storage... 81
Compass... 88
Connected Services
Connections... 365
Diagnostics... 366
Navigation... 365
Connections
Connected Services... 365
Control
of a Vehicle... 172
Traction and Electronic Stability... 191
Controls
Headlight... 122
Steering Wheel... 133
Convex Mirrors... 25
Cooling System... 286
Cornering Lights... 126
Courtesy Transportation Program... 354
Cover
Cargo... 82
Cruise Control
Adaptive... 195
Light... 107
Super... 217
Cupholders... 81
Customer Assistance
Offices... 351
Text Telephone (TTY) Users... 351
Customer Information
Publications Ordering Information... 356
Customer Satisfaction Procedure... 347
Customer Support
and Online Account... 351
Cybersecurity... 358

D

Damage Repair, Collision... 355
Danger, Warning, and Caution... 2
Dashboard... 5
Data Collection
Infotainment System... 359
OnStar... 359
Data Recorders, Event... 359
Daytime Running Lights... 124
DC Charging... 264
Defensive Driving... 172
Delayed
Charging Override... 266
Locking... 15
Destination... 140

Diagnostics
Connected Services 366
Digital
Key 16
Disabled Vehicle
Transporting 328
Distracted Driving 171
Dome Lights 127
Door
Ajar Light 107
Delayed Locking 15
Locks 14
Power Locks 15
Driver
Assistance Systems, Advanced 234
Attention Assist 257
Information Center (DIC) 113
Mode Control 192
Mode Control Light 105
Teen 156
Drive Systems
All-Wheel Drive 187
Drive Unit
Electric 183
Driving
Assistance Systems 245
Defensive 172
for Better Energy Efficiency 170
Hill and Mountain Roads 175
If the Vehicle is Stuck 177
Impaired 172
Loss of Control 174
Off-Road Recovery 173
One-Pedal 186
Vehicle Load Limits 177
Wet Roads 174
Winter 176
Dual
Automatic Climate Control System 162

E

Electric
Brake Boost 187
Drive Unit 183
Parking Brake 187
Parking Brake Light 101
Electrical
Equipment, Add-On 279
Requirements for Battery Charging 278
Electrical System
Fuses and Circuit Breakers 297
Instrument Panel Fuse Block 302
Overload 296
Electronic Stability Control (ESC) Off
Light 104
Emergency
OnStar 361
Energy Efficiency
Driving 170
Engine
Cooling System 286
Entry Lighting 128
Event Data Recorders 359
Exit Lighting 128
Extender, Seat Belt 52
Exterior
Lighting Battery Saver 130

F

Flashers, Hazard Warning 125
Flat Tire 325
Floor Mats 337
Fluid
Brakes 289
Washer 287
Folding Mirrors 26
Follow Distance Indicator Light 103
Frequency Statement
Radio 357
Fuses
Fuses and Circuit Breakers 297
Instrument Panel Fuse Block 302
Underhood Compartment 298

G

Garage Door Opener
Programming... 119
Gas Strut(s)... 294
Gauges
Battery... 95
Odometer... 95
Power Indicator... 96
Speedometer... 95
Trip Odometer... 95
Warning Lights and Indicators... 91
General Information
Service and Maintenance... 339
Towing... 279
Vehicle Care... 282
Global Positioning System (GPS)... 141
Glove Box... 81
GM Mobility Reimbursement Program... 352
Guidance
Problems with the Route... 142

H

Hands-On Steering Assist... 206
Hands-On Steering Assist Light... 102
Hazard Warning Flashers... 125
Headlights
Aiming, Front... 295
Controls... 122
High-Beam On Light... 106
Leveling Control... 125
Off Reminder... 124
Service System Indicator... 106
System, Automatic... 124
Head Restraints... 35
Head-Up Display (HUD)... 116
Heated
and Ventilated Front Seats... 41
Mirrors... 27
Rear Seats... 45
Steering Wheel... 86
High-Beam
On Light... 106
Systems... 123
High-Speed Operation... 312
High Voltage
Battery Gauge... 95
Devices and Wiring... 295
Hill
and Mountain Roads... 175
Start Assist (HSA)... 189
Hood... 283
Horn... 86
How to Wear Seat Belts Properly... 47
How Your Vehicle is Updated... 367

I

If a Crash Occurs... 355
Indicators
Pedestrian Ahead... 103
Service Headlight System... 106
Vehicle Ahead... 103
Warning Lights and Gauges... 91
Infants and Young Children, Restraints... 65
Information
Publication Ordering... 356
Infotainment
Using the System... 133
Inspection
Multi-Point Vehicle... 341
Installing and Operating the Charge
Cord... 273
Instrument
Cluster... 93
Instrument Panel
Storage Area... 81
Instrument Panel Overview... 5
Interior
Rearview Mirrors... 27
Introduction... 2, 131

J

Jump
Starting... 325

K

Keys..... 7
Digital..... 16
Remote..... 8
Remote Operation..... 8

L

Labeling, Tire Sidewall..... 308
Lane
Keep Assist Light..... 102
Lap-Shoulder Belt..... 49
LATCH System
Replacing Parts after a Crash..... 76
LED Lighting..... 295
Liftgate..... 18
Lighting
Ambient..... 128
Entry..... 128
Exit..... 128
Illumination Control..... 126
LED..... 295
Lights
Adaptive Cruise Control..... 107
Airbag Readiness..... 98
Antilock Brake System (ABS) Warning..... 101
Automatic Emergency Braking (AEB) Disabled..... 103
Automatic Vehicle Hold (AVH)..... 102
Battery Fault..... 100
Brake System Warning..... 100
Charge Cord Connected..... 99
Charging System..... 99
Cornering..... 126
Cruise Control Light..... 107
Daytime Running..... 124
Dome..... 127
Door Ajar..... 107
Driver Mode Control..... 105
Electric Parking Brake..... 101
Electronic Stability Control (ESC), Off..... 104
Exterior Lighting Battery Saver..... 130
Follow Distance Indicator..... 103
Gauges and Indicators..... 91
Hands-On Steering Assist..... 102
High-Beam On..... 106
Lane Keep Assist..... 102
Low State of Charge..... 99
On Reminder..... 106
Reading..... 127
Seat Belt Reminders..... 96
Security..... 106
Service All-Wheel Drive..... 102
Service Electric Parking Brake..... 101
Service Vehicle Soon..... 100
Super Cruise..... 107
Tire Pressure..... 105
Traction Control System (TCS)/ Electronic Stability Control Light..... 104
Traction Off..... 104
Vehicle Ready..... 106
Locks
Automatic Door..... 15
Delayed Locking..... 15
Door..... 14
Lockout Protection..... 16
Power Door..... 15
Safety..... 16
Loss of Control..... 174
Lower Anchors and Tethers for Children (LATCH System)..... 70
Low-Profile Tires..... 307
Low State of Charge Light..... 99
Lumbar Adjustment
Front Seats..... 37

M

Maintenance
Recommended Fluids and Lubricants..... 343
Records..... 344
Schedule..... 340
Maps..... 139
Massage
Seats..... 38
Media
Avoiding Untrusted Devices..... 137

Memory Seats..... 38
Messages
Propulsion Power..... 119
Vehicle..... 118
Vehicle Speed..... 119
Mirrors
Automatic Dimming Rearview..... 28
Convex..... 25
Folding..... 26
Heated..... 27
Interior Rearview..... 27
Power..... 26
Rear Camera..... 28
Tilt in Reverse..... 27
Modes
Car Wash..... 183
Driver Control..... 192
Power..... 181
Monitor System, Tire Pressure..... 313
Multi-band Antenna..... 137
Multi-Point Vehicle Inspection (MPVI)..... 341

N

Navigation
Connected Services..... 365
Destination..... 140
Symbols..... 139
Using the System..... 138
New Vehicle Break-In..... 181

O

Odometer..... 95
Trip..... 95
Off-Road
Recovery..... 173
Older Children, Restraints..... 63
One-Pedal Driving..... 186
Online Account and Customer Support..... 351
OnStar..... 359
Additional Information..... 361
Emergency..... 361
Overview..... 360
Security..... 361
Outlets
Power..... 88
Overview..... 132
Instrument Panel..... 5
Owner Checks and Services..... 342

P

Park
Assist..... 235, 238
Parking
Brake and P (Park) Mechanism Check..... 293
Parking Assist
Automatic..... 239
Parking or Backing
Assistance Systems..... 235
Passenger
Airbag Status Indicator..... 98
Compartment Air Filter..... 167
Sensing System..... 58
Pedestrian
Ahead Indicator..... 103
Safety Signal..... 86
Perchlorate Materials Requirements, California..... 282
Phone
Apple CarPlay and Android Auto..... 153
Bluetooth..... 144, 149
Plug-In Charging..... 261
Port
USB..... 137
Post-Collision Braking..... 189
Power
Door Locks..... 15
Indicator Gauge..... 96
Mirrors..... 26
Modes..... 181
Outlets..... 88
Protection, Battery..... 129
Seat Adjustment..... 36
Windows..... 30
Pregnancy, Using Seat Belts..... 51
Privacy
Vehicle Data Recording..... 358
Problems with Route Guidance..... 142

Program
Courtesy Transportation... 354
Proposition 65 Warning
California... 1
Propulsion
Power Messages... 119
Publication Ordering Information... 356

Q

Québec Consumer Protection Act Disclosure
(Québec Customers Only)... 2

R

Radiator... 286
Radio
AM-FM Radio... 135
Frequency Statement... 357
Reception... 137
Satellite... 136
Reading Lights... 127
Ready Indicator... 106
Rear
Camera Mirror... 28
Climate Control System... 166
Heated Seats... 45
Seat Reminder... 42
Seats... 42
Rearview Mirrors
Automatic Dimming... 28
Reclining Seatbacks... 36
Recognition
Voice... 142
Recommended
Fluids and Lubricants... 343
Recorder
Surround Vision... 260
Records
Maintenance... 344
Recreational Vehicle Towing... 329
Regenerative Braking... 190
Reimbursement Program, GM Mobility... 352
Reminder
Headlights Off... 124
Lights On... 106
Seat Belt... 96
Remote
Key... 8
Key Operation... 8
Start... 13
Replacement Parts
Airbags... 63
Replacing
Airbag System... 63
LATCH System Parts After a Crash... 76
Seat Belt System Parts after a Crash... 53
Reporting Safety Defects
Canadian Government... 358
General Motors... 358
U.S. Government... 357
Requirements
Electrical Battery Charging... 278
Reverse Rim Wheels... 321
Reverse Tilt Mirrors... 27
Roads
Driving, Wet... 174
Roadside Assistance Program... 352
Roof
Rack System... 84
Sunroof... 32
Rotation
Monitor, Tires... 318
Tires... 318

S

Safety
Locks... 16
Pedestrian Signal... 86
System Check... 52
Safety Defects Reporting
Canadian Government... 358
General Motors... 358
U.S. Government... 357
Satellite Radio... 136
Scheduling Appointments... 354
Seat Belts... 45
Buckle To Drive... 46

- Care 52
- Extender 52
- How to Wear Seat Belts Properly 47
- Lap-Shoulder Belt 49
- Reminders 96
- Replacing after a Crash 53
- Use During Pregnancy 51

Seats
- Head Restraints 35
- Heated and Ventilated, Front 41
- Heated, Rear 45
- Lumbar Adjustment, Front 37
- Massage 38
- Memory 38
- Power Adjustment, Front 36
- Rear 42
- Rear Seat Reminder 42
- Reclining Seatbacks 36

Secondary Collision Mitigation Braking 189
Securing Child Restraints 76, 78
Security
- Light 106
- OnStar 361
- Vehicle 23
- Vehicle Alarm 23

Self-Sealing Tires 307
Service 168
- Maintenance Records 344
- Accessories and Modifications 282
- All-Wheel Drive Light 102
- Doing Your Own Work 282
- Electric Parking Brake Light 101
- Maintenance, General Information 339
- Parts Identification 345
- Scheduling Appointments 354
- Vehicle Soon Light 100

Servicing the Airbag System 62
Settings 154
Signals, Turn and Lane-Change 126
Specifications and Capacities 345
Speedometer 95
Start
- Assist, Hill 189
- Remote 13

Status
- Charging Feedback 266
- Vehicle 114

Steering 173
- Hands-On Assist 206
- Heated Wheel 86
- Wheel Adjustment 86
- Wheel Controls 133

Storage
- Center Console 82
- Compartments 81
- Cupholders 81
- Glove Box 81
- Instrument Panel Areas 81
- Roof Rack System 84

Storage Areas
- Cargo Cover 82
- Cargo Management System 83

Struts
- Gas 294

Stuck Vehicle 177
Summer Tires 308
Sunroof 32
Sun Visors 31
Super Cruise 217
- Light 107

Surround
- Vision System 236

Symbols 3
- Navigation 139

System
- Global Positioning 141

Systems
- Airbag 53
- High Beam 123
- Infotainment, Data Recording 359
- Roof Rack 84

T

Teen Driver 156
Text Telephone (TTY) Users 351
Theft-Deterrent Systems 25

Tires..... 305
All-Season..... 306
Buying New Tires..... 320
Chains and Other Traction Devices..... 324
Designations..... 309
Different Size..... 321
If a Tire Goes Flat..... 325
Inspection..... 318
Low-Profile..... 307
Pressure..... 311, 312
Pressure Light..... 105
Pressure Monitor Operation..... 314
Pressure Monitor System..... 313
Rotation..... 318
Rotation Monitor..... 318
Self-Sealing..... 307
Sidewall Labeling..... 308
Terminology and Definitions..... 309
Uniform Tire Quality Grading..... 322
Wheel Alignment and Tire Balance..... 323
Wheel Replacement..... 323
When It Is Time for New Tires..... 319
Winter..... 306
Towing
General Information..... 279
Recreational Vehicle..... 329
Traction
Control System (TCS)/Electronic Stability Control Light..... 104
Control/Electronic Stability Control..... 191
Off Light..... 104
Trademarks and License Agreements..... 159
Traffic
Sign Assistant..... 255
Transportation Program, Courtesy..... 354
Transporting
a Disabled Vehicle..... 328
Trip Odometer..... 95
Troubleshooting and Maintenance
Charge Cord..... 277
TTY Users
Customer Assistance..... 351
Turn and Lane-Change Signals..... 126

U

Underhood
Compartment Fuse Block..... 298
Compartment Overview..... 285
Uniform Tire Quality Grading..... 322
Universal Remote System
Operation..... 121
Programming..... 119
Updates
How Your Vehicle is Updated..... 367
Vehicle Update Additional Information..... 367
USB Port..... 137
Using
Infotainment System..... 133
Navigation System..... 138
Utility Interruption of Charging..... 278

V

Vehicle
Ahead Indicator..... 103
Alarm System..... 23
Automatic Hold..... 189
Automatic Hold Light..... 102
Canadian Owners..... 2
Control..... 172
Data Recording and Privacy..... 358
Identification Number (VIN)..... 345
Load Limits..... 177
Messages..... 118
Positioning..... 141
Ready Light..... 106
Security..... 23
Service Soon Light..... 100
Speed Messages..... 119
Status..... 114
Symbols..... 3
When to Charge..... 260
Vehicle Care
Tire Pressure..... 311
Vehicle Update
Additional Information..... 367

Ventilation, Air..... 166
Visors..... 31
Voice Recognition..... 142

W

Warning
Brake System Light..... 100
Caution and Danger..... 2
Hazard Flashers..... 125
Lights, Gauges, and Indicators..... 91
Warranty Information
California..... 349
Washer Fluid..... 287
Wheels
Alignment and Tire Balance..... 323
Different Size..... 321
Replacement..... 323
Reverse Rim..... 321
Where to Put the Restraint..... 69
Windows..... 30
Power..... 30
Windshield
Replacement..... 294
Wiper/Washer..... 87
Winter
Driving..... 176
Tires..... 306
Wiper
Blade Replacement..... 293
Wireless Phone Charging..... 90
Wiring, High Voltage Devices..... 295

Scan to Access

United States



Owner's Manuals
Warranty Information
Reference Guides
Links to GM Brand Websites
Many Additional Resources

Connected Services
1-888-4-ONSTAR

Canada





27LYRIQ_enUS_20272697A