

ESCALADE

TRAILER TOWING SUPPLEMENT

2027



NOT FOR RESALE

Contents

Trailer Towing 1

Index 37

Trailer Towing

General Towing Information

Warning

You can lose control when towing a trailer if the correct equipment is not used or the vehicle is not driven properly. For example, if the trailer is too heavy or the trailer brakes are inadequate for the load, the vehicle may not stop as expected. You and others could be seriously injured. The vehicle may also be damaged, and the repairs would not be covered by the vehicle warranty. Pull a trailer only if all the steps in the Trailer Towing Supplement have been followed. Ask your dealer for advice and information about towing a trailer with the vehicle.

To tow a disabled vehicle, see your owner's manual.

Driving Characteristics and Towing Tips

Driving with a Trailer

Warning

To prevent serious injury or death from carbon monoxide (CO), when towing a trailer:

- Do not drive with the liftgate, trunk/hatch, or rear-most window open.
- Fully open the air outlets on or under the instrument panel.
- Adjust the climate control system to a setting that brings in only outside air. See “Climate Control Systems” in the Index.

For more information about carbon monoxide, see your owner's manual.

Trailering is different than driving the vehicle by itself. Trailering affects handling, acceleration, braking, and durability. The combination of the vehicle and trailer is longer

©2026 General Motors LLC. All Rights Reserved.

NOT FOR RESALE

and not as responsive as the vehicle itself. Successful and safe trailering requires proper use of the correct equipment.

Become familiar with handling and braking by driving on a level road surface before driving on public roads.

The trailer structure, tires, and brakes must all be rated to carry the intended cargo. Inadequate trailer equipment can cause the combination to operate in an unexpected or unsafe manner.

Before towing a trailer:

- Follow all state and local laws that apply to trailer towing. These requirements vary from state to state.
- Install extended side view mirrors on your vehicle if your visibility is limited or restricted while towing. State laws may require the use of extended side view mirrors.
- Inspect all trailer hitch parts and attachments, safety chains, electrical connectors, lights, tires, and mirrors.
- If the trailer has electric brakes, start the combination moving and then manually apply the trailer brake controller to check that the trailer brakes work.
- Do not tow a trailer during the first 800 km (500 mi) of vehicle use to prevent damage to the vehicle.
- Perform the first oil change before heavy towing.

When towing a trailer:

- Do not drive over 80 km/h (50 mph) and do not make starts at full acceleration during the first 800 km (500 mi) of trailer towing.
- If equipped, turn off the following driver assistance features when towing a trailer. These features may turn off automatically when a trailer is detected:
  - Park Assist
  - Automatic Parking Assist
  - Reverse Automatic Braking
  - Rear Cross Traffic Alert
  - Rear Cross Traffic Braking
  - Lane Change Alert
  - Adaptive Cruise Control, unless equipped with trailering functionality. See your owner's manual.
- Tow in D (Drive). If equipped, use Tow/Haul mode for heavier trailers. See your owner's manual. If the transmission downshifts too often, use Manual mode to select a lower gear. See your owner's manual.
- Check that the cargo and trailer are secure and that the lights and any trailer brakes are working.
- Automatic Emergency Braking and Front Pedestrian Braking should be set to Alert.

Towing with a Stability Control System

You might hear the StabiliTrak/Electronic Stability Control system when towing. The system reacts to vehicle movement caused by the trailer, which mainly occurs during cornering. This is normal when towing heavier trailers.

Following Distance

Stay at least twice as far behind the vehicle ahead as you would when driving without a trailer to help avoid heavy braking and sudden turns.

NOT FOR RESALE

Passing

You need more passing distance when towing a trailer. You must drive much farther beyond the passed vehicle before returning to the lane. Pass on level roadways. Avoid passing on hills, if possible.

Backing Up

Hold the bottom of the steering wheel with one hand. To move the trailer to the left, move that hand to the left. To move the trailer to the right, move that hand to the right. Always back up slowly, and if possible, have someone guide you.

Making Turns

Caution

Turn more slowly and make wider arcs when towing a trailer to prevent damage to your vehicle. Making very sharp turns could cause the trailer to contact the vehicle.

Make wide turns when towing to prevent the trailer from crossing over soft shoulders or curbs, or striking road signs, trees, or other objects. Always signal turns well in advance. Do not steer or brake suddenly.

Towing on Grades

Reduce speed and shift to a lower gear before descending a long or steep downhill grade. If the transmission is not downshifted, the brakes may overheat, resulting in reduced braking efficiency.

Tow in D (Drive). If the transmission shifts too often under heavy loads and/or hilly conditions, shift the transmission to a lower gear, or use Tow/Haul mode, if equipped.

At higher altitudes, coolant boils at lower temperatures. If you turn off your vehicle immediately after towing at a high altitude on steep uphill grades, the vehicle may show signs of overheating. To avoid this, let the vehicle run, preferably on level ground, with the transmission in P (Park) for a few minutes before turning the vehicle off.

Viewing Systems

If equipped, the viewing systems on the vehicle can improve visibility while hitching, backing up, and driving with a trailer. See your owner's manual.

Parking on Hills

⚠ Warning

To prevent serious injury or death, always park your vehicle and trailer on a level surface when possible.

When parking your vehicle and trailer on a hill:

1. Press and hold the brake pedal, but do not shift into P (Park) yet. Turn the wheels toward the curb if you are facing downhill or into traffic if you are facing uphill.
2. Have someone place chocks under the trailer wheels.
3. When the wheel chocks are in place, gradually release the brake pedal to allow the chocks to support the load of the trailer.
4. Reapply the brake pedal. Then, apply the Electric Parking Brake and shift into P (Park).
5. Release the brake pedal.

NOT FOR RESALE

Leaving After Parking on a Hill

1. Apply and hold the brake pedal.
2. Start the vehicle.
3. Shift into the desired gear.
4. Release the parking brake.
5. Remove your foot from the brake pedal.
6. Drive slowly until the trailer is clear of the chocks.
7. Stop and have someone pick up and store the chocks.

Launching and Retrieving a Boat

Backing the Trailer into the Water

⚠ Warning

- Have all passengers get out of the vehicle before backing onto the sloped part of the ramp. Lower the driver and passenger side windows before backing onto the ramp. This will provide a means of escape in the unlikely event the vehicle slides into the water.

(Continued)

Warning (Continued)

- If the boat launch surface is slippery, have the driver remain in the vehicle with the brake pedal applied while the boat is being launched. The boat launch can be especially slippery at low tide when part of the ramp was previously submerged at high tide. Do not back onto the ramp to launch the boat if you are not sure the vehicle can maintain traction.
- Do not move the vehicle if someone is in the path of the trailer. Some parts of the trailer might be underwater and not visible to people who are assisting in launching the boat.

Caution

If the vehicle tires begin to spin and the vehicle begins to slide toward the water, remove your foot from the accelerator pedal and apply the brake pedal. Seek help to have the vehicle towed up the ramp.

Caution

If your trailer electrical circuits are not waterproof, to avoid damage, disconnect the trailer wiring before backing the trailer into water. Reconnect the wiring after removing the trailer from the water.

If the trailer has electric brakes that can function when the trailer is submerged, leave the electrical trailer connector attached to maintain trailer brake functionality while on the boat ramp.

To Back the Trailer Into the Water

1. If equipped, place the vehicle in Automatic Four-Wheel Drive or Four-Wheel Drive High.
2. Slowly back down the ramp until the boat is floating. Do not back down the ramp further than necessary.
3. Press and hold the brake pedal, but do not shift into P (Park).
4. Have someone place chocks under the front wheels of the vehicle.
5. Gradually release the brake pedal to allow the chocks to support the load of the trailer.

NOT FOR RESALE

6. Reapply the brake pedal. Then, apply the parking brake and shift into P (Park).
7. Release the brake pedal.

Pulling the Trailer from the Water

1. Press and hold the brake pedal.
2. Start the vehicle and shift into D (Drive).
3. Release the parking brake.
4. Let up on the brake pedal.
5. Drive slowly until the tires are clear of the chocks.
6. Stop and have someone pick up and store the chocks.
7. Slowly pull the trailer from the water.
8. Once you have driven the vehicle and trailer from the sloped part of the boat ramp, shift out of four-wheel-drive and into the drive mode that is appropriate for the road conditions.

Maintenance When Trailer Towing

A vehicle used to tow trailers requires service more often.

It is especially important to check the automatic transmission fluid, engine oil, axle lubricant, belts, cooling system, and brake system before and during each trip.

Check periodically that all nuts and bolts on the trailer hitch are tight.

Engine Cooling When Trailer Towing

The cooling system may temporarily overheat during severe operating conditions. See your owner's manual.

Trailer Towing

Trailer Weight

⚠ Warning

You and others could be seriously injured or killed if the trailer is too heavy or the trailer brakes are inadequate for the load. The vehicle may be damaged, and the repairs would not be covered by the vehicle warranty.

Only tow a trailer if all the steps in this section have been followed. Ask your dealer for advice and information about towing a trailer.

Safe trailering requires monitoring the weight, speed, altitude, road grades, outside temperature, and how frequently the vehicle is used to tow a trailer.

Trailer Weight Ratings

When towing a trailer, the combined weight of the vehicle, vehicle contents, trailer, and trailer contents must be below all the maximum weight ratings for the vehicle, including:

- Gross Combined Weight Rating (GCWR)
- Gross Combined Weight Rating (GVWR)
- Maximum Trailer Weight Rating
- Rear Gross Axle Weight Rating (GAWR-RR)
- Maximum Trailer Tongue Weight Rating

See “Weight-Distributing Hitch and Adjustment” under *Towing Equipment* ⇨ *9* to determine if equalizer bars are required to obtain the maximum trailer weight rating.

See “Trailer Brakes” under *Towing Equipment* ⇨ *9* to determine if brakes are required based on your trailer's weight.

The only way to be sure the weight ratings are not exceeded is to verify with a scale.

NOT FOR RESALE

A trailering information label on the driver side center pillar (B-pillar) shows tow rating information for the vehicle.

Gross Combined Weight Rating (GCWR)

Gross Combined Weight Rating (GCWR) is the total allowable weight of the completely loaded vehicle and trailer including any fuel, passengers, cargo, equipment, and accessories.

The Gross Combined Weight Rating (GCWR) for the vehicle is on the Trailering Information Label.

To confirm the Gross Combined Weight Rating (GCWR), load the vehicle and trailer for the trip with passengers and cargo, then weigh the vehicle and trailer on a public scale.

To calculate the Gross Combined Weight Rating (GCWR) with the individual weights:

1. Start with the "curb weight" from the Trailering Information Label.
2. Add the weight of the trailer loaded with cargo and ready for the trip.
3. Add the weight of all passengers.
4. Add the weight of all cargo in the vehicle.
5. Add the weight of hitch hardware such as a draw bar, ball, load equalizer bars, or sway bars.
6. Add the weight of any accessories or aftermarket equipment added to the vehicle.

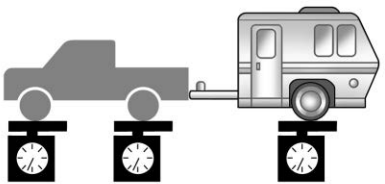

Gross Combined Weight (GCW) Alert

⚠ Warning

Always determine the actual weights of the loaded vehicle and trailer using a vehicle scale before beginning a trip. Never use

(Continued)

Warning (Continued)

the GCW Alert to determine whether the vehicle and trailer are properly loaded or overloaded. Do not drive with an overloaded vehicle or trailer. Death, serious injury, or property damage could occur.

If equipped, the Gross Combined Weight (GCW) Alert uses vehicle data to estimate the loaded weight of your vehicle or trailer and alert you if excess weight is suspected. It does not actually measure the loaded combined weight.

The alert will not activate unless:

- The feature is turned on in the Trailering application, see *Trailering App* ⇨ *19*; and
- The vehicle-trailer combination is driven with enough acceleration events for the software algorithm to estimate the combined vehicle and trailer weight; and
- The estimated weight is high enough to trigger the alert.

NOT FOR RESALE

The Gross Combined Weight Alert may display the following message(s) in the Driver Information Center or infotainment display:

Vehicle-Trailer May Be Over GCW Rating: This message indicates that the estimated combined weight of the vehicle and trailer is high enough that you should make sure the Gross Combined Weight Rating (GCWR) is not exceeded.

Vehicle-Trailer Is Over GCW Rating: This message indicates that the estimated combined weight of the vehicle and trailer is high enough that it has likely exceeded the Gross Combined Weight Rating (GCWR).

The Gross Combined Weight (GCW) Alert does not estimate whether the vehicle exceeds the Gross Vehicle Weight Rating (GCWR) or the Gross Axle Weight Rating-Rear (GAWR-RR), the trailer exceeds the maximum trailer weight rating, and the trailer tongue weight exceeds the maximum trailer tongue weight rating . See "Maximum Trailer Weight" later in this section.

Gross Vehicle Weight Rating (GVWR)

For information about the vehicle's maximum load capacity, see your owner's manual. When calculating the Gross Vehicle Weight Rating (GVWR) with a trailer attached, include the trailer tongue weight as part of the weight the vehicle is carrying.

Maximum Trailer Weight

The Maximum Trailer Weight is on the Trailering Information Label.

The maximum trailer weight rating is calculated using the process defined by SAE J2807 and based on the vehicle model and powertrain. This process assumes the vehicle has a driver, a front seat passenger, and all required towing equipment. The maximum trailer weight rating represents the heaviest trailer the vehicle can tow, but it may be necessary to reduce the trailer weight to stay within the Gross Combined Weight Rating (GCWR), Gross Vehicle Weight Rating (GVWR), maximum trailer tongue load, or Rear Gross Axle Weight Rating (GAWR-RR). This is especially true for heavier vehicles with high option content.

Rear Gross Axle Weight Rating (GAWR-RR)

The Rear Gross Axle Weight Rating (GAWR-RR) is the total weight the vehicle's rear axle can support. Do not exceed the Rear Gross Axle Weight Rating (GAWR-RR) for the vehicle with the tow vehicle and trailer fully loaded for the trip, including the weight of the trailer tongue. If using a weight-distributing hitch, do not exceed the Rear Gross Axle Weight Rating (GAWR-RR) before applying the weight distribution spring bars.

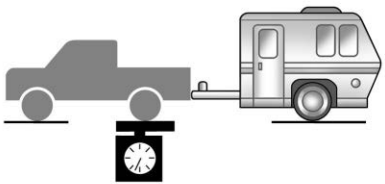

The Rear Gross Axle Weight Rating (GAWR-RR) is on the Trailering Information Label.

For additional assistance with trailering or additional information, see your dealer.

Maximum Trailer Tongue Weight Rating

The Maximum Trailer Tongue Weight Rating is the allowable trailer tongue weight that the vehicle can support using a conventional trailer hitch. It may be necessary to reduce

NOT FOR RESALE

the overall trailer weight to stay within the maximum trailer tongue weight rating while still maintaining the correct trailer load balance.

The Maximum Trailer Tongue Weight Rating is on the Trailering Information Label.

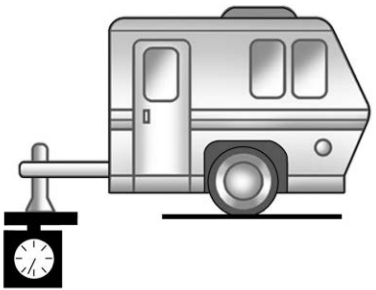

The trailer tongue weight contributes to the Gross Vehicle Weight. The Gross Vehicle Weight includes the curb weight of your vehicle, any passengers, cargo, equipment and the trailer tongue weight. Vehicle options, passengers, cargo, and equipment reduce the maximum allowable tongue weight the vehicle can carry, which also reduces the maximum allowable trailer weight.

After loading the trailer, separately weigh the trailer and trailer tongue. Calculate the trailer load balance percentage to see if the weights and distribution are appropriate for your vehicle. If the trailer weight is too high, it may be possible to transfer some of the cargo into your vehicle. If the trailer tongue weight is too high or too low, it may be possible to rearrange some of the cargo inside of the trailer.

Do not exceed the maximum allowable tongue weight for your vehicle. Use the shortest hitch extension available to position the hitch ball closer to your vehicle. This will help reduce the effect of the trailer tongue weight on the trailer hitch and the rear axle.

Trailer Load Balance

The correct trailer load balance must be maintained to ensure trailer stability. Incorrect load balance is a leading cause of trailer sway.

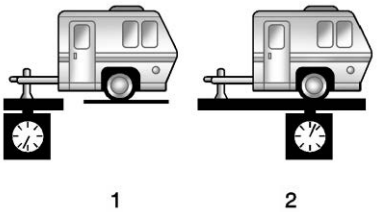

The trailer tongue weight (1) should be 10–15% of the total loaded trailer weight (2). Some specific trailer types, such as boat trailers, fall outside of this range. See the trailer owner's manual for the recommended trailer tongue weight for each trailer. Never exceed the maximum loads for your vehicle, hitch and trailer.

To calculate the trailer load balance percentage, divide weight (1) by weight (2) times 100.

If you use a cargo carrier in the trailer hitch receiver, choose a carrier that positions the load as close to the vehicle as possible. Make sure the total weight, including the carrier, is

NOT FOR RESALE

no more than half of the maximum allowable tongue weight for the vehicle or 227 kg (500 lb), whichever is less.

Towing Equipment

Hitches

⚠ Warning

In order to avoid serious injury or property damage, always follow the hitch manufacturer's instructions when securing your draw bar/coupling device to the vehicle's hitch receiver.

Ensure that the draw bar/coupling device is secured with a locking retainer pin or other means such that rotation of the pin or locking mechanism will not cause the pin to back out or loosen during use. Failure to correctly secure the draw bar/coupling device to the receiver can result in separation of the hitch/receiver while towing.

Always use the correct hitch equipment for your vehicle. Crosswinds, large trucks going by, and rough roads can affect the trailer and the hitch.

Proper hitch equipment for your vehicle helps maintain control of the vehicle-trailer combination. Many trailers can be towed using a weight-carrying hitch which has a coupler latched to the hitch ball, or a tow eye latched to a pintle hook.

Other trailers may require a weight-distributing hitch that uses spring bars to distribute the trailer tongue weight between your vehicle and trailer axles.

Consider using mechanical sway controls with any trailer. Ask a trailering professional about sway controls or see the trailer manufacturer's recommendations and instructions.

See “Maximum Trailer Tongue Weight” under *Trailer Towing* ⇨ *5* for weight limits with various hitch types.

Conventional Hitch

A conventional hitch is bolted to the frame or cross member of the tow vehicle, and is generally rated Class 2, 3, 4, or 5.

When using a conventional hitch, always use the correct hitch ball size for the trailer. The correct trailer hitch ball size will be shown on the trailer's coupler. The ball's shank size should match the hole in the draw-bar where the ball will attach. If the ball's shank is too small for the hole, the ball may move and come loose. The hitch ball weight rating should exceed the Gross Vehicle Weight Rating for your trailer.

Hitch Cover

Caution

Improper removal of the hitch cover may result in damage to the rear fascia. If equipped, detach the lower fasteners when removing the hitch cover and then lift or slide the cover to remove it from the fascia. Do not use excessive force.

Your vehicle may be equipped with a hitch cover, either from the factory or added by your dealer with an accessory hitch. If your vehicle is equipped with a hitch cover, it is designed to be removed easily without tools.

NOT FOR RESALE

Weight-Distributing Hitch and Adjustment

A weight-distributing hitch may be useful with some trailers. Use the following guidelines to determine if a weight-distributing hitch is required.

Trailer Weight	Weight Distributing Hitch	Hitch Distribution
Up to 2 720 kg (6,000 lb)	Optional	50%
Over 2 720 kg (6,000 lb)	Required	50%

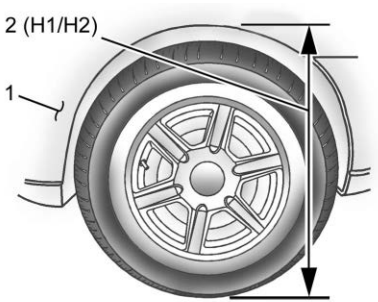

1. Front of Vehicle
2. H1/H2 Body to Ground Distance

When using a weight-distributing hitch, measure the front fender height distance (2) before connecting the trailer. Adjust the spring bars until the front fender height distance (2) is the same height before the trailer was connected. Do not reduce the front fender height below the initial distance (2). See "Leveling the Trailer" later in this section.

Adjusting the Equalizer Bars

1. Position the truck so that the trailer is ready to connect. Keep the trailer detached.
2. Measure the height of the top of the front wheel opening at the fender to the ground (H1).
3. Attach the vehicle to the trailer. Do not attach weight distribution bars at this time.
4. Measure the height of the top of the front wheel opening on the fender to the ground (H2).
5. Install and adjust the tension in the weight distributing bars per the manufacturers' recommendations so that the height of the front fender is approximately H2-[(H2-H1)/2] (half way between the two measured ride heights).
6. Visually inspect the trailer and weight-distributing hitch to ensure that you have met the manufacturer's recommendations.

NOT FOR RESALE

Measurement	Height Example 1500 (mm)
H1	1000
H2	1050
H2–H1	50
(H2–H1)/2	25
H2–[(H2–H1)/2]	1025

Adjusting the Equalizer Bars with Air Suspension

1. Adjust the air suspension to Normal Ground Clearance Height. See your owner's manual
2. Position the vehicle so that the trailer is ready to connect. Keep the trailer detached.
3. Enable air suspension Service mode using the infotainment screen. See “Service Mode” in your owner's manual.
4. Measure the height of the top of the front wheel opening at the fender to the ground (H1).
5. Attach the vehicle to the trailer. Do not attach the weight distribution bars at this time.
6. Measure the height of the top of the front wheel opening on the fender to the ground (H2).
7. Install and adjust the tension in the weight distributing bars per the manufacturers' recommendations so that the height of the front fender is approximately H2-[(H2-H1)/3] (1/3 between the two measured ride heights, above the primary ride height {H1}).
8. Disable “Service mode”. Air suspension will automatically adjust ride height.
9. Visually inspect the trailer and weight-distributing hitch to ensure that you have met the manufacturer's recommendations.

NOT FOR RESALE

Measurement	Height Example 1500 (mm)
H1	1000
H2	1060
H2-H1	60
(H2-H1)/3	20
H2-[(H2-H1)/3]	1040

Leveling the Trailer

⚠ Warning

Always level the trailer front-to-back using the correct trailer hitch drawbar. Towing with a trailer that is not level can result in incorrect loading of trailer axles, springs, and tires, which can lead to trailer sway, trailer damage, and/or trailer tire blowouts resulting in an accident causing potential injury and/or death. Do not attempt to tow a trailer that is not level.

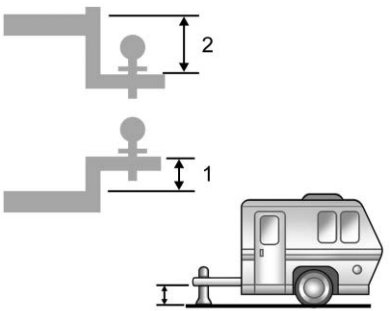

1. Drawbar rise
2. Drawbar drop

Select the correct hitch drawbar rise or drop to level the trailer.

Tires

- Do not tow a trailer while using a compact spare tire on the vehicle.
- You must properly inflate tires to support loads while towing a trailer. See your owner's manual for instructions on proper tire inflation.

Safety Chains

⚠ Warning

Always cross trailer safety chains and never allow them to drag on the ground. Improper installation can result in damage to the chains and could lead to loss of control of the trailer and tow vehicle. Serious injury can occur if the trailer detaches from the tow vehicle.

Conventional Hitch

Always attach chains between the vehicle and the trailer. Attach the chains to the holes on the trailer hitch platform. Cross the safety chains under the tongue of the trailer to help prevent the tongue from contacting the road if it becomes separated from the hitch. Leave just enough slack so the combination can turn.

NOT FOR RESALE

Trailer Brakes

Warning

Never attempt to tamper with the hydraulic brake system for your trailer brakes. Do not connect a trailer's hydraulic brake system directly to your vehicle's hydraulic brake system. If you do, both the vehicle antilock brakes and the trailer brakes may not function, which could result in a crash.

Loaded trailers over 900 kg (2,000 lb) must be equipped with brake systems and with brakes for each axle.

Use trailer braking equipment meeting or exceeding the Canadian Standards Association (CSA) requirement CAN3-D313.

State or local regulations may require trailers to have their own braking system if the loaded weight of the trailer exceeds a maximum value. Read and follow the instructions for the trailer brakes so they are installed, adjusted, and maintained properly.

Trailer Wiring Harness

Basic Trailer Wiring

Warning

Incorrect trailer wiring may cause blown fuses, damaged wires, trailer brakes being permanently applied, or trailer brakes not applying. This could result in a crash and/or may cause damage to the vehicle. Always follow the connector/ trailer manufacturer's instructions for your trailer's wiring connection.

Warning

If mud, dirt, salt and water are not removed from the connector prior to installation, it may cause the trailer wiring harness to be loose and result in damage to the vehicle. Always ensure the connector is fully secured in the trailer wiring harness.

Use only a round, seven-wire connector with flat blade terminals meeting SAE J2863 specifications for proper electrical connectivity.

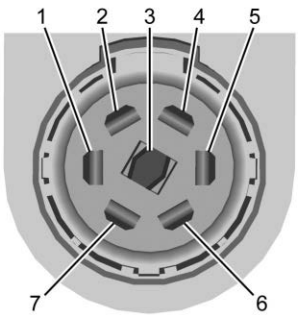

1. Left Turn/Brake
2. Tail Lights
3. Reverse Lights
4. Battery Feed
5. Right Turn/Brake
6. Electric Brakes
7. Ground

Electric Trailer Brake Control Wiring Provisions

Wiring provisions for an aftermarket electric trailer brake controller are included with the vehicle as part of the trailer wiring package. The harness contains the following circuits:

- Electric Trailer Brakes

NOT FOR RESALE

- Battery Feed
- Brake Apply Signal
- Ground

Refer to the aftermarket electric trailer brake controller owner's manual to determine wire color coding of the electric trailer brake controller. The wire colors on the brake controller may be different from the vehicle. Your dealer or a qualified service center should install the electric trailer brake controller.

Trailer Lights

Always check that all trailer lights are working at the beginning of each trip, and periodically on longer trips.

If equipped, the Trailering App will monitor trailer lights. Driver Information Center messages and Trailering App alerts may display if lighting circuit issues are detected. When a trailer cannot be detected, the trailer-related Driver Information Center messages and/or Trailering App alerts will not display.

The Trailering App is not a substitute for manually inspecting your trailer lights. See *Trailering App* ⇨ *19*.

Trailer Connection and Light Messages

If equipped with the Trailering App, you may see the following message(s) if the vehicle detects an issue with a trailer connection or light:

- TRAILER DISCONNECTED CHECK CONNECTION displays when you disconnect a connected trailer. It appears immediately when the vehicle is on, or upon the next start-up if you disconnected the trailer while the vehicle was off. Check the trailer connection as appropriate.
- CHECK TRAILER LAMP displays when there is a detected light or wiring fault on the trailer. Check the wiring and lights.

Turn Signals When Towing a Trailer

When properly connected, the trailer turn signals will illuminate to indicate the vehicle is turning, changing lanes, or stopping. When towing a trailer, the arrows on the instrument cluster will illuminate even if the trailer is not properly connected or the bulbs are burned out.

Tow/Haul Mode

If equipped, Tow/Haul mode assists when pulling a heavy trailer, or a large/heavy load. For instructions on how to enter Tow/Haul Mode, see your owner's manual.

Integrated Trailer Brake Control System

⚠ Warning

Connecting a trailer that has an air brake system may result in reduced or complete loss of trailer braking, including increased stopping distance or trailer instability which could result in serious injury, death, or property damage. Only use the ITBC system with electric or electric over hydraulic trailer brake systems.

The vehicle may have an Integrated Trailer Brake Control system for use with electric trailer brakes or most electric over hydraulic trailer brake systems. These instructions apply to both types of electric trailer brakes.



NOT FOR RESALE

This symbol is on the Trailer Brake Control Panel on vehicles with an Integrated Trailer Brake Control system. The output to the trailer brakes is proportional to the amount of vehicle braking. Available output to the trailer brakes can be adjusted to a wide range of trailering situations.

The Integrated Trailer Brake Control system is integrated with the vehicle brake, antilock brake, and StabiliTrak/Electronic Stability Control systems. In trailering conditions that cause the vehicle's antilock brake or StabiliTrak/Electronic Stability Control systems to activate, power sent to the trailer's brakes automatically adjusts to minimize trailer wheel lock-up. This does not imply that the trailer has StabiliTrak/Electronic Stability Control.

For the Integrated Trailer Brake Control system to function properly, the vehicle brake, ABS, and StabiliTrak/Electronic Stability Control systems must be functioning properly.

The Integrated Trailer Brake Control system is powered through the vehicle's electrical system. Turning the vehicle off will also turn off the Integrated Trailer Brake Control system. The Integrated Trailer Brake Control system is fully functional only when the vehicle is on.

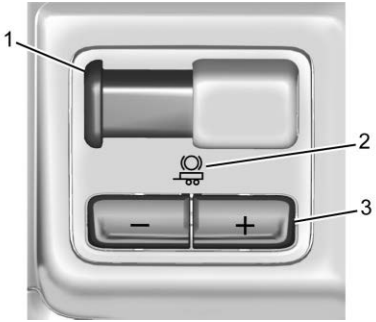

Trailer Brake Control Panel

1. Manual Trailer Brake Apply Lever
2. Trailer Symbol
3. Trailer Gain Adjustment Buttons

The Trailer Brake Control Panel is within reach of the driver. See your owner's manual.

The trailer symbol indicator turns amber when a trailer with electric brakes is connected.

The control panel allows adjustment to the amount of output, referred to as trailer gain, available to the trailer brakes and allows manual application of the trailer brakes. Use the trailer brake control panel and the Driver Information Center trailer brake display page to adjust and display power output to the trailer brakes.

Trailer Brake Driver Information Center Display Page

The display page indicates:

- Trailer gain setting
- Trailer brakes output
- Trailer connection
- System operational status

To display, perform one of the following:

- Scroll through the Driver Information Center menu
- Press a trailer gain (+) or (–) button
- Activate the manual trailer brake apply lever

TRAILER GAIN: Press and release a trailer gain (+) or (-) adjustment button to see and adjust recall the current trailer gain setting. . Press the trailer gain (+) or (-) to adjust. Each press and release of the gain button will change the trailer gain setting. To turn the output to the trailer off, set adjust the trailer gain setting

NOT FOR RESALE

to 0.0. You can adjust The gain setting can be adjusted from 0.0-10.0 with a trailer connected or disconnected.

TRAILER OUTPUT: This displays anytime you connect a trailer with electric brakes. Output to the trailer brakes is based on the amount of vehicle braking present and relative to the trailer gain setting. Output displays from 0-100% for each gain setting.

The Trailer Output will indicate "------" on the trailer brake display, whenever the following occur:

- No trailer is connected.
- A trailer without electric brakes is connected. No Driver Information Center message displays.
- A trailer with electric brakes has become disconnected. CHECK TRAILER WIRING displays on the Driver Information Center.
- There is a fault present in the wiring to the trailer brakes. CHECK TRAILER WIRING displays on the Driver Information Center.
- The Integrated Trailer Brake Control system is not working due to a fault. SERVICE TRAILER BRAKE SYSTEM displays in the Driver Information Center.

Manual Trailer Brake Apply Lever

Slide the Manual Trailer Brake Apply Lever to apply the trailer electric brakes independent of the vehicle brakes. Use this lever to adjust trailer gain to achieve the proper power output to the trailer brakes. This lever may also be used to engage trailer braking at any time. The trailer and the vehicle brake lights will come on when either vehicle brakes or manual trailer brakes are applied and properly connected.

Trailer Gain Adjustment Procedure

⚠ Warning

Trailer brakes that are over-gained or under-gained may not stop the vehicle and the trailer as intended and can result in a crash. Always follow the instructions to set the Trailer Gain for the proper trailer stopping performance.

Trailer gain should be set for a specific trailering condition and you must be readjusted anytime vehicle loading, trailer loading, or road surface conditions change.

To adjust trailer gain for each towing condition:

1. Drive the vehicle with the trailer attached on a level road surface representative of the towing condition and free of traffic at about 32–40 km/h (20–25 mph) and fully apply the Manual Trailer Brake Apply Lever.

   Adjusting trailer gain at speeds lower than 32–40 km/h (20–25 mph) may result in an incorrect gain setting.

2. Adjust the trailer gain, using the trailer gain (+) or (–) buttons, to just below the point of trailer wheel lock-up, indicated by trailer wheel squeal or tire smoke when a trailer wheel locks.

   Trailer wheel lock-up may not occur if towing a heavily loaded trailer. Adjust the trailer gain to the highest allowable setting for the towing condition.

3. Readjust trailer gain anytime vehicle loading, trailer loading, or road surface conditions change or if you notice trailer wheel lock-up at any time while towing.

NOT FOR RESALE

Other Integrated Trailer Brake Control-Related Driver Information Center Messages

⚠ Warning

Driving while the trailer braking system is malfunctioning increases the load on the vehicle braking system and increases stopping distances, which can lead to trailer instability. Prolonged driving may limit the ability to make a complete stop as intended and can result in a crash. Drive slowly, and when it is safe, pull over to address the issue.

TRAILER BRAKES CONNECTED: briefly displays when you first connect a trailer with electric brakes to the vehicle. This message will automatically turn off after about 10 seconds.

CHECK TRAILER WIRING: displays if:

- The Integrated Trailer Brake Control system first determines connection to a trailer with electric brakes and then the trailer harness becomes disconnected or loose.
  - The disconnect occurs while the vehicle is stationary. This message will automatically turn off in about 30 seconds. This message will also turn off if you can acknowledge or reconnect the trailer harness.
  - The disconnect occurs while the vehicle is moving. This message will continue until you turn off the vehicle. This message will also turn off if you acknowledge it or reconnect the trailer harness.
  - There is an electrical fault in the wiring to the trailer brakes. This message will continue as long as there is an electrical fault in the trailer wiring. This message will also turn off if you acknowledge it.

To determine whether the electrical fault is on the vehicle side or trailer side of the trailer wiring harness connection:

1. Disconnect the trailer wiring harness from the vehicle.
2. Turn the vehicle off.
3. Wait 10 seconds, then turn the vehicle back on.
   - If the CHECK TRAILER WIRING message reappears, the electrical fault is on the vehicle side.
   - If the CHECK TRAILER WIRING message only reappears when connecting the trailer wiring harness to the vehicle, the electrical fault is on the trailer side.

SERVICE TRAILER BRAKES or REDUCED TRAILER BRAKING: displays if the electric trailer brake performance is either reduced or non-functional.

HOLD LAST KNOWN GAIN: displays if it is no longer possible to adjust the trailer brake gain. Trailer brakes may or may not be functional, and brake gain cannot be adjusted according to road conditions. The trailer brakes may remain functional until the next time the vehicle is turned off.

TRAILER BRAKES DISABLED SERVICE REQUIRED: displays when there is a problem with the Integrated Trailer Brake Control system. If this message continues over multiple restarts, have the vehicle serviced.

If either the CHECK TRAILER WIRING, TRAILER BRAKES DISABLED SERVICE REQUIRED, SERVICE TRAILER BRAKES, or REDUCED TRAILER BRAKING message displays while driving, the Integrated Trailer Brake Control system may not be functional. When traffic conditions allow, carefully pull over to the side of the road

NOT FOR RESALE

and turn the vehicle off. Check the wiring connection to the trailer and turn the vehicle back on. If either of these messages continue, either the vehicle or trailer needs service.

A GM dealer may be able to diagnose and repair problems with the trailer. However, any diagnosis and repair of the trailer is not covered under the vehicle warranty. Contact your trailer dealer for assistance with trailer repairs and trailer warranty information.

Trailer Sway Control (TSC)

Warning

Trailer sway can result in a crash and in serious injury or death, even if the vehicle is equipped with TSC.

If the trailer begins to sway, reduce vehicle speed by gradually removing your foot from the accelerator. Then pull over to check the trailer and vehicle to help correct possible causes, including an improperly or overloaded trailer, unrestrained cargo, improper trailer hitch configuration, or improperly inflated or

(Continued)

Warning (Continued)

incorrect vehicle or trailer tires. See *Towing Equipment* ⇨ *9* for trailer ratings and hitch setup recommendations.

Vehicles equipped with the Trailer Sway Control system use the StabiliTrak/Electronic Stability Control system to control trailer sway. See your owner's manual. Trailer sway is the side-to-side motion of a trailer while towing.

Trailer Sway Control will not function if the StabiliTrak/Electronic Stability Control system is disabled or has failed.

If equipped with the Integrated Trailer Brake Control system, and the trailer has an electric brake system, TSC may also apply the trailer brakes.



When the system detects trailer sway and activates, the StabiliTrak/Electronic Stability Control warning light flashes on the instrument cluster.

If the system detects increased trailer sway, it applies the vehicle brakes at each wheel to limit motion. You may notice the vehicle limit acceleration.

Aftermarket Electronic Trailer Sway Control Devices

Warning

Use of aftermarket electronic trailer sway control devices could result in reduced trailer brake performance, loss of trailer brakes, or other malfunctions, and result in a crash. You or others could be seriously injured or killed. Before using one of these devices:

(Continued)

NOT FOR RESALE

Warning (Continued)

- Ask the device or trailer manufacturer if the device has been thoroughly tested for compatibility with the make, model, and year of your vehicle and any optional equipment installed on your vehicle.
- Before driving, check the trailer brakes are working properly, if equipped. Drive the vehicle with the trailer attached on a level road surface that is free of traffic at about 32-40 km/h (20-25 mph) and fully apply the manual trailer brake apply lever. Also, check the trailer brake lights and other lights are functioning correctly.
- If the trailer brakes are not operating properly at any time, or if a Driver Information Center (DIC) message indicates problems with the trailer connections or trailer brakes, carefully pull the vehicle over to the side of the road when traffic conditions allow.

Some trailers may come equipped with an electronic device designed to control trailer sway. Aftermarket equipment manufacturers also offer similar devices that connect to the wiring between the trailer and the vehicle. If equipped, these devices may interfere with the vehicle trailer brake systems or other systems, including integrated anti-sway systems. Messages related to trailer connections or trailer brakes could appear on the Driver Information Center. The effects of these aftermarket devices on vehicle handling or trailer brake performance is not known.

Trailer Tires

Special Trailer tires differ from vehicle tires. Special Trailer tires are designed with stiff sidewalls to help prevent sway and to support heavy loads. These features can make it difficult to determine if the trailer tire pressures are low only based on a visual inspection.

Always check all trailer tire pressures before each trip when the tires are cool. Low trailer tire pressure is a leading cause of trailer tire blow-outs.

If the vehicle is equipped with a trailer tire pressure monitoring system, see the "Trailer Tire Pressure Setup" section in *Trailering App* ⇨ *19*.

Trailer tires deteriorate over time. The trailer tire sidewall will show the week and year the tire was manufactured. Many trailer tire manufacturers recommend replacing tires more than six years old.

Overloading is another leading cause of trailer tire blow-outs. Never load your trailer with more weight than the tires are designed to support. The load rating is located on the trailer tire sidewall.

Always know the maximum speed rating for the trailer tires before driving. This may be significantly lower than the vehicle tire speed rating. The speed rating may be on the trailer tire sidewall. If the speed rating is not shown, the default trailer tire speed rating is 105 km/h (65 mph).

Trailering App

If equipped, the Trailering App is on the home page of the infotainment screen.

NOT FOR RESALE

This feature allows profiles for connected trailers to be created to view status, to store and track trailer usage information, and to set up towing assistance features.

The Trailering App welcome page appears when the Trailering App is opened for the first time from the infotainment home screen.

- When a trailer is electrically connected and a trailer profile has not been created, there is an option to create a profile, use a guest profile, or select Accessory/No trailer
- When a trailer is electrically connected after a Trailer Profile has been created, the trailer detection pop-up appears with a list of all of the custom Trailer Profiles made on the vehicle. To load an existing Trailer Profile, select one of the Trailer Profiles listed, or load the Guest Trailer Profile by selecting GUEST TRAILER. Touching Accessory/No trailer selects Accessory/No trailer as the active Trailer Profile and dismisses the pop-up.

Create a Trailer Profile

1. Touch Add New Trailer on the trailer detection pop-up or touch + Add Trailer Profile in the Trailering App.
2. Follow the on-screen instructions to set up profile.
3. After a profile is created, set up for additional trailer features may become available, such as Tow/Haul Mode reminder, Trailer Tire Pressure Monitoring System, maintenance reminders, or camera views and guides.

Import a Trailer Profile

1. Touch Import on the trailer detection pop-up or touch Import in the Trailering App
2. Follow the on-screen instructions to import a profile.
3. After a profile is imported, it can be selected from the trailer list. The Tow/Haul mode reminder, Brake Gain Setting and Trailer Tire Pressure sensor learning, if equipped, do not import.

A pop-up will indicate the import was successful. Touch OK to return to the trailer list and select the trailer profile. The Tow/Haul Mode reminder, Brake Gain Setting and Trailer Tire Pressure sensor learning, if equipped, do not import.

Trailer Feature Setup

Trailer Tire Monitoring

If the Trailer Tire Pressure Monitoring System is detected, touch the Trailer Tire Monitoring icon to set up trailer tire monitoring.

1. Select trailer tire speed rating.
2. Enter trailer tire manufacturing date number.
3. Follow the on-screen instructions to complete the trailer tire sensor learn process.

The trailer tire pressure sensors can transmit up to 7 m (23 ft) from the hitch receiver of the vehicle.

A trailer must be electrically connected to the vehicle before starting the sensor-to-vehicle learn process. The recommended tire pressure must be entered for the trailer tires.

After selecting Start from the Learn Sensors screen, use the Tool Method or the Manual Method (described below) to learn each Trailer Tire Pressure Monitoring System sensor, during which the current tire number will be highlighted. The vehicle has a maximum of two minutes to detect and label each sensor. After each sensor is learned, a check mark appears

NOT FOR RESALE

next to the tire, the vehicle horn sounds, the vehicle brake lights flash, and all working trailer lights flash.

Tool Method: A Trailer Tire Pressure Monitoring System activation tool can be purchased separately to learn the sensor locations.

Manual Method: Without the tool, the air pressure can be increased or decreased in each tire for 10 seconds. Do not exceed the maximum inflation pressure found on the tire sidewalls. Make sure to re-adjust tire pressure to the recommended level when the process is complete.

Sensor Learning Steps

To complete the sensor-to-vehicle learn process:

1. Touch Start on the Learn Sensors screen. The horn chirps twice and the Learning Active screen appears on the infotainment display.
2. Start with the driver side front trailer tire.
3. Activate the tool near the valve stem or adjust the air pressure of this tire until the horn chirps and all working vehicle and trailer lights flash.
4. The process stops without saving the sensor locations if this step takes more than two minutes.
5. Move to the next tire and repeat Step 3 for each sensor. The horn chirps twice when all sensors are completed.
6. Return to the vehicle to complete the setup.

Trailer Maintenance

Follow the on-screen instructions to set up maintenance reminders. The maximum number of reminders is 50. See the "Maintenance" section below.

Camera Views and Guides

To set up the trailer camera and guideline features, if equipped, touch the Camera Views and Guides icon.

1. Select the number of axles on the trailer.
2. Select the wheel location on the trailer (inboard or outboard).
3. Enter the trailer dimensions as prompted.

Follow the on-screen instructions to complete setup for available features.

Certain trailer features require a compatible trailer profile be configured and selected. A compatible trailer is a box type trailer (cargo, camper, etc.) with a conventional hitch.

Transparent Trailer Setup

If equipped, the rear trailer camera must be mounted on the trailer and electrically connected to the vehicle before transparent trailer feature can be used. See your owner's manual.

Follow the on-screen instructions to enter the trailer dimensions.

Trailer dimensions must be in range and transparent trailer must be calibrated before use.

- Trailer Length: Measure from center of coupler to furthest rear point on the trailer.
- Trailer Width: Measure from the left most edge of the trailer, including the wheels, to the right most edge.
- Trailer Body Width: Measure from the left edge to the right edge of the trailer body. This is only applicable to trailers with outboard tires.
- Trailer Height: Measure from ground to tallest point of the trailer.

NOT FOR RESALE

- Hitching Point Length: Measure from the center of the coupler to middle of tires.
- Trailer Tongue Length: Measure from the center of the coupler to the trailer front wall if the trailer has a flat front. If it does not have a flat front, measure from the center of the coupler to the corner of the sidewall (the point where the taper meets the full width of the trailer).
- Vehicle Hitch Height: Measure from ground to top of coupler.
- Vehicle Hitch Length: Measure from hitch receiver to center of ball.

If trailer dimensions are out of range, this feature is unavailable. Ensure the rear trailer camera is connected.

Follow on-screen instructions to drive forward to complete calibration.

Rear Trailer Guidance Setup

If equipped, a rear trailer camera must be mounted on the trailer and electrically connected to the vehicle before the rear trailer guidance feature can be used. See your owner's manual.

Trailer dimensions must be in range to enable this feature.

- Trailer Length: Measure from center of coupler to furthest rear point on the trailer.

If trailer dimensions are out of range, this feature is unavailable. Ensure rear trailer camera is connected.

Follow the on-screen instructions to drive forward to complete calibration.

Jack-Knife Alert Setup (if equipped)

If equipped, follow the on-screen instructions to drive forward to complete calibration.

Trailer Length Indicator Setup

Follow the on-screen instructions to drive forward to complete calibration.

Trailer Side Blind Zone Alert Setup

Follow the on-screen instructions to enter the trailer dimensions.

Trailer dimensions must be in range to enable this feature.

- Trailer Length: Measure from center of coupler to furthest rear point on the trailer.
- Trailer Width: Measure from the left edge to the right edge of the trailer body.

If trailer dimensions are out of range, this feature is unavailable.

Trailer Navigation

To set up trailer navigation routing support, if equipped, touch Trailer Navigation.

Follow the on-screen instructions to select the number of axles on the trailer and enter the trailer dimensions.

Trailer dimensions must be in range to enable this feature.

- Hitching Point Length: Measure from center of coupler to middle of tires
- Trailer Length: Measure from center of coupler to furthest rear point on the trailer
- Trailer Height: Measure from ground to tallest point of the trailer
- Trailer Total Width: Measure from the left most edge of the trailer, including the wheels, to the right most edge

Status View

If a trailer is connected, the Status view shows status information for the active trailer profile.

NOT FOR RESALE

If no trailer is connected, the Status view shows the last trailer profile with a status of Not Connected.

The Status view shows:

- Tires (if equipped)
- Lights
- Cameras (if equipped)
- Maintenance
- Checklist
- Weight
- Brakes (if equipped)
- Boat Ramp Assist

Each section shows high level status information for the feature.

- Selecting a section will open up a new screen with additional information and/or options.
- Selecting the checklist or maintenance icon opens up the corresponding screen.
- Selecting camera opens a corresponding view.

Lights

This view displays the names of the trailer connector pins, a graphic of the trailer connector, and a graphic of the back of the trailer.

Any connector pin that fails will be amber color, and the location of the corresponding connection is highlighted on the graphic of the back of the trailer.

- If a trailer connection is detected without any faults, the view will display No Issues Found.
- If a connected trailer disconnects, a message immediately appears on the Driver Information Center if the vehicle is on, or the next time the vehicle is turned on. Check your trailer connection if needed.
- When a trailer is connected, the Trailering App detects the trailer connection using the Stop/Turn Signal lighting circuits and alerts the driver by requesting a trailer profile setup through the Trailering App on the infotainment screen. If a default trailer profile is selected, the Trailering App will not display a Trailer Detection Alert to the user when a trailer is connected.
- When a trailer is connected and the vehicle is off, the Trailering App periodically pulses the lighting circuits of the trailer to verify it is still connected. The trailer lights may periodically flash as a result of this trailer connection detection. These flashes may be more visible in dark ambient light environments. The flashing or flickering lights are a normal condition, and the Trailering App has built-in protections to prevent the battery from draining. When Theft Alert is also enabled the frequency and pattern of this flashing will change.

NOT FOR RESALE

Connection Problem

If any of the trailer connections are lost, a message about the connection issue will appear on the Driver Information Center. The infotainment display also shows the connection issue in the Lights Status view.

Connection Trailer Lighting Faults Detected

The Trailering App monitors for electrical faults on the trailer lights. A message about the lighting issue appears on the Driver Information Center. The infotainment display also shows the lighting issue in the Lights Status view. Repair your trailer lights if needed. A trailer lighting issue is not covered by your GM warranty.

The Running Lights connection may not detect partial outages. Activate the light test to check all trailer lights. See "Light Test" following.

Light Test

Touch Start Light Test to cycle the trailer lights on and off to determine if they are working. The test follows this sequence:

1. The running lights turn on first and remain on throughout the sequence.
2. The brake lights turn on for about two seconds.
3. The left turn signal light flashes three times.
4. The right turn signal light flashes three times.
5. The reverse lights turn on for about two seconds.
6. Steps 2–5 repeat for approximately one minute and 45 seconds, or until the test deactivates.

Select Stop to manually end the test.

The sequence also deactivates when any of the following occur:

- The vehicle is turned off.
- The transmission is shifted out of P (Park).
- The brake pedal is pressed.
- The turn signal is activated.
- The hazard warning lights are activated.

Tires

If the Trailer Tire Pressure Monitoring System sensor-to-vehicle learn process was completed, the status view will display the current tire pressure and temperature of the trailer tires related to the active Trailer Profile. See "Trailer Tire Monitoring" previously in this section.

- If a tire pressure is low, or a tire temperature is high, the color of the value turns amber
- If a sensor malfunctions, the values are dashed lines
- An alert appears when a trailer's tire pressure is low or when a trailer's tire temperature is high
- An alert appears when the trailer tires exceed their speed rating
- A notification appears on the infotainment screen when the age of the trailer tires exceeds the reminder time. Touch 'Tires are OK' to snooze the reminder for a period of time

Under the Tires view, touch to set up the Trailer Tire Pressure Monitoring System for the Trailer Profile. See "Trailer Tire Monitoring" previously in this section for details on the setup.

NOT FOR RESALE

- Touch Sensor Setup if the trailer tires were rotated or if the tire pressure sensors in the tires were replaced for this Trailer Profile. The vehicle needs to relearn the tire sensors and their locations. See "Trailer Tire Monitoring" previously in this section.
- Touch Alerts to view all active alerts. If the infotainment screen displays "Service Trailer Tire Pressure Monitoring System", the vehicle needs to be taken to a dealer for service.
- Touch Settings to view trailer tire monitoring settings.
- Touch Tire Speed Alert to turn on or off the tire speed alert.
- Touch Tire Age Reminder to turn on or off the tire age reminder.
- Touch Target Tire Pressure to change the recommended tire pressure for the trailer's tires. This changes the number at which the vehicle displays alerts related to trailer tire pressure.

Maintenance

On the Status view, touch the tools icon to access a list of maintenance reminders for the Trailer Profile.

The Maintenance Status view displays reminders for the Trailer Profile.

- Touch a reminder to view, reset, delete or edit it.
- Resetting a reminder resets the time and mileage values for the reminder.
  - The progress bar for each reminder fills as mileage or time accumulates.
  - The progress bar turns yellow when it reaches 90% and turns red when it reaches 100%.
- Touch New Reminder to add a new maintenance reminder.
  - Suggested reminders that have been previously set do not appear.
  - Suggested reminders that have not been set have empty boxes next to them.
  - The maximum number of reminders is 50.

Maintenance Notifications

- Touch Reset to reset the time and mileage values for the reminder.
- Touch Remind Me Later to delay the reminder.
  - If an Upcoming Alert (90%) is dismissed it does not appear again.
  - If a Maintenance Due Alert (100%) is dismissed it appears when the vehicle is turned off and back on again.

Maintenance Notification Settings

Touch Maintenance Notifications to turn on or off notifications for the selected profile. These notifications are based on the Trailer Profile. The maintenance notification settings for each Trailer Profile must be turned on or off.

All maintenance notifications display on the infotainment screen for that active Trailer Profile when the setting is on.

Always follow all of the maintenance instructions that came with your trailer.

Cameras

- Touch the camera view icon to open the selected view in the camera app.
- Close the camera app to return to the Trailering App.

NOT FOR RESALE

Checklists

On the Status view, touch the checklist icon to access a checklist for the trailer profile.

This view shows the recommended steps to take before towing a trailer.

- Touch the box next to each item if that step has been completed.
- Touch ⓘ to access a detailed view of each step.
- Within each detailed view, touch Next and Back to navigate between steps.
- Touch Clear All to clear all selected boxes in the current checklist.

Custom Checklist Items

For each of the Trailer Profile checklists, there is an option to create custom items to view in the checklist. Custom checklist items are displayed at the end of the default checklist items.

Guest Trailer and No Trailer Connected

If the Guest Trailer Profile is active or if no trailer is connected, this view shows the default checklist.

Weight

- Touch to turn on or off the Gross Combined Weight Alerts.
- When on, an amber alert can display in the Driver Information Center when the estimated weight of the vehicle and trailer combined may exceed the vehicle's Gross Combined Weight Rating.
- A separate red alert can display when the estimated weight of the vehicle and trailer combined was determined to exceed the vehicle's Gross Combined Weight Rating.
- For more information on Gross Combined Weight Alert, see *Trailer Towing* ⇨ *5*.

Brakes

If equipped with Integrated Trailer Brake Controller system and if the connected trailer is equipped with electric brakes or electric over hydraulic brakes, this view displays the current state of the brakes including brake gain setting and output. If no electric brakes are detected or if no trailer is connected, this view displays the last known brake gain setting and the output shows dashed lines.

- Touch Add to Driver Display to show trailer brake gain and output in the Driver Information Center
- Touch How to Set Gain to view detailed steps to set trailer brake gain

The Trailering App shows any brake issue reported by the trailer brake controller in the Brakes view. Trailer diagnosis and service may be required. Repair your trailer brakes if needed. A trailer braking issue is not covered by your GM warranty.

See "Integrated Trailer Brake Control System" section under *Towing Equipment* ⇨ *9*.

Boat Ramp Assist

This view is only available if the Guest Trailer profile is selected, or a user-created trailer profile for a boat is selected.

Touch Status to view the status of the vehicle in preparation for boat launch or retrieval.

Touch Tutorials to view instructions on launching or retrieving a boat.

Touch Checklists to view the recommended steps to take before launching or retrieving a boat.

NOT FOR RESALE

Guest Trailer Status View

If the Guest Trailer Profile is active, the status view shows.

- Lights
- Cameras, (if equipped)
- Checklist
- Weight
- Brakes (if equipped)
- Boat Ramp Assist

The Trailer Status view displays mileage and fuel economy information. The mileage and fuel economy values reset after the trailer disconnects.

Accessory/No Trailer Status View

If the Accessory/No Trailer profile is active, trailer status information is not available.

Trailers View

Touch the trailer profile icon in the Status view to view, activate, create, edit, or delete Trailer Profiles.

If a trailer is connected, touch the Trailer Profile name to activate a Trailer Profile.

The Trailering App can save a maximum of five custom trailer profile.

The Custom Trailer Profiles and Guest Trailer are in order of the most frequently used. The Accessory/No Trailer profile is shown below the Custom Trailer Profiles and Guest Trailer Profile.

Guest Trailer

If the Guest Trailer Profile is the active Trailer Profile, trailer detection, light/connections status, theft, and the Tow/Haul reminder alerts can be sent. The app does not track total mileage or fuel economy, but it tracks trip mileage and fuel economy if the Guest Trailer Profile is active. The Trailer Tire Pressure Monitoring System or maintenance reminders cannot be set up for a Guest Trailer Profile. The Guest Trailer Profile cannot be edited.

Touch ⓘ to learn more about the Guest Trailer option.

Accessory/No Trailer

If the Accessory/No Trailer Profile is active, alerts are not sent and the app will not track mileage. The Trailer Tire Pressure Monitoring System or maintenance reminders cannot be set up for the Accessory/No Trailer Profile. The Accessory/No Trailer profile cannot be edited.

No Trailer Connected

When there is no trailer connected, Trailer Profiles cannot be activated but most options can be edited.

Trailer Brake Gain Memory

The app can store the brake gain setting of a Trailer Profile or the Guest Trailer Profile. When a Trailer Profile or Guest Trailer Profile is selected, and a brake gain setting is set for that Trailer Profile, the app recalls the stored brake gain value.

- If a Trailer Profile is already active and the brake gain setting had been set for that Trailer Profile, the app recalls the stored brake gain value whenever the vehicle is turned on.
- If there was an error in setting the brake gain for a Trailer Profile, there is a notification. This pop-up does not appear if the Guest Trailer Profile is active or if there is no trailer connected.

NOT FOR RESALE

Trailer brake gain should be set for a specific trailering condition and must be adjusted anytime vehicle loading, trailer loading, or road surface conditions change.

Editing a Trailer Profile

Touch to edit any of the following options in the Trailer Profile view.

- Trailer Name
- Towing Mileage
- Average Fuel Economy
- Set as Default Trailer
- Camera Feature Settings
- Gross Combined Weight Alert
- Tow/Haul Mode Reminder Alert
- Theft Alert
- Delete/Remove Trailer

Trailer Name

Touch to edit the Trailer Profile's name. Use at least one character and no spaces. Touch Save.

Total Mileage

- Touch to edit the Trailer Profile's mileage.
- Touch Reset to reset trailer mileage to zero, or enter a new value and touch Save.

Effect on Maintenance Reminders

If the mileage is reset or changed, and mileage has already accumulated, any maintenance reminders that have been set up will be adjusted accordingly.

Average Fuel Economy

Touch to reset the average fuel economy for the trailer profile. Touch Reset to reset fuel economy.

Delete/Remove Trailer

Touch to remove the Trailer Profile and all of its settings from the vehicle.

Remove is displayed if there is a connected OnStar plan active with the vehicle. Removing a trailer profile removes the profile from the vehicle but the profile is still associated with the user account.

- On the pop-up, touch Remove to remove the Trailer Profile from the vehicle.
- Touch Cancel to dismiss the pop-up and return to the previous view.

Delete is displayed if there is not a connected OnStar plan. Deleting a trailer profile removes the profile from the vehicle and deletes it permanently.

Set as Default Trailer

Touch Set as Default Trailer to select the current profile as the default trailer profile.

The default Trailer profile automatically activates each time a new connection is detected. The Trailer Detection Alert will no longer appear on the infotainment screen.

If this setting is turned off, the current trailer profile is not the default trailer.

Camera Feature Settings

Select Camera Views and Guides to access specific view settings.

- Touch Jack-Knife Alert to turn on/off Jack-Knife Alerts. Turn this setting off to not receive Jack-Knife Alerts.
- Touch Turn Signal Activated View to turn on/off the view. Turn this setting on to see a side view of your vehicle when signaling a turn.

NOT FOR RESALE

- Touch Trailer Length Indicator to turn on/off the trailer length indicator. Turn this setting off to hide the overlay that represents the length of the trailer.

Gross Combined Weight Alerts

Touch Gross Combined Weight Alert to enable/disable Gross Combined Weight Alerts for the selected profile. These alerts are based on the Trailer Profile, so the settings for each Trailer Profile must be turned on or off.

Turn this setting off to stop receiving Gross Combined Weight Alerts when that Trailer Profile is active.

Theft Alert

If Theft Alerts are enabled, an alarm will sound anytime the trailer is disconnected from the vehicle while the vehicle is off.

Touch Theft Alert to enable/disable Theft Alerts for the selected profile. These alerts are based on the Trailer Profile, so the settings for each Trailer Profile must be turned on or off.

A smartphone receives a notification that the trailer related to the selected Trailer Profile is disconnected from the vehicle, if the setting is on for the active Trailer Profile, the vehicle has an OnStar or connected service plan and the smartphone number has been added to the account for this notification.

If the setting is turned off for a given Trailer Profile, the smartphone will not receive this security notification even if the Trailer Profile is active.

Tow/Haul Mode Reminder

When the vehicle detects a new trailer connection, and if the Tow/Haul Mode Reminder settings is enabled, a courtesy message displays reminding you to turn on Tow/Haul mode if appropriate. See your owner's manual.

Touch Tow/Haul Mode Reminder to turn on/off reminders for the selected profile. Tow/Haul Mode reminders are specific to each trailer profile, so the settings for each Trailer Profile must be turned on or off.

- If Tow/Haul Mode is off and Tow/Haul Mode Reminder is on for a Trailer Profile, a reminder to turn on Tow/Haul Mode appears each time the vehicle is turned on and the Trailer Profile is active.
- If Tow/Haul Mode is on and Tow/Haul Mode Reminder is on for a Trailer Profile, the reminder does not appear when the Trailer Profile is active.

This setting will default to OFF for each Trailer Profile, including the Guest Trailer Profile.

If Tow/Haul Mode is off and this setting is on for a Trailer Profile, each time the vehicle is turned on a reminder will appear to turn on Tow/Haul Mode when the Trailer Profile is active.

If Tow/Haul Mode is on and this setting is on for a Trailer Profile, the reminder will not appear when the Trailer Profile is active.

Trailering Surround Vision System

If equipped, the system shows multiple views in the infotainment display using five cameras mounted around the vehicle and up to two additional accessory cameras that can be mounted on or in a trailer. This feature provides additional views to aid in trailering/towing. The front camera is in the grille under the front emblem, the side cameras are on the bottom of the outside mirrors, the rear camera is in the tailgate handle and the bed camera is mounted on the rear of the cab.

NOT FOR RESALE

Additionally, up to two accessory cameras can be mounted to the rear and/or interior of the trailer. See your dealer for accessory trailer cameras. To access, touch CAMERA on the infotainment display or shift to R (Reverse). To return to the previous screen when not in R (Reverse), touch the Home or Back buttons on the infotainment display.

Certain trailer views require a compatible trailer profile be configured and selected. A compatible trailer is a box type trailer (cargo, camper, etc.) with a conventional hitch.

1. Transparent Trailer View

   Displays a view that allows the driver to virtually "see through" the trailer. This feature is available when a compatible trailer is connected, a valid profile is selected, and the vehicle is not in R (Reverse). The feature requires user installation of an accessory trailer camera on the rear exterior surface of the trailer per the accessory trailer camera installation instructions. See your dealer for accessory trailer cameras and information. To view, select Transparent Trailer View on the infotainment display when the Camera App is active. The view can be closed by selecting X, Home, or Back on the infotainment display.

   In order to calibrate the system, a minimum clearance of 61 cm (24 in) behind the Rear Vision Camera (RVC) is required. When the system is calibrated and trailer position is known, one of three views will be shown; Transparent Trailer View, Left Transparent Trailer View, or Right Transparent Trailer View. The Transparent Trailer View is shown when the position of the trailer is relatively straight behind the vehicle. The Left or Right Transparent Trailer view is shown when the position of the trailer is too far to the left or right. When the system is not calibrated, or the trailer position is not known, the Transparent Trailer Picture-in-Picture View will be shown.

   For 5th Wheel and Gooseneck trailers, the size of the image overlaid on the face of the trailer can be adjusted by pressing + or – on the infotainment display.

2. Rear Trailer Views

   - Rear Trailer View

     Displays a view of the area behind the trailer when a trailer is connected. The feature requires user installation of an accessory trailer camera on the rear exterior surface of the trailer per the accessory trailer camera installation instructions. See your dealer for accessory trailer cameras and information. To view, select Rear Trailer View on the infotainment display when the camera app is active. The view can be closed by selecting X, Home, or Back on the infotainment display.

   - Trailer Tow Mirror View

     Displays a rearward split view of the left and right sides of the vehicle and trailer, when a trailer is connected. The view will automatically pan to show more of the left or right side based on the position of the trailer when a compatible profile is configured and selected. To view, select Trailer Tow Mirror View on the infotainment display when a camera

NOT FOR RESALE

view is active. The view can be closed by selecting X, Home, or Back on the infotainment display.

- Picture-in-Picture Side View

  Displays a rearward split view of the left and right sides of the vehicle and trailer with an overlay view of the area behind the trailer when a trailer is connected. The feature requires user installation of an accessory trailer camera on the rear exterior surface of the trailer per the accessory trailer camera installation instructions. See your dealer for accessory trailer cameras and information. To view, select Picture-in-Picture Side View on the infotainment display when a camera view is active. The view can be closed by selecting X, Home, or Back on the infotainment display.

3. Interior Trailer View

   Displays a view of the interior of the trailer. The feature is available when a trailer is connected. The feature requires user installation of an accessory trailer camera on the interior of the trailer per the accessory trailer camera installation instructions. See your dealer for accessory trailer cameras and information. To view, select Interior Trailer View on the infotainment display when the Camera App is active. To access this view when in a forward gear above 12 km/h (8 mph), select CAMERA on the infotainment display and select Interior Trailer View. The view will close after 8 seconds and can be closed early by selecting X, Home, or Back.

Additional Views and Alerts

- Turn Signal Activated Views

  Displays a rearward view of the left or right side of the vehicle and trailer when a trailer is connected. Views are provided based on turn signal activation with the right-side view being shown when the right turn signal is active and the left side view being shown when the left turn signal is active. The feature can be enabled or disabled. To view available settings from the infotainment screen, touch Settings > Vehicle > Collision/Detection Systems. The view can be closed early by selecting X, Home, or Back.

  A Trailer Length Indicator Overlay is available in the Turn Signal Activated Views when the trailer is relatively straight behind the vehicle and a compatible profile is configured and selected via the Trailering App. The overlay will not be visible when the position of the trailer is too far to the left or right. The overlay can be enabled or disabled. To view available settings from the infotainment screen, touch Settings > Vehicle > Collision/Detection Systems.

- Jack-Knife Detection and Alert

  The vehicle may be equipped with Jack-Knife Detection. The system will track the position of the trailer relative to the vehicle. As the front of the trailer approaches the rear of the vehicle, a warning or an alert will be displayed. A warning indicates to the driver to proceed with caution, an alert indicates that a collision is imminent. Based on vehicle equipment and user settings, the visual warning or alert may be accompanied by audible or safety alert seat notifications. To view available settings from the infotainment screen, touch Settings > Vehicle > Collision/Detection Systems. This feature only works with conventional box type trailers.

NOT FOR RESALE

- Trailer Angle Indicator

  The vehicle may be equipped with a Trailer Angle Indicator. The Trailer Angle Indicator gives the driver a visual representation of the trailer's position relative to the vehicle. Available only in R (Reverse), Guidelines On, or Rear Trailering Views.

- When driving Off-Road the system will allow camera usage at higher speeds to improve safety and awareness. To activate place the vehicle drive mode in Off-Road. In this mode all Camera Views in the infotainment display will be available at higher speeds. This feature only works with conventional box type trailers.

Troubleshooting

The Trailer Camera calibration may take longer than expected or not calibrate if:

- The vehicle is driven too fast during calibration. Maintain speeds below 50 km/h (31 mph).
- The vehicle is not driven straight during calibration. Steering should be maintained as straight as possible. Excessive Steering during calibration may extend calibration time.
- The calibration is attempted in low light. Calibration should be attempted when there is enough light.
- The calibration is attempted during adverse weather conditions. Calibration during conditions such as snow or heavy rain should be avoided.
- The road surface is not ideal for calibration. Calibration should be attempted on an alternate road surface.
- The accessory trailer cameras are swapped at the hitch connector. Ensure that the camera mounted to the rear of the trailer is connected to the rear trailer camera input.
- The accessory trailer camera is mounted, angled, or rotated outside of the defined mounting location (see camera installation instructions).
- The vehicle or accessory trailer camera is obstructed by dirt or debris. Check cameras and clean as needed.
- The accessory trailer camera is mounted such that obstructions are visible in the view (spare tire, bike/cargo racks, etc.). Calibration should be attempted with obstruction temporarily removed. Shadows resulting from driving toward the sun may be perceived as obstructions. Attempt to calibrate driving in an alternate direction if possible.
- The entered trailer profile dimensions are inaccurate. Measurements are expected to be made to the nearest centimeter or inch. Enter accurate measurements and reattempt calibration.

Distortion may be observed in a rear trailer camera view if:

- The accessory trailer camera is mounted, angled or rotated outside of the defined mounting location. See your dealer. Road markings are necessary for calibrating the cameras. The cameras may need to turn off and on again to store the calibration.
- The entered trailer profile dimensions are inaccurate. Measurements are expected to be made to the nearest centimeter or inch. Enter accurate measurements and reattempt calibration.

NOT FOR RESALE

The Transparent Trailer image is not the right size:

- The size of the image overlaid on the face of the trailer may be too large or too small if the measurements input in the Trailering App are not accurate. See *Trailering App* ⇨ *19* for details on how to take measurements.
- The bed hitch transparent trailer view is optimized for trailers of federally mandated maximum width. Trailers that exceed the maximum width, or are too close to the cab, may not be optimized.

The preview may not be provided or the wrong preview may be provided if:

- The accessory cameras are not recognized. Ensure that the accessory camera(s) are connected and restart the vehicle.
- The accessory trailer cameras are swapped at the hitch connector. Ensure that the accessory camera(s) are connected to the correct input.
- The accessory trailer camera(s) are not installed according to the installation instructions.

A feature may be unavailable or not activating as expected if:

- The trailer is not compatible.
- The customization is disabled. Check the customization settings where applicable.
- The accessory trailer cameras are swapped at the hitch connector. Ensure that the accessory camera(s) are connected to the correct camera input.
- A trailer profile is not configured and selected.
- The entered trailer profile dimensions are inaccurate. Measurements are expected to be made to the nearest centimeter or inch. Enter accurate measurements and reattempt calibration.
- The trailer position is not known. Drive straight forward to learn trailer position.
- The rear vehicle camera is obstructed by dirt or debris. Check cameras and clean as needed.
- The accessory trailer cameras were plugged in when the vehicle was running. Prior to plugging in the trailer camera, the vehicle needs to be off with all doors closed for at least five minutes.

An unexpected view may display when:

- During the initial portions of the drive, Transparent Trailer Degraded may be displayed until truck or trailer articulation angle can be calculated. Once calculated, the expected transparent trailer view will be displayed.

Certain viewing features may experience degraded performance if:

- The entered trailer profile dimensions are inaccurate. Measurements are expected to be made to the nearest centimeter or inch. Enter accurate measurements and reattempt calibration.
- The rear vehicle camera is obstructed by dirt or debris. Check cameras and clean as needed.

For trailers with outboard wheels:

- Performance for Transparent Trailer and Jack Knife Detection are optimized when the entered value for trailer width reflects the width of the box of the trailer. If total width is entered:
    - The inlayed camera view in Transparent Trailer View may appear wider than the trailer face.

NOT FOR RESALE

- The rear vehicle camera is obstructed by dirt or debris. Check cameras and clean as needed.
- Jack Knife Detection alerts may activate prematurely.
- Performance for Transparent Trailer and Jack Knife Detection are optimized when the entered value for trailer width reflects the width of the box of the trailer. If total width is entered:
  - The inlayed camera view in Transparent Trailer View may appear wider than the trailer face.
  - Jack Knife Detection alerts may activate prematurely.
- Performance for Rear Trailer Guidance Lines and Trailer Length Indicator Overlays are optimized when the entered value for trailer width reflects the total width of the trailer including outboard wheels. If the trailer box width is entered:
  - The Rear Trailer Guidance Lines will appear narrower than the actual path of the trailer.
  - The Trailer Length Indicator Overlays will appear closer and possibly overlap with the trailer.

Trailer Tire Pressure Monitoring Operation

If equipped, the Trailer Tire Pressure Monitoring System is designed to monitor the pressure and temperature of the trailer tires and warn the driver when a low pressure or high temperature condition exists. Sensors are purchased from the dealer as an accessory, with the system accommodating a trailer with up to six tires. Also, the system can be paired with up to five individual trailers.

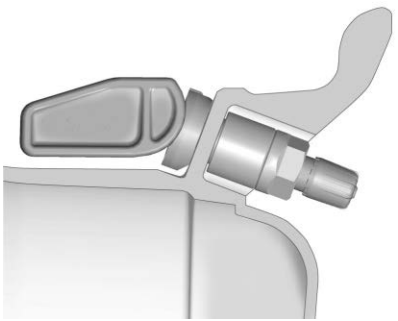

Contact your trailer service center or tire service center to have the pressure sensors installed inside the trailer tires. The technician should insert the sensor stem through the hole in the trailer wheel. When the sensor is correctly positioned, the nut on the sensor stem should be tightened to 8 N•m (6 lb ft). When mounting the trailer tire onto the trailer wheel be careful not to damage the sensor.

The Trailering App can be used to view the tire pressures after the recommended trailer tire pressures have been entered. Refer to the trailer tire placard on the trailer or the trailer tire sidewall for the recommended tire pressure.

The system is compatible with trailer tires that have placard pressure values from 103–1013 kpa (15–147 psi). The hole in the wheel for the tire stem must be 11.43 mm (0.453 in) in diameter. Use of the pressure sensors on a wheel with a different stem hole size could result in loss of air from the tire.

If a low trailer tire pressure condition is detected, the system displays a warning message on the Driver Information Center. If the warning message is displayed, stop

NOT FOR RESALE

as soon as possible and inflate the tires to the recommended pressure shown on the tire placard on the trailer.

In addition, the system monitors the temperature of the trailer tires. If the system detects a high temperature on one or more of the trailer tires, a warning message will be displayed on the Driver Information Center. If this warning message is displayed, stop as soon as possible, and inspect the overheated trailer tire. Common causes for high trailer tire temperature are underinflation, overloading, or tire damage.

Trailer Tire Pressure Monitoring System Malfunction Message

The Trailer Tire Pressure Monitoring System will not function properly if one or more of the trailer tire sensors are missing or inoperable. If the system detects a malfunction, a Driver Information Center message indicates that the system requires service. Some of the conditions that can cause the service message to occur are:

- One of the trailer tires has been replaced with the spare tire which does not have a learned system sensor. The Driver Information Center message should turn off after the pressure sensor is installed in the tire, and the learning process is performed successfully. See *Trailering App* ⇨ *19*.
- The Trailer Tire Pressure Monitoring System sensor learning process was not done or not completed successfully. The Driver Information Center message should go off after successfully completing the sensor learning process. See *Trailering App* ⇨ *19*.
- One or more system sensors are missing or damaged. The Driver Information Center message should go off when the sensors are installed and the sensor learning process is performed successfully. See *Trailering App* ⇨ *19*.
- Operating electronic devices or being near facilities using radio wave frequencies similar to the Trailer Tire Pressure Monitoring System could cause interference to the system which could cause loss of signal reception from the sensor.
- If the system does not receive the signal from an individual sensor, an error message may not occur until the vehicle has been driven for a period of time.

If the system is not functioning properly, it cannot detect or signal a low tire condition. See your dealer for service if the Driver Information Center message comes on and stays on when the trailer tire pressures have been checked and determined to be correct.

Trailer Tire Fill Alert

If equipped, this feature provides visual and audible alerts outside the vehicle to help when inflating an underinflated tire to the recommended cold tire pressure.

The low tire pressure warning light must be on for this feature to be initiated. When the light comes on, follow these steps:

1. Park the vehicle in a safe, level place.
2. Set the parking brake.
3. Place the vehicle in P (Park).
4. Turn the vehicle off, and then back on.

NOT FOR RESALE

5. Add air to the tire that is underinflated. The turn signal light will flash.

   When the recommended pressure is reached, the horn sounds once and the turn signal light will stop flashing and briefly turn solid.

Repeat these steps for all underinflated tires that have illuminated the low tire pressure warning light.

⚠ Warning

Overinflating a tire could cause the tire to rupture and you or others could be injured. Do not exceed the maximum pressure listed on the trailer tire sidewall.

If the tire is overinflated by more than 35 kPa (5 psi), the horn will sound multiple times and the turn signal light will continue to flash for several seconds after filling stops. To release and correct the pressure, while the turn signal light is still flashing, briefly press the center of the valve stem. When the recommended pressure is reached, the horn sounds once.

If the turn signal light does not flash within 15 seconds after starting to inflate the tire, the tire fill alert has not been activated.

If the hazard warning flashers are on, the tire fill alert visual feedback will not work properly.

The Trailer Tire Fill Alert will not activate under the following conditions:

- There is interference from an external device or transmitter.
- The rate of air flow from the inflation device is not sufficient to activate the system.
- There is a malfunction in the Trailer Tire Pressure Monitoring System.
- There is a malfunction in the horn or turn signal lights.
- The tire pressure sensor identification code is not registered to the system.
- The tire pressure sensor battery is low.

If the tire fill alert feature is not working, use a tire pressure gauge to confirm tire pressure.

NOT FOR RESALE

Index

A

Apps
- Trailering..... 19

D

Driving
- Characteristics and Towing Tips..... 1

E

Equipment, Towing..... 9

G

General Information
- Towing..... 1

T

Towing
- Driving Characteristics..... 1
- Equipment..... 9
- General Information..... 1

Trailer
- Sway Control (TSC)..... 18
- Towing..... 5

Trailering
- App..... 19



27Escalade_Trailer_SUP_enUS_20561501A