bZ
2027



MULTIMEDIA
OWNER'S MANUAL

TOYOTA

©2026 TOYOTA MOTOR CORPORATION
All rights reserved. This material may not be reproduced or copied, in whole or in part, without the written permission of Toyota Motor Corporation.

Basic operation	Basic operation of multimedia system	1
Settings and registration	Registering and setting various features	2
Connecting a smartphone or communication device	Using Bluetooth® or Wi-Fi®	3
Navigation	Using the cloud navigation	4
Audio system	Listening to the radio and music	5
Hands-free calls	For hands-free cellular phone use	6
Connected Services	Operating the connected services	7
Parking assist system	Checking the situation around the vehicle	8
Appendix	Reference Information and certification	9
Index	Search alphabetically	

Introduction

For your information..... 7
Safety instructions 9
Reading this manual..... 10
Pictorial index..... 12

1 Basic operation

1-1. Basic operation of multimedia system

Display and control 14
Multimedia screen overview..... 16
Main menu..... 17
Status icons..... 19
Operating the touch screen..... 21
Basic screen function 24
Entering letters and numbers..... 26

1-2. Basic operation of navigation system

Map screen overview..... 27
Operating the map screen..... 28

1-3. Basic operation of audio system

Audio system ON/OFF and volume adjustment 31
Changing the audio source..... 33
Connecting a device via the USB Type-C port 34

1-4. Intelligent Assistant

Using the Intelligent Assistant system 35
Starting voice control..... 38
Speaking a voice command..... 40
Using the search function 44

2 Settings and registration

2-1. Multimedia system initial setup

Linking a User Profile 46

2-2. Various settings

Changing the various settings 52

2-3. Driver settings

Changing and linking a User Profile..... 54
Setting up how to identify a driver..... 56

2-4. General settings

Changing general multimedia system settings... 59

2-5. Notification settings

Notifications settings..... 62

2-6. Screen settings

Changing the screen display settings 64

2-7. Sound and media settings

Changing sound and media settings..... 66

2-8. Voice control settings

Changing the voice control settings..... 70

2-9. Vehicle settings

Setting dealer information 71

Changing the security settings 72

Updating and checking the software information 75

2-10. Navigation system settings

Displaying the navigation system settings screen .. 81

Changing the map details settings 82

Changing the route option settings 84

2-11. Wi-Fi® Settings

Changing Wi-Fi® setting .. 85

Setting Wi-Fi® Hotspot 87

2-12. Bluetooth® Settings

Setting Bluetooth® devices 89

2-13. Apps settings

Apps settings..... 93

3 Connecting a smartphone or communication device

3-1. Using the Bluetooth® function

Precautions when using Bluetooth® devices 96

Bluetooth® specifications and compatible profiles 99

Registering a Bluetooth® device from the multimedia system 100

Deleting a registered Bluetooth® device 104

Connecting with a Bluetooth® device..... 105

Setting a Bluetooth® device as a primary device..... 109

Setting a Bluetooth® device as a secondary device..... 110

3-2. Connecting to a Wi-Fi® network

Precautions when using Wi-Fi® devices 111

Connecting to a network using Wi-Fi® 114

Establishing a connection to Wi-Fi® Hotspot .. 117

3-3. Using Apple CarPlay and Android Auto

Precautions when using Apple CarPlay and Android Auto 120

Using Apple CarPlay with an unregistered smartphone 123

Using Apple CarPlay with a registered smartphone..... 126

Using Android Auto with an unregistered smartphone..... 129

Using Android Auto with a registered smartphone 132
When Apple CarPlay or Android Auto might be malfunctioning 135

4 Navigation

4-1. Navigation

Cloud navigation 142

4-2. Map information

Map options screen 143
Information displayed on the map screen 144

4-3. Searching for a destination

Destination search screen 145
Destination search result list screen 148
POI suggestion 149
Destination Assist 150

4-4. Starting route guidance

Starting route guidance . 152
Full route map screen 153

4-5. Route guidance screen

Route guidance screen . 155
Typical voice guidance prompts 159

5 Audio system

5-1. Radio operation

Listening to the radio 162
Troubleshooting guide ... 165
Refer to the table below to identify the problem and take the suggested corrective action 166

5-2. USB flash drive operation

Playing music files on a USB flash drive 167
Precautions for playback of USB flash drive 169

5-3. iPod/iPhone operation

Playing iPod/iPhone 171
Precautions for playback of iPod/iPhone 173

5-4. Apple CarPlay operation

Playing Apple CarPlay ... 174
Precautions for playback of Apple CarPlay 176

5-5. Android Auto operation

Playing Android Auto 177
Precautions for playback of Android Auto 179

5-6. Bluetooth® audio operation

Playing Bluetooth® audio 180
Precautions for Bluetooth® audio playback . 183

5-7. Integrated Streaming

Playing Integrated Streaming 185

6 Hands-free calls

6-1. Precautions when using hands-free calls

Precautions for hands-free calling 188

When hands-free calling might be malfunctioning 192

6-2. Operating hands-free calls with the steering switches

Operating with the steering switches.....197

6-3. How to make calls

Making calls from call history 199

Making calls from the favorites list 200

Making calls from contacts 201

Making calls from keypad 202

6-4. How to receive calls

Answering calls 203

Declining calls 205

6-5. In-call operations

Performing operations from the call screen 206

Answering a second call208

Making a call to another party during an ongoing call.....209

Making conference calls210

Ending calls.....211

6-6. Changing phones for hands-free calls

Switching phones for hands-free calls.....212

6-7. Editing contact data

Transferring contact data 214

6-8. How to use the message function

Precautions when using the message function ..216

Making calls from the message function.....220

7 Connected Services

7-1. Connected Services overview

Functional overview.....222

Type A: Function achieved by using DCM and the system.....224

Type B: Function achieved by using DCM 225

Type C: Function achieved by using DCM and a smartphone.....227

8 Parking assist system

8-1. Toyota parking assist monitor

Toyota parking assist monitor functions 230

Displaying the guide screen.....232

Changing the guide line display mode 234

Toyota parking assist monitor.....240

8-2. Panoramic view monitor

Panoramic view monitor functions 250

Display mode when the shift position is in "P" ...253

Display mode when the shift position is in "D" or "N" 255
Display mode when the shift position is in "R" ... 264
The screen when the outside rear view mirrors are folded 272
Zooming in on the screen 273
Displaying transparent underfloor vision 274
Moving object alert 276
Changing the panoramic view monitor settings ... 278
Precautions for the panoramic view monitor 280

9 Appendix

9-1. Appendix

Information about media and data 300
HD Radio™/SiriusXM® Satellite Radio 311
Certification 315

Index 319

For your information

Multimedia system owner's manual

- This manual describes the operation of the multimedia system. Please read this manual and the vehicle "OWNER'S MANUAL" carefully to ensure proper use.
- Please be aware that the content of this manual may be different from the system in some cases, such as due to software updates and changes to specifications.
- This manual contains information related to system software Ver.2222 and earlier. For the latest information, refer to the following URL. Before using this system, be sure to read the information relating to the latest software version. For details of the current software version, see "Updating and checking the software information"(→ P.75).

  Depending on the country or area, the software update service may not be available.

Language		URL	QR code
U.S.A.	English	https://www.toyota.com/owners/resources/warranty-owners-manuals/manual?om=om42n44u.bz.2027.2607.bev.mm	
Canada	English	https://www.toyota.ca/toyota/owners/manual?om=om42n44u.bz.2027.2607.bev.mm	
	French	https://www.toyota.ca/toyota/owners/manual?om=om42n44d.bz.2027.2607.bev.mm	

- The screens shown in this manual may differ from the actual screen of the system depending on availability of functions, subscription status, and map data available at the time this manual was produced.
- The company names and products listed in this manual are trademarks and/or registered trademarks of their respective companies.

Disclaimer about data compensation

This system saves data onto the internal memory. Data saved in the memory may become corrupted or lost due to system failure, repair, malfunction, bugs, or other causes.

Please note that Toyota Motor Corporation takes no responsibility whatsoever for direct and/or indirect damage, and offers no compensation for data if the data that was saved in the internal memory could not be saved properly.

NOTICE TO QUEBEC CONSUMERS

Toyota Canada Inc. is pleased to offer a 36 month / 60,000 km (whichever occurs first) limited new-vehicle warranty on your vehicle. This limited warranty covers repairs on any part of the vehicle supplied by Toyota Canada that is defective in material or workmanship, subject to certain exceptions that are stated in your warranty manual. For more details of the warranty, check the Owner's Manual Supplement included with your vehicle, or visit toyota.ca.
Quebec's Consumer Protection Act requires Toyota Canada to disclose whether we guarantee the availability of replacement parts, repair services, and information necessary to maintain or repair the vehicle or its components. While Toyota Canada is pleased to honour the terms of our limited warranty, please note that Toyota in no way guarantees the availability of replacement parts, repair services and information necessary to maintain or repair the vehicle or its components.

Removal of the 12-volt battery

When the power switch is turned off, all data is saved in the system. If the 12-volt battery terminal is removed before the data is saved, the data may not be saved correctly.

Safety instructions

To use this system in the safest possible manner, follow all the safety tips shown below.

This system is intended to assist in reaching the destination and, if used properly, can do so. The driver is solely responsible for the safe operation of the vehicle and the safety of your passengers. Do not use any feature of this system to the extent it becomes a distraction and prevents safe driving. The first priority while driving should always be the safe operation of the vehicle. While driving, be sure to observe all traffic regulations. If a traffic sign on the road has been changed, route guidance may not have the updated information such as the direction of a one way street.

While driving, listen to the voice instructions as much as possible and glance at the screen briefly and only when it is safe. However, do not totally rely on voice guidance. Use it just for reference. If the system cannot determine the current position correctly, there is a possibility of incorrect or delayed guidance, or no voice guidance at all.

The data in the system may occasionally be incomplete. Road conditions, including driving restrictions (no left turns, street closures, etc.) frequently change. Therefore, before following any instructions from the system, look to see whether the instruction can be done safely and legally.

This system cannot warn about such things as the safety of an area, condition of streets, and availability of emergency services. If unsure about the safety of an area, do not drive into it. Under no circumstances is this system a substitute for the driver's personal judgement.

⚠ WARNING

- For safety, the driver should not operate the system while he/she is driving. Insufficient attention to the road and traffic may cause an accident.
- While driving, be sure to obey the traffic regulations and maintain awareness of the road conditions.

Reading this manual

Explains symbols used in this manual.

Symbols in this manual

Symbols	Meanings
	WARNING : Explains something that, if not obeyed, could cause death or serious injury to people.
	NOTICE : Explains something that, if not obeyed, could cause damage to or a malfunction in the vehicle or its equipment.
1 2 3...	Indicates operating or working procedures.
	INFORMATION : Explains something other than descriptions about operation methods and functions that you should know and are useful to know.

Symbols in illustrations

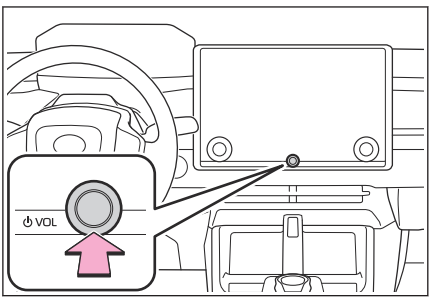

Symbols	Meanings
	Indicates the action (pushing, turning, etc.) used to operate buttons and other devices.

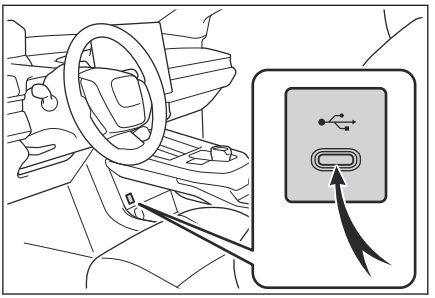

Symbols	Meanings
	Indicates the component or place being explained.

Pictorial index

Instrument panel

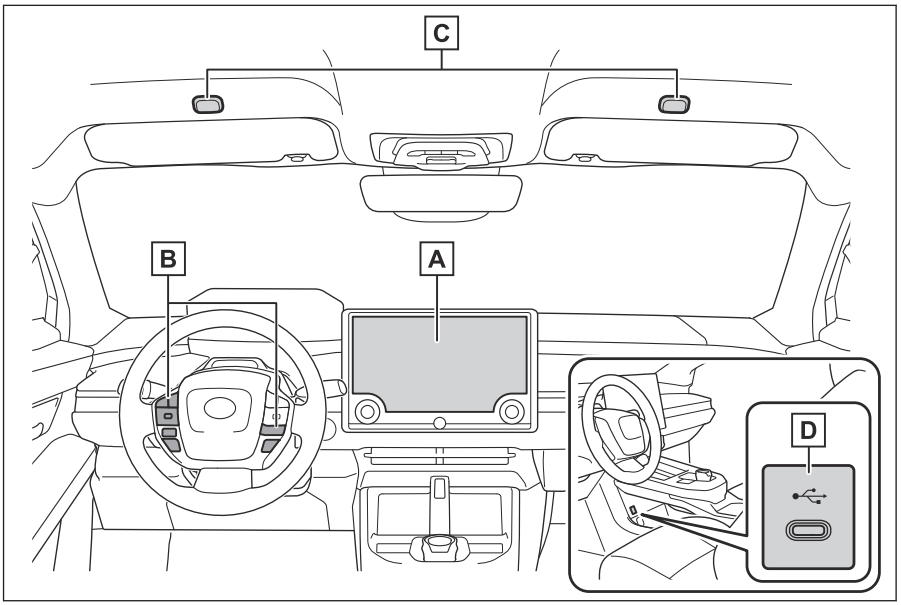

A **Display** **P.14**

B **Steering wheel switches**

Controlling audio P.31,33,161

Using the Intelligent Assistant system P.38

Making a phone call P.197

C **Microphones** **P.37**

D **USB Type-C port** **P.34**

1 Basic operation

1-1. Basic operation of multimedia system

Display and control 14

Multimedia screen overview.....16

Main menu 17

Status icons 19

Operating the touch screen 21

Basic screen function....24

Entering letters and numbers.....26

1-2. Basic operation of navigation system

Map screen overview....27

Operating the map screen 28

1-3. Basic operation of audio system

Audio system ON/OFF and volume adjustment.....31

Changing the audio source 33

Connecting a device via the USB Type-C port.....34

1-4. Intelligent Assistant

Using the Intelligent Assistant system.....35

Starting voice control 38

Speaking a voice command.....40

Using the search function 44

Display and control

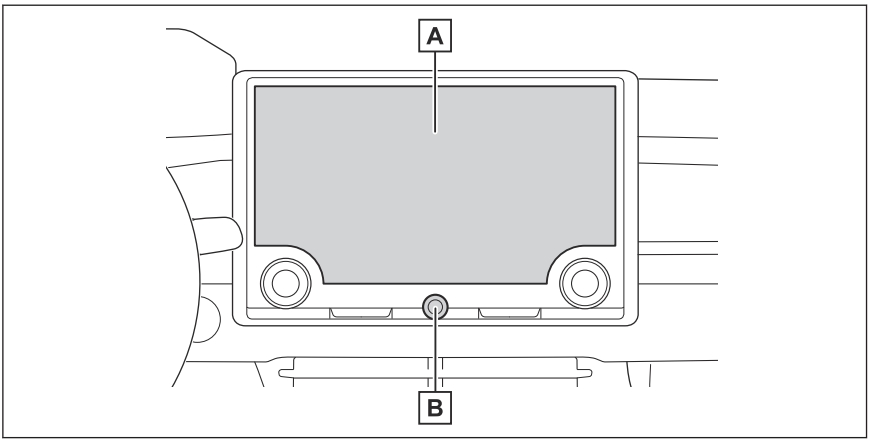

A Display

Operate the touch screen by directly touching it.

B [⏻ **VOL**] knob

Turn the audio on/off and adjust the volume.(→ P.31)

INFORMATION

- The LCD screen may look whitish or blackish depending on the surrounding condition used or the angle from which screen is looked.
- The screen may be difficult to see if sunlight or other external light hits the screen.
- The screen may appear dark or hard to see if you wear polarized sunglasses.

⚠ WARNING

For safety, the driver should operate the display as little as possible while driving and should stop the vehicle to operate the display. Operating the display while driving is dangerous such as mistakenly turning the steering wheel or other unforeseen accidents. Additionally, look at the display only as necessary and as briefly as possible when driving the vehicle.

⚠ NOTICE

Do not use the multimedia system for long periods of time with the EV system turned off. Doing so may deplete the 12-volt battery.

Restarting the system

When the system response is extremely slow, you can restart the system.

Press and hold the [⏻ **VOL**] knob for at least 3 seconds.

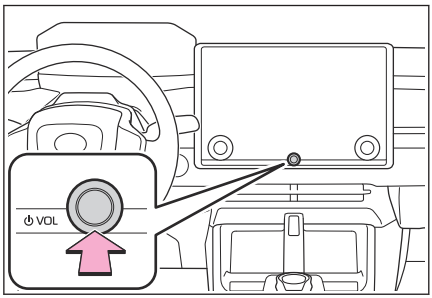

Multimedia screen overview

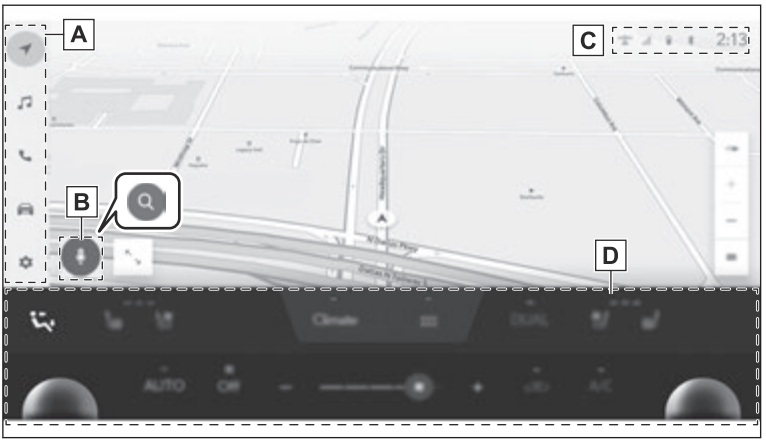

A Main menu

Changes the function to be displayed on the screen when an icon is touched.

B Voice search button

Displays the voice control screen enabling verbal operation of the navigation, audio and various other functions. The button will change depending on the situation.

: While driving

: When stopped

C Status icons

The clock and icons with information about communication statuses are displayed at the top of the screen.

D Climate control buttons

Operate the air conditioner and vehicle functions.*1

INFORMATION

Touch [ ] on the map screen to display the map in a larger size.

Related Links

Main menu(P. 17)

Starting voice control(P. 38)

Status icons(P. 19)

*1 :Refer to the vehicle "OWNER'S MANUAL".

Main menu

The function to be displayed on the screen can be changed by touching an icon.



: Apple CarPlay®

Displays the Apple CarPlay screen. The Apple CarPlay icon is displayed when a supported device connects to the system and the applicable function is enabled.(→ P.123,126)

: Android Auto™

Displays the Android Auto screen. The Android Auto icon is displayed when a supported device connects to the system and the applicable function is enabled.(→ P.129,132)

: Navigation

Displays the map screen. The navigation system can be operated to search for a destination or perform other navigation system-related tasks.(→ P.27,142)

: Audio

Displays the audio control screen. The desired source can be selected to play audio.(→ P.33,161)

: Phone

Displays the phone screen. A cellular phone connected via Bluetooth® can be used to make hands-free phone calls.(→ P.187)

: Vehicle information*1

Displays the vehicle information screen. Charging schedule can be set.

*1 : Refer to the vehicle "OWNER'S MANUAL"

 : Settings

Displays the settings screen. Multimedia system and vehicle equipment related settings can be changed.(→ P.52)

INFORMATION

The Apple CarPlay/Android Auto icons are displayed when a supported device connects to the system and the applicable function is enabled.

Status icons

The time and icons with information about communication statuses are displayed at the top of the screen.



4:12

Displays the current time. Touching the clock displays the date and time settings screen.

Displays the connection status of the cellular phone connected via Bluetooth®. Touching the icon displays the Bluetooth® settings screen.

Displays the reception level of the connected cellular phone.

Displays the remaining battery charge of the connected cellular phone.

Displays the reception status of the Data Communication Module (DCM).*1

Displays the Wi-Fi® reception level.

Displays the Wi-Fi® Hotspot connection status.*1

*1 : This function is not available in some regions.



Displayed when the intuitive parking assist is active.*



Displayed when a hands-free call was made while a screen other than the phone screen was being displayed.



Displays the operating status of the wireless charger.

INFORMATION

- The displayed remaining battery charge for the cellular phone may not match the display on the cellular phone. Additionally, the remaining battery charge may not be able to be displayed depending on the phone model.
- You may not be able to use Wi-Fi® if the reception level is poor.
- If you use your cellular phone in places or situations like the following, you may not be able to connect via Bluetooth®:
  - The cellular phone is behind or under a seat, or inside the console box
  - The cellular phone is touching or covered with metallic materials
- If the cellular phone is set to power saving mode, the Bluetoothconnection may automatically be disconnected. If that happens, disable power saving mode on the cellular phone.

Related Links

Changing general multimedia system settings(P. 59)

Setting Bluetooth® devices(P. 89)

* : If equipped

Operating the touch screen

Operate the touch screen by directly touching it with a finger.

■ Touch

Gently touch the screen. You can select items on the screen.

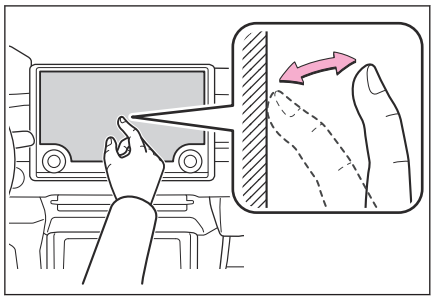

■ Drag

Move your finger while it is touching the screen. The list and map screens can be scrolled to the amount that the finger is moved.

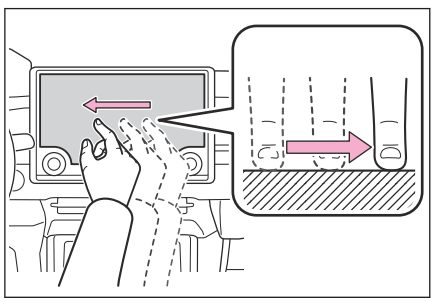

■ Flick

Quickly swipe your fingertip that touches the screen. The list and map screens are scrolled by larger amount than scrolls by dragging.

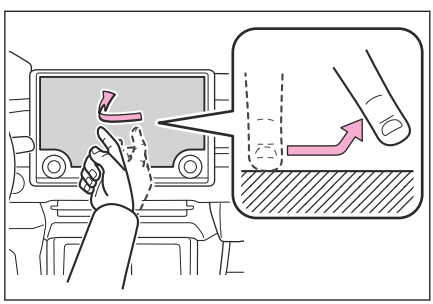

■ Pinch in/pinch out

Move two fingers in and out while touching the screen. You can zoom in and out on maps.

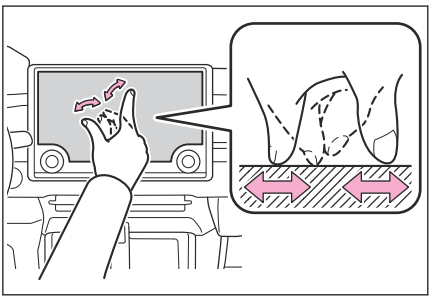

INFORMATION

- In order to operate some functions, it may be necessary to touch and hold or double tap (touch 2 times quickly) the screen.
- The sensitivity level when touching the screen can be changed.
- Response sound when the screen button is touched can be turned on/off.
- Flick operations may not work smoothly in high altitude areas.
- Operation of the screen is restricted while driving.

Related Links

Changing general multimedia system settings(P. 59)

Notes for operating the touch screen

INFORMATION

- If there is no response from the buttons on the screen, take your finger off the screen and try again.
- In the following situations, the screen buttons may not respond or malfunction:
  - If a glove is worn
  - If the screen is operated with a fingernail
  - If the screen is being touched with another finger or palm at the same time
  - Dirt or water is on the screen
  - If a plastic film or coating is on the screen

- If the vehicle is near a TV tower, power plant, filling station, broadcast station, large display, airport, or any other place from which strong radio waves or noise emanates
- When you are carrying or charging a portable wireless communication device, such as a radio or cellular phone, in the vehicle

● If the screen is touched or covered with a metallic object like one of the following, the screen buttons may not respond or malfunction:

- A card covered in metal such as aluminum foil
- A cigarette case that uses aluminum foil
- A wallet, purse, or bag with metallic parts
- Coins
- Media, such as CDs and DVDs, a USB cable, etc.

● If the system is started with a finger touching the screen, the screen buttons may not respond. Remove any fingers off the screen and try again. If the buttons are still not responding, turn off the power switch and restart the system.

● The Apple CarPlay map application does not support the pinch in/pinch out feature.

⚠ NOTICE

● To protect the screen, gently touch the screen with your finger when operating it.

● Do not operate the touch screen with anything other than your finger.

● Gently clean the screen with a glasses cleaning cloth or similar soft cloth. Touching the screen forcibly with your finger or a hard cloth may scratch the surface of the screen.

● Do not use benzine or an alkaline solution to clean the screen. Doing so may damage the screen.

● The screen surface may become hot depending on the conditions. If you keep touching it for a long time, it may cause low temperature burn.

Basic screen function

A list screen will be displayed if there are multiple candidates such as settings and audio. Scroll the list to select the desired item.

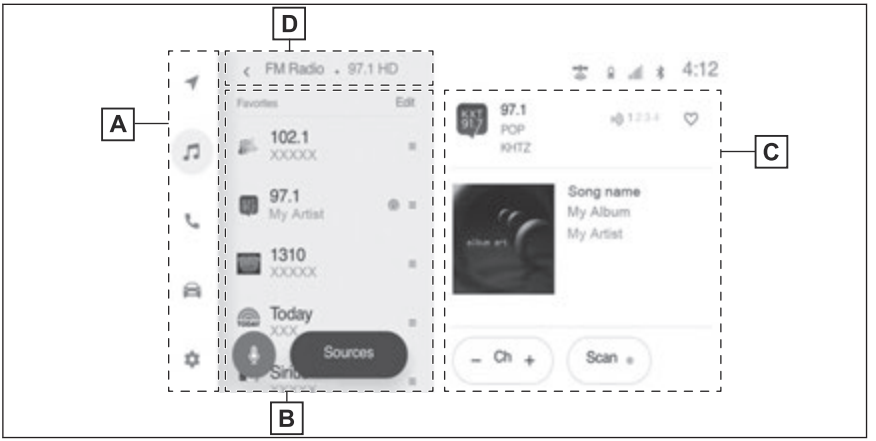

A Main menu

Changes the function to be displayed on the screen by touching an icon.

B Sub menu

Displays items on a list. Scrolling the list can be done by dragging or flicking the screen.

C Main area

Displays detailed information about the item you selected on the sub menu.

D Breadcrumb list

Displays screen titles in a hierarchy. Touching **[<]** returns to the hierarchy one level up.

INFORMATION

Operation of the screen is restricted while driving.

■ Searching a list

Touching text in an index displays the desired item from the list.

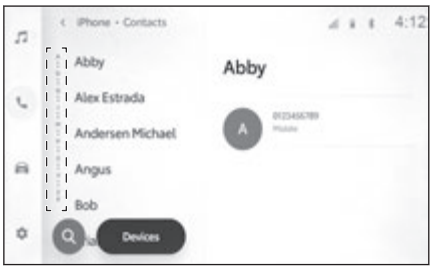

■ Turning the settings on or off

Touching an item turns the setting on or off.

: On

: Off

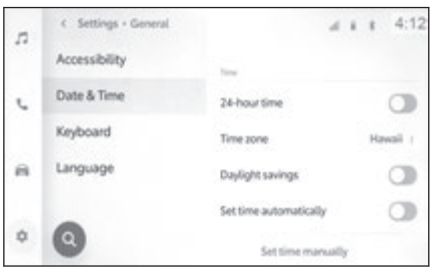

■ Multiple setting options

Touching an item that has [⋮] to it enables you to select an item from multiple options.



■ Adjusting the level

Dragging the slider enables the level of the setting to be adjusted.

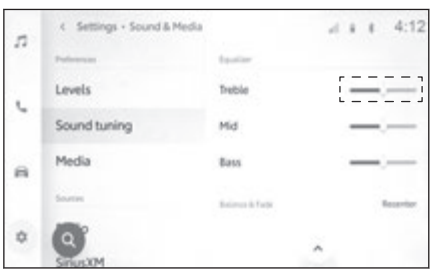

Related Links

Main menu(P. 17)

Entering letters and numbers

Letters and numbers can be entered by using the keyboard. Entering letters displays predictive text.

▶ **Screen example**



: Closes the keyboard and returns to the previous screen.

: Deletes one character.

: Switches the keyboard.

: Toggles between uppercase and lowercase.

[**Go**] : Perform search based on input text.

: Closes the keyboard.

123 : Changes to the numbers and symbols input mode.

ABC : Changes to the alphabet text input mode.

INFORMATION

- The displayed keyboard type differs depending on the feature.
- Double tap [ ] to fix the letters to uppercase for input.

Map screen overview

To display the map screen, touch [ ] on the main menu.



A Speed limit icon

Displays the speed limit of the road being driven on.

B Orientation mark

Displays the orientation of the map. Touch to change the orientation of the map.

C Zoom in/out buttons

Increase/reduce the map scale.

D Map options button

Displays the map options screen.

E Current position icon

Displays the current position and orientation of the vehicle. Touch to display detailed information about the current position. Also, touch to share the current position of the vehicle.

F Voice search button

Displays the voice control screen.

Related Links

Map orientation(P. 28)
Map scale(P. 28)
Current position(P. 28)
Searching for a destination using voice control(P. 147)

Operating the map screen

This section explains the basic operations relating to the map display, such as the current position display and scrolling the map.

Current position

Touch [ ] to display detailed information about the current position.

[**Share location**] : Shares the vehicle's current position with a registered contact.

To use this function, a smartphone must be connected to the multimedia system.



Map scale

Touch [+] or [−] to change the scale of the map screen.



INFORMATION

- Pinch out on the screen to zoom in and pinch in to zoom out.
- Double tapping with 1 finger can also be used to zoom in. Double tapping with 2 fingers can be used to zoom out.
- Can also two finger tilt to change to 3D and back to 2D.

Map orientation

Touch [ ] to change the orientation of the map screen between north up, heading up, and 3D heading up.

[N] : North up icon

The map is always displayed with north up, regardless of the direction travel of the vehicle.

[ ]: Heading up icon

The map is always displayed with the direction of travel during an active route navigation.

[ ]: 3D Heading up icon

Displays a 3D map. The map is always displayed with the direction of travel during an active route navigation.

Map scrolling operation

The map can be moved and a selected point can be set as the center of the map screen.

Flick/drag operation

The map screen can be moved by touching, dragging or flicking it.

Touch [**Recenter**] to return to the center of the map to the current position.



Touch and hold operation

If a desired point on the map screen is touched and held, the full route map screen to the selected point will be displayed.

1 **Touch and hold the desired point.**



2 **Full route map screen will be displayed for the selected point.**



Related Links

Full route map screen(P. 153)

Audio system ON/OFF and volume adjustment

The audio can be turned off when not in use, or the volume can be adjusted to an appropriate level.

The system can be used when the power switch is in ACC[*1] or ON.

INFORMATION

■ When ACC customization is in off

With the power switch turned off, the multimedia system can still be used for a certain time until the battery-saving function starts operating. To turn off the multimedia system, perform either of the following actions:

- Press [⏻ **VOL**] knob.
- Open the driver's door.

⚠ NOTICE

- Do not use the multimedia system for extended periods when the EV system is not running. Doing so may deplete the 12-volt battery.
- Listen to the audio at an appropriate volume that will not interfere with safe driving.

■ Operating with the audio control knob

Press [⏻ **VOL**] knob to turn the audio on and off. Turn the knob to adjust the volume.

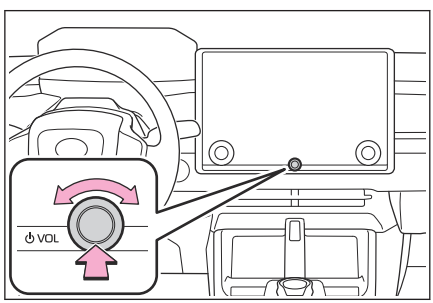

*1 : ACC mode can be enabled/disabled on the customize menu. For details, refer to the vehicle "OWNER'S MANUAL".

■ Operating with the steering switches

[🔊] switch

Adjust the audio volume. Press and hold to adjust the audio volume continuously.

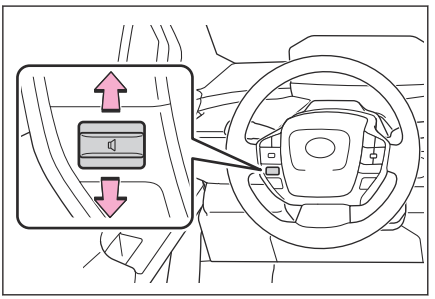

Changing the audio source

Source can be changed to radio, USB, etc.

1 **Touch [♫] from the main menu.**

2 **Touch [Sources].**

3 **Touch the source you wish to select.**



INFORMATION

- When no device is connected to the multimedia system, the switch does not appear on the source selection screen. (USB/iPod/Apple CarPlay/Android Auto/Bluetooth® Audio)
- If a cellular phone is used inside the vehicle or nearby while listening to audio, noise may be output from the audio speakers.
- The following functions cannot be used while Apple CarPlay is connected via USB.
  - iPod
  - USB audio
- USB audio cannot be used while Android Auto is connected via USB.

Changing the source with the steering switch

Changing the source with the steering switch is possible.

[MODE] switch

The sources will switch in order.

Press and hold to pause or mute. Press and hold again to cancel.

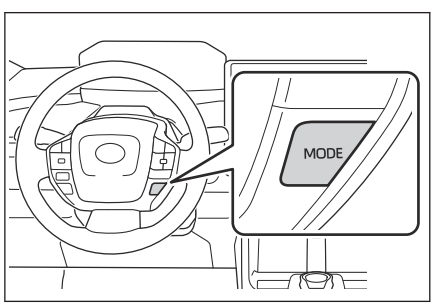

Connecting a device via the USB Type-C port

Connect a device such as smartphone or portable player.

● **Connect the USB Type-C cable to the port.**

When connecting a USB flash drive, connect it directly to the USB Type-C port.

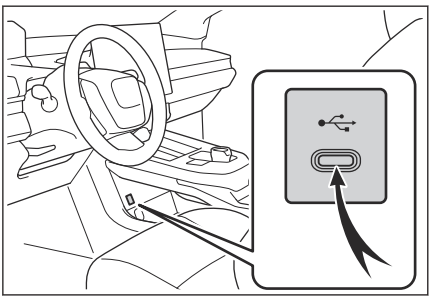

INFORMATION

- Viewing may not be possible, depending on your device.
- When a USB hub is used to connect multiple devices, devices other than the first device to be recognized cannot be used.
- Refer to the instruction manual of the USB Type-C cable and the device to be connected.
- Use a power source such as the battery supplied with the connected device. Using the accessory socket installed in the vehicle may cause noise output. (Refer to the vehicle "OWNER'S MANUAL" for details on the accessory socket.)

NOTICE

- Do not push down on or subject the connected device to unnecessary pressure. The device or its terminal may be damaged.
- Keep the port free of foreign matter. The device or its port may be damaged.

Using the Intelligent Assistant system

Intelligent Assistant is a subscription-based service that allows you to control the multimedia system with voice command and allows you to operate navigation, integrated streaming, radio and phone. Without subscription, the assistant will be limited to Radio, Phone and Climate features.

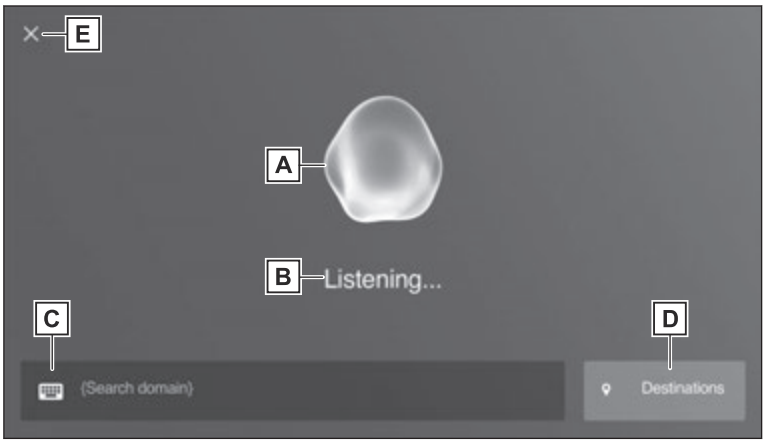

A Displays the voice recognition status.

/ *1 : Waiting for user's voice command

/ *1 : Listening

/ *1 : Processing

B Displays the response of the Intelligent Assistant system.

C Displays the keyboard screen.

Various items can be searched by using the keyboard.

D Sets a destination by selecting a previous destination.

E Closes the voice control screen.

*1 : If not subscribed

INFORMATION

While driving, the voice control screen will appear as a bar at the bottom of the screen.



Related Links

Using the search function(P. 44)

Searching for a destination by category(P. 145)

Intelligent Assistant cloud subscription*1

The Intelligent Assistant allows the customer with the following enhancements:

- Enhanced Voice Recognition / Natural Language Understanding

  Improved voice performance by utilizing both in-vehicle and cloud-based voice recognition.

- Personalized experience

  Offers a unique experience catered to the particular user by utilizing learned user data stored in the cloud.

- Up-to-date information

  Cloud content is constantly kept up-to-date, so there is no need to visit dealer for a data update.

INFORMATION

You can update Intelligent Assistant cloud subscription by touching the [**Update subscription**] button or using Toyota app.

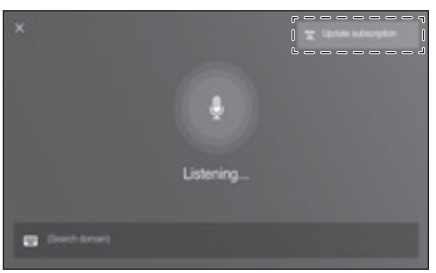

*1 : This function is not available in some regions.

Microphones

Microphones are installed on the driver's side and the passenger's side, respectively.

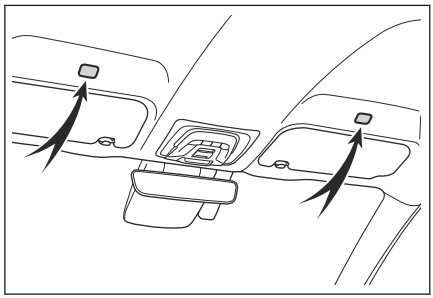

INFORMATION

- Voice controls can be done from the driver seat or passenger seat by activating the voice control system with wake word. In this case, voice commands from seats other than the system activating seats are not recognized.
- Some functions are not available for voice control from passenger seat.

Supported languages

Languages that the Intelligent Assistant recognizes are English, French, and Spanish.

Starting voice control

Voice control can be started by any of the following operations:

■ Press the talk switch

Press the [ ] switch (talk switch) on the steering.

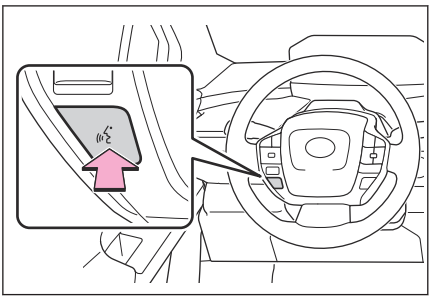

■ Say the wake word

Say "Hey Toyota".

- The wake word can be turned on or off.
- The wake word can be used and then immediately issue a voice command.

  Example: "Hey Toyota", "Take me to an Italian restaurant."

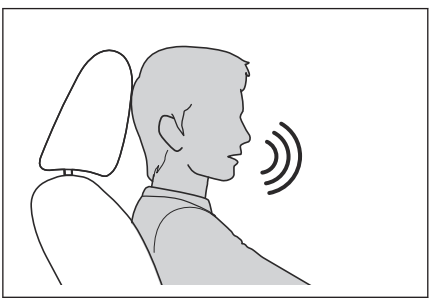

■ Touch the voice search button

Touch [ ] or [ ] on the screen.



INFORMATION

- If the Intelligent Assistant was activated by the [ ] switch or voice search button, voice controls can be performed only from the driver seat.
- The Intelligent Assistant may not recognize commands if they are not said clearly. Take note of the following points when using it:

- Speak in a clear voice.
- Close the window as commands may not be recognized properly due to noise (wind noise or external noise).
- If the air conditioner blows loudly, commands may not be recognized properly, so reduce the air volume.
- If music is being played loudly while a command is issued, that command may not be recognized, so lower the music volume.
- Commands may not be recognized if several people speak at once.

● You can interrupt the voice prompt by saying a voice command.

● You can turn voice prompt on or off on the voice control settings screen.

● You can adjust the system voice volume on the sound and media settings screen.

Related Links

Changing the voice control settings(P. 70)

Changing sound and media settings(P. 66)

Stopping voice control

Voice control can end with one of the following operations:

- **Say "Cancel".**
- **Touch [✕] on the voice control screen.**
- **Press and hold the [🎤] switch on the steering.**

Speaking a voice command

Say a voice command when the voice control screen appears. The system can recognize natural speech.

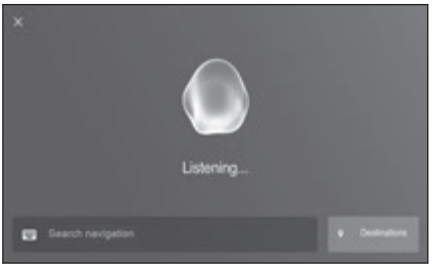

INFORMATION

- Commands may not be recognized if said with an accent or non-standard phrasing.
- If the system does not recognize aliases or abbreviations when searching for place names and facilities, say the official name.

Function list

The following tables list frequently used commands for each function category.

- The functions available may vary according to the system installed.
- Items with "Subscription" will require Intelligent Assistant functionality.

Common

Action	Example voice command	Subscription
Shows list of general commands	"Help"	No
Stops the current conversation and re-starts at the beginning	"Start over"	No
Cancels the voice control system	"Cancel"	No

■ Navigation

Intelligent Assistant system enables navigation voice search. This allows you with variety of features such as searching a point of interest (POI), navigate to an address as well as discovering new POIs.

Function	Example voice command	Subscription
Destination search	"Take me to <location category/business name>" "Take me to an Italian restaurant" "Take me to <address>" "Take me to 6565 Headquarters drive Plano TX" "Take me home" "Take me to work"	Yes
Map control	"Zoom in" "Zoom out"	Yes
Route information	"Cancel trip"	Yes
Telematics	"Call Destination Assist"	No

■ Multimedia control

Allows you to engage in a dialog with the Intelligent assistant to complete various multimedia tasks via voice input.

Function	Example voice command	Subscription
Radio	"Tune to 99.5 FM" "Tune to Rock on FM" "Tune to channel 2 on SiriusXM"	No
Media	"Mute audio" "Next" "Previous"	No
Media Streaming	"Play <artist/album/song/genre/playlist>" "Play Frank Sinatra"	Yes

■ Hands-free phone operation

Allows you to engage in a dialog with the Intelligent assistant to complete various tasks via voice input, such as making a phone call to a contact, or calling destination assist.

Function	Example voice command	Subscription
Phone call	"Call John Smith" "Dial 555 212 1212" "Call back" "Redial"	No
Message	"Send message to John Smith" "Read message"	No

■ Screen display switching

Allows you to easily change to various function screen by voice.

Function	Example voice command	Subscription
Navigation	"Show map"	Yes
Phone	"Show recent calls"	No
Multimedia	"Show the FM station list"	No
Settings	"Show display settings"	No

■ Vehicle device control

Allows vehicle settings to be changed or activated a function by voice.

Function	Example voice command	Subscription
Climate	"Turn on the air conditioner" "Set the temperature to 70 degrees" "Turn the fan speed up"	No

■ Notifications

Offers notifications based on user preferences, vehicle geolocation and learned behavior. Each service can be set to On/Off from the Toyota app.

Function	Detail	Subscrip-tion
POI suggestion (Navigation)	● A POI shared through a smartphone app ● Parking suggestions near destination	Yes
Low battery charge reminder (Navigation)	Automatically notifies user of low battery charge level. If applicable, provides POI list nearby (ahead) or along route and allows user to select and navigate by touch.	Yes

Using the search function

The keyboard can be used to search for contacts, music, locations, and vehicle settings. If using the Intelligent Assistant, a destination that takes advantage of content in the cloud can be searched.

1 **Touch [ ].**

2 **Touch the desired domain to search.**



[**Navigation**] : Searches by the address, intersection, Points of Interest, telephone number, street name, etc.

[**Media**] : Searches by artist name, song title, album name, station name, genre, etc.

[**Phone**] : Searches by contact name or phone number.

[**Vehicle**] : Searches by entering the items you want to display, such as charging schedule.

[**Settings**] : Searches by entering the items you want to set, such as general, date & time, language & units, notifications.

3 **Enter the search text and touch [Go].**

If multiple conditions need to be specified, search by inserting a space between words.



4 **When the list of search results is displayed, touch the desired item.**

INFORMATION

- Operation of the screen is restricted when the vehicle is moving exceeds about 5 mph (8 km/h).
- Keyboard search is not available when Apple CarPlay and Android Auto screens are active.

2 Settings and registration

2-1. Multimedia system initial setup

Linking a User Profile....46

2-2. Various settings

Changing the various settings 52

2-3. Driver settings

Changing and linking a User Profile 54

Setting up how to identify a driver 56

2-4. General settings

Changing general multimedia system settings 59

2-5. Notification settings

Notifications settings.....62

2-6. Screen settings

Changing the screen display settings 64

2-7. Sound and media settings

Changing sound and media settings.....66

2-8. Voice control settings

Changing the voice control settings.....70

2-9. Vehicle settings

Setting dealer information 71

Changing the security settings 72

Updating and checking the software information 75

2-10. Navigation system settings

Displaying the navigation system settings screen 81

Changing the map details settings 82

Changing the route option settings.....84

2-11. Wi-Fi® Settings

Changing Wi-Fi® setting 85

Setting Wi-Fi® Hotspot 87

2-12. Bluetooth® Settings

Setting Bluetooth® devices.....89

2-13. Apps settings

Apps settings 93

Linking a User Profile*1

Linking a user profile for the main user as the initial setup for the multimedia system.

By linking a user profile, you can save the various vehicle and multimedia settings as a profile for each driver. You can drive the vehicle without having to change the settings of other drivers in the case that multiple drivers, such as your friends and family, drive the vehicle.

You can drive the vehicle in guest mode if you do not want to use a user profile.

User Profiles

Some multimedia and vehicle settings for each driver can be saved and the applicable driver can load them before driving the vehicle.

- Up to three user profiles can be saved.
- When you save a profile it will load on every drive until you sign out.
  - Example of multimedia settings include Volume, Audio, Navigation, and Phone.
  - For some vehicles, air conditioning and multi-information display information can be saved.
- Vehicle settings are automatically saved to the current profile when they are changed.
- Search history, individual settings, and other private information can be protected by setting up a profile.
- Touching [**Settings**] displays the driver list screen enabling you to change profiles.

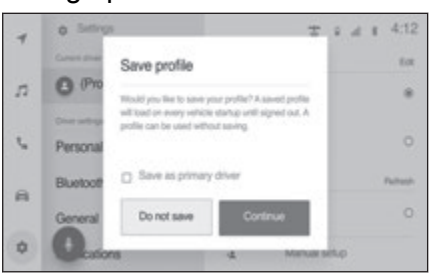

*1 : This function is not available in some regions.

■ Linking to a Toyota account

- An active Toyota account is required to use a profile.
- Linked profiles are saved in the cloud, so even if a profile is deleted in the vehicle, it is not deleted from the cloud.
- By using the Toyota app and linking to a Toyota account, a profile can be loaded from the cloud in any vehicle.
- The driver who is linked as the owner can delete all drivers saved in the vehicle. Drivers who are not the vehicle owner cannot delete the owner's profile.
- The same profile cannot be used in another vehicle at the same time.
- Changing some multimedia settings automatically updates the profile saved in the cloud and a screen notifying the driver that the profile has been updated appears.
- User profile portability from vehicle to vehicle may not be available in the regions other than the U.S. 48 States.

Related Links

Setting up how to identify a driver(P. 56)

Linking a User Profile for the first time

An active Toyota account is required to use a profile.

1 **After starting the vehicle, the language selection screen will be displayed. Touch the desired language.**



2 **To link your vehicle to your profile, download the Toyota app by scanning the QR code with your phone's camera.**

If you do not want to link a profile, touch [**Set up later**]. If you touch

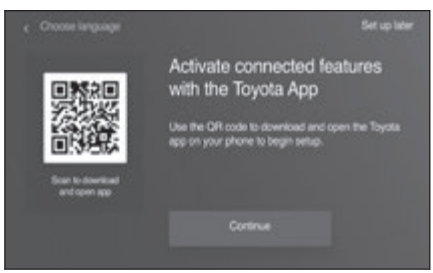

[**Do not show setup again**], the profile linking screen will no longer be displayed.

3 **With the Toyota app open and signed-in, select to add a vehicle, and enter/scan your VIN in the app. Select [Continue] on the multimedia system screen to show the 8-digit authentication code.**

4 **Complete setup to enable the subscription or trial in the Toyota app and touch [I've completed app setup].**

- Once linking is complete, a message is displayed and your profile is saved.
- If you completed the setup for the subscription or trial in the Toyota app, the map screen will be displayed and you can use the navigation system.
- If you do not complete the setup for the subscription or trial in the Toyota app, the subscription screen will be displayed and you cannot use the navigation system.

5 **After linking your profile, register your Bluetooth® device in order to identify the driver. To continue with setup, touch [Yes].**

You can also register a device at a later time.

INFORMATION

- If the user profile was not linked, this process can be restarted by selecting [**Settings**] and [**Get Started**].
- Of the Bluetooth® devices registered to a user profile, only the Bluetooth® device of the most recent driver will be detected. Driver identification may be delayed or may not be able to be performed before starting the vehicle depending on the usage conditions of the Bluetooth® device. It is therefore recommended to register a smart key in addition to Bluetooth® devices.

Related Links

Changing and linking a User Profile(P. 54)

Changing the User Profile

You can select the profile that you want to use from the list of saved users in the vehicle.

1 **Touch [⚙] on the main menu.**

2 **From "Saved profiles", select the user profile name that you want to change to.**

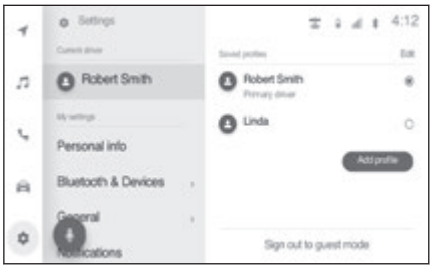

3 **Enter the PIN code.**

- Enter the PIN code set on the Toyota app when the Toyota account was created.
- PIN code is not required if a Bluetooth® device is linked to the driver as an identification device.
- Once the user profile has changed, a message is displayed on the screen.

INFORMATION

If the system detects a device set to another user profile, a pop-up message will appear.

Touching [ ] will enable the user profile to be changed.

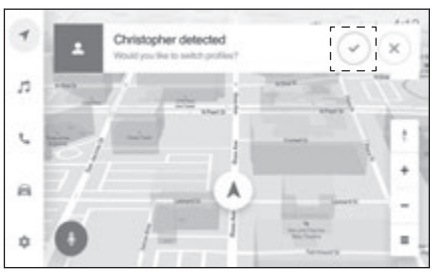

Loading detected profile

If the system detects a Toyota app on a smartphone that another driver is using, the detected profile name will appear on the screen. Touch the profile name desired to be used and enter the PIN code to change the profile.

1 **Touch [ ] on the main menu.**

2 **Touch [Add profile].**

3 **From [Detected profiles], select the user profile name that you want to change to.**

Touch [**Refresh**] to update the profile list.

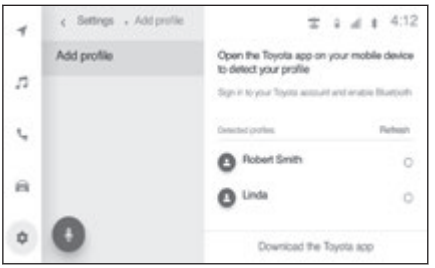

4 **Enter the PIN code.**

- Enter the PIN code set on the Toyota app when the Toyota account was created.
- PIN code is not required if a Bluetooth® device is linked to the driver as an identification device.
- Once the profile has changed, a message is displayed on the screen.

5 **To save the profile in the vehicle, touch [Continue].**

- The loaded profile can be saved in the vehicle as a primary driver or a secondary driver.
- If you do not want to save the profile on this vehicle, you can use it temporarily.

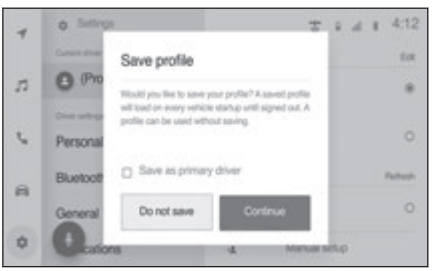

Removing saved profiles

The driver settings linked to the vehicle can be removed by performing one of the following operations.

Removing saved profiles from the profile list

1 **Touch [⚙] from the main menu.**

2 **Touch [Edit] on the [Saved profiles] and select the profile to remove.**

3 **Touch [⊖].**

The saved profile that was selected will be removed from the vehicle.

Removing saved profiles from Settings

1 **Touch [⚙] from the main menu.**

2 **Touch [Personal info] on the sub menu.**

3 **Touch [Delete driver].**

4 **Touch [⊖].**

The saved profile that is currently being used will be removed from the vehicle.

INFORMATION

- When the driver linked as the owner of the vehicle is removed, all of the other saved profiles are removed.
- The driver linked as the owner can remove all of the other saved profiles from the vehicle.

  Drivers other than the owner of the vehicle cannot remove the saved profile of the owner.

Changing the various settings

The various settings related to the multimedia system and the vehicle equipment can be changed.

1 **Touch [ ] on the main menu.**

2 **Select the desired item.**

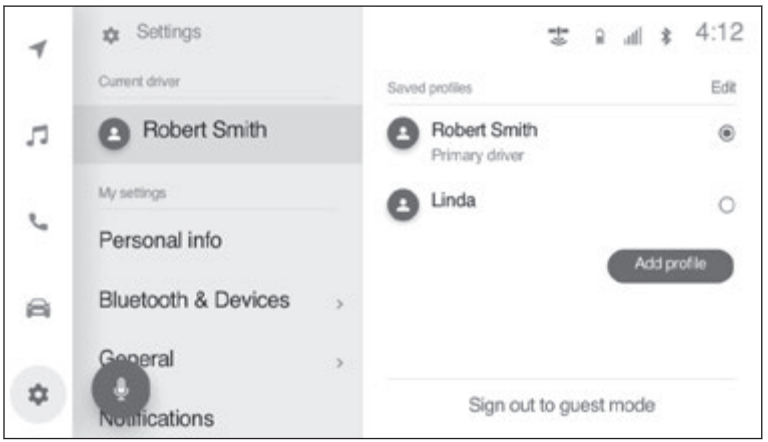

Setting	Description
"Current driver"	
[**(User profile name)**] [**Guest**]	Displays the name of the current user profile. Touching the profile enables you to change or link a user profile.(→ P.54)
"My settings"	
[**Personal info**]	Register a device to identify the driver.(→ P.56)
[**Bluetooth & Devices**]	Register or edit a Bluetooth® device.(→ P.89)
[**General**]	Change the time settings, display language, and other general multimedia settings.(→ P.59)
[**Notifications**]	Change software update and other notification settings.(→ P.62)
[**Wi-Fi**]	Configure Wi-Fi® settings.(→ P.85)

Setting	Description
[**Display**]	Adjust the screen contrast and brightness, etc.(→ P.64)
[**Sound & Media**]	Change the system voice settings and radio settings.(→ P.66)
[**Navigation**]	Change settings related to map display and route guidance. (→ P.82,84)
[**Voice & Search**]	Change setting for Intelligent Assistant.(→ P.70)
"Vehicle"	
[**Vehicle customize**](1)	Change settings related to vehicle devices.
[**Driving assist**](1)	Change setting related to driver assist features like Intuitive parking assist, etc.
[**Dealer info**]	Add, edit or delete dealer information.(→ P.71)
[**Info & Security**]	Change settings related to security and privacy.(→ P.72)
[**Software update**]	Check and update software information.(→ P.75)
[**Apps**]	Re-install applications and Remote Connect.(→ P.93)

(1) Refer to the vehicle "OWNER'S MANUAL"

INFORMATION

For safety purposes, there are functions that cannot be operated while the vehicle is moving.

Changing and linking a User Profile*1

The user profile can be linked or changed. By linking a user profile, multimedia settings, and various other individual vehicle settings can be saved as a profile for each driver.

1 **Touch [ ] on the main menu.**

2 **Touch [(User profile name)] or [Guest] on the sub menu.**

3 **Select the desired item.**

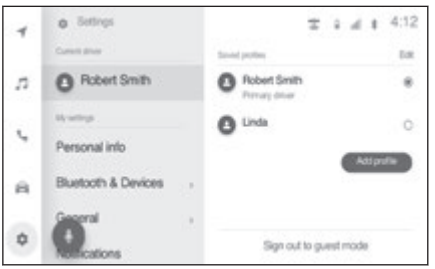

Setting	Description
[**Get started**]	If the primary user profile has not been saved, profile linking will start.(→ P.47)
[**Saved profiles**]	The saved user profiles on the vehicle are displayed in a list. Touch the profile that desired to be used and enter the PIN code to change the profile. Touching [**Edit**] enables you to remove saved profiles. Profiles are still stored on the cloud, preserving all settings and personalized information. Up to three user profiles can be saved on the vehicle.
[**Add profile**]	Touching [**Add profile**] displays the detected profiles screen. If the system detects a Toyota app on a smartphone that another driver is using, the detected profile name will appear on the screen. Touch the profile name that desired to be used and enter the PIN code to change the profile. [**Refresh**] to update the profile list. Manually refreshes the detected profile list, when a Bluetooth® device is not found in the list.

*1 : This function is not available in some regions.

Setting	Description
[**Sign out to guest mode**]	Sign out of the current user profile to go to guest mode. This feature can be used for valet to protect personal information. Values of the driver settings other than search history and personal settings will be carried over to the driver setting of the guest.

INFORMATION

For safety purposes, these settings cannot be operated while the vehicle is moving.

Setting up how to identify a driver

Set a device in order to identify a driver. When the vehicle is started and a registered device is detected, the profile that the device is assigned to is automatically loaded. You can select a smartphone and smart key as the device to be registered.

1 **Touch [ ] on the main menu.**

2 **Touch [Personal info] on the sub menu.**

3 **Select the desired item.**

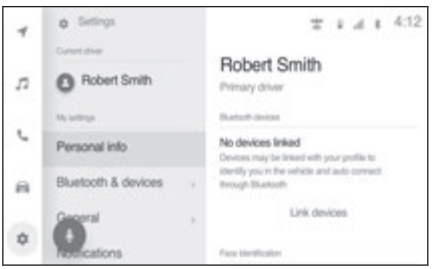

Setting	Description
User profile name(1)	The name of the user profile is displayed.
"Bluetooth devices"(1)	Driver identification is performed using a smartphone or other Bluetooth® device and the applicable profile is loaded. Touch [**Link devices**] to register.(→ P.109)
[**Face identification**](1)(2)(3)	Driver identification is performed using a face and the applicable profile is loaded. Touch [**Setup face**] to register.(→ P.57) To delete the registered face information, touch [**Remove face**].
[**Link key**](1)(3)(4)	Driver identification is performed using the vehicle's smart key and the applicable profile is loaded.
[**Reset settings**]	Some multimedia settings for the selected user profile will be reset.

Setting	Description
[**Delete driver**](1)	The selected user profile will be removed from the vehicle.

(1) Not displayed in guest mode
(2) If equipped
(3) Refer to the vehicle "OWNER'S MANUAL"
(4) Cannot be used with fleet vehicles such as rental cars.

Registering face identification

Face identification enables the system to identify the driver.

1 **Touch [ ] from the main menu.**
2 **Touch [Personal info] on the submenu.**
3 **Touch [Setup face].**
4 **Carefully read the Terms of Service and touch [Accept].**
5 **Look directly at the driver monitor camera, ensure only your face is being displayed, and then touch [Begin].**

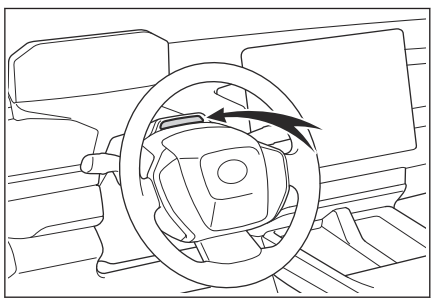

6 **The system will start scanning your face.**
- Once registration is complete, a message is displayed on the screen.
- If an error message appears, follow the on-screen instructions and try again.

Troubleshooting

If there is a problem with the user profile function, first check the table below.

Problem	Likely cause	Solution
Unable to load saved profile	System is not loading the previously saved profile.	Turn the Bluetooth® setting on and ensure the device is paired with the system and set as primary device.
Unable to load saved profile with Bluetooth® setting turned on		Ensure Bluetooth® setting is turned on and Toyota app is running on device.
Forgot PIN	PIN needs to be reset.	PIN can be reset using the Toyota app.
Unable to add a Bluetooth® device to a profile	System does not accept the Bluetooth® device thus preventing you to add the device to your profile.	Verify your device is not associated with other driver's profile.
Unable to detect profile	System does not show the profile in the detected list.	Verify your device's Bluetooth® setting is on and Toyota app is running on your device.
Unable to generate QR / authorization code	System is not loading your QR code or manual authorization code.	Verify that car is in good network area and DCM connection is active.
Failed to complete registration	QR and manual authorization code are valid for a limited time of few minutes.	Restart registration process by going back previous screen and entering phone number again to get a new QR code / manual authorization code.

Changing general multimedia system settings

The time settings, display language, and other general multimedia system settings can be changed.

1 **Touch [ ] on the main menu.**

2 **Touch [General] on the sub menu.**

3 **Select the desired item.**

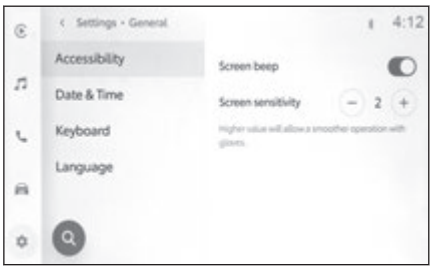

● [**Accessibility**]

Setting	Description
[**Screen beep**]	Turn the sound that is made when you touch the screen on or off.
[**Screen sensitivity**]	Adjust the screen touch sensitivity.

● [**Date & Time**]

Setting	Description
[**Set date & time by GPS**]	Use GPS information and map data to automatically set the time. Turning this setting off will enable you to set the time and time zone manually.
"Time"	
[**24-hour time**]	Change between 24-hour and 12- hour time display.
[**Time zone**]	When [**Set date & time by GPS**] is turned off, you can set the time zone.

Setting	Description
[**Daylight savings**]	When [**Set date & time by GPS**] is turned off, you can set daylight saving time to [**Auto**], [**On**] or [**Off**].
[**Set time automatically**]	Use GPS information to automatically set the time.
[**Set time manually**]	When [**Set time automatically**] is turned off, you can manually set the time.
"Date"	
[**Format**]	Change the date display format. (MM/DD/YYYY, DD/MM/YYYY, YYYY/MM/DD, etc.)

● [**Keyboard**]

Setting	Description
"History"	
[**Clear search history**]	Delete the keyboard search history.

● [**Language & Units**]

Setting	Description
[**Language**]	Change languages. Both the language displayed on the screen and system voice language change.
"Measurements"	
[**Set automatically**]	Automatically sets the display units for distance, and so on.
[**Distance**]*	When [**Set automatically**] is turned off, you can manually set the distance display unit.
[**Fuel/Electricity consumption**]	When [**Set automatically**] is turned off, you can manually set the display unit.

* : If equipped

Setting	Description
[**Tire pressure**]	When [**Set automatically**] is turned off, you can manually set the tire pressure display unit.

INFORMATION

Set the Apple CarPlay/Android Auto language using the connected device.

Notifications settings*1*2

Software update and other notifications can be changed.

1 **Touch [ ] on the main menu.**

2 **Touch [Notifications] on the sub menu.**

3 **Select the desired item.**

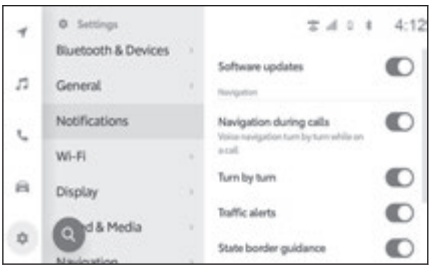

Setting	Description
[**Software updates**]	Turn the notification for software updates on or off.
[**Vehicle suggestions**]	Change the frequency of the suggestion notification from the system.
[**Virtual assistant**]	Turn the notification from the Intelligent Assistant service on or off.
"Navigation"	
[**Navigation during calls**]	Turn the navigation system voice guidance on or off during a phone call.
[**Turn by turn**]	Turn the turn-by-turn voice guidance on or off.
[**Traffic alerts**]	Turn the traffic information voice guidance on or off.
[**State border guidance**]	Turn the voice guidance informing you that you have crossed a border on or off.
[**Unverified roads**]	Turn the guidance for unverified roads on or off.

*1 : This function is not available in some regions.

*2 : Some features may require subscription.

Setting	Description
[**HOV/HOT lanes**]	Turn the guidance for high-occupancy vehicles lane/high-occupancy toll lane on or off.

Changing the screen display settings

The screen contrast and brightness can be adjusted.

1 **Touch [ ] on the main menu.**

2 **Touch [Display] on the sub menu.**

3 **Select the desired item.**



● [**Screen**]

Setting	Description
[**Display**]	Set whether to turn the screen display on or off. If the screen is turned off, nothing will be displayed on the screen and only audio will be played. To display the screen again, touch the screen and touch the button in the center of the screen.
"Mode"	
[**Automatic**](1)	Automatically change the screen to day or night mode in accordance with whether the headlight is turned on or off.
[**Daytime (light)**]	When [**Automatic**] is turned off, you can manually change to day mode.
[**Nighttime (dark)**]	When [**Automatic**] is turned off, you can manually change to night mode.
[**Brightness**]	Adjust the screen brightness.

Setting	Description
[**Contrast**]	Adjust the strength of the screen contrast.

(1) Depending on the situation such as while parking, day or nights mode may not be changed automatically.

● [**Camera**]

Setting	Description
"Camera screen"	
[**Brightness**]	Adjust the camera screen brightness.
[**Contrast**]	Adjust the strength of the camera screen contrast.

INFORMATION

- Even if the screen is turned off, the GPS will continue to track the vehicle's current location.
- When the screen is turned off
  - When the screen is off, if the screen is touched, the air conditioning system can be operated.
  - If the screen is touched while the screen display is off, the release button will be displayed in the center of the screen. To display the screen, touch the release button. If there is no operation for 3 seconds, the screen display will turn off again.
  - Even if the screen display is off, the screen may be displayed temporarily, such as when you press the [ ] switch (talk switch) on the steering wheel or when the shift position is set to "R".

Changing sound and media settings

Change the system voice volume and audio source settings.

1 **Touch [ ] on the main menu.**

2 **Touch [Sound & Media] on the sub menu.**

3 **Select the desired item.**

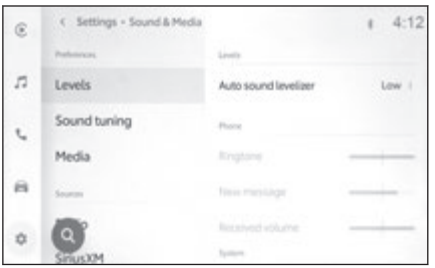

● [**Levels**]

Setting	Description
"Levels"	
[**Auto sound levelizer**]	Automatically adjust for volume based on the vehicle speed.
"Phone"	
[**Ringtone**](1)	Adjust the ringtone volume.
[**New message**]	Adjust the volume when you receive a message.
[**Received volume**](1)	Adjust the receiver volume.
"System"	
[**System voice**]	Adjust the system volume.
[**Driving Assist**]	Adjust the volume of the driving support system.

(1) The volume level between the paired mobile device and the multimedia system are synchronized. When the volume of the device is changed, it change the multimedia volume for Bluetooth® audio.

● [**Sound tuning**]

Setting	Description
"Equalizer"	

Setting	Description
[**Treble**]	Adjusts the level of the treble.
[**Mid**]	Adjusts the level of the midrange.
[**Bass**]	Adjusts the level of the bass.
[**Balance & Fade**]	Adjust the fader and balance by moving [●]. Touch [**Recenter**] to return to the center.

● [**Media**]

Setting	Description
"General"	
[**Display cover art**]	Displays cover art such as for music albums.

● [**Radio**]

Setting	Description
"Radio"	
[**Display FM info**]	Displays RDS (Radio Data System) text.
[**HD Radio FM**]	Receives HD radio™ in all frequency bands of FM radio.
[**HD Radio AM**]	Receives HD radio™ in all frequency bands of AM radio.
[**Clear radio station history**]	Clears the AM and FM reception history.
"Gracenote database"(1)	
[**Enhance metadata/artwork**]	Uses the Gracenote® radio recognition technology. ● Displays the logos of the favorites and the station list. ● Changes the category names of the station list. ● Automatically updates the station list.

(1) This function is not available in some regions.

● [**SiriusXM**]*1

Setting	Description
"Account information"	
[**Active**] or [**No Subscription**]	Displays the current contract status. If the service cannot be used, contact the customer center as to what is shown on the screen.
"Preferences"	
[**Notifications**]	Display notifications from SiriusXM.
[**Block explicit**]	Blocks harmful designated channels.
[**Tune start**]	Plays from the beginning of the track when a music channel is selected.
[**Clear listening history**]	Clears the SiriusXM reception history.

● [**Sports**]*1

Setting	Description
[**Sports**]	Notifications for the start of games involving sports teams registered as favorites.
[**NFL**]	Touch [**Edit**] to register your favorite NFL team.
[**MLB**]	Touch [**Edit**] to register your favorite MLB team.
[**NBA**]	Touch [**Edit**] to register your favorite NBA team.
[**NHL**]	Touch [**Edit**] to register your favorite NHL team.
[**College football**]	Touch [**Edit**] to register your favorite College football team.

*1 : This function is not available in some regions.

Setting	Description
[**College basketball**]	Touch [**Edit**] to register your favorite College basketball team.

● [**Music**]*1

Setting	Description
[**Artists & Songs**]	Notification when an artist or song registered as a favorite is played on SiriusXM.
[**Edit**]	Deletes the artist or song.
[**Delete all**]	Deletes all the artists or songs registered as favorites.

● [**Help and support**]*1

Setting	Description
[**Contact**]	Displays the number of SiriusXM Customer Care. Touch the number to call directly.
[**Radio ID**]	The Radio ID information required when calling SiriusXM Customer Care is displayed.
[**Version**]	Version information is displayed.

INFORMATION

Using the [**VOL**] knob during system voice guidance adjusts the volume of the voice guidance.

*1 : This function is not available in some regions.

Changing the voice control settings

The settings related to the voice recognition feature can be changed.

1 **Touch [ ] on the main menu.**

2 **Touch [Voice & Search] on the sub menu.**

3 **Select the desired item.**

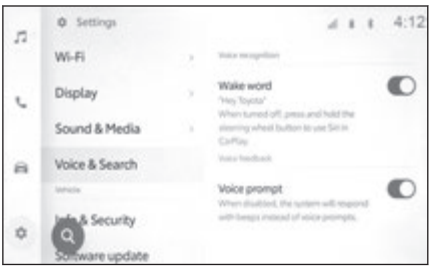

Setting	Description
"Voice recognition"	
[**Wake word**]	Voice control can be started by speaking the wake word.
"Voice feedback"	
[**Voice prompt**]	Turn the voice prompts on or off.

Setting dealer information*1

You can register and delete dealer information. Registering the information of the dealer at which you get your vehicle serviced enables you to contact the dealer from the settings screen when you want to reserve a service.

1 **Touch [ ] on the main menu.**

2 **Touch [Dealer info] on the sub menu.**

3 **Select the desired item.**

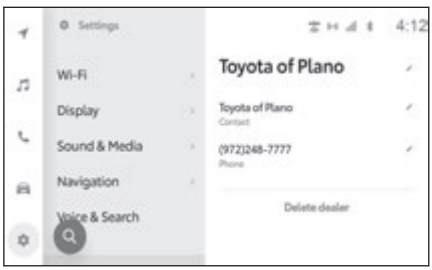

Setting	Description
[**Add dealer**]	Registers the preferred dealer, contact name and phone number.
Dealer name	Displays the stored dealer name. Touching [ ] enables to change the information.
"Contact"	Displays the stored contact name. Touching [ ] enables to change the information.
"Phone"	Displays the stored phone number. Touching [ ] enables to change the information.
[**Delete dealer**]	Deletes the dealer information.

*1 : This function is not available in some regions.

Changing the security settings

Settings related to security and privacy can be changed.

1 **Touch [ ] on the main menu.**

2 **Touch [Info & Security] on the sub menu.**

3 **Select the desired item.**



Setting	Description
[**Vehicle name**]	Displays the system name (vehicle name). This is the device name displayed when searching for a Bluetooth® device from an external device. You can change the name by touching it.
"Digital keys"(1)(2)	
[**Enable digital keys**]	Enable the use of digital keys.
[**Remove digital keys**]	Delete registered digital keys. When deleting the digital key, perform the operation in an area with good DCM reception. If deleting the digital key fails, wait about 1 minute and try again.
"Privacy"	
[**Privacy lock**]	Enable the password-protected privacy lock to protect personal information. When set ON, entering the password will be required when the battery is replaced or the multimedia system is removed from the vehicle.

Setting	Description
[**Reset privacy lock password**]	Reset the set privacy lock password.
[**System reset**]	Reset all of the system's data and restore the settings to the factory defaults.

(1) Refer to the vehicle "OWNER'S MANUAL"
(2) If equipped

INFORMATION

- Communication may be cut off after resetting the system. In that case, restart the system.
- After initializing all the information, all the data in the multimedia system will be initialized and returned to the factory default. It cannot be returned to the state before initialization.

Related Links

Restarting the system(P. 15)

Setting up the privacy lock

1 **Touch [ ] on the main menu.**
2 **Touch [Info & Security] on the sub menu.**
3 **Touch [Privacy lock].**
4 **Touch [OK].**
5 **Set a password that contains between 4 and 15 alphanumeric characters.**
6 **Reenter your password.**

A message will appear and the privacy lock is enabled.

INFORMATION

- After a password is set, if the system is reset after the battery is replaced or the multimedia system is removed from the vehicle, a password to operate the multimedia system needs to be entered. Enter the password that you set.

- If the password is entered incorrectly a certain number of times, you will no longer be able to enter a password. If that happens, ask your dealer to unlock the system or reset it by touching [**System reset**].
- To ensure security, do not repeatedly use the same password or a word that can be found in the dictionary when setting a password.

Updating and checking the software information*1

Check and update software information. The software is updated for the purpose of improving multimedia system functions and operations for more smoother usability.

1 **Touch [ ] on the main menu.**

2 **Touch [Software update] on the sub menu.**

3 **Select the desired item.**

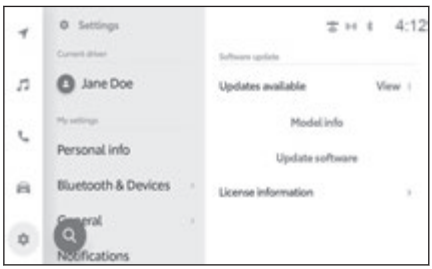

Setting	Description
"Software update"	
[**Updates available**]	Touch [**View**] to check software update information. After checking whether there is an update available and the content of the update, the updated data can be downloaded and software update can be installed. If there is no updated data available, "No updates available" will be displayed.
[**Model info**]	Check the current software version etc.
[**Update software**]	Updating the software. This will not be displayed if there is no update data available.
[**Output info to USB memory**]	Copy the vehicle information to update the software to the USB flash drive. Download the update data from the user portal site based on the information written to the USB flash drive and update the software for the multimedia system.(→ P.78) This setting will not be displayed if the USB flash drive is not inserted into the USB Type-C port.

*1 : This function is not available in some regions.

Setting	Description
[**History**]	Check software update history. This setting will not be displayed if there is no update history.
[**License information**]	Check the software license information.

Updating the software

Use one of the following methods to update the software:

- **Update the software using Data Communication Module (DCM)**
- **Update the software using Wi-Fi®**
- **Update the software using a USB flash drive**

INFORMATION

- Map data cannot be updated using this service.
- Some operations cannot be performed while the software is updating.
- If there are any questions, contact your Toyota dealer.

NOTICE

- To update the software using a USB flash drive, a USB flash drive that has more than 4 GB of available space and a computer that can connect to the internet are required. Note that communication charges may be high depending on your computer environment.
- Update the software at your own risk.
- The software cannot be restored to the previous version once the software has been updated.
- The update software can only be used on this system. It cannot be used on any other device.
- Depending on the content of the software update, some settings may be reset. If that happens, reconfigure the applicable settings after the software has been updated.
- Although basic functions are possible during the software update, operation may be slow. If possible, do not operate the system.
- After the software is updated, the Toyota Motor Corporation distribution server will be automatically notified that the update has completed.

⚠ NOTICE

Note that Toyota Motor Corporation does not use the information it receives for any purpose other than software updates. You may also be charged for communication fees depending on your subscription.

Updating the software using DCM or Wi-Fi®*1

This system regularly accesses the distribution server to check for software updates.

1. Touch the button in the software update notification.
2. Follow the on-screen instructions to check and agree to the update content and terms.
   - Downloading of the update data will start. Once the data has been downloaded, installation will begin.
   - The time required for download and installation may increase depending on the communications environment. If you turn off the power switch while the software is installing, installation will resume the next time the vehicle is started.
   - Once the update is complete, a message is displayed on the screen.
   - If the system needs to be restarted, a message will appear. Touching [**Yes**] restarts the system.
   - To check the software update history, touch [**History**] on the software update history screen.

Manually updating the software

1. Touch [⚙] on the main menu.
2. Touch [**Software update**] on the sub menu.
3. Touch [**View**] of "Updates available".
4. Follow the on-screen instructions to check and agree to the update content and terms.
   - Downloading of the update data will start. Once the data has been downloaded, installation will begin.
   - The time required for download and installation may increase depending on the communications environment. If you turn off

*1 : This function is not available in some regions.

the power switch while the software is installing, installation will resume the next time the vehicle is started.

- Once the update is complete, a message is displayed on the screen.
- If the system needs to be restarted, a message will appear. Touching [**Yes**] restarts the system.
- To check the software update history, touch [**History**] on the software update history screen.

INFORMATION

- If critical update data is available on the distribution server, a message will be displayed. Touch [**OK**] to download the update data.
- If the software update fails, the system will start with the previous version.
- The following conditions must be met to use Wi-Fi® to update the software:
  - The Wi-Fi® function is turned on.
  - The vehicle must be in a location where it can access Wi-Fi®
  - The system must be connected to a Wi-Fi® access point (e.g. home, work, etc.)
- A USB update process may be used if a DCM or Wi-Fi® update is not possible.

Updating the software using a USB flash drive*1

Copying the update data to a USB flash drive

1. Touch [⚙] on the main menu.
2. Touch [**Software update**] on the sub menu.
3. Insert the USB flash drive into the USB Type-C port on the vehicle.
4. Touch [**Output info to USB memory**].

   The vehicle information to update the software is copied to the USB flash drive.
5. Touch [**OK**] to remove the USB flash drive.

*1 : This function is not available in some regions.

6. Insert the USB flash drive with the copied vehicle information into the USB Type-C port on a computer.
7. On the computer, go to the user portal site (https://www.toyota.com/firmware-updates) and download the update data onto the computer.
   - The update data will be downloaded based on the vehicle information written on the USB flash drive.
   - If you cannot find any update data, this means that there is currently no update data available for the applicable system. Update data is released as necessary.
8. Copy the update data that was downloaded to the computer onto the USB flash drive.

   Save the update data in the root directory on the USB flash drive. If the update data is saved in folder that was created, the update software cannot be loaded.
9. Once the updated data has finished copying, remove the USB flash drive.

INFORMATION

The vehicle information written to the USB flash drive is also required when updating the software on this system, so do not delete the vehicle information on the USB flash drive until the update has completed.

Updating the software

1. Touch [ ] on the main menu.
2. Touch [**Software update**] on the sub menu.
3. Insert the USB flash drive with the copied update data into the USB Type-C port on the vehicle.
4. Touch [**Update software**].
   - The update data is copied and installation begins.
   - Once installation is complete, a message is displayed stating that the update has finished.
5. Follow the on-screen instructions to check and agree to the update content and terms.
   - The update data is copied and installation begins.

- Once installation is complete, a message is displayed stating that the update has finished.
- Leave the USB connected if the system needs to be restarted. A message will appear when restart is ready. Touching [**Yes**] restarts the system.

6. Remove the USB flash drive.
   - To check the software update history, touch [**History**] on the software update history screen.
   - If the software update was done offline, an update completion report data will be created on the USB flash drive. It is necessary to upload the update completion report data to the portal site.

⚠ **NOTICE**
Do not remove the USB flash drive or turn the power switch off while the software is updating.

Related Links

Connecting a device via the USB Type-C port(P. 34)

Displaying the navigation system settings screen

Through the navigation system settings, various settings can be changed.

1 **Touch [ ] on the main menu.**

2 **Touch [Navigation].**

3 **Touch the desired item.**

Setting	Description
[**Map details**]	Touch to display the map details settings screen
[**Route options**]	Touch to display the route options

Related Links

Changing the map details settings(P. 82)

Changing the route option settings(P. 84)

Changing the map details settings

1 **Touch [ ] from the main menu.**

2 **Touch [Navigation] on the sub menu.**

3 **Touch [Map details].**

4 **Select the desired item.**

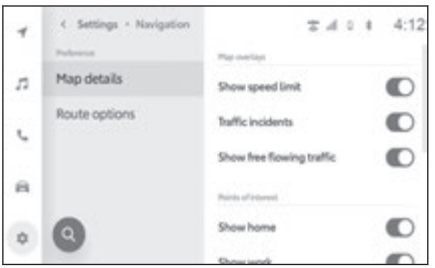

Setting	Description
"Map overlays"	
[**Show speed limit**]	Turns the speed limit information on/off.(1)
[**Traffic incidents**]	Turns the display of the traffic incident display on/off.
[**Show free flowing traffic**]	Turns the display of an arrow for free flowing traffic on/off.
"Points of interest"	
[**Show home**]	Turns the icon of the home display on/off.(2)
[**Show work**]	Turns the icon of the work display on/off.(2)
[**Show favorites**]	Turns the icons of the favorites display on/off.
[**Show nearby parking**]	Turns the icons of the nearby parking display on/off.
[**Calibrate map**]	Adjusts the position of the current position mark manually.

(1) Vehicles equipped with RSA (Road Sign Assist) will display the speed limit on the Heads-Up Display.

(2) Home and Work must be added via Toyota app.

Calibrating position/direction

When driving, the current position mark will be automatically corrected by GPS signals. If GPS reception is poor at the current location, the current position mark can be adjusted manually.

1 **Display the map details settings screen.**

2 **Touch [Calibrate map].**

3 **Scroll the map to the desired point.**



4 **Touch or hold [ ] to change the heading.**

5 **Touch [Save].**

[**Reset**]: Returns the current position mark to its previous position.

Changing the route option settings

1 **Touch [ ] from the main menu.**

2 **Touch [Navigation] on the sub menu.**

3 **Touch [Route options].**

4 **Select the desired item.**

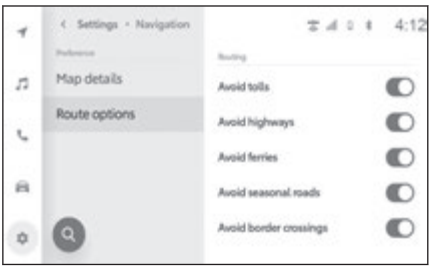

Setting	Description
[**Avoid tolls**]	Avoids routes that use toll roads.
[**Avoid highways**]	Avoids routes that use highways.
[**Avoid ferries**]	Avoids routes that use ferries.
[**Avoid seasonal roads**]	Avoids routes that have seasonally restricted roads.
[**Avoid border crossings**]	Avoids routes that crosses borders.

Changing Wi-Fi® setting

Change Wi-Fi® settings.

1 **Touch [ ] from the main menu.**

2 **Touch sub menu [Wi-Fi] > [Wi-Fi] in this order.**

3 **Select the desired item.**

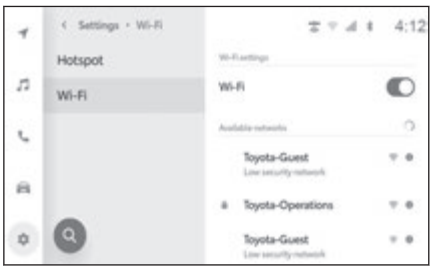

● "Wi-Fi settings"

Setting	Description
[**Wi-Fi**]	Enables or disables the Wi-Fi® function.

- A message may be displayed depending on the multimedia system settings. Perform the operation according to the guidance on the screen.
- Turning on [**Wi-Fi**] will display nearby networks that are available.
- Turning off [**Wi-Fi**] will disconnect the Wi-Fi® connection.

● "Available networks" ("Available networks" will display while [**Wi-Fi**] is on.)

Setting	Description
Name of network to connect to (Network SSID)	Connects to the network touched.
Name of network to display (Network SSID) [ ]	Displays the network information display.

- Network name may display as duplicate when more than one MAC address shares the same network.
- A maximum of 30 networks can be displayed. The list is automatically updated every six seconds.
- If there are devices using the same network name (Network SSID), it cannot identify which device to use. If using multiple devices, use different network names (Network SSIDs) for each device.

● Network information display (Displays when for the network name is touched.)

Setting	Description
"Auto connect"*1	Turns on or off the setting to automatically connect when searching for networks.
"Network SSID"	Displays the network name (Network SSID).
"MAC address"	Displays the MAC address of the network.
"Security"	Displays the security protocol of the network.
"Frequency band"	Displays the network frequency.
"Forget this network"*1	Deletes the connection history of the selected network from the multimedia system. The deleted network will be recognized as a network which has never been connected to the system before.

- [**Forget this network**] does not disconnect the current Wi-Fi® network connection. The network information will not be remembered and not reconnect to this Wi-Fi® network when restarting Wi-Fi®.

INFORMATION

- The network connection history retains up to 20 items, deleting the oldest when a new one is saved.
- Insecure networks are not registered in the network connection history.

Related Links

Precautions when using Wi-Fi® devices(P. 111)

Connecting to a network using Wi-Fi®(P. 114)

*1 : Only networks with a connection history to the multimedia system are displayed.

Setting Wi-Fi® Hotspot*1

The access point settings can be changed via the Wi-Fi® Hotspot function.

Use of this function requires a Wi-Fi® Hotspot subscription that is provided by Wi-Fi® service provider.

Contact your Toyota dealer for details.

INFORMATION

- This function cannot be used if the Wi-Fi® function is on.
- A total of ten devices (five using 2.4 GHz and five using 5.0 GHz) can be connected. Recommend connecting up to five devices at a time for optimum performance. If connected to Apple CarPlay or Android Auto over wireless, the limit will be five devices using 2.4GHz.

1 **Touch [ ] from the main menu.**

2 **Touch [Wi-Fi] > [Hotspot] from the sub menu.**

3 **Select the desired item.**

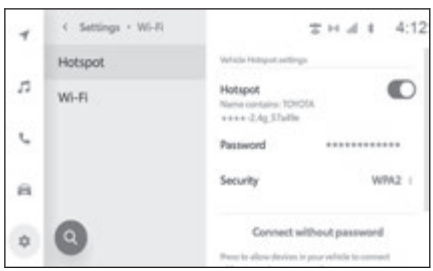

● "Vehicle hotspot settings"

Setting	Description
[**Hotspot**]	Enables or disables the Wi-Fi® Hotspot function.
[**Password**]*2	Changes the access point password.
[**Security**]*2	Changes the security protocol for the access point.
[**Connect without password**]*2	Accepts connections to the access point with the simple setup. • No selections can be made when the maximum number of devices are already connected. • This cannot be selected if the acceptance time is exceeded.

*1 : This function is not available in some regions.

*2 : This will only display when [**Hotspot**] is turned on.

Setting	Description
[**Connect without password**]*2	• This is only for WPS supported devices.

● A message may be displayed depending on the multimedia system settings. Perform the operation according to the guidance on the screen.

INFORMATION

● When changing the setting, the Wi-Fi® Hotspot function will need to be restarted. All devices connected via Wi-Fi® will be disconnected.

● The following guidelines are recommended when setting a password, to prevent a third party from gaining unauthorized access.

- Use at least 13 characters
- Use a mixture of letters and numbers
- Change it regularly
- If the password is written down, do not store it out in the open
- Do not reuse the same password, or use a similar password
- Do not use the vehicle name or license plate number, or a common word found in the dictionary or the like
- Do not substitute letters for common dictionary words in a way that would be easy to guess (for example, using "c@t" instead of "cat")

Related Links

Precautions when using Wi-Fi® devices(P. 111)

Establishing a connection to Wi-Fi® Hotspot(P. 117)

Functional overview(P. 222)

Setting Bluetooth® devices

How to use the multimedia system and the connected Bluetooth® device can be set.

INFORMATION

- Settings details are set separately for each individual Bluetooth® device.
- Audio may skip if hands-free calling is selected while playing Bluetooth® audio.
- Depending on the Bluetooth® device model, it may be necessary to perform operations on the Bluetooth® device.
- A Bluetooth® device cannot be selected during an emergency call.
- Settings cannot be selected while driving.
- Settings may not be selectable depending on the status of the Bluetooth® device.

1 **Touch [ ] from the main menu.**

2 **Touch [Bluetooth & Devices].**

3 **Touch the Bluetooth® device to configure from the sub menu.**

Nothing will display unless at least one Bluetooth® device is registered.

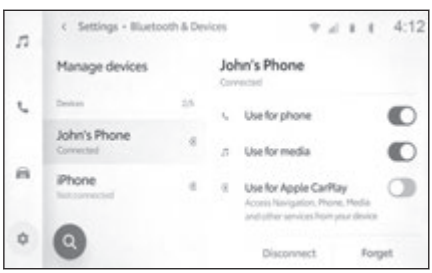

4 **Select the desired item.**

Setting	Description
[**Use for phone**]	Enables or disables the hands-free call function.*1*2

*1 : Displayed only when the Bluetooth® device can execute this function. Toggling the function on or off will display or hide related functions, or turn them on or off. This cannot be used for calls or audio while Apple CarPlay or Android Auto is set to on. The same also applies in reverse.

*2 : The connection with this function will be disconnected if the button is turned off. When connected with a device such as by being automatically connected, the function that turned off will not automatically turn on. The connection with this function will be activated if the button is turned on.

Setting	Description
[**Use for media**]	Enables or disables the audio function.*1*2
[**Use for Apple CarPlay**]	Enables or disables the Apple CarPlay function.*1*2
[**Use for Android Auto**]	Enables or disables the Android Auto function.*1*2 If the [**Use for Android Auto**] settings are switched off while using Android Auto, [**Use for phone**] settings will be switched on.
[**Setup secure password**]	The password for the Wireless Android Auto function can be changed.
[**Set as secondary device**]	Sets the device as a secondary device. This setting can be used when a driver has been registered and the HFP-supported Bluetooth® device has not been set as the primary device. Touch [**Set as secondary device**] to set the device as the secondary device. The priority order for connecting Bluetooth® devices is primary device, secondary device, and latest device in the connection history.
[**Remove secondary device setting**]	Removes the device as a secondary device.
[**Disconnect**]	Disconnects a Bluetooth® device from the multimedia system. The connected functions will turn off. The device may not automatically connect to the function even if the device is reconnected.
[**Forget**]	Allows registered Bluetooth® devices to be deleted.

● "General"

*1 : Displayed only when the Bluetooth® device can execute this function. Toggling the function on or off will display or hide related functions, or turn them on or off. This cannot be used for calls or audio while Apple CarPlay or Android Auto is set to on. The same also applies in reverse.

*2 : The connection with this function will be disconnected if the button is turned off. When connected with a device such as by being automatically connected, the function that turned off will not automatically turn on. The connection with this function will be activated if the button is turned on.

Setting	Description
[**Sort contacts by**]	The display of names registered in your contacts can be changed as follows. • Sort contacts by the first name. • Sort contacts by the last name.
[**Do not disturb**]	The following settings are available for hands-free calling for incoming calls. • Set to [**Off**] to enable notification by ringtone and display. • Set to [**Silent**] to disable notification by ringtone. • Set to [**On**] to decline incoming calls and disable notification by audio and display. It cannot be used for the phone function of Apple CarPlay and Android Auto. While Android Auto is connected, it cannot be used for the hands-free function of multimedia.
[**Auto read messages**]	Enables or disables the automated message dictation function.
[**Clear call history**]	Deletes hands-free call history data. Displayed when a cellular phone with [**Sync contacts**] turned off is connected.

● "Syncing"

Setting	Description
[**Sync contacts**]	Enables or disables automatic transfer of contacts, favorites, and history to the multimedia system. When the setting is changed from disabled to enabled, automatic transfer of the phone book starts. Favorites may not be transferred depending on the connected cellular phone even if it is supported.

Related Links

Precautions when using Bluetooth® devices(P. 96)

Bluetooth® specifications and compatible profiles(P. 99)

Precautions for hands-free calling(P. 188)

Precautions for Bluetooth® audio playback(P. 183)
Precautions when using Apple CarPlay and Android Auto(P. 120)
Setting a Bluetooth® device as a primary device(P. 109)
Setting a Bluetooth® device as a secondary device(P. 110)
Linking a User Profile(P. 46)
Changing and linking a User Profile(P. 54)

Apps settings

Your multimedia system now have apps that integrated in the system. These apps come pre-installed to provide a seamless experience without the need to connect your mobile device.

1 **Touch [ ] on the main menu.**

2 **Touch [Apps] on the sub menu.**

3 **Select the desired item.**

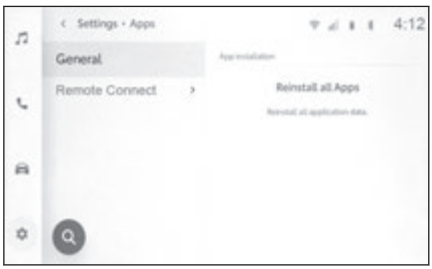

Setting	Description
[**General**]	Under some circumstances it is possible that the App may not be able to communicate and may require its memory to be cleaned out. The [**Reinstall all Apps**] will enable you to do this.
[**Remote Connect**]	For vehicles that are remote capable, you may use the remote feature from your mobile device to lock, unlock and many more features. When a mobile device requests a remote activation to a vehicle, you may select this feature and complete the authorization process.

3 Connecting a smartphone or communication device

3-1. Using the Bluetooth® function

Precautions when using Bluetooth® devices 96

Bluetooth® specifications and compatible profiles 99

Registering a Bluetooth® device from the multimedia system 100

Deleting a registered Bluetooth® device 104

Connecting with a Bluetooth® device 105

Setting a Bluetooth® device as a primary device 109

Setting a Bluetooth® device as a secondary device 110

3-2. Connecting to a Wi-Fi® network

Precautions when using Wi-Fi® devices ... 111

Connecting to a network using Wi-Fi® 114

Establishing a connection to Wi-Fi® Hotspot 117

3-3. Using Apple CarPlay and Android Auto

Precautions when using Apple CarPlay and Android Auto 120

Using Apple CarPlay with an unregistered smartphone 123

Using Apple CarPlay with a registered smartphone 126

Using Android Auto with an unregistered smartphone 129

Using Android Auto with a registered smartphone 132

When Apple CarPlay or Android Auto might be malfunctioning 135

Precautions when using Bluetooth® devices

Pay special attention to the following information when using a Bluetooth® device on the multimedia system.

INFORMATION

- The vehicle uses Bluetooth® communications on the 2.4GHz frequency band. Performance may vary depending on various factors.
- Simultaneous use of Wi-Fi® using the same 2.4GHz band wireless communication as Bluetooth® could cause mutual interference.
- Mutual interference between Bluetooth® and Wi-Fi® could cause issues such as garbled video, audio skipping, or reduced communication speed. The effect of interference will be reduced if a Bluetooth® device is connected. If a Bluetooth® device has been registered, connecting with the registered device could improve this issue. (Check the status icons to determine whether a Bluetooth® device is connected)
- Using a Bluetooth® cellular phone simultaneously with a wireless device could negatively affect communication for each.
- Connecting a Bluetooth® device via Bluetooth® will cause the battery of the cellular phone to deplete rapidly.
- Bluetooth® connections will be disconnected during emergency calls. Any disconnected Bluetooth® devices will be reconnected once the emergency call is finished.

⚠ WARNING

- For safety, the driver should not operate the cellular phone itself while driving when using hands-free calling.
- Stop the vehicle in a safe location prior to calling. If a call is received while driving, be sure to drive safely and keep the call short.

⚠ NOTICE

- Do not use a Bluetooth® device near the multimedia system. Coming too close could worsen sound quality or the connection.
- Do not leave a cellular phone inside the vehicle. The inside of the vehicle can become hot, which could cause the cellular phone to malfunction.

Users with pacemakers or other electrical medical devices

Observe the following precautions with regard to radio waves during Bluetooth® communication.

⚠ WARNING

- The vehicle antenna for Bluetooth® communication is built into the multimedia system.
- People with implantable cardiac pacemakers, cardiac resynchronization therapy-pacemakers or implantable cardioverter defibrillators should maintain a reasonable distance between themselves and the Bluetooth® antennas. The radio waves may affect the operation of such devices.
- Before using Bluetooth® devices, users of any electrical medical device other than implantable cardiac pacemakers, cardiac resynchronization therapy-pacemakers or implantable cardioverter defibrillators should consult the manufacturer of the device for information about its operation under the influence of radio waves. Radio waves could have unexpected effects on the operation of such medical devices.

When used simultaneously with Bluetooth® audio

- The following behaviors will occur if a Bluetooth®-compatible device (cellular phone) is used hands-free and simultaneously with Bluetooth® audio.
  - The Bluetooth® connection of the cellular phone may be disconnected.
  - There is possibility that background noise may exist during a hands-free phone call.
  - Hands-free call operation may lag.
- Audio may skip if the communication device selected for hands-free calling is changed during Bluetooth® audio playback.
- The portable device connection may be disconnected when transferring contact data. It will be reconnected once transfer is complete. (Reconnection may not be possible for some models)
- It may not be possible to make both a hands-free connection and audio connection, even for cellular phones that support both hands-free connections and audio connections.
- For a list of specific devices which operation has been confirmed on multimedia system, check with your Toyota dealer or the following website:https://www.toyota.com/connected-services in

the United States, https://www.toyotapr.com/serviciosconectados in Puerto Rico, and https://www.toyota.ca/toyota/en/about/connected-services in Canada.

Related Links

Precautions when using Wi-Fi® devices(P. 111)

Precautions for Bluetooth® audio playback(P. 183)

Precautions for hands-free calling(P. 188)

Status icons(P. 19)

Bluetooth® specifications and compatible profiles

The multimedia system supports the following specifications and compatible profiles. Operation is not guaranteed for all Bluetooth® devices.

■ Supported Bluetooth® specifications

Bluetooth® Core Specification Ver. 5.0

■ Compatible profiles

- HFP (Hands Free Profile)

  Supported: Ver.1.8

  This is a profile to allow hands-free phone calls using a cellular phone. It has outgoing and incoming call functions.

- PBAP (Phone Book Access Profile)

  Supported: Ver.1.2.3

  Profile for synchronizing data such as contact data and call history

- MAP (Message Access Profile)

  Supported: Ver.1.4.2

  This is a profile to use phone message functions.

- SPP (Serial Port Profile)

  Supported: Ver.1.2

  - Profile for converting Bluetooth®-equipped devices as virtual serial ports
  - Profile for linking smartphones

- A2DP (Advanced Audio Distribution Profile)

  Supported: Ver.1.3.2

  This is a profile to transmit stereo audio or high quality sound to the audio system.

- AVRCP (Audio/Video Remote Control Profile)

  Supported: Ver.1.6.2

  Profile for controlling audio remotely

Registering a Bluetooth® device from the multimedia system

A cellular phone or portable device must be registered in order to use hands-free calling or Bluetooth® audio. Once registration is complete, Bluetooth® will automatically be connected each time the multimedia system is started.

It's registered automatically as Bluetooth® device when Apple CarPlay/Android Auto is connected by USB.

If no Bluetooth® device is connected, the registration screen can also be displayed by pressing and holding the [ ] switch on the steering wheel.

INFORMATION

- A cellular phone can be registered as both a hands-free phone and Bluetooth® audio device.
- Up to 5 Bluetooth® devices can be registered. However, a maximum of 2 devices can be used as a hands-free phone. (Setting of a driver is required to connect 2 hands-free phones.)
- Refer to the Bluetooth® device's instruction manual for information on how to operate the Bluetooth® device.
- Registration will need to be repeated once for each Bluetooth® device if multiple Bluetooth® devices will be used.
- A PIN code is a verification code used when registering a Bluetooth® device to the multimedia system.
- Dialing may be locked out after connecting, depending on the cellular phone settings. Cancel the auto lock function on the cellular phone before use.
- If another device is registered while connected to a cellular phone or portable device, the connection to the portable device or cellular phone playing audio will be disconnected.
- For safety reasons, devices cannot be registered while driving.
- If Bluetooth® device registration cannot be completed, restart the Bluetooth® device.

1 **Touch [ ] from the main menu.**

2 **Touch [Bluetooth & Devices] on the sub menu.**

If no device is registered, proceed to Procedure 4.

3 Touch [Add another device].

While a device is connected to the multimedia system, the confirmation screen for disconnecting the device may be displayed. Disconnect the device to perform registration.

4 Touch [Search for devices].

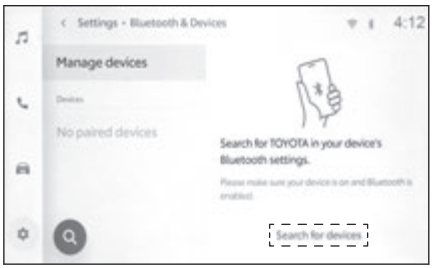

5 Touch the device to register from the main area.

- The Bluetooth® address may be displayed instead of the device name.
- Certain models of Bluetooth® devices may not be displayed in the device list, unless a certain screen is displayed on the Bluetooth® device. Refer to the Bluetooth® device's instruction manual for details.

6 Check that the displayed PIN code matches the PIN code displayed on the Bluetooth® device, and then touch [OK].

- Some Bluetooth® devices may need to be operated to complete registration.
- When an HFP supported Bluetooth® device is registered, that device is automatically set as the primary device if the driver does not have a primary device set.
- The Apple CarPlay or Android Auto settings may be displayed. The Apple CarPlay or Android Auto screen will be displayed if the use of either is enabled.
- A message indicating that connection is complete is displayed, and the name of the registered Bluetooth® device is displayed in the sub menu.
- If an operation failed screen is displayed, follow the operation instructions on the screen.

Related Links

Linking a User Profile(P. 46)
Changing and linking a User Profile(P. 54)

Precautions when using Apple CarPlay and Android Auto(P. 120)

Registering from a Bluetooth® device

If the Bluetooth® device cannot be found by searching with the multimedia system, register by searching for the multimedia system from the Bluetooth® device.

1 **Touch [⚙] from the main menu.**

2 **Touch [Bluetooth & Devices] on the sub menu.**

If no device is registered, proceed to Procedure 4.

3 **Touch [Add another device].**

While a device is connected to the multimedia system, the confirmation screen for disconnecting the device may be displayed. Disconnect the device to perform registration.

4 **Register the multimedia system from the Bluetooth® device to be used.**

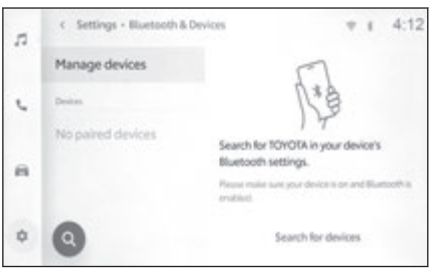

- Perform the operation according to the operating procedure of the Bluetooth® device.
- Be sure to display this Bluetooth® connection screen before performing registration on the Bluetooth® device.

5 **Check that the displayed PIN code matches the PIN code displayed on the Bluetooth® device, and then touch [OK].**

- Some Bluetooth® devices may need to be operated to complete registration.
- When an HFP supported Bluetooth® device is registered, that device is automatically set as the primary device if the driver does not have a primary device set.
- The Apple CarPlay or Android Auto settings may be displayed. The Apple CarPlay or Android Auto screen will be displayed if the use of either is enabled.
- A message indicating that connection is complete is displayed, and the name of the registered Bluetooth® device is displayed in the sub menu.
- If an operation failed screen is displayed, follow the operation instructions on the screen.

Related Links

Linking a User Profile(P. 46)
Changing and linking a User Profile(P. 54)

Deleting a registered Bluetooth® device

Registered Bluetooth® devices can be deleted.

1 **Touch [ ] from the main menu.**

2 **Touch [Bluetooth & Devices].**

3 **Touch the Bluetooth® device to be deleted from the sub menu.**

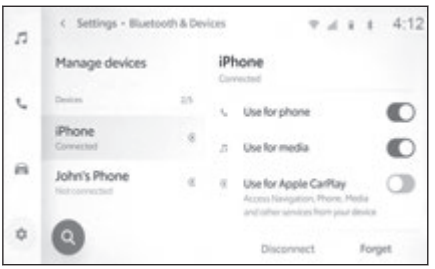

4 **Touch [Forget].**

A device that has been set as the primary device of another user cannot be deleted.

5 **Touch [Forget].**

INFORMATION

- A registered cellular phone cannot be deleted during an emergency call.
- It may not be possible to delete on the first try, depending on the status of the Bluetooth® device.

Related Links

Setting a Bluetooth® device as a primary device(P. 109)
Linking a User Profile(P. 46)
Changing and linking a User Profile(P. 54)

Connecting with a Bluetooth® device

Connection with a Bluetooth® device is required to use various function of the multimedia system. There are two connection methods, automatic and manual.

INFORMATION

- Refer to the Bluetooth® device's instruction manual for information on how to operate the Bluetooth® device.
- If multimedia system behavior is unstable when connecting a cellular phone, end the call and try connecting again.
- A connection cannot be made if Bluetooth® on the Bluetooth® device is not turned on.
- When connection of the Bluetooth® device is completed, it will be displayed at the top of the screen.
- While the Bluetooth® device is connected, the Bluetooth® connection status icon is displayed.
- The display area may illuminate and stay on while the power switch is turned on, depending on the model of cellular phone. If this occurs, turn illumination off on the cellular phone. (For information on setting, refer to the cellular phone instruction manual)
- The Bluetooth® function cannot be used on the device connected as Apple CarPlay.
- The Bluetooth® function except the hands-free function cannot be used on the device connected as Android Auto.

Bluetooth® reconnection

If a Bluetooth® connection that was once established is disconnected while the power switch is turned on, a reconnection will be automatically attempted.

Number of Bluetooth® device connections

- When a driver is set

  Up to two hands-free phones and one audio device will be connected automatically. (The hands-free phone and audio device can also be set as the same device.)

- When a driver is not set

Up to one hands-free phone and one audio device will be connected automatically. (The hands-free phone and audio device can also be set as the same device.)

INFORMATION

- Try connecting manually if reconnection fails.
- If Apple CarPlay is connected, you may not be able to reconnect the Bluetooth® connection.

Related Links

Status icons(P. 19)
Linking a User Profile(P. 46)
Changing and linking a User Profile(P. 54)
Manually connecting Bluetooth® devices(P. 107)

Automatically connecting Bluetooth® devices

The multimedia system will automatically connect to Bluetooth® devices in the set priority order each time the power switch is turned from off to on.*1

- When a driver is set

  Automatically connects in order of the primary device, secondary device, and then devices in order of most recent connection.

  Up to two hands-free phones and one audio device will be connected automatically. (The hands-free phone and audio device can also be set as the same device.)

- When a driver is not set

  Automatically connects in order of most recent connection.

Up to one hands-free phone and one audio device will be connected automatically. (The hands-free phone and audio device can also be set as the same device.)

INFORMATION

- Try connecting manually if reconnection fails.

*1 : Devices that were manually disconnected such as by touching the [**Disconnect**] will not be automatically connected.

- The Bluetooth® device may need to be operated, depending on the model of Bluetooth® device.

Related Links

Setting a Bluetooth® device as a primary device(P. 109)
Setting a Bluetooth® device as a secondary device(P. 110)
Linking a User Profile(P. 46)
Changing and linking a User Profile(P. 54)

Manually connecting Bluetooth® devices

In order to connect another Bluetooth® device, or if automatic connection fails, it is possible to connect to registered Bluetooth® devices.

1 **Touch [⚙] from the main menu.**

2 **Touch [Bluetooth & Devices] from the sub menu.**

The device search screen will display on the multimedia system if no Bluetooth® devices are registered. Register the Bluetooth® device.

3 **Touch the Bluetooth® device to connect to from the sub menu.**

If the Bluetooth® device to connect to is not listed in the sub menu, register the Bluetooth® device.

4 **Turn on the function (phone, audio, etc.) that you want to connect from the main area.**

A confirmation screen may be displayed if another device is already connected.

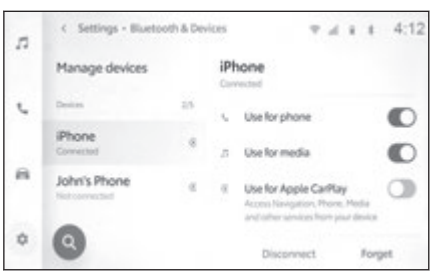

INFORMATION

It may not be possible to connect on the first try, depending on the status of the Bluetooth® device. If this occurs, try connecting again after a while.

Related Links

Registering a Bluetooth® device from the multimedia system(P. 100)

Disconnecting Bluetooth® devices

Connected Bluetooth® devices can be disconnected from the multimedia system.

1. **Touch [ ] from the main menu.**
2. **Touch [Bluetooth & Devices] from the sub menu.**
3. **Touch the Bluetooth® device to be disconnected from the sub menu.**
4. **Touch [Disconnect] from the main area.**

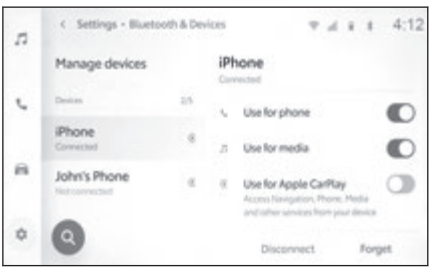

Setting a Bluetooth® device as a primary device

Setting a Bluetooth® device as the primary device makes it the first to be connected during automatic connection.

- A Bluetooth® device that supports HFP must be connected to the multimedia system.
- Registration of a driver is required to set a device as the primary device.

INFORMATION

A Bluetooth® device set as the primary device of another user cannot be set as the primary device.

1. **Touch [ ] from the main menu.**
2. **Touch [Personal info].**
3. **Touch [Link devices] from the main area.**

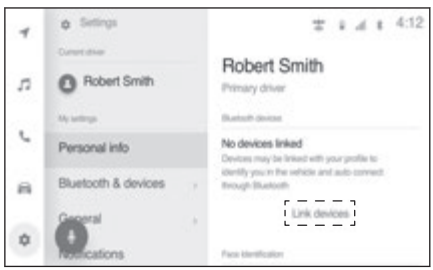

The device search screen will be displayed if there is no Bluetooth® device that can be set as the primary device. Search for the Bluetooth® device to set and newly register it to the multimedia system. After the device is newly registered, it can be set as the primary device.

4. **Select the Bluetooth® device to be set as the primary device.**

Disconnect the currently connected Bluetooth® device, then connect the primary device and secondary device.

Related Links

Automatically connecting Bluetooth® devices(P. 106)
Setting Bluetooth® devices(P. 89)
Linking a User Profile(P. 46)
Changing and linking a User Profile(P. 54)
Registering a Bluetooth® device from the multimedia system(P. 100)

Setting a Bluetooth® device as a secondary device

By setting a Bluetooth® device as a secondary device, it will be recognized as a secondary device when connected.

- The same Bluetooth® device cannot be set as a primary device and secondary device for a driver.
- A Bluetooth® device that supports HFP must be connected to the multimedia system.
- Registration of a driver is required to set a device as the secondary device.

1 **Touch [ ] from the main menu.**

2 **Touch [Bluetooth & Devices] from the sub menu.**

The device search screen will display if no Bluetooth® devices are registered. Register a Bluetooth® device.

3 **Touch the Bluetooth® device to be set as the secondary device.**

If the Bluetooth® device to be set is not listed, register the Bluetooth® device.

4 **Touch [Set as secondary device] from the main area.**

This will change to a cancel switch if the device is already set as a secondary device.

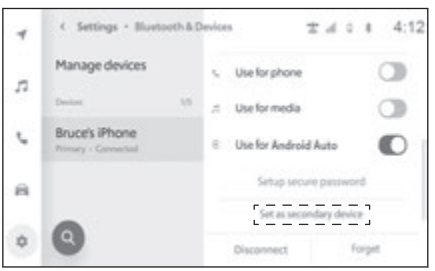

Related Links

Automatically connecting Bluetooth® devices(P. 106)
Setting Bluetooth® devices(P. 89)
Linking a User Profile(P. 46)
Changing and linking a User Profile(P. 54)

Precautions when using Wi-Fi® devices

Pay special attention to the following information when using the Wi-Fi® of the multimedia system.

■ Users with pacemakers or other electrical medical devices

Observe the following precautions with regard to radio waves during Wi-Fi® communication.

⚠ WARNING

- Use Wi-Fi® devices only when safe and legal to do so.
- The vehicle antenna for Wi-Fi® communication is built into the multimedia system.
- People with implantable cardiac pacemakers, cardiac resynchronization therapy-pacemakers or implantable cardioverter defibrillators should maintain a reasonable distance between themselves and the Wi-Fi® antennas.

  The radio waves may affect the operation of such devices.
- Before using Wi-Fi® devices, users of any electrical medical device other than implantable cardiac pacemakers, cardiac resynchronization therapy-pacemakers or implantable cardioverter defibrillators should consult the manufacturer of the device for information about its operation under the influence of radio waves.

  Radio waves could have unexpected effects on the operation of such medical devices.

■ Using Wi-Fi® and Bluetooth® simultaneously

The vehicle uses 2.4GHz Wi-Fi® which is the same frequency used by Bluetooth®. Using both Wi-Fi® and Bluetooth® simultaneously could cause interference to occur with each other which can result in poor performance or connection issues.

■ Things to know about Wi-Fi®

INFORMATION

- Performance may vary depending on various environmental and electrical factors.

- Use this function when connecting to a portable device. Connections to devices other than portable devices may be disconnected, depending on the environment.
- Leaving the Wi-Fi® area will disconnect communication.
- Leaving the DCM area will disconnect Wi-Fi® Hotspot function communication.
- If a connected device is taken out of the Wi-Fi® connection area, the connection will be severed.
- If the vehicle is driven out of the cellular communication coverage area, connecting to the internet via the Wi-Fi® Hotspot will not be possible.
- If a Bluetooth® device is used while a device is connected using the Wi-Fi® Hotspot function, the communication speed may decrease.
- Depending on the environment in which the access point is used, the communication speed may be low or communication may not be possible.
- If the vehicle is near a radio antenna, radio station or other source of strong radio waves and electrical noise, communication may be slow or impossible.
- The communication speed may drop or it even may become impossible to use this service in certain usage environments. (Due to factors such as the wireless antenna location and any wireless devices being used nearby.)

Compatible Wi-Fi® communication protocols

IEEE 802.11b/g/n (2.4GHz)

IEEE 802.11a/n/ac (5GHz)

Compatible security protocols

- WEP
- WPA™
- WPA2™
- WPA3™

Related Links

Precautions when using Bluetooth® devices(P. 96)

Status icons(P. 19)

Changing Wi-Fi® setting(P. 85)

Setting Wi-Fi® Hotspot(P. 87)
Functional overview(P. 222)

Connecting to a network using Wi-Fi®*1

The multimedia system can be connected to the Internet by connecting to a Wi-Fi® network.

INFORMATION

- The reception level is displayed at the top of the screen.
- This function cannot be used while the Wi-Fi® Hotspot is on. Also, this function cannot be used while Apple CarPlay or Android Auto is connected wirelessly.
- Some smartphone models may require establishing a connection each time.
- If networks are detected while the Wi-Fi® function is on, automatic connection will prioritize connecting to the network with the most recent connection.

Related Links

Changing Wi-Fi® setting(P. 85)

Connecting to Wi-Fi® using a smartphone

Refer to the following operation example to establish a Wi-Fi® connection using a smartphone that supports Wi-Fi® tethering. For details on setting up tethering, refer to documents such as the instruction manual for the smartphone. Some smartphone models may require establishing a connection each time.

1. **Touch [ ] from the main menu.**
2. **Touch [Wi-Fi] from the sub menu.**
3. **Touch [Wi-Fi] from the sub menu.**
4. **Set [Wi-Fi] in the main area to on.**
   - A message may be displayed depending on the multimedia system settings. Perform the operation according to the screen guidance.

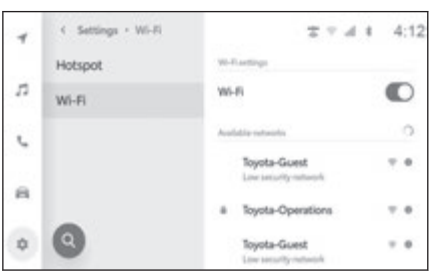

*1 : This function is not available in some regions.

- Turning on [**Wi-Fi**] will display nearby networks that are available.

5 Select the name of the network that matches the name being broadcasted by the smartphone.

- Network name may display as duplicate when more than one MAC address shares the same network.
- A maximum of 30 networks can be displayed. The list is automatically updated every six seconds.
- If there are devices using the same network name (Network SSID), it cannot identify which device to use. Use different network names (Network SSIDs) if using multiple devices.
- No selections can be made while driving.

6 Enter the corresponding password for this network.

- If no password is set, the connection will be made after selecting the network.
- If networks are detected with the automatic connection setting on, they will be connected to automatically.

INFORMATION

The network connection history retains up to 20 items, deleting the oldest when a new one is saved.

Establishing a Wi-Fi® connection to an available network

Connect to the Internet from a nearby network using Wi-Fi®.

Confirm the password of the network to be used in advance.

1 Touch [ ] from the main menu.

2 Touch [Wi-Fi] from the sub menu.

3 Touch [Wi-Fi] from the sub menu.

4 Set [Wi-Fi] in the main area to on.

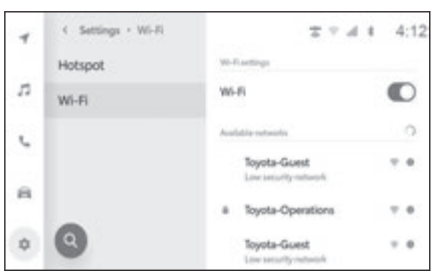

- A message may be displayed depending on the multimedia system settings. Perform the operation according to the screen guidance.
- Turning on [**Wi-Fi**] will display nearby networks that are available.

5 Touch the network to be connected to from [Available networks] in the main area.

- Network name may display as duplicate when more than one MAC address shares the same network.
- A maximum of 30 networks can be displayed. The list is automatically updated every six seconds.
- If there are devices using the same network name (Network SSID), it cannot identify which device to use. Use different network names (Network SSIDs) if using multiple devices.
- No selections can be made while driving.
- Touch [ⓘ] for the applicable network to check network details.

6 Enter the corresponding password for this network.

- If no password is set, the connection will be made after selecting the network.
- If networks are detected with the automatic connection setting on, they will be connected to automatically.

INFORMATION

The network connection history retains up to 20 items, deleting the oldest when a new one is saved.

Disconnecting Wi-Fi®

Wi-Fi® can be disconnected by turning off the Wi-Fi® function.

1 Touch [⚙] from the main menu.

2 Touch [Wi-Fi] from the sub menu.

3 Touch [Wi-Fi] from the sub menu.

4 Set [Wi-Fi] in the main area to off.

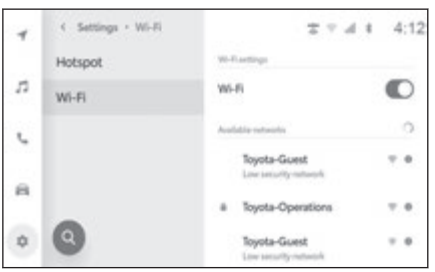

Establishing a connection to Wi-Fi® Hotspot*1

The Wi-Fi® Hotspot function can be used to set the Wi-Fi® access point and connect to a Wi-Fi® device.

Use of this function requires a Wi-Fi® Connect subscription that is provided by Wi-Fi service provider.

Contact your Toyota dealer for details.

INFORMATION

- This function cannot be used while the Wi-Fi® function is on.
- A total of 10 devices (5 using 2.4 GHz and 5 using 5.0 GHz) can be connected. Recommend connecting up to 5 devices at a time for optimum performance. If connected to Apple CarPlay or Android Auto over wireless, the limit will be 5 devices using 2.4GHz.

1. **Turn on the Wi-Fi® function of the Wi-Fi® device.**
2. **Touch [ ] from the main menu.**
3. **Touch [Wi-Fi] from the sub menu.**
4. **Touch [Hotspot] from the sub menu.**
5. **Turn on [Hotspot] in the main area.**

   A message may be displayed depending on the multimedia system settings. Perform the operation according to the screen guidance.

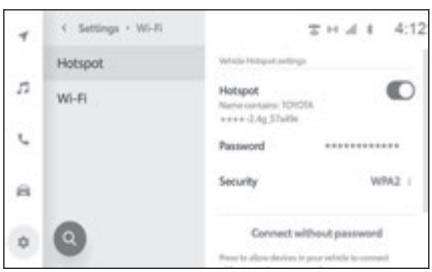

6. **Connect to Wi-Fi® Hotspot of the multimedia system from the Wi-Fi® device.**
   - Refer to the Wi-Fi® device's instruction manual on how to connect using the Wi-Fi® device.
   - The network name will be displayed under the Hotspot in the main area.
   - The network password will be displayed in the main area. If the password is long, some of the characters may be omitted from the display. Touch the screen to check on the password edit screen.

*1 : This function is not available in some regions.

Related Links

Setting Wi-Fi® Hotspot(P. 87)
Functional overview(P. 222)

Connecting to Wi-Fi® Hotspot using easy setup

If the Wi-Fi® device is compatible with Wi-Fi Protected Setup™, connecting a device is even easier

1 **Touch [ ] from the main menu.**

2 **Touch [Wi-Fi] from the sub menu.**

3 **Touch [Hotspot] from the sub menu.**

4 **Turn on [Hotspot] in the main area.**

A message may be displayed depending on the multimedia system settings. Perform the operation according to the screen guidance.

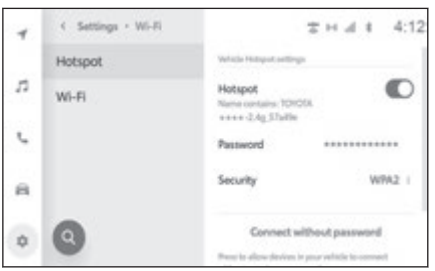

5 **Touch [Connect without password] from the main area.**

The multimedia system will begin accepting connections with easy setup.

- No selections can be made while driving.
- This feature is for WPS supported devices only.
- This cannot be selected when the maximum number of devices are already connected.

6 **Operate the Wi-Fi® device to establish a connection.**

- Refer to the Wi-Fi® device's instruction manual on how to connect using the Wi-Fi® device.
- A connection failed message will be displayed if the acceptance time is exceeded.

Disconnecting Wi-Fi® Hotspot

Wi-Fi® Hotspot can be disconnected by turning off the Wi-Fi® function.

1 **Touch [ ] from the main menu.**

2 **Touch [Wi-Fi] from the sub menu.**

3 **Touch [Hotspot] from the sub menu.**

4 **Turn off [Hotspot] in the main area.**

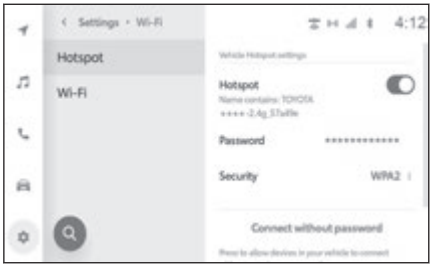

Precautions when using Apple CarPlay and Android Auto

Apple CarPlay and Android Auto allow for some applications (such as map, phone, and music applications) to be used by the multimedia system. While connected to Apple CarPlay or Android Auto, supported applications will display. Pay special attention to the following information when using Apple CarPlay or Android Auto.

To use Android Auto in your car, install the Android Auto app from Google's Play Store.

■ Compatible devices

- Apple iPhone devices that supports Apple CarPlay. (iOS Ver. 13.3 or later)

  For details, refer to https://www.apple.com/ios/carplay/.*1

- Android devices that supports Android Auto.

  For details, refer to https://www.android.com/auto/.*1

⚠ WARNING

For safety reasons, drivers should not operate the smartphone itself while driving.

⚠ NOTICE

- Do not leave the smartphone inside the vehicle. The inside of the vehicle can become hot, which could cause the smartphone to malfunction.
- Do not push down on or subject the smartphone to unnecessary pressure while it is connected. The smartphone or port may be damaged.
- Keep the USB Type-C port free of foreign matter. The smartphone or port may be damaged.

INFORMATION

- For USB connections, use a data USB Type-C cable provided by the phone manufacturer.
- Some system button functions will change while connected to Apple CarPlay or Android Auto.
- When connected via Apple CarPlay/Android Auto, some related functions like Bluetooth® audio and phone will be managed by Apple CarPlay/Android Auto.

*1 : Operation is not guaranteed.

- The guidance volume can be changed in the [**Sound & Media**] settings. The volume adjustment of the audio system can also be changed.
- While Apple CarPlay or Android Auto of a device is connected, Apple CarPlay or Android Auto of a different device cannot be used.
- Apple CarPlay/Android Auto is an application developed by Apple Inc/ Google LLC. Its functions and services may be terminated or changed without notice depending on the connected device's operation system, hardware and software, or due to changes in Apple CarPlay/Android Auto specifications.
- For applications that support Apple CarPlay or Android Auto, refer to the respective website.
- While using Apple CarPlay or Android Auto, vehicle and user information such as the location and vehicle speed will be shared with the application publisher and cellular phone service provider.
- Downloading and using an application signifies your consent with its terms of use.
- Data is sent over the Internet and may result in charges being incurred. For information on data rates, contact the cellular phone service provider.
- Some functions including music playback may be restricted, depending on the application.
- Each function is an application provided by its respective company, and may be changed or suspended without prior notice. For details, refer to the website for the respective function.
- If the vehicle's navigation system is being used during route guidance and a new route is set using the Apple CarPlay or Android Auto map app, route guidance using the vehicle's navigation system will stop. If the Apple CarPlay or Android Auto map app is being used during route guidance and a new route is set using the vehicle's navigation system, route guidance using the Apple CarPlay or Android Auto map app will stop.
- Devices connected via Apple CarPlay cannot use Bluetooth® functions.
- Devices connected via Android Auto cannot use Bluetooth® functions other than hands-free calling.
- If the USB Type-C cable is unplugged while connected via USB, Apple CarPlay or Android Auto will stop operating. Audio output will stop and the screen will switch to the multimedia system screen.

- Even if Android Auto is disconnected, the hands-free phone system can be used because the phone will still be connected.

Related Links

Changing sound and media settings(P. 66)
Audio system ON/OFF and volume adjustment(P. 31)
Precautions for playback of iPod/iPhone(P. 173)
Precautions for playback of Apple CarPlay(P. 176)
Precautions for playback of Android Auto(P. 179)
Precautions when using Bluetooth® devices(P. 96)
Precautions when using Wi-Fi® devices(P. 111)
Precautions for Bluetooth® audio playback(P. 183)

Using Apple CarPlay with an unregistered smartphone

Apple CarPlay can be used by connecting an unregistered smartphone to the multimedia system. The procedure is different for registered smartphones.

Related Links

Using Apple CarPlay with a registered smartphone(P. 126)

Using Apple CarPlay with a USB connection

Apple CarPlay can be used by connecting a smartphone to the multimedia system using a data USB Type-C cable.

1 **Enable Siri from your smartphone's settings menu.**

2 **Connect the smartphone to the USB Type-C port.**

The Apple CarPlay home screen is displayed.

- It may take around three to six seconds to return to the original screen, depending on the smartphone being connected.
- If guidance is displayed on the smartphone screen, follow those operation instructions.

3 **Operate Apple CarPlay.**



To go to the Apple CarPlay menu, touch [ ].

To switch between Apple CarPlay and other features, touch the icon on the main menu.

To use the features built in the vehicle, touch [ ] on the Apple CarPlay app screen.

[ ]/[ ]

Switch the screen display.

Touching and holding this will start Siri.

[ ]/[ ]

Show or hide the main menu of the multimedia system screen.

INFORMATION

- While Apple CarPlay is connected, press and hold the [ ] switch on the steering to start Siri. To cancel Siri, perform a short press of the [ ] switch on the steering.
- While Apple CarPlay is connected, speaking the Siri wake word will start Siri.

  The wake word function of Siri can only be used when the language is set to English. Also, the connected device must have iOS version 14.3 or later.
- If wireless connection is set to be used on the smartphone when registered via USB connection, the device can be wirelessly connected on the next attempt.

Related Links

Connecting a device via the USB Type-C port(P. 34)

Changing the voice control settings(P. 70)

Using Apple CarPlay with wireless connection

Apple CarPlay can be connected to the multimedia system wirelessly using vehicle's wireless connection capability.

1. **Enable Siri from your smartphone's settings menu.**
2. **Touch [ ] from the main menu.**
3. **Touch [Bluetooth & Devices].**
   - The device search screen will be displayed if there is no smartphone registered to the multimedia system. Proceed to Procedure **5**.
4. **Touch [Add another device].**
5. **Touch [Search for devices].**
6. **Select the smartphone to register.**
7. **Check that the displayed PIN code matches the PIN code displayed on the smartphone, and then touch [OK].**
   - Perform the operation according to the guidance on the screen.
8. **Touch [Yes], if add another Apple CarPlay settings are displayed.**

   The Apple CarPlay home screen is displayed.

- It may take around three to six seconds to return to the original screen, depending on the smartphone being connected.
- If an operation failed screen is displayed, follow the operation instructions on the screen.
- If guidance is displayed on the smartphone screen, follow those operation instructions.

9 Operate Apple CarPlay.



To go to the Apple CarPlay menu, touch [ ].

To switch between Apple CarPlay and other features, touch the icon on the main menu.

To use the features built in the vehicle, touch [ ] on the Apple CarPlay app screen.

[ ]/[ ]

Switch the screen display.

Touching and holding this will start Siri.

[ ]/[ ]

Show or hide the main menu of the multimedia system screen.

INFORMATION

- While Apple CarPlay is connected, press and hold the [ ] switch on the steering to start Siri. To cancel Siri, perform a short press of the [ ] switch on the steering.
- While Apple CarPlay is connected, speaking the Siri wake word will start Siri.

  The wake word function of Siri can only be used when the language is set to English. Also, the connected device must have iOS version 14.3 or later.

Related Links

Changing the voice control settings(P. 70)

Using Apple CarPlay with a registered smartphone

Apple CarPlay can be used by connecting a registered smartphone to the multimedia system. The procedure is different for unregistered smartphones.

Related Links

Using Apple CarPlay with an unregistered smartphone(P. 123)

Using Apple CarPlay with a USB connection

Apple CarPlay can be used by connecting a smartphone to the multimedia system using a data USB Type-C cable.

● Check that your cellular phone is connected to multimedia system.

1 **Enable Siri from your smartphone's settings menu.**

2 **Connect the smartphone to the USB Type-C port.**

The Apple CarPlay home screen is displayed.

- ● It may take around three to six seconds to return to the original screen, depending on the smartphone being connected.
- ● If an operation failed screen is displayed, follow the operation instructions on the screen.
- ● If guidance is displayed on the smartphone screen, follow those operation instructions.
- ● If the Apple CarPlay home screen is not displayed, check the following.
  - Touch [ ] from the main menu.
  - If [ ] of the main menu is not displayed, select the smartphone to use with Apple CarPlay and set [**Use for Apple CarPlay**] to ON.
  - Perform the operation according to the guidance on the screen.

3 **Operate Apple CarPlay.**

To go to the Apple CarPlay menu, touch [ ].

To switch between Apple CarPlay and other features, touch the icon on the main menu.

To use the features built in the vehicle, touch [ ] on the Apple CarPlay app screen.

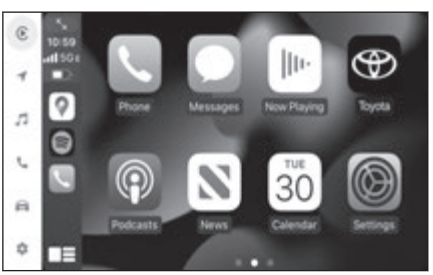

[ ]/[ ]

Switch the screen display.

Touching and holding this will start Siri.

[ ]/[ ]

Show or hide the main menu of the multimedia system screen.

INFORMATION

- While Apple CarPlay is connected, press and hold the [ ] switch on the steering to start Siri. To cancel Siri, perform a short press of the [ ] switch on the steering.
- While Apple CarPlay is connected, speaking the Siri wake word will start Siri.

  The wake word function of Siri can only be used when the language is set to English. Also, the connected device must have iOS version 14.3 or later.

Related Links

Connecting a device via the USB Type-C port(P. 34)

Changing the voice control settings(P. 70)

Setting Bluetooth® devices(P. 89)

Using Apple CarPlay with wireless connection

Apple CarPlay can be connected to the multimedia system wirelessly using vehicle's wireless connection capability.

- Check that your smartphone is connected to multimedia system.

1. **Enable Siri from your smartphone's settings menu.**
2. **Touch [ ] from the main menu.**
3. **Touch [Bluetooth & Devices].**
4. **Select the smartphone to use with Apple CarPlay and set [Use for Apple CarPlay] to ON.**

   The Apple CarPlay home screen is displayed.

   - It may take around three to six seconds to return to the original screen, depending on the smartphone being connected.
   - If an operation failed screen is displayed, follow the operation instructions on the screen.

- If guidance is displayed on the smartphone screen, follow those operation instructions.
- If the Apple CarPlay home screen is not displayed, Touch [ ] from the main menu.

5 Operate Apple CarPlay.



To go to the Apple CarPlay menu, touch [ ].

To switch between Apple CarPlay and other features, touch the icon on the main menu.

To use the features built in the vehicle, touch [ ] on the Apple CarPlay app screen.

[ ]/[ ]

Switch the screen display.

Touching and holding this will start Siri.

[ ]/[ ]

Show or hide the main menu of the multimedia system screen.

INFORMATION

- While Apple CarPlay is connected, press and hold the [ ] switch on the steering to start Siri. To cancel Siri, perform a short press of the [ ] switch on the steering.
- While Apple CarPlay is connected, speaking the Siri wake word will start Siri.

  The wake word function of Siri can only be used when the language is set to English. Also, the connected device must have iOS version 14.3 or later.

Related Links

Changing the voice control settings(P. 70)

Setting Bluetooth® devices(P. 89)

Using Android Auto with an unregistered smartphone

Android Auto can be used by connecting an unregistered smartphone to the multimedia system. The procedure is different for registered smartphones.

Related Links

Using Android Auto with a registered smartphone(P. 132)

Using Android Auto with a USB connection

Android Auto can be used by connecting a smartphone to the multimedia system using a data USB Type-C cable.

1 **Confirm that the Android Auto application is installed on the smartphone to connect.**

2 **Connect the smartphone to the USB Type-C port.**

The Android Auto home screen is displayed.

- It may take around three to six seconds to return to the original screen, depending on the smartphone being connected.
- If guidance is displayed on the smartphone screen, follow those operation instructions.

3 **Operate Android Auto.**

Applications that support Android Auto can be used by touching the application.

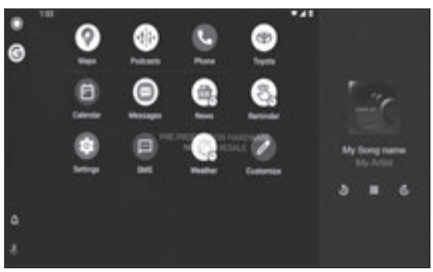

[ ]

Displays the multimedia system screen.

To display the Android Auto home screen again, touch [ ] from the main menu.

[ ]

Start Google Assistant™.

INFORMATION

While Android Auto is connected, press and hold the [ ] switch on the steering to start Google Assistant™. To cancel Google Assistant™, perform a short press of the [ ] switch on the steering.

Related Links

Connecting a device via the USB Type-C port(P. 34)

Using Android Auto with wireless connection

Android Auto can be connected to the multimedia system wirelessly using vehicle's wireless connection capability.

1 **Confirm that the Android Auto application is installed on the smartphone to connect.**

2 **Touch [ ] from the main menu.**

3 **Touch [Bluetooth & Devices].**

The device search screen will be displayed if there is no smartphone registered to the multimedia system. Proceed to Procedure **5**.

4 **Touch [Add another device].**

5 **Touch [Search for devices].**

6 **Select the smartphone to register.**

7 **Check that the displayed PIN code matches the PIN code displayed on the smartphone, and then touch [OK].**

- Perform the operation according to the guidance on the screen.

8 **If Android Auto settings are displayed, touch [Yes].**

The Android Auto home screen is displayed.

- It may take around three to six seconds to return to the original screen, depending on the smartphone being connected.
- If an operation failed screen is displayed, follow the operation instructions on the screen.

9 **Operate Android Auto.**



Applications that support Android Auto can be used by touching the application.

[ ]

Displays the multimedia system screen.

To display the Android Auto home screen again, touch [ ] from the main menu.

[ ]

Start Google Assistant™.

INFORMATION

While Android Auto is connected, press and hold the [ ] switch on the steering to start Google Assistant™. To cancel Google Assistant™, perform a short press of the [ ] switch on the steering.

Using Android Auto with a registered smartphone

Android Auto can be used by connecting a registered smartphone to the multimedia system. The procedure is different for unregistered smartphones.

Related Links

Using Android Auto with an unregistered smartphone(P. 129)

Using Android Auto with a USB connection

Android Auto can be used by connecting a smartphone to the multimedia system using a data USB Type-C cable.

● Check that your smartphone is connected to multimedia system.

1 **Confirm that the Android Auto application is installed on the smartphone to connect.**

2 **Connect the smartphone to the USB Type-C port.**

The Android Auto home screen is displayed.

- ● It may take around three to six seconds to return to the original screen, depending on the smartphone being connected.
- ● If an operation failed screen is displayed, follow the operation instructions on the screen.
- ● If guidance is displayed on the smartphone screen, follow those operation instructions.
- ● If the Android Auto home screen is not displayed, check the following.
  - • Touch [ ] from the main menu.
  - • If [ ] of the main menu is not displayed, select the smartphone to use with Android Auto and set [**Use for Android Auto**] to ON.
  - • Perform the operation according to the guidance on the screen.

3 **Operate Android Auto.**

Applications that support Android Auto can be used by touching the application.

[ ]

Displays the multimedia system screen.



To display the Android Auto home screen again, touch [ ] from the main menu.

[ ]

Start Google Assistant™.

INFORMATION

While Android Auto is connected, press and hold the [ ] switch on the steering to start Google Assistant™. To cancel Google Assistant™, perform a short press of the [ ] switch on the steering.

Related Links

Connecting a device via the USB Type-C port(P. 34)

Setting Bluetooth® devices(P. 89)

Using Android Auto with wireless connection

Android Auto can be connected to the multimedia system wirelessly using vehicle's wireless connection capability.

● Check that your smartphone is connected to multimedia system.

1 **Confirm that the Android Auto application is installed on the smartphone to connect.**

2 **Touch [ ] from the main menu.**

3 **Touch [Bluetooth & Devices].**

4 **Select the smartphone to use with Android Auto and set [Use for Android Auto] to ON.**

The Android Auto home screen is displayed.

- It may take around three to six seconds to return to the original screen, depending on the smartphone being connected.
- If an operation failed screen is displayed, follow the operation instructions on the screen.
- If guidance is displayed on the smartphone screen, follow those operation instructions.
- If the Android Auto home screen is not displayed, touch [ ] from the main menu.

5 Operate Android Auto.



Applications that support Android Auto can be used by touching the application.

[ ]

Displays the multimedia system screen.

[ ]

Start Google Assistant™.

INFORMATION

While Android Auto is connected, press and hold the [ ] switch on the steering to start Google Assistant™. To cancel Google Assistant™, perform a short press of the [ ] switch on the steering.

Related Links

Setting Bluetooth® devices(P. 89)

When Apple CarPlay or Android Auto might be malfunctioning

If having trouble with Apple CarPlay or Android Auto, check the following table first.

Symptom	Solution
Apple CarPlay or Android Auto does not start.	Confirm that the smartphone being connected supports Apple CarPlay or Android Auto. Confirm that Apple CarPlay or Android Auto is enabled on the smartphone. Confirm that Apple CarPlay or Android Auto is enabled on the smartphone. For details, refer to the following URL. ● Apple CarPlay: https://www.apple.com/ios/carplay/ ● Android Auto: https://www.android.com/auto/
	Confirm that the Apple CarPlay or Android Auto function on the registered smartphone is turned on in the multimedia system.
	If connecting with a USB Type-C cable, confirm that the USB Type-C cable is securely connected to the smartphone and the USB Type-C port. Connect the smartphone directly to the USB Type-C port. Do not use a USB hub. Make sure the correct USB Type-C port is used to connect Apple CarPlay and Android Auto. USB Type-C port used exclusively for charging cannot be used for smartphone apps. Wireless charger used for wireless charging will not start wireless Apple CarPlay or wireless Android Auto connection. For a wireless connection, check the following items. ● Confirm that the smartphone can be connected via Bluetooth® to the multimedia system. ● Confirm that the smartphone is set to be able to use Wi-Fi®.

Symptom	Solution
Apple CarPlay or Android Auto does not start.	For Apple CarPlay: Confirm that the Lightning cable being used is Apple-certified. Confirm that Siri is enabled. The smartphone linking function cannot be used with a charging-only USB Type-C cable. Use a cable capable of transferring data. Some cables may not be supported. Recommended USB Type-C cable requirements are listed below. ● iPhone: Use an official Apple USB Type-C cable or a USB Type-C cable that has been Apple MFi certified. ● Android: Use a cable that is 1.8 m or shorter, and do not use an extension cable. ● Use a cable displaying the USB logo . If the smartphone linking function worked previously but no longer works, replacing the USB Type-C cable may resolve the issue.
	After checking all of the above, connect Apple CarPlay or Android Auto.
When an Apple CarPlay/Android Auto connection is established and a video is being played, the video is not displayed, but audio is output through the system.	As the system is not designed to play video through Apple CarPlay/Android Auto, this is not a malfunction.
Audio is not outputted.	The volume of the multimedia system may be muted or set too low. Increase the volume on the multimedia system.
	Make sure Apple supported apps are used for Apple CarPlay and Google supported apps are used for Android Auto. Playing music from web browser will lead to no or improper audio output.

Symptom	Solution
The screen flickers and audio is noisy.	Check whether the USB Type-C cable connected to the multimedia system is damaged. To check whether there is internal damage to the USB Type-C cable, connect the smartphone to another system such as a PC, then confirm that charging starts and that it is recognized by the system.
	Replace the USB Type-C cable with another cable.
The map display cannot be enlarged or shrunk using the Apple CarPlay map app.	Pinch operations are not supported for the Apple CarPlay map app.
The Apple CarPlay screen is shown in the center and does not fill up the whole display.	Full-screen display is supported on iOS Ver. 10 or later. Update to the latest iOS version
During Apple CarPlay music app playback, if an app that is not compatible with Apple CarPlay(1) is started on the iPhone and audio is output and then the volume is changed on the multimedia system, the audio of the incompatible application stops and the system resumes playback on the original music application.	This operation is in accordance with the specifications of the multimedia system, and is not a malfunction.

Symptom	Solution
During audio playback on the multimedia system (such as FM), if interrupt audio is output from an app that is not compatible with Apple CarPlay(1), the system does not return to the original audio source.	This operation is in accordance with the specifications of the multimedia system, and is not a malfunction. Manually change the audio source. Alternatively, avoid using apps that are not compatible with Apple CarPlay(1). Some navigation apps are compatible beginning with iOS 12. Update iOS and apps to the latest versions.
While using Apple CarPlay, the route guidance arrow and turn-by-turn navigation are not displayed on the multi-information display.	This function may not be displayed depending on the multi-information display specifications or the map application being used.
While using Android Auto, the route guidance arrow is not displayed on the multi information display.	
While using Android Auto, turn-by-turn navigation is not displayed on the multi information display or the multimedia system screen.	This is not a malfunction as display of these items is not possible with this function.
While using Android Auto, hands-free call audio cannot be heard from the vehicle's speakers.	End current call. Disconnect the USB Type-C cable from the smartphone and try using hands-free calling. Check whether audio can be heard now.
	Increase the volume on the multimedia system and check whether hands-free call audio can be heard. Try using another smartphone. Check whether audio can be heard now.
The phone was connected after Android Auto was stopped.	This operation is in accordance with the specifications of the multimedia system, and is not a malfunction.

(1) Apps that are not compatible with Apple CarPlay are the apps installed on an iPhone that are not displayed in the app list on the Apple CarPlay screen.

Related Links

Setting Bluetooth® devices(P. 89)
Connecting a device via the USB Type-C port(P. 34)
Connecting with a Bluetooth® device(P. 105)
Audio system ON/OFF and volume adjustment(P. 31)
Changing sound and media settings(P. 66)
Notes for operating the touch screen(P. 22)

4 Navigation

4-1. Navigation

Cloud navigation 142

4-2. Map information

Map options screen ... 143

Information displayed on the map screen ... 144

4-3. Searching for a destination

Destination search screen 145

Destination search result list screen 148

POI suggestion 149

Destination Assist 150

4-4. Starting route guidance

Starting route guidance 152

Full route map screen 153

4-5. Route guidance screen

Route guidance screen 155

Typical voice guidance prompts 159

Cloud navigation

The navigation system indicates your present position and assists in locating a desired destination. Navigation is now a cloud enabled service. If your vehicle has an included trial, completing the Connected Services terms of use will activate the service.

The cloud navigation is a subscription service and an active subscription is required to use navigation in the vehicle. If an active subscription is not available or expired, the Navigation screen will have a [**Get started**] button to initiate the activation of cloud navigation.

This function may not be available in some regions.

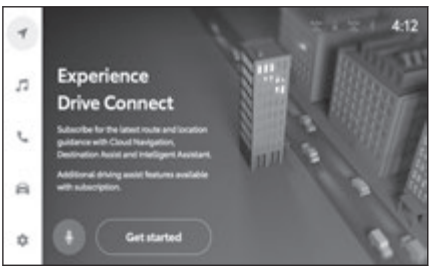

Map options screen

1 **Touch [≡] on the map screen.**

2 **Touch the desired item.**



[**Traffic**] : Turns the display of traffic information on/off.

[**Call destination assist**] : Makes a call to Destination Assist.

[**Go to navigation settings**] : Displays the navigation settings screen.

[**About**] : Displays the software version and license information.

Related Links

Traffic Information(P. 144)

Information displayed on the map screen

Traffic Information

Traffic data can be received via DCM (Data Communication Module) to display traffic information on the map screen.

1 **Touch [≡] on the map screen.**

2 **Touch [Traffic].**

Traffic information will be displayed on the map screen.

- Icons are used to indicate road conditions and incidents.
- Arrows indicate the direction of traffic.
- Colors indicate the speed at which traffic is moving.

If the traffic icon is touched, details about the selected traffic incident can be displayed.





Destination search screen

Searching for a destination using the keyboard

A destination can be searched for by entering keywords.

1 **Touch [ ] on the map screen.**

2 **Touch [ ].**

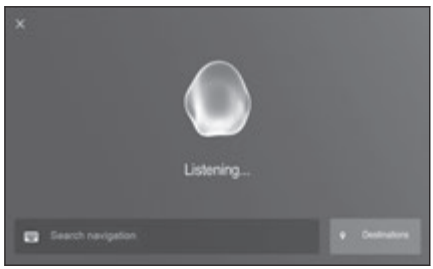

3 **Enter characters using the keyboard.**



4 **Touch [Go].**

5 **Select the desired item from the list.**

Searching for a destination by category

A destination can be searched for from a list of categories.

1 **Touch [ ] on the map screen.**

2 **Touch [Destinations].**

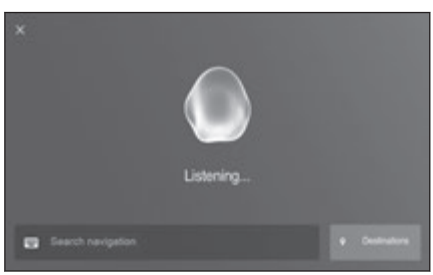

3 **Select [Navigation].**

4 **Touch the desired search method.**



[**Home**] : Sets the registered home as the destination.

A point must be registered as home before using this function.*1

[**Work**] : Sets the registered workplace as the destination.

A point must be registered as a workplace before using this function.*1

[**Favorites**] : Sets a destination by selecting a place in the favorite list.

[**Recents**] : Sets a destination by selecting a previous destination.

[**Sent to car**] : Sets a destination by selecting a place sent from Toyota app.

[**Food**] : Searches for a restaurant to set as a destination.

[**Fuel / Charging**] : Searches for a fuel station/charging facility to set as a destination.

[**Parking**] : Searches for a nearby parking lot to set as a destination.

[**Hospitals**] : Searches for a hospital to set as a destination.

When setting a business as a destination, if your estimated time of arrival is outside of business hours or near closing time, a notification asking to confirm the destination will be displayed.

5 **Touch the desired destination from the list.**

Related Links

Full route map screen(P. 153)

Editing the favorites list

The favorites list can be edited.

1 **Touch [ ] on the map screen.**

2 **Touch [Destinations].**

3 **Touch [Favorites].**

*1 : Home and Work must be added via Toyota app.

4 **Touch [✎].**

Touch [⊖] to delete a favorite.

The favorites list editing screen will be displayed.

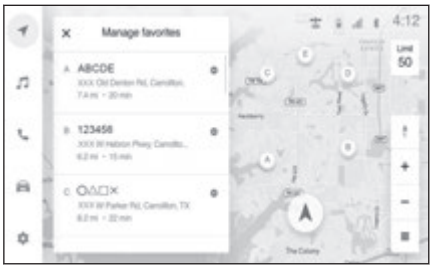

5 **Touch [Save].**

Editing the destination history

The destination history can be edited.

1 **Touch [🔍] on the map screen.**

2 **Touch [Destinations].**

3 **Touch [Recents].**

4 **Touch [✎].**

The destination history editing screen will be displayed.

Touch [⊖] to delete a destination history item.

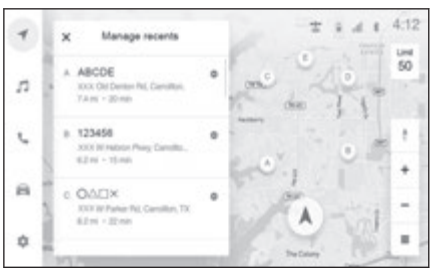

5 **Touch [Save].**

Searching for a destination using voice control

1 **Touch [🎤] or [🔍] on the map screen.**

2 **Say the keyword you wish to use for the search.**

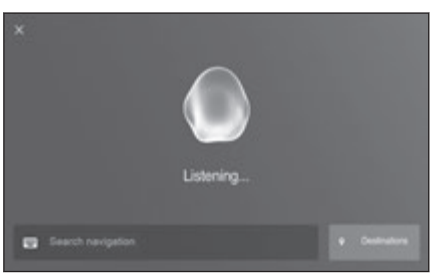

3 **Touch or use voice command for desired result from list.**

Destination search result list screen

When a destination has been searched for, a list of search results will be displayed.

- Touch or use voice command for the desired destination from the list. The full route map screen will be displayed. By touching [ ], the order of the list can be filtered or sorted.

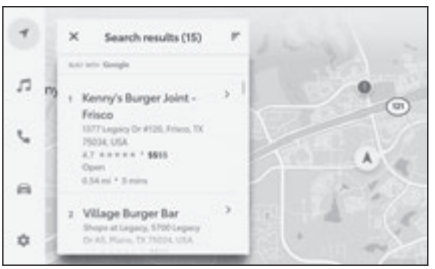

Related Links

Starting route guidance(P. 152)

Changing the order/filtering the suggested destination list

This function can only be used with an internet connection. As the results are obtained from the internet, the displayed content may change.

By touching [ ] on the suggested destination list screen, the order of the list can be changed or filtered.

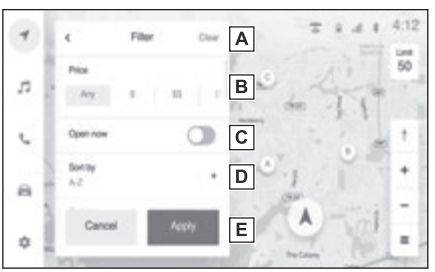

A Clears the order/filter conditions.

B Filters the list by price.

C Filters the list by locations which are open now.

D Changes the list order conditions.

E Applies the order/filter conditions and returns to the list.

POI suggestion

Based on various information, such as the current position, driving time, etc., the navigation system may suggest destinations.

For example:

- When the battery charge level is low, charging stations are suggested as a destination.
- When approaching the destination during route guidance, parking lots near the destination will be displayed.

1 **When a destination is suggested by the navigation system, touch [≡].**



2 **Touch the suggested point.**



3 **Touch [Go now].**



Related Links

Full route map screen(P. 153)

Destination Assist

Destination Assist provides you with live assistance for finding destinations via the Toyota response center. You can request either a specific business, address, or ask for help locating your desired destination by category, such as restaurants, shopping centers or other Points of Interest(POI).

After you tell the agent your choice of destination, its coordinates/address/destination name are sent wirelessly to your vehicle's navigation system.

The hands-free system cannot be used while Destination Assist is being used.

POI sent by Destination Assist agent cannot be added as favorites.

Calling the Destination Assist by voice command

1 **Start voice control by any of the following operations:**

- Press the talk switch on the steering wheel
- Say "Hey Toyota".
- Touch [ ] or [ ] on the map screen.

2 **Say "Destination Assist".**

Calling the Destination Assist from map screen

1 **Touch [ ] on the map screen.**



2 **Touch [Call destination assist].**



3 **Speak to the operator when the call is connected.**



The operator will confirm the desired destination information and send the destination to vehicle navigation screen. You can also ask agent to send additional destination to select destination as a waypoint or replace the current destination.

4 **Touch [Go now].**

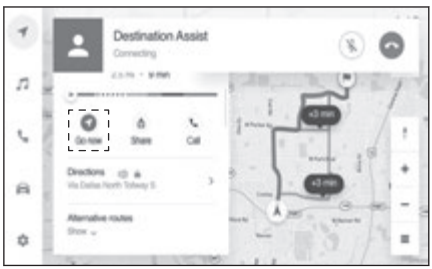

5 **Touch [ ] to end the call.**

● After the destination is set, you can also ask the agent to end the call.

Starting route guidance

After setting a destination, the search for a route will begin. When the search for a route is completed, the full route map screen (the full route from the current location to the destination) will be displayed. On the full route map screen, the desired route can be selected or the route information can be checked.

A route cannot be searched for if the destination is closer than 200 ft.(60m) to your current vehicle location.

● **Touch [Go now].**



INFORMATION

- The route for returning may not be the same as that for going.
- The route guidance to the destination may not be the shortest route or a route without traffic congestion.
- Route guidance may not be available if there is no road data for the specified location.
- If a destination that is not located on a road is set, the vehicle will be guided to the point on a road nearest to the destination. The road nearest to the selected point is set as the destination.

⚠ WARNING

Be sure to obey traffic regulations and keep road conditions in mind while driving. If a traffic sign on the road has been changed, the route guidance may not indicate such changed information.

Full route map screen

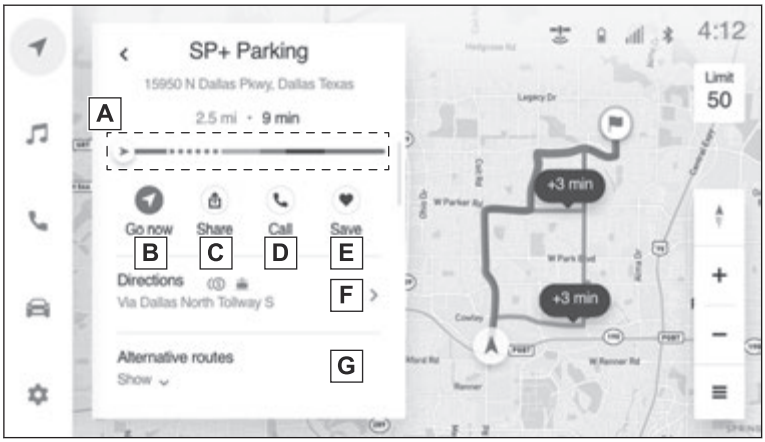

A Displays the level of traffic congestion on the route with colors.

- When there is low or zero congestion : blue
- When there is severe congestion : red
- When a road is closed : broken red line

B Starts route guidance. Touch and hold to start demo mode.

C Shares ETA information with a registered contact.

To use this function, a smartphone must be connected to the navigation system.

D Calls the phone number registered to the POI.

E Registers the destination as a favorite.

F Displays the directions list.

G Selects another route.

INFORMATION

If POI is set as the destination, business hours etc. are also displayed.

Related Links

Directions list screen(P. 153)
Route select screen(P. 154)
Starting demo mode(P. 154)

Directions list screen

A directions list is displayed for the route.

Displays the names of intersections which are passed through or turned at, and their distance from the current position.



Route select screen

1 **Touch [Alternative routes].**

2 **Touch the desired route.**



3 **Touch [‹].**

Starting demo mode

After searching for a route, before route guidance is started, a demo of the route guidance can be viewed.

● **Touch and hold [Go now] on the full route map screen.**

To end the demo, touch [**End**] or begin driving.

Route guidance screen

During route guidance, various guidance screens can be displayed, depending on the situation.

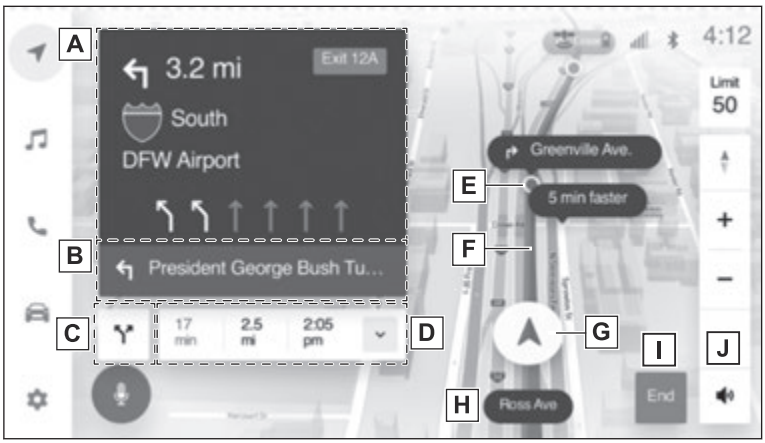

A Displays information about the upcoming navigation point, such as the distance to the next guidance point, turn directions, recommended lanes, etc.

B Displays when there is an action that needs to happen quickly after the next action (consecutive maneuver).

C Displays alternate route. One of multiple routes can be selected.

D Displays the time to your destination, estimated arrival time, distance, etc.

Touch [⌄] to display the destination information screen.

E Displays guidance points.

F Displays the guidance route.

G Displays the current position of the vehicle.

H Displays the name of the road the vehicle is currently driving on.

I Stops the active navigation.

J Mutes voice guidance.

INFORMATION

- If the destination cannot be reached within the drivable distance, a notification suggesting a charging facility as a waypoint on the route will be displayed.

- If a faster route is found during route guidance, a suggestion to change routes will be displayed.
- If the vehicle goes off the guidance route, the route will be recalculated.
- For some areas, the roads have not been completely digitized in our database. For this reason, the route guidance may select a road that should not be traveled on.

Related Links

Directions list screen(P. 153)

Destination information screen(P. 156)

Destination information screen



A Returns to the route guidance screen.

B Cancels or ends active navigation.

C Adds or edits destinations.

If multiple destinations are set, the edit stop screen will be displayed.

D Shares your estimated time of arrival.

To use this function, a smartphone must be connected to the navigation system.

E Selects alternate route.

Related Links

Sharing your ETA(P. 157)

Route select screen(P. 154)

Adding a destination

1 Display the destination information screen.

2 Touch [Add Stop].

3 Search for a destination to add.

4 Touch [Add Stop].

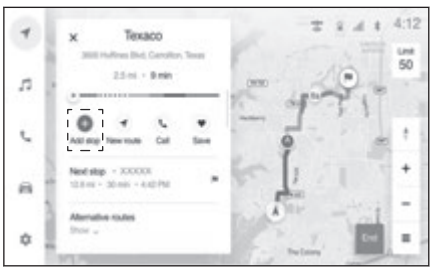

Deleting a destination (when multiple destinations have been set)

1 Display the destination information screen.

2 Touch [Edit Stop].

3 Touch [⊖] for the destination you wish to delete.

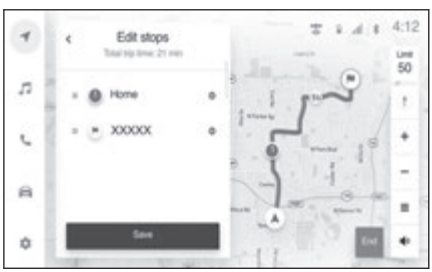

4 Touch [Save].

The destination order can also be changed by touching and dragging the name of a destination.

Sharing your ETA

1 Display the destination information screen.

2 Touch [Share ETA].

3 **Touch the contact with whom you wish to share your estimated time of arrival.**

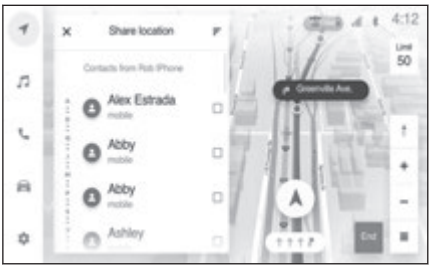

4 **Touch [Share].**

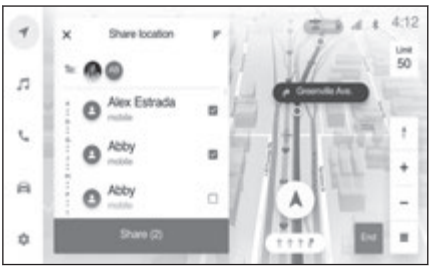

5 **Touch [OK].**

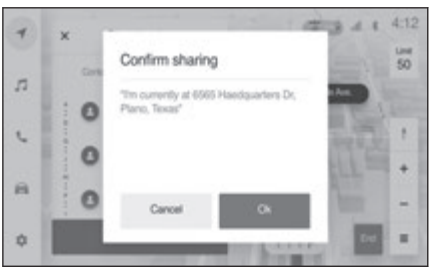

When you arrive at a destination

When you arrive at a destination, the destination arrival screen will be displayed.



A Shares position information with a registered contact.

To use this function, a smartphone must be connected to the navigation system.

B Calls the destination.

C Registers the destination as a favorite.

Typical voice guidance prompts

When a user is in active navigation and may or may not be on the navigation screen on the head unit; voice guidance for the active route will help user for maneuvers to turns, exits from highway/freeway, entrance to highway/freeway, U-turns, which lanes to stay in for these maneuvers, etc. Such maneuver points are referred to as guidance points. These voice prompts are audible to the user 2-3 times at specific distances when approaching a guidance point. Voice guidance can be heard in the language of user setting.

⚠ WARNING

Be sure to obey the traffic regulations and keep the road condition in mind especially when you are driving on IPD roads (roads that are not completely digitized in our database). The route guidance may not have the updated information such as the direction of a one way street.

5 Audio system

5-1. Radio operation

Listening to the radio . 162

Troubleshooting guide 165

Refer to the table below to identify the problem and take the suggested corrective action 166

5-2. USB flash drive operation

Playing music files on a USB flash drive 167

Precautions for playback of USB flash drive 169

5-3. iPod/iPhone operation

Playing iPod/iPhone... 171

Precautions for playback of iPod/iPhone. 173

5-4. Apple CarPlay operation

Playing Apple CarPlay 174

Precautions for playback of Apple CarPlay 176

5-5. Android Auto operation

Playing Android Auto . 177

Precautions for playback of Android Auto 179

5-6. Bluetooth® audio operation

Playing Bluetooth® audio 180

Precautions for Bluetooth® audio playback 183

5-7. Integrated Streaming

Playing Integrated Streaming 185

Listening to the radio

Switch to your preferred frequency or service and listen to the radio.

INFORMATION

- The radio automatically blends to an HD Radio™ signal in AM or FM where available. The radio automatically changes to stereo reception when a stereo broadcast is received.
- Radio mode has a mix preset function, which can store up to 20 stations from any of the AM/FM and SiriusXM bands.
- If you navigate to another radio station while playing radio, the playback screen is minimized. Touching the minimized playback screen restores the playback screen to its original size.

1 **Touch [♫] from the main menu.**

2 **Touch [Sources].**

3 **Touch [Radio].**

4 **Select the station selection method or service as necessary.**

[**Favorites**] : Select a broadcasting station from those registered as favorites.

[**Tune**] : Select the broadcasting station by entering a frequency with the numeric keypad.

[**FM Radio**] : Switches to FM mode. The FM station list, the 3 most recently listened stations, and the receivable FM broadcasting stations are displayed.

[**AM Radio**] : Switches to AM mode. The AM station list, the 3 most recently listened stations, and the receivable AM broadcasting stations are displayed.

[**SiriusXM**][*1] : Switches to SiriusXM mode.

Displays [**For You**] and contents/Super Categories/[**All channels**]/[**Listening History**].

5 **Select the broadcasting station from the station list or genre.**

6 **Operate the radio that is being received as necessary.**

● Operating AM/FM radio from the screen

*1 : This function is not available in some regions.

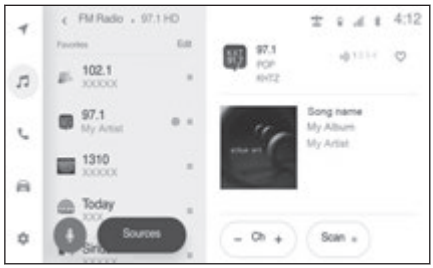

[**Ch**] : Touch [−]/[+] to search for the receivable broadcasting stations.

Touch and hold to jump to the next frequency with available radio signal. When released, the broadcasting station closest to that position with the best reception sensitivity is selected automatically.

[**Scan**] : SEEK UP and output the audio of the detected station for 10 sec. This is repeated.

[HD 1 2 3] : Displayed when Multicast CH is supported in FM mode. Touch to display the SPS channel list. The mode can be changed to the displayed SPS channel list.

[♡] : Registers the currently received broadcasting station in favorites. When registered, touch to cancel.

Preset buttons of sub menu : Receives the registered broadcasting station.

● Operating SiriusXM radio from the screen*1

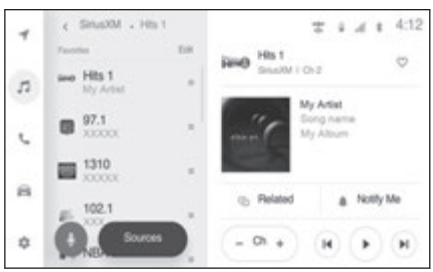

[**Ch**] : Touch [−]/[+] to search for the receivable channels.

Touch and hold to jump to the next frequency with available radio signal. When released, the current channel is received.

[⏮]/[⏭] : Fast rewind or fast forward the radio cache.

Touch and hold to jump to the start or end of the buffer.

[⏸] : Pause the radio cache.

[▶] : Play the radio cache.

[**Related**] : Displays content related to the received channel.

*1 : This function is not available in some regions.

[**Notify me**] : Select an artist or song, or both an artist and song, to receive a notification when the corresponding broadcast starts.(When receiving a regular channel)

Select a sports team to receive a notification when the corresponding broadcast starts. (When receiving a sport channel)

[♡] : Registers the currently received channel in favorites. When registered, touch to cancel.

Preset buttons of sub menu : Receives the registered channel.

● Operating with the steering switches

[<]/[>] switches

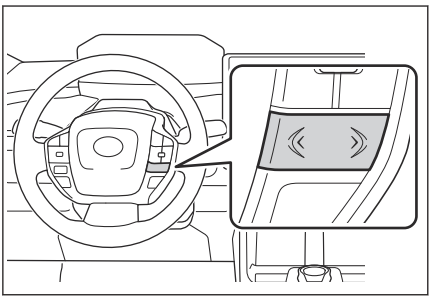

- AM/FM Radio

  Switch the frequencies or broadcasting stations registered in the preset buttons in order.

  Press and hold to switch frequencies. When released, the broadcasting station closest to that position with the best reception sensitivity is selected automatically.

- SiriusXM radio

  Switch the channels registered in the preset buttons in order.

  Press and hold to switch channels. When released, the channel closest to that position with the best reception sensitivity is selected automatically.

Related Links

Changing sound and media settings(P. 66)

Troubleshooting guide

Experience	Cause	Action
Mismatch of time alignment- a user may hear a short period of programming replayed or an echo, stutter or skip.	The radio stations analog and digital volume is not properly aligned or the station is in ballgame mode.	None, radio broadcast issue. A user can contact the radio station.
Sound fades, blending in and out.	Radio is shifting between analog and digital audio.	Reception issue, may clear-up as the vehicle continues to be driven. Turning the indicator of the [**HD Radio AM**] and [**HD Radio FM**] button off can force radio in an analog audio.
Audio mute condition when an HD2/HD3 multicast channel had been playing.	The radio does not have access to digital signals at the moment.	This is normal behavior, wait until the digital signal returns. If out of the coverage area, seek a new station.
Audio mute delay when selecting an HD2/HD3 multicast channel preset.	The digital multicast content is not available until HD Radio™ broadcast can be decoded and make the audio available. This takes up to 7 seconds.	This is normal behavior, wait for the audio to become available.
Text information does not match the present song audio.	Data service issue by the radio broadcaster.	Broadcaster should be notified. Complete the form:https://hdradio.com/stations/feedback/.
No text information shown for the present selected frequency.	Data service issue by the radio broadcaster.	Broadcaster should be notified. Complete the form: https://hdradio.com/stations/feedback/.

Refer to the table below to identify the problem and take the suggested corrective action

When problems occur with the SiriusXM tuner, a message will appear on the screen. Referring to the table below to identify the problem, take the suggested corrective action.

Message	Explanation
"SAT Antenna Error"	The SiriusXM antenna is not connected. Check whether the SiriusXM antenna cable is attached securely. Contact your Toyota certified dealer for assistance.
	A short circuit occurs in the antenna or the surrounding antenna cable. Contact your Toyota certified dealer for assistance.
"No Satellite Signal"	The SiriusXM signal is too weak at the current location. Wait until your vehicle reaches a location with a stronger signal.
"Channel not available"	The channel you selected is not broadcasting any programming. Select another channel.
"SAT Hardware Error"	This indicates a problem in the SiriusXM module. Contact your Toyota certified dealer for assistance.
"Something went wrong"	Please try another channel.

Playing music files on a USB flash drive

Play music files on a USB flash drive connected to the USB Type-C port to enjoy music. When a USB flash drive is connected, a button with the device's name is displayed on the source selection screen. This may not be displayed for some devices.

Connect the USB flash drive.

1 **Touch [♫] from the main menu.**

2 **Touch [Sources].**

3 **Touch the device name or [USB].**

4 **Operate the USB flash drive that is playing as necessary.**

● Operating from the screen

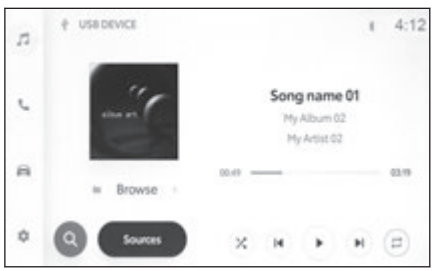

[⤮] : Performs random playback.

Each time this is touched, the mode switches between random playback for all files or tracks, random playback canceled, and random playback of the currently playing folder or album.

[⏮] : Plays the currently playing file or track from the beginning. When at the start of the file or track, the previous file or track will play from the beginning.

Touch and hold to fast rewind. Release to start playback from that position.

[⏸] : Pauses playback.

[▶] : Plays.

[⏭] : Switches the files or tracks.

Touch and hold to fast forward. Release to start playback from that position.

[ ] : Performs repeat playback.

Each time this is touched, the mode switches in order from repeat the currently playing file or track, repeat playback of the currently playing folder or album, and repeat playback of all files or tracks.

[**Browse**] : Displays the playback mode in the sub menu.

Tracks can be selected from a list sorted by artist, album, folder, song, genre, or composer.

- Operating with the steering switches

[<]/[>] switches

Switch the files or tracks.

Press and hold to fast forward or fast rewind. Release to start playback from that position.

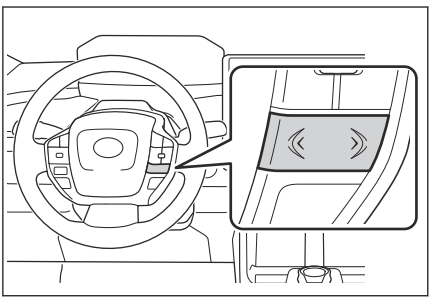

Related Links

Connecting a device via the USB Type-C port(P. 34)

Changing sound and media settings(P. 66)

Precautions for playback of USB flash drive

Pay special attention to the following information about playing a USB flash drive.

INFORMATION

- When a USB hub is used to connect multiple devices, devices other than the first device to be recognized cannot be used.
- Removing a USB flash drive or disconnecting a connected device during playback may cause noise to be output.
- When a USB flash drive is connected and the source is switched from another source to the USB flash drive, the first file on the drive is played. If the same USB flash drive (without its contents changed) is inserted again, playback will be started from the previously played song.
- Reading a file in an unsupported format may affect operations.

WARNING

For safety reasons, the driver should not operate the USB flash drive while driving.

NOTICE

- Do not leave a USB flash drive inside the vehicle. The inside of the vehicle can become hot, which could cause the USB flash drive to malfunction.
- Do not push down on or subject the connected USB flash drive to unnecessary pressure. The USB flash drive or port may be damaged.
- Keep the port free of foreign matter. The USB flash drive or port may be damaged.

Playback of MP3/WMA/AAC/WAV/FLAC/ALAC/Ogg Vorbis

When a USB flash drive storing MP3/WMA/AAC/WAV/FLAC/ALAC/Ogg Vorbis files is connected, first all the files on the USB flash drive are checked.

It is recommended that no files other than MP3/WMA/AAC/WAV/FLAC/ALAC/Ogg Vorbis files and no unnecessary folders are written onto the USB flash drive. This ensures that the USB flash drive check finishes quickly.

INFORMATION

Many types of encoder software, such as freeware, are available in the market for MP3/WMA/AAC/WAV/FLAC/ALAC/Ogg Vorbis. Depending on the encoder condition or file format, audio quality deterioration or noise at playback start may occur, or playback may not be possible.

NOTICE

Do not add an incorrect extension to a file. Adding an extension to a file that does not match the file contents may result in files being incorrectly recognized and played. This will output a loud noise that may damage the speakers.

Incorrect examples:

- Adding the ".mp3" extension to a file that is not MP3
- Adding the ".wma" extension to a file that is not WMA

Related Links

Information about media that can be used(P. 300)

Format information(P. 300)

USB flash drive(P. 306)

Playing iPod/iPhone

Play back music files on an iPod or iPhone connected to the USB Type-C port. When an iPod or iPhone is connected, a button with the device's name is displayed on the source selection screen. This may not be displayed for some devices.

INFORMATION

- Depending on the generation and model of iPod or iPhone that is connected, the cover art image may look grainy or display of the list scroll may be slow.
- Some operations may not be available or they may operate differently, depending on the generation and model of iPod/iPhone that is connected.

Connect an iPod or iPhone.

1. **Touch [♫] from the main menu.**
2. **Touch [Sources].**
3. **Touch the device name or [USB].**
4. **Operate the iPod or iPhone that is playing as necessary.**

● Operating from the screen

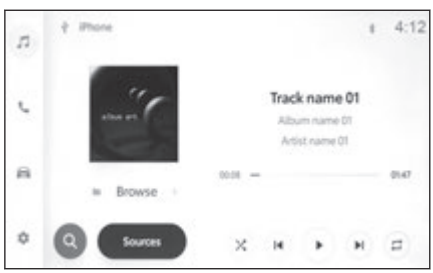

[⤮] : Performs shuffle playback.

Each touch switches the shuffle setting.*1

[⏮] : Plays the currently playing track from the beginning. When at the start of the track, the previous track will play from the beginning.

Touch and hold to fast rewind. Release to start playback from that position.

[⏸] : Pauses playback.

[▶] : Plays.

*1 : The order in which shuffle or repeat settings switch depends on the connected device.

[ ] : Switches the tracks.

Touch and hold to fast forward. Release to start playback from that position.

[ ] : Performs repeat playback.

Each touch switches the repeat setting.*1

[**Browse**] : Displays the playback mode in the sub menu.

Tracks can be selected from a list sorted by artist, album, song, playlist, genre, Podcast, composer, audiobook, or radio.

[**Shuffle play**] is displayed when playing a track selected from the list. Touch this to return to the playback screen and perform shuffle playback.

● Operating with the steering switches

[<]/[>] switches

Switch the tracks.

Press and hold to fast forward or fast rewind. Release to start playback from that position.

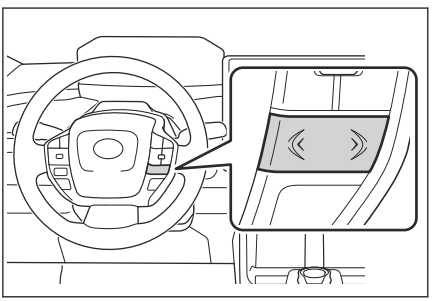

Related Links

Connecting a device via the USB Type-C port(P. 34)

Changing sound and media settings(P. 66)

*1 : The order in which shuffle or repeat settings switch depends on the connected device.

Precautions for playback of iPod/iPhone

Pay special attention to the following information about playing iPod/iPhone.

INFORMATION

- This function cannot be used while Android Auto is connected.
- When a USB hub is used to connect multiple devices, devices other than the first device to be recognized cannot be used.
- Disconnecting a port or disconnecting a connected device while in iPod/iPhone mode may cause noise to be output.
- When switching from a different source to an iPod/iPhone while the iPod/iPhone is connected, playback will be started from the previously played track.*1

WARNING

For safety reasons, the driver should not operate the iPod/iPhone while driving.

NOTICE

- Do not leave the iPod/iPhone inside the vehicle. The inside of the vehicle can become hot, which could cause the iPod/iPhone to malfunction.
- Do not push down on or subject the connected iPod/iPhone to unnecessary pressure. The iPod/iPhone, or the port, may be damaged.
- Keep the port free of foreign matter. The iPod/iPhone or the port may be damaged.

Related Links

iPhone/iPod(P. 304)

*1 : Depending on the device connected, operation may be different from described.

Playing Apple CarPlay

Play music files on an iPhone connected to the USB Type-C port or a wirelessly connected iPhone. When Apple CarPlay is connected, a button with the device's name is displayed on the source selection screen. This may not be displayed for some devices.

INFORMATION

- Some operations may not be available or they may operate differently, depending on the generation and model of iPhone that is connected.
- In cases such as the track not playing normally or audio skipping, update iOS to the latest version. Updating may resolve the issues.

Connect Apple CarPlay.

1. **Touch [ ] from the main menu.**
2. **Touch [Sources].**
3. **Touch [Apple CarPlay] (device name).**
4. **Operate the Apple CarPlay that is playing as necessary.**

● Operating from the screen

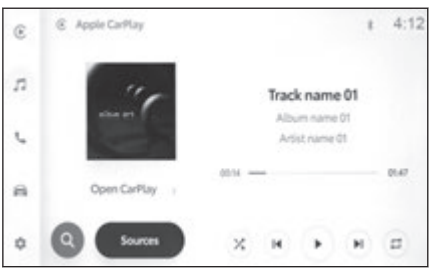

[ ] : Performs shuffle playback.

Each touch switches the shuffle setting.*1

[ ] : Plays the currently playing track from the beginning.

When at the start of the track, the previous track will play from the beginning.

Touch and hold to fast rewind. Release to start playback from that position.

[ ] : Pauses playback.

[ ] : Plays.

*1 : The order in which shuffle or repeat settings switch depends on the connected device.

[ ] : Switches the tracks.

Touch and hold to fast forward. Release to start playback from that position.

[ ] : Performs repeat playback.

Each touch switches the repeat setting.*1

[**Open CarPlay**] : Displays the Apple CarPlay screen.

● Operating with the steering switches

[<]/[>] switches

Switch the tracks.

Press and hold to fast forward or fast rewind. Release to start playback from that position.

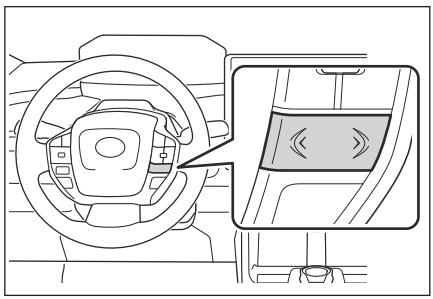

Related Links

Changing sound and media settings(P. 66)
Using Apple CarPlay with an unregistered smartphone(P. 123)
Using Apple CarPlay with a registered smartphone(P. 126)
Setting Bluetooth® devices(P. 89)

*1 : The order in which shuffle or repeat settings switch depends on the connected device.

Precautions for playback of Apple CarPlay

Pay special attention to the following information about playing Apple CarPlay.

INFORMATION

- This function cannot be used while Android Auto is connected.
- Disconnecting a connected device while Apple CarPlay is connected via USB may cause noise to be output.
- When a different source is switched to Apple CarPlay while an iPhone is connected, playback will be started from the previously played track.

WARNING

For safety reasons, the driver should not operate the iPhone while driving.

NOTICE

- Do not leave the iPhone inside the vehicle. The inside of the vehicle can become hot, which could cause the iPhone to malfunction.
- Do not push down on or subject the connected iPhone to unnecessary pressure. The iPhone or port may be damaged.
- Keep the port free of foreign matter. The iPhone or port may be damaged.

Related Links

Precautions when using Apple CarPlay and Android Auto(P. 120)

Playing Android Auto

Play music files on an Android device connected to the USB Type-C port or a wirelessly connected Android device. When an Android device is connected, a button with the device's name is displayed on the source selection screen. This may not be displayed for some devices.

Connect Android Auto.

1 **Touch [♫] from the main menu.**

2 **Touch [Sources].**

3 **Touch [Android Auto] (device name).**

4 **Operate the Android Auto that is playing as necessary.**

● Operating from the screen

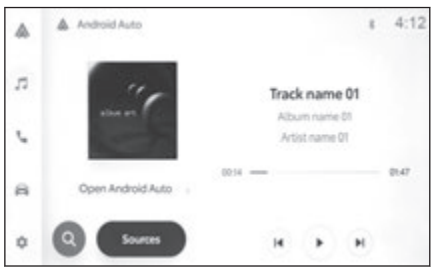

[⏮] : Plays the currently playing track from the beginning. When at the start of the track, the previous track will play from the beginning.

[⏸] : Pauses playback.

[▶] : Plays.

[⏭] : Switches the tracks.

[**Open Android Auto**] : Displays the Android Auto screen.

● Operating with the steering switches

[<]/[>] switches

Switch the tracks.

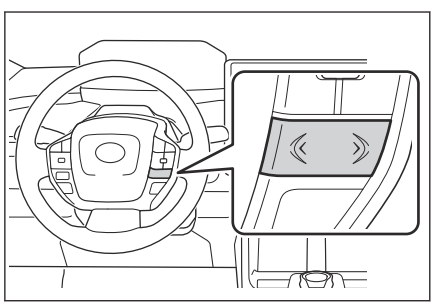

Related Links

Changing sound and media settings(P. 66)

Using Android Auto with an unregistered smartphone(P. 129)
Using Android Auto with a registered smartphone(P. 132)
Setting Bluetooth® devices(P. 89)

Precautions for playback of Android Auto

Pay special attention to the following information about playing Android Auto.

INFORMATION

- This function cannot be used while Apple CarPlay is connected.
- Disconnecting a connected device while Android Auto is connected via USB may cause noise to be output.
- When a different source is switched to Android Auto while an Android device is connected, playback will be started from the previously played track.

WARNING

For safety reasons, the driver should not operate the Android device while driving.

NOTICE

- Do not leave the Android device inside the vehicle. The inside of the vehicle can become hot, which could cause the Android device to malfunction.
- Do not push down on or subject the connected Android device to unnecessary pressure. The Android device or port may be damaged.
- Keep the port free of foreign matter. The Android device or port may be damaged.

Related Links

Precautions when using Apple CarPlay and Android Auto(P. 120)

Playing Bluetooth® audio

By connecting a portable device, the portable device can be used without operating it directly.

INFORMATION

- The following information may not be displayed depending on the connected portable device.
  - Folder title
  - Song name
  - Album name
  - Artist name
  - Playback time
  - Total time
  - Random
  - Repeat
  - Playback/pause
  - Track up/down
- The following issues may occur depending on the connected device.
  - Operation cannot be performed from the multimedia system.
  - Operation or volume is different.
  - The display of data such as song information or time may differ between the multimedia system and the portable device.
  - The connection may disconnect when playback stops.
- When playing for a long time, the sound may skip.
- The volume while connected may differ depending on the portable device.
- The volume level between the paired mobile device and the multimedia system are synchronized. When the volume of the device is changed it change the multimedia volume for Bluetooth® audio.

A portable device can be connected to the multimedia system.

1 **Touch [♫] from the main menu.**

2 **Touch [Sources].**

3 **Touch the device name or [Bluetooth].**

4 **Operate the Bluetooth® audio that is playing as necessary.**

● Operating from the screen

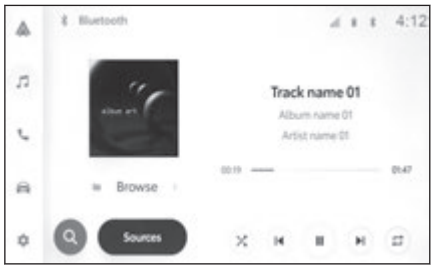

[ ] : Performs random playback.

Each touch switches the random setting.*1

[ ] : Plays the currently playing track from the beginning. When at the start of the track, the previous track will play from the beginning.

Touch and hold to fast rewind. Release to start playback from that position.

[ ] : Pauses playback.

[ ] : Plays.

[ ] : Switches the tracks.

Touch and hold to fast forward. Release to start playback from that position.

[ ] : Performs repeat playback.

Each touch switches the repeat setting.*1

[**Browse**] : Displays the playback mode in the sub menu. Tracks can be selected from a list.

● Operating with the steering switches

[<]/[>] switches

Switch the tracks.

Press and hold to fast forward or fast rewind. Release to start playback from that position.

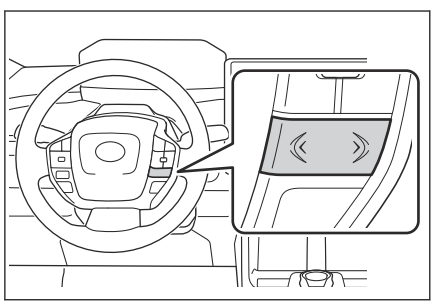

*1 : The order in which random or repeat settings switch depends on the model.

Related Links

Changing sound and media settings(P. 66)

Setting Bluetooth® devices(P. 89)

Precautions for Bluetooth® audio playback

Pay special attention to the following information when using Bluetooth® audio playback.

INFORMATION

- Registration of the cellular phone or other Bluetooth® portable audio player (hereafter referred to as portable device) in the multimedia system is required before use.
- Please be aware that some functions may be limited depending on the model of portable device.
- Using simultaneously with a wireless device could negatively affect communication for each.
- When the Wi-Fi® function is enabled in the multimedia system settings, the Bluetooth® audio sound may be interrupted.

WARNING

- For safety reasons, the driver should not operate the portable device while driving.
- The vehicle antenna for Bluetooth® communication is built into the multimedia system.

  People using electrical medical devices other than implantable cardiac pacemakers, implantable cardiac resynchronization therapy-pacemakers, or implantable cardioverter defibrillators should consult with their physician and the device manufacturer to determine whether electrical waves could adversely affect devices before use.

NOTICE

- Do not leave the portable device inside the vehicle. The inside of the vehicle can become hot, which could cause the portable device to malfunction.
- Do not use a portable device near the multimedia system. Bringing it too close could cause sound or connection quality to deteriorate.

Related Links

Changing Wi-Fi® setting(P. 85)

Setting Wi-Fi® Hotspot(P. 87)

Bluetooth®(P. 307)

Precautions when using Bluetooth® devices(P. 96)

Registering a Bluetooth® device from the multimedia system(P. 100)

Playing Integrated Streaming*1

The Integrated Streaming can be listened via audio system. In order to use this function, the customer needs to download and install the Toyota app to mobile device first. Your music account must be linked in Toyota app.

Go to https://www.toyota.com for more information.

INFORMATION

- The available functions and screen layout may vary by music app.
- If you navigate to another Integrated Streaming screen while playing music, the playback screen is minimized. Selecting the minimized playback screen restores the playback screen to its original size.
- The screen layout may vary depending on the music app.

1 **Touch [♫] from the main menu.**

2 **Touch [Sources].**

3 **Select the desired streaming music service name to display the playback screen.**

4 **As necessary, operate the following while playing music.**

● Screen operation

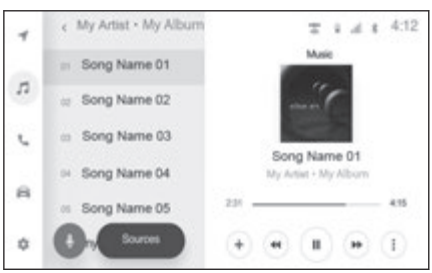

[⊕] : Stores the current playing song to library.

[⏮]/[⏭] : Switches the track.

Touch and hold to fast rewind/fast forward. Release to start playback from that position.

[■] : Stops the current playing music.

[⏸] : Pauses playback.

[▶] : Plays.

*1 : This function is not available in some regions.

[] : Displays the menu. The selectable contents as follow:

- [**Create station**] : Creates a station that play songs similar to current playing song.
- [**Shuffle**] : Performs random playback. Tracks or albums can be automatically and randomly selected.
- [**Repeat**] : Performs repeat playback. Each time this is touched, the mode switches in order of playlist, single track, and off.
- [**Love**]/[**Dislike**] : Helps to personalize recommended content in music app's homepage to better match your preferences.

Song name on sub menu list : The current playing song can be changed by touching folder name or song name.

Related Links

Changing sound and media settings(P. 66)

6 Hands-free calls

6-1. Precautions when using hands-free calls

Precautions for hands-free calling 188

When hands-free calling might be malfunctioning 192

6-2. Operating hands-free calls with the steering switches

Operating with the steering switches 197

6-3. How to make calls

Making calls from call history 199

Making calls from the favorites list..... 200

Making calls from contacts 201

Making calls from keypad..... 202

6-4. How to receive calls

Answering calls..... 203

Declining calls..... 205

6-5. In-call operations

Performing operations from the call screen . 206

Answering a second call 208

Making a call to another party during an ongoing call..... 209

Making conference calls..... 210

Ending calls 211

6-6. Changing phones for hands-free calls

Switching phones for hands-free calls 212

6-7. Editing contact data

Transferring contact data..... 214

6-8. How to use the message function

Precautions when using the message function 216

Making calls from the message function..... 220

Precautions for hands-free calling

By connecting a Bluetooth® cellular phone that has been verified with the system, the phone function can be used to make and receive calls without operating the cellular phone directly. This is known as hands-free calling.

A cellular phone must support the multimedia system specifications in order to connect to the system. However, be aware that some functions may be limited depending on the model of cellular phone.

Even while connected to Apple CarPlay or Android Auto, the hands-free phone screen for Apple CarPlay or Android Auto may not be displayed, depending on conditions.

INFORMATION

- Observe the following precautions when using the cellular phone with the hands-free function.
  - A cellular phone must be registered to the multimedia system and connected with Bluetooth® before hands-free calling can be used. To use hands-free calling, first register a cellular phone.
  - Make sure the cellular phone is able to utilize the Bluetooth® function.
  - If attempting to make or receive a call during Bluetooth® audio playback, the screen display and dial tone or ringtone sound may be delayed.
- The multimedia system is not guaranteed to operate with all Bluetooth® devices.

  The following issues may occur depending on the cellular phone model.
  - When the power switch is operated during a hands-free call, the call may be disconnected.
  - The calling screen may not be displayed, or the call screen may be displayed before the other party answers the phone.
  - Even if numbers are entered using the numeric keypad on the call screen, the tone signal may not be transmitted depending on the cellular phone service provider.
  - After dialing, it may be necessary to perform operations on the cellular phone.
- Hands-free calling may be unavailable in the following situations.

- When outside of the calling area
- When outgoing calls are restricted, such as when the lines are congested
- During emergency calls
- While contact data is being transferred from the cellular phone
- When dial lock is turned on for the cellular phone
- When the cellular phone is in use, such as when transmitting data
- When the cellular phone is malfunctioning
- When the cellular phone is not connected
- When the cellular phone has a low battery
- When the cellular phone is turned off
- When the settings prevent the cellular phone from being used for hands-free calls
- When switching from data communication or contact transfer to hands-free calling with the multimedia system. (While switching, Bluetooth® connection status for the multimedia system will not be displayed)
- When the cellular phone itself cannot be used for any other reason

● If hands-free calling and the Wi-Fi® function (Wi-Fi® or Wi-Fi® Hotspot) are used simultaneously, the Bluetooth® connection of the cellular phone may be disconnected.

⚠ WARNING

● The driver should operate mobile devices in hands free mode only. Failure to follow this warning will lead to driver distraction which can cause personal injury or death.

● The driver is solely responsible for the safe operation of the vehicle.

● People with implantable cardiac pacemakers, cardiac resynchronization therapy-pacemakers or implantable cardioverter defibrillators should maintain a reasonable distance between themselves and the Bluetooth® antennas. The radio waves may affect the operation of such devices.

● Before using Bluetooth® devices,users of any electrical medical device other than implantable cardiac pacemakers, cardiac resynchronization therapy-pacemakers or implantable cardioverter defibrillators should consult the manufacturer of the device for information about its oper-

⚠ WARNING

ation under the influence of radio waves. Radio waves could have unexpected effects on the operation of such medical devices.

⚠ NOTICE

Do not leave a cellular phone inside the vehicle. The inside of the vehicle can become hot, which could cause the cellular phone to malfunction.

Related Links

Precautions when using Bluetooth® devices(P. 96)

Bluetooth® specifications and compatible profiles(P. 99)

Registering a Bluetooth® device from the multimedia system(P. 100)

Precautions for call audio

In a hands-free call, the car's built-in microphone can be used to speak. Pay special attention to the following information when making a hands-free call.

- The audio when receiving calls or when talking during calls is output from speakers on both sides of the front seats.
- The audio is muted when a voice or ringtone is output from the hands-free system.

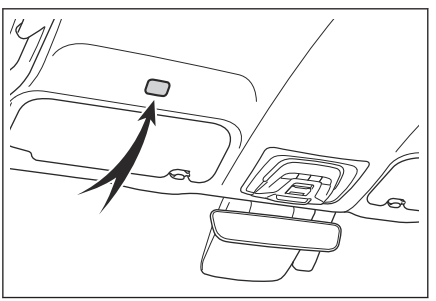

INFORMATION

- During calls, take turns speaking with the other party on the phone. If both parties speak at the same time, it may be difficult to hear what the other party is saying.
- If the receiver volume is too high, the other party's voice may be audible outside the vehicle or echoes may be heard.
- Speak clearly in a loud voice.
- The other party may not hear your voice clearly in the following situations.
  - Driving on rough roads

- Driving at high speeds
- The windows are open
- The air conditioning vents are pointed towards the microphone
- The sound of the air conditioning fan is loud
- The cellular phone is brought closer to the microphone

● There might be an adverse effect on sound quality (such as noise or echo) depending on the phone or network being used.

● If other Bluetooth® devices are connected at the same time, noise may be generated in the hands-free system audio.

● If the multimedia system has been configured to use the Wi-Fi® function (Wi-Fi® or Wi-Fi® Hotspot), noise may be generated in the hands-free system.

⚠ NOTICE

Do not touch or poke sharp objects into the microphone. This may cause a malfunction.

Precautions when selling or disposing of the vehicle

A lot of personal information is registered when using the hands-free system. Make sure to clear all information before selling or disposing of the vehicle.

After initializing all the information, all the data in the multimedia system will be initialized and returned to the factory default. It cannot be returned to the state before initialization.

Related Links

Changing the security settings(P. 72)

When hands-free calling might be malfunctioning

If you notice any of the following symptoms, refer to the following table for possible reasons and solutions, and check the symptom again.

■ Using hands-free calls

Symptom	Possible reason	Solution
Hands-free calls cannot be used	Your cellular phone does not support Bluetooth®.	For a list of specific devices which operation has been confirmed on multimedia system, check with your Toyota dealer or the following website: https://www.toyota.com/connected-services in the United States, https://www.toyotapr.com/serviciosconectados in Puerto Rico, and https://www.toyota.ca/toyota/en/about/connected-services in Canada.
	Your cellular phone version is not compatible with Bluetooth®.	Use a cellular phone compatible with Bluetooth® Core Specification Ver. 5.0 or later.

■ Cellular phone registration and connection

Symptom	Possible reason	Solution
Your cellular phone cannot be registered	The cellular phone registration operation has not been completed.	Select the authentication button when it is shown on your cellular phone and continue the registration operation.
	There is registration information remaining on either the cellular phone or the multimedia system.	Perform the registration operation again after deleting the registration information from both the multimedia system and the cellular phone.

Symptom	Possible reason	Solution
Cannot connect via Bluetooth®	A cellular phone other than the one to use is already connected via Bluetooth®.	Manually connect the cellular phone to use via Bluetooth® from the multimedia system.
	The Bluetooth® function of the cellular phone is not activated.	While the power switch is in ACC or ON, activate the Bluetooth® function on the cellular phone.
	The cellular phone registration information has been deleted.	Perform the registration operation after deleting the registration information from both the multimedia system and the cellular phone.

■ Calling and receiving calls

Symptom	Possible reason	Solution
Cannot make or receive calls	Outside the service area	Move to a place in which the [ ] icon disappears.
	Call restriction (dial lock) is turned on for the cellular phone.	Turn off call restriction (dial lock) for the cellular phone.

■ Contacts

Symptom	Possible reason	Solution
Cannot transfer or automatically transfer contact data	The cellular phone profile does not support transferring contact data.	For a list of specific devices which operation has been confirmed on multimedia system, check with your Toyota dealer or the following website: https://www.toyota.com/connected-services in the United States, https://www.toyotapr.com/serviciosconectados in Puerto Rico, and https://www.toyota.ca/toyota/en/about/connected-services in Canada.
	[**Sync contacts**] in the Bluetooth® settings on the multimedia system is set to off.	Set [**Sync contacts**] in the Bluetooth® settings on the multimedia system to on.
	The cellular phone is waiting for approval to transfer contacts.	Select the contacts transfer approval button on the cellular phone.
An approval confirmation screen is displayed on the cellular phone	The cellular phone is not set to always allow.	Set the cellular phone to always allow.
The contact data is registered elsewhere	The contacts are not registered to the cellular phone.	Register the contacts to the cellular phone.

■ When using the Bluetooth® message function

Symptom	Possible reason	Solution
New message notifications are not displayed.	Set [**Do not disturb**] on multimedia system to ON.	Set [**Do not disturb**] on multimedia system to OFF.

Symptom	Possible reason	Solution
New message notifications are not displayed.	Automatic message transfer function is not enabled on the cellular phone.	Enable automatic transfer function on the cellular phone.

■ Other conditions

Symptom	Possible reason	Solution
If symptoms do not improve after applying possible solutions	The cellular phone and multimedia system are too far apart.	Move the cellular phone and multimedia system closer together.
	Electromagnetic interference is being generated.	Turn the power off for any devices that may be generating electromagnetic waves, such as Wi-Fi® devices. Set the Wi-Fi® setting on the multimedia system to off.
	The cause lies in the cellular phone.	Turn the power off for the cellular phone, and remove the battery pack.
		Turn the cellular phone's Bluetooth® connection from off to on.
		Turn off the cellular phone's Wi-Fi® connection.
		Stop any security software or background applications that are running on the cellular phone.
		Make sure to carefully confirm the provider and operating status of applications installed on the cellular phone before use.

INFORMATION

For more details, refer to the instruction manual included with the cellular phone.

Related Links

Registering a Bluetooth® device from the multimedia system(P. 100)

Deleting a registered Bluetooth® device(P. 104)

Setting Bluetooth® devices(P. 89)

Disconnecting Wi-Fi®(P. 116)

Disconnecting Wi-Fi® Hotspot(P. 118)

Operating with the steering switches

Some hands-free call functions can be operated from the steering switches, such as receiving or making calls.

● **Operate the switches as necessary.**

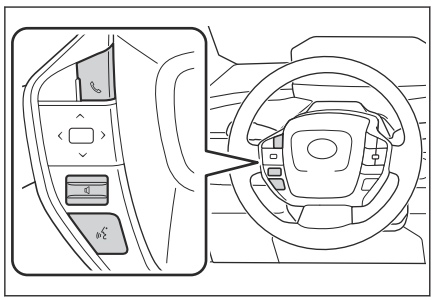

[ ] switch

- While a call cannot be made, displays call history screen or phone menu.
- Phone calls can be made when [ ] is displayed on the phone screen.
- While making a call or during a call, ends the call.
- While receiving a call or during call waiting, answers the call.

[ ] switch

Adjusts the ringtone volume or receiver volume.

Press and hold to adjust continuously.

[ ] switch

Calls can be made using voice command.

To end Intelligent Assistant, press and hold the talk switch.

INFORMATION

- While Apple CarPlay or Android Auto is connected, press [ ] to display the Apple CarPlay or Android Auto phone screen on the multimedia system.
- While Apple CarPlay and a hands-free phone are connected, press [ ] to display the Apple CarPlay or multimedia system phone screen. The function that was used last is prioritized. If neither has been used, the primary device is prioritized.
- While Android Auto and a hands-free phone are connected, press [ ] to display the multimedia system phone screen.
- When receiving a call, the incoming call screen for the cellular phone (hands-free phone, Apple CarPlay, or Android Auto) is displayed.

Related Links

Precautions when using Apple CarPlay and Android Auto(P. 120)

Starting voice control(P. 38)

Making calls from call history

Calls can be made to phone numbers that have been recorded in the call history as outgoing or incoming calls.

1 **Touch [ ] from the main menu.**

2 **Touch [Recents].**

3 **Select the contact.**

For phone numbers that are not registered in the contact, the phone number will be displayed as it is.

4 **Touch the desired phone number.**

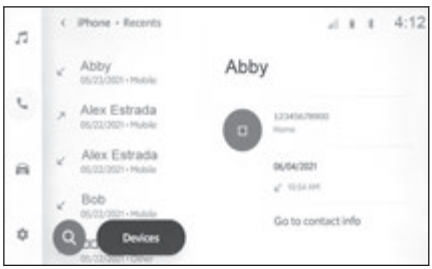

INFORMATION

- The latest 100 entries in the call history are shown. If the call history exceeds 100 entries, history items are automatically deleted starting from the oldest.
- The outgoing call history is registered as follows, depending on conditions.
  - If the call was placed to a phone number registered in contacts or to the multimedia system, the name and image data are also registered if they exist.
- The incoming call history is registered as follows, depending on conditions.
  - If the call was received from a phone number registered in contacts, the name and image data are also registered if they exist.
  - If multiple calls were received from the same phone number, all are registered.
  - Missed calls and declined calls are also registered.
  - If the other party does not support caller ID, the call is registered as "Unknown".
- Calls that were placed on hold are also registered to the call history.
- Depending on the model of cellular phone, it may not be possible to make international calls.

Making calls from the favorites list

Make a call from your favorites list.

1 **Touch [ ] from the main menu.**

2 **Touch [Favorites].**

3 **Select the person you want to call from your favorites list.**

4 **Touch the desired phone number.**

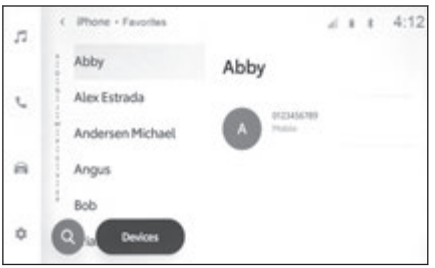

INFORMATION

- When [**Sync contacts**] is ON, cellular phone favorites are automatically transferred to the multimedia system.
- Depending on the cellular phone model, favorites cannot be transferred.

Related Links

Setting Bluetooth® devices(P. 89)
Transferring contact data(P. 214)

Making calls from contacts

Make a call from the contacts registered on the multimedia system.

1 **Touch [ ] from the main menu.**

2 **Touch [Contacts].**

3 **Select a contact.**

4 **Touch the desired phone number.**

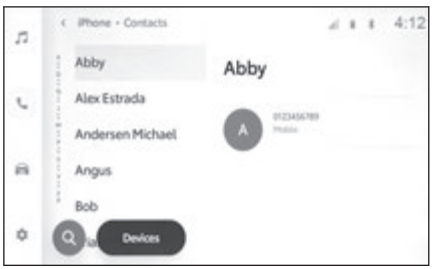

INFORMATION

- If no contact data has been registered, contact data must be transferred to the multimedia system.
- The contact data of the hands-free phone that is connected is displayed on the multimedia system. When the hands-free phone is switched during a 2-phone connection, the contact data also switches.

Related Links

Transferring contact data(P. 214)

Making calls from keypad

Enter the phone number on the keypad to make a call.

1 **Touch [ ] from the main menu.**

2 **Touch [Keypad].**

3 **Enter the phone number.**

4 **Touch [ ], or press the [ ] switch on the steering wheel.**

Calls can also be made by touching a contact displayed on the sub menu.



Related Links

Operating with the steering switches(P. 197)

Answering calls

When there is an incoming call, the incoming call sounds and the incoming call screen or incoming call notification is displayed.

- **Answer the call by doing one of the following.**
  - Touch [ ].
  - Press the [ ] switch on the steering wheel.
  - Speak a voice command to answer the phone with the Intelligent Assistant system.

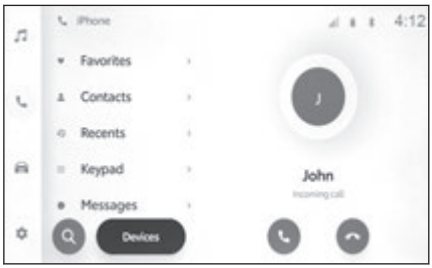

INFORMATION

- The incoming call screen is not displayed while the peripheral monitoring screen is being displayed. Incoming call notification is provided by ringtone only.
- During an incoming call, all sounds other than those coming from the hands-free call are muted. However, voice guidance with a higher priority than the hands-free call is not muted.
- Even if the cellular phone ringtone is set on the multimedia system, the multimedia system may output a different ringtone depending on the cellular phone settings.
- Depending on the cellular phone settings such as drive mode, you may not be able to receive calls.
- Depending on the cellular phone model, the following may occur.
  - The ringtone may be heard from both the vehicle speakers and the cellular phone.
  - When receiving a call, the caller's phone number may not be displayed.
  - If a call was received by operating the cellular phone directly, or if the cellular phone has been set to automatically answer calls, the call may stay on the cellular phone.
  - If there was an incoming call while the cellular phone is transmitting data, the incoming call screen may not be displayed on the multimedia system and the ringtone may not sound.
- The call is declined when a call is received from a phone number that is set to be declined in the cellular phone settings.

Related Links

Operating with the steering switches(P. 197)

Setting Bluetooth® devices(P. 89)

Declining calls

On the multimedia system, calls can be declined using several methods.

- **When receiving a call, perform any of the following operations to decline the call.**
  - Touch [ ].
  - Operate the cellular phone directly.

INFORMATION

- The call is declined when a call is received from a phone number that is set to be declined in the cellular phone settings.
- Setting [**Do not disturb**] in the Bluetooth® settings to on enables hands-free calls to be declined and notification by audio and display to be disabled. However, this is not applied to the phone function of Apple CarPlay or Android Auto. Even while a hands-free phone and Android Auto are connected, this is not applied to the hands-free call function.

Related Links

Operating with the steering switches(P. 197)

Performing operations from the call screen

During a call, various operations can be performed from the call screen.

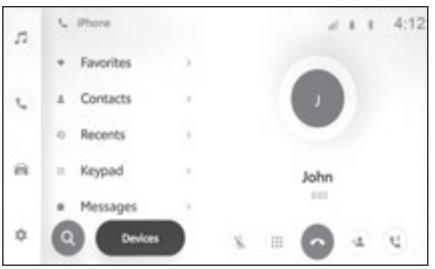

[ ] : Mutes the sound transmission so that the other party on the call cannot hear you speak. While muted, the button changes to blue. To deactivate, touch the button again.

You can hear what the other party is saying.

[ ] : Displays the keypad screen. The call screen will be displayed as small while the keypad screen is displayed.

[ ] : Hang up during a call.

[ ] : Display the contact list in the sub menu to make a call to another person.

You can make a call to another person by touching the phone number during a call to make a call.

[ ] : Allows a call to be switched between the cellular phone and the multimedia system. During a cellular phone call, the button changes to blue.

[ ] : Cancel the pending call. Only displayed on hold.

[ ] : Reduce the call screen.

[ ] : Display the call screen in the main area.

INFORMATION

- Depending on the state of the multimedia system, the call screen may be reduced or not displayed.

- Switching calls may not be possible depending on the cellular phone model.
- Calls cannot be switched from the hands-free system to the cellular phone while driving. Switching calls may not be possible depending on the cellular phone model.
- If the cellular phone you are talking on is connected to the multimedia system as a hands-free phone, the call screen is displayed. Depending on the model of cellular phone, the call will either continue on the cellular phone or switch to a call on the multimedia system.
- If you operate the power switch during a call with a hands-free phone, the call may be disconnected or continued on the cellular phone depending on the cellular phone model. If you want to continue on your cellular phone, you may need to operate your cellular phone.

Related Links

Operating with the steering switches(P. 197)

Answering a second call

If you receive a second call from another party during an ongoing call, call-waiting can be used to handle both calls. When a second call is received, an incoming call notification is displayed at the top of the screen.

INFORMATION

- You must have a call waiting contract with your cellular phone provider.
- If the cellular phone does not support HFP Ver. 1.5 or later, call-waiting will not be available.
- Depending on the cellular phone model and subscription details, it may not be possible to use this function.

- **When receiving a second call, touch [ ] on the screen, or press the [ ] switch on the steering wheel.**

  Answering the second call places the previous call on hold.

  The caller will be switched each time [**Swap calls**] is touched.

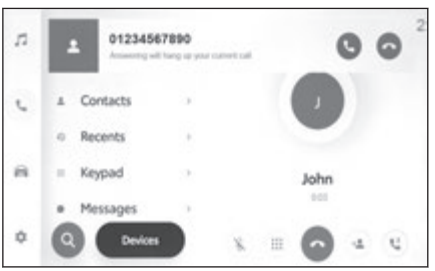

Related Links

Operating with the steering switches(P. 197)

Declining second calls

If you receive a second call from another party during an ongoing call, call-waiting can be used to decline the call.

When receiving a second call, touch [ ].

INFORMATION

Depending on the model of cellular phone, both calls may be disconnected. Refer to the instruction manual included with the cellular phone.

Related Links

Operating with the steering switches(P. 197)

Making a call to another party during an ongoing call

You can call a new third party during an ongoing call.

1 **Touch [ ] on the call screen.**

2 **Select the contact.**

3 **Select the phone number.**

This function puts the other party on hold during a call.

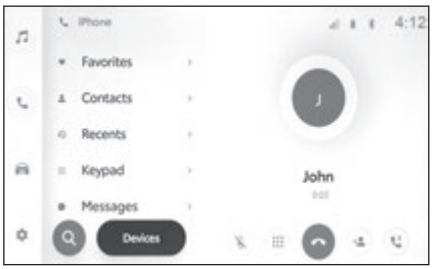

INFORMATION

- You must have a call waiting contract with your cellular phone provider.
- If the cellular phone does not support HFP Ver. 1.5 or later, call-waiting will not be available.
- Depending on the cellular phone model and subscription details, it may not be possible to use this function.

Making conference calls

Add the person on hold when talking to another party while a call is on hold.

● **Touch [Merge calls] during an ongoing call with a third party.**

Calls on hold are taken off hold and switched to a conference call.

INFORMATION

- A subscription for conference calls may be needed to be purchased from your cellular phone provider.
- Depending on the cellular phone model and subscription details, it may not be possible to use this function.
- When the conference call ends, the call ends with all members of the conference call.

Ending calls

Several methods are available for ending a hands-free call.

● **Perform any of the following operations during a call.**

- Press the [ ] switch on the steering wheel.
  Press and hold to end all calls, including the calls on hold.
- Touch [ ] while making a call or on the call screen.
- Operate the cellular phone to end the call.

Related Links

Operating with the steering switches(P. 197)

Switching phones for hands-free calls

If two cellular phones are connected as hands-free phones, each cellular phone can be used. The hands-free system makes it possible to switch cellular phones. The hands-free phone screen displays the selected cellular phone data, such as contacts and history. Functions such as incoming calls can also be used with the unselected cellular phone.

To connect two hands-free phones, you need to set a driver.

1 **Touch [ ] from the main menu.**

2 **Touch [Devices].**

3 **Select the cellular phone you want to use.**

A cellular phone that is on a call, receiving a call, or making a call cannot be selected.

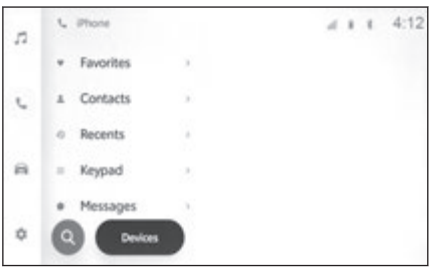

INFORMATION

- If making a call from a screen other than the hands-free phone screen, the call is placed as the primary device.
- If you are on a hands-free call using either one of the devices, calls cannot be placed from the other device.
- When a hands-free call is being made by any of the hands-free phones and an incoming call is answered by another hands-free phone, the first call is disconnected.
- The following functions are also available on the unselected cellular phone.
  - Phone incoming call function
  - Message receiving and sending functions (when receiving a message)
- The primary device will not necessarily be changed even if the cellular phone is switched.

Related Links

Linking a User Profile(P. 46)
Changing and linking a User Profile(P. 54)

Setting a Bluetooth® device as a primary device(P. 109)

Transferring contact data

Up to 5,000 contacts can be registered for each connected cellular phone. Only the contacts corresponding to the connected cellular phone can be displayed. In the contacts, up to 4 phone numbers can be registered for each contact. Contacts are managed for each connected phone.

This function can be used with cellular phones that support automatic contact data transfer (PBAP). Refer to the included instruction manual or compatible profiles for the connected cellular phone, to determine whether it supports automatic contact data transfer (PBAP).

To transfer contacts with automatic contact data transfer (PBAP), [**Sync contacts**] must be set to on in the Bluetooth® settings.

INFORMATION

- When transferring contact data, each data is subject to the following restrictions.
  - When five or more phone numbers are registered to a single contact, all phone numbers will be registered to the multimedia system as multiple contacts with the same name.
  - The name is transferred at the same time as the phone number. Depending on the model, some letters, such as symbols, or all letters may not be transferred. Furthermore, even if they are transferred they may not be displayed correctly.
  - Typically, secret memory is not read. (It is possible in some cases, depending on cellular phone specifications)
  - The group names registered to the cellular phone are not transferred.
  - The phone number type shown in contacts on the multimedia system is automatically assigned based on information from the source device. However, depending on the model of cellular phone and usage environment, the icons may all be identical.
  - Depending on the model of cellular phone, the cellular phone's pin number and an authentication password may need to be entered when transferring contact data. For details, refer to the included instruction manual for the connected cellular phone.
- Models of cellular phone that support batch transfer have the following characteristics when transferring contact data.
  - Transfer may take as long as 10 minutes.

- Even if the contact list transfer screen is being displayed, it is possible to switch to another screen. In this case, contact list transfer will continue.

- Events will be handled in the following way during contact list transfer.
  - If the power switch is turned off during contact list transfer, the transfer will be canceled. In this case, start the EV system and carry out transfer operations again.
- In the following cases, the contact data being transferred is not saved. (Some of the transferred data is not saved either.)
  - When automatic transfer (PBAP) ends in the middle due to the memory capacity of the multimedia system.
  - When automatic transfer (PBAP) is interrupted for some reason.
- The multimedia system's contact data cannot be transferred to the cellular phone.
- During contact list transfer, the Bluetooth® audio connection may be disconnected. It will be reconnected once transfer is complete. (Reconnection may not be possible for some models)
- When transferring, make sure the multimedia system has been started.
- The automatic contact data transfer (PBAP) function enables the transfer of contacts, favorites, and history to the multimedia system. Some cellular phone models do not allow favorites to be transferred.
- If [**Sync contacts**] is on, cellular phone favorites will be automatically transferred to the multimedia system.
- Depending on the model, it may be necessary to perform operations on the cellular phone when transferring contact data with automatic contact data transfer (PBAP).
- If you want to transfer contacts by automatic transfer (PBAP), you need to enable the contact sharing setting on your cellular phone.
- If automatic contact data transfer (PBAP) does not start, it may start if you end all other functions.
- To transfer the contact image data, [**Sync contacts**] must be set to on in the Bluetooth® settings.

Related Links

Bluetooth® specifications and compatible profiles(P. 99)

Setting Bluetooth® devices(P. 89)

Precautions when using the message function

Messages are transferred from the cellular phone connected for hands-free calls. The multimedia system can be used to check, reply, and send messages (excluding MMS). Depending on the cellular phone model being connected, it may not be possible to transfer messages to the multimedia system. If the cellular phone does not support messaging, this function cannot be used.

This function can be used with cellular phones that support HFP and MAP. Refer to the instruction manual included with the cellular phone or the compatible profiles for the cellular phone to determine whether or not it supports HFP or MAP.

INFORMATION

- You need to enable the message sharing setting from your cellular phone settings.
- This function cannot be used during emergency calls.
- E-mail function is not supported.
- Depending on the cellular phone model, it may not be possible to use the reply function.
- Messages sent and received after connecting to the multimedia system are transferred to the multimedia system.
- Depending on the connected cellular phone model, it may be necessary to perform additional operations on the cellular phone.
- For SMS messages, the subject is not displayed.
- Depending on the cellular phone model, the subject name of a received MMS may not be displayed.
- Text messages can be replaced with voice data while driving.
- If [**Auto read messages**] is on, messages are read aloud.
- Outgoing messages created using Intelligent Assistant can be read aloud before being sent.
- Some information may not be displayed depending on your cellular phone model and registration status to the multimedia system.

Related Links

Setting Bluetooth® devices(P. 89)

Bluetooth® specifications and compatible profiles(P. 99)

Checking messages

Sent and received messages can be checked.

1 **Touch [ ] from the main menu.**

2 **Touch [Messages].**

3 **Select the message sender.**

If the body of the message fails to be read, start over from the beginning.

4 **Select each item as necessary.**

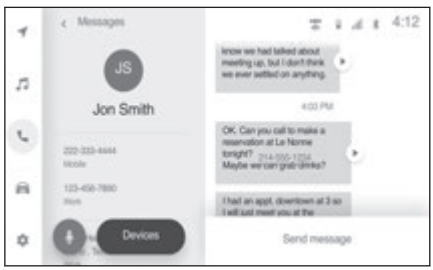

[ ] : Reads the message aloud. To stop the message being read aloud, touch[ ].

[**Send message**] : Intelligent Assistant starts.

INFORMATION

When [**Auto read messages**] is enabled, unread messages will be read out starting with the oldest.

Related Links

Replying to messages(P. 218)

Making calls from the message function(P. 220)

Checking new messages

When an SMS or MMS message is received, a new message notification is displayed at the top of the screen.

● **The following operations can be performed when a message is received.**



[ ] : Allows a reply to the message.

When a message is replied, all of the messages from the same sender will turn to already read.

[▶] : Reads the message aloud. The read-out messages will turn to already read.

Related Links

Replying to messages(P. 218)

Replying to messages

It can reply to received message. It can reply by voice control system from beginning. In order to reply by voice, touch the [🎤], and follow the displayed instruction.

1. **Touch [📞] from the main menu.**
2. **Touch [Messages].**
3. **Select the message sender.**
   - Chat is displayed.
4. **Touch [Send message].**
5. **Enter a message using Intelligent Assistant.**
   - If there is a valid subscription to the service*1, Intelligent Assistant can be used to enter the text of the message. (Templates can also be used to reply.)
   - Replies can be sent with templates using Intelligent Assistant. (Quick reply)

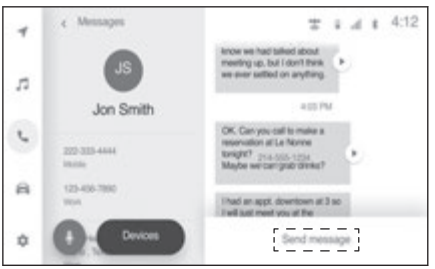

Related Links

Using the Intelligent Assistant system(P. 35)

Sending new messages

New SMS messages can be created. MMS is not supported.

1. **Touch [📞] from the main menu.**
2. **Touch [Messages].**

*1 : This function is not available in some regions.

3 **Touch [New message].**

4 **Enter the message content using Intelligent Assistant.**

5 **Send the message.**

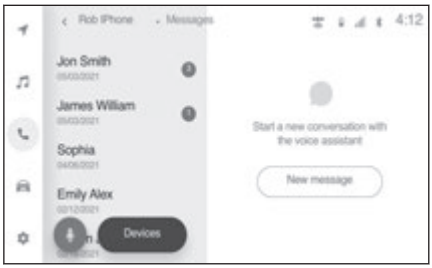

Related Links

Using the Intelligent Assistant system(P. 35)

Making calls from the message function

Hands-free calls can be made using the message function.

● **Touch the blue number to make a call.**

Consecutive numbers may be recognized as phone numbers. In addition, some phone numbers, such as phone numbers from other countries, may not be recognized.

7 Connected Services

7-1. Connected Services overview

Functional overview ... 222

Type A: Function achieved by using DCM and the system 224

Type B: Function achieved by using DCM. 225

Type C: Function achieved by using DCM and a smartphone.... 227

Functional overview

Connected Services include following services:

- User Profile
- Drive Connect (including Cloud Navigation, Intelligent Assistant, and Destination Assist)
- Wi-Fi® Connect (including Wi-Fi® Hotspot and Integrated Streaming)
- OTA (Over The Air updates)*1
- Safety Connect
- Remote Connect
- Service Connect

Types of functions

The functions included are classified into the following types.

- Type A: Function achieved by using DCM and the system
- Type B: Function achieved by using DCM
- Type C Function achieved by using DCM and a smartphone

Function	Type
User Profile, Drive Connect, Wi-Fi® Connect, OTA	Type A
Safety Connect	Type B
Remote Connect, Service Connect	Type C

INFORMATION

Connected services functionality is dependent upon network reception level and signal strength.

Before using the function

Subscription

After you have accepted the Connected Services Agreement ("Connected Services Terms of Use" and "Connected Services Privacy Notice") on the Toyota App when you register the vehicle to your account, you can begin receiving services. A variety of subscription agreements are available. Contact your Toyota dealer, or call

*1 : Some OTA updates may require Wi-Fi® connection.

1-800-331-4331 in the United States, 1-877-855-8377 in Puerto Rico, or 1-888-869-6828 in Canada.

■ **Availability of function(s)**

These functions are not available in some countries, areas, or on some models.

Type A: Function achieved by using DCM and the system

The functionality of User Profile, Drive Connect (Cloud Navigation, Intelligent Assistant, Destination Assist), Wi-Fi® Connect (Wi-Fi® Hotspot, Integrated Streaming) is made possible through the shared work of the DCM and the system.

These services are available by subscription on select, telematics hardware- equipped vehicles and supported by the Toyota, which operates 24 hours a day, 7 days a week.

For details about:

- User Profile: (→ P.46)
- Intelligent Assistant: (→ P.35)
- Cloud Navigation: (→ P.142)
- Destination Assist:(→ P.150)
- Integrated Streaming: (→ P.185)
- Wi-Fi® Hotspot: (→ P.87)

Type B: Function achieved by using DCM

The functionality of Safety Connect is made possible by the use of a DCM.

For details, refer to the vehicle "OWNER'S MANUAL".

INFORMATION

- Free/Open Source Software Information

  This product contains Free/Open Source Software (FOSS). The license information and/or the source code of such FOSS can be found at the following URL.

  https://www.denso.com/global/en/opensource/dcm/toyota/

- Exposure to radio frequency signals:The system installed in your vehicle includes a low power radio transmitter and receiver. The system receives and also sends out radio frequency (RF) signals.
- In August 1996, the Federal Communications Commission (FCC) adopted RF exposure guidelines with safety levels for mobile wireless phones. Those guidelines are consistent with the safety standards previously set by both U.S. and international standards bodies.
  - ANSI (American National Standards Institute) C95.1 [1992]
  - NCRP (National Council on Radiation Protection and Measurement) Report 86 [1986]
  - ICNIRP (International Commission on Non-Ionizing Radiation Protection) [1996]
- These standards are based on comprehensive and periodic evaluations of the relevant scientific literature. Over 120 scientists, engineers, and physicians from universities, government health agencies, and industry reviewed the available body of research to develop the ANSI Standard (C95.1).
- The system complies with the FCC guidelines in addition to those standards.
- Contact with the Toyota response center is dependent upon the telematics device being in operative condition, cellular connection availability, navigation map data, and GPS satellite signal reception, which can limit the ability to reach the Toyota response center or receive support. Enrollment and Connected Services Agreement ("Connected Services Terms of Use" and "Connected Services Privacy Notice") required. A variety of subscription terms are available; charges vary by subscription term selected.
- The Toyota response center offers support in multiple languages.

- Select Safety Connect-subscribed vehicles are capable of communicating vehicle information. Please see the terms and conditions for additional details. Owners who do not wish to have their vehicle transmit this information can opt out at the time of enrollment or by calling 1-800-331-4331 in the United States, 1-877-855-8377 in Puerto Rico, or 1-888-869-6828 in Canada, and following the prompts for Safety Connect.
- For further details about the service, contact your Toyota dealer.
- The system functions are not subject to section 255 of the Telecommunications Act and the system is not TTY compatible.

Type C: Function achieved by using DCM and a smartphone

The functionality of Remote Connect and Service Connect are made possible by the use of a DCM and a smartphone.

For details about these services, refer to https://www.toyota.com/connected-services in the United States, https://www.toyotapr.com/serviciosconectados in Puerto Rico, and https://www.toyota.ca/toyota/en/about/connected-services in Canada.

Remote Connect

Remote Connect is a smartphone application that lets you view and remotely control certain aspects of your vehicle.

INFORMATION

- Availability of functions of the Remote Connect is dependent on network reception level.
- Remote Connect should only be used by authorized users.
- Laws in some communities may require that the vehicle be within view of the user when operating Remote Connect. In some states, use of Remote Connect may violate state or local laws. Before using Remote Connect, check your state and local laws.
- Any malfunction of the vehicle should be repaired by your Toyota dealer.
- Remote Connect is designed to work at temperatures above approximately -22 °F (-30 °C). This specification is related to the Remote Connect operation, but is dependent on the vehicle's operating temperature range which may be different.
- Content is subject to change without notice.
- Additional information can be found at https://www.toyota.com/connected-services in the United States, https://www.toyotapr.com/serviciosconectados in Puerto Rico, and https://www.toyota.ca/toyota/en/about/connected-services in Canada.

WARNING

Operating Remote Connect incorrectly may lead to unforeseen accidents or malfunctions. Check the vehicle condition and assume full responsibility before using.

Service Connect

Service Connect uses DCM to collect and transmit vehicle data that allows Toyota to provide:

- Vehicle Health Report (VHR) (Safety Recalls, Service Campaigns, Current Vehicle Alerts, Required Maintenance, and Vehicle Condition Status)
- Maintenance Notifications
- Vehicle Alert Notifications

INFORMATION

Availability of functions of the Service Connect is dependent on network reception level.

8 Parking assist system

8-1. Toyota parking assist monitor

Toyota parking assist monitor functions 230

Displaying the guide screen 232

Changing the guide line display mode 234

Toyota parking assist monitor 240

8-2. Panoramic view monitor

Panoramic view monitor functions 250

Display mode when the shift position is in "P" 253

Display mode when the shift position is in "D" or "N" 255

Display mode when the shift position is in "R" 264

The screen when the outside rear view mirrors are folded..... 272

Zooming in on the screen 273

Displaying transparent underfloor vision 274

Moving object alert..... 276

Changing the panoramic view monitor settings 278

Precautions for the panoramic view monitor..... 280

Toyota parking assist monitor functions*

Toyota parking assist monitor is a device that assists reversing when parking and in other situations by displaying vision from the rear camera installed on the vehicle.

INFORMATION

The illustrations of screens used in the descriptions are examples and may differ to the actual vision from the camera due to vehicle glare and such like.

⚠ WARNING

- Always make sure to visually check your surroundings while you are driving.
- Due to the characteristics of the camera lens, the actual position and distance of people and obstacles differ from what appears on the screen.

Displaying the Toyota parking assist monitor screen

When the shift position is in "R" with the power switch turned ON, the Toyota parking assist monitor screen will be displayed.

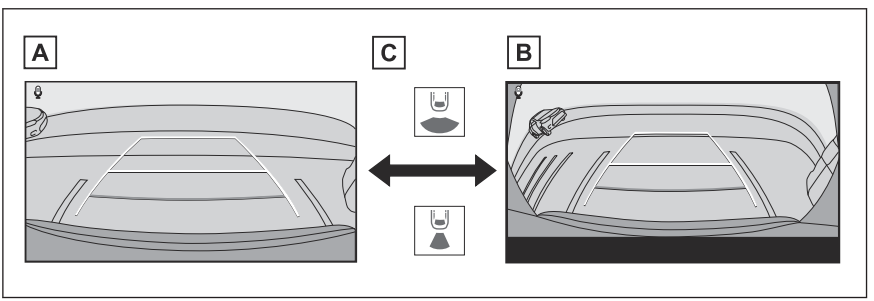

A Rear view

B Wide rear view

C Touch the display mode switching button

INFORMATION

- Display settings such as guide lines mode can be saved as the my settings by registering a driver, and then applied when entering the vehicle.

* : If equipped

● The Intelligent Assistant can be used to change the screen mode.*1

Related Links

Linking a User Profile(P. 46)
Starting voice control(P. 38)

*1 : This function is not available in some regions.

Displaying the guide screen

1. Shift the shift position to "R".
   - The mode switches each time touch the display mode button.

Rear view

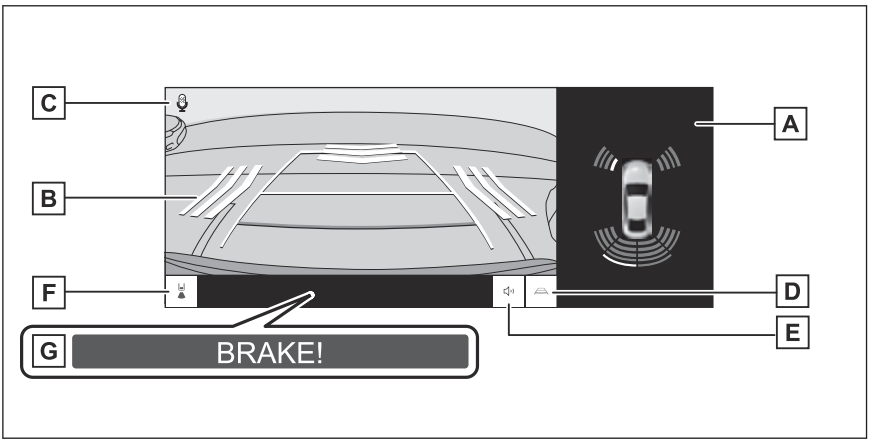

Wide rear view

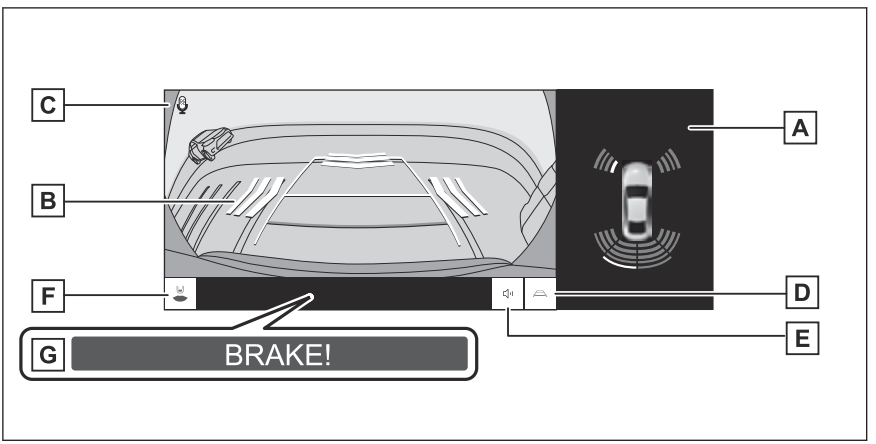

A Intuitive parking assist

When the sensor detects a stationary object, a pop-up is displayed on the top-left of the guide screen. (For details about the intuitive parking assist, see the vehicle "OWNER'S MANUAL".)

B RCTA (Rear Cross Traffic Alert) / RCD (Rear Camera Detection)*

An indicator is displayed on the screen in the following situations.

* : If equipped

- When the rear radar detects an obstacle or a vehicle approaching from the rear
- If the rear camera detects a pedestrian behind the vehicle

For details about RCTA (Rear Cross Traffic Alert) / RCD (Rear Camera Detection), see the vehicle "OWNER'S MANUAL".

C Voice recognition icon*1

This icon is displayed when the Intelligent Assistant is in operation.

D Guide line switching

Switches the guide line mode.

E Mute button

Temporarily mutes the intuitive parking assist buzzer sounds. Changing the shift position automatically cancels mute.

F Display mode switching

Switches display mode between the rear view and the wide rear view.

G PKSB (Parking Support Brake)*

If an obstacle that you may collide with is detected, a message is displayed on the screen. (For details about PKSB (Parking Support Brake), see the vehicle "OWNER'S MANUAL".)

⚠ WARNING

- The position of the guide lines displayed on the screen may change due to factors such as number of passengers, load weight, and road gradient. Always make sure to visually check behind you and your surroundings while you are driving.
- As the intuitive parking assist, Rear Cross Traffic Alert (RCTA) and RCD (Rear Camera Detection) displays are overlaid on the camera image, the surrounding brightness and colors may make them difficult to see.

Related Links

Changing the guide line display mode(P. 234)

Turning off the Toyota parking assist monitor

The Toyota parking assist monitor turns off when the shift position is in any position other than "R".

*1 : This function is not available in some regions.

* : If equipped

Changing the guide line display mode

The guide line display mode changes every time you touch the guide line switching button.

■ Estimated course lines mode

This mode displays estimated course lines that move in accordance with the operation of the steering wheel.

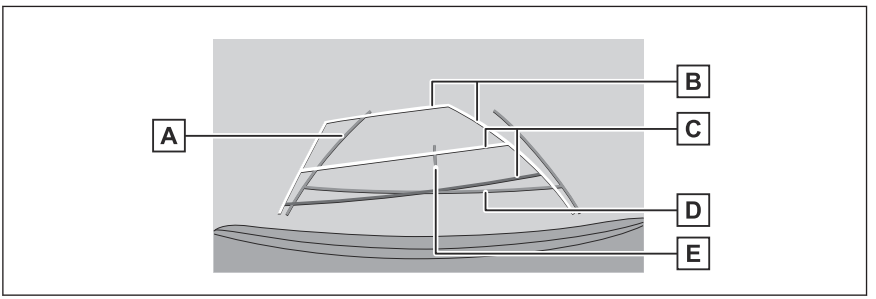

A Vehicle width guide lines

Displays course lines when the vehicle is being reversed in a straight line.

- The lines are wider than the actual width of the vehicle.
- When the vehicle is straight, the guide lines will overlap with the estimated course lines.

B Estimated course lines

Displays course lines (yellow) that are linked to operation of the steering wheel.

C Distance guide lines

Displays the distance behind the vehicle.

- The distance guide line is linked to the estimated course lines.
- Displays about 1.5 ft. (0.5 m) (red) and 3 ft. (1 m) (yellow) from the center of the end of the rear bumper.

D Distance guide line

Displays about 1.5 ft. (0.5 m) (blue) from the end of the rear bumper.

E Vehicle center guide line

Displays the center of the vehicle width guide lines.

■ Parking assist guide lines mode

This mode displays the steering wheel return points (parking assist guide lines). This mode is recommended for those who have a

sense of the vehicle and can park the vehicle without the aid of the estimated course lines.

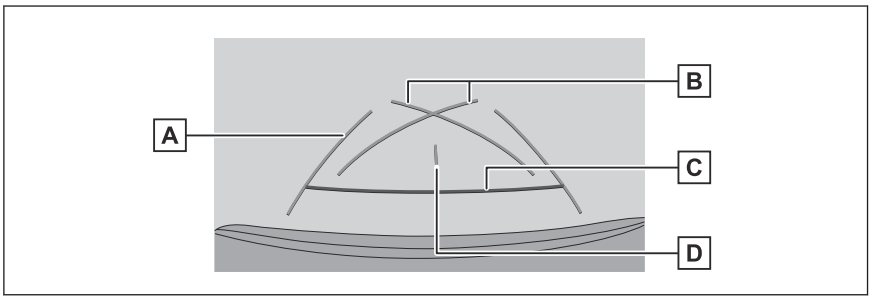

A Vehicle width guide lines

Displays course lines when the vehicle is being reversed in a straight line.

- The lines are wider than the actual width of the vehicle.

B Parking assist guide lines

Displays the course lines of the smallest turn possible behind the vehicle.

- Use the position of operating the steering wheel when parking as a guide.

C Distance guide line

Displays the distance behind the vehicle.

- Displays about 1.5 ft. (0.5 m) (red) from the center of the end of the rear bumper.

D Vehicle center guide line

Displays the center of the vehicle width guide lines.

■ Distance guide line mode

This mode only displays the distance guide line. It is recommended for those who do not need the guide lines.

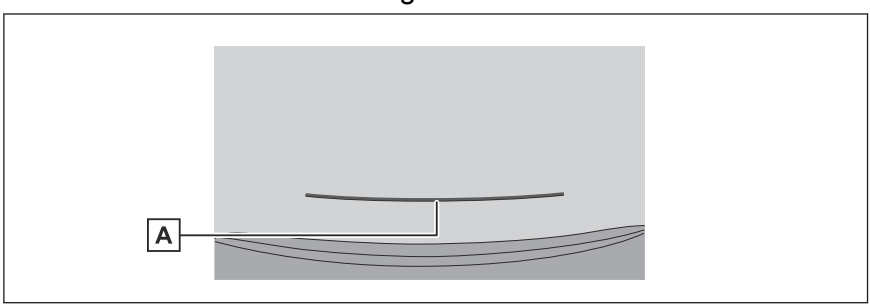

A Distance guide line

Displays the distance behind the vehicle.

- Displays about 1.5 ft. (0.5 m) (red) from the center of the end of the rear bumper.

■ Estimated course center line mode

This mode displays estimated course lines and a vehicle center guide line that move in accordance with the operation of the steering wheel.

Use this mode when you are approaching a signpost or pole with the center of the rear bumper.

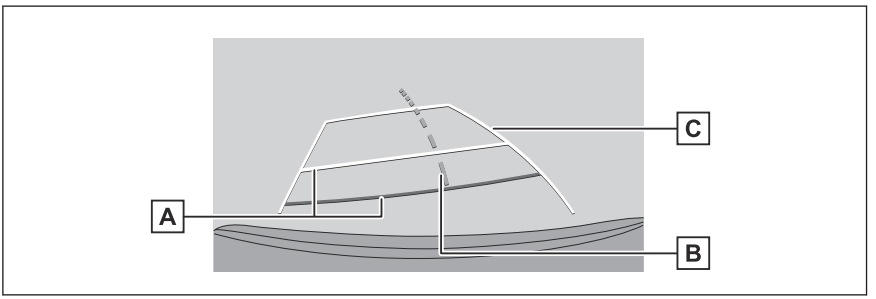

A Distance guide lines

Displays the distance behind the vehicle.

- The distance guide line is linked to the estimated course lines.
- Displays about 1.5 ft. (0.5 m) (red) and 3 ft. (1 m) (yellow) from the center of the end of the rear bumper.

B Estimated course center line

Displays the vehicle center guide line (green) that is linked to operation of the steering wheel.

C Estimated course lines

Displays course lines (yellow) that are linked to operation of the steering wheel.

INFORMATION

- The guide lines will not be displayed if the back door is not closed. If the back door is closed but the guide lines are still not displayed, have the vehicle inspected by your Toyota dealer.
- The intuitive parking assist is a feature that notifies the driver of nearby objects and displays an image of the direction of the detected object on the screen.

● The intuitive parking assist display position and the position of the object displayed on the camera image may not correspond.

⚠ WARNING

The vehicle width guide lines are wider than the actual width of the vehicle. Always make sure to visually check behind you and your surroundings when you are reversing.

Parking using the estimated course lines mode

1 **Shift the shift position to "R".**

2 **Turn the steering wheel so that the estimated course lines are within the parking space and then reverse slowly.**

A Estimated course lines

B Parking space

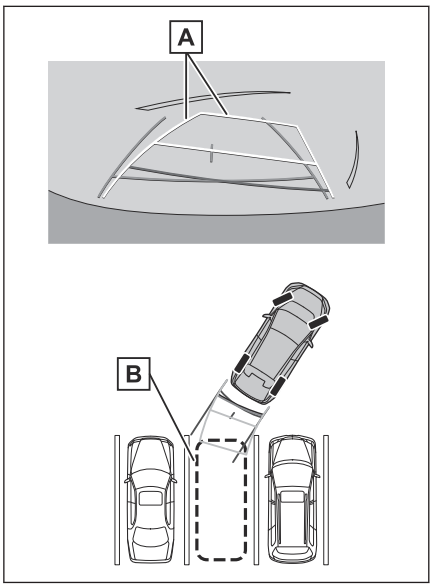

3 **When the rear of the vehicle has entered the parking space, turn the steering wheel so that the vehicle width guide lines are within the left and right dividing lines of the parking space.**

A Vehicle width guide lines

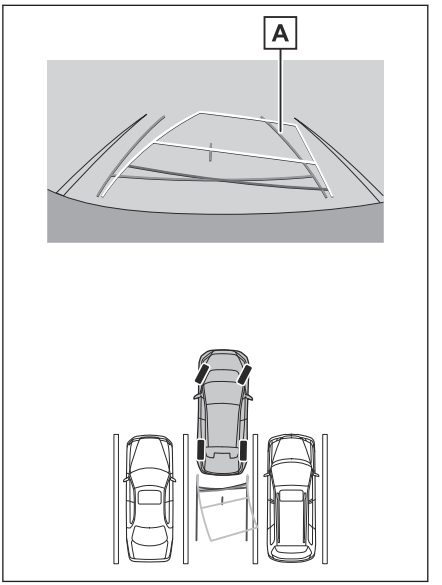

4 **Once the vehicle width guide lines and the parking space lines are parallel, straighten the steering wheel and reverse slowly until the vehicle has completely entered the parking space.**

5 **Stop the vehicle in an appropriate place to finish parking.**

Parking using the parking assist guide lines mode

1 **Shift the shift position to "R".**

2 **Reverse until the parking assist guide lines align with the dividing line of the parking space.**

A Parking space dividing line

B Parking assist guide lines

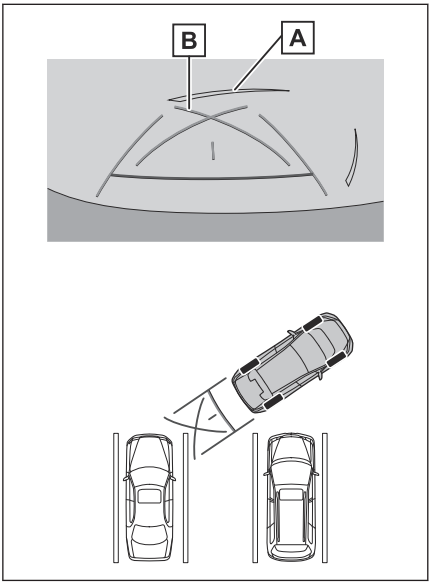

3 **Turn the steering wheel all the way, and reverse slowly.**

4 **Once the vehicle is parallel with the parking space, straighten the steering wheel and reverse slowly until the vehicle has completely entered the parking space.**

5 **Stop the vehicle in an appropriate place to finish parking.**

Toyota parking assist monitor

Driving precautions

The Toyota parking assist monitor is equipment that assists the driver reverse the vehicle. Always make sure to visually check behind you and your surroundings when reversing. If not, you may collide with other vehicles or an unforeseen accident may occur. Follow the below precautions when using the Toyota parking assist monitor.

⚠ WARNING

- Please do not rely solely on the Toyota parking assist monitor. Like any other vehicle, always drive carefully while directly confirming the safety of the rear and surroundings. Pay special attention to avoid contact with parked cars or obstacles in the vicinity.
- Never reverse only looking at the screen. The images displayed on the screen may differ to the actual situation. Hence, if only looking at the screen when reversing, you may collide with another vehicle or have an unforeseen accident. In particular, be careful not to collide with vehicles parked nearby or other objects. Always make sure to use the rear-view and side mirrors as well as visually check behind you and your surroundings when reversing.
- Depress the brake pedal to adjust your speed and slowly reverse the vehicle.
- If collision is likely with a nearby vehicle, obstacle, or person, or mount the shoulder of the road, depress the brake pedal to stop the vehicle.
- The instructions given for the Toyota parking assist monitor modes are only guidelines. When and how much to turn the steering wheel will vary according to traffic conditions, road surface conditions, vehicle condition, and so on when parking. It is necessary to be fully aware of this before using the Toyota parking assist monitor.
- When parking, be sure to check that the parking space will accommodate your vehicle before reversing into it.
- Do not use the Toyota parking assist monitor in the following cases:
  - On icy or slick road surfaces, or in snow
  - When using tire chains or emergency tires
  - When the back door is not closed completely
  - On roads that are not flat or straight, such as hills or bends
  - If the tires of a size other than specified by Toyota are installed

⚠ WARNING

- If the suspension has been modified
- If a non-Toyota product is installed on the area displayed on the screen

- In low external temperatures, the screen may darken or the image may become faint. The image could distort when the vehicle is moving, or you may not be able to see the image on the screen, so always visually check your surroundings while you are driving.
- If tire sizes are changed, the position of the guide lines displayed on the screen may be incorrect.
- The actual position and distance of people and obstacles that appear on the screen differ due to the characteristics of the camera lens.

⚠ NOTICE

- The camera may not function correctly and the image may be displayed on the screen in the following manner:
  - When the shift position is in "R", part or all of the screen may appear black
  - When the shift position is in "R", the screen may not change to the camera image
  - When a shift position other than "R" is selected, the image from the camera may remain displayed
  - The guide lines are not displayed on the camera image, and attention symbols and caution notices are displayed

Area displayed on the screen

■ Rear view

A Area displayed on the screen

B Objects not displayed on the screen

Areas close to both corners of the bumper will not appear on the screen.

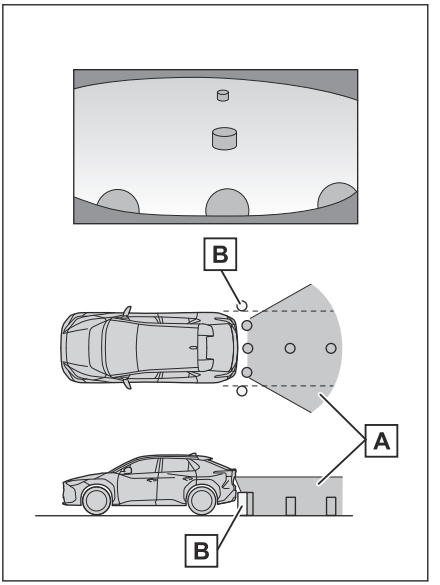

■ Wide rear view

A Area displayed on the screen

B Objects not displayed on the screen

Areas close to both corners of the bumper will not appear on the screen.

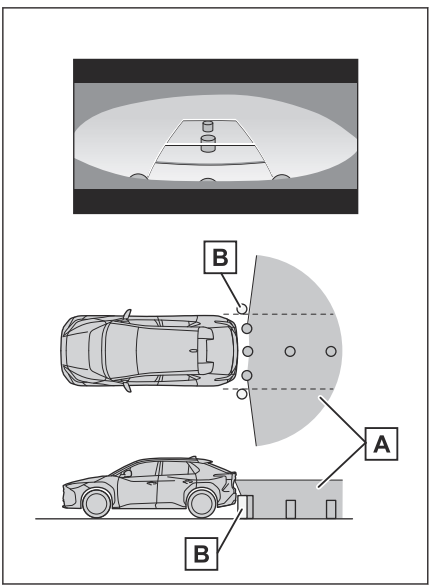

INFORMATION

- The range that is displayed on the screen may differ due to the state of the vehicle and road surface.
- Areas close to both corners of the bumper and under the bumper will not appear on the screen.
- The depth perception of the image displayed on the screen differs to the actual distance due to the camera lens characteristics.
- Objects that are higher than the camera may not appear in the monitor.

Related Links

Changing the screen display settings(P. 64)

Camera position

The Toyota parking assist monitor camera is in the locations shown in the figure.

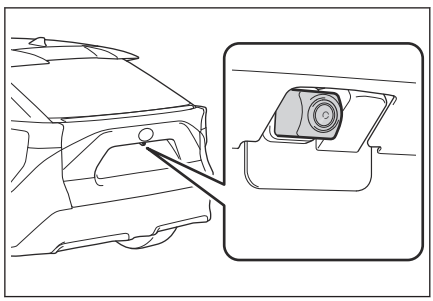

Cleaning the camera

If dirt or foreign matter, such as water droplets, snow, or mud, has stuck to the camera, you will not be able to see the image clearly. If that happens, splash the camera with a large amount of water and then wipe the camera lens clean with a soft, damp cloth.

NOTICE

- The Toyota parking assist monitor may stop functioning correctly. Take note of the following items:
  - Do not hit or apply a forceful impact on the camera. Doing so may change the position and mounting angle of the camera.
  - The camera is designed to be waterproof. Do not detach, disassemble, or modify it.
  - When washing the camera lens, splash the camera with a large amount of water and then wipe the camera lens clean with a soft,

⚠ NOTICE

damp cloth. Rubbing the camera lens forcibly may scratch the camera lens and images may no longer be able to be seen clearly.

- The camera cover is made of resin. Do not allow an organic solvent, car wax, window cleaner, or glass coating to adhere to the camera. If this happens, wipe it off immediately.
- Do not pour hot water on the vehicle in cold weather or apply other rapid changes of temperature.
- If you wash the vehicle with a high pressure car washer, do not point the hose directly at the camera or camera area. Applying strong water pressure may result in the camera malfunctioning.

● If the camera is hit, it may cause a camera malfunction. If this happens, have the vehicle inspected by your Toyota dealer as soon as possible.

Differences between the screen and the actual road

● The distance guide lines and the vehicle width guide lines may not actually be parallel with the dividing lines of the parking space, even when they appear to be so. Be sure to check visually.

● The distances between the vehicle width guide lines and the left and right dividing lines of the parking space may not be equal, even when they appear to be so. Be sure to check visually.

● The distance guide lines show a distance guide for flat road surfaces. Therefore, there is a margin of error between the guide lines on the screen and the actual distance and course on the road.

■ When the ground behind the vehicle slopes up sharply

The distance guide lines will appear to be closer to the vehicle than the actual distance. Thus, objects on up-slopes will appear to be farther away than they actually are. In the same way, there will be a margin of error between the guidelines and the actual distance and course on the road.

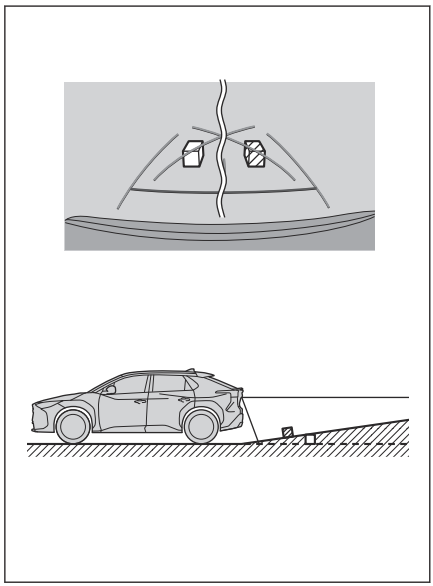

■ When the ground behind the vehicle slopes down sharply

The distance guide lines will appear to be further from the vehicle than the actual distance. Thus, objects on down-slopes will appear to be closer than they actually are. In the same way, there will be a margin of error between the guidelines and the actual distance and course on the road.

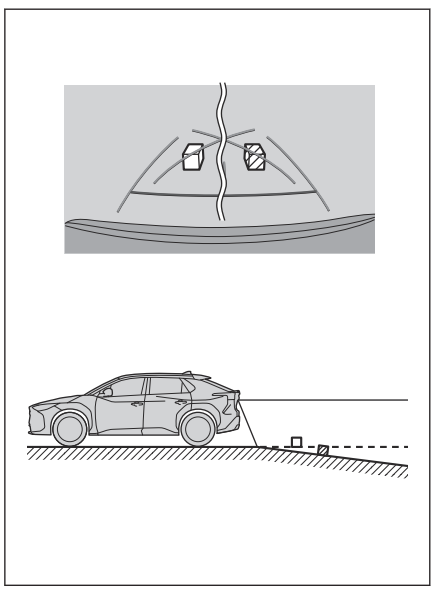

■ When any part of the vehicle sags

When any part of the vehicle sags due to the number of passengers or the distribution of the load, there is a margin of error between the guide lines on the screen and the actual distance and course on the road.

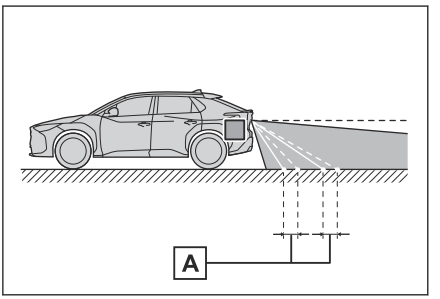

A Margin of error

■ Estimated course center line

As the guide lines are shown mid-air near the rear bumper, there are times that they may look like they are off-center.

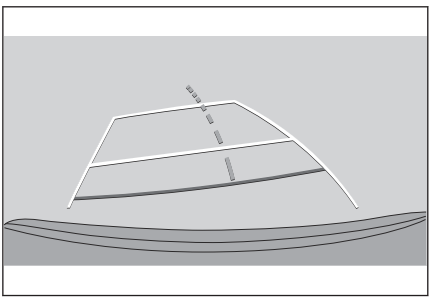

Differences between the screen and actual 3D objects

Since the estimated course lines and distance guide lines are displayed for a flat road surface, it is not possible to determine the position of three-dimensional objects. When approaching a three-dimensional object that extends outward (such as the flatbed of a truck), take note of the following cautions.

■ Estimated course lines

Make sure to visually check behind you and your surroundings. On the screen, a truck flatbed may appear to be outside of the estimated course lines and the vehicle does not look as if it will collide with the truck. However, the flatbed may actually cross over the estimated course lines and if you reverse as guided by the estimated course lines, the vehicle may hit the truck.

A Estimated course lines

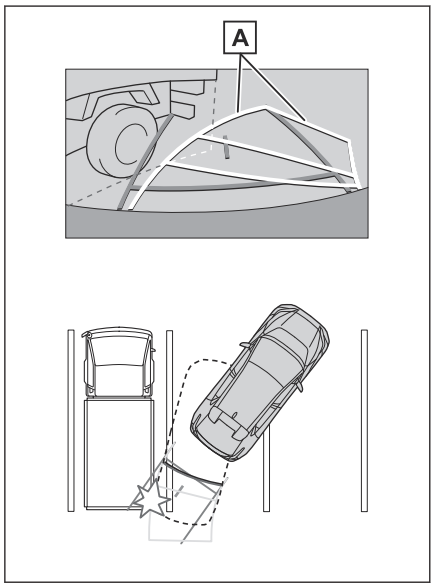

■ Distance guide lines

Make sure to visually check behind you and your surroundings. On the screen, the distance guide lines shows that a truck is parking at point B. However, in reality if you reverse to point A, you will collide with the truck. On the screen, it appears that point A is closest followed by points B and C. However, in reality, the distance to points A and C is the same, and point B is farther than A and C. The distance to point D is about 3 ft. (1 m).

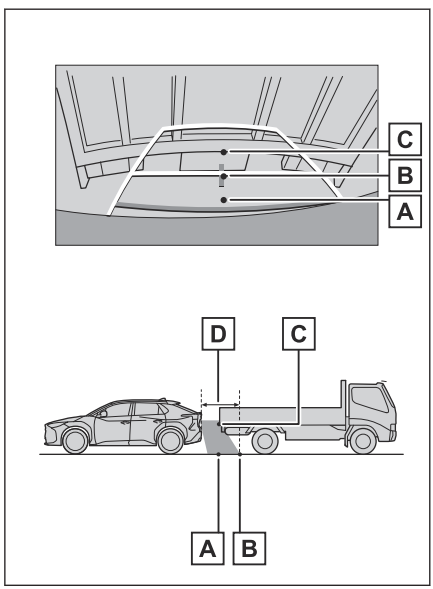

If you notice any symptoms

If you notice or are troubled by any of the symptoms below, check the issue again referring to the likely cause and solution.

If the symptom is not resolved by the solution, have the vehicle inspected by your Toyota dealer.

Symptom	Likely cause	Solution
The screen is difficult to see	● The vehicle is in a dark area or it is night. ● The temperature around the lens is either high or low. ● The outside temperature is low. ● There are water droplets on the camera. ● It is raining or humid. ● Foreign matter (mud etc.) is stuck to the camera. ● Sunlight or headlights are shining directly into the camera. ● The vehicle is under fluorescent lights, sodium lights, mercury lights, etc.	Visually check your vehicle's surroundings while you are driving. (Use the Toyota parking assist monitor again once the camera and conditions have improved.) The procedure for adjusting the picture quality of the Toyota parking assist monitor is the same as the procedure for adjusting the multimedia screen.
The image is blurry	Dirt or foreign matter, such as water droplets, snow, or mud, has stuck to the camera lens.	Splash the camera with a large amount of water and then wipe the camera lens clean with a soft, damp cloth.
The screen is misaligned	The camera has received a strong impact.	Have the vehicle inspected by your Toyota dealer.
The guide lines are significantly misaligned	The camera position is misaligned.	Have the vehicle inspected by your Toyota dealer.
	● The vehicle is tilted (There is a heavy load on the vehicle, tire pressure is low due to a tire puncture, etc.). ● The vehicle is on an incline.	Visually check your vehicle's surroundings while you are driving.

Symptom	Likely cause	Solution
The estimated course lines move even though the steering wheel is straight (the vehicle width guide lines and estimated course lines are out of alignment)	There is a malfunction in the signals being output by the steering sensor.	Have the vehicle inspected by your Toyota dealer.
The guide lines are not displayed	The back door is open.	Close the back door. If this does not resolve the issue, have the vehicle inspected by your Toyota dealer.

Related Links

Changing the screen display settings(P. 64)

Panoramic view monitor functions*

The panoramic view monitor is a device that assists you in driving at low speeds by displaying seamless vision from above the vehicle on the screen that is a composite of images from the front, side, and rear cameras installed on the vehicle.

INFORMATION

The illustrations of screens used in the descriptions are examples and may differ to the actual vision from the camera due to vehicle glare and such like.

⚠ WARNING

- The panoramic view monitor is a device that assists you in checking around the vehicle. Always make sure to visually check your surroundings while you are driving.
- Due to the characteristics of the camera lens, the actual position and distance of people and obstacles differ from what appears on the screen.

Camera switch

Displays the panoramic view monitor and switches the display mode.

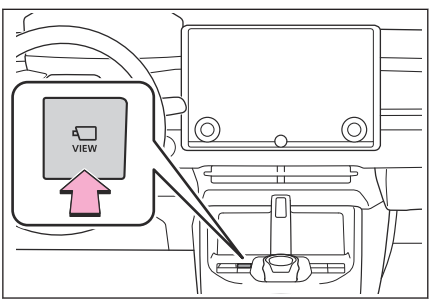

Displaying the panoramic view monitor screen

When you press the camera switch or shift the shift position to "R" while the power switch is in ON, the panoramic view monitor operates.

* : If equipped

■ Display mode when the shift position is in “P”

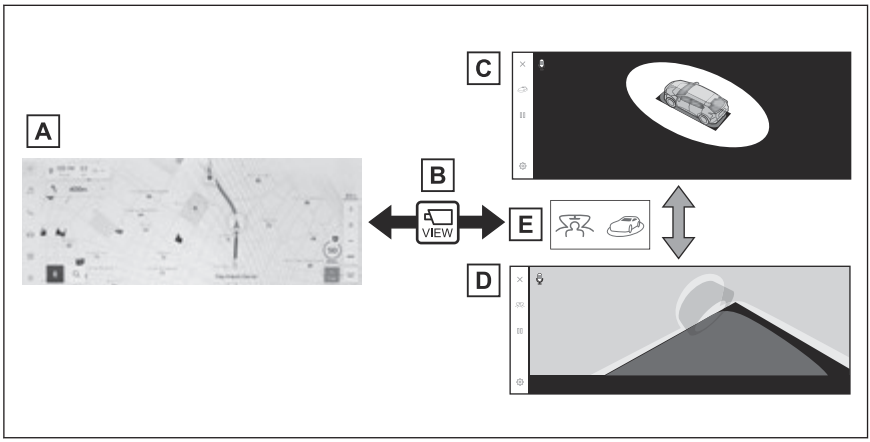

A Navigation screen, audio screen, etc.

B Pressing the camera switch

C Moving view

D See-through view

E Touch the display mode switching button

■ Display mode when the shift position is in “D” or “N”

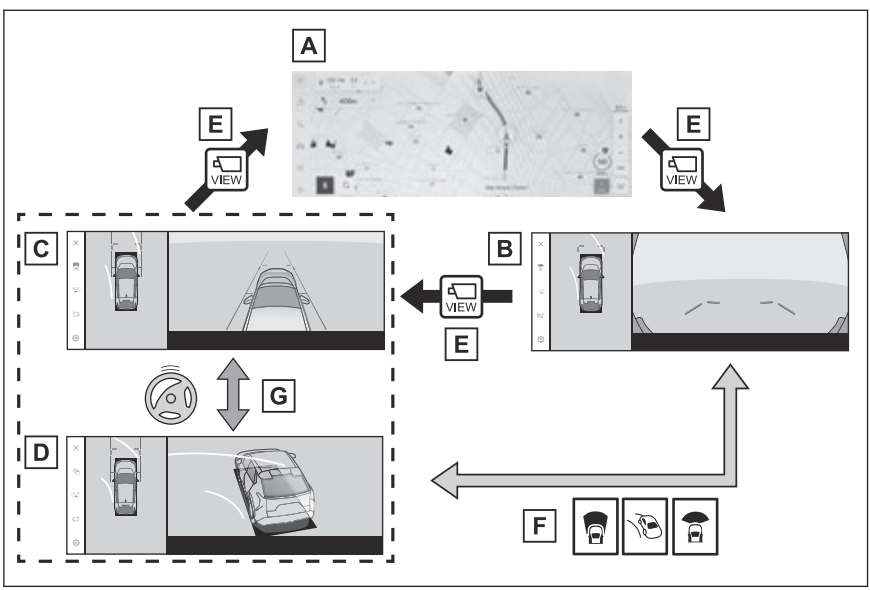

A Navigation screen, audio screen, etc.

B Wide front view & panoramic view

C Side clearance view & panoramic view

D Cornering view & panoramic view

E Pressing the camera switch

F Touch the display mode switching button

G When the steering wheel is turned by 180 degrees or more from the center (straight-line) position

■ Display mode when the shift position is in “R”

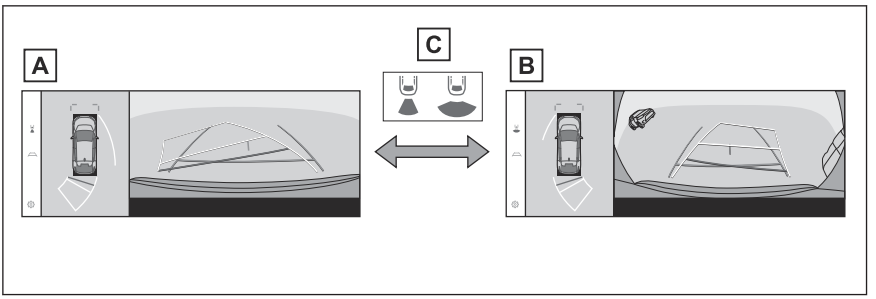

A Rear view & panoramic view

B Wide rear view & panoramic view

C Touch the display mode switching button

INFORMATION

- If the camera switch is pressed when the vehicle is moving at about 7 mph (12 km/h) or less, the panoramic view monitor screen will be displayed. When the vehicle exceeds about 7 mph (12 km/h), the panoramic view monitor screen will disappear and the previous screen will be displayed.
- Display settings such as guide lines mode can be saved as the my settings by registering a driver, and then applied when entering the vehicle.
- The Intelligent Assistant can be used to display the panoramic view monitor screen, change the screen mode and for other operations.

Related Links

Linking a User Profile(P. 46)

Starting voice control(P. 38)

Display mode when the shift position is in "P"

This is a mode that displays images combined from the cameras to enable you to check obstacles around the vehicle. Images are displayed as if seen from the driver's seat and on an angle from above the vehicle.

1. Shift the shift position to "P".
2. Press the camera switch.
   - The mode changes every time the display mode switching button is touched.
   - Pressing the camera switch again returns the display to the previous screen, such as the navigation screen.

■ See-through view

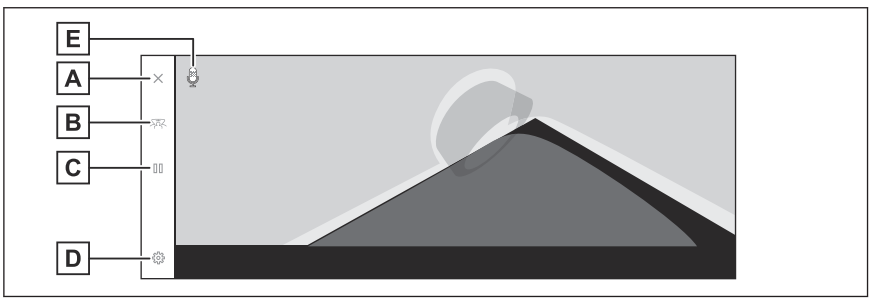

■ Moving view

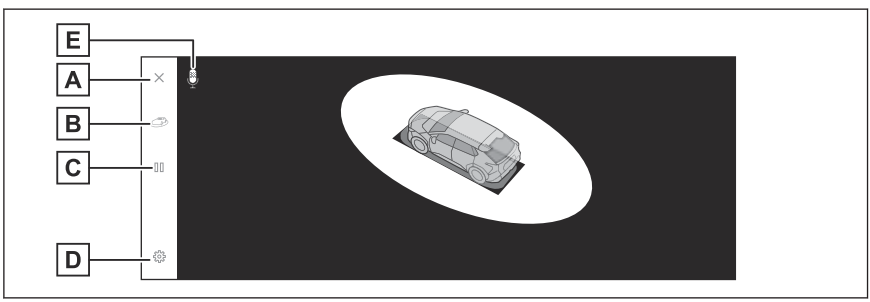

A Screen off button

Turns off the camera screen and returns the previous screen, such as the navigation.

B Display mode switching button

Switches between see-through view and moving view.

C Rotation pause/resume button

Pauses and resumes the rotation of the display.

D Customize settings button

Changes settings, such as the automatically display cornering view, the vehicle body color, the intuitive parking assist detection distance.

E Voice recognition icon*1

This icon is displayed when the Intelligent Assistant is in operation.

INFORMATION

- When the intuitive parking assist is turned on, you can display see-through view or moving view. (For details about the intuitive parking assist, see the vehicle "OWNER'S MANUAL".)
- You can also pause and resume the rotation of the see-through view and moving view screen by touching any point on the screen.

Related Links

Changing the panoramic view monitor settings(P. 278)

*1 : This function is not available in some regions.

Display mode when the shift position is in "D" or "N"

You can check for nearby pedestrians, bicycles, and vehicles at intersections with poor visibility and T-junctions by displaying vision of your surroundings on the screen. This mode also provides support to check both sides of the vehicle for safety, avoid collisions on narrow roads, and pulling over to the side of the road.

1. Shift the shift position to "D" or "N".
2. Press the camera switch.
   - The mode changes every time you press the camera switch.
   - If the cornering view mode is on and you turn the steering wheel more than 180 degrees from the straight position, the display will change from side clearance view & panoramic view to cornering view & panoramic view.

■ Wide front view & panoramic view

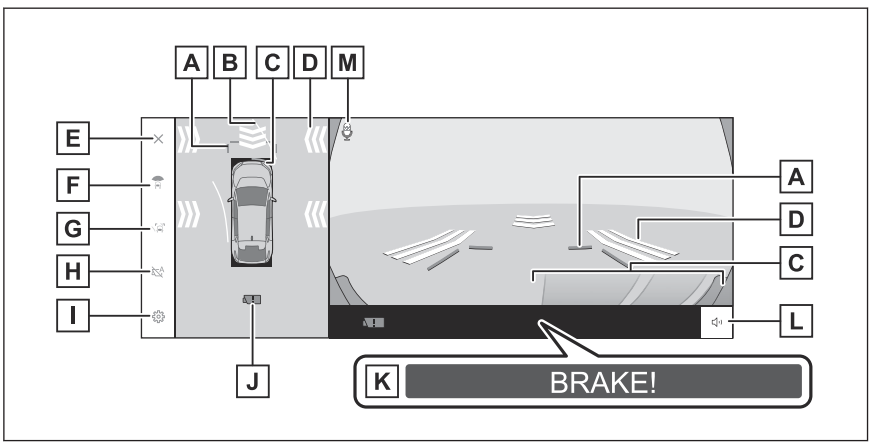

A Front distance guide lines

Displays about 3 ft. (1 m) in front of the vehicle.

B Forward estimated course lines

Displays course lines that are linked to operation of the steering wheel. (Yellow)

These lines are displayed when the steering wheel is turned more than 90 degrees from the straight position.

C Intuitive parking assist

Displays an indicator on the screen and sounds a buzzer when an object is detected by a sensor. (For details about the intuitive parking assist, see the vehicle "OWNER'S MANUAL".)

D Moving objects alert*

If moving objects alert detects nearby vehicles and/or obstacles from the front or side of the vehicle, an indicator is displayed on the screen.

E Screen off button

Turns off the camera screen and returns the previous screen, such as the navigation.

F Display mode switching button

Switches display mode every time touch the button.

G Guide line switching button

Switches guide line mode every time touch the button.

H Automatic display button

Turns auto display mode on or off. When the shift position is in "D" or "N", wide front view & panoramic view or side clearance view/cornering view & panoramic view will be automatically displayed in accordance with the vehicle speed.

I Customize settings button

Changes settings, such as the automatically display cornering view, the vehicle body color, the intuitive parking assist detection distance.

J Camera dirt detection icon

This icon is displayed when dirt is detected on the camera.

K PKSB (Parking Support Brake)

If an obstacle that you may collide with is detected, a message is displayed on the screen. (For details about PKSB (Parking Support Brake), see the vehicle "OWNER'S MANUAL".)

L Mute button

This button temporarily mutes the intuitive parking assist/moving objects alert sound.

M Voice recognition icon*1

This icon is displayed when the Intelligent Assistant is in operation.

* : If equipped

*1 : This function is not available in some regions.

■ **Side clearance view & panoramic view**

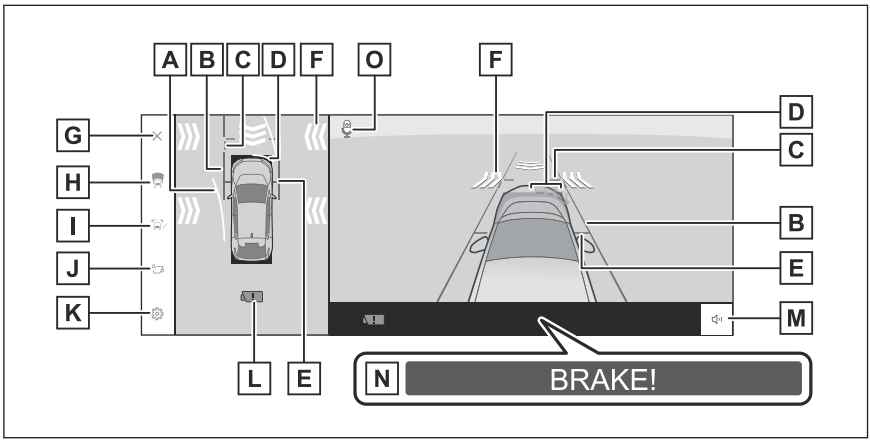

■ **Cornering view & panoramic view**

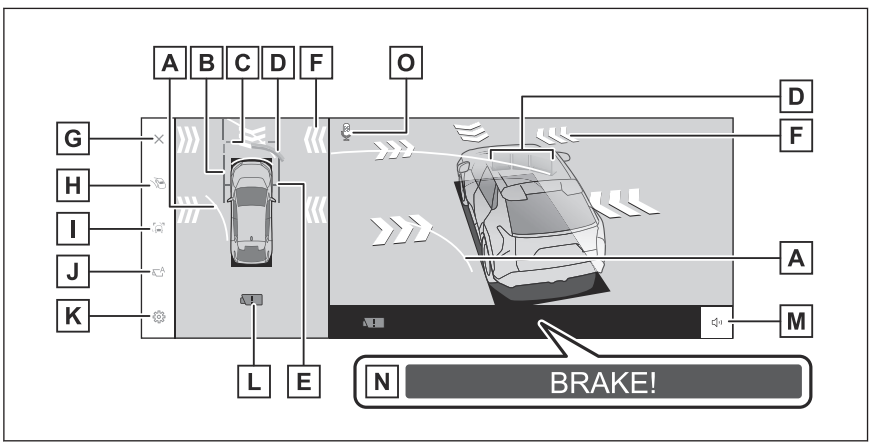

A Forward estimated course lines

Displays course lines that are linked to operation of the steering wheel. (Yellow)

These lines are displayed when the steering wheel is turned more than 90 degrees from the straight position.

B Vehicle width guide lines

Shows guide lines of the vehicle's width including the outside rear view mirrors.

C Front distance guide lines

Displays about 3 ft. (1 m) in front of the vehicle.

D Intuitive parking assist

Displays an indicator on the screen and sounds a buzzer when an object is detected by a sensor. (For details about the intuitive parking assist, see the vehicle "OWNER'S MANUAL".)

E Front tire guide lines

Displays the position of the front tires.

F Moving objects alert*

If moving objects alert detects nearby vehicles and/or obstacles from the front or side of the vehicle, an indicator is displayed on the screen.

G Screen off button

Turns off the camera screen and returns the previous screen, such as the navigation.

H Display mode switching button

Switches display mode every time touch the button.

I Guide line switching button

Switches guide line mode every time touch the button.

J Automatic display button

Turns the auto display mode on or off. When the shift position is in "D" or "N", wide front view & panoramic view or side clearance view/ cornering view & panoramic view will be automatically displayed in accordance with the vehicle speed.

K Customize settings button

Changes settings, such as the automatically display cornering view, the vehicle body color, the intuitive parking assist detection distance.

L Camera dirt detection icon

This icon is displayed when dirt is detected on the camera.

M Mute button

This button temporarily mutes the intuitive parking assist/moving objects alert sound.

N PKSB (Parking Support Brake)

If an obstacle that you may collide with is detected, a message is displayed on the screen. (For details about PKSB (Parking Support Brake), see the vehicle "OWNER'S MANUAL".)

O Voice recognition icon*1

This icon is displayed when the Intelligent Assistant is in operation.

* : If equipped

*1 : This function is not available in some regions.

INFORMATION

- When the intuitive parking assist is turned on, you can display side clearance view & panoramic view/cornering view. (For details about the intuitive parking assist, see the vehicle "OWNER'S MANUAL".)
- The display position of the intuitive parking assist may not match the position of the obstacle displayed in the camera image.

⚠ WARNING

- The position of the guide lines displayed on the screen may change due to factors such as number of passengers, load weight, and road gradient. Always make sure to visually check behind you and your surroundings while you are driving.
- The intuitive parking assist display and moving objects alert are overlapped and displayed on the camera image, so it may be difficult to see depending on the brightness of the surroundings and colors.

Related Links

Changing the guide line display mode(P. 259)
Auto display mode(P. 260)
Changing the panoramic view monitor settings(P. 278)

Changing the guide line display mode

The guide line display mode changes every time the guide line display mode button is touched.

■ Distance guide lines mode

Displays about 3 ft. (1 m) in front of the vehicle. (blue)

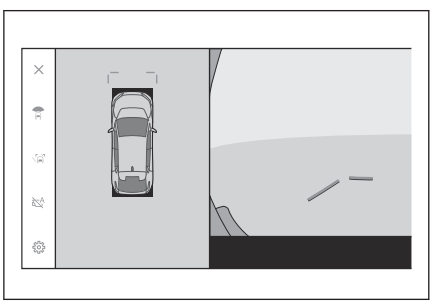

■ Estimated course lines mode

Displays course lines that are linked to operation of the steering wheel. (Yellow) These lines are displayed when the steering wheel is turned more than 90 degrees from the straight position.

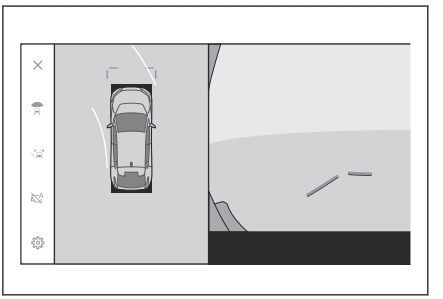

Auto display mode

Although you can display wide front view & panoramic view and side clearance view & panoramic view/cornering view by pressing the camera switch, you can also set auto display mode to display the views automatically in accordance with the vehicle speed.

- Touching the automatic display button [ ] turns on auto display mode.
- Turning on auto display mode automatically displays the views in the following situations:
  - When the shift position is in "D" or "N"
  - The vehicle decelerates to less than 6 mph (10 km/h) (the shift position is in any position other than “R”)

Cornering view auto display

You can set the cornering view auto display mode to automatically display cornering view & panoramic view in accordance with the operation of the steering wheel.

- Turning on cornering view auto display mode automatically displays cornering view in the following situations:
  - When the shift position is in "D" or "N"
  - The vehicle decelerates to less than 7 mph (12 km/h)
  - When the steering wheel is turned by 180 degrees or more from the center (straight-line) position

INFORMATION

You can change cornering view auto mode in the custom settings.

Related Links

Changing the panoramic view monitor settings(P. 278)

Intuitive parking assist linked display

Depending on the intuitive parking assist detection state, wide front view & panoramic view/Side clearance view/Cornering view & panoramic view will be displayed.

- The views are displayed automatically in the following case:
  - When the intuitive parking assist detects an obstacle (when the shift position is in “D” or “N”)
- The display returns to the previous screen automatically in the following case:
  - When the intuitive parking assist stops detecting an obstacle

INFORMATION

- You can also return to the previous screen by pressing the camera switch displayed on the screen.
- If the panoramic view monitor screen is canceled when an obstacle is detected, the panoramic view monitor screen can be displayed again by touching the intuitive parking assist mark shown on the multimedia system screen.

Using the vehicle width guide lines

■ Side clearance view & panoramic view

- Check the positional relationship between the vehicle width guide lines and an obstacle.
- Turn the steering wheel and drive forward so that the vehicle width guide lines do not overlap the actual obstacle.

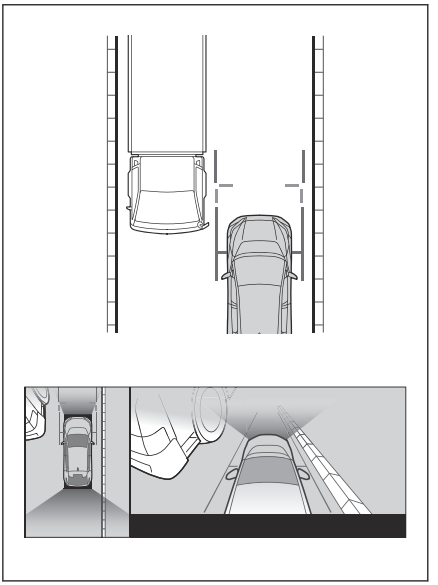

- Check the positional relationship between the vehicle width guide lines and an object such as curbs on the shoulder of a road.
- Pull the vehicle over so that the vehicle width guide lines do not overlap the obstacle as shown in the figure.
- By driving with the vehicle width guide lines parallel to the object, you can park alongside the object.

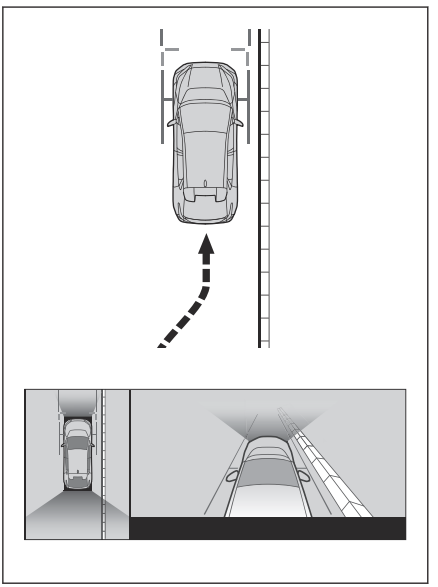

Using the forward estimated course lines

■ Cornering view & panoramic view

- Check the positional relationship between the forward estimated course lines and an obstacle.
- Turn the steering wheel and drive forward so that the forward estimated course lines do not overlap the actual obstacle.

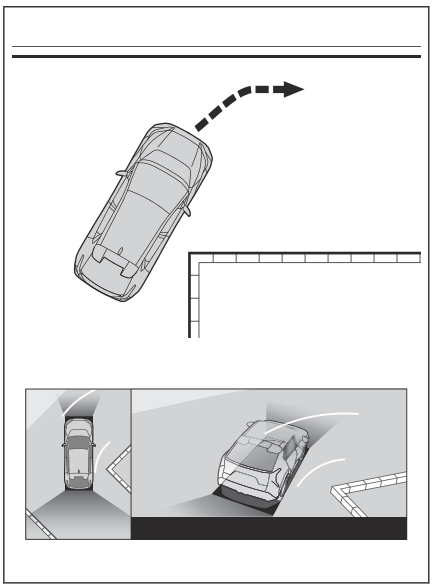

Display mode when the shift position is in "R"

To check for safety when parking the vehicle, an image is displayed from above the vehicle and from the rear camera.

1. Shift the shift position to "R".
   - The mode changes every time you touch the display mode switching button.

■ **Rear view & panoramic view**

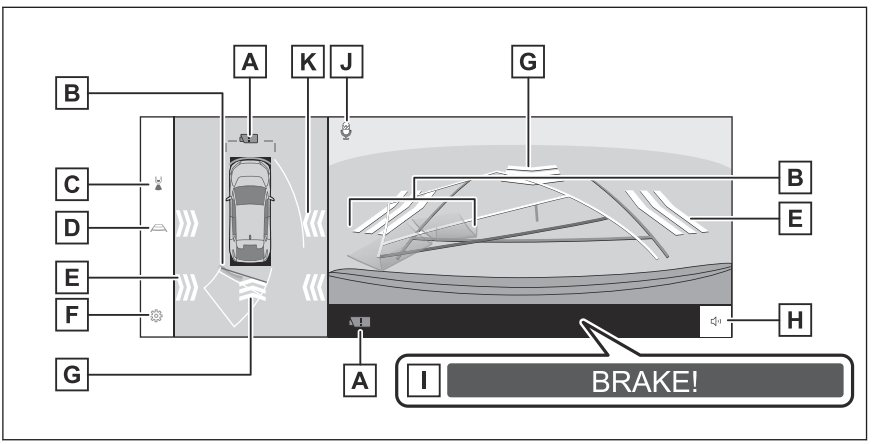

■ **Wide rear view & panoramic view**

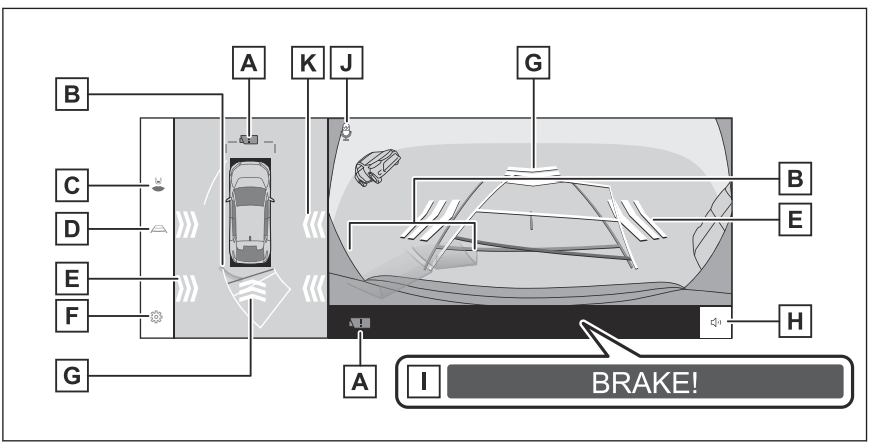

A Camera dirt detection icon

This icon is displayed when dirt is detected on the camera.

B Intuitive parking assist

Displays an indicator on the screen and sounds a buzzer when an object is detected by a sensor. (For details about the intuitive parking assist, see the vehicle "OWNER'S MANUAL".)

C Display mode switching button

Switches display mode every time touch the button.

D Guide line switching button

Switches guide line mode every time touch the button.

E RCTA (Rear Cross Traffic Alert) / RCD (Rear Camera Detection) / Moving objects alert*

An indicator is displayed on the screen in the following situations.

- When the rear radar detects an obstacle or a vehicle approaching from the rear
- If the rear camera detects a pedestrian behind the vehicle (For details about RCTA (Rear Cross Traffic Alert) / RCD (Rear Camera Detection), see the vehicle "OWNER'S MANUAL".)
- If the rear camera detects a moving object

F Customize settings button

Changes settings, such as the automatically display cornering view, the vehicle body color, the intuitive parking assist detection distance.

G RCD (Rear Camera Detection) / Moving objects alert*

If the rear camera detects a pedestrian or a moving object behind the vehicle, an indicator is displayed on the screen. (For details about RCD (Rear Camera Detection), see the vehicle "OWNER'S MANUAL".)

H Mute button

Mute the Intuitive parking assist / RCTA (Rear Cross Traffic Alert) / RCD (Rear Camera Detection) /moving objects alert sound.

I PKSB (Parking Support Brake)

If an obstacle that you may collide with is detected, a message is displayed on the screen. (For details about PKSB (Parking Support Brake), see the vehicle "OWNER'S MANUAL".)

J Voice recognition icon*1

This icon is displayed when the Intelligent Assistant is in operation.

K Moving objects alert*

If moving objects alert detects nearby vehicles and/or obstacles from the sides of the vehicle, an indicator is displayed on the screen.

* : If equipped

*1 : This function is not available in some regions.

INFORMATION

- When rear view is displayed, touch the display to change to wide rear view.
- The display position of the intuitive parking assist may not match the position of the obstacle displayed in the camera image.

⚠ WARNING

- The position of the guide lines displayed on the screen may change due to factors such as number of passengers, load weight, and road gradient. Always make sure to visually check behind you and your surroundings while you are driving.
- The intuitive parking assist, RCTA, RCD, and the object movement warning displays are overlapped and displayed on the camera image, so it may be difficult to see depending on the brightness of the surroundings and colors.

Related Links

Changing the guide line display mode(P. 266)

Changing the panoramic view monitor settings(P. 278)

Changing the guide line display mode

The guide line display mode changes every time you touch the guide line switching button.

■ Estimated course lines mode

This mode displays estimated course lines that move in accordance with the operation of the steering wheel.

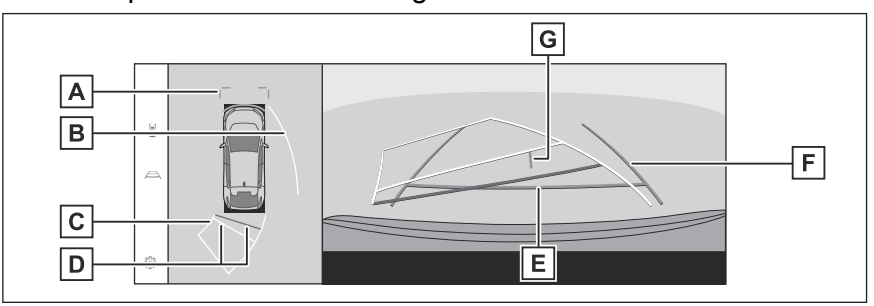

A Front distance guide lines

Displays about 3 ft. (1 m) (blue) in front of the vehicle.

B Side estimated course lines

Displays course lines (yellow) that are linked to operation of the steering wheel.

C Reverse estimated course lines

Displays course lines (yellow) that are linked to operation of the steering wheel.

D Rear distance guide lines

Displays the distance behind the vehicle.

- The distance guide line is linked to the estimated course lines.
- Displays about 1.5 ft. (0.5 m) (red) and 3 ft. (1 m) (yellow) from the center of the end of the rear bumper.

E Rear distance guide line

Displays about 1.5 ft. (0.5 m) (blue) from the end of the rear bumper.

F Vehicle width guide lines

Displays course lines when the vehicle is being reversed in a straight line.

- The lines are wider than the actual width of the vehicle.
- When the vehicle is straight, the guide lines will overlap with the estimated course lines.

G Vehicle center guide line

Displays the center of the vehicle width guide lines.

■ Parking assist guide lines mode

This mode displays the steering wheel return points (parking assist guide lines). This mode is recommended for those who have a sense of the vehicle and can park the vehicle without the aid of the estimated course lines.

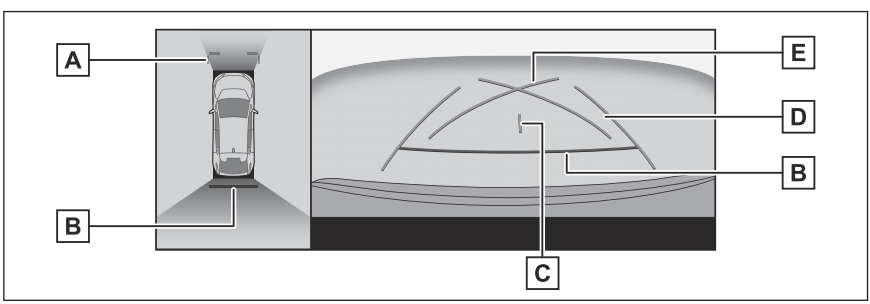

A Front distance guide lines

Displays about 3 ft. (1 m) (blue) in front of the vehicle.

B Rear distance guide lines

Displays the distance behind the vehicle.

● Displays about 1.5 ft. (0.5 m) (red) from the center of the end of the rear bumper.

C Vehicle center guide line

Displays the center of the vehicle width guide lines.

D Vehicle width guide lines

Displays course lines when the vehicle is being reversed in a straight line.

● The lines are wider than the actual width of the vehicle.

E Parking assist guide lines

Displays the course lines of the smallest turn possible behind the vehicle.

● Use the position of operating the steering wheel when parking as a guide.

■ Distance guide lines mode

This mode only displays the distance guide lines. It is recommended for those who do not need the guide lines.

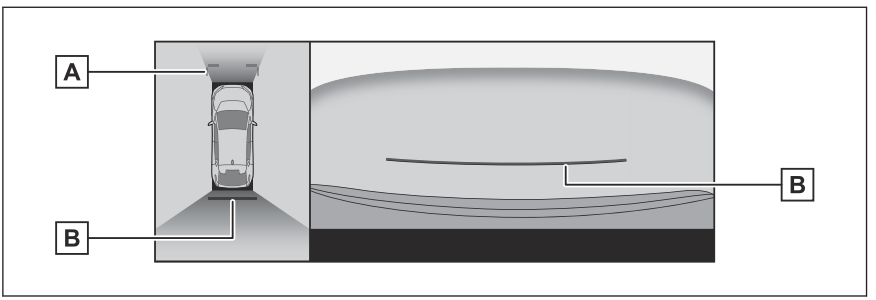

A Front distance guide lines

Displays about 3 ft. (1 m) (blue) in front of the vehicle.

B Rear distance guide lines

Displays the distance behind the vehicle.

● Displays about 1.5 ft. (0.5 m) (red) from the center of the end of the rear bumper.

■ Estimated course center line mode

This mode displays estimated course lines and a vehicle center guide line that move in accordance with the operation of the steering wheel.

Use this mode when approaching a signpost or pole with the center of the rear bumper.

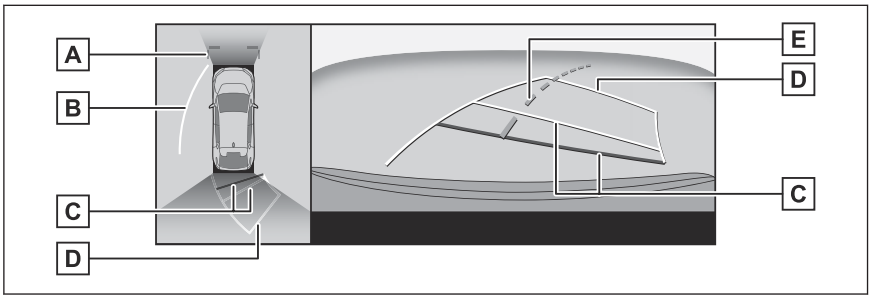

A Front distance guide lines

Displays about 3 ft. (1 m) (blue) in front of the vehicle.

B Side estimated course lines

Displays course lines (yellow) that are linked to operation of the steering wheel.

C Rear distance guide lines

Displays the distance behind the vehicle.

- The distance guide line is linked to the estimated course lines.
- Displays about 1.5 ft. (0.5 m) (red) and 3 ft. (1 m) (yellow) from the center of the end of the rear bumper.

D Reverse estimated course lines

Displays course lines (yellow) that are linked to operation of the steering wheel.

E Estimated course center line

Displays the vehicle center guide line (green) that is linked to operation of the steering wheel.

INFORMATION

The guide lines will not be displayed if the back door is not closed. If the back door is closed but the guide lines are still not displayed, have the vehicle inspected by your Toyota dealer.

⚠ WARNING

The rear vehicle width guide lines are wider than the actual width of the vehicle. Always make sure to visually check behind you and your surroundings when you are reversing.

Parking using the estimated course lines mode

1 Shift the shift position to "R".

2 **Turn the steering wheel so that the estimated course lines are within the parking space and then reverse slowly.**

A Parking space

B Estimated course lines

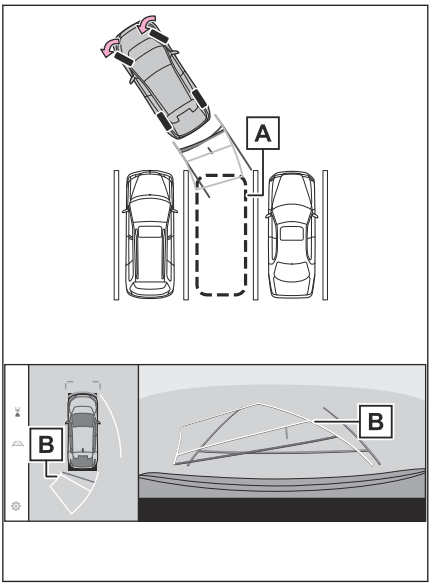

3 **When the rear of the vehicle has entered the parking space, turn the steering wheel so that the vehicle width guide lines are within the left and right dividing lines of the parking space.**

A Vehicle width guide lines

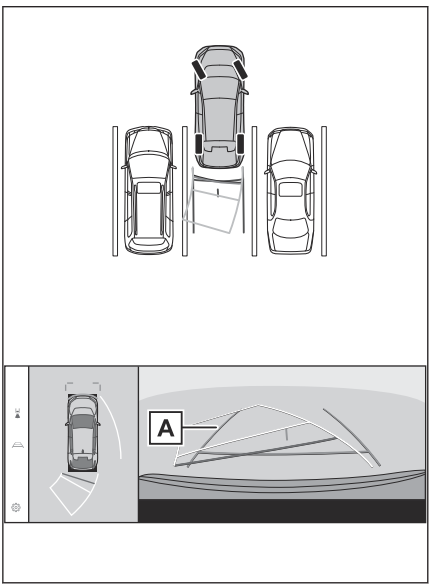

4 **Once the vehicle width guide lines and the parking space lines are parallel, straighten the steering wheel and reverse slowly until the vehicle has completely entered the parking space.**

5 **Stop the vehicle in an appropriate place to finish parking.**

Parking using the parking assist guide lines mode

1 **Shift the shift position to "R".**

2 **Reverse until the parking assist guide lines align with the dividing line of the parking space.**

A Parking assist guide lines
B Parking space dividing line

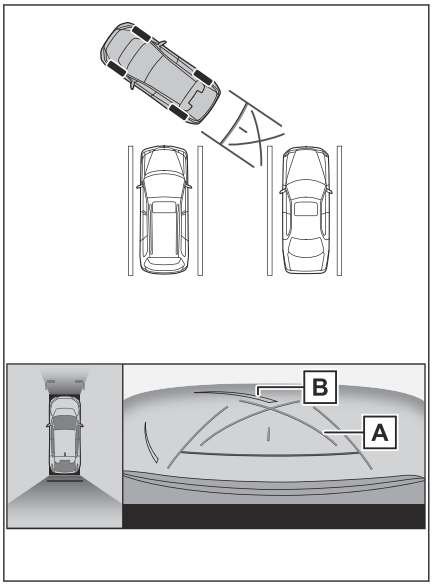

3 **Turn the steering wheel all the way, and reverse slowly.**

4 **Once the vehicle is parallel with the parking space, straighten the steering wheel and reverse slowly until the vehicle has completely entered the parking space.**

5 **Stop the vehicle in an appropriate place to finish parking.**

The screen when the outside rear view mirrors are folded

When the outside rear view mirrors are folded, an image from the side cameras rather than panoramic view will be displayed. This can assist you in confirming that the vicinity of the vehicle is safe when you are parking in a narrow place.

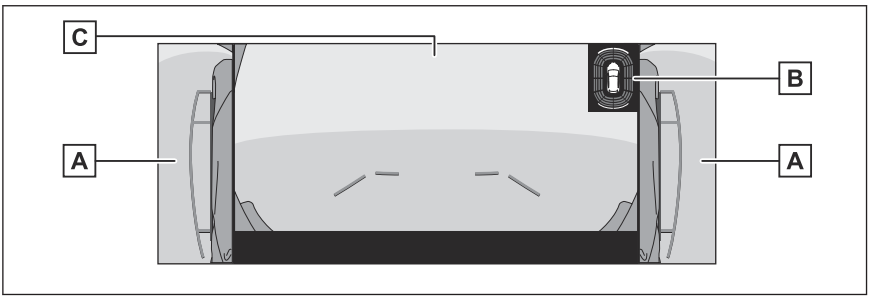

A Side views

B Intuitive parking assist

Displays an indicator on the screen and sounds a buzzer when an object is detected by a sensor. (For details about the intuitive parking assist, see the vehicle "OWNER'S MANUAL".)

C Wide front view/Rear view/Wide rear view

INFORMATION

The display position of the intuitive parking assist may not match the position of the obstacle displayed in the camera image.

Zooming in on the screen

Zooming in on the screen can be done if the image on the screen is too small and hard to see.

Touch the area that you want to zoom in on the panoramic view or wide front view.

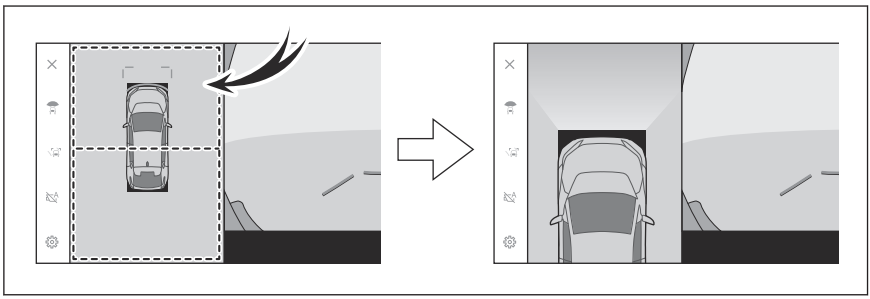

- The selected area is zoomed in on.
- In panoramic view, you can zoom in one of the two places in front or rear of the vehicle.
- To cancel the zoom, touch the screen again.

INFORMATION

- The zoom feature is enabled when all of the following conditions are met:
  - The vehicle speed is below 7 mph (12 km/h)
  - The intuitive parking assist is turned on
- In any of the following situations, the zoom feature will be canceled automatically:
  - The vehicle speed is above 7 mph (12 km/h)
  - The intuitive parking assist is turned off
- The guide lines will not be displayed when the panoramic view is zoomed.

Displaying transparent underfloor vision

A composite of camera vision captured in the past from the current vehicle position to assist understanding of the situation under the vehicle, tire positions, and so on can be displayed. The vision is displayed in panoramic view, side clearance view, or cornering view.

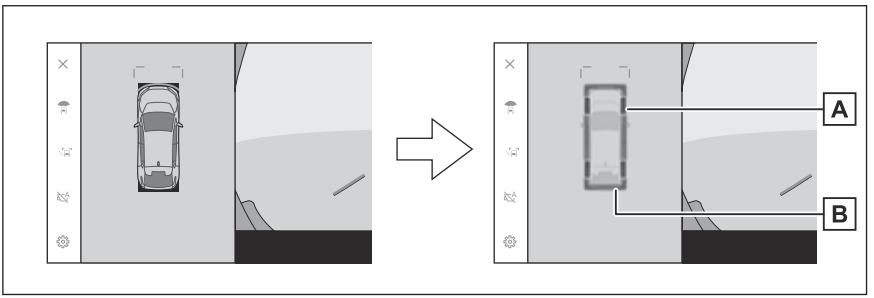

A Tire tracks

Displays the tire position guides linked to the steering wheel.

B Vehicle guide lines

Displays the exterior of the vehicle.

INFORMATION

- Transparent underfloor vision is displayed when the setting on the customized setting screen is turned on and the vehicle is moving forward or backward.
- Transparent underfloor vision is not displayed in the following cases:
  - The vehicle speed is above 12 mph (20 km/h)
  - The vehicle stops and a certain amount of time passes
  - If the vehicle does not move a certain distance after it is started
  - The side mirrors are folded
  - ABS is operating
  - The system is not functioning correctly
- The system may not function correctly in the following situations:
  - Snow covered roads
  - There are shadows from lights and so forth
  - There is dirt or a foreign object on the camera lens
  - Water (river, sea, etc.)
  - Optional equipment has been installed

- There is an obstacle in front of the camera
- The tires were replaced
- The back door is open and the camera is not in the correct position
- The road surface is slippery or the wheels slip
- The vehicle is on a hill or other steep roads

● As vision that was captured in the past is being displayed, the screen and the actual situation may differ in the following cases:

- An obstacle appears or moves after vision is captured
- Sand or snow crumbles and moves after vision is captured
- Mud or puddles are in the display range
- When the vehicle slips

● Part or all of the transparent underfloor vision may appear black in the following cases:

- The vehicle starts moving with no captured vision
- If the vehicle does not move a certain distance after it is started
- The steering wheel is turned more than a certain angle
- The vehicle stops and a certain amount of time passes
- The outside rear view mirrors are folded
- ABS is operating
- The system is not functioning correctly

⚠ WARNING

● The tire and vehicle guide lines may not align correctly with the actual vehicle position due to the number of passengers, vehicle load, road gradient, road surface conditions, brightness of the surroundings, optional equipment, tire replacements, and other reasons. Always make sure to check your surroundings while you are driving.

● Displayed vision is vision that was captured in the past. Therefore, if obstacles and other objects move after being captured, the transparent underfloor vision and the actual situation may not always match.

Related Links

Changing the panoramic view monitor settings(P. 278)

Moving object alert*

If a moving object is detected around the vehicle when the panoramic view is displayed, an alarm will sound and an indicator will be displayed on the screen.

The moving object alert is operational when all of the following are met:

- When the "D" or "R" shift position is selected
- When the vehicle speed is approximately 9 mph (15 km/h) or less
- When the outside rear view mirrors are extended

INFORMATION

- In situations such as the following, the camera sensors may not detect a moving object correctly:
  - When the object is a running person
  - When a person suddenly appears from behind the vehicle or a building
  - When the object is a person riding on a skateboard or light road vehicle
  - When the object is a person clothed in similar color as the surroundings
  - When part of person's body is hidden behind an object, such as a cart or luggage
  - When it is dark after the sunset
  - When in inclement weather, such as rain, snow, fog, etc.
  - When a camera lens is dirty with mud, snow melting agent, etc. or damaged
  - When water droplets are attached on a camera lens
  - When a very bright light shines directly into a camera sensor
  - When there is a difference in brightness/darkness, such as near an open shutter of a garage or underground parking space
- When an object, such as the following, is detected, the system may operate even though there is no possibility of a collision:
  - Moving objects/substance, such as a flag, emission gas, large rain drops, snow, rainwater on the road, etc.

* : If equipped

- Patterns formed on a road, such as white lines, pedestrian crossings, stone pavement, tram rails, road repair traces, fallen leaves, gravels, puddles, etc.
- Metal covering (gratings) or a road gutter
- A road shoulder or ramp
- Reflections of an object on a puddle or wet road surface
- Shadows
- Objects having height/slender length, such as columns, traffic corns, fire hydrants, etc.
- Pedestrians, bicycles, or vehicles that are standing still

● In situations such as the following, the system may operate even though there is no possibility of a collision:

- When the vehicle rides on a ramp
- When there is a change in gradient
- When the vehicle is tilted at a steep angle, due to carrying load or sudden braking
- When the suspension has been modified or tires other than specified are installed
- When the vehicle height has been excessively changed (nose-up, nose-down)
- When a non-genuine electric part, such as a fog light, is installed near the camera sensors
- When a non-genuine bumper protector, such as a bumper trim, is installed
- When an arm is held outside of a window
- When the camera sensors are displaced in position or direction
- When a towing hook is installed
- When a camera lens is dirty with mud, snow melting agent, etc.
- When water droplets are attached on a camera lens
- When there is a flashing light source, such as the emergency flashers

Changing the panoramic view monitor settings

Settings related to panoramic view monitor such as the cornering view auto display and vehicle body color can be changed.

1 **Touch [ ].**

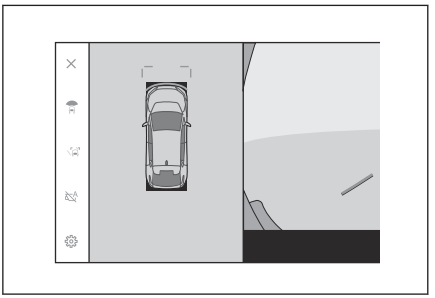

2 **Select the desired item.**



● [**Cornering View**]

Enable or disable the automatic display of the cornering view.

● [**View Under Vehicle**]

Turn the transparent underfloor vision display setting on or off. Setting it to on and moving the vehicle forward or backwards displays a composite of camera vision captured in the past from the current vehicle position to assist understanding of the situation under the vehicle, front tire positions, and so on. The vision is displayed in panoramic view, side clearance view, or cornering view.

● [**TOYOTA Park Assist 3D Display**]

Show or hide the intuitive parking assist 3D display.

● [**TOYOTA Park Assist Distance**]

Change the distance that the intuitive parking assist starts detecting obstacles.

● [**Vehicle Body Color**]

Change the vehicle body color displayed on the screen.

● [**Moving object alert**]*

Set the moving object alert display on/off.

● [**Warnings when auto display mode enabled**]*

* : If equipped

Set the moving object alert display on/off when the automatic display mode is ON.

INFORMATION

For safety purposes, you cannot display the custom settings screen while the vehicle is moving.

Related Links

Changing the body color(P. 279)

Changing the intuitive parking assist detection distance(P. 279)

Changing the body color

Change the vehicle body color displayed on the screen.

1 **Touch [Vehicle Body Color].**

2 **Select the desired body color.**

3 **Touch [OK].**

Changing the intuitive parking assist detection distance

Change the distance that the intuitive parking assist starts detecting obstacles.

1 **Touch [TOYOTA Park Assist Distance].**

2 **Select the distance at which you want to start detecting objects.**



Precautions for the panoramic view monitor

Always make sure to visually check behind you and your surroundings while driving. If not, collision with other vehicles or an unforeseen accident may occur. Follow the below precautions when using the panoramic view monitor.

⚠ WARNING

- Never depend on the panoramic view monitor entirely. Always make sure to visually check behind you and your surroundings as you would when driving any other vehicle. In particular, be careful not to collide with vehicles parked nearby or other objects.
- Always make sure to visually check behind you and your surroundings while you are driving.
- Never drive while looking only at the screen. The image on the screen may be different to the actual conditions. Moreover, there is a limit to the range of image that the camera can capture. Never turn or reverse only looking at the screen. Doing so may result in a collision with another vehicle or some other unforeseen accident. Be sure to visually check the vehicle's surroundings and use the vehicle's rear-view and side mirrors.
- The position of the guide lines displayed on the screen may change due to factors such as number of passengers, load weight, and road gradient. Always make sure to visually check behind you and your surroundings while you are driving.
- Do not use the panoramic view monitor in the following cases:
  - On icy or slick road surfaces, or in snow
  - When using tire chains or emergency tires
  - When the front door(s) or back door are not closed completely
  - On roads that are not flat, such as hills
  - If the tires of a size other than specified by Toyota are installed
  - If the suspension has been modified
  - If a non-Toyota product is installed on the area displayed on the screen
- In low external temperatures, the screen may darken or the image may become faint. The image could distort when the vehicle is moving, or you may not be able to see the image on the screen, so always visually check your surroundings while you are driving.

⚠ WARNING

- If you replace your tires, the position of the guide lines displayed on the screen may be incorrect.

⚠ NOTICE

- See-through view, moving view, panoramic view, side clearance view, and cornering view produce an image that is a composite of images captured by the front camera, rear camera, and side cameras. As there is a limit to the displayable range and content, make sure you fully understand the features of the panoramic view monitor before you use it.
- The four corners of the see-through view, moving view, panoramic view, side clearance view, and cornering view have a video composition processing region centered on borders of the cameras, and image clarity may decline. However this is not a fault.
- Depending on lighting conditions near each camera, bright and dark patches may appear on the see-through view, moving view, panoramic view, side clearance view, and cornering view.
- See-through view, moving view, panoramic view, side clearance view, and cornering view does not extend higher than the installation position and image capture range of each camera.
- There are blind spots around the vehicle and as such there are regions not displayed on the panoramic view monitor.
- Three-dimensional objects displayed in wide front view, rear view, wide rear view or side view may not be displayed in see-through view, moving view, panoramic view, side clearance view, and cornering view.
- People and other three-dimensional obstacles may appear differently when displayed on the panoramic view monitor. (These differences include cases in which displayed objects appear to have fallen over, disappear near image processing regions, appear from video composition processing areas, or when the actual distance to an object differs from the displayed position.)
- When the back door, which is equipped with the rear camera, or front doors, which are equipped with side mirrors that have the built-in side cameras, are open, images will not be displayed properly on the panoramic view monitor.
- The vehicle icon displayed in see-through view, moving view, panoramic view, side clearance view, and cornering view is a computer generated image, so the color, shape and size will differ from the actual

⚠ NOTICE

vehicle. Therefore, nearby three-dimensional objects may appear to be touching the vehicle, and actual distances to three-dimensional objects may differ from those displayed.

- The camera may not function correctly and the image may be displayed on the screen in the following manner:
  - When the shift position is in "R", part or all of the screen may appear black
  - When the shift position is in "R", the screen may not change to the camera image
  - When a shift position other than "R" is selected, the image from the camera may remain displayed
  - The guide lines are not displayed on the camera image, and attention symbols and caution notices are displayed

Area displayed on the screen

There are blind spots around the vehicle and as such there are regions not displayed on the screen. Even if nothing around the vehicle is displayed on the screen, there may actually be obstacles on the road, which you may collide with. Always make sure to visually check your surroundings.

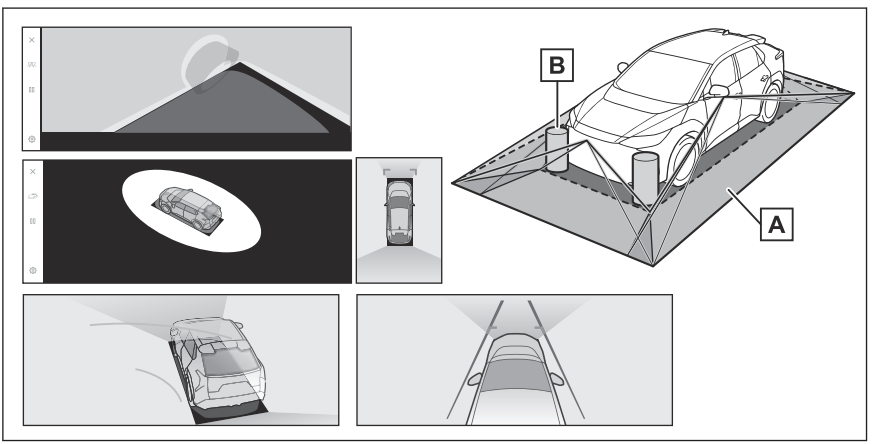

A Area displayed on the screen

B Objects not displayed on the screen

Objects in the black areas do not appear on the screen.

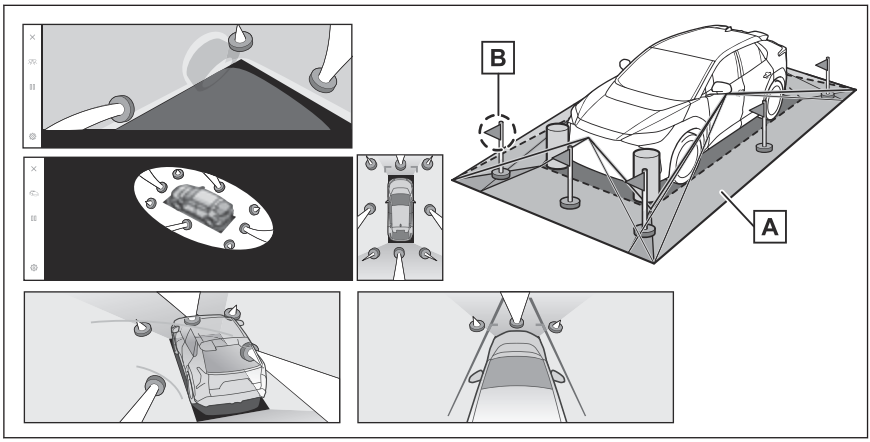

A Area displayed on the screen

B Parts of objects not displayed on the screen

Parts higher than the road do not appear on the screen.

INFORMATION

- The black parts around the vehicle icon are not displayed by the camera. Visually check those areas.
- As the images are obtained from four cameras are processed and displayed on the standard of a flat road surface, see-through view, moving view, panoramic view (including zoomed display), side clearance view, and cornering view may be displayed as follows:
  - Objects may look collapsed; thinner or bigger than usual.
  - An object with a higher position than the road surface may look further away than it actually is or may not appear at all.
  - Tall objects may appear protruding from the non-displayed areas of the image.
- Variations in the brightness of the image may appear for every camera due to lighting conditions.
- The displayed image may be misaligned due to inclination of the vehicle body or change in vehicle height caused by the number of passengers, and vehicle load.
- If the doors are not completely closed, the image and the guide lines may not be displayed correctly.
- The positional relationship of the road surface and objects with the vehicle icon displayed on see-through view, moving view, panoramic

view (including zoomed display), side clearance view, and cornering view may differ to the actual positions.

- Light from a back-lit license plate may appear on the screen.
- Images indicated by [○] in the figure are a composite, and hence some areas may be difficult to see.

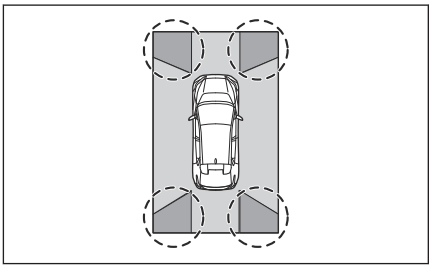

■ Wide front view

A Area displayed on the screen

B Objects not displayed on the screen

Areas close to both corners of the bumpers will not appear on the screen.

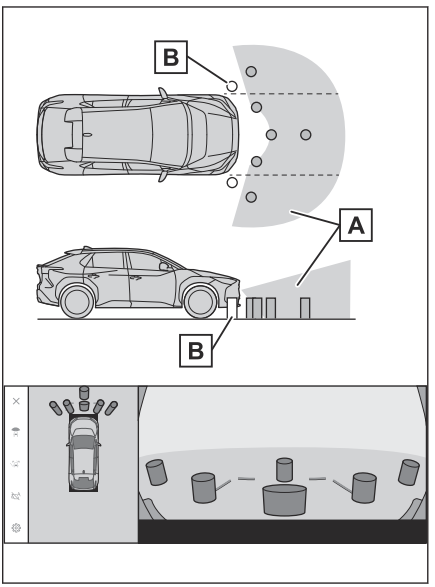

INFORMATION

- The area covered by the camera is limited. Objects that are close to either corner of the bumper or under the bumper cannot be displayed on the screen.
- The depth perception of the image displayed on the screen differs to the actual distance.
- The wide front view camera uses a special lens, so the depth perception of the image displayed on the screen differs to the actual distance.

■ Side view & Rear view (when the side mirrors are folded)

A Area displayed on the screen

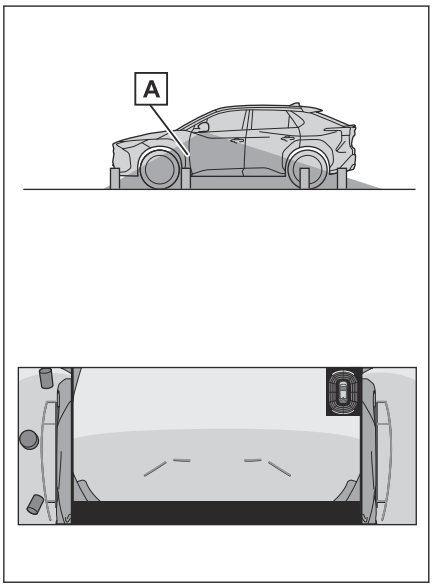

INFORMATION

- The range that is displayed on the screen may differ due to the state of the vehicle and road surface.
- The area covered by the camera is limited. Objects that are close to the bumper on the passenger's side or under the bumper cannot be displayed on the screen.
- The depth perception of the image displayed on the screen differs to the actual distance.
- The cameras on side view & rear view use a special lens, so the depth perception of the image displayed on the screen differs to the actual distance.

■ Rear view

A Area displayed on the screen

B Objects not displayed on the screen

Areas close to both corners of the bumpers will not appear on the screen.

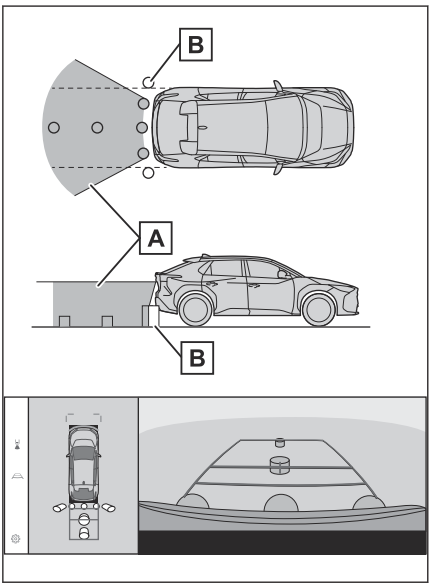

■ Wide rear view

A Area displayed on the screen

B Objects not displayed on the screen

Areas close to both corners of the bumpers will not appear on the screen.

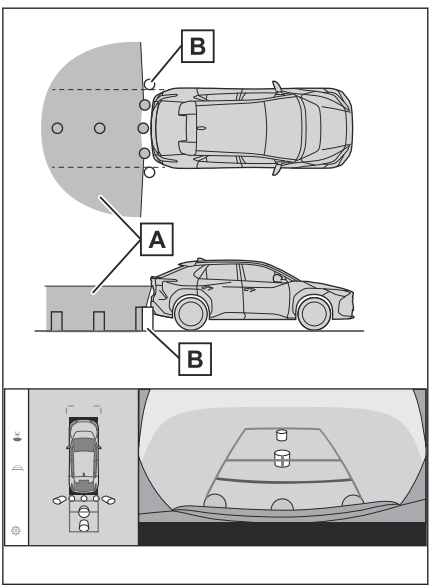

INFORMATION

- The range that is displayed on the screen may differ due to the state of the vehicle and road surface.

- The area covered by the camera is limited. Objects that are close to either corner of the bumper or under the bumper cannot be displayed on the screen.
- The depth perception of the image displayed on the screen differs to the actual distance.
- The rear view and wide rear view cameras use a special lens, so the depth perception of the image displayed on the screen differs to the actual distance.
- Objects that are higher than the rear camera may not appear in the monitor.
- Light from a back-lit license plate may appear on the screen.

Camera position

The panoramic view monitor cameras are in the locations shown in the figures.

■ Front camera

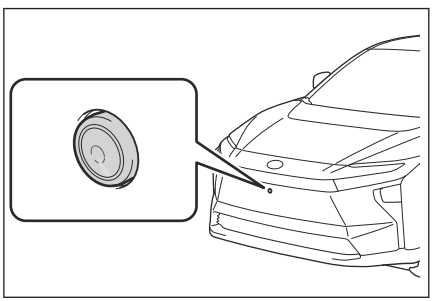

■ Side cameras

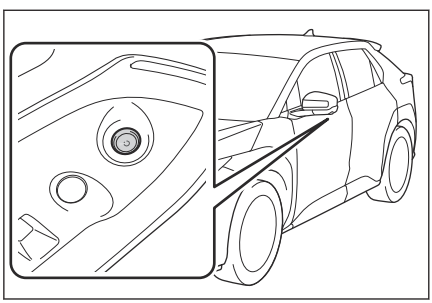

■ Rear camera

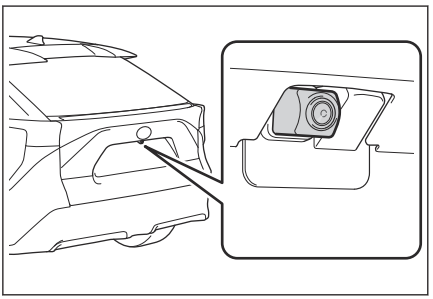

Cleaning the camera

If dirt or foreign matter, such as water droplets, snow, or mud, has stuck to the camera, you will not be able to see the image clearly. If that happens, splash the camera with a large amount of water and then wipe the camera lens clean with a soft, damp cloth.

⚠ NOTICE

- The panoramic view monitor may stop functioning correctly. Take note of the following items:
  - Do not hit or apply a forceful impact on the camera. Doing so may change the position and mounting angle of the camera.
  - The camera is designed to be waterproof. Do not detach, disassemble, or modify it.
  - When washing the camera lens, splash the camera with a large amount of water and then wipe the camera lens clean with a soft, damp cloth. Rubbing the camera lens forcibly may scratch the camera lens and you may no longer be able to see images clearly.
  - The camera cover is made of resin. Do not allow an organic solvent, car wax, window cleaner, or glass coating to adhere to the camera. If this happens, wipe it off immediately.
  - Do not pour hot water on the vehicle in cold weather or apply other rapid changes of temperature.
  - If you wash the vehicle with a high pressure car washer, do not point the hose directly at the camera or camera area. Applying strong water pressure may result in the camera malfunctioning.
- If the camera is hit, it may cause a camera malfunction. If this happens, have the vehicle inspected by your Toyota dealer as soon as possible.

Parking assist lights

The parking assist lights of the panoramic view monitor system are installed in the locations shown in the figure.

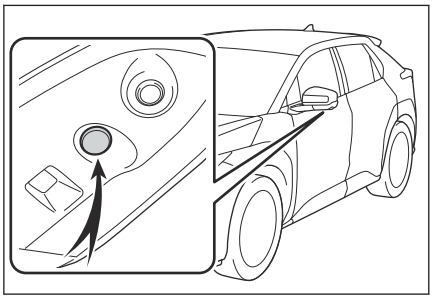

⚠ NOTICE

- Make sure to observe the following precautions, otherwise the panoramic view monitor system may not operate correctly:
  - Do not apply excessive force to a light or subject it to a strong impact. Doing so may cause the position or installation angle of the light to deviate.
  - Do not remove, disassemble, or modify the lights as they have a waterproof construction.
  - When cleaning the lights, wash them with a large amount of water, and then wipe them with a soft wet cloth.
  - Do not apply organic solvents, waxes, oil removing solvents, glass coatings, etc. to the covers of the lights, as they are made of resin. If such is applied, remove it immediately.
  - Do not expose the lights to sudden temperature changes, such as applying hot water to them when it is cold.
  - When washing the vehicle with a high-pressure washer, do not spray water directly on the lights or their surrounding area. High-pressure water can damage the lights and cause them to not operate correctly.
- If a light has been subjected to a strong impact, it may be damaged. Have the vehicle inspected by your Toyota dealer as soon as possible.

Differences between the screen and the actual road

The composite images on the panoramic view monitor and guide lines give a distance guide for flat road surfaces. Therefore, there is a margin of error between the guide lines on the screen and the actual distance and course on the road.

■ When the ground behind the vehicle slopes up sharply

The distance guide lines will appear to be closer to the vehicle than the actual distance. Thus, objects on up-slopes will appear to be farther away than they actually are. In the same way, there will be a margin of error between the guidelines and the actual distance and course on the road.

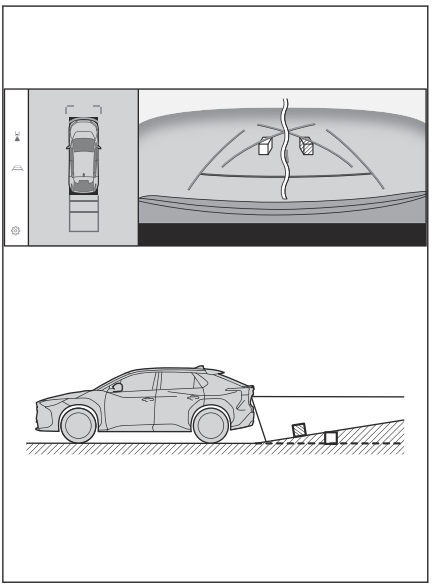

■ When the ground behind the vehicle slopes down sharply

The distance guide lines will appear to be further from the vehicle than the actual distance. Thus, objects on down-slopes will appear to be closer than they actually are. In the same way, there will be a margin of error between the guidelines and the actual distance and course on the road.

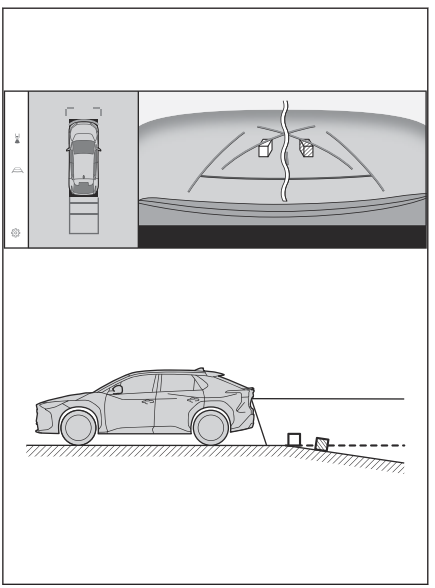

When any part of the vehicle sags

When any part of the vehicle sags due to the number of passengers or the distribution of the load, there is a margin of error between the guide lines on the screen and the actual distance and course on the road.

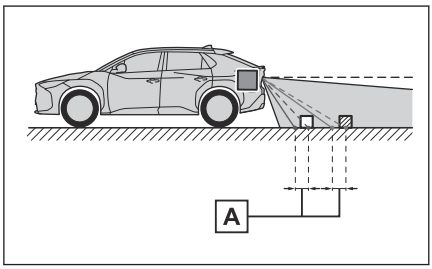

A Margin of error

Estimated course center line

As the guide lines are shown mid-air near the rear bumper, there are times that they may look like they are off-center.

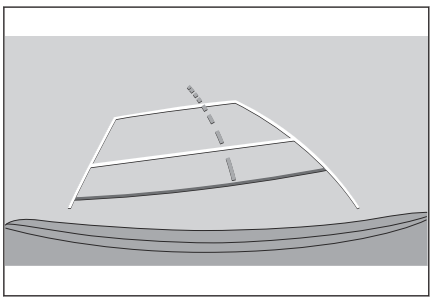

Differences between the screen and actual 3D objects

Since the guide lines and displayed on the screen are displayed for a flat road surface, it is not possible to determine the position of three-dimensional objects. When approaching a three-dimensional object that extends outward (such as the flatbed of a truck), take note of the following cautions.

⚠ WARNING

When the intuitive parking assist display is red, make sure to visually check before moving the vehicle any further. There is the danger that you may collide with another vehicle or have some other unforeseen accident.

Displaying panoramic view (including zoom display)

On the screen, it appears that there is a gap between the vehicle's bumper and another object or vehicle, and it does not look as if the vehicle will collide with the object or vehicle. However, the vehicle is over the course lines, so the vehicle may collide with the object or vehicle. Make sure to visually check your surroundings.

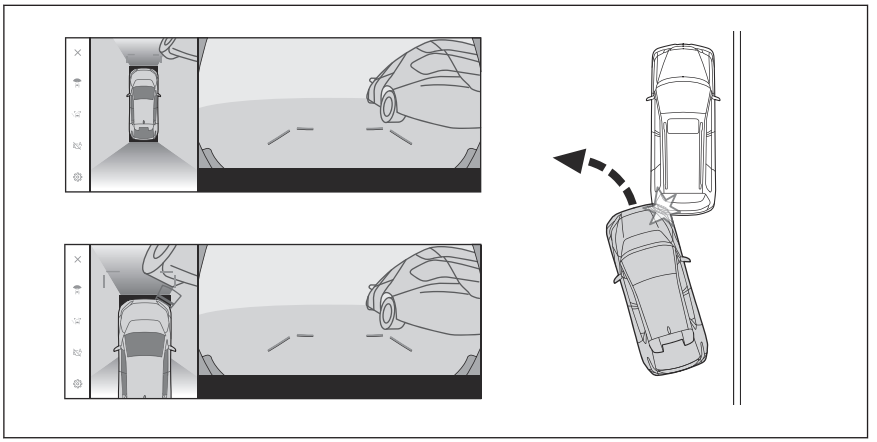

Estimated course lines

- On the screen, it appears that the vehicle's bumper is outside of the estimated course lines, and it does not look as if the vehicle will collide with the object or vehicle. However, the vehicle is over the course lines, so the vehicle may collide with the object or vehicle. Make sure to visually check your surroundings.

A Estimated course lines

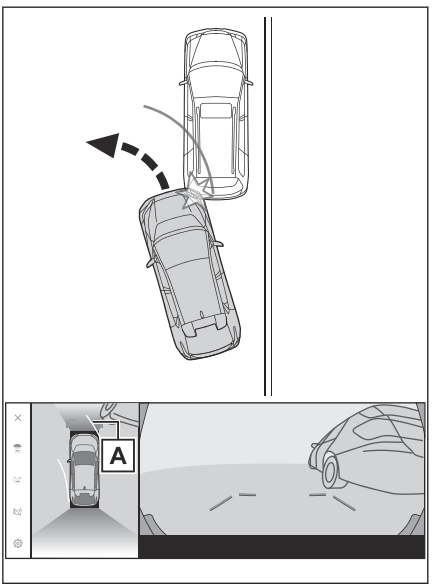

● Three-dimensional objects in high positions (such as the overhang of a wall or loading platform of a truck) may not appear on the screen. Make sure to visually check your surroundings.

A Overhang of a wall

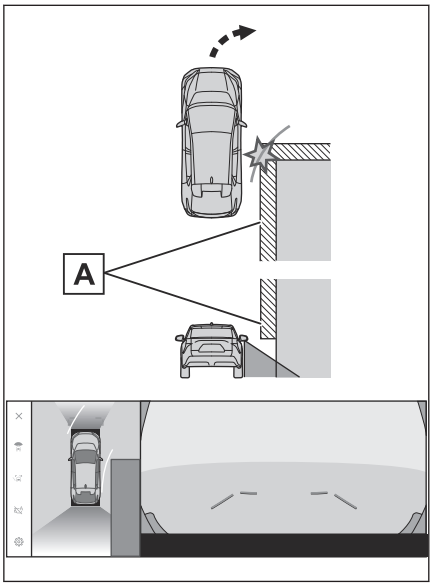

● On the screen, a truck flatbed may appear to be outside of the estimated course lines and the vehicle does not look as if it will collide with the truck. However, the flatbed may actually cross over the estimated course lines and if you reverse as guided by the estimated course lines, the vehicle may hit the truck. Make sure to visually check your surroundings.

A Estimated course lines

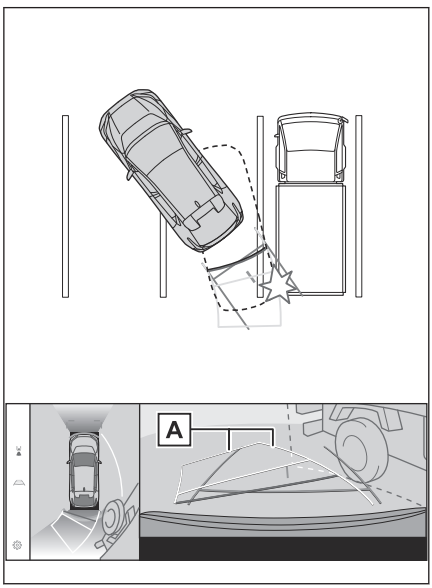

■ Distance guide lines

On the screen, the distance guide lines shows that a truck is parking at point B. However, in reality if you reverse to point A, you will collide with the truck. On the screen, it appears that point A is closest followed by points B and C. However, in reality, the distance to points A and C is the same, and point B is farther than A and C. Make sure to visually check behind you and your surroundings. The distance to point D is about 3 ft. (1 m).

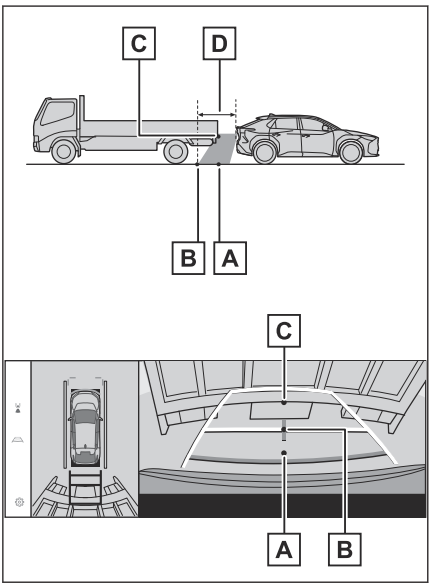

■ Overhang of a diagonal beam

In panoramic view, a diagonal beam may appear straight and seems likely not to be struck, however, since the top part of the is actually overhanging, the vehicle may hit it. Make sure to visually check the rear and surroundings.

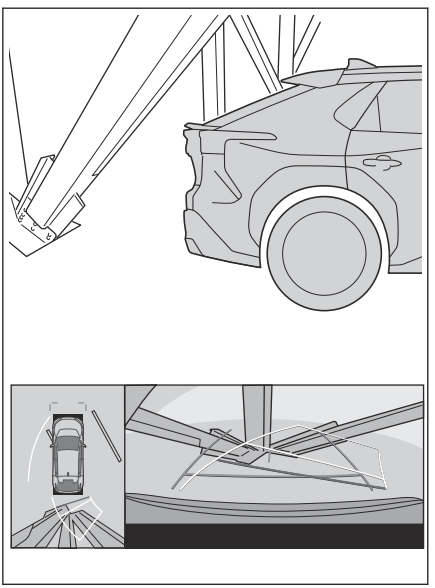

■ Magnifying function

Unlike the normal panoramic view, the panoramic view magnifying function zooms in on the vehicle icon. Therefore, white lines on the road, walls, and other objects may look bent.

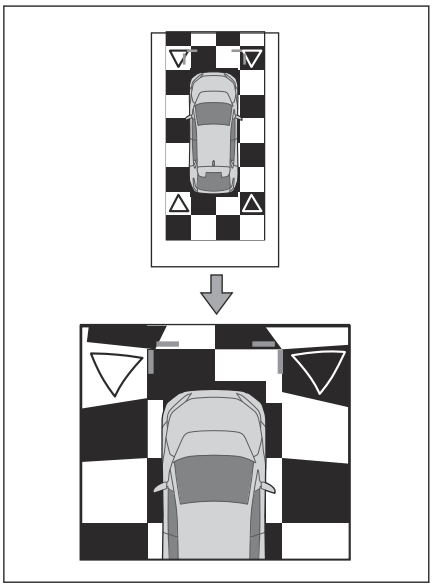

If you notice any symptoms

If you notice or are troubled by any of the symptoms below, check the issue again referring to the likely cause and solution.

If the symptom is not resolved by the solution, have the vehicle inspected by your Toyota dealer.

Symptom	Symptom	Solution
The screen is difficult to see	● The vehicle is in a dark area or it is night. ● The temperature around the lens is either high or low. ● The outside temperature is low. ● There are water droplets on the camera. ● It is raining or humid. ● Foreign matter (mud etc.) is stuck to the camera. ● Sunlight or headlights are shining directly into the camera. ● The vehicle is under fluorescent lights, sodium lights, mercury lights, etc.	Visually check the vehicle's surroundings while you are driving. Use the panoramic view monitor again once the camera and conditions have improved. The procedure for adjusting the picture quality of the panoramic view monitor is the same as the procedure for adjusting the multimedia screen.
The image is blurry	Dirt or foreign matter, such as water droplets, snow, or mud, has stuck to the camera lens.	Splash the camera with a large amount of water and then wipe the camera lens clean with a soft, damp cloth.
The screen is misaligned	The camera has received a strong impact.	Have the vehicle inspected by your Toyota dealer.
The guide lines are significantly misaligned	The camera position is misaligned.	Have the vehicle inspected by your Toyota dealer.
	● The vehicle is tilted (There is a heavy load on the vehicle, tire pressure is low due to a tire puncture, etc.). ● The vehicle is on an incline.	Visually check the vehicle's surroundings while you are driving.

Symptom	Symptom	Solution
The estimated course lines move even though the steering wheel is straight (the vehicle width guide lines and estimated course lines are out of alignment).	There is a malfunction in the signals being output by the steering sensor.	Have the vehicle inspected by your Toyota dealer.
The guide lines are not displayed	The back door is open.	Close the back door. If this does not resolve the issue, have the vehicle inspected by your Toyota dealer.
The panoramic view display cannot be enlarged. The see-through view/moving view, side clearance view, and cornering view cannot be displayed.	The intuitive parking assist may be malfunctioning or dirty.	Follow the correction procedures for malfunctions of the intuitive parking assist. (For details about the intuitive parking assist, see the vehicle "OWNER'S MANUAL".)

Related Links

Changing the screen display settings(P. 64)

Information about free/open source software

This product contains free/open source software.

You can get information about free/open source software and/or source codes from the following URL:

https://www.denso.com/global/en/opensource/svss/toyota

9 Appendix

9-1. Appendix

Information about media and data 300

HD Radio™/SiriusXM® Satellite Radio..... 311

Certification..... 315

Information about media and data

Information about media that can be used

The specifications of the media and other devices that can be used are as follows.

■ Formats and specifications of USB flash drives

The formats and standards of the USB flash drives that can be used, and the restrictions for use, are as follows.

USB communication format	USB2.0 HS (480MBPS)
File format	FAT 16/32
Communication class	Mass storage class
Maximum number of folders	3000 (including root)
Maximum number of folder levels	8
Maximum number of files	9999 (maximum of 255 files per folder)
Memory capacity	Up to 32 GB
Maximum size of one file	2GB

- Files other than the formats above may not be played correctly, or information such as the file or folder name may not display correctly.
- Please understand in advance that this device may not be able to play your USB flash drive.
- Depending on the computer used to save files on a USB flash drive, hidden files may be saved in addition to the playback files. Deletion of such hidden files is recommended. They may have a negative effect during playback and prevent files from being switched correctly.

Format information

The specifications of the music data that can be used are as follows.

■ MP3

Supported standard	MP3 (MPEG1 LAYER 3, MPEG2 LSF LAYER 3)

Supported sampling frequency (kHz)	MPEG1 LAYER 3:32, 44.1, 48 MPEG2 LSF LAYER 3:16, 22.05, 24
Supported bit rate (kbps)(1)	MPEG1 LAYER 3: 32 to 320 MPEG2 LSF LAYER 3: 8 to 160
Supported channel mode	Stereo, joint stereo, dual channel, monaural
ID3 tag	ID3 Ver. 1.0, 1.1, 2.2, 2.3 (number of characters as specified by each version)

(1) VBR (Variable Bit Rate) is supported.

■ WMA

Supported standard	WMA Ver. 7, 8, 9 (9.1, 9.2)
Supported sampling frequency (kHz)	32, 44.1, 48
Supported bit rate (kbps)(1)(2)	Ver. 7, 8:CBR (Constant Bit Rate) 48 to 192 Ver. 9 (9.1/9.2): CBR 48 to 320

(1) VBR (Variable Bit Rate) is supported.

(2) Multi-channel audio sources are converted to 2ch.

■ AAC

Supported standard(1)	MPEG4 AAC-LC
Supported sampling frequency (kHz)	11.025, 12, 16, 22.05, 24, 32, 44.1, 48
Supported bit rate (kbps)(2)	8 to 320
Supported channel mode(3)	1ch (1/0), 2ch (2/0)

(1) ADIF is not supported.

(2) VBR (Variable Bit Rate) is supported.

(3) Dual channel is not supported.

■ WAV (LPCM)

Supported sampling frequency (kHz)(1)	8, 11.025, 12, 16, 22.05, 24, 32, 44.1, 48, 88.2, 96, 176.4, 192

Supported number of quantization bits (bit)(2)	16/24
Supported channel mode	1ch (1/0), 2ch (2/0)

(1) Audio sources higher than 96 kHz/24 bit are down-converted to 96 kHz/24 bit.

(2) Multi-channel audio sources are converted to 2ch.

■ FLAC

Supported sampling frequency (kHz)(1)	8, 11.025, 12, 16, 22.05, 24, 32, 44.1, 48, 88.2, 96, 176.4, 192
Supported number of quantization bits (bit)(2)	16/24

(1) Audio sources higher than 96 kHz/24 bit are down-converted to 96 kHz/24 bit.

(2) Multi-channel audio sources are converted to 2ch.

■ ALAC

Supported sampling frequency (kHz)(1)	8, 11.025, 12, 16, 22.05, 24, 32, 44.1, 48, 64, 88.2, 96
Supported number of quantization bits (bit)(2)	16/24

(1) Audio sources higher than 96 kHz/24 bit are down-converted to 96 kHz/24 bit.

(2) Multi-channel audio sources are converted to 2ch.

■ Ogg Vorbis

Supported sampling frequency (kHz)(1)	8, 11.025, 16, 22.05, 32, 44.1, 48
Supported bit rate (kbps)(2)	32 to 500

(1) Audio sources higher than 96 kHz/24 bit are down-converted to 96 kHz/24 bit.

(2) VBR (Variable Bit Rate) is supported.

■ File names

The only files that can be recognized as MP3/WMA/AAC/WAV(LPCM)/FLAC/ALAC/Ogg Vorbis and played are those with the

extension ".mp3" / ".wma" / ".m4a" / ".3gp" / ".aac" / ".wav" / ".flac" / ".fla" / ".ogg" / ".ogx" / ".oga".

Save MP3/WMA/AAC/WAV(LPCM)/FLAC/ALAC/Ogg Vorbis files with a ".mp3"/ ".wma" / ".m4a" / ".3gp" / ".aac" / ".wav" / ".flac" / ".fla" / ".ogg" / ".ogx" / ".oga".

■ About ID3 tags, WMA tags, AAC tags, tags, and Vorbis comments

- MP3 files have ancillary character information called ID3 tags that can store song artist names, title names, album names, and more.
- WMA files have ancillary character information called WMA tags that can store song artist names, title names, album names, and more.
- AAC files have ancillary character information called AAC tags that can store song artist names, title names, album names, and more.
- WAV (LPCM) files have ancillary character information called tags that can store song artist names, title names, album names, and more.
- FLAC files have ancillary character information called tags that can store song artist names, title names, album names, and more.
- ALAC files have ancillary character information called tags that can store song artist names, title names, album names, and more.
- Ogg Vorbis files have ancillary text information called Vorbis comment that allows saving of the song artist names, title names, album names, and more.

■ High resolution sound sources

This device supports high-resolution sound sources. The definition of high-resolution is based on the standards of groups such as the CTA (Consumer Technology Association).

Supported formats and playable media are as follows.

Supported formats

WAV, FLAC, ALAC, Ogg Vorbis

Playable media

USB flash drive

iPhone/iPod

Trademark and design certification information





Use of the Made for Apple badge means that an accessory has been designed to connect specifically to the Apple product(s) identified in the badge, and has been certified by the developer to meet Apple performance standards.

Apple is not responsible for the operation of this vehicle or its compliance with safety and regulatory standards.

Please note that the use of this accessory with an Apple product may affect wireless performance.

iPhone, iPod, iPod touch, iPad, iPad mini, iPad Pro, and Lightning are trademarks of Apple Inc., registered in the U.S. and other countries.

Made for

- iPhone SE (2nd generation)
- iPhone 12 Pro Max
- iPhone 12 Pro
- iPhone 12
- iPhone 12 mini
- iPhone 11 Pro Max
- iPhone 11 Pro
- iPhone 11

- iPhone XS Max
- iPhone XS
- iPhone XR
- iPhone X
- iPhone 8 Plus
- iPhone 8
- iPhone 7 Plus
- iPhone 7
- iPhone SE
- iPhone 6s Plus
- iPhone 6s
- iPhone 6 Plus
- iPhone 6
- iPhone 5s
- iPad Pro 10.5-inch
- iPad Pro 12.9-inch (5th generation)
- iPad Pro 12.9-inch (4th generation)
- iPad Pro 12.9-inch (3rd generation)
- iPad Pro 12.9-inch (2nd generation)
- iPad Pro 12.9-inch (1st generation)
- iPad Pro 11-inch (3rd generation)
- iPad Pro 11-inch (2nd generation)
- iPad Pro 11-inch (1st generation)
- iPad Pro 9.7-inch
- iPad Air (3rd generation)
- iPad Air 2
- iPad Air
- iPad mini (5th generation)
- iPad mini 4
- iPad mini 3
- iPad mini 2

- iPad (8th generation)
- iPad (7th generation)
- iPad (6th generation)
- iPad (5th generation)
- iPod touch (7th generation)
- iPod touch (6th generation)

Apple CarPlay

Trademark and design certification information

Use of the Apple CarPlay logo means that a vehicle user interface meets Apple performance standards. Apple is not responsible for the operation of this vehicle or its compliance with safety and regulatory standards. Please note that the use of this product with iPhone, iPod, or iPad may affect wireless performance.

Apple CarPlay is a trademark of Apple Inc.

Android and Android Auto

Android and Android Auto are trademarks of Google LLC.

USB flash drive

Music files recorded using a computer

The following music files can be played.

- MP3

- WMA
- AAC
- FLAC
- WAV
- ALAC
- Ogg Vorbis

MP3/WMA/AAC

Certain restrictions apply to the standards of the MP3/WMA/AAC files that can be used, and the media and formats that store such files. Microsoft, Windows, and Windows Media are the registered trademarks of Microsoft Corporation in the USA and other countries.

The specifications of the music data that can be used are as follows.

MP3

MP3 (MPEG Audio LAYER 3) is the standard format related to audio compression technology. When MP3 is used, the file can be compressed to approximately 1/10 the size of the original file.

WMA

WMA (Windows Media Audio) is the audio compression format of Microsoft Corporation. This can compress files to an even smaller size than MP3.

This product is protected by certain intellectual property rights of Microsoft. Use or distribution of such technology outside of this product is prohibited without a license from Microsoft.

AAC

AAC (Advanced Audio Coding) is the standard format related to audio compression technology that is used in MPEG2 and MPEG4.

Bluetooth®

The Bluetooth® specifications and profiles that can be used are as follows.

Item	Bluetooth® Audio
Supported Bluetooth® specifications	Bluetooth® Core Specification Ver. 5.0 or later
Supported profiles	● A2DP (Advanced Audio Distribution Profile) profile for transmitting music data: Ver. 1.3.2 or later ● AVRCP (Audio/Video Remote Control Profile) profile for controlling (playing, stopping, etc.) portable audio from a multimedia system: Ver. 1.6.2 or later
Supported codecs	LDAC™/AAC/SBC

INFORMATION

This is not a guarantee that all Bluetooth® devices can connect to the multimedia system.

● Certification

Bluetooth® is a registered trademark of Bluetooth SIG, Inc.

■ **LDAC**

LDAC and LDAC logo are trademarks of Sony Corporation.

Wi-Fi®

- Wi-Fi® and WMM® are registered trademarks of Wi-Fi Alliance®.
- Wi-Fi Protected Setup™, Wi-Fi CERTIFIED™, WPA™, WPA2™ and WPA3™ are trademarks of Wi-Fi Alliance®.

Gracenote®

When music is played, the database of the multi media system is searched for the album name, artist name, genre, and track name. If the corresponding information is stored in the database, then the information is assigned automatically. The Gracenote® media database is used for the database information stored in this multi media system.

Gracenote® media database



- The title information assigned automatically may differ from the actual title information.
- The contents of the data provided by the "Gracenote® media database" is not guaranteed to be 100% accurate.
- Gracenote, the Gracenote logo and logotype, "Powered by Gracenote" and Gracenote MusicID are either registered trademarks or trademarks of Gracenote, Inc. in the United States and/or other countries.

QR Code

The word "QR Code" is registered trademark of DENSO WAVE INCORPORATED in Japan and other countries.

Map data

©2025 HERE

Visit the link below for the data license.

https://legal.here.com/terms/general-content-supplier/terms-and-notices/

END USER LICENSE AGREEMENT

https://legal.here.com/en-gb/terms/end-user-license-agreement

HD Radio™/SiriusXM® Satellite Radio*1





Using HD Radio™ technology

HD Radio™ Technology is the digital evolution of analog AM/FM radio. Your radio product has a special receiver which allows it to receive digital broadcasts (where available) in addition to the analog broadcasts it already receives. Digital broadcasts have better sound quality than analog broadcasts as digital broadcasts provide free, crystal clear audio with no static or distortion. For more information, and a guide to available radio stations and programming, refer to www.hdradio.com.

HD Radio™ features included in this radio:

- Digital Sound: HD Radio™ broadcasts deliver crystal-clear, digital audio quality to listeners.
- Multicast Channels (HD2/HD3): FM stations can provide additional digital only audio programming with expanded content and format choices on HD2/HD3 channels.
- Program Service Data (PSD): PSD gives you on-screen information such as artist name and song title.
- Artist Experience Images related to the broadcast are displayed on the radio screen, such as album cover art and station logos.

*1 : This function is not available in some regions.

INFORMATION

Certification

HD Radio Technology manufactured under license from iBiquity Digital Corporation. U.S. and Foreign Patents. For patents see http://dts.com/patents.

HD Radio, Artist Experience, and the HD, HD Radio, and "ARC" logos are registered trademarks or trademarks of iBiquity Digital Corporation in the United States and/or other countries.

HOW TO SUBSCRIBE TO SiriusXM Services

All SiriusXM services, including satellite and streaming radio and data services require a subscription, sold separately or as a package by Sirius XM Radio Inc. (or, in Canada, Sirius XM Canada Inc.), after any trial subscription which may be included with your vehicle purchase or lease. To subscribe after your trial subscription, call 1-877-447-0011 (U.S.A) or 1-877-438-9677 (Canada). SiriusXM and all related marks and logos are trademarks of Sirius XM Radio Inc.

IMPORTANT INFORMATION ABOUT YOUR TRIAL SUBSCRIPTION:

Your SiriusXM services will automatically stop at the end of your trial unless you decide to continue service. If you decide to continue service, the paid subscription plan you choose will automatically renew and you will be charged the rate in effect at that time and according to your chosen payment method. Fees and taxes apply. You may cancel at any time through online methods or by calling 1-866-635-2349(U.S.A) or 1-888-539-7474(Canada). See SiriusXM Customer Agreement and Privacy Policy for complete terms at www.siriusxm.com(U.S.A) or care@siriusxm.ca (Canada). All fees, content and features subject to change. Traffic information not available in all markets.

Certain features and/or content may not be available in vehicles with SiriusXM with 360L unless an active data connection is enabled in the vehicle.

ABOUT SiriusXM Services

Most in-car trials today include SiriusXM’s Platinum plan.

■ SiriusXM Platinum Plan Trial Subscription

Listen everywhere with the Platinum Plan trial subscription. You get every channel available in your ride, plus you can listen on the SXM APP and online — so you can enjoy the best SiriusXM has to offer, anywhere life takes you. This package gives you all of our premium programming, including Howard Stern, every NFL, MLB® and NBA game, every NASCAR® race, NHL® games, 24/7 talk channels dedicated to the biggest leagues, and more. You get all kinds of ad-free music, including artist-dedicated channels and more, plus sports, news, talk and entertainment.

■ RADIO OPERATION

Look for the Sirius, XM, SiriusXM, Band, SAT, AUX, Radio or Source button and you're in. If you can't hear us, it's easy to get started: Locate your Radio ID, or check [**Help and support**] on the SiriusXM setting screen. If you don't see your number there, go to siriusxm.com/activation help to find it. Visit siriusxm.com/refresh or call 1-855-MYREFRESH (697-3373) to send a refresh signal to your radio. Canadian Customers: Locate your Radio ID, or check [**Help and support**] on the SiriusXM setting screen. Visit siriusxm.ca/refresh to send a refresh signal to your radio or call 1-888-539-7474 for service.

⚠ NOTICE

- It is prohibited to copy, decompile, disassemble, reverse engineer, hack, manipulate, or otherwise make available any technology or software incorporated in receivers compatible with the SiriusXM Satellite Radio System or that support the SiriusXM website, the streaming service or any of its content. Furthermore, the AMBE® voice compression software included in this product is protected by intellectual property rights including patent rights, copyrights, and trade secrets of Digital Voice Systems, Inc.
- Note: this applies to SiriusXM Satellite Radio receivers only and not SiriusXM Ready devices.

Displaying the radio ID

Each SiriusXM tuner is identified with a unique radio ID. The radio ID is required when activating an SiriusXM Satellite service or when reporting a problem.

- To see radio ID on the screen, go to [**Sound & Media**] in the setting screen and select SiriusXM, and then select [**Help and support**].

Certification

CAUTION: Radio Frequency Radiation Exposure
This equipment complies with FCC radiation exposure limits set forth for an uncontrolled environment and meets the FCC radio frequency (RF) Exposure Guidelines. This equipment should be installed and operated keeping the radiator at least 20cm or more away from person's body in normal use position.

Co-location: This transmitter must not be co-located or operated in conjunction with any other antenna or transmitter.

This device complies with part 15 of the FCC Rules. Operation is subject to the following two conditions: (1) This device may not cause harmful interference, and (2) this device must accept any interference received, including interference that may cause undesired operation.

FCC WARNING
Changes or modifications not expressly approved by the party responsible for compliance could void the user's authority to operate the equipment.

IC: 2024B-TN0022A

This device contains licence-exempt transmitter(s)/receiver(s) that comply with Innovation, Science and Economic Development Canada's licence-exempt RSS(s).
Operation is subject to the following two conditions:
1. This device may not cause interference.
2. This device must accept any interference, including interference that may cause undesired operation of the device.

This equipment complies with ISED radiation exposure limits set forth for an uncontrolled environment and meets RSS-102 of the ISED radio frequency (RF) Exposure rules.
This equipment should be installed and operated keeping the radiator at least 20cm or more away from person's body.

L'émetteur/récepteur exempt de licence contenu dans le présent appareil est conforme aux CNR d'Innovation, Sciences et Développement économique Canada applicables aux appareils radio exempts de licence.
L'exploitation est autorisée aux deux conditions suivantes :
1. L'appareil ne doit pas produire de brouillage;
2. L'appareil doit accepter tout brouillage radioélectrique subi, même si le brouillage est susceptible d'en compromettre le fonctionnement.

Cet équipement est conforme aux limites d'exposition aux rayonnements énoncées pour un environnement non contrôlé et respecte les règles d'exposition aux fréquences radioélectriques (RF) CNR-102 de l'ISDE.
Cet équipement doit être installé et utilisé en gardant une distance de 20 cm ou plus entre le radiateur et le corps humain.

FCC ID: JOYCW1011

NOTE
This device complies with part 15 of the FCC Rules. Operation is subject to the following two conditions: (1) This device may not cause harmful interference, and (2) this device must accept any interference received, including interference that may cause undesired operation.
FCC WARNING
Changes or modifications not expressly approved by the party responsible for compliance could void the user's authority to operate the equipment.
Co-location: This transmitter must not be co-located or operated in conjunction with any other antenna or transmitter.
CAUTION : Radio Frequency Radiation Exposure
This equipment complies with FCC radiation exposure limits set forth for an uncontrolled environment and meets the FCC radio frequency (RF) Exposure Guidelines. This equipment should be installed and operated keeping the radiator at least 20cm or more away from person's body.

IC: 574B-CW1011

NOTE
This device contains licence-exempt transmitter(s)/receiver(s) that comply with Innovation, Science and Economic Development Canada's licence-exempt RSS(s). Operation is subject to the following two conditions:
(1) This device may not cause interference.
(2) This device must accept any interference, including interference that may cause undesired operation of the device.
The antenna cannot be removed (and changed) by user.
Co-location: This transmitter must not be co-located or operated in conjunction with any other antenna or transmitter.
CAUTION: Radio Frequency Radiation Exposure
This equipment complies with ISED radiation exposure limits set forth for an uncontrolled environment and meets RSS-102 of the ISED radio frequency (RF) Exposure rules. This equipment should be installed and operated keeping the radiator at least 20 cm or more away from person's body.

NOTE
L'émetteur/récepteur exempt de licence contenu dans le présent appareil est conforme aux CNR d'Innovation, Sciences et Développement économique Canada applicables aux appareils radio exempts de licence. L'exploitation est autorisée aux deux conditions suivantes :
(1) L'appareil ne doit pas produire de brouillage;
(2) L'appareil doit accepter tout brouillage radioélectrique subi, même si le brouillage est susceptible d'en compromettre le fonctionnement.
L'utilisateur n'est pas autorisé à retirer (ou modifier) l'antenne.
Emplacement: Cet émetteur ne doit pas être installé ou utilisé conjointement avec d'autres antennes ou émetteurs.
ATTENTION : exposition aux radiofréquences
Cet équipement est conforme aux limites d'exposition aux rayonnements ISDE établies pour un environnement non contrôlé et satisfait à la norme CNR-102 de la réglementation ISDE sur l'exposition aux radiofréquences (RF). Cet équipement doit être installé et utilisé avec un minimum de 20 cm de distance entre la source de rayonnement et le corps.

A

Adjusting
- Brightness..... 64
- Clock..... 59
- Contrast..... 64
- Image quality..... 64
- System audio volume..... 66

Adjusting the volume.....197
- System audio volume..... 66

AM radio.....162

Android Auto
- Playing Android Auto..... 177
- Registered smartphone..... 132
- Unregistered smartphone..... 129

Answering calls/Receiving calls... 203

Apple CarPlay
- Playing Apple CarPlay..... 174
- Registered smartphone..... 126
- Unregistered smartphone..... 123

Audio.....162

Audio system on/off.....31

Auto sound levelizer.....66

B

Bluetooth®
- Setting as a primary device... 109

Bluetooth® audio.....180

Bluetooth® devices
- Connect..... 105
- Delete..... 104
- Register..... 100
- Setting as a secondary device.... 110

C

Cellular phone
- Connect..... 105
- Delete..... 104
- Register..... 100

Cleaning the camera.....243,288

Clock settings.....59

Compatible profiles.....99

Connect
- Bluetooth® devices..... 105
- iPod..... 34
- USB Type-C port..... 34
- Wi-Fi®..... 114
- Wi-Fi® Hotspot..... 117

Connected Services.....222

Contact data (Phone number)
- Transfer..... 214

D

Date and time settings.....59

Declined call.....208

Declining calls.....205

Delete
- Bluetooth® devices..... 104

Deleting data
- User profile..... 56

Destination Assist.....150

Destination search 145

E

Ending calls.....211

Entering letters.....26

Entering numbers..... 26

F

FM radio..... 162
Format information..... 300
Full route map..... 153

G

General settings.....59
Gracenote®..... 300

H

Hands-free (Phone).....188
HD radio™.....162
High resolution sound sources.... 300

I

Information displayed on the map screen 144
Integrated Streaming..... 185
Intelligent Assistant system.....35
iPod/iPhone..... 171

L

Language settings..... 59
Listening to the radio.....162

M

Making calls
Favorites list..... 200
In-call.....209
Message.....220
Numeric keypad input.....202
Outgoing or incoming call history 199
Registered contacts.....201
Making conference calls.....210
Map details screen.....82
Map option 143
Map screen..... 27
Message.....216

N

Navigation.....142
Notifications settings.....62

O

Operating the map screen.....28
Operating the touch screen. 21,24

P

Panoramic view monitor.....250
Phone (receiving calls and receiver).....197
Playback
Android Auto.....177
Apple CarPlay..... 174
Bluetooth® audio..... 180
Integrated Streaming.....185
iPod/iPhone.....171
USB flash drive.....167
POI suggestion.....149
Privacy lock..... 72

R

Receiving second call/Call-waiting.....208
Register
Bluetooth® devices.....100
Dealer information..... 71
Registering
Face identification..... 57
Replying to messages..... 218
Restarting the system.....15

Route guidance 155
Route option..... 84

S

Screen display ON/OFF..... 64
Searching by keywords..... 44
Second call..... 208
Sending new messages.....218
Settings
Apps settings.....93
Bluetooth® device settings..... 89
Dealer information settings.....71
General settings..... 59
Multimedia system settings..... 52
Navigation system settings.....81
Notifications settings..... 62
Panoramic view monitor settings. 278
Privacy lock..... 72
Privacy settings..... 72
Screen settings.....64
Software update..... 75
Sound and media settings.....66
User profile settings.....56
Voice control settings..... 70
Wi-Fi® Hotspot settings..... 87
Wi-Fi® settings..... 85
SiriusXM radio..... 162
Smartphone
Connect..... 105
Delete..... 104
Register..... 100
Software update..... 75
Starting route guidance 152
Status icons.....19
Steering switches
Audio..... 31
Hands-free (Phone)..... 197
Voice control.....38
Switching phones..... 212

T

Toyota account.....46
Toyota parking assist monitor 230
Displaying the guide screen.. 232
Transfer
Contact data (Phone number)..... 214
Troubleshooting
Hands-free (Phone)..... 192
Panoramic view monitor..... 295
Radio..... 165
Toyota parking assist monitor247
Typical voice guidance prompts 159

U

USB flash drive.....167
User profile
Changing and linking a profile. 54
Linking a profile..... 46

V

Voice commands.....40
Volume adjustment
Audio..... 31

W

Wi-Fi® Hotspot settings..... 87
Wi-Fi® settings..... 85

cU-7

Publication No. OM42N44U
Part No. 01999-42N44
Printed in Japan 01-2607 I
bZ Multimedia（北米 U）