
BUICK
2027
Enclave
Owner's Manual

NOT FOR RESALE

# Contents

Introduction ..... 1
Keys, Doors, and Windows ..... 7
Seats and Restraints ..... 32
Storage ..... 84
Instruments and Controls ..... 89
Lighting ..... 121
Infotainment System ..... 129
Climate Controls ..... 157
Driving and Operating ..... 164
Vehicle Care ..... 249
Service and Maintenance ..... 320
Technical Data ..... 328
Customer Information ..... 331
Reporting Safety Defects ..... 341
OnStar ..... 344
Connected Services ..... 349
Index ..... 353

# Introduction

## California Proposition 65 Warning

**WARNING**

**Operating, servicing and maintaining a passenger vehicle or off-highway motor vehicle can expose you to chemicals including engine exhaust, carbon monoxide, phthalates, and lead, which are known to the State of California to cause cancer and birth defects or other reproductive harm. To minimize exposure, avoid breathing exhaust, do not idle engine except as necessary, service your vehicle in a well-ventilated area and wear gloves or wash your hands frequently when servicing your vehicle. For more information go to www.P65Warnings.ca.gov/passenger-vehicle.**


©2026 General Motors LLC. All Rights Reserved.

NOT FOR RESALE



## Introduction







The names, logos, emblems, slogans, vehicle model names, and vehicle body designs appearing in this manual including, but not limited to, GM, the GM logo, BUICK, the BUICK Emblem, and ENCLAVE are trademarks and/or service marks of General Motors LLC, its subsidiaries, affiliates, or licensors.

For vehicles first sold in Canada, substitute the name "General Motors of Canada Company" for Buick Motor Division wherever it appears in this manual.

This manual describes features that may or may not be on the vehicle because of optional equipment that was not purchased on the vehicle, model variants, country specifications, features/applications that may not be available in your region, or changes subsequent to this publication's release, including changes in standard or optional content.

Refer to the purchase documentation relating to your specific vehicle to confirm the features.

## Canadian Vehicle Owners

You can obtain a copy of this guide in French from your dealer, at www.helminc.com, or from the following address:

### Propriétaires Canadiens

On peut obtenir un exemplaire de ce guide en français auprès du concessionnaire ou à l'adresse suivante:

Helm, Incorporated
Attention: Customer Service
47911 Halyard Drive
Plymouth, MI 48170
USA

## Québec Consumer Protection Act Disclosure (Québec Customers Only)

Information regarding the availability of replacement parts, repair services, and information necessary to maintain or repair our products (applicable to Quebec consumers only).

Pursuant to the Consumer Protection Act (Québec) and the applicable regulation, General Motors of Canada Company does not guarantee the availability of replacement parts or repair services for its products, nor does it guarantee the availability of information necessary to maintain or repair its products. General Motors of Canada Company does offer access to certain automobile data for purposes of diagnostics, maintenance or repair in accordance with section 39.4 of the Consumer Protection Act (Québec).

## Danger, Warning, and Caution

Warning messages found on vehicle labels and in this manual describe hazards and what to do to avoid or reduce them.

NOT FOR RESALE



**⚠ Danger**

Danger indicates a hazard with a high level of risk which will result in serious injury or death.

**⚠ Warning**

Warning indicates a hazard that could result in injury or death.

**Caution**

Caution indicates a hazard that could result in property or vehicle damage.



A circle with a slash through it is a safety symbol which means "Do not," "Do not do this," or "Do not let this happen."

## Symbols

The vehicle has components and labels that use symbols instead of text. Symbols are shown along with the text describing the operation or information relating to a specific component, control, message, gauge, or indicator.

### Vehicle Symbol Chart

This chart defines the symbols that may be found on the vehicle.

: Air Conditioning System

: Air Conditioning Refrigerant Oil

: Airbag Readiness Light

: Antilock Brake System (ABS)

: Brake System Warning Light

: Dispose of Used Components Properly

: Do Not Apply High Pressure Water

: Engine Coolant Temperature

: Flame/Fire Prohibited

: Flammable

: Forward Collision Alert

: Fuse Block Cover Lock Location

: Fuses

: ISOFIX/LATCH System Child Restraints

: Keep Fuse Block Covers Properly Installed

: Lane Change Alert

: Lane Departure Warning

: Lane Keep Assist

: Malfunction Indicator Light

: Oil Pressure

: Park Assist

: Pedestrian Ahead Indicator

: Power

: Rear Cross Traffic Alert

: Registered Technician

: Remote Start

: Risk of Electrical Fire

: Seat Belt Reminders

: Side Blind Zone Alert

: Stop/Start

: Tire Pressure Monitor

NOT FOR RESALE



: Traction Control/StabiliTrak/Electronic Stability Control

: Under Pressure

: Vehicle Ahead Indicator

Here are some additional symbols that may be found on the vehicle and what they mean. See the features in this manual for information.

: Shown when the owner's manual has additional instructions or information.

: Shown when the service manual has additional instructions or information.

: Shown when there is more information on another page — "see page."

NOT FOR RESALE



## Instrument Panel Overview

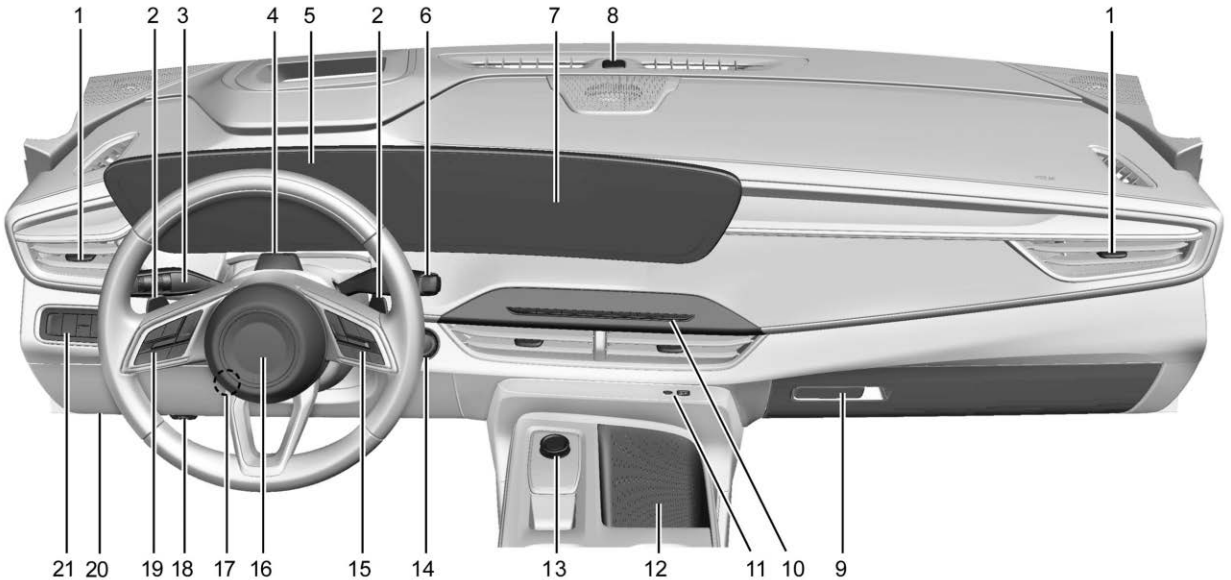


1. Air Vents. See *Air Vents* ⇨ *161*.
2. Manual Mode. See *Manual Mode* ⇨ *184*
3. Turn Signal Lever. See *Turn and Lane-Change Signals* ⇨ *124*.

Windshield Wiper/Washer. See *Windshield Wiper/Washer* ⇨ *91*.

NOT FOR RESALE



Rear Window Wiper/Washer. See *Rear Window Wiper/Washer* ⇨ *92*.

4. Driver Monitoring System Camera (If Equipped). See *Driver Attention Assist* ⇨ *240*.
5. Instrument Cluster. See *Instrument Cluster* ⇨ *97*.
6. Shift Lever. See *Automatic Transmission* ⇨ *181*.
7. Infotainment Display. See *Using the System* ⇨ *131*.
8. Light Sensor. See *Automatic Headlight System* ⇨ *123*.
9. Glove Box. See *Glove Box* ⇨ *84*.
10. Dual Automatic Climate Control System. See *Dual Automatic Climate Control System* ⇨ *157*.
11. USB Port. See *USB Port* ⇨ *135*.
12. Wireless Charging. See *Wireless Charging* ⇨ *94*.
13. Infotainment Controls. See *Overview* ⇨ *130*.
14. ENGINE START/STOP Button. See *Ignition Positions* ⇨ *176*.
15. Driver Information Center. See *Driver Information Center (DIC)* ⇨ *111*.

    Steering Wheel Controls. See *Steering Wheel Controls* ⇨ *131*.

    Heated Steering Wheel. See *Heated Steering Wheel* ⇨ *90*.
16. Horn. See *Horn* ⇨ *91*.
17. Steering Wheel Adjustment (Out of View). See *Steering Wheel Adjustment* ⇨ *90*.
18. Hood Release. See *Hood* ⇨ *251*.
19. Forward Collision Alert System. See *Forward Collision Alert (FCA) System* ⇨ *228*.

    Adaptive Cruise Control. See *Adaptive Cruise Control (Advanced)* ⇨ *191*.

    Super Cruise. See *Super Cruise* ⇨ *201*.
20. Data Link Connector (Out of View). See *Malfunction Indicator Light (Check Engine Light)* ⇨ *102*.
21. Electric Parking Brake. See *Electric Parking Brake* ⇨ *186*.

Driver Mode Control. See *Driver Mode Control* ⇨ *190*.

All-Wheel Drive (If Equipped). See *All-Wheel Drive* ⇨ *185*.

Auto Stop/Start Disable Switch. See *Stop/Start System* ⇨ *178*.

Instrument Panel Illumination Control. See *Instrument Panel Illumination Control* ⇨ *125*.

NOT FOR RESALE



# Keys, Doors, and Windows

**Keys and Locks**
Keys ..... 7
Remote Key ..... 8
Remote Key Operation ..... 8
Remote Start ..... 12
Door Locks ..... 14
Power Door Locks ..... 15
Delayed Locking ..... 15
Automatic Door Locks ..... 16
Lockout Protection ..... 16
Safety Locks ..... 16
Digital Key ..... 17

**Doors**
Liftgate ..... 18

**Vehicle Security**
Vehicle Security ..... 23
Vehicle Alarm System ..... 23
Immobilizer Operation ..... 24

**Exterior Mirrors**
Convex Mirrors ..... 24
Power Mirrors ..... 25
Folding Mirrors ..... 25
Heated Mirrors ..... 26
Automatic Dimming Mirror ..... 26

**Interior Mirrors**
Interior Rearview Mirrors ..... 26
Manual Rearview Mirror ..... 26
Automatic Dimming Rearview Mirror ..... 26
Rear Camera Mirror ..... 26

**Windows**
Windows ..... 28
Power Windows ..... 29
Sun Visors ..... 30

**Roof**
Sunroof ..... 30

# Keys and Locks

## Keys

**⚠ Warning**

Leaving children in a vehicle with a remote key is dangerous and children or others could be seriously injured or killed. They could operate the power windows or other controls or make the vehicle move. The windows will function with the remote key in the vehicle, and children or others could be caught in the path of a closing window. Do not leave children in a vehicle with a remote key.

NOT FOR RESALE







Use the mechanical key inside the remote key for all locks.

To remove the mechanical key, press the button on the side of the remote key near the bottom, and pull the mechanical key out. Never pull the mechanical key out without pressing the button.

The mechanical key may have a bar-coded key tag that the dealer or qualified locksmith can use to make new keys. Store this information in a safe place, not in the vehicle.

See your dealer if you need a replacement or additional key.

If it becomes difficult to turn a key, inspect the key blade for debris. Periodically clean with a brush or pick.

With an active OnStar or connected service plan, an OnStar Advisor may remotely unlock the vehicle. See *OnStar Overview* ⇨ *344*.

If locked out of the vehicle, see *Roadside Assistance Program* ⇨ *336*.

## Remote Key

If your remote key is not working correctly:

- The remote key may be too far from the vehicle.
- Other vehicles or objects may be blocking the signal.
- The battery may need replacing. See "Battery Replacement" under *Remote Key Operation* ⇨ *8*.

If the remote key is still not working correctly after checking the distance, location, and battery, see your dealer or a qualified technician for service.

## Remote Key Operation

The remote key operates various functions from up to 60 m (197 ft) away and includes a mechanical key for locks. See *Keys* ⇨ *7*.



NOT FOR RESALE



**Functions**

To view function settings, go to the infotainment home screen and select Settings > Vehicle > Remote Lock, Unlock, Start.

: Press to lock all doors and arm the alarm system. See *Vehicle Alarm System* ⇨ *23*. If enabled, the turn signals flash.

If you press when the driver door is open and the vehicle is on, all doors will lock and the driver door will immediately unlock.

: If enabled, press twice within five seconds and the turn signals flash and the horn sounds to confirm the vehicle is locked.

: Press once to unlock the driver door and disarm the alarm system. See *Vehicle Alarm System* ⇨ *23*.

: Press twice within three seconds to unlock all doors.

If enabled, the turn signal lights flash twice to indicate the doors are unlocked. You can program the remote key to unlock all doors with one press or program the exterior lights to turn on. Follow the onscreen prompts in Settings.

x2 x2 : Press twice to open or close the liftgate. See *Liftgate* ⇨ *18*.

x2 : Press once to stop the liftgate motion.

: Press and release within one second to initiate the vehicle locator. The exterior lights flash and the horn sounds three times. Press and hold for at least three seconds to sound the panic alarm.

The horn sounds and the turn signals flash for about 30 seconds or until you press again or start the vehicle.

x2 x2 : Press twice from outside the vehicle to remote start. You cannot start the vehicle if a remote key is left inside. See *Remote Start* ⇨ *12*.

If equipped, you can operate the folding mirrors through the remote key. See *Folding Mirrors* ⇨ *25*.

If equipped, you can express-operate the windows through the remote key. See *Power Windows* ⇨ *29*.

## Keyless Access Operation

The Keyless Access system allows you to access the doors and liftgate without removing the remote key from your pocket or bag. The remote key must be within 1 m (3 ft) of the liftgate or door being opened.

**Keyless Unlocking**

When the doors are locked, press the button on the driver door handle to unlock the driver door. Press the button again within five seconds to unlock the passenger doors and liftgate. When the doors are locked, press the button on a passenger door handle, if equipped, to unlock all doors.

To program all doors to unlock when you press the driver door button once, on the infotainment home screen, select Settings > Vehicle > Remote Lock, Unlock, Start.

**Keyless Locking**

Pressing the driver door button will lock all doors if any of the following conditions occur:

- The button was used to unlock all doors.
- Any door has been opened and all doors are now closed.

Pressing any passenger door button will lock all doors if any of the following conditions occur:

- It has been more than five seconds since the first button press.
- All doors were unlocked with two button presses.

NOT FOR RESALE



- Any door has been opened and all doors are now closed.

### Passive Locking

The vehicle locks several seconds after you close all doors, turn the vehicle off, and remove at least one or all remote keys from the interior. If other electronic devices interfere with the remote key signal, the vehicle may not detect the remote key inside the vehicle. If passive locking is enabled, the doors may lock with the remote key inside the vehicle. Do not leave the remote key in an unattended vehicle.

To view available settings from the infotainment home screen, touch Settings > Vehicle > Remote Lock, Unlock, Start.

#### Temporary Disable of Passive Locking

To temporarily disable passive locking, turn the vehicle off. With the driver door open, press and hold on the interior door switch for at least four seconds, or until you hear an audible alert. Keep the remote key outside the vehicle, close the driver door, and wait at least 10 seconds. If the doors do not lock, passive locking is temporarily disabled.

### Mechanical Key Access

To access a vehicle with the mechanical key in case of a weak remote key battery, see *Door Locks* ⇨ *14*.

### Remote Key Alerts

To view available settings for these alerts, on the infotainment home screen, select Settings > Vehicle > Remote Lock, Unlock, Start.

**Wireless Charging Error:** Placing the remote key on a wireless charger may prompt NO KEY FOUND on the Driver Information Center, and the vehicle may not start. Do not place the remote key on the wireless charger. See *Wireless Charging* ⇨ *94*.

**Remote Key Removed From Vehicle Alert:** If you turn the vehicle on with a door open, and then close all doors, the vehicle will check for remote keys or digital keys inside. If the vehicle does not detect a remote key or digital key, or you started the vehicle with only a key card present, the Driver Information Center displays NO KEY FOUND and the horn sounds three times. This occurs only once each time you drive the vehicle.

**Remote Key Left in Vehicle Reminder:** When you turn off the vehicle and leave a remote key inside, the horn sounds three times after you close all doors.

Other conditions can impact the performance of the remote key. See *Remote Key* ⇨ *8*.

### Programming Remote Keys to the Vehicle

Only remote keys programmed to the vehicle will work. If a remote key is lost or stolen, a replacement can be purchased and programmed through your dealer. The vehicle can be reprogrammed so that lost or stolen remote keys no longer work. Any remaining remote keys will need to be reprogrammed. Each vehicle can have up to eight remote keys matched to it.

### Starting the Vehicle with a Low Remote Key Battery

For improved vehicle security, the remote key is equipped with a motion sensor. If the remote key has been idle for an extended period, when you start the vehicle, the Driver Information Center may display KEY IN SLEEP MODE, MOVE KEY, THEN START. Move the remote key slightly and try starting the vehicle.

NOT FOR RESALE



If the remote key battery is weak or if there is interference with the signal, when you start the vehicle, the Driver Information Center may display NO KEY FOUND, REPLACE BATTERY IN KEY or NO REMOTE KEY WAS DETECTED PLACE KEY IN KEY POCKET THEN START YOUR VEHICLE.

To start the vehicle:

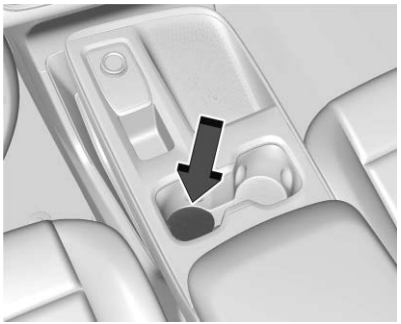

1. Place the remote key in the cupholder with the buttons facing down.
2. With the vehicle in P (Park) or N (Neutral), press the brake pedal and ENGINE START/STOP. Replace the remote key battery as soon as possible.

**Battery Replacement**

**⚠ Warning**

Never allow children to play with the remote key. The remote key contains a small battery, which can be a choking hazard. If swallowed, internal burns can occur, resulting in severe injury or death. Seek medical attention immediately if a battery is swallowed.

**⚠ Warning**

To avoid personal injury, do not touch metal surfaces on the remote key when it has been exposed to extreme heat. These surfaces can be hot to the touch at temperatures above 59 °C (138 °F).

**Caution**

When replacing the battery, do not touch any of the circuitry on the remote key. Static from your body could damage the remote key.

**Caution**

Always replace the battery with the correct type. Replacing the battery with an incorrect type could potentially create a risk of battery explosion. Dispose of used batteries according to instructions and local laws. Do not attempt to burn, crush, or cut the used battery, and avoid exposing the battery to environments with extremely low air pressures or high temperatures.

**Caution**

If the remote key is not reassembled properly, liquids could enter the housing and damage the circuitry, resulting in a remote key malfunction and/or failure. To prevent damage, always follow the steps for remote key reassembly in this manual to ensure the remote key is sealed properly whenever the remote key is opened.

Replace the battery if the Driver Information Center displays REPLACE BATTERY IN KEY. The battery is not rechargeable.

To replace the battery:

NOT FOR RESALE





1. Press the button on the side of the remote key near the bottom and pull the mechanical key out. Never pull the mechanical key out without pressing the button.



2. Use the mechanical key blade in the slot to remove the battery cover by hand.

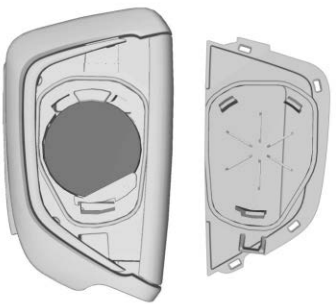

3. Remove the battery cover.
4. Pull the seal by pulling on the tab to access the battery.
5. Remove the old battery. Do not use a metal object.
6. Insert the new battery, positive side facing up. Only Panasonic CR2450 Lithium batteries have been validated to meet GM's minimum performance requirements.
7. Place the seal back into the groove around the battery compartment.
8. Replace the battery cover by snapping it back into the remote key.
9. Reinsert the mechanical key.

## Remote Start

This feature allows the engine to be started from outside the vehicle.

(x2) : This button on the remote key is for remote start.

The following features may come on automatically when the vehicle is started remotely, depending on the outside temperature:

- Climate control system, which will use the previous settings during a remote start.

NOT FOR RESALE



- Rear window defogger. The rear defog indicator light does not turn on during a remote start.
- If the outside temperature is below 7 °C (45 °F), and the rear window defogger is on, the area of the windshield beneath the windshield wipers will warm up to melt accumulated snow or ice, if equipped.
- If equipped, the heated and ventilated front seats when the vehicle personalization setting is enabled. See *Heated and Ventilated Front Seats* ⇨ *39*.
- If equipped, the heated steering wheel. See *Heated Steering Wheel* ⇨ *90*.

Laws restrict the use of remote starters in some areas. Be sure to check local regulations before using the remote starter.

Do not use remote start if the vehicle is low on fuel. The vehicle may run out of fuel.

The remote key range may be shorter while the vehicle is running.

Other conditions can affect the performance of the remote key. See *Remote Key* ⇨ *8*.

You are allowed multiple starts totaling 30 minutes of engine run time. The maximum run time of a single start is 15 minutes, and it will shut off automatically. You could do three 10 minute starts if you manually shut off after 10 minutes. The last 10 minute start would shut off automatically as your total 30 minutes will have been used.

**Starting the Engine Using Remote Start**

1. Press (x2) twice on the remote key. The turn signal lights will flash. The lights flash to confirm the request to remote start the vehicle has been received. During the remote start, the parking lights will remain on as long as the engine is running.
2. The engine will shut off after 15 minutes or after the remainder of the 30 minute total running time is used, unless you stop the remote start before engine running has completed or the vehicle is turned on.
3. After entering the vehicle during a remote start, press the brake and ENGINE START/STOP with the remote key in the vehicle to drive the vehicle.

**Additional Engine Run Time**

Remote start can be used for up to 30 minutes of total engine run time.

After two remote starts of 15 minutes, or multiple shorter time starts totaling 30 minutes have been used, the vehicle must be started normally before the remote start can be used again.

**Canceling a Remote Start**

To cancel a remote start, do any of the following:

- Press (x2). The parking lights will turn off.
- Turn on the hazard warning flashers.
- Turn the vehicle on and then back off.

**Conditions in Which Remote Start Will Not Work**

The remote start will not operate if any of the following occur:

- The ignition is in any mode other than off.
- A remote key is in the vehicle.
- The hood is not closed.
- The hazard warning flashers are on.
- There is an emission control system malfunction.
- The engine coolant temperature is too high.
- The oil pressure is low.

NOT FOR RESALE



- The 30 minutes of engine run time have been used.
- The vehicle is not in P (Park).

## Door Locks

**⚠ Warning**

Unlocked doors can be dangerous.

- Passengers, especially children, can easily open the doors and fall out of a moving vehicle. The doors can be unlocked and opened while the vehicle is moving. The chance of being thrown out of the vehicle in a crash is increased if the doors are not locked. So, all passengers should wear seat belts properly and the doors should be locked whenever the vehicle is driven.
- Do not pull the door handles while the vehicle is in motion. The door may open with only a single pull. Always use safety locks when children are in the rear seats. See *Safety Locks* ⇨ *16*.

(Continued)

**Warning (Continued)**

- Young children who get into unlocked vehicles may be unable to get out. A child can be overcome by extreme heat and can suffer permanent injuries or even death from heat stroke. Always lock the vehicle whenever leaving it.
- Outsiders can easily enter through an unlocked door when you slow down or stop the vehicle. Locking the doors can help prevent this from happening.

To lock/unlock the doors from the outside:

- Press or on the remote key. See *Remote Key Operation* ⇨ *8*.
- Use the key in the driver door. The key lock cylinder is covered with a cap.

To lock/unlock the doors from the inside:

- Press or on the power door lock switch.
- Push down on the door lock knob, if equipped, to lock a door.
- Pull the door handle once to unlock it. Pull the door handle again to unlatch it.

**Keyless Access**

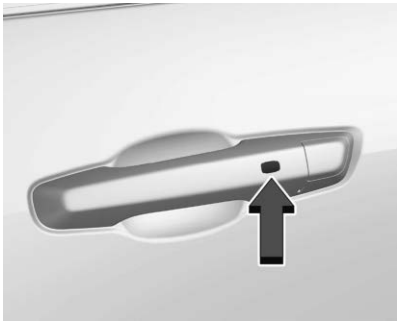

The remote key must be within 1 m (3 ft) of the liftgate or door being opened. Press the button on the door handle to open. See *Remote Key Operation* ⇨ *8*.

NOT FOR RESALE



### Driver Door Key Lock Cylinder Access (In Case of Dead Battery)

To access the driver door key lock cylinder:

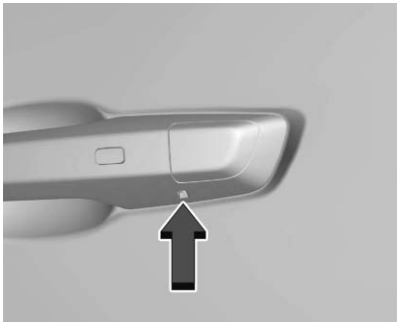

1. Insert the key into the slot at the bottom of the cap and turn counterclockwise to remove the cap.
2. Insert the key into the cylinder and turn to unlock.

To replace the cap:

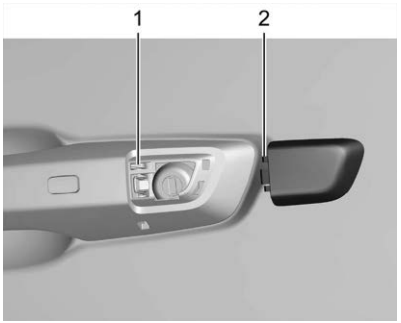


1. Position the bottom edge of the cap under the lower edge of the metal piece. The tabs (2) attach to the metal piece at the positions (1).
2. Install the cap into place.
3. Check that the cap is secure.

### Free-Turning Locks

The door key lock cylinder turns freely when either the wrong key is used, or the correct key is not fully inserted. The free-turning door lock feature prevents the lock from being forced open. To reset the lock cylinder, ensure the correct key is fully inserted into the lock cylinder. Rotate the key until you feel the lock cylinder click back into place. Remove the key and reinsert fully. Rotate the key to unlock the vehicle.

## Power Door Locks



: Press to lock the doors.

: Press to unlock the doors.

## Delayed Locking

This feature delays the door locking for five seconds after all doors are closed. While the feature is on, to request a delayed lock, press on the power door lock switch while the vehicle is off and the door is open. An audible

NOT FOR RESALE



alert will sound three times to confirm the feature is active. If you reopen a door before the end of the five-second timer, the timer will reset when you close all doors again. To lock the doors immediately, press on the door switch or remote key.

To view available settings from the infotainment home screen, touch Settings > Vehicle > Power Door Locks.

## Automatic Door Locks

The doors lock automatically when you close all the doors, turn the vehicle on, and shift out of P (Park).

If a door is unlocked, opened, and then closed, the doors will lock when you either remove your foot from the brake or drive faster than 13 km/h (8 mph).

To unlock the doors:

- Press on the power door lock switch.
- Shift into P (Park).

Automatic door locking cannot be disabled. Automatic door unlocking can be disabled or programmed to unlock all doors or only the driver door. To view available settings from the app screen on the infotainment display, select Settings > Vehicle > Power Door Locks.

## Lockout Protection

This feature protects you from locking remote keys in the vehicle.

When you have locked the vehicle with the driver door open and turned the vehicle on or to accessory mode, all of the doors will lock and then the driver door will unlock.

When you have locked the vehicle with a door open, then turned the vehicle off and closed all doors, the vehicle will check for remote keys inside. If a remote key is detected and the number of remote keys inside has not reduced, the driver door will unlock and the horn will sound three times.

Press and hold on the power door lock switch to manually override this feature.

## Safety Locks

The rear door safety locks prevent passengers from opening the rear doors from inside the vehicle.

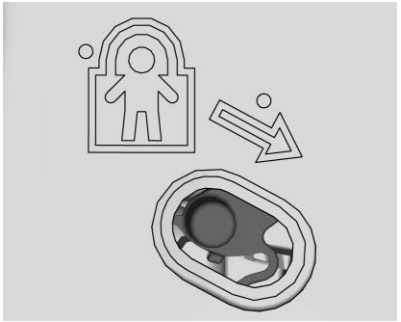

The safety locks are on the inside edge of the rear doors. To engage a safety lock:

1. Move the lever down to the lock position.
2. Close the door.
3. Repeat Steps 1 and 2 on the other door, if desired.

To open a rear door when the safety lock is on:

1. Unlock the door by pulling the inside handle, by pressing the power door unlock switch, or by using the remote key.
2. Open the door from the outside.

To disengage a safety lock:

1. Unlock the door and open it from the outside.

NOT FOR RESALE



2. Move the lever up to unlock.
3. Repeat Steps 1 and 2 on the other door, if desired.

## Digital Key

If equipped and enabled, the digital key feature allows you to access and operate the vehicle using a smart device. Many of the functions performed by a remote key can also be done using a digital key. See *Remote Key Operation* ⇨ *8*.

Bring your remote key to all service appointments at your dealer.

Digital key communicates with the vehicle using Ultrawide Band and Bluetooth Low Energy technology.

Only certain iPhone, iWatch, and Android smart devices support digital key. Please see the myBuick app or www.buick.com/support to see if your smart device is compatible.

If the smart device battery is weak or if there is interference with the signal, the Driver Information Center may display NO KEY FOUND or NO REMOTE KEY WAS DETECTED, PLACE KEY IN KEY POCKET THEN START YOUR VEHICLE when starting the vehicle. Charge the smart device battery as soon as possible.

You can use the myBuick mobile app and device Wallet to pair, manage, or delete your digital key.

If the digital key is not working:

- Check the distance. The smart device may be too far from the vehicle.
- Check the location. Other vehicles or objects may be blocking the signal. Your body could also impact the signal. Hold the smart device in your hand, away from your body, and toward the vehicle for best results.
- Check that the smart device is turned on and has sufficient battery power.
- Check the connection. Your smart device's Bluetooth connection must be enabled.
    - If it is enabled, try to turn Bluetooth off, then back on.
- Check that your smart device has the latest iOS or Android operating system (OS) downloaded.
- Go to www.buick.com/support for additional support and frequently asked questions.

If the digital key still does not work, use the key card or the commands in your phone's Wallet or myBuick app as a backup.

Bring your remote key and key card if you have the digital key serviced at your dealer.

### Setting up Digital Key

Digital key is only available if you have accepted the OnStar terms and conditions.

1. Log in to your OnStar account in the myBuick mobile app.
2. Select Controls > Keys, then follow the steps on your screen to pair your smart device.

### Using Your Digital Key

Digital key allows you to:

- Use passive entry with your smart device to lock and unlock the vehicle's doors, and access the rear compartments without a remote key.

  See "Keyless Access Operation" under *Remote Key Operation* ⇨ *8*.
- Start the vehicle with just your digital key-enabled smart device present.
- Use remote commands in the device Wallet to lock, unlock, and remote start the vehicle.
- Share your digital key with up to three additional people across eight total devices.

NOT FOR RESALE



Delete keys through the device Wallet or call an OnStar advisor for assistance.

### Key Card

| Caution |
| --- |
| Placing the key card on the wireless charger may damage the card. If the key card is damaged, it may not unlock or start the vehicle. Do not place the key card on the wireless charger. |

Your vehicle may be equipped with a key card that unlocks, locks, and starts the vehicle. The key card works by tapping it on the location of the vehicle shown on the back of the key card.

The key card is a back up to the digital key in case the smart device battery is weak or there is interference to the signal. Carry the key card at all times. Store the key card securely to prevent loss, theft, or damage. Do not write or punch holes into the key card.

Only key cards programmed to the vehicle will work. If you lose your key card or it is stolen, you can purchase and program a replacement through your dealer. To prevent lost or stolen key cards from being able to operate the vehicle, see your dealer. Bring your remote key and digital key if you have the key card serviced at your dealer.

Each vehicle can have up to eight key cards programmed to it.

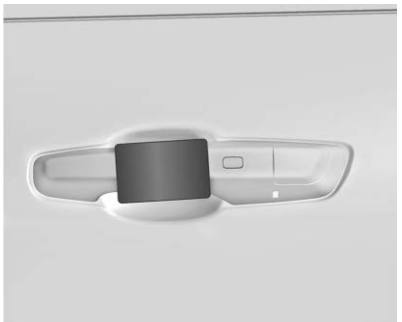

#### Unlocking with the Key Card

Tap your key card on the driver side door handle to unlock the driver door. To program the key card to unlock all doors, on the infotainment home screen, select Settings > Vehicle > Remote Lock, Unlock, Start > Remote Door Unlock.

#### Locking with the Key Card

With all doors closed, the vehicle off, and any door unlocked, tap your key card on the driver side door handle to lock all doors.

#### Starting with the Key Card

You can start your vehicle for a short period after unlocking it with your key card. If the period has ended, you will need to unlock the vehicle with the key card again to start your vehicle.

## Doors

### Liftgate

| ⚠ Warning |
| --- |
| Exhaust gases can enter the vehicle if it is driven with the liftgate or trunk/hatch open, or with any objects that pass through the seal between the body and the trunk/hatch or liftgate. Engine exhaust contains carbon monoxide (CO) which cannot be seen or smelled. It can cause unconsciousness and even death. |
| (Continued) |

NOT FOR RESALE



**Warning (Continued)**

If the vehicle must be driven with the liftgate or trunk/hatch open:

- Close all of the windows.
- Fully open the air outlets on or under the instrument panel.
- Adjust the climate control system to a setting that brings in only outside air and set the fan speed to the highest setting. See "Climate Control Systems" in the Index.
- If the vehicle is equipped with a power liftgate, disable the power liftgate function.

See *Engine Exhaust* ⇨ *180*.

**Caution**

To avoid damage to the liftgate or liftgate glass, make sure the area above and behind the liftgate is clear before opening it.

### Manual Liftgate Operation

If equipped with a manual liftgate, unlock the liftgate by pressing on the power door lock switch or press on the remote key twice within five seconds. See *Remote Key Operation* ⇨ *8*.



To open the liftgate, press the touch pad in the liftgate handle and lift up.

If equipped with Keyless Access, the liftgate can be opened when locked if the remote key is within 1 m (3 ft) of the liftgate. See *Remote Key Operation* ⇨ *8*.

Use the pull cup to lower and close the liftgate. Do not press the touch pad while closing the liftgate. This will cause the liftgate to be unlatched.

The liftgate has an electric latch. If the battery is disconnected or has low voltage, the liftgate will not open. The liftgate will resume operation when the battery is reconnected and charged.

Always close the liftgate before driving.

### Power Liftgate Operation

**⚠ Warning**

You or others could be injured if caught in the path of the power liftgate. Make sure there is no one in the way of the liftgate as it is opening and closing.

**Caution**

Driving with an open and unsecured liftgate may result in damage to the power liftgate components.

NOT FOR RESALE



| Caution |
| --- |
| Manually forcing the liftgate to open or close during a power cycle can damage the vehicle. Allow the power cycle to complete. |

**Power Liftgate Mode Selection**

To view available settings from the infotainment screen, touch Settings > Vehicle > Comfort and Convenience > Power Rear Gate Opening.

Choose from the following selections:

**Maximum:** Opens to the maximum height.

**Custom:** Opens to a reduced height that can be set between a programmed height and fully open. See "Setting the Custom Opening Height" later in this section.

Use to prevent the liftgate from opening into overhead obstructions, such as a garage door or roof-mounted cargo. The liftgate can be manually opened all the way.

**Off:** Opens manually only.

Select Maximum or Custom to power open or close the liftgate.

To open or close the liftgate:

- Press x2 twice quickly on the remote key until the liftgate moves.

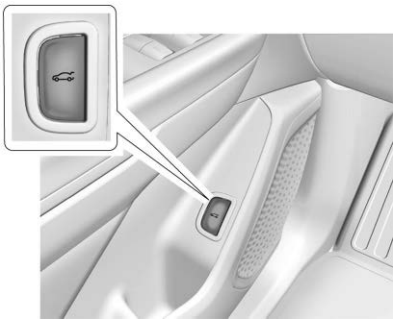

- Press on the driver door. The driver door must be unlocked.
- Press the touch pad in the liftgate handle after unlocking all doors to open the liftgate. A locked vehicle can be opened if the remote key is within 1 m (3 ft) of the liftgate.

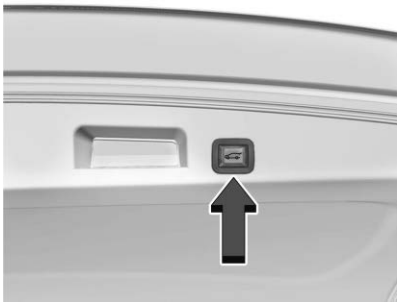

- Press on the bottom of the liftgate to close.

Press any liftgate button, the touch pad, or x2 on the remote key while the liftgate is moving to stop it. Pressing any liftgate button or pressing x2 twice quickly on the remote key restarts the operation in the reverse direction. Pressing the touch pad on the liftgate handle will restart the motion, but only in the opening direction.

The power liftgate may be temporarily disabled under extreme low temperatures, or after repeated power cycling over a short period of time. If this occurs, the liftgate can still be operated manually.

NOT FOR RESALE



If the vehicle is shifted out of P (Park) while the power function is in progress, the liftgate will continue to completion. If the vehicle is accelerated before the liftgate has completed moving, the liftgate may stop or reverse direction. Check for DIC messages and make sure the liftgate is closed and latched before driving.

### Falling Liftgate Detection

If the power liftgate automatically closes after a power opening cycle, it indicates that the system is reacting to excess weight on the liftgate or a possible support strut failure. A repetitive chime will sound while the falling liftgate detection feature is operating. Remove any excess weight. If the liftgate continues to automatically close after opening, see your dealer for service before using the power liftgate.

Interfering with the power liftgate motion or manually closing the liftgate too quickly after power opening may resemble a support strut failure. This could also activate the falling liftgate detection feature. Allow the liftgate to complete its operation and wait a few seconds before manually closing the liftgate.

## Obstacle Detection Features

If the liftgate encounters an obstacle during a power open or close cycle, the liftgate will automatically reverse direction and move a short distance away from the obstacle. After removing the obstruction, the power liftgate operation can be used again. If the liftgate encounters multiple obstacles on the same power cycle, the power function will deactivate. After removing the obstructions, manually close the liftgate which will allow normal power operation functions to resume.

If the vehicle is locked while the liftgate is closing, and an obstacle is encountered that prevents the liftgate from completely closing, the horn will sound as an alert that the liftgate did not close.

## Setting the Custom Opening Height

To change the position the liftgate stops at when opening:

1. Select MAX or Custom mode and power open the liftgate.
2. Stop the liftgate movement at the desired height by pressing any liftgate button. Manually adjust the liftgate position if needed.
3. Press and hold  on the bottom edge of the liftgate next to the latch on the outside of the liftgate until the turn signals flash and a chime sounds. This indicates the setting has been recorded.

The liftgate cannot be set below a minimum programmable height. If there is no light flash or sound, then the height adjustment may be too low.

## Hands-Free Operation

If equipped, the liftgate may be opened with a remote key by entering the authentication zone from outside the approach zone. Both zones are located near the rear of the vehicle.

Entering the authentication zone with the remote key will sound a notification and the taillights will flash. The liftgate will open automatically if the remote key remains in the authentication zone for several seconds.

NOT FOR RESALE



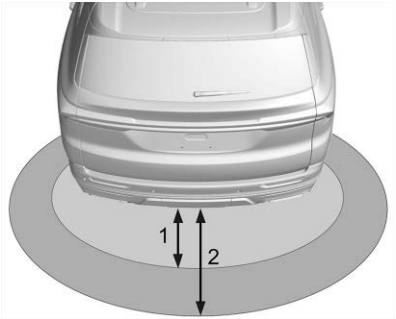


1. Authentication Zone (1 m (3 ft))
2. Approach Zone (3 m (9 ft))

To cancel the feature after entering the authentication zone, the user may step out of the authentication zone, press the exterior liftgate switch, or perform a single press of the button. The hands-free feature will not operate while the liftgate is moving. To stop the liftgate while in motion, use any of the liftgate switches.

The hands-free feature can be deactivated. To turn on or off, from the infotainment home screen, select Settings > Vehicle > Comfort and Convenience > Hands-Free Exterior Storage Access.

For some vehicles, this feature can be turned on and off using the exterior liftgate switch while the remote key is in the authentication zone. To do this, press and hold the switch for 5 seconds. Upon successfully enabling or disabling the feature using this method, the vehicle tail lights will flash.

**Troubleshooting Hands-Free Operation**

If there is a trailer attached to the vehicle but not connected to the electrical system, the Hands Free Liftgate will be disabled.

If the feature does not operate, the remote key may be in a muted state. Press any button on the remote key or any exterior vehicle switch to unmute the remote key.

The feature will be unavailable until the remote key has been out of the approach zone for longer than twenty seconds if any of the following occur:

- After successfully opening the liftgate using the hands-free feature.
- If the key enters the approach zone but does not enter the authentication zone within a short period of time.
- If the user has cancelled the feature by using the remote key liftgate button, the exterior liftgate switch, or stepping out of the authentication zone for more than a few seconds.

The hands-free feature will not be active under these conditions:

- The feature is set to OFF in Settings > Vehicle > Comfort and Convenience > Hands-Free Exterior Storage Access.
- If the vehicle is equipped with the side approach feature, this rear closure hands-free may not work when the rear doors are open due to conflict with other hands-free opening zones.
- Once you enter the approach zone, enter the authentication within 8 seconds for the system to function properly. If you miss this window, step out of the approach zone and wait for 20 seconds before attempting the hands-free operation again.
- Vehicle battery is low.
- Power Liftgate is set to OFF
- If Power Liftgate is later re-enabled, Hands-Free Opening will not automatically enable and must be re-enabled separately.

NOT FOR RESALE



- A remote key is inside the vehicle.
- The vehicle is not in P (Park).
- The vehicle remains parked for more than several days, with no remote key use or Keyless Access operation. To re-enable, press any button on the remote key or open and close any vehicle door.

# Vehicle Security

This vehicle has theft-deterrent features, but is not theft-proof.

## Vehicle Alarm System

This vehicle has an anti-theft alarm system.

The light, on the instrument panel near the windshield, indicates the status of the system.

**Off:** Alarm system is disarmed.

**On Solid:** Vehicle is secured during the delay to arm the system.

**Fast Flash:** Vehicle is unsecured. A door, the hood, or the rear access is open.

**Slow Flash:** Alarm system is armed.

### Arming the Alarm System

To arm the alarm system:

1. Turn off the vehicle.
2. Lock the vehicle in one of three ways:
   - Use the remote key.
   - Use the Keyless Access system.
   - With a door open, press the inside on the interior of the door.
   - If equipped, locking a door with a mechanical key will not arm the alarm system.
3. After 30 seconds the alarm system will arm, and the indicator light will begin to slowly flash. If equipped, press on the remote key a second time to bypass the 30-second delay and immediately arm the alarm system.

The alarm will be activated if a door, the rear access, or the hood is opened without first disarming the system. When the alarm is activated, the lights flash and the horn sounds. The alarm system will then re-arm to monitor for the next unauthorized event.

### Disarming the Alarm System

To disarm the alarm system or turn off the alarm if it has been activated:

- Press on the remote key.
- Unlock the vehicle using the Keyless Access system.
- Start the vehicle.

To avoid setting off the alarm by accident:

- Lock the vehicle after all occupants have exited.
- Always unlock a door with the remote key, or use the Keyless Access system.
- If equipped, if you open the driver door without first unlocking with the remote key, the horn will sound and the lights will flash to indicate pre-alarm. If you do not start or unlock the door by pressing on the remote key during the 10-second pre-alarm, the alarm will be activated.

### How to Detect a Tamper Condition

If you press on the remote key and the lights flash and horn sounds three times, an alarm occurred previously while the system was armed.

NOT FOR RESALE



If the alarm system has been activated, a message will appear on the Driver Information Center.

## Immobilizer Operation

This vehicle has a passive theft-deterrent system.

The system does not have to be manually armed or disarmed.

The vehicle is automatically immobilized when the remote key leaves the vehicle.

The immobilization system is disarmed when the ignition is turned on or in Accessory mode and a valid remote key is in the vehicle.



The security light, in the instrument cluster, comes on if there is a problem with arming or disarming the theft-deterrent system.

The system has one or more remote keys matched to an immobilizer control unit in the vehicle. Only a correctly matched remote key will start the vehicle. If the remote key is ever damaged, you may not be able to start the vehicle.

When trying to start the vehicle, the security light may come on briefly when the ignition is turned on.

If the engine does not start and the security light stays on, there is a problem with the system. Turn the ignition off and try again.

If the ignition will not change from off to on or accessory mode, and the remote key appears to be undamaged, try another remote key. Or, you may try placing the remote key in the backup location. See *Remote Key Operation* ⇨ *8*.

If the vehicle will not start with the other remote key, or with the remote key in the backup location, the vehicle needs service. If the vehicle does start, the first remote key may be faulty. See your dealer who can service the theft-deterrent system and have a new remote key programmed to the vehicle.

It is possible for the immobilizer system to learn new or replacement remote keys. Up to eight remote keys can be programmed to the vehicle. To program additional remote keys, see "Programming Remote Keys to the Vehicle" under *Remote Key Operation* ⇨ *8*.

Do not leave the remote key or device that disarms or deactivates the theft-deterrent system in the vehicle.

# Exterior Mirrors

## Convex Mirrors

**⚠ Warning**

A convex mirror can make things, like other vehicles, look farther away than they really are. If you cut too sharply into the right lane, you could hit a vehicle on the right. Check the inside mirror or glance over your shoulder before changing lanes.

The passenger side mirror is convex shaped. A convex mirror's surface is curved so more can be seen from the driver seat.

NOT FOR RESALE



## Power Mirrors

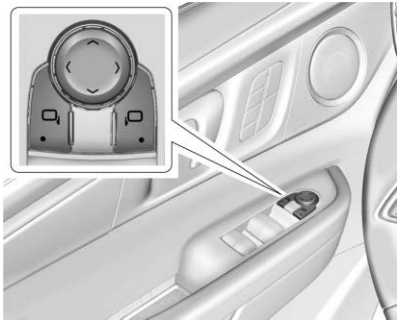

To adjust the mirrors:

1. Press or to choose the driver or passenger mirror.
2. Press the arrows on the control pad to move each mirror in the desired direction.

## Folding Mirrors

### Manual Folding Mirrors

The mirrors can be folded inward toward the vehicle to prevent damage when going through an automatic car wash. Push the mirror outward to return it to the original position.

### Memory Mirrors

The vehicle may have memory mirrors. See *Memory Seats* ⇨ *37*.

### Lane Change Alert (LCA)

The vehicle may have LCA. See *Lane Change Alert (LCA)* ⇨ *236*.

### Power Folding Mirrors

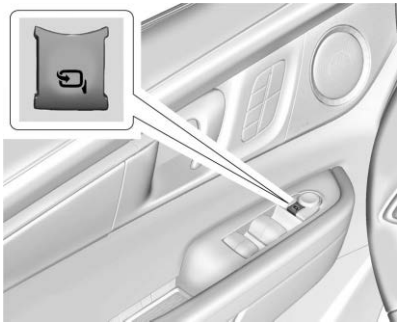

If equipped, press to power fold the mirrors. Press again to unfold.

### Resetting the Power Folding Mirrors

Reset the power folding mirrors if:

- The mirrors are accidentally obstructed while folding.
- They are accidentally manually folded/unfolded.
- The mirrors do not stay in the unfolded position.
- The mirrors vibrate at normal driving speeds.

Fold and unfold the mirrors one time using the mirror controls to reset them to their normal position. A noise may be heard during the resetting of the power folding mirrors. This sound is normal after a manual folding operation.

### Remote Mirror Folding

If equipped, press on the remote key to remotely fold the exterior mirrors. Press on the remote key to unfold. See *Remote Key Operation* ⇨ *8*.

If doors are locked by pressing the door handle button, the mirrors will fold. If doors are unlocked by pressing the door handle

NOT FOR RESALE



button, the mirrors will unfold. See “Keyless Unlocking/Locking from the Driver Door” in *Remote Key Operation* ⇨ *8*.

If passive locking is enabled and doors are locked by that feature, the mirrors will fold. See “Passive Locking” in *Remote Key Operation* ⇨ *8*.

This feature is turned on or off through vehicle settings. To view available settings from the infotainment home screen, touch Settings > Vehicle > Comfort and Convenience.

## Heated Mirrors

If equipped, the heated outside mirrors turn on when the rear window defogger is on and help to clear fog or frost from the surface of the mirrors.

: This button is on the climate control panel.

See “Rear Window Defogger” under *Dual Automatic Climate Control System* ⇨ *157*.

## Automatic Dimming Mirror

If equipped, the vehicle has an automatic dimming outside mirror on the driver side. The mirror will adjust for the glare of headlights behind you.

# Interior Mirrors

## Interior Rearview Mirrors

Adjust the rearview mirror for a clear view of the area behind your vehicle.

Do not spray glass cleaner directly on the mirror. Use a soft towel dampened with water.

## Manual Rearview Mirror

If equipped, push the tab forward for daytime use and pull it rearward for nighttime use to avoid glare of the headlights from behind.

## Automatic Dimming Rearview Mirror

If equipped, automatic dimming reduces the glare of headlights in the rearview mirror from a vehicle behind you. The dimming feature comes on when the vehicle is started.

## Rear Camera Mirror

**⚠ Warning**

The Rear Camera Mirror has a limited view. Portions of the road, vehicles, and other objects may not be seen. Do not drive or park the vehicle using only this camera. Objects may appear closer than they are. Check the outside mirrors or glance over your shoulder when making lane changes or merging. Failure to use proper care may result in injury, death, or vehicle damage.

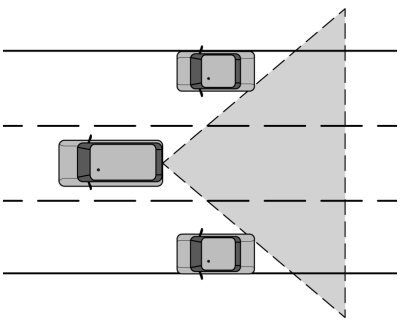

NOT FOR RESALE



If equipped, this automatic dimming mirror provides a wide angle camera view of the area behind the vehicle.

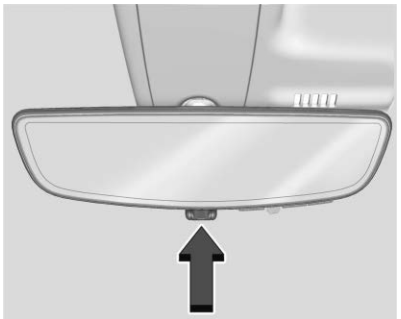

Pull the tab to turn on the display. Push the tab to turn it off. When off the mirror has automatic dimming. Adjust the mirror for a clear view of the area behind the vehicle while the display is off.

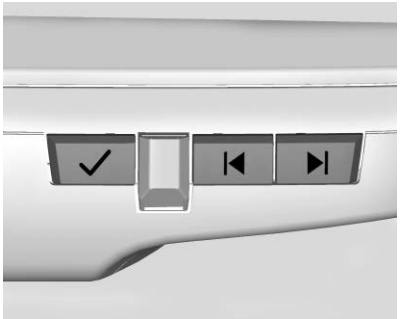

Press ✓ to scroll through the adjustment options.

Press ◀ and ▶ to adjust the settings using the indicators on the mirror. The indicators will remain visible for five seconds after the last button activation, and the settings will remain saved.

The adjustment options are:

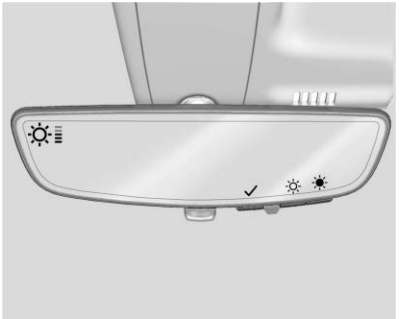

- Brightness



NOT FOR RESALE



- Zoom

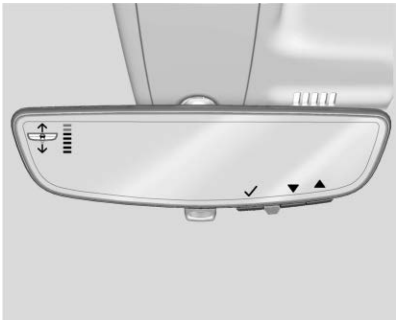

- Tilt

### Troubleshooting

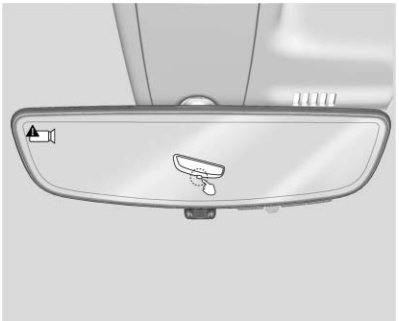

See your dealer for service if a blue screen and are displayed in the mirror, and the display shuts off. Also, push the tab as indicated to return to the automatic dimming mode.

The Rear Camera Mirror may not work properly or display a clear image if:

- There is glare from the sun or headlights. This may obstruct objects from view. If needed, push the tab to turn off the display.
- Dirt, snow, or other debris blocks the camera lens. Clean the lens with a soft damp cloth, or if equipped, with the Rear Camera Washer. See *Rear Window Wiper/Washer* ⇨ *92*.



- The camera's mounting on the vehicle has been damaged, and/or the position or the mounting angle of the camera has changed.

## Windows

**⚠ Warning**

Never leave a child, a helpless adult, or a pet alone in a vehicle, especially with the windows closed in warm or hot weather. They can be overcome by the extreme heat and suffer permanent injuries or even death from heat stroke.



NOT FOR RESALE



The vehicle aerodynamics are designed to improve fuel economy. This may result in a pulsing sound when either rear window is down and the front windows are up. To reduce the sound, open either a front window or the sunroof, if equipped.

## Power Windows

**⚠ Warning**

Children could be seriously injured or killed if caught in the path of a closing window. Never leave the remote key in a vehicle with children. When there are children in the rear seat, use the window lockout switch to prevent operation of the windows. See *Keys* ⇨ *7*.

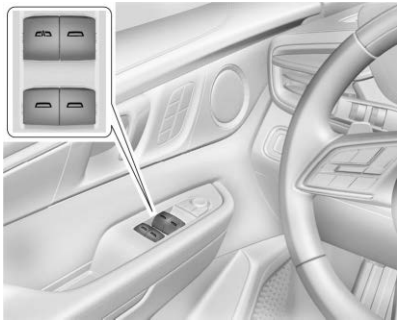

The power windows work when the vehicle is on, in accessory mode, or when Retained Accessory Power is active. See *Retained Accessory Power (RAP)* ⇨ *180*.

Using the window switch, press to open or pull to close the window.

The windows may be temporarily disabled if they are used repeatedly within a short time.

### Window Lockout

This feature prevents rear seat passengers from opening the rear windows.

If equipped, to enable or disable this feature from the infotainment home screen, select Controls > Power Window Lockout.

### Window Express Movement

This feature allows you to open all windows fully without holding the switches down. Press the switch down fully, then release to express open the window.

If equipped, pull the window switch up fully and quickly release to express close the window.

Briefly press or pull the window switch in the same direction to stop the window's express movement.

### Window Automatic Reversal System

If equipped, the window automatic reversal system reverses and stops window movement if it detects an object in its path. Extreme cold or ice may cause the window to auto-reverse. The window will operate normally after the object or condition is removed.

NOT FOR RESALE



### Automatic Reversal System Override

**⚠ Warning**

If automatic reversal system override is active, the window will not reverse automatically. You or others could be injured and the window could be damaged. Before using automatic reversal system override, make sure that all people and obstructions are clear of the window path.

If conditions prevent the window from closing, when the vehicle is on, override the automatic reversal system by pulling and holding the window switch.

### Programming the Power Windows

If the battery is disconnected or discharged, programming may be necessary. To program an express-close window:

1. Close all doors.
2. Turn the vehicle on.
3. Partially open the window you want to program, then close it and continue to pull the switch briefly after the window has fully closed.
4. Open the window and continue to press the switch briefly after the window has fully opened.

### Remote Window Operation

If equipped and enabled, this feature allows you to open all the windows remotely.

To view available settings and enable Remote Window Operation, from the infotainment home screen, touch Settings > Vehicle > Remote Lock, Unlock, Start.

To open the windows remotely, press twice and hold on the remote key. To close the driver window, use the window switch.

## Sun Visors

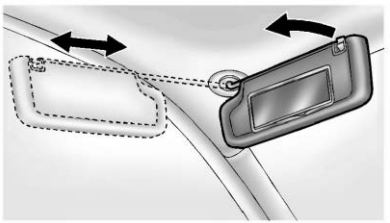

The driver and passenger sun visors block direct sunlight and reduce glare. If equipped, detach and pivot from the center mount to the side window, or extend along the rod for better coverage.

If equipped, swing the visor downward to access card holders or the vanity mirror.

# Roof

## Sunroof

If equipped, the ignition must be on or in accessory mode, or Retained Accessory Power must be active to operate the sunroof. See *Ignition Positions* ⇨ *176* and *Retained Accessory Power (RAP)* ⇨ *180*.

While the sunroof always operates in express mode, movement can be stopped by pressing the switch again.

The sunroof cannot be opened or closed if the vehicle has an electrical failure.

NOT FOR RESALE



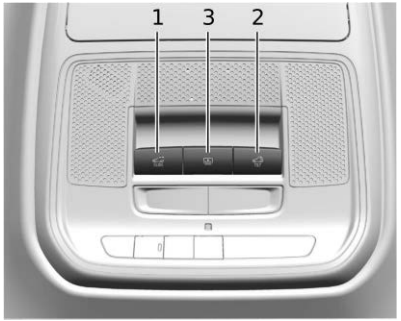


1. SLIDE Switch
2. TILT Switch
3. Power Sunshade Switch

**Sunroof Operation**

- Press and release SLIDE (1) to express-open to a partially opened comfort stop position.
- Press and release SLIDE (1) again to express-open the sunroof to the fully open position.
- Pull and release SLIDE (1) to express-close.
- To manually adjust the sunroof, press or pull and hold SLIDE (1) and release when the sunroof is at the desired position.

**Comfort Position**

For some models, wind noise is lowest when the sunroof is not fully open. For these models, the automatic operation will initially open the sunroof to a comfort position.

**Sunroof Vent Operation**

- Press and release TILT (2) to vent the sunroof.
- Pull and release TILT (2) to close the sunroof vent.

**Sunshade Operation**

- Press and release (3) to express-open.
- Pull and release (3) to express-close.
- Press or pull (3) again to stop at the desired location.

## Automatic Reversal System

The sunroof and power sunshade have an automatic reversal system that is only active when the sunroof and power sunshade are operated in express-close mode.

If an object is in the path while express-closing, the reversal system will detect an object, stop, and open the sunroof or power sunshade to a specified distance.

If frost or other conditions prevent closing, override the feature by closing the sunroof or power sunshade in manual mode. To stop movement, release the switch.

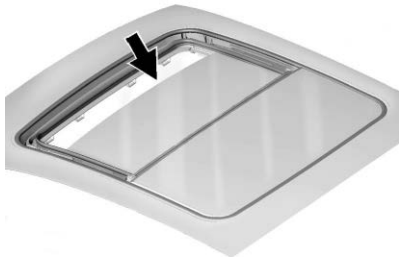

Dirt and debris may collect on the sunroof seal or in the track. This could cause an issue with sunroof operation or noise. It could also plug the water drainage system. Periodically open the sunroof and remove any obstacles or loose debris. Wipe the sunroof seal and roof sealing area using a clean cloth, mild soap, and water. Do not remove grease from the sunroof.

NOT FOR RESALE



# Seats and Restraints


**Head Restraints**
Head Restraints ..... 33

**Front Seats**
Power Seat Adjustment ..... 34
Reclining Seatbacks ..... 35
Lumbar Adjustment ..... 36
Massage ..... 36
Memory Seats ..... 37
Heated and Ventilated Front Seats ..... 39

**Rear Seats**
Rear Seat Reminder ..... 40
Second Row Seats ..... 40
Heated Rear Seats ..... 43
Third Row Seats ..... 44

**Seat Belts**
Seat Belts ..... 46
Buckle To Drive ..... 47
How to Wear Seat Belts Properly ..... 47
Lap-Shoulder Belt ..... 49
Seat Belt Use During Pregnancy ..... 52
Seat Belt Extender ..... 52
Safety System Check ..... 53
Seat Belt Care ..... 53
Replacing Seat Belt System Parts After a Crash ..... 53

**Airbag System**
Airbag System ..... 54
Where Are the Airbags? ..... 55
When Should an Airbag Inflate? ..... 56
What Makes an Airbag Inflate? ..... 57
How Does an Airbag Restrain? ..... 57
What Will You See After an Airbag Inflates? ..... 58
Passenger Sensing System ..... 59
Servicing the Airbag-Equipped Vehicle ..... 62
Adding Equipment to the Airbag-Equipped Vehicle ..... 63
Airbag System Check ..... 63
Replacing Airbag System Parts After a Crash ..... 64

**Child Restraints**
Older Children ..... 64
Infants and Young Children ..... 66
Child Restraint Systems ..... 68
Where to Put the Restraint ..... 70
Lower Anchors and Tethers for Children (LATCH System) ..... 72
Replacing LATCH System Parts After a Crash ..... 79
Securing Child Restraints (With the Seat Belt in the Rear Seat) ..... 79
Securing Child Restraints (With the Seat Belt in the Front Seat) ..... 81

NOT FOR RESALE



# Head Restraints

## Front Seats

**Warning**

With head restraints that are not installed and adjusted properly, there is a greater chance that occupants will suffer a neck/spinal injury in a crash. Do not drive until the head restraints for all occupants are installed and adjusted properly.

The front seats have adjustable head restraints in the outboard seating positions.



Adjust the head restraint so that the top of the restraint is at the same height as the top of the occupant's head. This position reduces the chance of a neck injury in a crash.

The height of the head restraint can be adjusted.

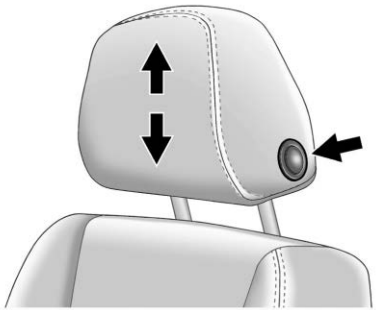

To raise or lower the head restraint, press the button located on the side of the head restraint, and pull up or push the head restraint down, and release the button. After releasing the button, ensure the head restraint locks in place and is unable to move up or down.

The front seat outboard head restraints are not removable.

## Rear Seats

### Second Row Seats

The second row seats have adjustable head restraints in the outboard seating positions.

The height of the head restraint can be adjusted. Pull the head restraint up to raise it. Try to move the head restraint to make sure that it is locked in place.



To lower the head restraint, press the button, located on the top of the seatback, and push the head restraint down. After releasing the button, ensure the head restraint locks in place and is unable to move up or down.

NOT FOR RESALE



Always adjust the head restraint so that the top of the restraint is at the same height as the top of the occupant's head.

The second row outboard head restraints are not removable.

**Third Row Seats**

The third row seats have head restraints in the outboard seating positions that cannot be adjusted up or down.

The third row outboard head restraints are designed to be folded.

The head restraint can be folded to allow for better visibility when the rear seat is unoccupied.

When folding the seatback down, the head restraint will automatically fold out of the way as the seat is folded down.

Return the lowered head restraint to the upright position until it locks into place. Push and pull on the head restraint to make sure it is locked.

When an occupant is in the seat, always return the head restraint to the upright position. Pull the head restraint up and push it rearward until it locks into place. Push and pull on the head restraint to make sure that it is locked.

The third row outboard head restraints are not removable.

The third row seats have adjustable head restraint in the center seating position.



The height of the head restraint can be adjusted. Pull the head restraint up to raise it. Try to move the head restraint to make sure that it is locked in place.

To lower the head restraint, press the button, located on the top of the seatback, and push the head restraint down. After releasing the button, ensure the head restraint locks in place and is unable to move up or down.

# Front Seats

## Power Seat Adjustment

**⚠ Warning**

You can lose control of the vehicle if you try to adjust a driver seat while the vehicle is moving. Adjust the driver seat only when the vehicle is not moving.

**⚠ Warning**

The power seats will work with the ignition off. Children could operate the power seats and be injured. Never leave children alone in the vehicle.

NOT FOR RESALE





To adjust the seat:

- Move the seat forward or rearward by sliding the control forward or rearward.
- If equipped, raise or lower the front part of the seat cushion by moving the front of the control up or down.
- Raise or lower the entire seat by moving the rear of the control up or down.

For vehicles not equipped with front cushion tilt, the front part of the control will raise and lower the seat.

To adjust the seatback, see *Reclining Seatbacks* ⇨ *35*.

To adjust the lumbar support, see *Lumbar Adjustment* ⇨ *36*.

## Reclining Seatbacks

**⚠ Warning**

Sitting in a reclined position when the vehicle is in motion can be dangerous.

Riding with the seatback reclined so that the seat belt is not resting against your body could cause neck, internal, or other serious injuries in a crash.

Always drive and ride with your seatback in the upright position, sit well back, and wear the seat belt properly.



Do not have a seatback reclined if the vehicle is moving.

### Power Reclining Seatbacks



NOT FOR RESALE



- Tilt the top of the control rearward to recline.
- Tilt the top of the control forward to raise.

## Lumbar Adjustment

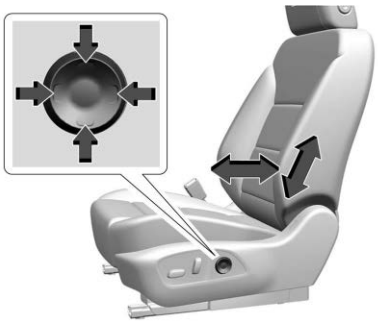

To adjust lumbar support, if equipped:

- Press and hold the front or rear of the control to increase or decrease lumbar support.
- Press and hold the top or bottom of the control to raise or lower lumbar support.

## Uplevel Seat Adjustment

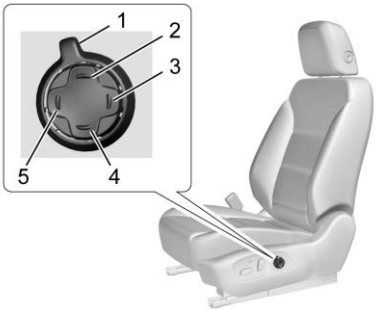


To adjust lumbar support, if equipped:

- Turn the Feature Select (1) to scroll to lumbar support on the infotainment display.
- Press and hold Forward (5) or Rearward (3) to adjust lumbar forward or rearward.
- Press and hold Up (2) or Down (4) to adjust lumbar up or down.

## Massage

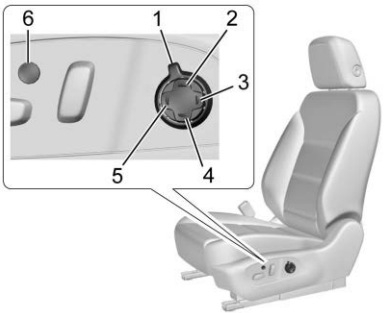


**Driver Seat Shown, Passenger Seat Similar**

If equipped, the vehicle must be on to use the massage feature.

To activate and adjust massage:

- Turn the Feature Select (1) to scroll to massage on the infotainment display.
- Press Up (2) or Down (4) to turn massage on or off.
- Press Forward (5) or Rearward (3) to adjust the intensity.

NOT FOR RESALE



- To turn massage off or to activate massage at last massage intensity settings, press the massage On/Off Control (6).

The massage feature will turn off after approximately 20 minutes. Press the massage On/Off Control (6) to restart the massage feature.

## Memory Seats

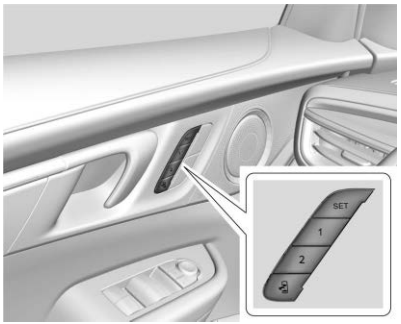


### Overview

If equipped, drivers can save their unique driving positions and a shared exit position using the memory seat feature.

If equipped, drivers can also save other feature position settings, such as the power mirrors, the power steering wheel, and Head-Up Display.

### Identifying Driver Number

The vehicle uses the remote key number 1 and 2 to identify the current driver. The Driver Information Center welcome message, "You are driver x for memory recalls," identifies the current remote key number. This message appears the first few times the vehicle is turned on with a different remote key. To ensure Seat Entry Memory works properly, save positions to the 1 or 2 memory button that match the driver number in the welcome message. To help identify remote key IDs, carry only one remote key when entering the vehicle. If the welcome message does not display, perform the following steps:

1. Move all remote keys away from the vehicle.
2. Start the vehicle with another remote key. A Driver Information Center welcome message should display indicating the driver number of the other remote key. Turn the vehicle off and remove the other remote key from the vehicle.
3. Start the vehicle with the initial remote key. The Driver Information Center welcome message should display the driver number of the initial remote key.

### Saving Seating Positions

Read these instructions completely before saving memory positions.

To save preferred driving positions to 1 and 2:

1. Turn the vehicle on or to accessory mode.
2. Adjust all available memory features to the desired driving position.
3. Press and release SET; an audible alert will sound. A Driver Information Center message may indicate to press memory button 1 or 2 to save seating position.
4. Immediately upon releasing SET, press and hold memory button 1 or 2 matching the current driver's remote key number until two audible alerts sound. If too much time passes between releasing SET and pressing 1 or 2, the two alerts will not sound indicating memory position were not saved. Repeat Steps 3 and 4 to try again.
5. Repeat Steps 1–4 for the other remote key 1 or 2 using the other 1 or 2 memory button.

NOT FOR RESALE



If you are the only driver, you can save the preferred driving positions to both 1 and 2.

To save the common exit seating position to that is used by all drivers for Manually Recalling Seating Positions and Auto Seat Exit Memory Recall features, repeat Steps 1–4 using , the exit button.

**Manually Recalling Seating Positions**

To recall the positions previously saved, press and hold 1, 2, or the button, until the recall is complete.

Manual Memory recall movement for 1, 2 or buttons may be initiated and will complete to the saved memory position if the vehicle is in or out of P (Park).

**Enabling Automatic Recalls**

- Seat Entry Memory moves the driver seat to the selected 1 or 2 position when the vehicle is started. Select Settings > Vehicle > Seating Position > Driver Seat Entry Memory > On or Off. See "Auto Seat Entry Memory Recall" later in this section.
- Seat Exit Memory moves the driver seat to the preferred exit position of the button when the vehicle is turned off and the door is opened. Select Settings > Vehicle > Seating Position >Driver Seat Exit Memory > On or Off. See "Auto Seat Exit Memory Recall" later in this section.
- The other feature position settings will be stored and recalled with memory seats.

**Auto Seat Entry Memory Recall**

Seat Entry Memory will automatically begin movement to the seating positions of the 1 or 2 button corresponding to the driver's remote key number 1 or 2 detected by the vehicle when:

- The vehicle is turned on.
- Seating positions have been previously saved to the same 1 or 2 button. See "Saving Seating Positions" previously in this section.
- Seat Entry Memory is enabled. See "Enabling Automatic Recalls" previously in this section.
- The vehicle is in P (Park).
- The other feature position settings will be stored and recalled with memory seats.

If the saved memory seat position does not automatically recall, verify the recall is enabled. See "Enabling Automatic Recalls" previously in this section.

If the memory seat recalls to the wrong position, the driver's remote key number 1 or 2 may not match the memory button number positions they were saved to. Try the other remote key or try saving the positions to the other 1 or 2 memory button. See "Saving Seating Positions" previously in this section.

Automatic Seat Entry Memory recalls are only available for driver's remote key numbers 1 and 2. Remote keys 3–8 will not provide Seat Entry Memory recalls.

**Auto Seat Exit Memory Recall**

Seat Exit Memory will begin movement to the seating position of the button when:

- The driver turns off the vehicle and opens the door within a short time.
- A seating position has previously been saved to the memory button. See "Saving Seating Positions" previously in this section.

NOT FOR RESALE



- Seat Exit Memory is enabled. See "Enabling Automatic Recalls" previously in this section.
- The vehicle is in P (Park)..

Seat Exit Memory is not linked to the driver's remote key. The seating position saved to is used for all drivers.

**Cancel Memory Seating Recalls**

- During any memory recall:

  Press a power seat control

  Press SET memory button

  Press the power mirror control pad

  Press the power tilt and telescoping steering wheel control switch
- During Manual memory recall:

  Release 1, 2, or memory button
- During Auto Seat Entry Memory Recall:

  Shift out of P (Park)

  Turn vehicle off

  Press SET, 1, 2, or memory buttons
- During Auto Seat Exit Memory Recall:

  Press SET, 1, 2, or memory buttons

**Obstructions**

If something has blocked the seat while recalling a memory position, the recall may stop. Remove the obstruction and try the recall again. If the memory position still does not recall, see your dealer.

## Heated and Ventilated Front Seats

**Warning**

If temperature change or pain to the skin cannot be felt, the seat heater may cause burns. To reduce the risk of burns, use care when using the seat heater, especially for long periods of time. Do not place anything on the seat that insulates against heat, such as a blanket, cushion, cover, or similar item. This may cause the seat heater to overheat. An overheated seat heater may cause a burn or may damage the seat.

If equipped, the heated and ventilated seat controls are in the climate bar on the infotainment screen. To operate, the engine must be running. Select or to turn the heated seats on or off.

If equipped, select or to ventilate the driver or passenger seat. A ventilated seat has a fan that circulates air through the seat. The air is not cooled.

When this feature is off, the icon is white. When a heated seat is turned on, the icon turns red. When a ventilated seat is turned on, the icon turns blue.

Select the icon once for the highest setting. With each selection, the seat will change to the next lower setting, and then to off. The indicator lights next to the icons indicate three for the highest setting and one for the lowest. If the heated seats are on high, the level may automatically be lowered after approximately 30 minutes.

The passenger seat may take longer to heat up.

**Auto Heated and Ventilated Seats**

If the vehicle is equipped with auto heated or ventilated seats, and the engine is running, this feature will automatically activate the heated or ventilated seats at the level required by the vehicle's interior temperature.

The active high, medium, low, or off heated or ventilated seat level will be indicated by the indicator lights on the infotainment screen. Use

NOT FOR RESALE



the heated or ventilated seat controls on the infotainment display to turn auto heated or ventilated seats off. If the passenger seat is unoccupied, the auto heated or ventilated seats feature will not activate that seat.

To enable or disable auto heated or ventilated seats, select Settings > Vehicle > Climate and Air Quality > Cooled/Ventilated Seats or Heated Seats on Startup> On or Off.

#### Remote Start Heated and Ventilated Seats

During a remote start, the heated or ventilated seats, if equipped, can be turned on automatically. When it is cold outside, the heated seats turn on, and when it is hot outside the ventilated seats turn on. If the auto heated or ventilated seats feature, if equipped, is not turned on, the heated or ventilated seats may be canceled when the vehicle is turned on. If necessary, operate the heated or ventilated seat controls to use the heated or ventilated seats after the vehicle is started. The heated or ventilated seat indicator lights may turn on during a remote start.

The temperature performance of an unoccupied seat may be reduced. This is normal.

To enable or disable remote start heated or ventilated seats, select Settings > Vehicle > Remote Lock, Unlock, and Start > Remote Start Auto Heated Seats or Remote Start Auto Cooled/Ventilated Seats > On or Off.

# Rear Seats

## Rear Seat Reminder

If equipped and enabled, the Driver Information Center displays a REAR SEAT REMINDER LOOK IN REAR SEAT message under certain circumstances. This message indicates there may be an item or passenger in the rear seat. Check the rear seat before exiting the vehicle.

Opening a second row door while the vehicle is on or up to 10 minutes before the vehicle is on, activates the feature. When the vehicle is turned off, the Driver Information Center message and an audible alert activate. The alert does not directly detect objects in the rear seat; instead, it detects when a rear door is opened and closed under certain conditions, indicating that there may be something in the rear seat.

The feature activates only once each time the vehicle is turned on and off. Reactivate it by opening and closing the second row doors. An alert may occur even when there is nothing in the rear seat; for example, if a child enters the vehicle through the rear door and leaves without the vehicle being shut off.

From the infotainment app screen, select Settings > Vehicle > Rear Seat Reminder to turn the feature on or off.

## Second Row Seats

### Rear Seat Adjustment

The second row seats slide forward for more room.



NOT FOR RESALE



To adjust the seat position:

1. Remove objects on the floor in front of or on the second row seat, or in the seat tracks on the floor.
2. Lift the lever below the seat cushion and slide the seat forward or backward.
3. Push and pull on the seatback to ensure the seat is locked in place.

### Entering and Exiting the Third Row

**⚠ Warning**

Using the third row seating position while the second row is folded, or folded and tumbled, could cause injury in a sudden stop or crash. Be sure to return the seat to the passenger seating position. Push and pull on the seat to make sure it is locked into place.

**⚠ Warning**

If the seatback and floor latches are not locked, the seat could move forward in a sudden stop or crash and injure the occupant. Always push and pull on the seatbacks to be sure the seatback and floor latches are locked.

**⚠ Warning**

Folding a rear seat with the seat belts still fastened may cause damage to the seat or the seat belts. Always unbuckle the seat belts and return them to their normal stowed position before folding a rear seat.

To access the third row from the driver or passenger side:

1. Remove objects on the floor in front of or on the second row seat, or in the seat tracks on the floor.
2. Make sure that the seat belt is unfastened and in the stowed position.

**⚠ Warning**

Remove the child from the child restraint before moving the seat forward for third row entry or exit. Failure to do so may result in injury to the child.

3. Remove a child restraint before moving the seat for third row entry or exit when there's a child restraint installed on seat.

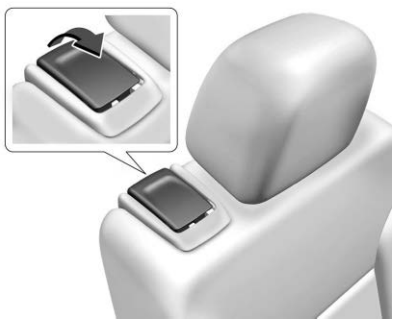

4. Release the top handle. (The seatback will tip forward).

NOT FOR RESALE



4.1 Push the top corner of the upper seatback to tip the seat further forward until it starts sliding along the track.

**Power Rear Seats**

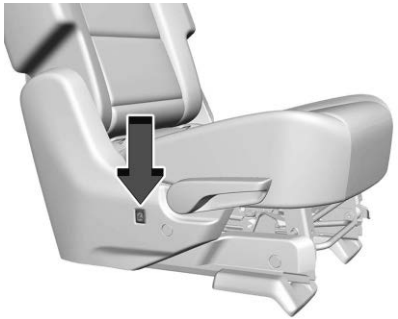



If equipped with power rear seats, the second row seat can also be moved for third row entry/exit by pressing the switch on the second row seat side or on the seatback of the second row seat.

### Returning the Seat to the Seating Position

To return the second row seat to its normal seating position:

1. Remove objects on the floor behind the second row seat or in the seat tracks on the floor.
2. Push on the seatback until the seat is locked into place.
3. Push and pull on the seatback and seat cushion to make sure they are locked in place.
4. Check that the seat belt is not under the seat cushion.

### Reclining the Seatbacks

To recline the seatbacks:



1. Leaning rearward in the seat, pull the reclining seatback lever.
2. Move the seatback to the desired position, and then release the lever to lock the seatback in place.
3. Push and pull on the seatback to make sure it is locked.

NOT FOR RESALE



### Folding the Seatbacks



To fold the second row seatbacks:

1. Remove anything on or under the seat.
2. Pull up on the reclining seatback lever.

To return the seatback to the seating position, lift the seatback and push it rearward until it locks into place. Push and pull on the seatback to make sure it is locked.

### Folding the Second Row Seatbacks from the Cargo Area

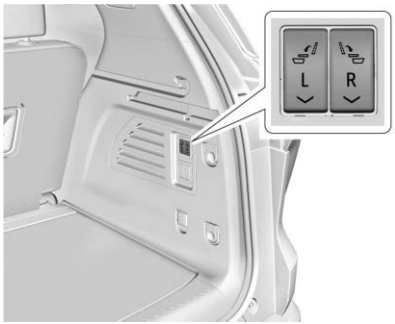


If equipped, press the switch on the side trim of the cargo area to fold the second row seatback. The left switch folds the left seatback, and the right switch folds the right seatback.

There are additional switches which can be used to fold the third row seatbacks from the cargo area. See *Third Row Seats* ⇨ *44*.

## Heated Rear Seats

**⚠ Warning**

If temperature change or pain to the skin cannot be felt, the seat heater may cause burns. See the Warning under *Heated and Ventilated Front Seats* ⇨ *39*.



If equipped, the buttons are on the rear of the center console.

With the engine running, press or to heat the left or right outboard seat cushion. An indicator light on the button will turn on when the heated seat is on.

NOT FOR RESALE



This feature turns on at the highest setting. With each press of the button, the heated seat changes to the next lower setting, and then the off setting. Three lights indicate the highest setting, and one light indicates the lowest.

If the heated seats are on high, the level may automatically be lowered after approximately 30 minutes.

#### Remote Start Heated Seats

During a remote start, the heated seats, if equipped, can be turned on automatically. When it is cold outside, the heated seats turn on. The heated seats will be canceled when the vehicle is turned on. If necessary, operate the heated seat controls to use the heated seats after the vehicle is started.

The temperature performance of an unoccupied seat may be reduced. This is normal.

To enable or disable remote start heated seats, select Settings > Vehicle > Remote Lock, Unlock, and Start > Remote Start Auto Heated Seats > On or Off.

## Third Row Seats

**⚠ Warning**

Using the third row seating position while the second row is folded, or pushed forward in the entry position, could cause injury in a sudden stop or crash. Be sure to return the seat to the passenger seating position. Push and pull on the seat to make sure it is locked into place.

### Folding the Seatback

**⚠ Warning**

Folding a rear seat with the seat belts still fastened may cause damage to the seat or the seat belts. Always unbuckle the seat belts and return them to their normal stowed position before folding a rear seat.

To fold the third row seatback:

1. Remove objects on the floor in front of or on the second row seat, or in the seat tracks on the floor.
2. If the second row seat is in the full rear position, adjust it forward to allow the third row seat to fold fully flat.
3. Remove anything on or under the seat.

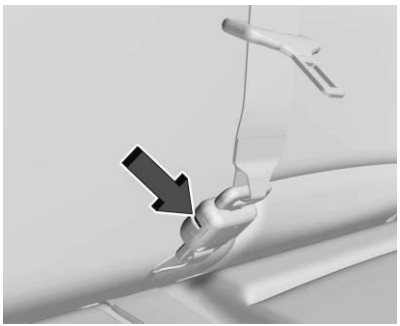

4. Disconnect the center seat belt mini-latch, using a key in the slot on the mini-buckle, and let the belt retract into the headliner.

NOT FOR RESALE



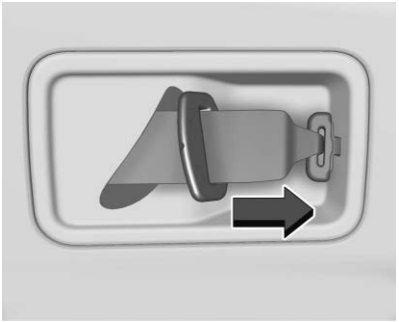

5. Stow the mini-latch in the holder in the headliner.

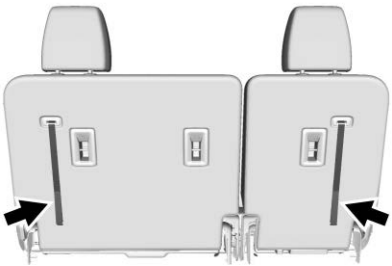

6. Pull the release strap located on the seatback.
7. Push the seatback forward to lay flat.
8. Repeat for the other seatback, if necessary.

### Returning the Seat to the Seating Position

To return the seatback to the seating position:

1. From the rear of the vehicle, raise the seatback to the upright position using the pull strap on the back of the third row seat, or lift the seatback and push it into place from inside the vehicle.

**⚠ Warning**

If either seatback is not locked, it could move forward in a sudden stop or crash. That could cause injury to the person sitting there. Always push and pull on the seatbacks to be sure they are locked.

2. Push and pull on the seatback to make sure it is locked in place.

**⚠ Warning**

A seat belt that is improperly routed, not properly attached, or twisted will not provide the protection needed in a crash. The person wearing the belt could be seriously injured. After raising the rear seatback, always check to be sure that the seat belts are properly routed and attached, and are not twisted.

3. Reconnect the center seat belt mini-latch to the mini-buckle. Do not let it twist.
4. Pull on the seat belt to be sure the mini-latch is secure.

NOT FOR RESALE



### Power Seatback Folding




If equipped, the third row seatbacks can also be folded forward and returned to the upright position by pressing and holding the switches on the passenger side of the rear cargo area.

## Seat Belts

This section describes how to use seat belts properly, and some things not to do.

**⚠ Warning**

Do not let anyone ride where a seat belt cannot be worn properly. In a crash, if you or your passenger(s) are not wearing seat belts, injuries can be much worse than if you are wearing seat belts. You can be seriously injured or killed by hitting things inside the vehicle harder or by being ejected from the vehicle. In addition, anyone who is not buckled up can strike other passengers in the vehicle.

It is extremely dangerous to ride in a cargo area, inside or outside of a vehicle. In a collision, passengers riding in these areas are more likely to be seriously injured or killed. Do not allow passengers to ride in any area of the vehicle that is not equipped with seats and seat belts.

Always wear a seat belt, and check that all passenger(s) are restrained properly too.

This vehicle has indicators as a reminder to buckle the seat belts. See *Seat Belt Reminders* ⇨ *100*.

### Why Seat Belts Work

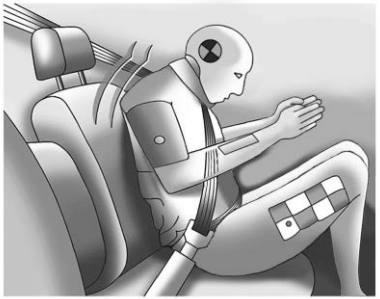

When riding in a vehicle, you travel as fast as the vehicle does. If the vehicle stops suddenly, you keep going until something stops you. It could be the windshield, the instrument panel, or the seat belts!

When you wear a seat belt, you and the vehicle slow down together. There is more time to stop because you stop over a longer distance, and when worn properly, your strongest bones take the forces from the seat belts. That is why wearing seat belts makes such good sense.

NOT FOR RESALE



### Questions and Answers About Seat Belts

**Q: Will I be trapped in the vehicle after a crash if I am wearing a seat belt?**

**A:** You *could* be — whether you are wearing a seat belt or not. Your chance of being conscious during and after a crash, so you *can* unbuckle and get out, is *much* greater if you are belted.

**Q: If my vehicle has airbags, why should I have to wear seat belts?**

**A:** Airbags are supplemental systems only. They work *with* seat belts — not instead of them. Whether or not an airbag is provided, all occupants still have to buckle up to get the most protection.

Also, in nearly all states and in all Canadian provinces, the law requires wearing seat belts.

## Buckle To Drive

If equipped, this feature delays the vehicle from shifting out of P (Park) when the driver seat belt is not buckled. The Buckle to Drive feature must be turned ON in the infotainment system to work. To turn the Buckle to Drive feature on or off, select Settings > Vehicle > Buckle to Drive. See *Teen Driver* ⇨ *151*, if equipped.

If the vehicle is on and the brake pedal is pressed with the vehicle in P (Park) but the driver seat belt is not buckled, a message displays in the Driver Information Center and the vehicle will be delayed from shifting out of P (Park). Buckle the driver seat belt to clear the message and shift out of P (Park). Shifting from P (Park) will be delayed once for each time the vehicle is started.

On some models, Buckle to Drive may also delay shifting out of P (Park) if a front passenger seat belt is unbuckled. A message displays in the Driver Information Center. Buckle the front passenger seat belt to shift out of P (Park). This feature may delay the vehicle from shifting out of P (Park) if an object, such as a briefcase, handbag, grocery bag, laptop, or other electronic device, is on the front passenger seat. If this happens, remove the object from the seat or buckle the seat belt to shift out of P (Park).

If the driver, or on some vehicles, the present front passenger remains unbuckled, the Driver Information Center message will turn off after several seconds and the vehicle can be shifted out of P (Park). See “Seat Belts” and “Child Restraints” in the Index for information about the importance of proper restraint use.

If the driver seat belt or the front passenger seat belt is unbuckled when driving, the seat belt reminder audible alert and light(s) will come on. See *Seat Belt Reminders* ⇨ *100*. This feature may not function properly if the airbag readiness light is on. See *Airbag Readiness Light* ⇨ *101*.

## How to Wear Seat Belts Properly

Follow these rules for everyone's protection.

There are additional things to know about seat belts and children, including smaller children and infants. If a child will be riding in the vehicle, see *Older Children* ⇨ *64* or *Infants and Young Children* ⇨ *66*. Review and follow the rules for children in addition to the following rules.

It is very important for all occupants to buckle up. Statistics show that unbelted people are hurt more often in crashes than those who are wearing seat belts.

There are important things to know about wearing a seat belt properly.

NOT FOR RESALE



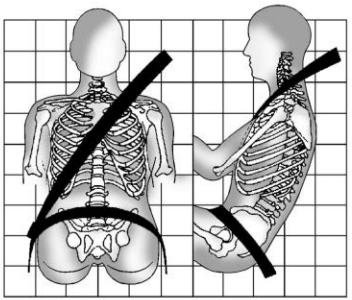

- Sit up straight and always keep your feet on the floor in front of you (if possible).
- Wear the lap part of the belt low and snug on the hips, just touching the thighs. In a crash, this applies force to the strong pelvic bones and you would be less likely to slide under the lap belt. If you slid under it, the belt would apply force on your abdomen. This could cause serious or even fatal injuries.
- Wear the shoulder belt over the shoulder and across the chest. These parts of the body are best able to take belt restraining forces. The shoulder belt locks if there is a sudden stop or crash.

**⚠ Warning**

You can be seriously injured, or even killed, by not wearing your seat belt properly.

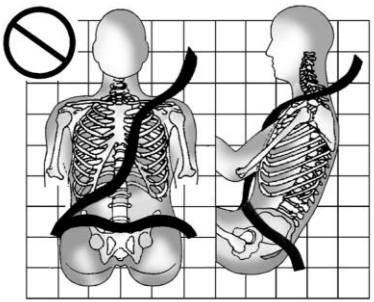

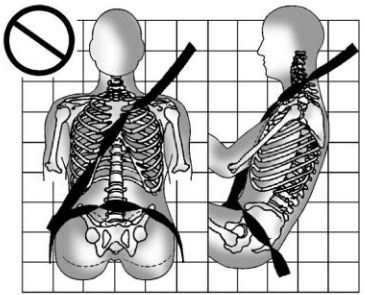

Never allow the lap or shoulder belt to become loose or twisted.

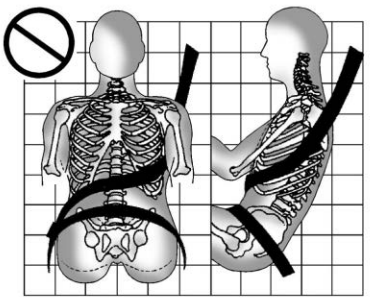

NOT FOR RESALE



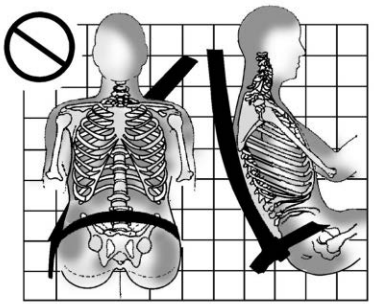

Never wear the shoulder belt under both arms or behind your back.

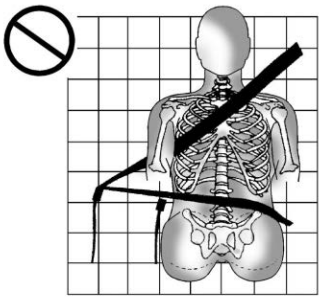

Always use the correct buckle for your seating position.

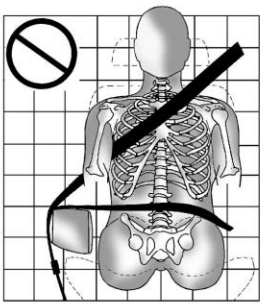

Never route the lap or shoulder belt over an armrest.

**⚠ Warning**

The seat belt can be pinched if it is routed under plastic trim on the seat, such as trim around the rear seatback folding handle or side airbag. In a crash, pinched seat belts might not provide adequate protection. Never allow seat belts to be routed under plastic trim pieces.

**⚠ Warning**

You can be seriously injured or killed if the shoulder belt is worn behind your back, under your legs, or wrapped around your neck. The shoulder belt can tighten but cannot be loosened if it is locked. The shoulder belt locks when it is pulled all the way out of the retractor. It unlocks when the shoulder belt is allowed to go all the way back into the retractor, but it cannot do this if it is wrapped around you. You may have to cut the seat belt if it is locked and tightened around you.

## Lap-Shoulder Belt

All seating positions in the vehicle have a lap-shoulder belt.

If you are using a rear seating position with a detachable seat belt and the seat belt is not attached, see *Third Row Seats* ⇨ *44* for instructions on reconnecting the seat belt to the mini-buckle.

The following instructions explain how to wear a lap-shoulder belt properly.

NOT FOR RESALE



1. Adjust the seat, if the seat is adjustable, so you can sit up straight. To see how, see “Seats” in the Index.

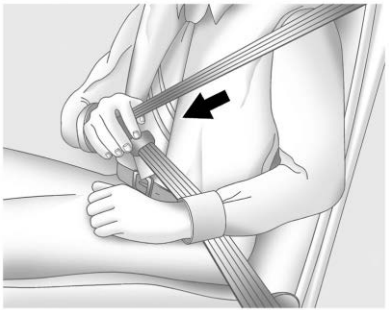

2. Pick up the latch plate and pull the belt across you. Do not let it get twisted.

   The lap-shoulder belt may lock if you pull the belt across you very quickly. If this happens, let the belt go back slightly to unlock it. Then pull the belt across you more slowly.

   If the shoulder portion of a passenger belt is pulled out all the way, the child restraint locking feature may be engaged. See *Child Restraint Systems* ⇨ *68*. If this occurs, let the belt go back all the way and start again.

   If the locking feature stays engaged after letting the belt go back to stowed position on the seat, move the seat rearward or recline the seat until the shoulder belt retractor lock releases.

   Engaging the child restraint locking feature in the front outboard seating position may affect the passenger sensing system. See *Passenger Sensing System* ⇨ *59*.



   If the webbing locks in the latch plate before it reaches the buckle, tilt the latch plate flat to unlock.

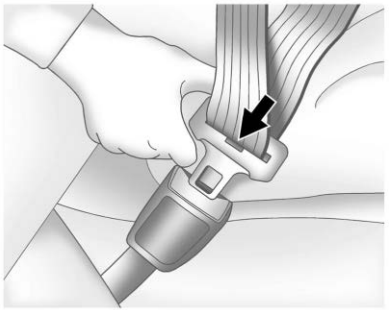

3. Push the latch plate into the buckle until it clicks.

   Pull up on the latch plate to make sure it is secure. If the belt is not long enough, see *Seat Belt Extender* ⇨ *52*.

   Position the release pushbutton on the buckle so that the seat belt could be quickly unbuckled if necessary.

   If equipped with a shoulder belt height adjuster, move it to the height that is right for you. See "Shoulder Belt Height Adjuster" later in this section for instructions on use and important safety information.

NOT FOR RESALE



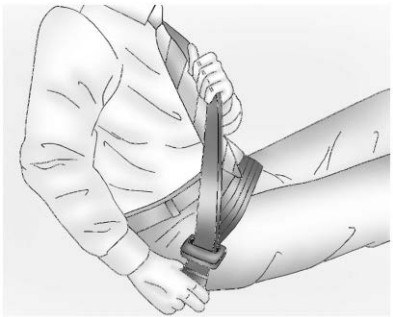

4. To make the lap part tight, pull up on the shoulder belt.

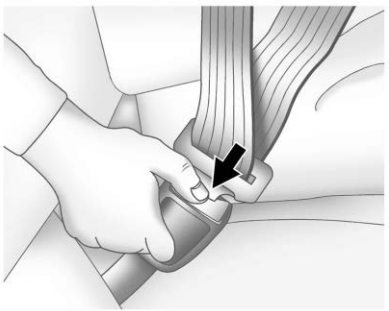

To unlatch the belt, push the release pushbutton on the buckle. The belt should return to its stowed position.

Always stow the seat belt slowly. If the seat belt webbing returns quickly to the stowed position, the retractor may lock and cannot be pulled out. If this happens, pull the seat belt straight out firmly to unlock the webbing, and then release it. If the webbing is still locked in the retractor, see your dealer.

Before a door is closed, be sure the seat belt is out of the way. If a door is slammed against a seat belt, damage can occur to both the seat belt and the vehicle.

### Shoulder Belt Height Adjuster

The vehicle has a shoulder belt height adjuster for the driver and front outboard passenger seating positions.

Adjust the height so that the shoulder portion of the belt is on the shoulder and not falling off of it. The belt should be close to, but not contacting, the neck. Improper shoulder belt height adjustment could reduce the effectiveness of the seat belt in a crash. See *How to Wear Seat Belts Properly* ⇨ 47.

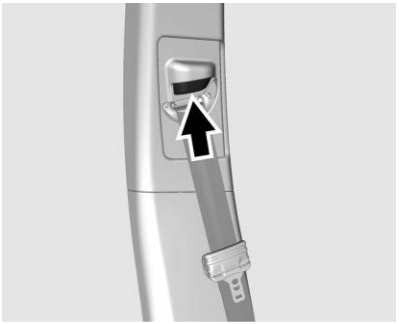

Press and hold the release button while raising or lowering the height adjuster to the desired position.

After the height adjuster is set to the desired position, try to move it down without pressing the release button to make sure it has locked into position.

### Seat Belt Pretensioners

This vehicle has seat belt pretensioners for the front row and second row outboard occupants. Although the seat belt pretensioners cannot be seen, they are part of the seat belt assembly. They can help tighten the seat belts during the early stages of a moderate to severe frontal, near frontal, or rear crash if the threshold

NOT FOR RESALE



conditions for pretensioner activation are met. Seat belt pretensioners can also help tighten the seat belts in a side crash or a rollover event.

Pretensioners work only once. If the pretensioners activate in a crash, the pretensioners and probably other parts of the vehicle seat belt system will need to be replaced. See *Replacing Seat Belt System Parts After a Crash* ⇨ *53*.

Do not sit on the outboard seat belt while entering or exiting the vehicle or at any time while sitting in the seat. Sitting on the seat belt can damage the webbing and hardware.

### Rear Seat Belt Comfort Guides

Rear seat belt comfort guides may provide added seat belt comfort for older children who have outgrown booster seats and for some adults. When installed on a shoulder belt, the comfort guide positions the shoulder belt away from the neck and head.

Comfort guides are available through your dealer for the rear outboard seating positions. Instructions are included with the guides.

## Seat Belt Use During Pregnancy

Seat belts work for everyone, including pregnant women. Like all occupants, they are more likely to be seriously injured if they do not wear seat belts.



A pregnant woman should wear a lap-shoulder belt, and the lap portion should be worn as low as possible, below the rounding, throughout the pregnancy.

The best way to protect the fetus is to protect the mother. When a seat belt is worn properly, it is more likely that the fetus will not be hurt in a crash. For pregnant women, as for anyone, the key to making seat belts effective is wearing them properly.

## Seat Belt Extender

**⚠ Warning**

Using a seat belt extender incorrectly can affect certain vehicle safety alerts and systems, potentially leading to unexpected vehicle movement. Always unfasten the seat belt by pushing on the vehicle-mounted buckle release button. Only use the extender-mounted release button to remove the extender after you are done using it. Follow all instructions that come with the seat belt extender.

If the vehicle seat belt will fasten around you, you should use it.

But if a seat belt is not long enough, your dealer will order you an extender. Only a genuine GM issued extender should be used. When you go in to order it, take the heaviest coat you will wear, so the extender will be long enough for you. To help avoid personal injury, do not let someone else use it, and use it only for the seat it is made to fit. The extender has been designed for adults. Never use it for securing

NOT FOR RESALE



child restraints. For more information on the proper use and fit of seat belt extenders, see the instruction sheet that comes with the extender.

## Safety System Check

Periodically check the seat belt reminder, seat belts, buckles, latch plates, retractors, shoulder belt height adjusters (if equipped), and seat belt anchorages to make sure they are all in working order. Look for any other loose or damaged seat belt system parts that might keep a seat belt system from performing properly. See your dealer to have it repaired. Torn, frayed, or twisted seat belts may not protect you in a crash. Torn or frayed seat belts can rip apart under impact forces. If a belt is torn or frayed, have it replaced immediately. If a belt is twisted, it may be possible to untwist by reversing the latch plate on the webbing. If the twist cannot be corrected, ask your dealer to fix it.

Make sure the seat belt reminder light is working. See *Seat Belt Reminders* ⇨ *100*.

Keep seat belts clean and dry. See *Seat Belt Care* ⇨ *53*.

## Seat Belt Care

Keep belts clean and dry.

**⚠ Warning**

Do not bleach or dye seat belt webbing. It may severely weaken the webbing. In a crash, they might not be able to provide adequate protection. Clean and rinse seat belt webbing only with mild soap and lukewarm water. Allow the webbing to dry.

Seat belts should be properly cared for and maintained.

Seat belt hardware should be kept dry and free of dust or debris. As necessary exterior hard surfaces and seat belt webbing may be lightly cleaned with mild soap and water. Ensure there is not excessive dust or debris in the mechanism. If dust or debris exists in the system after proper cleaning please see the dealer. Parts may need to be replaced to ensure proper functionality of the system.

## Replacing Seat Belt System Parts After a Crash

**⚠ Warning**

A crash can damage the seat belt system in the vehicle. A damaged seat belt system may not properly protect the person using it, resulting in serious injury or even death in a crash. To help make sure the seat belt systems are working properly after a crash, have them inspected and any necessary replacements made as soon as possible.

After a minor crash, replacement of seat belts may not be necessary. But the seat belt assemblies that were used during any crash may have been stressed or damaged. See your dealer to have the seat belt assemblies inspected or replaced.

New parts and repairs may be necessary even if the seat belt system was not being used at the time of the crash.

NOT FOR RESALE



Have the seat belt pretensioners checked if the vehicle has been in a crash, or if the airbag readiness light stays on after you start the vehicle or while you are driving. See *Airbag Readiness Light* ⇨ *101*.

## Airbag System

Here are the most important things to know about the airbag system:

The vehicle has the following airbags:

**⚠ Warning**

You can be severely injured or killed in a crash if you are not wearing your seat belt, even with airbags. Airbags are designed to work with seat belts, not replace them. Also, airbags are not designed to inflate in every crash. In some crashes seat belts are the only restraint. See *When Should an Airbag Inflate?* ⇨ *56*.

Wearing your seat belt during a crash helps reduce your chance of hitting things inside the vehicle or being ejected from it. Airbags are "supplemental restraints" to the seat

(Continued)

**Warning (Continued)**

belts. Everyone in the vehicle should wear a seat belt properly, whether or not there is an airbag for that person.

**⚠ Warning**

Because airbags inflate with great force and faster than the blink of an eye, anyone who is up against, or very close to any airbag when it inflates can be seriously injured or killed. Do not sit unnecessarily close to any airbag, as you would be if sitting on the edge of the seat or leaning forward. Seat belts help keep you in position before and during a crash. Always wear a seat belt, even with airbags. The driver should sit as far back as possible while still maintaining control of the vehicle. The seat belts and the front outboard passenger airbags are most effective when you are sitting well back and upright in the seat with both feet on the floor.

(Continued)

**Warning (Continued)**

Occupants should not lean on or sleep against the front center armrest or console in vehicles with a front center airbag.

Occupants should not lean on or sleep against the door or side windows in seating positions with seat-mounted side impact airbags and/or roof-rail airbags.

**⚠ Warning**

Children who are up against, or very close to, any airbag when it inflates can be seriously injured or killed. Always secure children properly in the vehicle. To read how, see *Older Children* ⇨ *64* or *Infants and Young Children* ⇨ *66*.

- A frontal airbag for the driver
- A frontal airbag for the front outboard passenger
- A front center airbag for the driver and front outboard passenger
- A seat-mounted side impact airbag for the driver

NOT FOR RESALE



- A seat-mounted side impact airbag for the front outboard passenger
- A roof-rail airbag for the driver and for the second and third row passengers seated directly behind the driver
- A roof-rail airbag for the front outboard passenger and the second and third row passengers seated directly behind the front outboard passenger

All vehicle airbags have the word AIRBAG on the trim or on a label near the deployment opening.

For frontal airbags, the word AIRBAG is on the center of the steering wheel for the driver and on the instrument panel for the front outboard passenger.

For the front center airbag, the word AIRBAG is on the inboard side of the driver seatback.

For seat-mounted side impact airbags, the word AIRBAG is on the side of the seatback or side of the seat closest to the door.

For roof-rail airbags, the word AIRBAG is on the ceiling or trim.

Airbags are designed to supplement the protection provided by seat belts. Even though today's airbags are also designed to help reduce the risk of injury from the force of an inflating bag, all airbags must inflate very quickly to do their job.



There is an airbag readiness light on the instrument cluster, which shows the airbag symbol.

The system checks the airbag electrical system for malfunctions. The light tells you if there is an electrical problem. See *Airbag Readiness Light* ⇨ *101*.

## Where Are the Airbags?

**⚠ Warning**

If something is between an occupant and an airbag, the airbag might not inflate properly or it might force the object into that person causing severe injury or even death. The path of an inflating airbag

(Continued)

**Warning (Continued)**

must be kept clear. Do not put anything between an occupant and an airbag, and do not attach or put anything on the steering wheel hub or on or near any other airbag covering.

Do not use seat or console accessories that block the inflation path of a seat-mounted side impact airbag or the front center airbag.

Never secure anything to the roof of a vehicle with roof-rail airbags by routing a rope or tie-down through any door or window opening. If you do, the path of an inflating roof-rail airbag will be blocked.

NOT FOR RESALE



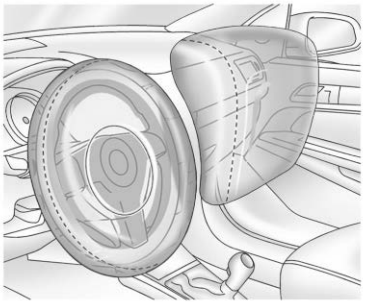

The driver frontal airbag is in the center of the steering wheel.

The front outboard passenger frontal airbag is in the passenger side instrument panel.



The front center airbag is in the inboard side of the driver seatback.



**Driver Side Shown, Passenger Side Similar**

The driver and front outboard passenger seat-mounted side impact airbags are in the side of the seatbacks closest to the door.



**Driver Side Shown, Passenger Side Similar**

The roof-rail airbags for the driver, front outboard passenger, and second and third row outboard passengers are in the ceiling above the side windows.

## When Should an Airbag Inflate?

This vehicle is equipped with airbags. See *Airbag System* ⇨ *54*. Airbags are designed to inflate if the impact exceeds the specific airbag system's deployment threshold. Deployment thresholds are used to predict how severe a crash is likely to be in time for the airbags to inflate and help restrain the occupants. The vehicle has electronic sensors that help the

NOT FOR RESALE



airbag system determine the severity of the impact. Deployment thresholds can vary with specific vehicle design.

Frontal airbags are designed to inflate in moderate to severe frontal crashes to help reduce the potential for severe injuries, mainly to the driver's or front outboard passenger's head and chest.

Whether the frontal airbags will or should inflate is not based primarily on how fast the vehicle is traveling. It depends on what is hit, the direction of the impact, and how quickly the vehicle slows down.

Frontal airbags may inflate at different crash speeds depending on whether the vehicle hits an object straight on or at an angle, and whether the object is fixed or moving, rigid or deformable, narrow or wide.

Frontal airbags are not intended to inflate during vehicle rollovers, in rear impacts, or in many side impacts.

In addition, the vehicle has advanced technology frontal airbags. Advanced technology frontal airbags adjust the restraint according to either crash severity or occupant interaction.

The front center airbag is designed to inflate in moderate to severe side crashes depending upon the location of the impact, when either side of the vehicle is struck. In addition, the front center airbag is designed to inflate when the sensing system predicts that the vehicle is about to roll over on its side. The front center airbag is not designed to inflate in frontal impacts, near frontal impacts, or rear impacts.

Seat-mounted side impact airbags are designed to inflate in moderate to severe side crashes depending on the location of the impact. These airbags may also inflate in some moderate to severe frontal impacts. Seat-mounted side impact airbags are not designed to inflate in rollovers or rear impacts. A seat-mounted side impact airbag is designed to inflate on the side of the vehicle that is struck.

Roof-rail airbags are designed to inflate in moderate to severe side crashes depending on the location of the impact. In addition, these roof-rail airbags may inflate during a rollover or in a severe frontal impact. Roof-rail airbags are not designed to inflate in rear impacts. Both roof-rail airbags may inflate when either side of the vehicle is struck or if the sensing system predicts that the vehicle is about to roll over on its side, or in a severe frontal impact.

In any particular crash, no one can say whether an airbag should have inflated simply because of the vehicle damage or repair costs.

## What Makes an Airbag Inflate?

In a deployment event, the sensing system sends an electrical signal triggering a release of gas from the inflator. Gas from the inflator fills the airbag causing the bag to break out of the cover. The inflator, the airbag, and related hardware are all part of the airbag module.

For airbag locations, see *Where Are the Airbags?* ⇨ *55*.

## How Does an Airbag Restrain?

In moderate to severe frontal collisions, even belted occupants can contact the steering wheel or the instrument panel. In moderate to severe side collisions, even belted occupants can contact the inside of the vehicle.

Airbags supplement the protection provided by seat belts by distributing the force of the impact more evenly over the occupant's body.

Rollover capable roof-rail airbags are designed to help contain the head and chest of occupants in the outboard seating positions in the first, second, and third rows. The rollover capable

NOT FOR RESALE



roof-rail airbags are designed to help reduce the risk of full or partial ejection in rollover events, although no system can prevent all such ejections.

But airbags would not help in many types of collisions, primarily because the occupant's motion is not toward those airbags. See *When Should an Airbag Inflate?* ⇨ *56*.

Airbags should never be regarded as anything more than a supplement to seat belts.

## What Will You See After an Airbag Inflates?

**⚠ Warning**

When an airbag inflates, there may be dust in the air. This dust could cause breathing problems for people with a history of asthma or other breathing trouble. To avoid this, everyone in the vehicle should get out as soon as it is safe to do so. If you have breathing problems but cannot get out of the vehicle after an airbag inflates, then get fresh air by opening a window

(Continued)

**Warning (Continued)**

or a door. If you experience breathing problems following an airbag deployment, you should seek medical attention.

After frontal and seat-mounted side impact airbags inflate, they quickly deflate, so quickly that some people may not even realize the airbags inflated. The front center airbag and roof-rail airbags may still be at least partially inflated for some time after they inflate. Some components of the airbag module may be hot for several minutes. For location of the airbags, see *Where Are the Airbags?* ⇨ *55*.

The parts of the airbag that come into contact with you may be warm, but not too hot to touch. There may be some smoke and dust coming from the vents in the deflated airbags. Airbag inflation does not prevent people from leaving the vehicle.

**⚠ Warning**

A crash severe enough to inflate the airbags may have also damaged important functions in the vehicle, such as the fuel system, brake and steering systems, etc. Even if the vehicle appears to be drivable after a moderate crash, there may be concealed damage that could make it difficult to safely operate the vehicle.

Use caution if you should attempt to restart the engine after a crash has occurred.

The vehicle has a feature that may automatically unlock the doors, turn on the interior lights and hazard warning flashers, and shut off the fuel system after the airbags inflate.

This vehicle has a post-collision braking feature that may automatically engage to help slow your vehicle down after a crash. See *Post-Collision Braking (Secondary Collision Mitigation Braking)* ⇨ *187* for more information.

The feature may also activate, without airbag inflation, after an event that exceeds a predetermined threshold. After turning the

NOT FOR RESALE



vehicle off and then on again, the fuel system will return to normal operation; the doors can be locked, the interior lights can be turned off, and the hazard warning flashers can be turned off using the controls for those features. If any of these systems are damaged in the crash they may not operate as normal.

In many crashes severe enough to inflate the airbag, windshields are broken by vehicle deformation. Additional windshield breakage may also occur from the front outboard passenger airbag.

- Airbags are designed to inflate only once. After an airbag inflates, you will need some new parts for the airbag system. If you do not get them, the airbag system will not be there to help protect you in another crash. A new system will include airbag modules and possibly other parts. The service manual for the vehicle covers the need to replace other parts.
- The vehicle has a crash sensing and diagnostic module which records information after a crash. See *Vehicle Data Recording and Privacy* ⇨ *342* and *Event Data Recorders* ⇨ *342*.
- Let only qualified technicians work on the airbag system. Improper service can mean that an airbag system will not work properly. See your dealer for service.

## Passenger Sensing System

**⚠ Warning**

A child in a rear-facing child restraint can be seriously injured or killed if the passenger frontal airbag inflates. This is because the back of the rear-facing child restraint would be very close to the inflating airbag. A child in a forward-facing child restraint can be seriously injured or killed if the passenger frontal airbag inflates and the passenger seat is in a forward position.

Even if the passenger sensing system has turned off the passenger frontal airbag, no system is fail-safe. No one can guarantee that an airbag will not deploy under some unusual circumstance, even though the airbag is turned off.

(Continued)

**Warning (Continued)**

Never put a rear-facing child restraint in the front seat, even if the airbag is off. If securing a forward-facing child restraint in the front outboard passenger seat, always move the seat as far back as it will go. It is better to secure child restraints in the rear seat. Consider using another vehicle to transport the child when a rear seat is not available.

The vehicle has a passenger sensing system for the front outboard passenger position. The passenger airbag status indicator will light on the overhead console when the vehicle is started.




The passenger airbag status indicator may include text and/or symbols to indicate the passenger frontal airbag is either On or Off.

NOT FOR RESALE



The passenger airbag status indicator indicating both On and Off will be visible during the system check.

When the system check is complete, the passenger airbag status indicator for either On or Off will be visible.

See *Passenger Airbag Status Indicator* ⇨ *101*.

The passenger sensing system turns off the front outboard passenger frontal airbag under certain conditions. No other airbag is affected by the passenger sensing system.

The passenger sensing system works with sensors that are part of the front outboard passenger seat and seat belt. The sensors are designed to detect the presence of a properly seated occupant and determine if the front outboard passenger frontal airbag should be allowed to inflate or not.

According to accident statistics, children are safer when properly secured in a rear seat in the correct child restraint for their weight and size.

Whenever possible, children aged 12 and under should be secured in a rear seating position.

Never put a rear-facing child seat in the front. This is because the risk to the rear-facing child is so great, if the airbag inflates.

The passenger sensing system is designed to turn off the front outboard passenger frontal airbag if:

- The front outboard passenger seat is unoccupied.
- The system determines that an infant is present in a child restraint.
- A front outboard passenger takes his/her weight off of the seat for a period of time.
- There is a critical problem with the airbag system or the passenger sensing system.

When the passenger sensing system has turned off the front outboard passenger frontal airbag, the passenger airbag status indicator for Off will light and stay lit as a reminder that the airbag is off. See *Passenger Airbag Status Indicator* ⇨ *101*.

The passenger sensing system is designed to turn on the front outboard passenger frontal airbag anytime the system senses that a person of adult size is sitting properly in the front outboard passenger seat. When the passenger sensing system has allowed the airbag to be enabled, the passenger airbag status indicator for On will light and stay lit as a reminder that the airbag is active.

For some children, including children in child restraints, and for very small adults, the passenger sensing system may or may not turn off the front outboard passenger frontal airbag, depending upon the person's seating posture and body build. Everyone in the vehicle who has outgrown child restraints should wear a seat belt properly — whether or not there is an airbag for that person.

**⚠ Warning**

If the airbag readiness light ever comes on and stays on, it means that something may be wrong with the airbag system. To help avoid injury to yourself or others, have the vehicle serviced right away. See *Airbag Readiness Light* ⇨ *101* for more information, including important safety information.

### If the On Indicator Is Lit for a Child Restraint

The passenger sensing system is designed to turn off the front outboard passenger frontal airbag, if the system determines that an infant is present in a child restraint. If a child restraint has been installed and the passenger airbag status indicator for On is lit:

NOT FOR RESALE



1. Turn the vehicle off.
2. Remove the child restraint from the vehicle.
3. Remove any additional items from the seat such as blankets, cushions, seat covers, seat heaters, or seat massagers.
4. Reinstall the child restraint following the directions provided by the child restraint manufacturer and refer to *Securing Child Restraints (With the Seat Belt in the Front Seat)* ⇨ *81 Securing Child Restraints (With the Seat Belt in the Rear Seat)* ⇨ *79*.

   Make sure the seat belt retractor is locked by pulling the shoulder belt all the way out of the retractor when installing the child restraint, even if the child restraint is equipped with a seat belt lock off. When the retractor lock is set, the belt can be tightened but not pulled out of the retractor.
5. If, after reinstalling the child restraint and restarting the vehicle, the passenger airbag status indicator for On is still lit, turn the vehicle off. Then slightly recline the vehicle seatback and adjust the seat cushion, if adjustable, to make sure that the vehicle seatback is not pushing the child restraint into the seat cushion. Also make sure the child restraint is not trapped under the vehicle head restraint. If this happens, adjust the head restraint. See *Head Restraints* ⇨ *33*.
6. Restart the vehicle.

   The passenger sensing system may or may not turn off the airbag for a child in a child restraint depending upon the child's size. It is better to secure the child restraint in a rear seat. Never put a rear-facing child restraint in the front seat, even if the passenger airbag status indicator for On is not lit.

### If the Off Indicator Is Lit for an Adult-Sized Occupant

**⚠ Warning**

If the front outboard passenger airbag is turned off for an adult-sized occupant, the airbag will not be able to inflate and help protect that person in a crash, resulting in an increased risk of serious injury or even death. An adult-sized occupant should not ride in the front outboard passenger seat, if the passenger airbag OFF indicator is lit.



If a person of adult size is sitting in the front outboard passenger seat, but the passenger airbag status indicator for Off is lit, it could be because that person is not sitting properly in the seat or that the child restraint locking feature is engaged. Use the following steps to allow the system to detect that person and enable the front outboard passenger frontal airbag:

1. Turn the vehicle off.
2. Remove any additional material from the seat, such as blankets, cushions, seat covers, seat heaters, or seat massagers.
3. Place the seatback in the fully upright position.

NOT FOR RESALE



4. Have the person sit upright in the seat, centered on the seat cushion, with legs comfortably extended.
5. If the shoulder portion of the belt is pulled out all the way, the child restraint locking feature will be engaged. This may unintentionally cause the passenger sensing system to turn the airbag off for some adult-sized occupants. If this happens, unbuckle the belt, let the belt go back all the way, and then buckle the belt again without pulling the belt out all the way.
6. Restart the vehicle and have the person remain in this position for two to three minutes after the passenger airbag status indicator for On is lit.

### Additional Factors Affecting System Operation

**Warning**

Stowing articles under the passenger seat or between the passenger seat cushion and seatback may interfere with the proper operation of the passenger sensing system.

Seat belts help keep the passenger in position on the seat during vehicle maneuvers and braking, which helps the passenger sensing system maintain the passenger airbag status. See “Seat Belts” and “Child Restraints” in the Index for additional information about the importance of proper restraint use.

A thick layer of additional material, such as a blanket or cushion, or aftermarket equipment such as seat covers, seat heaters, and seat massagers can affect how well the passenger sensing system operates. We recommend that you not use seat covers or other aftermarket equipment except when approved by GM for your specific vehicle. See *Adding Equipment to the Airbag-Equipped Vehicle* ⇨ *63* for more information about modifications that can affect how the system operates.

The passenger airbag status indicator for On may be lit if an object, such as a briefcase, handbag, grocery bag, laptop, or other electronic device, is put on an unoccupied seat. If this is not desired remove the object from the seat.

## Servicing the Airbag-Equipped Vehicle

**Warning**

For up to 10 seconds after the vehicle is turned off and the battery is disconnected, an airbag can still inflate during improper service. You can be injured if you are close to an airbag when it inflates. Avoid yellow connectors. They are probably part of the airbag system. Be sure to follow proper service procedures, and make sure the person performing work for you is qualified to do so.

Airbags affect how the vehicle should be serviced. There are parts of the airbag system in several places around the vehicle. Your dealer and the service manual have information about servicing the vehicle and the airbag system. To purchase a service manual, see *Publication Ordering Information* ⇨ *340*.

NOT FOR RESALE



## Adding Equipment to the Airbag-Equipped Vehicle

Adding accessories that change the vehicle's frame, bumper system, height, front end, or side sheet metal may keep the airbag system from working properly.

The operation of the airbag system can also be affected by changing, including improperly repairing or replacing, any parts of the following:

- Airbag system, including airbag modules, front or side impact sensors, sensing and diagnostic module, airbag wiring, or front center console
- Front seats, including stitching, seams or zippers
- Seat belts
- Steering wheel, instrument panel, overhead console, ceiling trim, or pillar garnish trim
- Inner door seals, including speakers

Your dealer and the service manual have information about the location of the airbag modules and sensors, sensing and diagnostic module, and airbag wiring along with the proper replacement procedures.

In addition, the vehicle has a passenger sensing system for the front outboard passenger position, which includes sensors that are part of the passenger seat. The passenger sensing system may not operate properly if the original seat trim is replaced with non-GM covers, upholstery, or trim, or with GM covers, upholstery, or trim designed for a different vehicle. Any object, such as an aftermarket seat heater or a comfort enhancing pad or device, installed under or on top of the seat fabric, could also interfere with the operation of the passenger sensing system. This could either prevent proper deployment of the passenger airbag(s) or prevent the passenger sensing system from properly turning off the passenger airbag(s). See *Passenger Sensing System* ⇨ *59*.

If the vehicle has rollover roof-rail airbags, see *Different Size Tires and Wheels* ⇨ *294* for additional important information.

If the vehicle must be modified because you have a disability and you have questions about whether the modifications will affect the vehicle's airbag system, or if you have questions about whether the airbag system will be affected if the vehicle is modified for any other reason, call Customer Assistance. See *Customer Assistance Offices* ⇨ *335*.

## Airbag System Check

| Caution |
| --- |
| If an airbag covering is damaged, opened, or broken, the airbag may not work properly. Do not open or break the airbag coverings. If there are any opened or broken airbag coverings, have the airbag covering and/or airbag module replaced. For the location of the airbags, see *Where Are the Airbags?* ⇨ *55*. See your dealer for service. |

The airbag system does not need regularly scheduled maintenance or replacement. Make sure the airbag readiness light is working. See *Airbag Readiness Light* ⇨ *101*.

NOT FOR RESALE



## Replacing Airbag System Parts After a Crash

**⚠ Warning**

A crash can damage the airbag systems in the vehicle. A damaged airbag system may not properly protect you and your passenger(s) in a crash, resulting in serious injury or even death. To help make sure the airbag systems are working properly after a crash, have them inspected and any necessary replacements made as soon as possible.

If an airbag inflates, you will need to replace airbag system parts. See your dealer for service.

If the airbag readiness light stays on after the vehicle is started or comes on when you are driving, the airbag system may not work properly. Have the vehicle serviced right away. See *Airbag Readiness Light* ⇨ *101*.

# Child Restraints

## Older Children

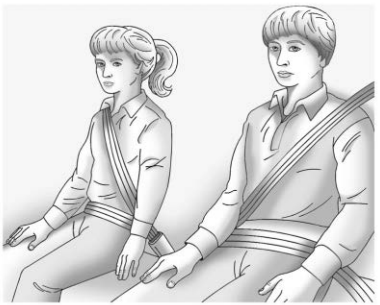

Older children who have outgrown booster seats should wear the vehicle seat belts. See *How to Wear Seat Belts Properly* ⇨ *47*.

The manufacturer instructions that come with the booster seat state the weight and height limitations for that booster. Use a booster seat with a lap-shoulder belt until the child passes the fit test below:

- Sit all the way back on the seat. Do the knees bend at the seat edge? If yes, continue. If no, return to the booster seat.
- Buckle the lap-shoulder belt. Does the shoulder belt rest on the shoulder? If yes, continue. If no, try using the rear seat belt comfort guide, if available. See "Rear Seat Belt Comfort Guides" under *Lap-Shoulder Belt* ⇨ *49*. If a comfort guide is not available, or if the shoulder belt still does not rest on the shoulder, then return to the booster seat.
- Does the lap belt fit low and snug on the hips, touching the thighs? If yes, continue. If no, return to the booster seat.
- Can proper seat belt fit be maintained for the length of the trip? If yes, continue. If no, return to the booster seat.

NOT FOR RESALE



**Q: What is the proper way to wear seat belts?**

**A:** An older child should wear a lap-shoulder belt and get the additional restraint a shoulder belt can provide. The shoulder belt should not cross the face or neck. The lap belt should fit snugly below the hips, just touching the top of the thighs. This applies belt force to the child's pelvic bones in a crash. It should never be worn over the abdomen, which could cause severe or even fatal internal injuries in a crash.

Also see "Rear Seat Belt Comfort Guides" under *Lap-Shoulder Belt* ⇨ *49*.

According to accident statistics, children are safer when properly restrained in a rear seating position.

In a crash, children who are not buckled up can strike other people who are buckled up, or can be thrown out of the vehicle. Older children need to use seat belts properly.

**⚠ Warning**

Never allow more than one child to wear the same seat belt. The seat belt cannot properly spread the impact forces. In a crash, they can be crushed together and seriously injured. A seat belt must be used by only one person at a time.



**⚠ Warning**

Never allow a child to wear the seat belt shoulder belt under both arms or behind their back. A child can be seriously injured by not wearing the lap-shoulder belt properly. In a crash, the child would not be restrained by the shoulder belt. The child could move too far forward increasing the chance of head and neck injury. The child might also slide under the lap belt. The belt force would then be applied right on the abdomen. That could cause serious or fatal injuries. The shoulder belt should go over the shoulder and across the chest.



NOT FOR RESALE



**⚠ Warning**

Children can be seriously injured or killed if the shoulder belt is worn behind their back, under their legs, or wrapped around their neck. The shoulder belt can tighten but cannot be loosened if it is locked. The shoulder belt locks when it is pulled all the way out of the retractor. It unlocks when the shoulder belt is allowed to go all the way back into the retractor, but it cannot do this if it is wrapped around the child. Never leave children unattended in a vehicle and never allow children to improperly wear, or play with, the seat belts.

## Infants and Young Children

Everyone in a vehicle needs protection! This includes infants and all other children. Neither the distance traveled nor the age and size of the traveler changes the need, for everyone, to use safety restraints. In fact, the law in every state in the United States and in every Canadian province says children up to some age must be restrained while in a vehicle.

**⚠ Warning**

Children can be seriously injured or killed if the shoulder belt is worn behind their back, under their legs, or wrapped around their neck. The shoulder belt can tighten but cannot be loosened if it is locked. The shoulder belt locks when it is pulled all the way out of the retractor. It unlocks when the shoulder belt is allowed to go all the way back into the retractor, but it cannot do this if it is wrapped around the child. Never leave children unattended in a vehicle and never allow children to improperly wear, or play with, the seat belts.

Every time infants and young children ride in vehicles, they should have the protection provided by appropriate child restraints. Neither the vehicle seat belt system nor its airbag system is designed for them.

Children who are not restrained properly can strike other people, or can be thrown out of the vehicle.

**⚠ Warning**

Never hold an infant or a child while riding in a vehicle. Due to crash forces, an infant or a child will become so heavy it is not possible to hold it during a crash. For example, in a crash at only 40 km/h (25 mph), a 5.5 kg (12 lb) infant will suddenly become a 110 kg (240 lb) force on a person's arms. An infant or child should be secured in an appropriate child restraint.



NOT FOR RESALE



**⚠ Warning**

Children who are up against, or very close to, any airbag when it inflates can be seriously injured or killed. Never put a rear-facing child restraint in the front passenger seat. Secure a rear-facing child restraint in a rear seat.

It is also better to secure a forward-facing child restraint in a rear seat. If a forward-facing child restraint must be secured in the front passenger seat, always move the front passenger seat as far back as it will go.

If a child restraint is installed in the second row center seat, move the second row seat to the rearward position, whenever possible, to minimize contact with the front center airbag.



**⚠ Warning**

To reduce the risk of neck and head injury in a crash, infants and toddlers should be secured in a rear-facing child restraint until age two, or until they reach the maximum height and weight limits of their child restraint.

**⚠ Warning**

A young child's hip bones are still so small that the vehicle seat belt may not remain low on the hip bones, as it should. Instead, it may settle up around the child's abdomen. In a crash, the belt would apply force on a body area that is unprotected by any bony structure. This alone could cause serious or fatal injuries. To reduce the risk of serious or fatal injuries during a crash, young children should always be secured in an appropriate child restraint.

Child restraints are devices used to restrain, seat, or position children in the vehicle and are sometimes called child seats or car seats.

**There are three basic types of child restraints:**

- Forward-facing child restraints
- Rear-facing child restraints
- Belt-positioning booster seats

The proper child restraint for your child depends on their size, weight, and age, and also on whether the child restraint is compatible with the vehicle in which it will be used.

NOT FOR RESALE



For each type of child restraint, there are many different models available. When purchasing a child restraint, be sure it is designed to be used in a motor vehicle and is designed by a genuine child restraint manufacturer. If it is, the child restraint will have a label saying that it meets federal motor vehicle safety standards.

The instruction manual that is provided with the child restraint states the weight and height limitations for that particular child restraint. In addition, there are many kinds of child restraints available for children with special needs.

## Child Restraint Systems

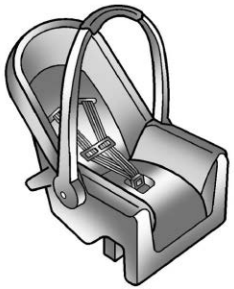

**Rear-Facing Infant Restraint**

A rear-facing child restraint provides restraint with the seating surface against the back of the infant.

The harness system holds the infant in place and, in a crash, acts to keep the infant positioned in the restraint.



**Forward-Facing Child Restraint**

A forward-facing child restraint provides restraint for the child's body with the harness.

NOT FOR RESALE



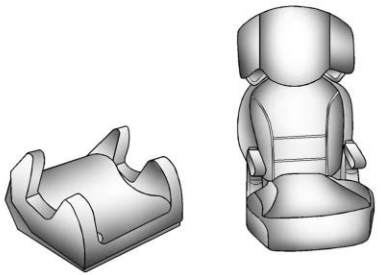

**Booster Seats**

A belt-positioning booster seat is used for children who have outgrown their forward-facing child restraint. Boosters are designed to improve the fit of the vehicle seat belt system until the child is large enough for the vehicle seat belts to fit properly without a booster seat. See the seat belt fit test in *Older Children* ⇨ *64*.



**Backless Booster**

Backless booster fitment requirement:

Some backless booster seats are not suitable for rear seats that have oversized side seat bolsters, as they can push the backless booster forward from the seat back.

To use a backless booster:

1. Center the booster on the seat cushion.
2. Ensure the backless booster seat contacts the seat back.

If the backless booster does not meet the fit test described in Steps 1–2, select another booster seat.

### Securing an Add-On Child Restraint in the Vehicle

**⚠ Warning**

Each top-tether anchor is designed to anchor only one child restraint. Do not attach more than one child restraint to a single top-tether anchor. The anchor may come loose or break, potentially causing personal injury, property damage, or death.

**⚠ Warning**

A child can be seriously injured or killed in a crash if the child restraint is not properly secured in the vehicle. Secure the child restraint properly in the vehicle using the vehicle seat belt or LATCH system, following the instructions that came with that child restraint and the instructions in this manual.

To help reduce the chance of injury, the child restraint must be secured in the vehicle. Child restraints must be secured in vehicle seats by the lap belt portion of a lap-shoulder belt, or by the LATCH system. See *Lower Anchors and*

NOT FOR RESALE



*Tethers for Children (LATCH System)* ⇨ *72* for more information. Never use a seat belt extender when installing a child restraint. Never use non-regulated aftermarket anchors or attachments to secure a child restraint. Children can be endangered in a crash if the child restraint is not properly secured in the vehicle.

When securing an add-on child restraint, see the following:

- Instruction labels provided on the child restraint
- Instruction manual provided with the child restraint
- This vehicle owner's manual

The child restraint instructions are important, so if they are not available, obtain a replacement copy from the manufacturer.

Keep in mind that an unsecured child restraint can move around in a collision or sudden stop and injure people in the vehicle. Be sure to properly secure any child restraint in the vehicle — even when no child is in it.

In some areas Certified Child Passenger Safety Technicians (CPSTs) are available to inspect and demonstrate how to correctly use and install child restraints. In the U.S., see the National Highway Traffic Safety Administration (NHTSA) website to locate the nearest child safety seat inspection station. For CPST availability in Canada, check with Transport Canada or the Provincial Ministry of Transportation office.

### Securing the Child Within the Child Restraint

**⚠ Warning**

A child can be seriously injured or killed in a crash if the child is not properly secured in the child restraint. Secure the child properly following the instructions that came with that child restraint.

## Where to Put the Restraint

According to accident statistics, children and infants are safer when properly restrained in an appropriate child restraint secured in a rear seating position.

Whenever possible, children aged 12 and under should be secured in a rear seating position.

The vehicle is equipped with a front center airbag in the inboard side of the driver seat. Even with a front center airbag, a child restraint can be installed in any second row seating position.

Never put a rear-facing child restraint in the front. This is because the risk to the rear-facing child is so great if the airbag deploys.

**⚠ Warning**

A child in a rear-facing child restraint can be seriously injured or killed if the front passenger airbag inflates. This is because the back of the rear-facing child restraint would be very close to the inflating airbag. A child in a forward-facing child restraint can be seriously injured or killed if the front passenger airbag inflates and the passenger seat is in a forward position.

Even if the passenger sensing system has turned off the front passenger frontal airbag, no system is fail-safe. No one can guarantee that an airbag will not deploy under some unusual circumstance, even though it is turned off.

(Continued)

NOT FOR RESALE



**Warning (Continued)**

Secure rear-facing child restraints in a rear seat, even if the airbag is off. If you secure a forward-facing child restraint in the front seat, always move the front passenger seat as far back as it will go. It is better to secure the child restraint in a rear seat.

See *Passenger Sensing System* ⇨ *59* for additional information.

If a child restraint is installed in a second row center seat, move the second row seat to the rearward position, whenever possible, to minimize contact with the front center airbag.

When securing a child restraint with the seat belts in a rear seat position, study the instructions that came with the child restraint to make sure it is compatible with this vehicle.

Child restraints and booster seats vary considerably in size, and some may fit in certain seating positions better than others. Do not install a child restraint in any rear seating position where it cannot be installed securely.

Depending on where you place the child restraint and the size of the child restraint, you may not be able to access adjacent seat belts or LATCH anchors for additional passengers or child restraints. Adjacent seating positions should not be used if the child restraint prevents access to or interferes with the routing of the seat belt.

Adjust the seat in front of a child restraint to ensure proper installation according to the child restraint manual. Move the front seat forward to avoid contact between the child restraint and the seat or any accessories mounted to the seat.

When installing a child restraint in an adjustable second row seating position, the seat should be adjusted fore or aft to ensure proper installation according to the child restraint manual. If the seat is able to recline, the seat back should be positioned to its full upright position before installing a child restraint.



**⚠ Warning**

To reduce risk of injury, adjust the reclining rear seat back to a near upright seating position according to the child restraint manufacturer instructions. The child restraint must rest against the seat back.

Wherever a child restraint is installed, be sure to follow the instructions that came with the child restraint and secure the child restraint properly.

NOT FOR RESALE



Keep in mind that an unsecured child restraint can move around in a collision or sudden stop and injure people in the vehicle. Be sure to properly secure any child restraint in the vehicle — even when no child is in it.

## Lower Anchors and Tethers for Children (LATCH System)

The LATCH system secures a child restraint during driving or in a crash. LATCH attachments on the child restraint are used to attach the child restraint to the anchors in the vehicle. This system is designed to make installation of a child restraint easier.

In order to use the LATCH system in your vehicle, you need a child restraint that has LATCH attachments. LATCH-compatible rear-facing and forward-facing child seats can be properly installed using either the LATCH anchors or the vehicle's seat belts. Do not use both the seat belts and the LATCH anchorage system to secure a rear-facing or forward-facing child restraint.

Booster seats use the vehicle's seat belts to secure the child and the booster seat. If the manufacturer recommends that the booster seat be secured with the LATCH system, this can be done as long as the booster seat can be positioned properly and there is no interference with the proper positioning of the lap-shoulder belt on the child.

Make sure to follow the instructions that came with the child restraint, and also the instructions in this manual.

When installing a child restraint with a top tether, you must also use either the lower anchors or the seat belts to properly secure the child restraint. A child restraint must never be attached using only the top tether.

NOT FOR RESALE



For a forward-facing five-point harness child restraint where the combined weight of the child and restraint are up to 29.5 kg (65 lb), use either the lower LATCH anchorages with the top tether anchorage, or the seat belt with the top tether anchorage. Where the combined weight of the child and restraint are greater than 29.5 kg (65 lb), use the seat belt with the top tether anchorage only.

## Recommended Methods for Attaching Child Restraints

| **Restraint Type** | **Combined Weight of the Child + Child Restraint** | **Use Only Approved Attachment Methods Shown with an X** | | | |
|---|---|---|---|---|---|
| | | **LATCH** – Lower Anchors Only | **Seat Belt Only** | **LATCH** – Lower Anchors and Top Tether Anchor | **Seat Belt and Top Tether Anchor** |
| Rear-Facing Child Restraint | Up to 29.5 kg (65 lb) | **X** | **X** | | |
| Rear-Facing Child Restraint | Greater than 29.5 kg (65 lb) | | **X** | | |
| Forward-Facing Child Restraint | Up to 29.5 kg (65 lb) | | | **X** | **X** |
| Forward-Facing Child Restraint | Greater than 29.5 kg (65 lb) | | | | **X** |

See *Securing Child Restraints (With the Seat Belt in the Front Seat)* ⇨ *81 Securing Child Restraints (With the Seat Belt in the Rear Seat)* ⇨ *79*.

Child restraints built after March 2014 are labeled with the maximum child weight, with which the LATCH system can be used for installing the child restraint.

The following explains how to attach a child restraint with these attachments in the vehicle.

Not all vehicle seating positions have lower anchors. In this case, the seat belt must be used (with top tether where available) to secure the child restraint. See *Securing Child*

NOT FOR RESALE



*Restraints (With the Seat Belt in the Front Seat)* ⇨ *81 Securing Child Restraints (With the Seat Belt in the Rear Seat)* ⇨ *79*.

### Lower Anchors

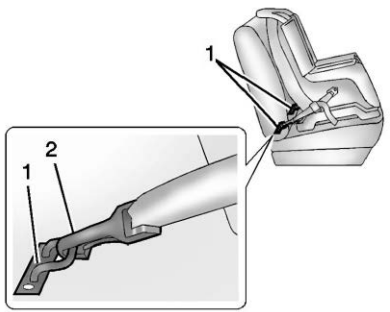


Lower anchors (1) are metal bars built into the vehicle. There are two lower anchors for each LATCH seating position that will accommodate a child restraint with lower attachments (2).

### Top Tether Anchor

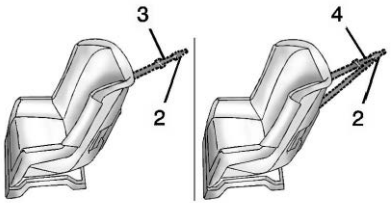


A top tether (3, 4) is used to secure the top of the child restraint to the vehicle. A top tether anchor is built into the vehicle. The top tether attachment hook (2) on the child restraint connects to the top tether anchor in the vehicle in order to reduce the forward movement and rotation of the child restraint during driving or in the event of a crash.

The child restraint may have a single tether (3) or a dual tether (4). Either will have a single attachment hook (2) to secure the top tether to the anchor.

Some child restraints with a top tether are designed for use with or without the top tether being attached. Others require the top tether always to be attached. In Canada, the law requires that forward-facing child restraints have a top tether, and that the tether be attached. Be sure to read and follow the instructions for your child restraint.

### Lower Anchor and Top Tether Anchor Locations

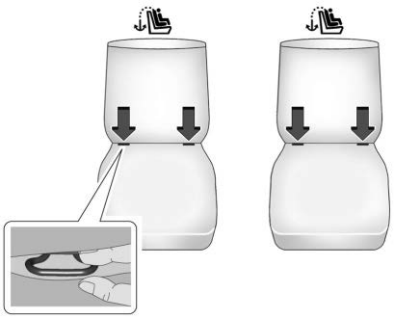

**Second Row**

: Seating positions with top tether anchors.

NOT FOR RESALE



Both rear seating positions have exposed metal lower anchors in the seat cushion pockets near the crease between the seatback and the seat cushion.

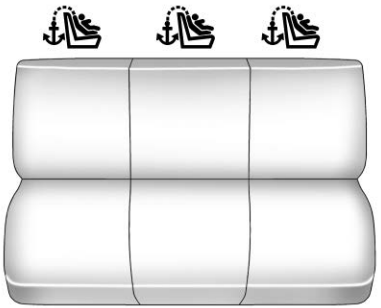

**Third Row**

: Seating positions with top tether anchors.



To assist in locating the top tether anchors, the top tether anchor symbol is near the anchor.

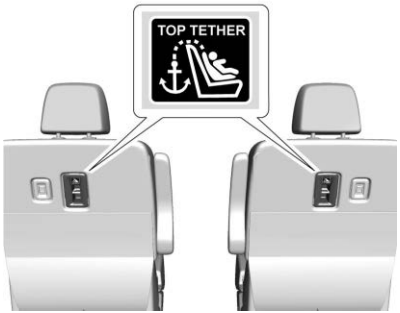


**Second Row**

The top tether anchors are on the rear of the seatback for each seating position in the second row.

Be sure to use an anchor located directly behind the seating position where the child restraint will be placed.

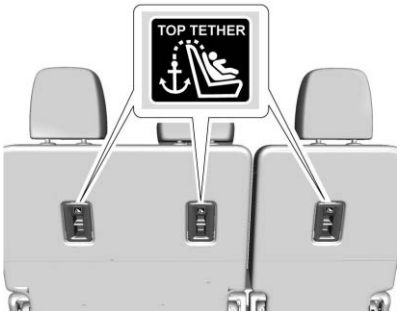


**Third Row**

The top tether anchors are on the rear of the seatback for each seating position in the third row.

For models with a cargo cover, the top tether anchors are on the back of the rear seatbacks. Remove the cargo cover before installing the top tether. The cargo cover should remain off while the top tether is in use. Be sure to use an anchor directly behind the seating position where the child restraint will be placed.

Do not secure a child restraint in a position without a top tether anchor if a national or local law requires that the top tether be

NOT FOR RESALE



attached, or if the instructions that come with the child restraint say that the top tether must be attached.

According to accident statistics, children and infants are safer when properly restrained in a child restraint system or infant restraint system secured in a rear seating position. See *Where to Put the Restraint* ⇨ *70* for additional information.

### Securing a Child Restraint Designed for the LATCH System

**⚠ Warning**

A child could be seriously injured or killed in a crash if the child restraint is not properly attached to the vehicle using either the LATCH anchors or the vehicle seat belt. Follow the instructions that came with the child restraint and the instructions in this manual.

**⚠ Warning**

To reduce the risk of serious or fatal injuries during a crash, do not attach more than one child restraint to a single anchor. Attaching more than one child restraint to a single anchor could cause the anchor or attachment to come loose or even break during a crash. A child or others could be injured.

**⚠ Warning**

Children can be seriously injured or strangled if a shoulder belt is wrapped around their neck. The shoulder belt can tighten but cannot be loosened if it is locked. The shoulder belt locks when it is pulled all the way out of the retractor. It unlocks when the shoulder belt is allowed to go all the way back into the retractor, but it cannot do this if it is wrapped around a child's neck. If the shoulder belt is locked and tightened around a child's neck, the only way to loosen the belt is to cut it.

(Continued)

**Warning (Continued)**

Buckle any unused seat belts behind the child restraint so children cannot reach them. Pull the shoulder belt all the way out of the retractor to set the lock, and tighten the belt behind the child restraint after the child restraint has been installed.

**Caution**

Do not let the LATCH attachments rub against the vehicle's seat belts. This may damage these parts. If necessary, move buckled seat belts to avoid rubbing the LATCH attachments.

Do not fold the rear seatback when the seat is occupied. Do not fold the empty rear seat with a seat belt buckled. This could damage the seat belt or the seat. Unbuckle and return the seat belt to its stowed position, before folding the seat.

This vehicle is equipped with a front center airbag in the inboard side of the driver seat. Even with a front center airbag, a child restraint can be installed in any second row seating

NOT FOR RESALE



position. If a child restraint is installed in a second row center seat, move the second row seat to the rearward position, whenever possible, to minimize contact with the front center airbag.

If you need to secure more than one child restraint in the rear seat, see *Where to Put the Restraint* ⇨ *70*.

1. Put the child restraint on the seat.
2. Attach and tighten the lower attachments to the lower anchors. If the child restraint does not have lower attachments or the desired seating position does not have lower anchors, secure the child restraint with the top tether and the seat belt. Refer to your child restraint manufacturer instructions and the instructions in this manual.
   - 2.1 Find the lower anchors for the desired seating position.
   - 2.2 To access the lower anchors in the second row, it may help to recline the seatback.

     Third row seatbacks must be upright before placing the child restraint on the seat.
   - 2.3 Put the child restraint on the seat.
   - 2.4 Attach and tighten the lower attachments on the child restraint to the lower anchors.

     If necessary, adjust the angle of the second row seatback to achieve a tight installation. Make sure the second row bench seatbacks are aligned at the same angle.
3. If the child restraint manufacturer recommends that the top tether be attached, adjust the top tether to its full length and attach it to the anchor. Refer to the child restraint instructions and the following steps:
   - 3.1 Find the top tether anchor.
   - 3.2 Route, attach, and tighten the top tether according to your child restraint instructions and the following instructions:

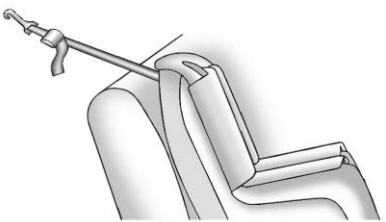

If the position you are using does not have a head restraint and you are using a single tether, route the tether over the seatback.

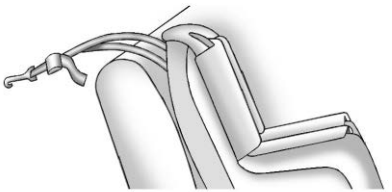

If the position you are using does not have a head restraint and you are using a dual tether, route the tether over the seatback.

NOT FOR RESALE



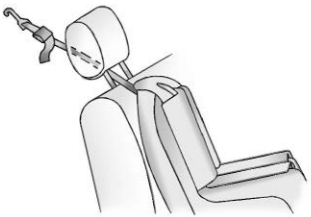

If the position you are using has an adjustable headrest or head restraint, adjust it accordingly to allow proper fitment. If you are using a single tether, route the tether in between the headrest or head restraint posts.

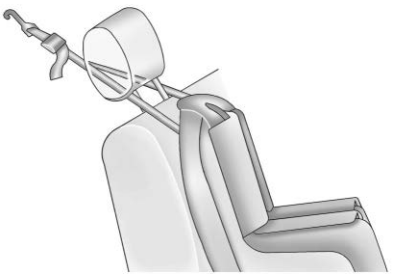

If the position you are using has an adjustable headrest or head restraint, adjust it accordingly to allow proper fitment. If you are using a dual tether, route the tether around the headrest or head restraint posts.

If the child restraint is installed next to a center seat, make sure the top tether does not interfere with the center seating position shoulder belt/retractor. If it does, find another suitable seating position to install the child restraint.

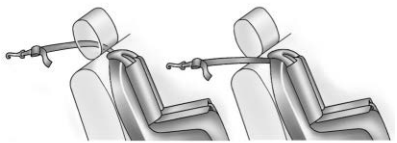

If the position you are using has a fixed head restraint and you are using a single tether, route the tether under the head restraint and in between the head restraint posts or around the outboard side of the head restraint.

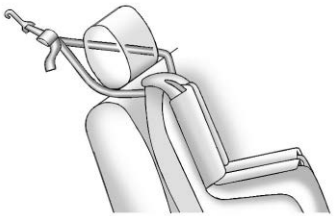

If the position you are using has a fixed head restraint and you are using a dual tether, route the tether around the head restraint.

If the child restraint is installed next to a center seat, make sure the top tether does not interfere with the center seating position shoulder belt/retractor. If it does, find another suitable seating position to install the child restraint.

NOT FOR RESALE



4. Before placing a child in the child restraint, make sure it is securely held in place. To check, firmly grip the child restraint at the LATCH path and attempt to move it side to side and back and forth. There should be no more than 2.5 cm (1 in) of movement, for proper installation.

## Replacing LATCH System Parts After a Crash

**⚠ Warning**

A crash can damage the LATCH system in the vehicle. A damaged LATCH system may not properly secure the child restraint, resulting in serious injury or even death in a crash. To help make sure the LATCH system is working properly after a crash, see your dealer to have the system inspected and any necessary replacements made as soon as possible.

If the vehicle has the LATCH system and it was being used during a crash, new LATCH system parts may be needed. New parts and repairs may be necessary even if the LATCH system was not being used at the time of the crash.

## Securing Child Restraints (With the Seat Belt in the Rear Seat)

The vehicle is equipped with a front center airbag in the inboard side of the driver seat. Even with a front center airbag, a child restraint can be installed in any second row seating position. If you install a child restraint in a second row center seat, move the second row seat to the rearward position, whenever possible, to minimize contact with the front center airbag.

When securing a child restraint with the seat belts in a rear seat position, study the instructions that came with the child restraint to make sure it is compatible with this vehicle.

If the child restraint has the LATCH system, see *Lower Anchors and Tethers for Children (LATCH System)* ⇨ 72 for how and where to install the child restraint using LATCH. If a child restraint is secured in the vehicle using a seat belt and it uses a top tether, see *Lower Anchors and Tethers for Children (LATCH System)* ⇨ 72 for top tether anchor locations.

Do not secure a child seat in a position without a top tether anchor if a national or local law requires that the top tether be anchored, or if the instructions that come with the child restraint say that the top strap must be anchored. Refer to the instructions that came with the child restraint and see *Lower Anchors and Tethers for Children (LATCH System)* ⇨ 72.

In Canada, the law requires that forward-facing child restraints have a top tether, and that the tether be attached.

If the child restraint or vehicle seat position does not have the LATCH system, you will be using the seat belt to secure the child restraint. Be sure to follow the instructions that came with the child restraint.

If more than one child restraint needs to be installed in the rear seat, be sure to read *Where to Put the Restraint* ⇨ 70.

1. Put the child restraint on the seat.
2. Pick up the latch plate and run the lap and shoulder portions of the vehicle seat belt through or around the child restraint. Ensure the seat belt webbing is routed as directly as possible and is not caught on seat handles or plastic trim. The child restraint instructions will show you how.

NOT FOR RESALE





3. Push the latch plate into the buckle until it clicks.

   Position the release pushbutton on the buckle, away from the child restraint, so that the seat belt could be quickly unbuckled if necessary.



4. Pull the shoulder belt all the way out of the retractor to set the lock. When the retractor lock is set, the belt can be tightened but not pulled out of the retractor.

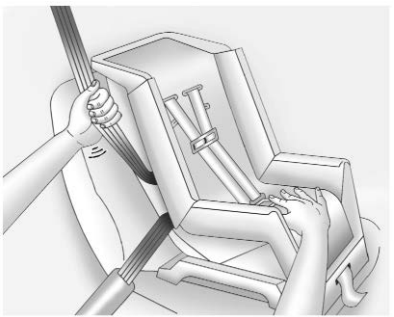

5. To tighten the belt, push down on the child restraint, pull the shoulder portion of the belt to tighten the lap portion of the belt, and feed the shoulder belt back into the retractor. When installing a forward-facing child restraint, it may be helpful to use your knee to push down on the child restraint as you tighten the belt.

   There must not be direct contact of the child restraint to the buckle release pushbutton. If there is contact, reposition the child restraint using the instructions that came with the child restraint. If there is still contact, use another seating position or child restraint.

   Try to pull the belt out of the retractor to make sure the retractor is locked. If the retractor is not locked, repeat Steps 4 and 5.

6. Tighten the top tether. See *Lower Anchors and Tethers for Children (LATCH System)* ⇨ 72.

7. If the child restraint has a top tether, follow the child restraint manufacturer's instructions regarding the use of the top tether. See *Lower Anchors and Tethers for Children (LATCH System)* ⇨ 72.

NOT FOR RESALE



8. Before placing a child in the child restraint, make sure it is securely held in place. To check, firmly grip the child restraint at the seat belt path and attempt to move it side to side and back and forth. When the child restraint is properly installed, there should be no more than 2.5 cm (1 in) of movement.

To remove the child restraint, unbuckle the vehicle seat belt and let it return to the stowed position. If the top tether is attached to a top tether anchor, disconnect it.

Many child restraints are too wide to be correctly secured in the center rear seat, although some will fit there. If the center seat position is too narrow for the child restraint, secure it in a rear outboard seat position.

If a rear-facing child restraint is installed in the rear center seat, ensure that the second-row arm rest remains in the stowed (closed) position. If the arm rest cannot be stowed, or if the armrest can open fully, install the child restraint in another seating position.

## Securing Child Restraints (With the Seat Belt in the Front Seat)

This vehicle has airbags. A rear seat is a safer place to secure a forward-facing child restraint. See *Where to Put the Restraint* ⇨ *70*.

In addition, the vehicle has a passenger sensing system which is designed to turn off the front outboard passenger frontal airbag under certain conditions. See *Passenger Sensing System* ⇨ *59* and *Passenger Airbag Status Indicator* ⇨ *101* for more information, including important safety information.

Never put a rear-facing child seat in the front. This is because the risk to the rear-facing child is so great, if the airbag deploys.

**⚠ Warning**

A child in a rear-facing child restraint can be seriously injured or killed if the front outboard passenger frontal airbag inflates. This is because the back of the rear-facing child restraint would be very close to the inflating airbag. A child in a forward-facing child restraint can be seriously injured

(Continued)

**Warning (Continued)**

or killed if the front outboard passenger frontal airbag inflates and the passenger seat is in a forward position.

Even if the passenger sensing system has turned off the front outboard passenger frontal airbag, no system is fail-safe. No one can guarantee that an airbag will not deploy under some unusual circumstance, even though it is turned off.

Secure rear-facing child restraints in a rear seat, even if the airbag is off. If you secure a forward-facing child restraint in the front outboard passenger seat, always move the seat as far back as it will go. It is better to secure the child restraint in a rear seat.

See *Passenger Sensing System* ⇨ *59* for additional information.

If the child restraint uses a top tether, see *Lower Anchors and Tethers for Children (LATCH System)* ⇨ *72* for top tether anchor locations.

Do not secure a child seat in a position without a top tether anchor if a national or local law requires that the top tether be anchored,

NOT FOR RESALE



or if the instructions that come with the child restraint say that the top tether must be anchored.

In Canada, the law requires that forward-facing child restraints have a top tether, and that the tether be attached.

When using the lap-shoulder belt to secure the child restraint in this position, follow the instructions that came with the child restraint and the following instructions:

1. Move the seat as far back as it will go before securing the forward-facing child restraint. Move the seat upward or the seatback to an upright position, if needed, to get a tight installation of the child restraint.

   When the passenger sensing system has turned off the front outboard passenger frontal airbag, the OFF indicator on the passenger airbag status indicator should light and stay lit when you start the vehicle. See *Passenger Airbag Status Indicator* ⇨ *101*.

2. Put the child restraint on the seat.
3. Pick up the latch plate and run the lap and shoulder portions of the vehicle seat belt through or around the restraint. Ensure the seat belt webbing is routed as direct as possible and is not caught on seat handles or plastic trim. The child restraint instructions will show you how.

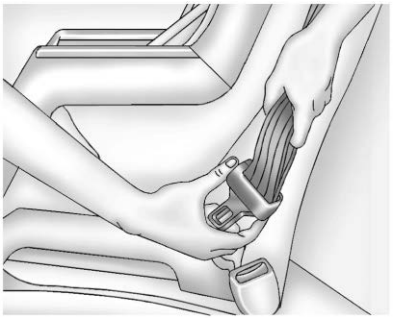

Tilt the latch plate to adjust the belt if needed.



4. Push the latch plate into the buckle until it clicks.

   Position the release pushbutton on the buckle, away from the child restraint, so that the seat belt could be quickly unbuckled if necessary.

NOT FOR RESALE





5. Pull the shoulder belt all the way out of the retractor to set the lock. When the retractor lock is set, the belt can be tightened but not pulled out of the retractor.

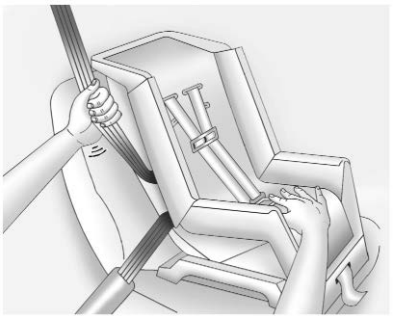

6. To tighten the belt, push down on the child restraint, pull the shoulder portion of the belt to tighten the lap portion of the belt, and feed the shoulder belt back into the retractor.

   When installing a forward-facing child restraint, it may be helpful to use your knee to push down on the child restraint as you tighten the belt.

   There must not be direct contact of the child restraint to the buckle release pushbutton. If there is contact, move the seat upward and repeat prior installation steps. If there is still contact, reposition the child restraint using the instructions that came with the child restraint. If there is still contact, use another seating position or child restraint.

   Try to pull the belt out of the retractor to make sure the retractor is locked. If the retractor is not locked, repeat Steps 5 and 6.

7. Before placing a child in the child restraint, make sure it is securely held in place. To check, firmly grip the child restraint at the seat belt path and attempt to move it side to side and back and forth. When the child restraint is properly installed, there should be no more than 2.5 cm (1 in) of movement.

If the airbag is off, the OFF indicator in the passenger airbag status indicator will come on and stay on when the vehicle is started.

If a child restraint has been installed and the ON indicator is lit, see “If the On Indicator Is Lit for a Child Restraint” under *Passenger Sensing System* ⇨ *59*.

To remove the child restraint, unbuckle the vehicle seat belt and let it return to the stowed position.

NOT FOR RESALE



# Storage

**Storage Compartments**
Storage Compartments ..... 84
Glove Box ..... 84
Cupholders ..... 84
Sunglasses Storage ..... 84
Center Console Storage ..... 85
**Additional Storage Features**
Cargo Tie-Downs ..... 85
Cargo Management System ..... 85
**Roof Rack System**
Roof Rack System ..... 88

## Storage Compartments

**⚠ Warning**

Do not store heavy or sharp objects in storage compartments. In a crash, these objects may cause the cover to open and could result in injury.

### Glove Box



Pull up on the glove box lever to open it.

### Cupholders

There are two cupholders in the front of the center console and two on the rear of the center console.

### Sunglasses Storage



Sunglasses storage is on the overhead console. Press the cover and release to access.

NOT FOR RESALE



## Center Console Storage



The center console has storage under the armrest. Press the button and lift to open.

# Additional Storage Features

## Cargo Tie-Downs



There are four cargo tie-downs in the rear compartment.

## Cargo Management System

| Caution |
| --- |
| The cargo bin can be damaged if the load floor is improperly removed or installed. Use care when removing and installing the load floor. |

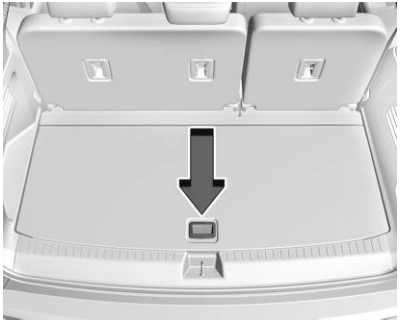

Lift the load floor to access the cargo management system.

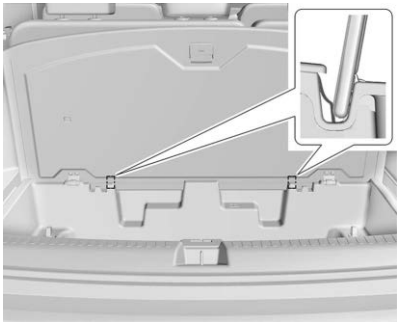

The hold open devices on the cargo bin allow the load floor to remain open without removal.

NOT FOR RESALE



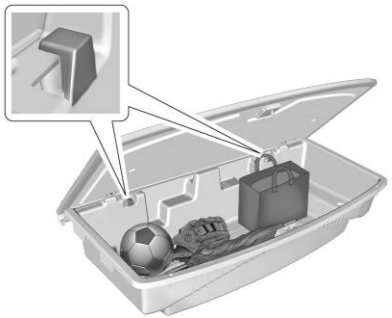

The cargo management system is used to organize storage in the cargo area. There are two convenience hooks that can support up to 5 kg (11 lb.).

After storing items in the cargo management system, make sure to properly latch the load floor.

### Removal Procedure

To access the spare tire, the cargo management system must be removed.



1. Remove the load floor. Open the load floor approximately 70% and pull upward and outward to release the two hooks from the rod affixed to the cargo management system.



2. Remove the four wing nuts.

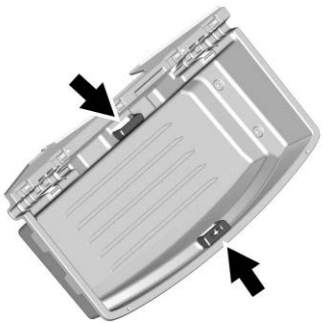

NOT FOR RESALE



3. Lift up on the handles on both sides to remove the cargo management system to access the spare tire.



4. The load floor and storage bin can be placed on the lowered third row seats while accessing the spare tire.

### Installation Procedure

**⚠ Warning**

An improperly latched cargo cover, or cargo cover left in the open position, could separate during a crash or sudden

(Continued)

**Warning (Continued)**

maneuver potentially impacting vehicle occupants. Someone could be injured. Be sure to return the cover to the closed position and latch before driving.

1. Install the cargo management system in the vehicle.



2. Install the four wing nuts.

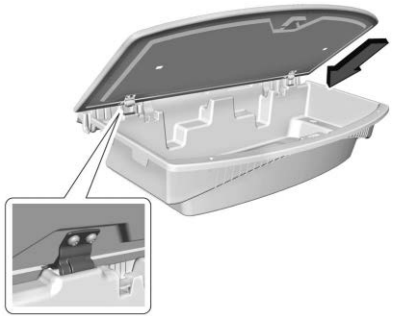

3. Angle the load floor approximately 70%, align the two hooks on the load floor above the rod, and push the load floor until the hooks engage the cargo bin rod.

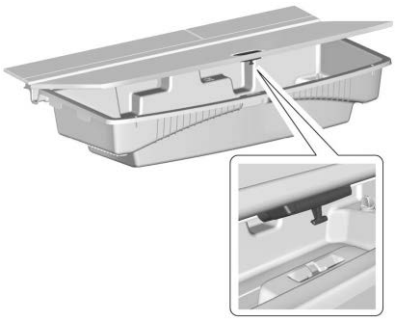

NOT FOR RESALE



4. Make sure to properly latch the load door.

## Roof Rack System

**⚠ Warning**

Before driving and occasionally during a trip, check that cargo is securely fastened, rests evenly between the cross rails and does not block the vehicle's lights or windows. Never load cargo directly on the roof of the vehicle or allow cargo to hang over the rear or sides of the vehicle. Never load cargo without first properly installing cross rails and other accessories designed to carry cargo. Personal injury, death or damage to the vehicle or other property may occur.

The vehicle may be equipped with side-rails for a roof rack system. Cargo must be secured with properly installed cross rails and other accessories designed to carry cargo. These can be purchased from your dealer.

If driving for a long distance, on rough roads, or at high speeds, occasionally stop the vehicle to make sure the cargo remains in its place.

### Cargo Weight Limits

**⚠ Warning**

Never load the roof rack with more weight than specified in this section. Loading cargo on the roof rack will make the vehicle's center of gravity higher. To avoid losing control of the vehicle, avoid overloading, high speeds, sudden starts, sharp turns, sudden braking, or abrupt maneuvers when carrying cargo on the roof rack.

Do not exceed the maximum cargo weight for the roof rack system, including the weight of the cross rails and any other accessories used to carry the cargo such as bike racks or roof boxes. The maximum cargo weight that can be loaded onto the roof rack system is 100 kg (220 lb) or the weight designated in the instructions that came with the cross rails or other roof rack accessories, whichever is less.

The weight of any cargo carried on the roof rack system must be included in calculating the loaded weight of the vehicle. Do not exceed the maximum vehicle capacity when loading the vehicle, including cargo carried on the roof rack system and passengers and cargo carried in the vehicle. For more information on vehicle capacity and loading, see *Vehicle Load Limits* ⇨ *172*.

NOT FOR RESALE



# Instruments and Controls


**Controls**

Steering Wheel Adjustment ....90
Heated Steering Wheel .... 90
Horn .... 91
Windshield Wiper/Washer ....91
Rear Window Wiper/Washer .... 92
Compass .... 93
Clock .... 93
Power Outlets .... 93
Wireless Charging ....94

**Warning Lights, Gauges, and Indicators**

Warning Lights, Gauges, and Indicators ...96
Instrument Cluster .... 97
Speedometer .... 98
Odometer .... 98
Trip Odometer .... 98
Tachometer .... 98
Fuel Gauge ....99
Engine Coolant Temperature Gauge ..... 99
Seat Belt Reminders .... 100
Airbag Readiness Light ....101
Passenger Airbag Status Indicator .... 101
Charging System Light ....102
Malfunction Indicator Light (Check Engine Light) .... 102
Brake System Warning Light ....104
Electric Parking Brake Light ....104
Service Electric Parking Brake Light ....104
Antilock Brake System (ABS) Warning Light .... 105
All-Wheel-Drive Light ....105
Automatic Vehicle Hold (AVH) Light .... 105
Lane Keep Assist (LKA) Light ....105
Automatic Emergency Braking (AEB) Disabled Light ....106
Vehicle Ahead Indicator ....106
Pedestrian Ahead Indicator ....106
Traction Off Light .... 106
Traction Control System (TCS)/ Electronic Stability Control Light .... 107
Electronic Stability Control (ESC) Off Light .... 107
Engine Coolant Temperature Warning Light .... 107
Driver Mode Control Light ....108
Tire Pressure Light ....108
Engine Oil Pressure Light ....109
Low Fuel Warning Light ....109
Auto Stop Indicator ....109
Security Light ....109
High-Beam On Light .... 110
Lights On Reminder ....110
Cruise Control Light .... 110
Adaptive Cruise Control Light ....110
Super Cruise Light .... 111
Door Ajar Light ....111

**Information Displays**

Driver Information Center (DIC) ....111
Vehicle Status ....113
Head-Up Display (HUD) ....115

**Vehicle Messages**

Vehicle Messages ....116
Engine Power Messages ....117
Vehicle Speed Messages .... 117

**Universal Remote System**

Universal Remote System Programming (Garage Door Opener) .....117
Universal Remote System Operation (Garage Door Opener) ....119

NOT FOR RESALE



# Controls

## Steering Wheel Adjustment



**Manual Steering Wheel**

To adjust the steering wheel, if equipped:

1. Pull the lever down.
2. Move the steering wheel up or down.
3. Pull or push the steering wheel closer or away from you.
4. Pull the lever up to lock the steering wheel in place.

Do not adjust the steering wheel while driving.



**Power Tilt and Telescoping Steering Wheel**

To adjust the steering wheel, if equipped:

1. Press the control up or down to tilt the steering wheel up or down.
2. Press the control forward or rearward to move the steering wheel closer or away from you.

Do not adjust the steering wheel while driving.

## Heated Steering Wheel

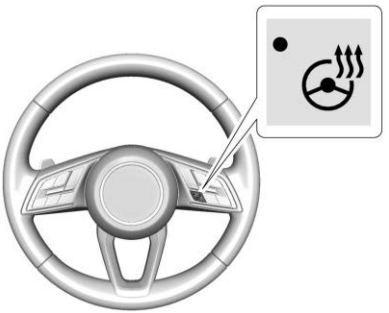

**:** If equipped with a heated steering wheel, press to turn on or off. A light near the button displays when the feature is turned on.

The steering wheel takes about three minutes to reach maximum heat.

**Automatic Heated Steering Wheel**

If equipped with auto heated seats, the heated steering wheel may turn on when the auto heated seat is activated. The heated steering wheel indicator will display the state of the steering wheel heat.

See *Heated and Ventilated Front Seats* ⇨ *39*.

NOT FOR RESALE



## Horn

Press on the steering wheel pad to sound the horn.

## Windshield Wiper/Washer

**Warning**

In freezing weather, do not use the washer until the windshield is warmed. Otherwise the washer fluid can form ice on the windshield, blocking your vision.

**Warning**

Before driving the vehicle, always clear snow and ice from the hood, windshield, washer nozzles, roof, and rear of the vehicle, including all lights and windows. Reduced visibility from snow and ice buildup could lead to a crash.

If equipped with Rainsense, a sensor near the top center of the windshield detects the amount of water on the windshield and controls the frequency of the windshield wiper based on the current sensitivity setting. Keep this area of the windshield clear of debris to allow for best system performance.

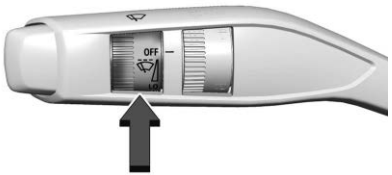


With the vehicle on, turn the band to select the wiper speed.

**OFF:** Use to turn the wipers off.

**LO:** Use for slow wipes.

**HI:** Use for fast wipes.

Turn the band to select the frequency of intermittent wipes between OFF and LO.

Clear snow and ice from the entire windshield and wiper blades before using them. If frozen to the windshield, carefully loosen or thaw them. Damaged blades should be replaced. See *Wiper Blade Replacement* ⇨ *266*.

Heavy snow or ice may restrict wiper operation and can overload the wiper motor.

**Wiper Arm Assembly Protection**

When using an automatic car wash, move the windshield wiper lever to OFF. This disables the automatic Rainsense windshield wipers.

With Rainsense, if the vehicle is in N (Neutral) and the speed is very slow, the wipers will automatically stop at the base of the windshield.

The wiper operations return to normal when the vehicle is no longer in N (Neutral) or the vehicle speed has increased.

### Windshield Washer



> : Push the button on the side of the windshield wiper lever to the first detent to activate the wipers.

NOT FOR RESALE



≫ : Push the button on the side of the windshield wiper lever to the second detent to spray washer fluid and activate the wipers. When the button is released, additional wipes may occur depending on how long the windshield washer had been activated.

See *Washer Fluid* ⇨ *262* for information on filling the windshield washer fluid reservoir.

**Wiper Parking**

If the vehicle is off while the wipers are on LO or HI, they will immediately stop.

If the windshield wiper band is then turned to OFF before the driver door is opened or within 10 minutes, the wipers will restart and move to the base of the windshield.

If the vehicle is off while the wipers are performing wipes due to windshield washing or Rain Sense, the wipers continue to run until they reach the base of the windshield.

**Heated Wiper Parking**

If equipped, this feature warms the lower area of the windshield where the wiper blades park when the rear window defogger is on, helping to remove frost from the wipers.

: The rear window defogger button is on the climate control panel.

See "Rear Window Defogger" under *Dual Automatic Climate Control System* ⇨ *157*.

## Rear Window Wiper/Washer

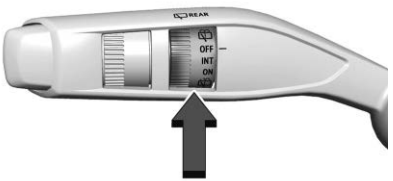


The rear window wiper/washer controls are on the end of the windshield wiper lever.

Turn the controls to adjust the setting.

**OFF:** Turns the wiper off.

**INT:** Turns on the rear wiper with a delay between wipes.

**ON:** Turns on the rear wiper.

: Turn the band to to spray washer fluid on the rear window and Rear Camera Mirror, if equipped. Release the band when done.

The windshield washer reservoir is used for the windshield, rear window, and Rear Camera Mirror. See *Rear Camera Mirror* ⇨ *26*. Check the fluid level in the reservoir if either washer is not working. See *Washer Fluid* ⇨ *262* for information on filling the windshield washer fluid reservoir.

The rear window wiper/washer will not operate if the liftgate is open or ajar. If the liftgate is opened while the rear wiper is on, the wiper returns to the parked position and stops.

**Rear Wiper Arm Assembly Protection**

When using an automatic car wash, move the rear wiper control to OFF to disable the rear wiper. In some vehicles, if the transmission is in N (Neutral) and the vehicle speed is very slow, the rear wiper will automatically park under the rear spoiler.

The wiper operations return to normal when the transmission is no longer in N (Neutral) or the vehicle speed has increased.

**Auto Wipe in Reverse Gear**

If the rear wiper control is off, the rear wiper will automatically operate continuously when the transmission is in R (Reverse), and the front windshield wiper is performing low or high

NOT FOR RESALE



speed wipes. If the rear wiper control is off, the transmission is in R (Reverse), and the front windshield wiper is performing INT wipes, then the rear wiper automatically performs INT wipes.

This feature can be turned on or off. See “Auto Wipe in Reverse Gear” under Settings > Vehicle > Comfort and Convenience > Auto Wipe in Reverse Gear.

## Compass

The vehicle may have a compass display on the Driver Information Center. The compass receives its heading and other information from the Global Positioning System (GPS) antenna, StabiliTrak/Electronic Stability Control, and vehicle speed information.

The compass system can operate for a limited distance or degrees of turn before needing an update from the GPS satellites. When the compass display shows CAL, drive the vehicle to a clear, unobstructed view of the sky in all directions. The system will automatically search for a GPS signal and provide a heading again when the link to the satellites is re-established.

## Clock

Set the time and date using the infotainment system. See "Date/Time" under *Settings* ⇨ *149*.

## Power Outlets

**Power Outlets 12-Volt Direct Current**

**⚠ Warning**

Power is always supplied to the rear cargo power outlet. Do not leave electrical equipment plugged in when the vehicle is not in use because the vehicle could catch fire and cause injury or death.

**Caution**

Leaving electrical equipment plugged in for an extended period of time while the ignition is off will drain the battery. Always unplug electrical equipment when not in use and do not plug in equipment that exceeds the maximum 15 amp rating.

**Caution**

Hanging heavy equipment from the power outlet can cause damage not covered by the vehicle warranty. The power outlets are designed for accessory power plugs only, such as cell phone charge cords.

The vehicle is equipped with 12-volt outlets that can be used to plug in electrical equipment, such as a cell phone or MP3 player.

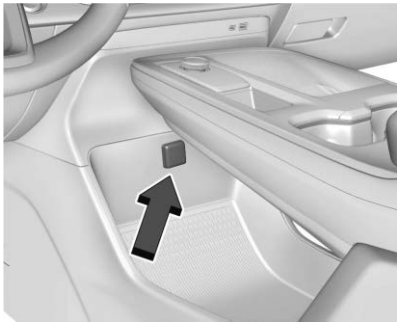

The power outlets are located:

- Inside the center console front storage compartment.
- In the rear cargo area.

NOT FOR RESALE



Lift the cover to access the outlet and replace when not in use.

There are also charging only USB ports on the rear of the center console.

Certain accessory plugs may not be compatible with the accessory power outlet and could overload vehicle and adapter fuses. If a problem is experienced, see your dealer.

When adding electrical equipment, be sure to follow the proper installation instructions included with the equipment. See *Add-On Electrical Equipment* ⇨ *248*.

### Power Outlet 110-V Alternating Current

If equipped, this power outlet can be used to plug in electrical equipment that uses a maximum limit of 150 watts.



The power outlet is on the rear of the center console.

An indicator light on the outlet turns on to show it is in use. The light comes on when the ignition is on, equipment requiring less than 150 watts is plugged into the outlet, and no system fault is detected.

The indicator light does not come on when the ignition is off or if the equipment is not fully seated into the outlet.

If equipment is connected using more than 150 watts or a system fault is detected, a protection circuit shuts off the power supply and the indicator light turns off. To reset the circuit, unplug the item and plug it back in or turn the Retained Accessory Power (RAP) off and then back on. See *Retained Accessory Power (RAP)* ⇨ *180*. The power restarts when equipment using 150 watts or less is plugged into the outlet and a system fault is not detected.

The power outlet is not designed for the following and may not work properly if they are plugged in:

- Equipment with high initial peak wattage, such as compressor-driven refrigerators and electric power tools
- Other equipment requiring an extremely stable power supply, such as microcomputer-controlled electric blankets and touch sensor lights
- Medical equipment

## Wireless Charging

**⚠ Warning**

Wireless charging may affect the operation of an implanted pacemaker or other medical devices. If you have one, it is recommended to consult with your doctor before using the wireless charging system.

NOT FOR RESALE



**⚠ Warning**

Always keep the wireless charging surface and the back of the phone case clear of coins, keys, rings, paper clips, cards and other objects. The system may not detect the presence of these objects, which could become very hot and cause burns. Remove the phone and allow to cool completely before handling.

**Caution**

Vehicle key cards, credit cards, hotel key cards, and other Near Field Communication (NFC) cards may be damaged if placed on the charging surface.

If equipped and enabled, the vehicle has a wireless charging pad in the storage bin at the front of the floor console. The system operates at 127.7 kHz and can charge one Qi 1.x compatible smartphone per charger at a rate of up to 3 amp (15 W).

To begin charging, the vehicle must be on or Retained Accessory Power must be active. The wireless charging feature may not correctly indicate charging when the vehicle is in Retained Accessory Power, during a Bluetooth phone call, or when phone projection is active See *Retained Accessory Power (RAP)* ⇨ *180*.

The operating temperature is −40 °C (−40 °F) to 85 °C (185 °F) for the charging system and 0 °C (32 °F) to 35 °C (95 °F) for the phone. An alert will display on the infotainment screen if the wireless charger or smartphone are outside of normal operating temperature. Charging will automatically resume when a normal operating temperature is reached.

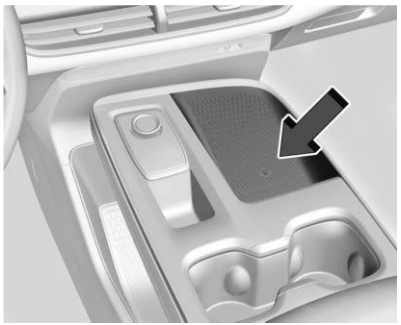

To charge a compatible smartphone:

1. Remove all objects from the charging pad. The system may not charge if there are any objects between the smartphone and charger.
2. Place the smartphone face up against the charger.

   To maximize the charge rate, ensure the smartphone is fully seated and centered in the holder with nothing under it.

   A smartphone case may prevent the charger from working, or reduce the charging performance. Be sure the smartphone case is compatible with wireless charging and the back side of the phone is clear of cards and metal objects.
3. A green ⚡ will appear on the infotainment display, next to the phone icon. This indicates that the smartphone is detected.

The smartphone may become warm during charging. This is normal. In warmer temperatures, the speed of charging may be reduced.

NOT FOR RESALE



### Troubleshooting Wireless Charging

If a smartphone is placed on the charger and ⚡ turns off or turns yellow, remove the smartphone and any objects from the pad. Turn the smartphone 180 degrees and wait a few seconds before placing/aligning it on the pad again.

If a smartphone is placed on the charger and ⚡ turns red, the charger and/or the smartphone is overheated. Remove the smartphone and any objects from the charger in order to cool the system.

For vehicles with wireless phone projection, the smartphone may overheat during wireless charging. The smartphone may slow down, stop charging, or shut down to protect the battery. The phone may need to be removed from its case to prevent overheating. The ⚡ may flash while the phone is cooling down enough for wireless charging to automatically resume. This is normal. Individual phone performance may vary.

Certain vehicle and smartphone accessories may not be compatible with the wireless charging system. See your dealer for additional information.

## Warning Lights, Gauges, and Indicators

Warning lights, gauges, and indicators can alert you to an issue with your vehicle. Some warning lights display briefly to show that they are working when you start the vehicle. However, if a warning light persists while driving, or if a gauge shows there may be a problem, be sure to refer to the sections under "Warning Lights, Gauges, and Indicators."

Paying attention to your vehicle's warning lights, gauges, and indicators and promptly addressing any issues may help you to prevent an expensive repair or personal injury. Postponing repairs can be costly and even dangerous.

NOT FOR RESALE



## Instrument Cluster

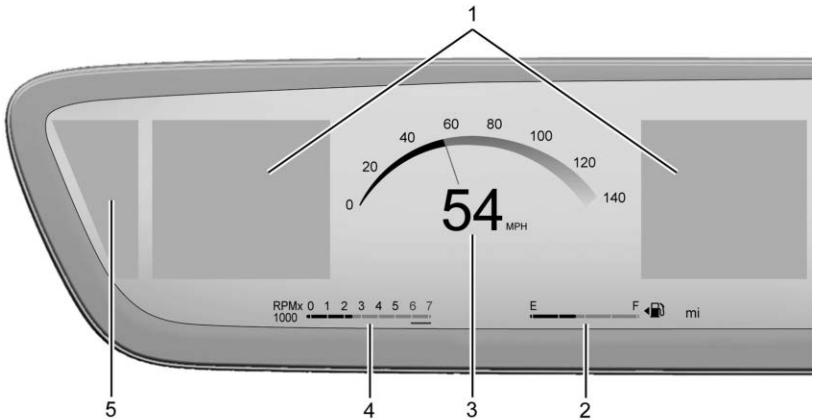


**English Tour Mode Shown, Others and Metric Similar**

1. Driver Information Center. See *Driver Information Center (DIC)* ⇨ *111*.
2. Fuel Gauge. See *Fuel Gauge* ⇨ *99*.
3. Speedometer. See *Speedometer* ⇨ *98*.
4. Tachometer. See *Tachometer* ⇨ *98*. Engine Coolant Temperature Gauge. See *Engine Coolant Temperature Gauge* ⇨ *99*.
5. Control Panel. See "Control Panel" later in this section.

### Reconfigurable Instrument Cluster

The instrument cluster display layout can be changed. Some of the selectable views may not be available for your particular vehicle.

The following are selectable views:

**Tour:** Displays the speedometer in the center of the display. The fuel gauge is located on the right of the speedometer and the tachometer is on the left of it. There are two DIC areas on the left and right of the display.

**Clean:** If equipped, displays no information zones.

**Map:** Displays a navigation map.

**Sport:** If equipped, displays the speedometer above the tachometer in the center of the display. The fuel gauge is located on the right of the speedometer and the engine coolant temperature gauge is on the left of it. There are two DIC areas on the left and right of the display.

**Driver Assistance:** If equipped, displays information for Super Cruise, Adaptive Cruise Control, Follow Distance, Lane Keep Assist, and Forward Collision Alert. There is one information zone to the right of the display.

NOT FOR RESALE



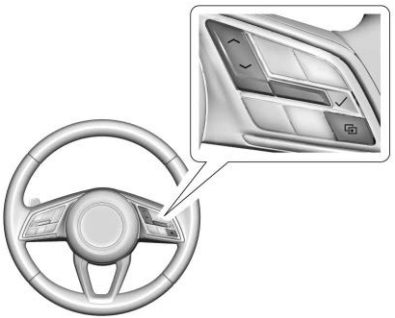

Use the right steering wheel control to open and scroll through the different items and displays.

To change the cluster configuration, press on the right steering wheel control.

If equipped, to change the gauge faces, press ∧ or ∨ on the right steering wheel control.

Press ✓ on the right steering wheel control to select the desired option from the list.

Selecting a different view could hide the vehicle status that is displayed in the information zones on the cluster. Once a view with information zones is selected the vehicle status that was last selected will then be displayed. See *Driver Information Center (DIC)* ⇨ *111* and *Vehicle Status* ⇨ *113*.

### Control Panel

There is a touchscreen to the left of the instrument cluster. Use it for the following:

#### Head-Up Display (HUD)

If equipped, touch ADJUST HUD to select the height, brightness, and rotation of the head-up display. See *Head-Up Display (HUD)* ⇨ *115*.

### Display Settings

Turn the following options on or off using the infotainment display. Some may not be available for your vehicle. See *Settings* ⇨ *149*.

#### Speed Sign

Shows sign information from a roadway database in the onboard navigation. The sign will show "– –" when there is no detected speed limit or the system is unavailable.

#### Turn-by-Turn Graphics

Provides Turn-by-Turn navigation graphics during an active route in your driver display.

#### Traffic Sign Recognition

Displays the detected speed limit in your driver display.

## Speedometer

The speedometer shows the vehicle speed in either kilometers per hour (km/h) or miles per hour (mph).

## Odometer

The odometer displays the distance the vehicle has been driven, in either kilometers or miles.

## Trip Odometer

The trip odometer displays the distance the vehicle was driven since the trip odometer was last reset.

Access and reset the trip odometer through the Vehicle Status. See *Vehicle Status* ⇨ *113*.

## Tachometer

The tachometer displays the engine speed in revolutions per minute (rpm) when the engine is on.

NOT FOR RESALE



During Auto Stop mode, the tachometer may vary by several hundred rpm when the engine is shutting off and restarting.

## Fuel Gauge

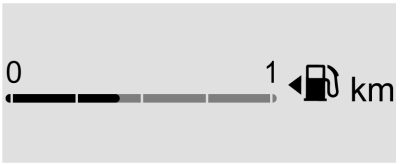


**Metric**




**English**

When the ignition is on, the fuel gauge displays the remaining fuel in the tank.

There is an arrow near the fuel gauge pointing to the side of the vehicle the fuel door is on.

When the gas tank nears empty, the low fuel light indicates you should refuel the vehicle soon.

The fuel gauge may exhibit the following normal conditions, none of which indicate a problem with the gauge:

- Show an approximate measurement. For example, the gauge may show half a tank, but it could actually take a little more or less than half the tank's capacity to fill the tank.
- Move a little while driving on a hill, turning a corner, speeding up, or braking.
- Take time to stabilize after the ignition is turned on and return to empty when the ignition is turned off.

### Fuel Range

The estimated fuel range displays near the fuel gauge. The fuel range shows the approximate distance the vehicle can be driven without refueling. This estimate uses the vehicle's average fuel economy from recent driving history and the amount of fuel remaining in the tank.

When the estimated fuel range is low, the range shows LOW and a message may also display in the Driver Information Center.

## Engine Coolant Temperature Gauge

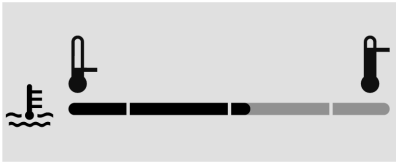

**Metric**




**English**

If equipped, this gauge displays the engine coolant temperature.

If the gauge pointer moves into the high end, the engine has overheated.

Under normal driving conditions, pull off the road, stop the vehicle, and turn off the engine as soon as possible. See *Engine Overheating* ⇨ *261*.

NOT FOR RESALE



## Seat Belt Reminders

### Driver Seat Belt Reminder Light

There is a driver seat belt reminder light on the instrument cluster.



When the vehicle is started, or if the driver remains or becomes unbuckled while the vehicle is moving, this light flashes and an audible alert sounds to alert the driver to fasten their seat belt. The light may then display solid until the driver seat belt is buckled. This cycle may continue several times or continuously until the driver seat belt is buckled. If the driver seat belt is buckled, the light will not display and audible alert will not sound.

### Front Passenger Seat Belt Reminder Light

This vehicle may have a front passenger seat belt reminder light near the passenger airbag status indicator. See *Passenger Sensing System* ⇨ *59*.



When the vehicle is started, or if the front passenger remains or becomes unbuckled while the vehicle is moving, this light flashes and an audible alert may sound to alert the front passenger to fasten their seat belt. The light may then display solid until the front passenger seat belt is buckled. This cycle may continue several times or continuously until the front passenger seat belt is buckled. If the front passenger seat belt is buckled, the light will not display and the audible alert will not sound.

Alerts may occur if an object, such as a briefcase, handbag, grocery bag, laptop, or other electronic device, is on the front passenger seat. To turn off the reminder light and/or audible alert, remove the object from the seat or buckle the seat belt.

### Second and Third Row Passenger Seat Belt Reminder Light

This vehicle may have second and third row passenger seat belt reminder lights.



When the vehicle is started and not moving, and if a rear passenger has not buckled their seat belt, the light will display solid. If a rear passenger remains or becomes unbuckled while the vehicle is moving, this light may flash and an audible alert may sound to alert the driver that a rear passenger needs to fasten their seat belt.

An ✕ indicates the seat belt is not buckled. A ✓ indicates the seat belt is buckled.

For information on the front seat belt reminder lights, see "Driver Seat Belt Reminder Light" and "Front Passenger Seat Belt Reminder Light" listed previously.

Alerts may occur if an object, such as a briefcase, handbag, grocery bag, laptop, or other electronic device, is on the rear passenger

NOT FOR RESALE



seats. To turn off the reminder light and/or audible alert, remove the object from the seat or buckle the seat belt.

## Airbag Readiness Light

**⚠ Warning**

If the airbag readiness light stays on after the vehicle is started or comes on while driving, it means the airbag system might not be working properly. The airbags in the vehicle might not inflate in a crash, or they could even inflate without a crash. To help avoid injury, have the vehicle serviced right away.

This light shows if there is an electrical problem with the airbag system. It is located in the instrument cluster. The system check includes the airbag sensor(s), the passenger sensing system, the pretensioners, the airbag modules, the wiring, and the crash sensing and diagnostic module. For more information on the airbag system, see *Airbag System* ⇨ *54*.



The airbag readiness light comes on for several seconds when the vehicle is started. If the light does not come on then, have it fixed immediately.

If there is a problem with the airbag system, a Driver Information Center (DIC) message may also come on.

## Passenger Airbag Status Indicator

**⚠ Warning**

If the airbag readiness light ever comes on and stays on, it means that something may be wrong with the airbag system. To help avoid injury to yourself or others, have the vehicle serviced right away. See *Airbag Readiness Light* ⇨ *101* for more information, including important safety information.

The vehicle has a passenger sensing system. See *Passenger Sensing System* ⇨ *59* for important safety information. The overhead console has a passenger airbag status indicator.




The passenger airbag status indicator may include text and/or symbols to indicate the passenger frontal airbag is either On or Off.

When the vehicle is started, the passenger airbag status indicator will light both the On and Off indicators for several seconds as a system check.

Then, after several more seconds, the passenger airbag status indicator for either On or Off will be lit to let you know the status of the front outboard passenger frontal airbag.

If the status indicator for On is lit on the passenger airbag status indicator, it means that the front outboard passenger frontal airbag is allowed to inflate.

NOT FOR RESALE



If the status indicator for Off is lit on the passenger airbag status indicator, it means that the passenger sensing system has turned off the front outboard passenger frontal airbag.

If after several seconds both status indicator lights remain on, or if there are no lights at all, or if the airbag readiness light is on, there may be a problem with the lights or the passenger sensing system. See your dealer for service right away.

## Charging System Light

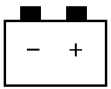


This light displays briefly when you start your vehicle. This is a normal test your vehicle runs on start up.

If the light stays on or displays while driving, there could be a problem with the electrical charging system. Have it checked by your dealer. Driving while this light is on could drain the 12-volt battery.

If you must drive a short distance with the light on, turn off all accessories, such as the radio, to save battery power. Find a safe place to stop the vehicle.

## Malfunction Indicator Light (Check Engine Light)



| Caution |
| --- |
| If the vehicle is driven continually with this light on, the emission control system may not work as well, the fuel economy may be lower, and the vehicle may not run smoothly. This could lead to costly repairs that might not be covered by the vehicle warranty. |

| Caution |
| --- |
| Modifications to the engine, transmission, exhaust, intake, or fuel system, or the use of replacement tires that do not meet the original tire specifications, can cause this light to come on. This could lead to costly repairs not covered by the vehicle warranty. This could also affect the vehicle's ability to pass an Emissions Inspection/Maintenance test. See *Accessories and Modifications* ⇨ *250*. |

This light displays briefly when you start your vehicle. This is a normal test your vehicle runs on start up. If it does not display, see your dealer for service.

The light is part of emission control on-board diagnostic system of the vehicle. If this light stays on or displays while driving, a malfunction is present, and the vehicle may require service. See *Ignition Positions* ⇨ *176*.

The system often shows malfunctions before any problem is noticeable. Being aware of the light and seeking service promptly when it displays may prevent damage.

NOT FOR RESALE



**If the light is flashing:** A malfunction has been detected that could damage the emission control system and increase vehicle emissions. Diagnosis and service may be required. See your dealer.

To help prevent damage, reduce vehicle speed, and avoid hard accelerations and uphill grades. If towing a trailer, reduce the amount of cargo being hauled as soon as possible.

If the light continues to flash, find a safe place to park. Turn the vehicle off and wait at least 10 seconds before restarting the engine. If the light is still flashing, follow the previous guidelines under "If the light is flashing," and see your dealer for service as soon as possible.

**If the light is on steady:** A malfunction has been detected. Diagnosis and service may be required. See your dealer.

Check the following:

- If fuel has been added to the vehicle using the capless funnel adapter, make sure that it has been removed. See "Filling the Tank with a Portable Gas Can" under *Filling the Tank* ⇨ *245*. The diagnostic system can detect if the adapter has been left installed in the vehicle, allowing fuel to evaporate into the atmosphere. A few driving trips with the adapter removed may turn off the light.
- Poor fuel quality can cause inefficient engine operation and poor drivability, which may go away once the engine is warmed up. If this occurs, change the fuel brand. It may require at least one full tank of the proper fuel to turn the light off. See *Recommended Fuel* ⇨ *244*.

If the light remains on, see your dealer.

### Emissions Inspection and Maintenance Programs

If the vehicle requires an Emissions Inspection/Maintenance test, the test equipment can be used to connect to the vehicle's Data Link Connector.

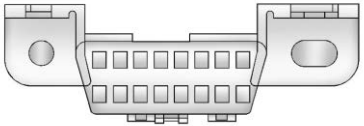

The Data Link Connector is under the instrument panel to the left of the steering wheel. Connecting devices that are not used to perform an Emissions Inspection/Maintenance test or to service the vehicle may affect vehicle operation. See *Add-On Electrical Equipment* ⇨ *248*. See your dealer if assistance is needed.

The vehicle may not pass inspection if:

- The Malfunction Indicator Light displays when the engine is running
- The light does not display when the ignition is on while the engine is off.
- Critical emission control systems have not been completely diagnosed. If this happens, the vehicle would not be ready for inspection and might require several days of routine driving before the system is ready for inspection. This can happen if the 12-volt battery has recently been replaced or run down, or if the vehicle has been recently serviced.

NOT FOR RESALE



See your dealer if the vehicle will not pass or cannot be made ready for the test.

## Brake System Warning Light



BRAKE

**Metric** **English**

**⚠ Warning**

The brake system might not be working properly if the brake system warning light is on. Driving with the brake system warning light on can lead to a crash. If the light is still on after the vehicle has been pulled off the road and carefully stopped, have the vehicle towed for service.

This light displays briefly when you start your vehicle. This is a normal test your vehicle runs on startup. If it does not display, see your dealer for service.

If the light stays on, have the brake system inspected immediately. This light may display if the brake fluid is low. See *Brake Fluid* ⇨ *264*.

If the light displays while driving, pull off the road and stop carefully. The brake system has electric brake boost. Vehicle speed may be limited when the brake system warning light displays. The brake pedal might be harder to push, or the brake pedal may go closer to the floor. It could take longer to stop. If the light is still on, have the vehicle towed for service. See *Transporting a Disabled Vehicle* ⇨ *307*.

## Electric Parking Brake Light



PARK

**Metric** **English**

This light displays when the Electric Parking Brake is applied. If the light flashes after the Electric Parking Brake is released, or while driving, there is a problem with the Electric Parking Brake system. A message may also display in the Driver Information Center.

If the light does not display, or remains flashing, see your dealer.

## Service Electric Parking Brake Light



This light may display briefly when you start your vehicle. This is a normal test your vehicle runs on start up. If it does not display, see your dealer for service.

If this light stays on or displays while driving, there is a problem with the electric parking brake. Take the vehicle to a dealer as soon as possible. In addition to the parking brake, other safety functions that use the electric parking brake may also be affected. A message may also display in the Driver Information Center. See *Electric Parking Brake* ⇨ *186*.

NOT FOR RESALE



## Antilock Brake System (ABS) Warning Light




This light displays briefly when you start your vehicle. This is a normal test your vehicle runs on start up. If it does not display, see your dealer for service.

When the Antilock Brake System (ABS) detects a problem, the warning light displays and stays on, and you may hear an audible alert. Your vehicle brakes will still function, but your Antilock Brake System (ABS) is not functioning as expected. See your dealer for service.

If this warning light and the brake system warning light are displayed, your Antilock Brake System (ABS) and your regular brakes are not functioning as expected. See your dealer for service.

See *Brake System Warning Light* ⇨ *104*.

## All-Wheel-Drive Light




**All-Wheel Drive Light**




**Front-Wheel Drive Light**

If equipped, the corresponding light displays when an All-Wheel Drive mode or Front-Wheel Drive mode is selected. See *All-Wheel Drive* ⇨ *185*.

If the light displays amber, there may be a malfunction. See your dealer.

## Automatic Vehicle Hold (AVH) Light




This light displays when Automatic Vehicle Hold is enabled and turns green when Automatic Vehicle Hold is actively holding the vehicle. See *Automatic Vehicle Hold (AVH)* ⇨ *188*.

## Lane Keep Assist (LKA) Light



If equipped, the Lane Keep Assist Light may display the following colors:

- White: Displays when the vehicle starts. A steady white light indicates that Lane Keep Assist is unable to assist.
- Green: Displays when Lane Keep Assist is turned on and ready to assist. Lane Keep Assist will gently turn the steering wheel if the vehicle approaches a detected lane marking.
- Amber: Displays when Lane Keep Assist is active. The light flashes amber as a Lane Departure Warning alert indicating that a lane marking has been unintentionally

NOT FOR RESALE



crossed. If the system detects you are steering intentionally (to pass or change lanes), the Lane Departure Warning alert may not display. The amber light also displays when the Blind Zone Steering Assist detects a potential crash with a moving vehicle in the lane you are entering. See *Blind Zone Steering Assist (BZSA)* ⇨ *238*.

Lane Keep Assist will not assist or alert if the turn signal is active in the direction of lane departure, or if Lane Keep Assist detects that you are accelerating, braking, or actively steering. See *Lane Keep Assist (LKA)* ⇨ *241*.

## Automatic Emergency Braking (AEB) Disabled Light



This indicator displays when you turn off Automatic Emergency Braking or Front Pedestrian Braking.

This indicator also displays if Automatic Emergency Braking or Front Pedestrian Braking are unavailable due to malfunction, weather conditions, or a dirty windshield.

See *Automatic Emergency Braking (AEB)* ⇨ *230*.

See *Front Pedestrian Braking (FPB) System* ⇨ *234*.

## Vehicle Ahead Indicator



If equipped, this indicator displays green when a vehicle is detected ahead and amber if you are following a vehicle too closely.

See *Forward Collision Alert (FCA) System* ⇨ *228*.

## Pedestrian Ahead Indicator



If equipped, this indicator displays amber when a pedestrian is detected in front of the vehicle.

See *Front Pedestrian Braking (FPB) System* ⇨ *234*.

## Traction Off Light




This light displays briefly when you start your vehicle. This is a normal test your vehicle runs on start up. If it does not display, see your dealer for service.

The traction off light displays when the Traction Control System has been turned off. When StabiliTrak/Electronic Stability Control is

NOT FOR RESALE



turned off, the Traction Control System is also turned off. To turn the Traction Control System and StabiliTrak/Electronic Stability Control off and on, see *Traction Control/Electronic Stability Control* ⇨ *188*.

If the Traction Control System is off, wheel slip does not limit acceleration unless necessary to help protect the driveline from damage. Adjust your driving accordingly.

## Traction Control System (TCS)/ Electronic Stability Control Light



This light displays briefly when you start your vehicle. This is a normal test your vehicle runs on startup. If it does not display, see your dealer for service.

The light flashes when the Traction Control System and/or the StabiliTrak/Electronic Stability Control System is actively working.

If the light is on and not flashing, the Traction Control System and StabiliTrak/Electronic Stability Control System may not be fully operational or able to assist maintaining control. Adjust your driving accordingly. If the condition persists, see your dealer as soon as possible. A message may display in the Driver Information Center.

See *Traction Control/Electronic Stability Control* ⇨ *188*.

## Electronic Stability Control (ESC) Off Light




This light displays briefly when you start your vehicle. This is a normal test your vehicle runs on start up. If it does not display, see your dealer for service.

This light displays when the StabiliTrak/ Electronic Stability Control system is turned off. When StabiliTrak/Electronic Stability Control is off, the Traction Control System is also off. To turn StabiliTrak/Electronic Stability Control off and on, see *Traction Control/ Electronic Stability Control* ⇨ *188*.

If StabiliTrak/Electronic Stability Control and the Traction Control System are off, the systems do not assist in controlling the vehicle. Adjust your driving accordingly.

## Engine Coolant Temperature Warning Light



| Caution |
| --- |
| The engine coolant temperature warning light indicates that the vehicle has overheated. Driving with this light on can damage the engine and it may not be covered by the vehicle warranty. See *Engine Overheating* ⇨ *261*. |

NOT FOR RESALE



This light briefly displays during vehicle startup as a normal test. If it does not display on startup, or if it stays lit, see your dealer for service.

If the light displays while driving, pull over and turn off the engine as soon as possible.

## Driver Mode Control Light



This light displays when you select Sport mode.



This light displays when you select Snow/Ice mode.



This light displays when you select Off-Road mode.



This light displays when you select the Tow/Haul mode.

See *Driver Mode Control* ⇨ *190*.

## Tire Pressure Light



If equipped with the Tire Pressure Monitor System, this light displays briefly when you start your vehicle. This is a normal test your vehicle runs on start up.

The light displays to indicate information about tire pressures and the Tire Pressure Monitor System.

**If the Light Stays On**

This indicates that one or more of the tires are significantly underinflated.

A Driver Information Center tire pressure message may also display. Stop as soon as possible and inflate the tires to the pressure value shown on the Tire and Loading Information label. See *Tire Pressure* ⇨ *285*.

**If the Light Flashes and Then Remains On**

If the light flashes for about a minute and then stays on, there may be a problem with the Tire Pressure Monitor System. If the problem is not corrected, the light will display every time the vehicle is started. See *Tire Pressure Monitor Operation* ⇨ *287*.

NOT FOR RESALE



## Engine Oil Pressure Light

| Caution |
| --- |
| Driving the vehicle with low engine oil pressure can damage the engine and the repairs would not be covered by the vehicle warranty.<br>If the engine oil pressure light comes on while driving:<br>1. Stop in a safe location and turn off the engine.<br>2. Check the oil level. See *Engine Oil* ⇨ *254*.<br>3. Add oil if the oil level is below the normal operating range.<br>4. Restart the vehicle. If the engine oil pressure light stays on for more than 10 seconds, turn the vehicle back off. Do not restart the vehicle. See your dealer for service. |



This light should display briefly when the engine starts. When the engine is off and the vehicle is on, the light should remain illuminated. If it does not display under either condition, contact your dealer.

If the light displays and stays on when the engine is running, it may not have adequate oil pressure. The oil level may be low or there may be some other oil system problem. Turn the engine off when it is safe to do so and contact your dealer.

## Low Fuel Warning Light



This light displays briefly when you start your vehicle. This is a normal test your vehicle runs on start up.

The light displays when the fuel tank is running low and it turns off when fuel is added. If it does not, see your dealer for service.

## Auto Stop Indicator



This light displays when Auto Stop is enabled.

See *Stop/Start System* ⇨ *178*.

## Security Light



NOT FOR RESALE



This light displays briefly when you start your vehicle. This is a normal test your vehicle runs on start up. If it does not display, see your dealer for service.

If the light stays on and the vehicle does not start, there could be a problem with the theft-deterrent system. See *Immobilizer Operation* ⇨ *24*.

## High-Beam On Light



This light displays when the high-beam headlights are in use. See *High-Beam Systems* ⇨ *122 High-Beam Systems* ⇨ *122*.

### Automatic High-Beam Light




If equipped, this light displays when the IntelliBeam system is enabled. See *High-Beam Systems* ⇨ *122 High-Beam Systems* ⇨ *122*.

## Lights On Reminder



This light displays when the exterior lights are in use. The light will not display when only the Daytime Running Lights are active. See *Headlight Controls* ⇨ *121*.

## Cruise Control Light



If equipped, this light displays white when cruise control is on and ready, and turns green when set and active.

The light turns off when cruise control is turned off. See *Adaptive Cruise Control (Advanced)* ⇨ *191*.

## Adaptive Cruise Control Light



If equipped, this light displays the Adaptive Cruise Control status.

See *Adaptive Cruise Control (Advanced)* ⇨ *191*.

### Curve Speed Control Light



If equipped, this light displays green when Adaptive Cruise Control is actively controlling the vehicle speed and detects a sharp curve on the road ahead.

NOT FOR RESALE



Adaptive Cruise Control automatically slows the vehicle down while navigating the curve, and may increase speed out of the curve without exceeding the set speed.

### Super Cruise Light



If equipped, this light displays the Super Cruise status. See *Super Cruise* ⇨ *201*.

### Door Ajar Light



This light displays when a door is open or not securely latched. Before driving, check that all doors are properly closed.

# Information Displays

## Driver Information Center (DIC)

Driver information is displayed in the instrument cluster. It shows the status of many vehicle systems.

Information is broken down into two main zones:

**Left Zone:** Displays on the instrument cluster to the left of the speedometer.

**Right Zone:** Displays on the instrument cluster to the right of the speedometer.

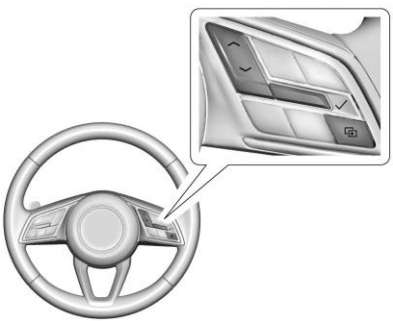

**∧ or ∨ :** Use to scroll to the previous or next selection.

**✓ :** Press to open a menu or select a menu item. Press and hold to reset certain displays.

### Information Display Options

Select which info display to view by selecting Add to Driver Display in the Vehicle Status on the infotainment display. See *Vehicle Status* ⇨ *113*.

### Information Displays

The following is the list of all information displays and their locations. Some information displays may not be available for your vehicle.

#### Left Zone

**Current Trip:** Displays the current distance traveled, in either kilometers (km) or miles (mi).

It also includes the Average Fuel Economy. Average Fuel Economy shows the approximate average liters per 100 kilometers (L/100 km), kilometers per liter (km/L), or miles per gallon (mpg). This number only reflects the approximate Average Fuel Economy that the vehicle has at that moment, and changes as driving conditions change.

The timer shows the time in the current drive cycle.

NOT FOR RESALE



All values in the Current Trip are automatically reset each time the vehicle is started.

**Trip Information:** The Trip 1 or 2 display shows the current distance traveled, in either kilometers (km) or miles (mi), since the trip odometer was last reset. To reset the trip, touch and hold the touchscreen display when trip odometer is displayed on the vehicle status screen.

The Average Fuel Economy display shows the approximate average liters per 100 kilometers (L/100 km), kilometers per liter (km/L), or miles per gallon (mpg). This number is calculated based on the number of L/100 km (mpg) or km/L recorded since the last time this menu item was reset. This number reflects only the approximate average fuel economy that the vehicle has right now, and will change as driving conditions change. The Average Fuel Economy can be reset along with the trip odometer by touching and holding the touchscreen display when trip odometer is displayed on the vehicle status screen.

**Time/Date:** Displays current date and time information. If equipped, Air Quality information is shown below date and time information. Air Quality shows the measured Particulate Matter (PM2.5), along with the status of the air quality. This indicates how clean or polluted outdoor air is. Higher numbers indicate more pollutants and a greater potential for adverse health effects.

**Battery Voltage:** Displays the current battery voltage.

**Oil Life:** Displays an estimate of the remaining oil life. If REMAINING OIL LIFE 99% is displayed, that means 99% of the current oil life remains. Follow any messages that display based on the oil life and the state of the system.

See *Engine Oil* ⇨ *254*. In addition to the engine oil life system monitoring the oil life, additional maintenance is recommended. See *Maintenance Schedule* ⇨ *321*.

The Oil Life must be reset after each oil change. It will not reset itself. Do not reset the Oil Life display at any time other than when the oil has just been changed. It cannot be reset accurately until the next oil change. To reset, see *Engine Oil Life System* ⇨ *256*.

**Fuel Economy:** Displays information about current and average fuel economy.

**Oil Pressure:** Displays the engine oil pressure in kPa (kilopascals) or psi (pounds per square inch).

**Coolant Temperature:** Displays the temperature of the coolant in either degrees Celsius (°C) or degrees Fahrenheit (°F).

**Transmission Fluid Temperature:** Displays the temperature of the automatic transmission fluid in either degrees Celsius (°C) or degrees Fahrenheit (°F).

**Tire Pressure:** Displays the approximate pressures of each tire. Tire pressure displays in either kilopascal (kPa) or in pounds per square inch (psi). If the pressure is low, the value for that tire is shown in amber. See *Tire Pressure Monitor System* ⇨ *286* and *Tire Pressure Monitor Operation* ⇨ *287*.

**Brake Pad Life:** Displays an estimate of the remaining life of the front and back brake pads. Messages display based on brake pad wear and the state of the system. Reset the Brake Pad Life display after replacing the brake pads. See *Brake Pad Life System* ⇨ *263*.

**Engine Air Filter Life:** Displays an estimate of the remaining engine air filter life and the state of the system. Engine Air Filter Life 95% means 95% of the current air filter life remains. Follow any messages that display based on engine air filter life and the state of the system. The Air Filter Life display must be reset after the engine air filter replacement.

NOT FOR RESALE



See *Engine Air Filter Life System* ⇨ *256*.

**Oil Temperature:** Displays the current oil temperature in either degrees Celsius (°C) or degrees Fahrenheit (°F).

**Off:** Displays no information in the cluster information display areas.

#### Right Zone

**Audio Now Playing:** Displays the actively playing audio.

**Navigation:** Displays a variety of navigation information.

**Auto Lane Change:** Displays the status of a driver-requested lane change when Super Cruise is active. See *Super Cruise* ⇨ *201*.

**Off:** Displays no information in the cluster information display areas.

## Vehicle Status

To access the menu select the Vehicle Status icon from the infotainment home screen. Vehicle status content is grouped together and shown on the infotainment display.

Follow any messages or alerts that display. Some options may be unavailable while driving.

Select Add to Driver Display to send the desired content to the Driver Information Center. Select Remove from Display to remove the selected content from the Driver Information Center. See *Driver Information Center (DIC)* ⇨ *111*.

### Options

The following is the list of vehicle status content and location. Not all content and options may be available for your vehicle.

#### Maintenance

**Tire Pressure:** Displays the approximate pressures of each tire. Tire pressure displays in either kilopascal (kPa) or in pounds per square inch (psi). If the pressure is low, the value for that tire is shown in amber. See *Tire Pressure Monitor System* ⇨ *286* and *Tire Pressure Monitor Operation* ⇨ *287*.

Choose from the following options: Relearn Sensors and Add to Driver Display.

If equipped, Tire Temperature is located below the tire pressure graphic. Tire Temperature displays overall temperature as either Cold, Cool, Normal, Warm, or Hot. Normal is typical for normal driving while Warm is typical for spirited driving. Unknown displays when tire temperature information is unavailable.

**Brake Pad Life:** Displays an estimate of the remaining life of the front and back brake pads. Messages display based on brake pad wear and the state of the system.

Choose from the following options: Turn Off/On, Reset Front Brake Pads, Reset Back Brake Pads, and Add to Driver Display. Reset the Brake Pad Life after replacing the brake pads. See *Brake Pad Life System* ⇨ *263*.

**Oil Life:** Displays an estimate of the remaining oil life. If REMAINING OIL LIFE 99% is displayed, that means 99% of the current oil life remains. Follow any messages that display based on the oil life and the state of the system.

See *Engine Oil* ⇨ *254*. In addition to the engine oil life system monitoring the oil life, additional maintenance is recommended. See *Maintenance Schedule* ⇨ *321*.

Choose from the following options: Reset and Add to Driver Display.

The Oil Life must be reset after each oil change. It will not reset itself. Do not reset the Oil Life display at any time other than when the oil has just been changed. It cannot be reset accurately until the next oil change. To reset, see *Engine Oil Life System* ⇨ *256*.

NOT FOR RESALE



**Engine Air Filter Life:** Displays an estimate of the remaining engine air filter life and the state of the system. Engine Air Filter Life 95% means 95% of the current air filter life remains. Follow any messages that display based on engine air filter life and the state of the system. The Air Filter Life display must be reset after the engine air filter replacement. See *Engine Air Filter Life System* ⇨ *256*.

Choose from the following options: Turn Off/On, Reset, and Add to Driver Display.

### Gauges

**Battery Voltage:** Displays the current battery voltage.

Select Add to Driver Display if desired.

**Coolant Temperature:** Displays the temperature of the coolant in either degrees Celsius (°C) or degrees Fahrenheit (°F).

Select Add to Driver Display if desired.

**Transmission Fluid Temperature:** Displays the temperature of the automatic transmission fluid in either degrees Celsius (°C) or degrees Fahrenheit (°F).

Select Add to Driver Display if desired.

**Oil Pressure:** Displays the engine oil pressure in kPa (kilopascals) or psi (pounds per square inch).

Select Add to Driver Display if desired.

**Oil Temperature:** Displays the current oil temperature in either degrees Celsius (°C) or degrees Fahrenheit (°F).

Select Add to Driver Display if desired.

### Trip

**Trip Information:** Trip 1 or 2 displays the current distance traveled, in either kilometers (km) or miles (mi), since the trip odometer was last reset.

Average Fuel Economy displays the approximate average liters per 100 kilometers (L/100 km) or miles per gallon (mpg). This number is calculated based on the number of L/100 km (mpg) recorded since the last time this menu item was reset. This number reflects only the current, approximate average fuel economy and changes as driving conditions change.

To reset these values, touch reset on the touchscreen display when the Trip Information dialog is selected.

The following options may be chosen: Reset Trip 1, Reset Trip 2, and Add to Driver Display.

**Fuel Economy:** Displays average fuel economy, the best fuel economy over the selected distance, and a bar graph showing instantaneous fuel economy. Values are displayed in liters per 100 kilometers (L/100 km) or miles per gallon (mpg). This number reflects only the approximate fuel economy and changes frequently as driving conditions change. Only the best score can be reset.

The following options may be chosen: Change Distance, Reset Best Score, and Add to Driver Display. The distance for average fuel economy and the best fuel economy can be changed to: 40 km (25 mi), 80 km (50 mi), and 725 km (300 mi).

**Current Trip:** Displays the current distance traveled, in either kilometers (km) or miles (mi).

It also includes the Average Fuel Economy. Average Fuel Economy shows the approximate average liters per 100 kilometers (L/100 km), kilometers per liter (km/L), or miles per gallon (mpg). This number only reflects the approximate Average Fuel Economy that the vehicle has at that moment, and changes as driving conditions change.

NOT FOR RESALE



The timer shows the time in the current drive cycle.

All values in the Drive Summary are automatically reset each time the vehicle is started.

Add to Driver Display may be chosen.

#### Air Quality

If equipped, displays the measured interior Particulate Matter (PM2.5), along with the status of the air quality. Higher numbers indicate more pollutants and a greater potential for adverse health effects. When Air Quality Index numbers are high, close your vehicle's windows and doors, set your climate system to Auto, and turn on air recirculation. Air Quality Index displays the possible measurement ranges along with the status that is attributed to those ranges.

Choose from the following options: Air Quality Index and Add to Driver Display.

## Head-Up Display (HUD)

**⚠ Warning**

A Head-Up Display (HUD) image that is too bright or positioned too high in your field of view can reduce your ability to see the road ahead, especially at night. This may increase the risk of a crash. Keep the HUD image dim and positioned low in your field of view.

**Caution**

If you try to use the HUD image as a parking aid, you may misjudge the distance and damage your vehicle. Do not use the HUD image as a parking aid.

**Caution**

The Head-Up Display projects information using polarized light. Wearing polarized sunglasses can block this light, making the image invisible, dim, or difficult to read. Do not use polarized sunglasses when using the Head-Up Display feature.

If equipped, the Head-Up Display (HUD) projects vehicle information onto the windshield through a lens on top of the instrument panel.

You can change the language and the units of measurement to English or metric through the infotainment screen. See "System" under *Settings* ⇨ *149*.

If equipped, the Head-Up Display (HUD) may display the following vehicle information, messages, or alerts:

- Speed
- Incoming Phone Calls
- Navigation
- Driver Assistance Indicators
- Vehicle Messages

#### Controls

The controls are located on the instrument cluster touchscreen to the left of the steering wheel. See *Instrument Panel Overview* ⇨ *5*.

Press ⏻ to turn the Head-Up Display (HUD) on or off.

#### Image

To adjust the Head-Up Display (HUD) image:

NOT FOR RESALE



1. Adjust the driver seat to your optimal driving position.
2. Start the vehicle.
3. Select Adjust HUD on the touchscreen to the left of the steering wheel.
4. Swipe left to right to access settings for brightness, height, and rotation. Select the icons to adjust the image to a position level with the ground that is fully visible and clear.
5. The image will automatically dim and brighten to compensate for outside lighting. Use the brightness icons to adjust as needed.

The image can temporarily light up depending on the angle and position of sunlight on the image. This is normal.

The Head-Up Display (HUD) settings are stored and recalled with memory seats, if equipped. See *Memory Seats* ⇨ *37*.

### Options

Speed Limit Sign:

- To turn the posted speed sign, if equipped, in the Head-Up Display (HUD) on or off, on the infotainment home screen, select *Settings* ⇨ *149* > Display > Driver Display.
- To turn Traffic Sign Recognition, if equipped, in the Head-Up Display (HUD) on or off, select *Settings* ⇨ *149* > Vehicle > Speed Assist.

Turn-by-Turn Navigation:

- To turn the Turn-by-Turn Navigation in the Head-Up Display (HUD) on or off, on the infotainment home screen, select Settings > Display > Head-Up Display.

### Content

If equipped, the following content displays in the Head-Up Display (HUD). Critical alerts may appear in the display, even when it is turned off.

**Speed:** Displays the speedometer reading in English or metric units, posted speed limit, and some indicators. See *Symbols* ⇨ *3*. Incoming phone call information, if connected via Bluetooth, and select alerts will temporarily display in the Head-Up Display (HUD).

**Navigation:** If equipped, displays the speed content and Turn-by-Turn Navigation information during an active route.

### Troubleshooting

To ensure optimal visibility of the Head-Up Display (HUD) image, make sure that:

- The windshield is clean. See *Interior Care* ⇨ *315*. The windshield is part of the Head-Up Display (HUD) system. See *Windshield Replacement* ⇨ *267*.
- The lens is clean and clear of any obstructions. See *Interior Care* ⇨ *315*.
- The brightness setting is appropriately adjusted.
- The Head-Up Display (HUD) is adjusted to the proper height and rotation.

If you continue to experience problems, contact your dealer.

## Vehicle Messages

Messages displayed on the Driver Information Center indicate the vehicle status or needed action to correct a condition. Multiple messages may appear together.

Vehicle status notifications are also sent to the infotainment display. Touch on the infotainment home screen to display vehicle messages. A red dot on the notification icon

NOT FOR RESALE



indicates an active issue. Depending on the message, you can schedule service or find the nearest dealer.

Press ✓ to acknowledge and clear the messages that do not require immediate action. You cannot clear messages that require immediate action until that action is performed.

Address and follow all message instructions promptly; clearing a message does not correct the issue.

If a SERVICE message appears, see your dealer.

The system may display messages concerning:

- Service Messages
- Fluid Levels
- Vehicle Security
- Brakes
- Ride Control Systems
- Advanced Driver Assistance Systems
- Cruise Control
- Lighting and Bulb Replacement
- Wiper/Washer Systems
- Doors and Windows
- Seat Belts
- Airbag Systems
- Engine and Transmission
- Tire Pressure
- Battery
- Steering

## Engine Power Messages

### REDUCED ACCELERATION DRIVE WITH CARE

This message indicates reduced propulsion power, which will affect maximum acceleration. Drive with caution. Try restarting after the ignition has been off for two minutes. If acceleration decreases significantly, propulsion may be disabled while the vehicle is in motion.

If this message stays on or appears repeatedly, take the vehicle to your dealer for service as soon as possible.

## Vehicle Speed Messages

### SPEED LIMITED TO XXX KM/H (MPH)

This message indicates that the vehicle has limited its speed to protect vehicle systems, such as lubrication, thermal, brakes, suspension, tires, or Teen Driver, if equipped.

# Universal Remote System

## Universal Remote System Programming (Garage Door Opener)

If equipped, the Universal Remote System can replace up to eight remote control transmitters (remote controls), such as garage door openers, security systems, and home automation devices. These instructions address garage door openers, but will work for other devices, too.

Do not use the Universal Remote System with any garage door opener that does not have the stop and reverse feature. This includes any garage door opener model manufactured before April 1, 1982.

NOT FOR RESALE



Keep the original hand-held transmitter for use in other vehicles and future programming and erase the system if you terminate vehicle ownership. See “Erasing Universal Remotes” later in this section.

### Programming the Universal Remote System

Programming involves time-sensitive steps. You must complete these steps within the allotted time, or you will have to repeat programming.

Read these instructions completely before programming the Universal Remote System. It may help to have another person assist with the programming process.

1. If your garage door opener includes a hand-held transmitter, make sure it has a new battery for quick and accurate transmission of the radio-frequency signal.
2. Clear all people and objects away from the garage door.
3. Park your vehicle outside and directly facing the garage door opener receiver. The vehicle must remain in P (Park) for the entire duration of the programming.
4. From the Controls menu, select Universal Remotes > Add Remote.

   Depending on the vehicle, access the Controls menu from either the infotainment apps screen or the front center console.
5. If you have a hand-held transmitter, make sure to press Yes to continue to the next step.

   If your garage door opener does not include a hand-held transmitter, press either D-Mode (mostly used in North America), or UR-Mode (mostly used in Europe, Mideast, and Asia), and jump to “D-Mode and UR-Mode Based Programming” later in this section.

**Hand-Held Transmitter Based Programming**

Once you press Yes for the hand-held transmitter, you should see a screen with Searching for Signal.

6. While Searching for Signal is displayed, press and hold the hand-held transmitter button about 3 to 8 cm (1 to 3 in) away from the rear-view mirror. Do not release the button until Signal Found displays.

   If Signal Found does not display after 45 seconds, press < and return to Step 4 to try again.

   Some garage door openers require a modification to Step 6. See “Radio Signals for Some Gate Operators” later in this section.
7. Once Signal Found displays, press the Test button on the screen. You may need to press it several times, as some garage door openers require multiple valid signals when programming.
8. If your garage door moves, press the It Worked button to confirm programming was successful and end the process.

   If programming was not successful, you can return to Step 4 and try again or follow additional steps described in “D-Mode and UR-Mode Based Programming” later in this section. You can also consult with HomeLink by jumping to “Contact HomeLink” later in this section.

**D-Mode and UR-Mode Based Programming**

If supported, you may be able to program D or UR mode garage door receiver remotes.

NOT FOR RESALE



9. Locate the Learn or Smart button on the garage door opener receiver in the garage. The name and color may vary by manufacturer but is usually located near the antenna wire. If you have any difficulty finding the button, refer to the garage door opener manufacturer's instructions.
10. Press and release the Learn or Smart button on the garage door opener receiver, then complete the next step within 30 seconds of pressing the button. If it takes longer than 30 seconds, press the button again.
11. Return to the vehicle and press the Test button on the screen. You may need to press the Test button several times. If your garage door moves, then programming was successful. Press the It Worked button to confirm programming was successful and end the process.

    If programming was not successful, you may retry steps above by pressing the It Didn't Work button or consult with HomeLink by jumping to "Contact HomeLink" later in this section.

### Contact HomeLink

For questions or programming help, visit www.homelink.com/gm or call 1–800–355–3515. International rates apply for calls placed outside the U.S., Canada, or Puerto Rico, and may differ based on landline or mobile phone.

### Using Universal Remotes

After successfully programming your Universal Remote, you can change the name and location of the remote as desired by selecting next to the remote on the screen. Be sure that you are nearby your programmed garage door opener when you select Update Location.

Each successfully programmed remote creates a shortcut icon. Tap the desired shortcut icon to operate the remote. You can press and drag icons to reposition them on the screen as desired.

### Erasing Universal Remotes

To erase an individual programmed Universal Remote, select next to the remote on the screen you wish to erase. Then select Delete.

To erase ALL programmed Universal Remotes, select next to any remote on the screen. Then select Delete All.

### Radio Signals for Some Gate Operators

Some gate operators and radio-frequency laws require transmitter signals to time out after several seconds of transmission.

This may not be long enough for the Universal Remote system to pick up the signal during programming. If programming did not work, replace Step 6 under "Programming the Universal Remote System," previously in the section, with the following:

Press and release the hand-held transmitter button every two seconds until Signal Found appears on the screen. Continue to Step 7 to complete programming.

## Universal Remote System Operation (Garage Door Opener)

### Using the Universal Remote System

If equipped, press the desired Universal Remote button on the infotainment apps screen or the front center console, depending on the vehicle.

NOT FOR RESALE



### Reprogramming a Single Universal Remote System Button

To reprogram any of the system buttons:

1. Select the universal remote to be reprogrammed.
2. Select "Delete."
3. Select "Add Remote." Follow the instructions in *Universal Remote System Programming (Garage Door Opener)* ⇨ *117*.

NOT FOR RESALE



# Lighting

**Exterior Lighting**
Headlight Controls ..... 121
High-Beam Systems ..... 122
Headlights Off Reminder ..... 123
Daytime Running Lights ..... 123
Automatic Headlight System ..... 123
Hazard Warning Flashers ..... 124
Turn and Lane-Change Signals ..... 124
Cornering Lights ..... 125

**Interior Lighting**
Instrument Panel Illumination Control ..... 125
Dome Lights ..... 125
Reading Lights ..... 126

**Lighting Features**
Entry Lighting ..... 126
Exit Lighting ..... 127
Ambient Lighting ..... 127
Battery Load Management ..... 127
Battery Power Protection ..... 128
Exterior Lighting Battery Saver ..... 128

# Exterior Lighting

## Headlight Controls

The headlight control is on the infotainment screen. Touch the Headlights symbol, then select any of the following options.

**Off :** Turns off the exterior lights and deactivates the AUTO mode.

For vehicles first sold in Canada: When not in P (Park), either the Daytime Running Lights or headlights must always be on, due to Canadian safety regulations. Regardless of the headlight control setting, when you shift out of P (Park), the Automatic Headlight System will activate and turn on either the Daytime Running Lights or headlights.

**Auto:** Enables the Automatic Headlight System, which controls the exterior lights and instrument panel lights depending on outside lighting. See *Automatic Headlight System* ⇨ *123*.

**:** Turns on the exterior lights, such as parking lights, taillights, instrument panel lights, and license plate lights.

**:** Turns on the headlights and all the lights listed in .

To activate the headlights in the Controls & Safety app, on the infotainment home screen, select > See More Controls > Lights > Headlights.

### Lights On in Canada

For vehicles first sold in Canada: When not in P (Park), either the Daytime Running Lights or headlights must always be on, due to Canadian safety regulations. Regardless of the headlight control setting, when you shift out of P (Park), the Automatic Headlight System will activate and turn on either the Daytime Running Lights or headlights.

### Optional Reminder If Headlights Are Off

To set a reminder for the vehicle to display a message if it is dark outside and the headlights are off:

1. On infotainment screen, select > See More Controls > Lights > Headlights.
2. Select > in the upper corner of the Headlights menu.
3. Select the box next to Turn Headlight Reminder On to enable or disable the option.

NOT FOR RESALE



## High-Beam Systems

### Manual High-Beam Controls

#### High/Low-Beam Changer

To manually turn the high beams on, push the turn signal lever away from you until it stays in place. To return to low beams, push the lever again or pull it toward you and release.

The high-beam indicator light appears in the instrument cluster when the high-beam headlights are on.

#### Flash-to-Pass

To flash the high beams, briefly pull the turn signal lever toward you and release.

### Automatic High-Beam System — IntelliBeam

If equipped, this system turns the high-beam headlights on and off automatically when it is dark enough and no other traffic is present.

There is a sensor near the top center of the windshield that automatically detects the lights of oncoming and preceding vehicles. Keep this area of the windshield clear of obstructions for best system performance.

#### Turning IntelliBeam On and Off

To enable IntelliBeam:

1. Set the Headlights control to Auto or . See *Headlight Controls* ⇨ *121*
2. On the infotainment app screen, select Controls > Auto High Beams > On or > See More Controls > Lights > Auto High Beams > On.

The IntelliBeam light AUTO appears in the instrument cluster when the system is enabled.

To disable the system when high beams are ON, turn on the manual high beams using either the high/low-beam changer or flash-to-pass.

You can disable the system from the infotainment app screen by selecting > Auto High Beams > Off.

#### Driving with IntelliBeam

**⚠ Warning**

Using high beams in dense exhaust, smoke, fog, snow, road spray, mist, or other airborne obstructions can cause a glare,

(Continued)

**Warning (Continued)**

obstructing your vision. This reduction in visibility can result in a crash. Never use high beams in dense exhaust, smoke, fog, snow, road spray, mist, or other airborne obstructions.

The system only activates the high beams when driving over 40 km/h (24 mph).

The blue High-Beam On light AUTO appears on the instrument cluster when the high beams are on.

The high-beam headlights remain on, under automatic control, until one of the following situations occurs:

- The vehicle speed drops below 20 km/h (12 mph).
- The outside light is bright enough that high-beam headlights are not required.
- The system detects an approaching vehicle's headlights.
- The system detects a preceding vehicle's taillights.
- You manually disable IntelliBeam.

NOT FOR RESALE



- You set the headlight control to Off or Parking .

The high-beam headlights may not turn off automatically and must be manually disabled if the system cannot detect another vehicle's lights because of any of the following conditions:

- The other vehicle's lights are missing, damaged, or otherwise undetected.
- The other vehicle's lights are covered or obstructed from view by dense exhaust, smoke, fog, snow, road spray, dirt, mist, or other obstructions.
- The windshield is dirty, cracked, or the light sensor is obstructed.
- A heavy vehicle load raises the front end such that the sensor aim is too high to detect lights.
- You are driving on winding or hilly roads.

## Headlights Off Reminder

An audible alert sounds when the headlights or parking lights are manually turned on, the vehicle is off, and a door is open. To disable the audible alert, turn off the lights.

## Daytime Running Lights

Daytime Running Lights make it easier for others to see the front of your vehicle during the day.

The Automatic Headlight System turns the Daytime Running Lights on and off.

### When Daytime Running Lights Turn On

The Daytime Running Lights turn on when all the following conditions are met:

- The vehicle is on
- The headlight control is set to Auto
- The light sensor determines it is daytime

The instrument panel lights, taillights, and other exterior lights do not turn on when the Daytime Running Lights are on.

For vehicles first sold in Canada: When not in P (Park), either the Daytime Running Lights or headlights are always on, regardless of the headlight control setting, due to Canadian safety regulations.

### When Daytime Running Lights Turn Off

When it begins to get dark, the automatic headlight system turns off the Daytime Running Lights and turns on the headlights.

To turn off the Daytime Running Lights change the headlight control setting from Auto to off, parking lights, or headlights on, or turn off the vehicle. See *Headlight Controls* ⇨ *121*.

For vehicles first sold in Canada, the Daytime Running Lights turn off only when the vehicle is shifted to P (Park) and the headlight control is set to off or .

## Automatic Headlight System

The Automatic Headlight System controls the headlights, other exterior lights, and instrument panel lights depending on the outside light level.

To enable the system, set the headlight control to Auto.

- If it is dark enough outside, the system turns on the interior instrument panel lights and the exterior lights, such as headlights, taillights, parking lights, and license plate lights.
- If it is bright enough outside, the system turns off the exterior lights and instrument panel lights and may turn on the Daytime Running Lights.

NOT FOR RESALE



To turn off the Automatic Headlight System, either turn the headlight control or the vehicle off.

**Low Light Conditions During Daylight Hours**

When driving through a parking garage, tunnel, or heavy overcast weather, the automatic headlight system may sense a low light level and turn on the headlights. This is normal.

If you start the vehicle in a dark garage, the headlights turn on immediately. If it is light outside when the vehicle leaves the garage, there is a slight delay before the Automatic Headlight System switches over to Daytime Running Lights. During that delay, the instrument cluster may not be as bright as usual. Make sure the instrument panel brightness control is in the full bright position. See *Instrument Panel Illumination Control* ⇨ *125*.

**Location of Light Sensor**

A light sensor on top of the instrument panel measures the outside light level. See *Instrument Panel Overview* ⇨ *5*.

Do not cover the sensor, otherwise the exterior lights will turn on when not needed.

**Lights On with Wipers**

If you activate the windshield wipers in the daylight with the vehicle on and the headlight control set to Auto, the headlights, parking lights, and other exterior lights turn on. The transition time for the lights turning on varies based on wiper speed. When the wipers are not operating, these lights turn off.

Set the headlight control to off or Parking to disable this feature.

## Hazard Warning Flashers



Hazard warning flashers help alert others that you are having trouble. Press button on the overhead console to turn the front and rear turn signal flashers on. Press again to turn them off.

When the hazard warning flashers are on, the turn signal lights do not respond to the turn signal lever.

The hazard warning flashers turn on automatically if the airbags deploy.

## Turn and Lane-Change Signals

Raise or lower the turn signal lever until the arrow on the instrument cluster starts to flash in the corresponding direction. See *Instrument Panel Overview* ⇨ *5*.

**Changing Lanes:** Hold the lever in place until you complete the lane change. Let go of the lever and it returns to its starting position.

If you raise or lower the lever quickly then release it, the turn signal flashes three times.

If you change lanes without using the turn signal, the Lane Keep Assist system, if equipped, may respond. See *Lane Keep Assist (LKA)* ⇨ *241*.

NOT FOR RESALE



**Turning Corners:** Move the lever all the way up or down so that it stays in place when you let go. When you complete the turn, bringing the steering wheel back to center will automatically turn off the turn signal.

If the steering wheel did not turn far enough, the turn signal will remain flashing until you move the lever back to its starting position.

#### Turn Signal On Alert

If you leave the turn signal on for more than 1.2 km (0.75 mi), an audible alert sounds at each flash of the turn signal. The message TURN SIGNAL ON also appears in the Driver Information Center. To turn off both the audible alert and message, move the turn signal lever back to its starting position.

#### Turn Signal Not Working Normally

If the indicator arrow flashes rapidly when using the turn signal, an exterior LED may have burned out. See your dealer for service.

If the exterior LED is not burned out, check the fuse. See *Instrument Panel Fuse Block* ⇨ *274*.

## Cornering Lights

If equipped, cornering lights automatically turn on when all the following conditions occur:

- The low-beam headlights are on.
- You activate the turn signals or turn the steering wheel to turn a corner.
- The vehicle speed is below 40 km/h (25 mph).

# Interior Lighting

## Instrument Panel Illumination Control



This feature adjusts the brightness of all illuminated controls.

: Move the thumbwheel up or down to brighten or dim the lights.

The brightness adjustment is functional at night, or when the headlights or parking lights are on.

## Dome Lights

Dome lights provide overhead interior lighting and lighting in the rear cargo compartment. They may turn on automatically as part of entry lighting and exit lighting.

To turn the dome lights on or off manually, from the app screen on the infotainment display, select > .

#### Auto Mode

You can set an option for the dome lights to turn on automatically or to stay off when you open any door.

Select > See More Controls > Lights.

Touch > in the upper corner of the Dome Light menu.

Touch the Auto box to enable or disable this option.

NOT FOR RESALE



## Reading Lights

Reading lights are located on the overhead console, above the second row passenger doors, and over the rear seats. To turn a reading light on or off, press the light lens.

The reading lights are also used as dome lights, and may come on with entry and exit lighting. See *Dome Lights* ⇨ *125*.

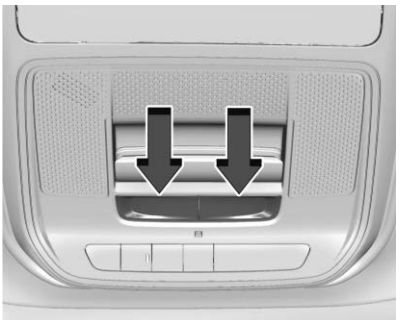

**Front Reading Lights**

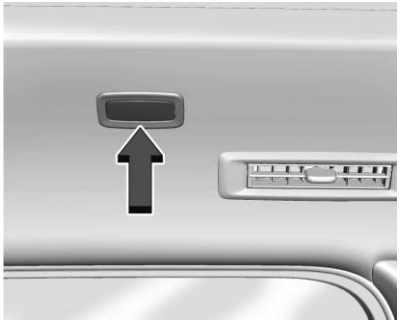

**Second Row Reading Lights**

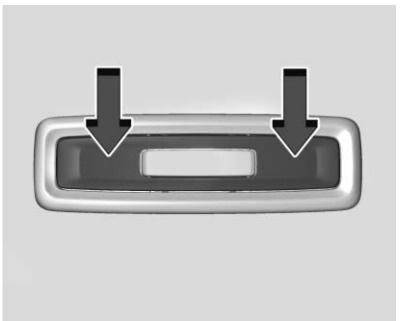

**Third Row Reading Lights**

# Lighting Features

## Entry Lighting

The entry lighting feature automatically turns on various interior and exterior lights for increased visibility in and around a vehicle.

**Interior:** The interior lights may turn on when you open any doors or press on the remote key.

For interior lights to turn on, you must enable the Auto option for the dome lights. See *Dome Lights* ⇨ *125*.

**Exterior:** Some exterior lights also turn on when you press on the remote key.

Low-beam headlights will only turn on briefly at night, or in areas with limited lighting.

All interior and exterior lights turn off when you press on the remote key or start the vehicle. The lights eventually turn off automatically if you do not interact with the vehicle.

To change this feature, from the app screen on the infotainment display, select Settings > Vehicle > Lighting.

NOT FOR RESALE



### Approach Detection

If equipped, entry lighting activates when the vehicle detects the remote key within approximately 2 m (6 ft).

If you do not use the remote key or keyless access for an extended period while the vehicle is parked, approach detection deactivates. To reactivate approach detection, press any button on the remote key or open and close all doors.

## Exit Lighting

Some exterior lights and interior lights turn on when the driver door is opened after the vehicle is turned off.

The exterior and interior lights remain on for a set amount of time, then automatically turn off.

The interior lights turn on when the vehicle is turned off.

The exterior lights turn off immediately when the headlight control is set to Off.

This feature can be changed. From the app screen on the infotainment display, select Settings > Vehicle > Lighting.

## Ambient Lighting

If equipped, the ambient lighting feature allows you to customize the color and brightness of the lights throughout the passenger cabin. On the infotainment home screen, select Ambient Lighting.

To disable or enable ambient lighting, slide the on-screen toggle to the desired position. This toggle control is present on each screen in the ambient lighting app.

### Customize

Choose from the following options to set the ambient lighting color:

- Touch a colored bar to bring up a palette of options in that color family, then touch a dot on the color palette to change the current ambient light color.
- If equipped, touch SET TO DRIVE MODE to pair the ambient lighting with drive modes. When you select a drive mode, the ambient lighting changes to a preset color assigned to that mode.

### Brightness

Drag the marker across the scale as desired, or tap the decrease (–) or increase (+) symbols to increase or decrease brightness.

### Demo Mode

If equipped, select ▷ to automatically cycle through the available colors. Demo Mode is only available when the vehicle is in P (Park).

## Battery Load Management

Electric Power Management estimates the battery temperature and state of charge. It then adjusts the voltage for best performance and extended life of the battery.

When the battery state of charge is low, the voltage raises slightly to quickly bring the charge back up. When the state of charge is high, the voltage lowers slightly to prevent overcharging. As this adjustment occurs, you may see the voltage move up or down on the voltmeter gauge or voltage display, if equipped, on the instrument cluster. This is normal. If there is a problem, an alert will be displayed. See *Instrument Cluster* ⇨ *97*

NOT FOR RESALE



For all vehicles, the battery can be discharged at idle if the electrical loads are very high. This is because the generator (alternator) may not be spinning fast enough at idle to produce all the power that is needed for very high electrical loads.

A high electrical load occurs when several of the following are on: headlights, high beams, fog lights, rear window defogger, climate control fan at high speed, heated seats, engine cooling fans, trailer loads, and loads plugged into accessory power outlets.

Electric Power Management prevents excessive discharge of the battery by balancing the generator's output and the vehicle's electrical needs. It can increase engine idle speed to generate more power, whenever needed. It can temporarily reduce the power demands of some accessories.

Normally, these actions occur in steps or levels, without being noticeable. In rare cases at the highest levels of corrective action, you may notice these actions and a Driver Information Center message might be displayed. If so, reduce the electrical loads as much as possible. See *Driver Information Center (DIC)* ⇨ *111*.

## Battery Power Protection

This feature helps prevent the battery from being drained if you leave the interior dome lights or reading lights on. These lights automatically turn off 10 minutes after you turn the vehicle off. The lights will not turn back on again until one of the following actions occurs:

- You start the vehicle.
- You close the doors, then re-open them.

## Exterior Lighting Battery Saver

If you leave the parking lights or headlights on manually, they turn off about 10 minutes after you turn the vehicle off. This protects against draining the battery. To restart the 10-minute timer, turn the headlight control off and then select  or .

To keep the lights on for more than 10 minutes, restart the vehicle or put it in accessory mode.

NOT FOR RESALE



# Infotainment System

**Introduction**
Introduction ..... 129
Overview ..... 130
Steering Wheel Controls ..... 131
Using the System ..... 131

**Radio**
AM-FM Radio ..... 133
Satellite Radio ..... 134
Radio Reception ..... 135
Multi-Band Antenna ..... 135

**Audio Players**
Avoiding Untrusted Media Devices ..... 135
USB Port ..... 135
Bluetooth Audio ..... 136

**Navigation**
Using the Navigation System ..... 136
Maps ..... 137
Navigation Symbols ..... 137
Destination ..... 138
Global Positioning System (GPS) ..... 139
Vehicle Positioning ..... 139
Problems with Route Guidance ..... 140

**Voice Assistant**
Voice Assistant (Google Gemini) ..... 140
Voice Assistant (OnStar AI Assistant) ..... 141

**Phone**
Bluetooth (Overview) ..... 142
Bluetooth (Pairing and Using a Phone) ..... 143
Apple CarPlay and Android Auto ..... 147

**Settings**
Settings ..... 149
Teen Driver ..... 151

**Trademarks and License Agreements**
Trademarks and License Agreements ..... 154

## Introduction

Read the following pages to become familiar with the features.

**⚠ Warning**

Taking your eyes off the road for too long or too often while using any infotainment feature can cause a crash. You or others could be injured or killed. Do not give extended attention to infotainment tasks while driving. Limit your glances at the vehicle displays and focus your attention on driving. Use voice commands whenever possible.

The infotainment system has built-in features intended to help avoid distraction by disabling some features when driving. These features may become disabled on the infotainment apps screen when they are unavailable. Many infotainment features are also available through the instrument cluster and steering wheel controls.

NOT FOR RESALE



Before driving:

- Become familiar with the operation, center stack controls, steering wheel controls, and infotainment display.
- Set up the audio by presetting favorite stations, setting the tone, and adjusting the speakers.
- Set up phone numbers in advance so they can be called easily by pressing a single control or by using a single voice command.

See *Distracted Driving* ⇨ *165*.

### Active Noise Cancellation

If equipped, Active Noise Cancellation reduces engine noise in the vehicle's interior. Active Noise Cancellation requires the factory-installed audio system, radio, speakers, amplifier (if equipped), induction system, and exhaust system to work properly. Deactivation may be required by your dealer if related aftermarket equipment is installed.

## Overview

### Infotainment System

The infotainment system is controlled by using the infotainment display, infotainment controls on the center console, steering wheel controls, and voice recognition, if available.

#### Infotainment Controls




1. ⏻/◢ (Power/Volume)
   - Press to turn the power on.
   - Press and hold when the system is on to turn the power off.
   - Press to mute/unmute the system when on.
   - Turn to decrease or increase the volume.

### Infotainment Home Screen

The infotainment home screen is where vehicle application icons are accessed. Some applications are disabled when the vehicle is moving.

Swipe left or right across the display to move the infotainment home screen.

#### Managing Infotainment Home Screen Icons

1. Touch and hold any of the infotainment home screen icons to enter edit mode. Edit mode is not available when the vehicle is moving.
2. Continue holding the icon and drag it to the desired position.
3. Release your finger to drop the icon in the desired position.
4. To move an application to another page, drag the icon to the edge of the display toward the desired page
5. Continue dragging and dropping application icons as desired.

NOT FOR RESALE



There will always be 10 icons per page except on the last page. If an icon is moved from the first page to the second, then that icon from the second page will replace the one removed from the first.

## Steering Wheel Controls

If equipped, some audio controls can be adjusted at the steering wheel.

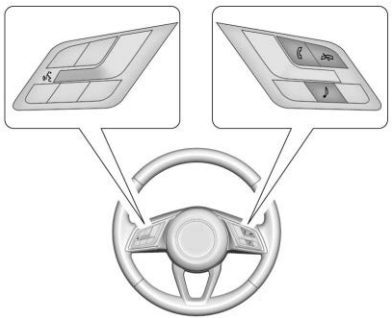

: Press to initiate voice assistant.

: Press to answer an incoming phone call or show the recent phone call list when not in a call.

: Press to reject an incoming phone call, end an active phone call, end a voice recognition session, or mute the audio when there is no phone call.

: Press to show the audio sources list.

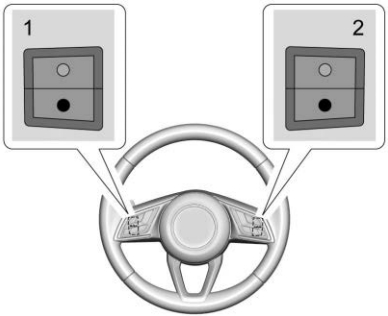


The favorite and volume switches are on the back of the steering wheel.

1. Favorite: When on a radio source, press to select the next or previous favorite. When on a media source, press to select the next or previous track.
2. Volume: Press to increase or decrease the volume.

## Using the System

Some features can be controlled using by using the voice assistant. To control features with the voice assistant, speak the wake words and then speak the desired commands. To control features on the infotainment app screen, read the following information.

### Audio

Touch the Audio icon to display the active audio source page. Examples of available sources may include AM, FM, SiriusXM (if equipped), USB, AUX, and Bluetooth.

### Phone

Touch the Phone icon to display the Phone main page. See *Bluetooth (Pairing and Using a Phone)* ⇨ *143 Bluetooth (Overview)* ⇨ *142*.

### Maps

If equipped, touch the Maps icon to display the navigation map. See *Using the Navigation System* ⇨ *136*.

NOT FOR RESALE



### Voice Assistant

If equipped, touch the voice sssistant icon to open the app. See *Voice Assistant (Google Gemini)* ⇨ *140 Voice Assistant (OnStar AI Assistant)* ⇨ *141*.

### Google Play

Touch to download some of your favorite apps in your vehicle. Downloading apps on Google Play require you to sign into a Google Account with an active service plan with data. Some third-party apps require a separate account and, in some cases, a paid subscription for in-vehicle access.

### Settings

Touch the Settings icon to display the Settings menu. See *Settings* ⇨ *149*.

### Apple CarPlay

If equipped, touch the Apple CarPlay icon to activate Apple CarPlay after a supported device is connected. See *Apple CarPlay and Android Auto* ⇨ *147*.

### Android Auto

If equipped, touch the Android Auto icon to activate Android Auto after a supported device is connected. See *Apple CarPlay and Android Auto* ⇨ *147*.

### Infotainment System Reboot

Just like a smartphone, the infotainment system can be rebooted .

1. Place the vehicle in park.
2. Press and hold the End Call button on your steering wheel for about 20 seconds. A service screen pop up may appear. You do not need to select any options.
3. Continue to hold the End Call button until the center display turns off.

After about 10 seconds, a welcome screen will appear and the infotainment system will reboot.

### Application Tray

The application tray is left of the display. It shows multiple applications.

### Infotainment Display Features

Infotainment display features show on the display when available. When a feature is unavailable, it may gray out. When a feature is touched, it may highlight.

### Infotainment Gestures

Use the following finger gestures to control the infotainment system.

#### Touch/Tap

Touch/tap is used to select an icon or option, activate an application, or change the location inside a map.

#### Touch and Hold

Touch and hold can be used to move or delete an application.

#### Drag

Drag is used to move applications on the infotainment home screen, or to pan the map. To drag the item, it must be held and moved along the display to the new location. This can be done up, down, right, or left. This feature is only available when vehicle is parked and not in motion.

NOT FOR RESALE



#### Nudge

Nudge is used to move items a short distance on a list or a map. To nudge, hold and move the selected item up or down to a new location.

#### Fling or Swipe

Fling or swipe is used to scroll through a list, pan the map, or change page views. Do this by placing a finger on the display then moving it rapidly up and down or right and left.

#### Spread

Spread is used to zoom in on a map, certain images, or a web page. Place finger and thumb together on the display, then move them apart.

#### Pinch

Pinch is used to zoom out on a map, certain images, or a web page. Place finger and thumb apart on the display, then move them together.

### Cleaning High Gloss Surfaces, Vehicle Information, and Radio Displays

See *Interior Care* ⇨ *315*.

# Radio

## AM-FM Radio

### Playing the Radio

From the infotainment home screen, touch the Audio icon to display the active audio source. Touch the source icon from the top of the page to choose from AM, FM, SiriusXM, or Bluetooth.

### Finding a Station

#### Seeking a Station

From the AM or FM screen, touch the back or forward buttons to search for the previous or next strong station.

#### Tune

Touch on the infotainment display to enter the Tune screen. Enter a frequency using the keypad.

Touch the ☆ to save the station as a favorite.

Entering a valid AM or FM frequency will automatically tune to the new station but not close the Tune screen.

Touch the Go button or frequency in the list to begin playing the station. The tune page will close and return to the now playing screen.

### Storing Radio Station Favorites

Favorites show in the area left of the display.

AM, FM, or SiriusXM favorites can be stored by touching Hold to Set on the left side of the screen.

The number of favorites is displayed automatically.

### Audio Settings

Audio settings vary by region.

From the now playing screen, touch ⚙ and the following may display.

#### Sound

- Equalizer
- Fade/Balance
- Sound Mode (if equipped)

#### Bose AudioPilot

If equipped, adjusts the volume based on the noise inside the vehicle and vehicle speed.

#### Manage Radio Favorites

Displays a list of audio favorites that can be moved or deleted.

NOT FOR RESALE



**Radio Text (RDS)**

When on, radio station name and messages from radio stations will be shown.

**Radio Text Categories**

When on, category information about current radio content will be shown.

### Radio Text – Radio Data Systems (RDS)

Radio Data Systems (RDS) relies on receiving specific Radio Data Systems (RDS) information from radio stations and only works when the information is available. It is possible that a radio station could broadcast information that causes the radio to work improperly.

In addition, Radio Data Systems (RDS) features are region and country of sale specific. This means specific Radio Data Systems (RDS) content may not be available in your listening area or in the country you operate the vehicle.

To turn Radio Data Systems (RDS) features on or off, see "Audio Settings" previously.

The following Radio Data Systems (RDS) features may be supported by radio broadcasters in your listening area:

**Radio Text Radio Data Systems (RDS) Features**

- Display radio station name
- Display messages from radio stations
- Provide radio station category information (when available)

## Satellite Radio

### SiriusXM Radio Service

If equipped, vehicles with a SiriusXM radio subscription can receive SiriusXM programming.

SiriusXM radio has a wide variety of programming and commercial-free music, coast to coast, in digital-quality sound. In the U.S., see www.siriusxm.com or call 1-888-601-6296. In Canada, see www.siriusxm.ca or call 1-888-539-7474.

When SiriusXM is active, the channel name, number, song title, and artist appear on the display.

### SiriusXM with 360L

SiriusXM with 360L interface has enhanced in-vehicle listening experience for subscribers. The experience now offers more categories and system-learned recommendations toward discovering more personalized content.

To use the full SiriusXM 360L program, including streaming content and listening recommendations, OnStar Connected Access is required and Terms and Conditions must be accepted. No paid data subscription is required. Connected vehicle services vary by model and require a complete working electrical system, cell reception, and GPS signal.

Reference the SiriusXM user guide for use and subscription information.

### Playing SiriusXM Content

Touch ◀◀, ❚❚, ▶ or ▶▶ on the audio now playing screen to rewind, pause, play, or fast forward content.

### Finding a Channel

From the SiriusXM now playing screen, touch ◁CH or CH▷ to open the SiriusXM tuner channel list.

NOT FOR RESALE



To directly tune to a channel, touch the Tune icon to enter a channel number using the keypad.

### Browsing Content

Touch ☰ to view different browsing content, including:

Channels, Music, On Demand shows and episodes, Sports and News content.

### SiriusXM Settings

From the SiriusXM now playing screen, touch the user settings icon to display the SiriusXM settings.

The settings include subscription information, help and support, and listener preferences.

## Radio Reception

Unplug any electronic devices from the accessory power outlets if there is static interference.

### FM

FM signals only reach about 16 to 65 km (10 to 40 mi). Although the radio has a built-in electronic circuit that automatically works to reduce interference, some static can occur, especially around tall buildings or hills, causing the sound to fade in and out.

### AM

The range for most AM stations is greater than FM, especially at night. The longer range may also cause station frequencies to interfere with each other. Storms and power lines may also interfere with radio reception. Try reducing the treble on the radio if static interference occurs.

### SiriusXM Satellite Radio Service

If equipped, SiriusXM Satellite Radio Service provides digital radio reception. Tall buildings or hills can interfere with satellite radio signals, causing the sound to fade in and out. In addition, traveling or parking under heavy foliage, bridges, garages, or tunnels may cause loss of the SiriusXM signal for a period of time. Some cellular services may interfere with SiriusXM reception causing signal loss.

### Mobile Devices

Making or receiving calls, charging, or just having a mobile device on may cause static interference. Unplug or turn off any mobile devices if this happens.

## Multi-Band Antenna

The multi-band antenna may be used for radio, navigation, and other communication systems, depending on the equipped options. To ensure clear reception, keep the antenna clear of obstructions like snow and ice. An open sunroof or roof-mounted cargo can also affect reception.

# Audio Players

## Avoiding Untrusted Media Devices

Avoid using untrusted mobile and USB media devices that may negatively affect system operation or performance.

## USB Port

| Caution |
| --- |
| To avoid vehicle damage, unplug all accessories and disconnect all accessory cables from the vehicle when not in use. Accessory cables left plugged into the<br>(Continued) |

NOT FOR RESALE



**Caution (Continued)**

vehicle, unconnected to a device, could be damaged or cause an electrical short if the unconnected end comes in contact with liquids or another power source such as the accessory power outlet.

The vehicle may be equipped with multiple USB ports. Music may be played from a connected USB device. Data enabled ports are labeled as and may also be used for charging. Charging only ports are labeled as .

### USB Audio

To play music:

1. On the audio now playing screen, select Source> USB.
2. If there is no device connected, connect the device.
3. Supported media content will appear on the display.

## Bluetooth Audio

A connected Bluetooth mobile device can play music.

Use the infotainment controls to adjust volume and select songs. Check the volume setting on the infotainment system or the connected mobile device if Bluetooth is selected and no volume is present.

To play music via Bluetooth:

1. On the audio now playing page, touch source and select the desired Bluetooth mobile device.
2. If there is no mobile device connected, follow the screen prompts to pair the device.
3. Supported media content will appear on the display.

#### Manage Bluetooth Devices

Managing Bluetooth devices allows you to add, delete, or select another paired mobile device.

Only one Bluetooth mobile device can be active at a time.

Some mobile devices support sending Bluetooth music information to display on the radio. For more information about supported Bluetooth features, visit your brand website. See *Online Account and Customer Support* ⇨ *335* for details.

# Navigation

## Using the Navigation System

Google Maps provides the navigation software in this vehicle. This section provides a general overview and is subject to change. For the most current functional information, visit g.co/mapsincar.

To begin using the system, you must accept the Terms and Conditions.

#### Internet Connectivity

Google Maps requires an active subscription data plan to deliver full functionality, including offline map availability.

With an applicable connected services plan, Google Maps can automatically download offline maps before losing connectivity, allowing you to continue navigating without internet connectivity.

#### Profiles

Sign in to your Google Account to receive personalized services such as saved locations, custom maps, and real-time recommendations. Google Account information appears as available.

NOT FOR RESALE



To log into a profile, see Accounts under *Settings* ⇨ *149*.

**Voice Assistant**

If equipped, Google Maps can be controlled by voice commands. See *Voice Assistant (Google Gemini)* ⇨ *140 Voice Assistant (OnStar AI Assistant)* ⇨ *141*.

**Language and Units**

To change the language and units, see *Settings* ⇨ *149*.

**Mute Settings**

During active route guidance, Google Maps provides audible voice directions and traffic alerts. These can be muted as needed. In the Google Maps app, select Settings > Mute settings to access the guidance audio options. Alternatively, mute audible voice directions and traffic alerts by tapping the sound icon on the navigation map screen during active navigation.

**Compass**

You can adjust Google Maps orientation by selecting the compass icon. Select to change between the direction currently traveling, north, and route overview.

To recenter the map to the current location, select the location icon.

**Super Cruise**

If equipped, Super Cruise highlights routes in a specific outline. See *Super Cruise* ⇨ *201*.

## Maps

**Auto-Downloaded Maps**

Google Maps downloads maps automatically for use when not connected to the Internet. Offline maps make map data available to vehicle features regardless of connectivity.

To turn on auto-download:

1. Open Google Maps.
2. Touch the Settings icon.
3. Touch Privacy center, then select Offline maps.
4. Select Auto-download offline maps.
5. Check the Internet connection and wait for the download to finish.

**Downloading Offline Maps**

1. Open Google Maps.
2. Touch Settings, then Offline maps.
3. Touch the Select your own map square icon.
4. Adjust the map to cover the desired area to download.
5. Touch Download.

## Navigation Symbols

The following are the most common symbols that may appear in Google Maps.



This indicates the vehicle's current location and direction on the map.

NOT FOR RESALE





The destination pin marks the location of the final destination. Touch the pin to view the destination address or to add it or remove it from the Favorites list. Hide the information by touching the pin one more time. It will automatically time out if no action is taken.

A second pin in the menu is the route overview. Touch this pin to show more details of the destination or to remove the destination.

## Destination

### Searching for a Destination

A destination can be searched using Google Assistant.

To search for a destination without Google Assistant:

1. Open Google Maps.
2. Touch the Search field.
3. Enter the destination.
4. Touch the Navigation icon.

### Alternate Routes

Alternate routes are displayed as separate lines. While in either Turn-by-Turn navigation or on the route overview, touch the suggested alternate route.

### Adding a Stop on Route by Voice

1. While in Turn-by-Turn navigation, touch the Search icon at the bottom.
2. Touch the Google Assistant mic icon and say the destination to search by voice.
3. Select the desired search result from the list.
4. Touch the Add stop icon.

### Adding a Stop on Route by Category

1. While in Turn-by-Turn navigation, touch the Search icon at the bottom.
2. Select a category.
3. Select the desired search result from the list.
4. Touch the Add stop icon.

### Adding a Home or Work Address

To edit a home or work address, an account must be logged in. See Profiles and Accounts under *Settings* ⇨ *149*.

1. Open Google Maps.
2. Touch Settings, then touch Edit home or work.
3. Enter the address.

### Search by Category

Destinations can be searched by category, such as restaurant or grocery store.

1. Open Google Maps.
2. Touch the search bar.
3. Touch Categories, then select a category.
4. Touch the desired location, then touch the Navigation icon.

### Avoid Tolls, Highways, or Ferries

1. Open Google Maps.
2. Touch the Settings icon.
3. Select Route options.
4. Select the desired options and then touch X to close.

NOT FOR RESALE



**An Alternative Way for General Route Options**

1. During active route guidance, touch Route Overview.
2. Select Route options.
3. Select the desired option and then touch X to close.

**Traffic Layers**

1. Open Google Maps.
2. Touch the Settings icon.
3. Touch Traffic to turn on or off.

## Global Positioning System (GPS)

GPS uses satellite and various vehicle signals to determine the current vehicle position for the navigation system.

Interference from the satellite condition, road configuration, condition of the vehicle, and/or other circumstances can affect the navigation system's ability to determine the accurate position of the vehicle.

This system might not be available or interference can occur if any of the following are true:

- Signals are obstructed by tall buildings, trees, large trucks, or a tunnel.
- Satellites are being repaired or improved.

For more information if GPS is not functioning properly, see *Problems with Route Guidance* ⇨ *140*.

## Vehicle Positioning

At times, the position of the vehicle on the map could be inaccurate due to one or more of the following reasons:

- The road system changes.
- You are driving on slippery road surfaces such as sand, gravel, or snow.
- You are traveling on winding roads or long, straight roads.
- The vehicle is approaching a tall building or a large vehicle.
- The vehicle is running parallel to a freeway on surface streets.
- A vehicle carrier or ferry is transferring the vehicle.
- The current position calibration is set incorrectly.
- You are traveling at high speed.
- You are changing directions often, or the vehicle is on a turntable in a parking lot.
- You are driving into or exiting out of a parking lot, garage, or a lot with a roof.
- The vehicle is unable to receive a GPS signal.
- The vehicle has a roof carrier.
- The vehicle has tire traction devices.
- The vehicle has newly replaced or worn tires.
- The tire pressure is incorrect.
- The navigation system is using map data for the first time after an update.
- The 12-volt battery has been disconnected for several days.
- You are driving in heavy traffic at low speeds and the vehicle is stopping and starting repeatedly.

NOT FOR RESALE



## Problems with Route Guidance

Incorrect route guidance can occur under one or more of the following conditions:

- Missing a turn on the indicated road.
- Turning at an intersection.
- Recent changes to roads, or roads not listed in Maps.

Additionally, route guidance may be unavailable if:

- Using automatic rerouting for the next right or left turn.
- Regulations (time, season, construction zone, etc.) prohibit vehicle entry.
- The route is not found.

When navigating to a destination that does not pass through the set waypoint, the system may automatically recalculate the route to return to the waypoint.

To recalibrate the map position, park in a safe, open area free from large obstructions, with the vehicle on for two to five minutes until the position updates.

# Voice Assistant

## Voice Assistant (Google Gemini)

### Google Gemini

If equipped, Google Gemini lets you control supported media, messaging, navigation, and certain vehicle functions using voice commands. Not all features are supported by voice commands and some may require a valid data subscription.

#### Before You Start

Set Google Gemini as the default voice assistant to enable the feature. From the app screen on the infotainment display, select Settings > Assistant & Voice > Digital Assistant App > Google Gemini.

#### Using Google Gemini

1. Turn on your vehicle and wait for the system to initialize.
2. Start Google Gemini in any of the following ways:
   - Quickly press and release the voice command button on the steering wheel controls.
   - Select Google Gemini from the app screen on the infotainment display.
   - Say, "Hey Google" or "OK Google."
3. Clearly speak your request.

#### Canceling Google Gemini

Press the end call button on the steering wheel controls to cancel Google Gemini.

#### Using Voice Assistant to Control Vehicle Functions

You can use the voice assistant to control certain vehicle functions, such as media, navigation, and climate settings. To learn which vehicle functions you can control with your voice, ask the voice assistant. For example, say, “Hey Google, which vehicle functions can I control with my voice?”

Additionally, use the voice assistant to get vehicle information, such as tire pressure. For example, say, “Hey Google, what is my tire pressure?”

The voice assistant can provide information about how to use your vehicle, including information from the owner’s manual. For example, say, “Hey Google, how do I unlock the back door?”

NOT FOR RESALE



### Using Your Phone with Voice Assistant

To use voice commands to make a call or send a text through your phone, the phone must be paired with the vehicle using Bluetooth. See *Bluetooth (Pairing and Using a Phone)* ⇨ *143 Bluetooth (Overview)* ⇨ *142*.

Launch the voice assistant on the connected mobile phone by pressing and holding the voice command button on the steering wheel controls until you hear a response.

Clearly speak your request.

Example commands:

- Call [contact name].
- Call [phone number].
- Send a message to [contact name].

### Vehicle–Specific Information

Google Gemini may not be knowledgeable about every GM vehicle, and some features or responses may vary by vehicle and availability. For vehicle-specific information, always refer to this Owner's Manual and the in-vehicle displays.

## Voice Assistant (OnStar AI Assistant)

### OnStar AI Assistant

If equipped, OnStar AI Assistant lets you control supported media, messaging, navigation, certain vehicle functions or connect to an OnStar advisor using voice commands. Not all features are supported by voice commands and some may require a valid data subscription or access to external Wi-Fi.

### Using OnStar AI Assistant

1. Turn on your vehicle and wait for the system to initialize.
2. Start OnStar AI Assistant in either of the following ways:
   - Quickly press and release the voice command button on the steering wheel controls.
   - Say, “Hey OnStar” wake word, or other supported wake words configured for your OnStar AI Assistant.
3. Clearly speak your request.

### Canceling OnStar AI Assistant

Press the end call button on the steering wheel controls to cancel OnStar AI Assistant.

### Using Voice Assistant to Control Vehicle Functions

You can use the voice assistant to control certain vehicle functions, such as media, navigation, and climate settings. To learn which vehicle functions you can control with your voice, ask the voice assistant. For example, say, “Hey OnStar, which vehicle functions can I control with my voice?”

Additionally, use the voice assistant to get vehicle information, such as tire pressure and safety feature status. For example, say, “Hey OnStar, what is my tire pressure?”

The voice assistant can provide information about how to use your vehicle, including information from the owner’s manual. For example, say, “Hey OnStar, how do I unlock the back door?”

NOT FOR RESALE



### Using Your Phone with Voice Assistant

To use voice commands to make a call or send a text through your phone, the phone must be paired with the vehicle using Bluetooth. See *Bluetooth (Pairing and Using a Phone)* ⇨ *143 Bluetooth (Overview)* ⇨ *142*.

Launch the voice assistant on the connected mobile phone by pressing and holding the voice command button on the steering wheel controls until you hear a response.

Clearly speak your request.

Example commands:

- Call [contact name].
- Call [phone number].
- Send a message to [contact name].

### Vehicle–Specific Information

OnStar AI Assistant may not be knowledgeable about every GM vehicle, and some features or responses may vary by vehicle and availability. For vehicle-specific information, always refer to this Owner's Manual and the in-vehicle displays.

# Phone

## Bluetooth (Overview)

The vehicle's Bluetooth system can interact with a mobile device to:

- Place and receive calls in a hands-free mode.
- Share the device's address book or contact list with the vehicle.
- Stream audio (music, podcasts).
- Notify receipt and reply to text messages depending on phone type.

To minimize driver distraction, before driving, and with the vehicle parked:

- Become familiar with the features of the mobile device. Organize the phone book and contact lists clearly and delete duplicate or unused entries.
- Review the controls and operation of the infotainment system.
- Pair mobile device(s) to the vehicle. The system may not work with all mobile devices. See "Pairing" later in this section.

Vehicles with a Bluetooth system can use a Bluetooth-capable mobile device with a Hands-Free Profile to make and receive phone calls. The infotainment system and voice recognition are used to control the system. The system can be used while the vehicle is on. The range of the Bluetooth system can be up to 9.1 m (30 ft). Not all mobile devices support all functions and not all mobile devices work with the Bluetooth system. See *Online Account and Customer Support* ⇨ *335* for more information about compatible mobile devices.

### Controls

Use the controls on the infotainment display and the steering wheel to operate the Bluetooth system.

#### Steering Wheel Controls

: Press and hold until you hear a response from the phone's voice assistant to start voice recognition on your mobile phone that is connected through Bluetooth. If there is an incoming call, then a press and release will answer the call.

: Press to end a call, decline a call, or cancel an operation. Press to mute or unmute the infotainment system when not on a call.

NOT FOR RESALE



**Infotainment System Controls**

For information about how to navigate the menu system using the infotainment controls, see *Using the System* ⇨ *131*.

### Audio System

When using the Bluetooth system, sound comes through the vehicle's front audio system speakers and overrides the audio system. The volume level while on a mobile device phone call can be adjusted by pressing the steering wheel volume controls or the volume controls for the infotainment system. The adjusted volume level remains the same for later calls. The volume cannot be lowered beyond a certain level.

## Bluetooth (Pairing and Using a Phone)

### Pairing

A Bluetooth-enabled mobile device must be paired to the Bluetooth system and then connected to the vehicle before it can be used. See the mobile device manufacturer's user guide for Bluetooth functions before pairing the device.

**Pairing Information**

- Select the Phone icon on the infotainment app screen.
- If no mobile device has been paired, a message on the infotainment display will show the Manage Phones option. Select this option and the Phones screen will display. See “Pairing a Phone” later in this section.
- A mobile device with music capability can be paired to the vehicle as a phone and a music player at the same time.
- Up to 10 devices can be paired to the Bluetooth system.
- The pairing process is disabled when the vehicle is moving.
- Pairing only needs to be completed once, unless the pairing information on the mobile device changes or the phone is deleted from the system.
- If a previously paired mobile device is not connecting to the Bluetooth system, try forgetting the mobile device on the vehicle’s infotainment system and also forgetting the vehicle in the Bluetooth settings of the mobile device. Then repeat the pairing process.
- If multiple paired mobile devices are within range of the system, the system connects to the paired mobile device that is set to First to Connect. If there is no mobile device set to First to Connect, it will connect to the mobile device which was used last. To connect to a different paired mobile device, see “Connecting to a Different Phone” later in this section.

**Pairing a Phone**

1. Make sure Bluetooth has been enabled on the mobile device before starting the pairing process.
2. Select the Phone icon on the infotainment app screen.
3. If a mobile device has been previously added, select Settings > Connections > Phones to reach the device manager. From the device manager, select "Add Phone." If a phone has been previously added, the “Add Phone” card will just be a “+” button.
4. Select Manage Phones to display the Phones screen.

NOT FOR RESALE



5. Select Add Phone.

   If a mobile device has been previously added or disconnected, the "Add Phone" card will just be a "+" card.

6. Select the phone name on the infotainment screen of the vehicle name on the phone.
7. The code on both the mobile device and infotainment display need to be acknowledged for pairing to be successful.
8. Follow the instructions on the mobile device to confirm the six-digit code showing on the infotainment display and select Pair. The codes on the mobile device and infotainment display need to be acknowledged for pairing to be successful.
9. If a previously paired mobile device is not connecting to the Bluetooth system, try forgetting the mobile device on the vehicle's infotainment system and also forgetting the vehicle in the Bluetooth settings of the mobile device.
10. If the vehicle name does not appear on your mobile device under the "other devices" or "available devices" menu, there are a few ways to start the pairing process over:
    - Turn Bluetooth off then back on, on your mobile device.
    - Go back to the beginning of the Phone menus on the infotainment display and restart the pairing process.
    - Turn the mobile device off and then back on.
    - Reset the mobile device, but this step should be done as a last effort.
11. If the mobile device prompts to accept connection or allow phone book download, select Always Accept and Allow. The phone book may not be available if not accepted.
12. To pair additional mobile devices, select Settings > Connections > Phones.

**First to Connect Paired Phones**

If multiple paired mobile devices are within range of the system, the system connects to the paired phone that is set as First to Connect. To enable a paired mobile device as the First to Connect phone:

1. Make sure the mobile device is turned on.
2. Select the Settings icon on the infotainment app screen.
3. Select Connections.
4. Select Phone.
5. Select Options under the connected phone.
6. Select First to Connect from the phone's settings menu and set First to Connect to On.

Phones and mobile devices can be added, removed, connected, and disconnected. A sub-menu will display whenever a request is made to add or manage phones and mobile devices.

**Accessing the Device List Screen**

There are two ways to access the device list screen:

**Using the Settings Icon**

1. Select the Settings icon on the infotainment app screen or the Settings icon on the application tray near the left of the display.
2. Select Connections.
3. Select Phones.

**Using the Phone Icon**

1. Select the Phone icon on the infotainment app screen or the Phone icon on the application tray near the left of the display.

NOT FOR RESALE



2. Select ⚙ on the Phones screen.
3. Select Connected Phone.

**Disconnecting a Connected Phone**

To disconnect a phone:

1. Open the Device List Screen. See "Accessing the Device List Screen" previously in this section.
2. Select Option on the phone card to show the phone's or mobile device's settings.
3. Select the prompt to disconnect the phone.

**Deleting a Paired Phone**

To delete a paired phone:

1. Open the Device List Screen. See "Accessing the Device List Screen" previously in this section.
2. Select Option on the phone card to show the phone's or mobile device's settings.
3. Select Forget Phone.

**Connecting to a Different Phone**

To connect to a different phone, the new phone must be in the vehicle and paired to the Bluetooth system.

To connect to a different phone:

1. Open the Device List Screen. See "Accessing the Device List Screen" previously in this section.
2. Select the new phone you want to connect to from the list of available phones. See "First to Connect Paired Phones" previously in this section.

## Switching to Handset or Hands-Free Mode

To switch between handset or hands-free mode:

- While the active call is hands-free, select the Audio Output option, then select Phone to switch to the handset mode.

  The mute icon will not be available or functional while Handset mode is active.

- While the active call is on the handset, select the Audio Output option, then select Car Speakers to switch to the hands-free mode.

## Making a Call Using Contacts

Calls can be made through the Bluetooth system using personal phone contact information for all phones that support the Phone Book feature. Become familiar with the phone settings and operation and that the phone is set to allow the sharing of contacts over Bluetooth with the vehicle. Verify the phone supports this feature and that the phone is set to allow the sharing of contacts over Bluetooth with the vehicle.

The Contacts menu accesses the phone book stored in the phone.

To make a call using the Contacts menu:

1. Select the Phone icon on the infotainment app screen or on the application tray near the left of the display.
2. Select Contacts.

   If a contact has more than one assigned number, a window will appear with the option to choose a phone number from a list. Select the preferred number to call and then confirm if the selection is "Just once" or "Always." By choosing "Always" the selection made will remain the default number assigned to this contact for as long as the phone is connected to the vehicle.
3. There are two methods to search for contacts:

NOT FOR RESALE



- Search bar – Select the search icon on the top right of the Phones window and type the name or number of the contact on the keyboard. Search results will be displayed corresponding to the user input. Select the name to call.
- Scroll – Select the list and scroll, or use the scrollbar on the left side of the Phones window. Select the name to call.

### Making a Call Using the Recents Menu

The Recents menu accesses the recents call list from your phone.

To make a call using the Recents menu:

1. Select the Phone icon on the infotainment app screen or on the application tray near the left of the display.
2. Select Recents.
3. There are two methods for placing a call:
   - Select the name or phone number to call.
   - Select the contact card to the right of the name or phone number. Within the contact card select the phone number to call.

### Making a Call Using the Keypad

To make a call by dialing the numbers:

1. Select the Phone icon on the infotainment app screen or on the application tray near the left of the display.
2. Select Keypad and enter a phone number.
3. There are two methods for placing a call:
   - Select the phone icon in the keypad.
   - Select the contact name to the right of the keypad. If the phone number is stored with a contact, the contact will appear as the number is typed into the keypad.

### Searching Contacts Using the Keypad

To search for contacts using the keypad:

1. Select the Phone icon on the infotainment app screen.
2. Select Keypad and enter partial phone numbers or contact names using the digits on the keypad to search. Results appear on the right side of the display. Select one to place a call.

### Accepting or Declining a Call

When an incoming call is received, the infotainment system mutes and a ring tone is heard in the vehicle.

#### Accepting a Call

To Accept a call, select Answer on the infotainment display.

#### Declining a Call

To decline a call, press on the steering wheel controls or Decline on the infotainment display.

### Call Waiting, Merging, and Conferencing

Call waiting, merging, and conferencing must be supported on the Bluetooth mobile device and enabled by the wireless service carrier to work.

When an incoming call is received during an active call, press on the steering wheel controls or “Answer” from the infotainment display. This will answer the incoming call and place the active call on hold.

NOT FOR RESALE



To switch between the calls, select the Switch icon on the infotainment display.

To merge the calls, select "Merge" within the Active Call Screen on the infotainment display. This creates a three-way conference. If another call is received during a three-way conference, it can be answered, but it will place the conference on hold.

### Making a Call Using Favorites

1. Select the Phone icon on the infotainment app screen or on the application tray near the left of the display.
2. Select Favorites.
   - The vehicle can sync up to five favorites from the phone.
   - The vehicle can also store up to five additional contacts as vehicle favorites. These will be stored for as long as the phone is paired and connected. If the phone is unpaired/forgotten by the vehicle, the vehicle favorites will be deleted.

To add a favorite for the vehicle:

1. Select "Add Favorite."
2. Select a contact from the Phone Book.
3. Select the star icon next to the phone number to add as a favorite.

### Ending a Call

- Press on the steering wheel controls.
- Select on the infotainment display, next to a call, to end only that call.

### Dual Tone Multi-Frequency Tones

The in-vehicle Bluetooth system can send numbers during a call. This is used when calling a menu-driven phone system. Use the Keypad to enter the number.

## Apple CarPlay and Android Auto

If equipped, Apple CarPlay and/or Android Auto capability may be available through a compatible smartphone. If the phone is paired and projections are available, Apple CarPlay and/or Android Auto icons will become illuminated on the infotainment app screen.

To use Apple CarPlay and/or Android Auto:

**For Wired Phone Projection**

1. For Android 9 smartphones and older, download the Android Auto app to your phone from the Google Play Store. There is no app required for Apple CarPlay.
2. Connect your Android phone or Apple iPhone by using the factory-provided phone USB cable and plugging into a USB data port. For best performance, it is highly recommended to use the device's factory-provided USB cable, which should be replaced after significant wear to maintain connection quality. Aftermarket or third-party cables may not work.
3. When the phone is first connected, to activate Apple CarPlay or Android Auto, accept the terms and conditions on both the infotainment system and the phone.
4. Follow the instructions on the phone.

The Android Auto and Apple CarPlay icons on the infotainment app screen will illuminate. Android Auto and/or Apple CarPlay may automatically launch the next time the USB is connected. If not, select the Android Auto or Apple CarPlay icon on the infotainment app screen to launch.

NOT FOR RESALE



Press the home button on the center stack to return to the infotainment home screen.

**For Wireless Phone Projection**

Verify your phone is wireless compatible by visiting the Android Auto or Apple CarPlay support page.

1. For Android 9 smartphones and older, download the Android Auto app to your phone from the phones Google Play Store. There is no app required for Apple CarPlay.
2. For first time connection, make sure Bluetooth and Wi-Fi are turned on in phone settings. To connect the phone over Bluetooth, see *Bluetooth (Pairing and Using a Phone)* ⇨ *143 Bluetooth (Overview)* ⇨ *142*.
3. When the phone is first connected, to activate Apple CarPlay or Android Auto, agree to the terms and conditions on both the infotainment system and the phone.
4. Follow the instructions on the phone.

The Android Auto and Apple CarPlay icons on the infotainment app screen will illuminate. Android Auto and/or Apple CarPlay may automatically launch upon wireless connection. If not, select the Android Auto or Apple CarPlay icon on the infotainment app screen to launch.

Wireless CarPlay and/or Wireless Android Auto may experience occasional service disruption due to outside Wi-Fi interference.

To disconnect the phones wireless projection for that paired device:

1. Select the Settings from the infotainment app screen.
2. Select Connections.
3. Select Phones or Devices.
4. Select the Bluetooth icon or Options on the phone card.
5. Select Connection Type from the list and choose Bluetooth Calling and Media.

Press the home button on the center stack to return to the infotainment home screen.

Features are subject to change. For further information on how to set up Android Auto and Apple CarPlay in the vehicle, visit your brand website. See *Online Account and Customer Support* ⇨ *335* for details.

CarPlay will not support Fast Connect on iPhones with iOS version 13 or older.

Android Auto is provided by Google and is subject to Google's terms and privacy policy. Apple CarPlay is provided by Apple and is subject to Apple's terms and privacy policy. Data plan rates apply. For Android Auto support and to see if your phone is compatible, see www.android.com/auto/compatability. For Apple CarPlay support and to see if your phone is compatible, see www.apple.com/ios/carplay/. Apple or Google may change or suspend availability at any time. Google, Android, Android Auto, Google Maps, and other marks are trademarks of Google LLC. Apple CarPlay is a trademark of Apple Inc.

Press the home button on the center stack to exit Android Auto or Apple CarPlay. To enter back into Android Auto or Apple CarPlay, press and hold the home button on the center stack.

If applicable, Android Auto and/or Apple CarPlay may be disabled from the infotainment system. To do this, from the app screen select Settings > Connections. Scroll down the list to find Android Auto or Apple CarPlay. Use the On/Off toggle to turn Android Auto or Apple CarPlay on or off for the entire system.

NOT FOR RESALE



# Settings

To access the Settings menus:

1. Touch Settings on the infotainment home screen.
2. Touch the desired category to display a list of available options.
3. Touch to select the desired feature setting.
4. Touch the options on the infotainment display to change a setting.
5. Touch < to go back.

The Settings menu may contain the following:

## Connections

The menu may contain the following:

**Phones**

Allows connecting to a different cell phone or mobile device source, disconnecting a cell phone or media device, or deleting a cell phone or media device.

**Apple CarPlay**

Allows use of Apple CarPlay in your vehicle.

**Android Auto**

Allows use of Android Auto in your vehicle.

**Wi-Fi Networks**

Shows connected and available Wi-Fi networks.

**Wi-Fi Hotspot**

Allows adjustment of different Wi-Fi features.

**Vehicle-to-Phone Sharing**

Allows GM apps to use vehicle data on the listed phones shown.

**Trusted Device**

Allows for setting a phone as your trusted device to establish a secure communication channel between your phone and vehicle that enables convenient features like instant profile unlocking and account sign in. When your trusted device is nearby, the system automatically recognizes it through a unique Bluetooth connection.

## Vehicle

The menu may contain the following:

**Audio Settings**

Allows adjustment of different audio settings.

**Show Drive Mode Selection**

Allows adjustment of the Show Drive Mode Selection.

**Teen Driver**

See *Teen Driver* ⇨ *151*.

**Rear Seat Reminder**

Allows for an audible alert and a message when the rear door has been opened before or during operation of the vehicle.

**Buckle to Drive**

See *Buckle To Drive* ⇨ *47*.

**Super Cruise Lane Change**

See *Super Cruise* ⇨ *201*.

**Climate and Air Quality**

Allows adjustment of different climate settings.

**Collision/Detection Systems**

Allows adjustment of different driver assistance system settings.

NOT FOR RESALE



**Comfort and Convenience**

Allows adjustment of different comfort and convenience settings.

**Driver Attention Assist**

Allows adjustment of different sensitivity levels for drowsiness attention settings.

**Lighting**

Allows adjustment of different lighting settings.

**Power Door Locks**

Allows adjustment of different door lock settings.

**Remote Lock, Unlock, and Start**

Allows adjustment of different remote lock settings.

**Seating Position**

Allows adjustment of different seating position settings.

**Transport Mode**

Allows adjustment of transport mode settings.

### Notifications

Shows a list of installed apps and the permissions used.

### Apps and Permissions

Shows app settings and information.

### Date/Time

Allows setting of the clock.

### Display

Allows adjustment of the infotainment display.

### Sounds

Allows adjustment of the infotainment system sounds.

### Profiles and Accounts

Modifies the infotainment system's profiles and provides access to the accounts assigned to the currently active profile. Profiles can be setup and/or modified as Admin profiles or Guest profiles.

### Privacy

Allows adjustment of the infotainment privacy settings.

### Accessibility

Shows the accessibility information on the infotainment system.

### Assistant and Voice

Shows the assistant and voice settings.

### Security

Allows adjustment of the infotainment security settings.

### System

The menu may contain the following:

**Language**

This will set the display language used on the infotainment display.

**Keyboard and Speech**

Touch to change keyboard and speech settings.

**Units**

Touch to change units settings.

NOT FOR RESALE



**Reset Options**

Touch to change reset settings. The submenu "Erase Infotainment Data" is only accessible if the profile logged into the vehicle is configured as an "Admin."

**TTY Mode**

Touch to turn off or on.

**Storage**

This menu shows the storage info on the infotainment system.

**About**

Touch to view the infotainment system software information.

**Legal Information**

Touch to view legal and license information.

## Updates

See *How Your Vehicle is Updated* ⇨ *351*.

## Google

Allows adjustment of the Google settings.

## Teen Driver

If equipped, this allows multiple keys to be registered for beginner drivers to encourage safe driving habits. When the vehicle is started with a Teen Driver key, it will automatically activate certain safety systems, allow setting of some features, and limit the use of others. The Report Card will record vehicle data about driving behavior that can be viewed later. When the vehicle is started with a registered key, the Driver Information Center displays a message that Teen Driver is active.

**To access:**

1. From the infotainment apps screen, select Settings > Vehicle > Teen Driver.
2. Create a PIN by choosing a four-digit PIN. Re-enter the PIN to confirm. To change the PIN, touch Change PIN.

**The PIN is required to:**

- Set up/add or remove keys.
- Change Teen Driver settings.
- Change or clear the Teen Driver PIN.
- Access or delete Report Card data.

**Set up/add keys to activate Teen Driver and assign restrictions to the key:**

Any vehicle key can be registered, up to a maximum of eight keys. Label the key to tell it apart from the other keys.

**For a pushbutton start system:**

1. Start the vehicle.
2. For automatic transmissions, the vehicle must be in P (Park). For manual transmissions, the vehicle must be stopped with the parking brake set.
3. From the infotainment apps screen, select Settings > Vehicle > Teen Driver.
4. Enter the PIN.
5. Place the remote key you wish to register in the transmitter pocket. See *Remote Key Operation* ⇨ *8* for transmitter pocket location. The key does not need to be the one that started the vehicle.
6. From the Teen Driver menu, touch Setup Keys or Add/Remove Teen Driver Keys.

NOT FOR RESALE



- If the remote key has not previously been registered, the option to add the key displays. Touch Add and a confirmation message displays. Teen Driver restrictions will be applied whenever this remote key is used to operate the vehicle.
- If the remote key has already been registered, the option to remove the key displays. If Remove is touched, the remote key is no longer registered. A confirmation message displays, and Teen Driver restrictions will not be applied if this remote key is used to operate the vehicle.

In vehicles with a pushbutton start system, if a Teen Driver and a non-Teen Driver key are both present at start up, the vehicle will recognize the non-Teen Driver key to start the vehicle. The Teen Driver settings will not be active.

**For a keyed ignition system:**

1. Start the vehicle.
2. For automatic transmissions, the vehicle must be in P (Park). For manual transmissions, the vehicle must be stopped with the parking brake set.
3. From the infotainment apps screen, select Settings > Vehicle > Teen Driver.
4. Enter the PIN.
5. Touch Setup Keys or Add/Remove Teen Driver Keys. The system displays instructions for registering or unregistering a key. A confirmation message displays.

**Manage Settings or Teen Driver Settings**

Depending on the options of your vehicle, the following menu items may be displayed:

**Buckle to Drive :** When turned on, Buckle to Drive prevents the driver from shifting out of P (Park) for a period of time after the brake pedal is pressed if the driver, or on some vehicles the detected passenger, has not buckled their seat belt. On some vehicles, Buckle to Drive is always on when Teen Driver is active and is not configurable.

**Audio Volume Limit :** Allows a maximum audio volume to be set. Turn the audio volume limit on or off. Use the arrows to choose the maximum allowable level for the audio volume. On some infotainment systems, touch Set Audio Volume Limit to choose the maximum allowable audio volume level.

**Set Audio Volume Limit :** Use the arrows to choose the maximum allowable level for the audio volume.

**Teen Driver Speed Limiter :** Limits the maximum speed of the vehicle. When the speed limiter is turned on and the vehicle is started with a Teen Driver key, the Driver Information Center displays a message that the top speed is limited.

On certain vehicles, when the Speed Limiter is turned on, the vehicle's maximum acceleration will be limited. The Driver Information Center will display a message that the acceleration is limited.

**Teen Driver Speed Warning :** Displays a warning in the Driver Information Center when exceeding a selectable speed. Turn the speed warning on or off and choose the desired speed warning level. The speed warning does not limit the speed of the vehicle. On some infotainment systems, touch Set Teen Driver Speed Warning to set the warning speed.

**Set Teen Driver Speed Warning :** Choose the desired speed warning level. The speed warning does not limit the speed of the vehicle.

NOT FOR RESALE



**When Teen Driver is Active:**

- If equipped, the radio will mute when the driver seat belt, and in some vehicles the front passenger seat belt, is not buckled. The audio from any device paired to the vehicle will also be muted.
- An object placed on the front passenger seat, such as a briefcase, handbag, grocery bag, laptop, or other electronic device, could cause the passenger sensing system to falsely sense an unbuckled front passenger and mute the radio. If this happens, remove the object from the seat.
- Some safety systems, such as Automatic Emergency Braking, if equipped, cannot be turned off.
- The gap setting for Adaptive Cruise Control and alert timing for Forward Collision Alert, if equipped, cannot be changed.
- When trying to change a safety feature that is not configurable in Teen Driver, the feature may be grayed out or removed from the infotainment menu, or the Driver Information Center will display a message indicating that Teen Driver is active and the action is not available.
- Super Cruise, if equipped, is not available.
- Enhanced Low Fuel Warning (if equipped) – When the vehicle is low on fuel, the low fuel light on the instrument cluster flashes and the Driver Information Center low fuel warning cannot be dismissed.
- Do not tow a trailer if equipped with Automatic Emergency Braking.
- Daytime Running Lights or headlights are always on when the vehicle is shifted out of P (Park). Even if the headlight control is set to off or , the Automatic Headlight System is engaged and ensures that either the Daytime Running Lights or headlights come on based on outside light level.

**Report Card**

The vehicle owner must secure the driver's consent to record certain vehicle data when the vehicle is driven with a registered Teen Driver key. There is one Report Card per vehicle. Data is only recorded when a registered Teen Driver key is used to operate the vehicle.

The Report Card data is collected from the time Teen Driver is activated or the last time the Report Card was reset. The following items may be recorded:

- Distance Driven – the total distance driven.
- Maximum Speed – the maximum vehicle speed detected.
- Overspeed Warnings – the number of times the speed warning setting was exceeded.
- Wide Open Throttle – the number of times the accelerator pedal was pressed nearly all the way down.
- Forward Collision Alerts (if equipped) – the number of times the driver was notified when approaching a vehicle ahead too quickly and at potential risk for a crash.
- Forward Automatic Braking, also called Automatic Emergency Braking (if equipped) – the number of times the vehicle detected that a forward collision was imminent and applied the brakes.
- Reverse Automatic Braking (if equipped) – the number of times the vehicle detected that a rearward collision was imminent and applied the brakes.
- Traction Control – the number of times the Traction Control System activated to reduce wheel spin or loss of traction.
- Stability Control – the number of events which required the use of electronic stability control.

NOT FOR RESALE



- Antilock Braking System Active – the number of Antilock Brake System (ABS) activations.
- Tailgating Alerts (if equipped) – the number of times the driver was alerted for following a vehicle ahead too closely.

**Report Card Data**

Cumulative Data is saved for all trips until the Report Card is reset or until the maximum count is exceeded. If the maximum count is exceeded for a Report Card line item, that item will no longer be updated in the Report Card until it is reset. Each item will report a maximum of 1,000 counts. The distance driven will report a maximum of 64,374 km (40,000 mi).

To delete Report Card data, do one of the following:

- From the Report Card display, touch Reset.
- Touch Clear PIN and All Teen Driver Keys from the Teen Driver menu. This will also unregister any Teen Driver keys and delete the PIN.

**Forgotten PIN**

See your dealer to reset the PIN.

## Trademarks and License Agreements

Made for iPhone

"Made for iPhone" means that an electronic accessory has been designed to connect specifically to iPhone, and has been certified by the developer to meet Apple performance standards. Apple is not responsible for the operation of this device or its compliance with safety and regulatory standards. Please note that the use of this accessory with iPhone may affect wireless performance. iPhone is a trademark of Apple Inc., registered in the U.S. and other countries.

Android

Android is a trademark of Google LLC.

SiriusXM

Trial length and service availability may vary by model, model year, or trim. Service will automatically stop at the end of your trial subscription period unless you decide to continue service. If you do not wish to enjoy your trial, you can cancel by calling the number below. All SiriusXM services require a subscription, each sold separately by SiriusXM after the trial period. Service subject to the applicable SiriusXM Customer Agreement and Privacy Policy, visit www.siriusxm.com (USA) or www.siriusxm.ca (Canada) to see complete terms and how to cancel which includes calling 1-866-635-2349 (USA) or 1-888-539-7474 (Canada). Some services and features are subject to device capabilities and location availability. Content varies by SiriusXM subscription package. All fees, content, and features are subject to change.

NOT FOR RESALE



SiriusXM with 360L: Some features, including streaming content and listening recommendations, require an active OnStar Connected Access plan and may vary by vehicle model. Content varies by SiriusXM subscription plan. GM connected vehicle services vary by vehicle model and require active service plan, working electrical system, cell reception, and GPS signal. See onstar.com for details and limitations.

SiriusXM, Pandora, Stitcher, and all related logos are trademarks of SiriusXM Radio Inc. and its respective subsidiaries.

SiriusXM satellite service is only available in the 48 contiguous United States (and Puerto Rico with limited availability) and Canada.

In Canada: Some deterioration of service may occur in extreme northern latitudes. This is beyond the control of SiriusXM.

Explicit Language Notice: Channels with frequent explicit language are indicated with an "XL" after the channel name. Family-friendly packages are available by contacting SiriusXM:

- USA Customers — See www.siriusxm.com or call 1-888-601-6296.
- Canada Customers — See www.siriusxm.ca or call 1-877-438-9677.

It is prohibited to copy, decompile, disassemble, reverse engineer, hack, manipulate, or otherwise make available any technology or software incorporated in receivers compatible with the SiriusXM Satellite Radio System or that support the SiriusXM website, the Online Service, or any of its content.

General Requirements:

1. A License Agreement from SiriusXM is required for any product that incorporates SiriusXM Technology and/or for use of any of the SiriusXM marks to be manufactured, distributed, or marketed in the SiriusXM Service Area.
2. For products to be distributed, marketed, and/or sold in Canada, a separate agreement is required with SiriusXM Canada Inc.




TouchSense Technology and TouchSense System 1000 Series Licensed from Immersion Corporation. TouchSense System 1000 is protected under one or more of the U.S. Patents at the following address www.immersion.com/patent-marking.html and other patents pending.

**Bose**

Bose AudioPilot and Bose Centerpoint surround are registered trademarks of Bose Corporation in the U.S. and other countries.

**Bluetooth**

The Bluetooth word mark and logos are owned by the Bluetooth SIG, Inc. and any use of such marks by General Motors is under license. Other trademarks and trade names are those of their respective owners.

**Java**

Java is a registered trademark of Oracle and/or its affiliates.

**MPEG4–AVC (H.264)**

THIS PRODUCT IS LICENSED UNDER THE AVC PATENT PORTFOLIO LICENSE FOR THE PERSONAL AND NON-COMMERCIAL USE OF A CONSUMER TO (i) ENCODE VIDEO IN

NOT FOR RESALE



COMPLIANCE WITH THE AVC STANDARD ("AVC VIDEO") AND/OR (ii) DECODE AVC VIDEO THAT WAS ENCODED BY A CONSUMER ENGAGED IN A PERSONAL AND NON-COMMERCIAL ACTIVITY AND/OR WAS OBTAINED FROM A VIDEO PROVIDER LICENSED TO PROVIDE AVC VIDEO. NO LICENSE IS GRANTED OR SHALL BE IMPLIED FOR ANY OTHER USE. ADDITIONAL INFORMATION MAY BE OBTAINED FROM MPEG LA, L.L.C. SEE HTTPS://WWW.MPEGLA.COM.

**VC-1**

THIS PRODUCT IS LICENSED UNDER THE VC-1 PATENT PORTFOLIO LICENSE FOR THE PERSONAL AND NON-COMMERCIAL USE OF A CONSUMER TO (i) ENCODE VIDEO IN COMPLIANCE WITH THE VC-1 STANDARD ("VC-1 VIDEO") AND/OR (ii) DECODE VC-1 VIDEO THAT WAS ENCODED BY A CONSUMER ENGAGED IN A PERSONAL AND NON-COMMERCIAL ACTIVITY AND/OR WAS OBTAINED FROM A VIDEO PROVIDER LICENSED TO PROVIDE VC-1 VIDEO. NO LICENSE IS GRANTED OR SHALL BE IMPLIED FOR ANY OTHER USE. ADDITIONAL INFORMATION MAY BE OBTAINED FROM MPEG LA, L.L.C. SEE HTTPS://WWW.MPEGLA.COM.

**MPEG4–Visual**

USE OF THIS PRODUCT IN ANY MANNER THAT COMPLIES WITH THE MPEG-4 VISUAL STANDARD IS PROHIBITED, EXCEPT FOR USE BY A CONSUMER ENGAGING IN PERSONAL AND NON-COMMERCIAL ACTIVITIES.

**MP3**

MPEG Layer-3 audio coding technology licensed from Fraunhofer IIS and Thomson.

**WMV/WMA**

This product includes technology owned by Microsoft Corporation and under a license from Microsoft Licensing, GP. Use or distribution of such technology outside of this product is prohibited without a license from Microsoft Corporation and/or Microsoft Licensing, GP as applicable.

NOT FOR RESALE



# Climate Controls

**Climate Control Systems**
Dual Automatic Climate Control System ..157
Rear Climate Control System .....160
**Air Vents**
Air Vents .....161
**Maintenance**
Passenger Compartment Air Filter .....162
Service .....162

# Climate Control Systems

## Dual Automatic Climate Control System

The heating, cooling, and ventilation for the vehicle can be controlled with this system.

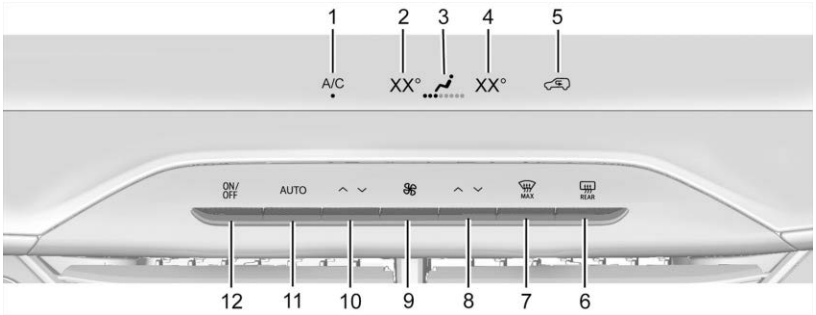


1. Air Conditioning (A/C)
2. Driver Temperature
3. Air Delivery Mode
4. Passenger Temperature
5. Recirculation
6. Rear Window Defogger
7. Defrost
8. Passenger Temperature Control
9. Fan Control
10. Driver Temperature Control
11. AUTO (Automatic Operation)
12. ON/OFF

**Automatic Operation**

The system automatically controls the fan speed, air delivery and air conditioning in order to heat or cool the vehicle to the desired temperature.

NOT FOR RESALE



When AUTO is lit, all four functions operate automatically. Each function can also be manually set and the selected setting is displayed. Functions not manually set will continue to be automatically controlled, even if the AUTO indicator is not lit.

For automatic operation:

1. Press AUTO.
2. Set the temperature. Allow the system time to stabilize. Adjust the temperature as needed for best comfort.

To improve fuel efficiency and to cool the vehicle faster with A/C on, recirculation may be automatically selected in warm weather. Press to select recirculation; press it again to select outside air.

**Driver and Passenger Temperature Controls:** The temperature can be adjusted separately for the driver and the passenger. Use the switches to increase or decrease the driver or passenger temperature setting.

**SYNC:** Press to link all passenger temperature settings to the driver setting. The SYNC indicator light will turn on. When the passenger settings are adjusted, the SYNC indicator light turns off.

**Manual Operation**

**ON/OFF:** Press to turn the fan off or on. When off is selected, the system will prevent air from flowing into the cabin. If on is selected, or any other button is pressed, the climate control system will turn on and return to delivering airflow as set. The temperature control and air delivery mode can still be adjusted.

: Press to increase or decrease the fan speed. The fan speed setting appears on the main display. Pressing any airflow mode button cancels automatic fan control and the fan is controlled manually. Press AUTO to return to automatic operation.

**Air Delivery Mode Controls:** In the climate control display, press , , or to change the direction of the airflow. Any combination of the three buttons can be selected. The current mode appears in the display. Pressing either button cancels automatic air delivery control and the direction of the airflow is controlled manually. Press AUTO to return to automatic operation.

To change the current mode, select one or more of the following modes:

: Clears the windows of fog or moisture. Air is directed to the windshield.

: Air is directed to the instrument panel outlets.

: Air is directed to the floor outlets.

**MAX:** Air is directed to the windshield, the fan runs at a higher speed, and the temperature of the air is increased if not already at maximum. This mode overrides the previous mode selected and clears fog or frost from the windshield more quickly. When the button is pressed again, the system returns to the previous mode setting and fan speed.

For best results, clear all snow and ice from the windshield before defrosting and do not use recirculation.

**A/C:** Press to turn the air conditioning system on or off. If the climate control system is turned off or the outside temperature falls below freezing, the air conditioner will not run.

Pressing this button cancels automatic air conditioning and turns off the air conditioner. Press AUTO to return to automatic operation and the air conditioner runs automatically as needed. When the indicator light is on, the air conditioner runs automatically to cool the air inside the vehicle or to dry the air needed to defog the windshield faster.

NOT FOR RESALE



: Press to turn on recirculation. An indicator light comes on. Air is recirculated to quickly cool the inside of the vehicle or to reduce the entry of outside air and odors.

If selected during cool or cold weather, the windshield and windows may fog. Turn off recirculation to help clear the windshield and windows.

**Auto Defog:** The climate control system may have a sensor to automatically detect high humidity inside the vehicle. When high humidity is detected, the climate control system may adjust to outside air supply and turn on the air conditioner. The fan speed may slightly increase to help prevent fogging. If the climate control system does not detect possible window fogging, it returns to normal operation.

To turn Auto Defog off or on, select Settings > Climate and Air Quality > Auto Defog > Select ON or OFF.

## Rear Window Defogger

| Caution |
| --- |
| Do not try to clear frost or other material from the inside of the front windshield and rear window with a razor blade or anything else that is sharp. This may damage the rear window defogger grid and affect the radio's ability to pick up stations clearly. The repairs would not be covered by the vehicle warranty. |

**REAR:** Press to turn the rear window defogger on or off. An indicator light on the button comes on to show that the rear window defogger is on. The rear window defogger only works when the ignition is on. The defogger turns off when the vehicle is off or in accessory mode.

The rear window defogger can be set to automatic operation. To turn Auto Defog off or on, select Settings > Climate and Air Quality > Auto Rear Defog > Select ON or OFF. When Auto Rear Defog is selected, the rear window defogger turns on automatically when the interior temperature is cold and the outside temperature is about 7 °C (44 °F) and below. The auto rear defogger turns off automatically.

If the vehicle is equipped with heated outside mirrors, they turn on when the rear window defogger button is on and help to clear fog or frost from the surface of the mirror. See *Heated Mirrors* ⇨ *26*.

If the vehicle is equipped with heated wiper parking, the feature will turn on when the rear window defogger button is on and help to clear frost from the wipers. See *Windshield Wiper/Washer* ⇨ *91*.

**Remote Start Climate Control Operation:** If equipped with remote start, the climate control system may run when the vehicle is started remotely. The system will use the defrost setting if it is cold outside or turn on using the coldest settings if it is hot outside. The rear defog may come on during remote start based on cold ambient conditions. The rear defog indicator light does not come on during a remote start.

NOT FOR RESALE



### Sensor

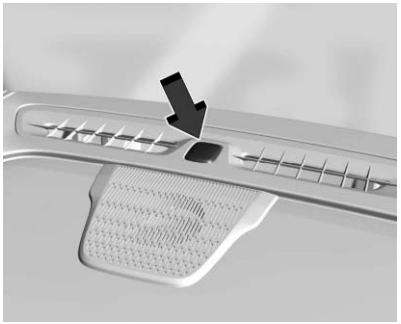

The solar sensor, on top of the instrument panel near the windshield, monitors the solar heat.

The climate control system uses the sensor information to adjust the temperature, fan speed, recirculation, and air delivery mode for best comfort.

Do not cover the sensor; otherwise the automatic climate control system may not work properly.

### Afterblow Feature

If equipped, under certain conditions, the fan may stay on or may turn on and off several times after you turn off and lock the vehicle. This is normal.

## Rear Climate Control System

The rear climate control system is on the rear of the center console. Adjust the settings with the rear climate control buttons, the rear climate display, or a voice assistant, if equipped.

To control the climate control system with a voice assistant, speak the assistant's wake word and then speak your desired commands. See *Voice Assistant (Google Gemini)* ⇨ *140 Voice Assistant (OnStar AI Assistant)* ⇨ *141*.

To control the climate control system with the rear climate control buttons or the rear climate display, read the following information.

NOT FOR RESALE



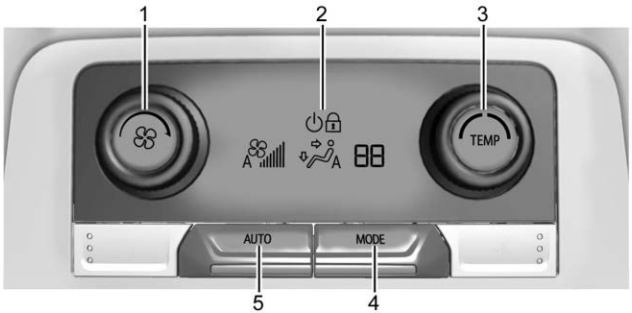


**Rear Climate Controls**

1. Fan Control
2. Rear Control Lockout
3. Rear Seat Passenger Temperature Controls
4. Air Delivery Mode Control
5. AUTO (Automatic Operation)

**Rear Control Lockout:** Touch to lock or unlock control of the rear climate control system from the rear seat passengers. When locked, the rear climate control can only be adjusted from the front seat.

**Automatic Operation**

**AUTO:** Press to turn on or off. The air delivery is controlled automatically. The AUTO indicator appears on the display. If the air delivery mode or fan speed is manually adjusted, this cancels full automatic operation.

**Manual Operation**

**:** Turn the knob clockwise or counterclockwise to increase or decrease the airflow to the rear panel outlets.

**Temperature Controls:** Turn the knob clockwise or counterclockwise to adjust the rear passenger temperature.

**Air Delivery Mode Control:** Press to select the desired air delivery mode. This changes the direction of the airflow in the rear seating area.

## Air Vents

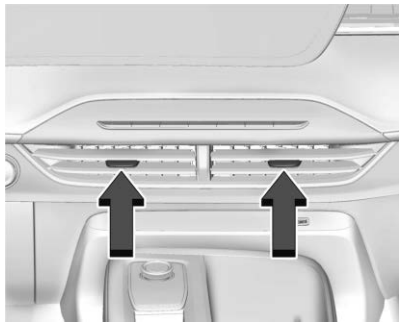

Move the center knobs on the air outlets to open or close off the airflow.

### Operation Tips

- Clear away any ice, snow, or leaves from the air inlets at the base of the windshield that can block the flow of air into the vehicle.
- Clear snow off the hood to improve visibility and help decrease moisture drawn into the vehicle.

NOT FOR RESALE



- Use of non-GM approved hood deflectors can adversely affect the performance of the system.
- Keep the path under all seats clear of objects to help circulate the air inside the vehicle more effectively.
- If fogging reoccurs while in vent or in a combination mode with mild temperature throughout the vehicle, turn on the air conditioner to reduce windshield fogging.

# Maintenance

## Passenger Compartment Air Filter

The filter removes dust, pollen, and other airborne irritants from outside air that is pulled into the vehicle.

The filter should be replaced as part of routine scheduled maintenance.

1. Open the glove box.



2. Push the rear center area of the glove box to lower beyond the stops.

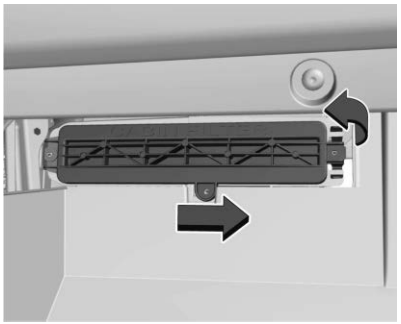

3. Release the latches on the service door. Open the service door and remove the old filter.
4. Install the new air filter. Ensure air filter orientation is correct.
5. Close the service door completely.
6. Reverse the steps to reinstall the glove box.

See your dealer if additional assistance is needed.

## Service

All vehicles have a label underhood that identifies the refrigerant used in the vehicle. The refrigerant system should only be serviced by trained and certified technicians. The air conditioning evaporator should never be repaired or replaced by one from a salvage vehicle. It should only be replaced by a new evaporator to ensure proper and safe operation.

During service, all refrigerants should be reclaimed with proper equipment. Venting refrigerants directly to the atmosphere is harmful to the environment and may

NOT FOR RESALE



also create unsafe conditions based on inhalation, combustion, frostbite, or other health-based concerns.

The air conditioning system requires periodic maintenance.

NOT FOR RESALE



# Driving and Operating


**Driving Information**
- Driving for Better Fuel Economy ..... 165
- Distracted Driving ..... 165
- Defensive Driving ..... 166
- Impaired Driving ..... 166
- Control of a Vehicle ..... 166
- Braking ..... 166
- Steering ..... 167
- Off-Road Recovery ..... 167
- Loss of Control ..... 168
- Off-Road Driving ..... 168
- Driving on Wet Roads ..... 169
- Hill and Mountain Roads ..... 170
- Winter Driving ..... 170
- If the Vehicle Is Stuck ..... 171
- Vehicle Load Limits ..... 172

**Starting and Operating**
- New Vehicle Break-In ..... 175
- Ignition Positions ..... 176
- Starting the Engine ..... 177
- Stop/Start System ..... 178
- Engine Heater ..... 179
- Retained Accessory Power (RAP) ..... 180
- Parking over Things That Burn ..... 180
- Extended Parking ..... 180

**Engine Exhaust**
- Engine Exhaust ..... 180
- Running the Vehicle While Parked ..... 181

**Automatic Transmission**
- Automatic Transmission ..... 181
- Manual Mode ..... 184

**Drive Systems**
- All-Wheel Drive ..... 185

**Brakes**
- Electric Brake Boost ..... 185
- Antilock Brake System (ABS) ..... 186
- Electric Parking Brake ..... 186
- Brake Assist ..... 187
- Post-Collision Braking (Secondary Collision Mitigation Braking) ..... 187
- Hill Start Assist (HSA) ..... 188
- Automatic Vehicle Hold (AVH) ..... 188

**Ride Control Systems**
- Traction Control/Electronic Stability Control ..... 188
- Driver Mode Control ..... 190

**Cruise Control**
- Adaptive Cruise Control (Advanced) ..... 191
- Super Cruise ..... 201

**Advanced Driver Assistance Systems**
- Advanced Driver Assistance Systems ..... 216
- Assistance Systems for Parking or Backing ..... 218
- Rear Vision Camera (RVC) ..... 218
- Surround Vision System ..... 219
- Park Assist ..... 220
- Automatic Parking Assist (APA) ..... 222
- Reverse Automatic Braking (RAB) ..... 224
- Rear Pedestrian Alert ..... 225
- Rear Cross Traffic Alert (RCTA) System ..... 226
- Assistance Systems for Driving ..... 228
- Forward Collision Alert (FCA) System ..... 228
- Automatic Emergency Braking (AEB) ..... 230
- Front Pedestrian Braking (FPB) System ..... 234
- Lane Change Alert (LCA) ..... 236
- Blind Zone Steering Assist (BZSA) ..... 238
- Traffic Sign Assistant ..... 239
- Driver Attention Assist ..... 240
- Lane Keep Assist (LKA) ..... 241
- Surround Vision Recorder ..... 243

**Fuel**
- Top Tier Fuel ..... 244
- Recommended Fuel ..... 244
- Prohibited Fuels ..... 244
- Fuels in Foreign Countries ..... 245
- Fuel Additives ..... 245
- Filling the Tank ..... 245
- Filling a Portable Fuel Container ..... 247

NOT FOR RESALE



**Trailer Towing**
General Towing Information ..... 247
**Conversions and Add-Ons**
Add-On Electrical Equipment .....248

# Driving Information

## Driving for Better Fuel Economy

Driving habits can affect fuel mileage. Here are some driving tips to get the best fuel economy possible.

- Set the climate controls to the desired temperature after the engine is started, or turn them off when not required.
- On AWD vehicles, two-wheel drive may provide better fuel economy. See *All-Wheel Drive* ⇨ *185*.
- Avoid fast starts and accelerate smoothly.
- Brake gradually and avoid abrupt stops.
- Avoid idling the engine for long periods of time.
- When road and weather conditions are appropriate, use cruise control.
- Always follow posted speed limits or drive more slowly when conditions require.
- Keep vehicle tires properly inflated.
- Combine several trips into a single trip.
- Replace the vehicle's tires with the same TPC Spec number molded into the tire's sidewall near the size.
- Follow recommended scheduled maintenance.

## Distracted Driving

**⚠ Warning**

Taking your eyes off the road too long or too often could cause a crash resulting in injury or death. Focus your attention on driving.

Distraction comes in many forms and can take your focus from driving. Exercise good judgment when engaging with vehicle functions. Limit activities that may divert attention away from the road. Many local governments have enacted laws regarding driver distraction. Become familiar with the local laws in your area.

To avoid distracted driving, keep your eyes on the road, keep your hands on the steering wheel, and focus your attention on driving.

- Do not use a phone in demanding driving situations. Use a hands-free method to place or receive necessary phone calls.

NOT FOR RESALE



- Watch the road. Do not read, take notes, or look up information on phones or other electronic devices.
- Designate a front seat passenger, if possible, to handle potential distractions.
- Become familiar with vehicle features before driving, such as programming favorite radio stations and adjusting climate control and seat settings.
- Program all trip information into any navigation device prior to driving.
- Wait until parked to retrieve items that have fallen to the floor.
- Stop or park the vehicle to tend to children.
- Keep pets in an appropriate carrier or restraint.
- Avoid stressful conversations while driving, whether with a passenger or on a cell phone.

Refer to the infotainment section for more information on using that system and the navigation system, if equipped, including pairing and using a cell phone.

## Defensive Driving

Defensive driving means to always expect the unexpected. The first step in driving defensively is to wear a seat belt. See *Seat Belts* ⇨ *46*.

- Assume that other road users (pedestrians, bicyclists, and other drivers) are going to be careless and make mistakes. Anticipate what they may do and be ready.
- Allow enough following distance between your vehicle and the vehicle in front of you.
- Focus on the task of driving.

## Impaired Driving

**⚠ Warning**

Drinking alcohol or taking drugs and then driving is very dangerous. Your reflexes, perceptions, attentiveness, and judgment can be affected by even a small amount of alcohol or drugs. You can have a serious — or even fatal — collision if you drive after drinking or taking drugs.

(Continued)

**Warning (Continued)**

Do not drive while under the influence of alcohol or drugs, or ride with a driver who has been drinking or is impaired by drugs. Find alternate transportation home; or if you are with a group, designate a driver who will remain sober.

Death and injury associated with impaired driving is a global tragedy.

## Control of a Vehicle

Braking, steering, and accelerating are important factors in helping to control a vehicle while driving.

## Braking

Braking action involves perception time and reaction time. Deciding to push the brake pedal is perception time. Actually doing it is reaction time.

Average driver reaction time is about three-quarters of a second. In that time, a vehicle moving at 100 km/h (60 mph) travels 20 m (66 ft) and may not have enough time to stop in an emergency.

NOT FOR RESALE



Tips for stopping safely include:

- Keep a safe following distance from the vehicle in front of you.
- Avoid needless heavy braking.
- Keep pace with traffic.

If a brake fault occurs, the brakes may lose power assist. Without power assist, the brake pedal will be harder to push, and it can take longer to stop the vehicle.

If the engine were to stall or stop while driving, the electric brake boost system maintains power assist for as long as the battery has sufficient voltage. Steer the vehicle out of the roadway and stop as soon as it is safe to do so. See *Electric Brake Boost* ⇨ *185*.

## Steering

**Caution**

To avoid damage to the steering system, do not drive over curbs, parking barriers, or similar objects at speeds greater than 3 km/h (1 mph). Use care when driving over other objects such as lane dividers

(Continued)

**Caution (Continued)**

and speed bumps. Damage caused by misuse of the vehicle is not covered by the vehicle warranty.

### Electric Power Steering

The vehicle has an electric power steering system, which reduces the effort needed to steer. It does not have power steering fluid. The system does not require regular maintenance.

If the vehicle experiences a system malfunction and loses power steering, it may require greater steering effort. Turning the steering wheel as far as it can go and holding it there with force for an extended period may also reduce power steering assist.

See your dealer if there is a problem with the electric power steering system.

### Curve Tips

- Reduce your speed before entering a curve.
- Take and maintain a safe and controlled speed through curves.
- Wait until the vehicle is out of the curve before gently accelerating into the straightaway.

### Steering in Emergencies

- In some situations, steering around a problem may be more effective than braking.
- You can hold both sides of the steering wheel to turn 180 degrees without removing a hand.
- The Antilock Brake System (ABS) allows steering while braking.

## Off-Road Recovery

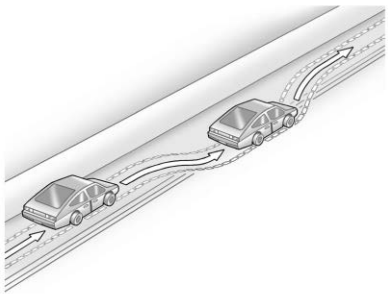

NOT FOR RESALE



The vehicle's right wheels can drop off the edge of a road onto the shoulder while driving. Follow these tips:

1. Ease off the accelerator and then, if there is nothing in the way, steer the vehicle so that it straddles the edge of the pavement.
2. Turn the steering wheel about one-eighth of a turn, until the right front tire contacts the pavement edge.
3. Turn the steering wheel to go straight down the roadway.

## Loss of Control

### Skidding

There are three types of skids that correspond to the vehicle's three control systems:

**Braking Skid:** Wheels are not rolling.

**Steering or Cornering Skid :** Too much speed or steering in a curve causes tires to slip and lose cornering force.

**Acceleration Skid :** Too much throttle causes the driving wheels to spin.

Antilock brakes help to avoid only the braking skid.

Defensive drivers avoid most skids by taking reasonable care suited to existing conditions, and by not exceeding those conditions. But skids are always possible.

If the vehicle starts to skid, follow these suggestions:

- Ease your foot off the accelerator pedal and steer the way you want the vehicle to go. The vehicle may straighten out, but if it skids again from oversteer, be ready to correct another skid if it occurs.
- Slow down and adjust your driving according to weather conditions. Stopping distance may be longer and vehicle control may be affected when traction is reduced by water, snow, ice, gravel, or other material on the road. Learn to recognize warning clues — such as enough water, ice, or packed snow on the road to make a mirrored surface — and slow down when you have any doubt.
- Try to avoid sudden steering, acceleration, or braking, including reducing vehicle speed by shifting to a lower gear. Any sudden changes could cause the tires to slide.

## Off-Road Driving

**⚠ Warning**

This vehicle is neither rated nor equipped for full off-road use. Attempting to drive in off-road conditions may be unsafe and can result in vehicle damage or personal injury.

**⚠ Warning**

Off-roading features are intended for use by experienced and qualified drivers. Uneven terrain and rough surfaces combined with improper driver inputs for the conditions may result in bouncing, quick changes in direction or loss of control of the vehicle, particularly when driving at higher speeds. You or others could be injured or killed. Always drive safely and exercise appropriate caution for the conditions. Always wear your seat belt.

If equipped with all-wheel drive (AWD), this vehicle may be used for light recreational driving away from paved roads. It should not be

NOT FOR RESALE



used in off-road conditions, as the AWD system is not the same as a traditional 4x4 system. See *All-Wheel Drive* ⇨ *185*.

This vehicle is equipped with all-season tires. Vehicles that are not equipped with all-terrain or On-Off Road tires must not be driven off-road except on a level, solid surface.

### Preparing to Drive Away from Paved Roads

Fuel the vehicle, fill fluid levels, and check inflation pressure in all tires, including the spare, if equipped.

Select Off-Road on the *Driver Mode Control* ⇨ *190* switch.

### Driving Guidelines

Use only established trails, roads, and areas that are reserved for public off-road recreational driving. Obey all posted regulations. Do not damage shrubs, flowers, trees, grasses, or disturb wildlife.

Do not drive up or down off-road inclines in this vehicle. Do not drive through mud, loose sand, packed snow, or deep water. This vehicle is not equipped to handle these conditions.

### After Driving Away from Paved Roads

Be sure to switch out of Off-Road mode to return to normal driving. Driving in Off-Road mode on normal roads could be dangerous or damage the vehicle. See *Driver Mode Control* ⇨ *190*.

## Driving on Wet Roads

**⚠ Warning**

Wet brakes can cause crashes. They might not work as well in a quick stop and could cause pulling to one side. You could lose control of the vehicle.

After driving through a large puddle of water or a car/vehicle wash, lightly apply the brake pedal until the brakes work normally.

Flowing or rushing water creates strong forces. Driving through flowing water could cause the vehicle to be carried away. If this happens, you and other vehicle occupants could drown. Do not ignore police warnings and be very cautious about trying to drive through flowing water.

Rain and wet roads can reduce traction and affect your ability to stop and accelerate. Always drive slower in these driving conditions and avoid driving through large puddles and deep-standing or flowing water.

### Hydroplaning

**⚠ Warning**

Hydroplaning can cause a loss of steering ability, leading to a crash. Slow down and follow these other instructions to help avoid hydroplaning on wet roads.

Hydroplaning can occur on wet roads if water builds up under the tires, causing them to have little to no contact with the road.

### Rainy Weather Tips

Besides slowing down, other wet weather driving tips include:

- Allow extra following distance.
- Pass with caution.
- Keep windshield wiping equipment in good condition.
- Fill the windshield washer fluid reservoir.

NOT FOR RESALE



- Maintain proper tire pressure and tread depth. See *Tires* ⇨ *280*.
- Turn off any cruise control system, if equipped. See *Adaptive Cruise Control (Advanced)* ⇨ *191* or *Super Cruise* ⇨ *201*.
- Activate All-Wheel Drive mode. See *Driver Mode Control* ⇨ *190*.
- Turn on the Traction Control System and StabiliTrak/Electronic Stability Control. See *Traction Control/Electronic Stability Control* ⇨ *188*.

## Hill and Mountain Roads

Driving on steep hills or through mountains is different than driving on flat or rolling terrain. Tips include:

- Keep the vehicle serviced and in good shape.
- Check all fluid levels, brakes, tires, cooling system, and transmission.
- Shift to a lower gear when going down steep or long hills.

**⚠ Warning**

Using the brakes to slow the vehicle on a long downhill slope can cause brake overheating, can reduce brake performance, and could result in a loss of braking. Shift the transmission to a lower gear to let the engine assist the brakes on a steep downhill slope.

**⚠ Warning**

Coasting downhill in N (Neutral) or with the ignition off is dangerous. This can cause overheating of the brakes and loss of steering assist. Always have the engine running and the vehicle in gear.

- Drive at speeds that keep the vehicle in its own lane. Do not swing wide or cross the center line.
- Be alert on top of hills; something could be in your lane (e.g., stalled car, crash).
- Pay attention to special road signs — for example, falling rocks area, winding roads, long grades, passing or no-passing zones — and take appropriate action.
- Operation of driver assistance systems may be affected by the terrain. See *Advanced Driver Assistance Systems* ⇨ *216*.
- If equipped, select All-Wheel Drive (AWD) mode for additional traction and control. See *All-Wheel Drive* ⇨ *185*.

## Winter Driving

### Driving on Snow or Ice

**Caution**

To avoid damage to the wheels and brake components, always clear snow and ice from inside the wheels and underneath the vehicle before driving.

Snow or ice between the tires and the road causes less traction or grip, so drive carefully. Wet ice can occur at about 0 °C (32 °F) when freezing rain begins to fall. Avoid driving on wet ice or in freezing rain until the roads are treated.

**For Slippery Road Driving:**

- Accelerate gently. Accelerating too quickly causes the wheels to spin and makes the surface under the tires slick.

NOT FOR RESALE



- Turn on Traction Control. See *Traction Control/Electronic Stability Control* ⇨ *188*.
- Allow greater following distance and watch for slippery spots. Icy patches can occur on otherwise clear roads in shaded areas. The surface of a curve or an overpass can remain icy when the surrounding roads are clear. Avoid sudden steering maneuvers and braking while on ice.
- Turn off cruise control.
- Activate All-Wheel Drive (AWD) Mode, if equipped; otherwise, select Snow/Ice Mode on the Driver Mode Control switch. See *All-Wheel Drive* ⇨ *185* and *Driver Mode Control* ⇨ *190*.
- Apply the brakes sooner than you would on dry pavement. The Antilock Brake System (ABS) improves vehicle stability during hard stops. See *Antilock Brake System (ABS)* ⇨ *186*.

### Blizzard Conditions

Stop the vehicle in a safe place and signal for help. Stay with the vehicle unless there is help nearby. If possible, use Roadside Assistance. See *Roadside Assistance Program* ⇨ *336*. To get help and keep everyone in the vehicle safe:

- Turn on the hazard warning flashers.
- Tie a red cloth to an outside mirror.

**⚠ Warning**

Snow can trap engine exhaust under the vehicle. This may cause exhaust gases to get inside. Engine exhaust contains carbon monoxide (CO), which cannot be seen or smelled. It can cause unconsciousness and even death.

If the vehicle is stuck in snow:

- Clear snow from the base of the vehicle, especially any blocking the exhaust pipe.
- Open a window about 5 cm (2 in) on the vehicle side that is away from the wind, to bring in fresh air.
- Fully open the air outlets on or under the instrument panel.
- Adjust the climate control system to circulate the air inside the vehicle and set the fan speed to the highest setting. See "Climate Control Systems."

For more information about CO, see *Engine Exhaust* ⇨ *180*.

To save fuel, run the engine for short periods to warm the vehicle and then shut the engine off and partially close the window. Moving about to keep warm also helps.

If it takes time for help to arrive, when running the engine, push the accelerator pedal slightly so the engine runs faster than the idle speed. This keeps the battery charged to restart the vehicle and to signal for help with the headlights. Do this as little as possible, to save fuel.

## If the Vehicle Is Stuck

**⚠ Warning**

If the vehicle's tires spin at high speed, they can explode, and you or others could be injured. The vehicle can overheat, causing an engine compartment fire or other damage. Spin the wheels as little as possible and avoid going above 56 km/h (35 mph).

Slowly and cautiously spin the wheels to free the vehicle when stuck in sand, mud, ice, or snow.

NOT FOR RESALE



If stuck too severely for the traction system to free the vehicle, turn the traction system off and use the rocking method. See *Traction Control/Electronic Stability Control* ⇨ *188*.

If equipped, select All-Wheel Drive (AWD) Mode. See *All-Wheel Drive* ⇨ *185*.

### Rocking the Vehicle to Get it Out

Turn the steering wheel left and right to clear the area around the front wheels. Turn off any traction system. Shift back and forth between R (Reverse) and a low forward gear, spinning the wheels as little as possible. To prevent transmission wear, wait until the wheels stop spinning before shifting gears. Release the accelerator pedal while shifting, and press lightly on the accelerator pedal when the transmission is in gear. Slowly spinning the wheels in the forward and reverse directions causes a rocking motion that could free the vehicle. If that does not get the vehicle out after a few tries, it might need to be towed out. If the vehicle does need to be towed out, see *Transporting a Disabled Vehicle* ⇨ *307*.

## Vehicle Load Limits

It is very important to know how much weight the vehicle can carry. This weight is called the vehicle capacity weight and includes the weight of all occupants, cargo, and all non-factory-installed options. Two labels on the vehicle may show how much weight it may properly carry, the Tire and Loading Information label and the Certification/Tire label.

**⚠ Warning**

Do not load the vehicle any heavier than the Gross Vehicle Weight Rating (GVWR), or either the maximum front or rear Gross Axle Weight Rating (GAWR). This can cause systems to break and change the way the vehicle handles. This could cause loss of control and a crash. Overloading can also reduce stopping performance, damage the tires, and shorten the life of the vehicle.

### Tire and Loading Information Label

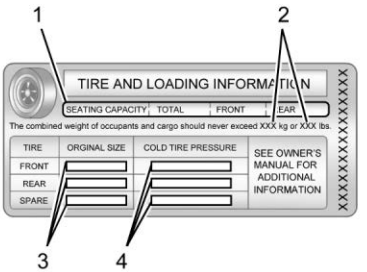


**Example Label**

A vehicle-specific Tire and Loading Information label is attached to the center pillar (B-pillar). The tire and loading information label shows the number of occupant seating positions (1), and the maximum vehicle capacity weight (2) in kilograms and pounds.

The Tire and Loading Information label also shows the size of the original equipment tires (3) and the recommended

NOT FOR RESALE



cold tire inflation pressures (4). For more information on tires and inflation see *Tires* ⇨ *280* and *Tire Pressure* ⇨ *285*.

There is also important loading information on the vehicle Certification/ Tire label. It may show the Gross Vehicle Weight Rating (GVWR) and the Gross Axle Weight Rating (GAWR) for the front and rear axle. See “Certification/Tire Label” later in this section.

**Steps for Determining Correct Load Limit**

1. Locate the statement "The combined weight of occupants and cargo should never exceed XXX kg or XXX lbs." on your vehicle’s placard.
2. Determine the combined weight of the driver and passengers that will be riding in your vehicle.
3. Subtract the combined weight of the driver and passengers from XXX kg or XXX lbs.
4. The resulting figure equals the available amount of cargo and luggage load capacity. For example, if the "XXX" amount equals 1400 lbs. and there will be five 150 lb passengers in your vehicle, the amount of available cargo and luggage load capacity is 650 lbs. (1400-750 (5 x 150) = 650 lbs.)
5. Determine the combined weight of luggage and cargo being loaded on the vehicle. That weight may not safely exceed the available cargo and luggage load capacity calculated in Step 4.
6. If your vehicle will be towing a trailer, load from your trailer will be transferred to your vehicle. Consult this manual to determine how this reduces the available cargo and luggage load capacity of your vehicle.

See *General Towing Information* ⇨ *247* for important information on towing a trailer, towing safety rules, and trailering tips.

If aftermarket accessories are installed on the vehicle, for example a rooftop carrier, be sure to add the weight of all installed accessories to the combined weight of luggage and cargo.

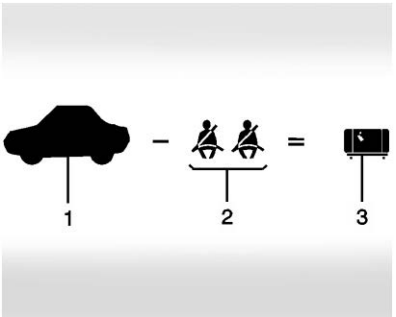


**Example 1**

1. Vehicle Capacity Weight for Example 1 = 453 kg (1,000 lb)

   Then subtract Accessory Weight, for example a rooftop cargo box = 15.8 kg (35 lb)
2. Subtract Occupant Weight @ 68 kg (150 lb) × 2 = 136 kg (300 lb)
3. Remaining available capacity for Cargo Weight = 301.2 kg (665 lb)

NOT FOR RESALE



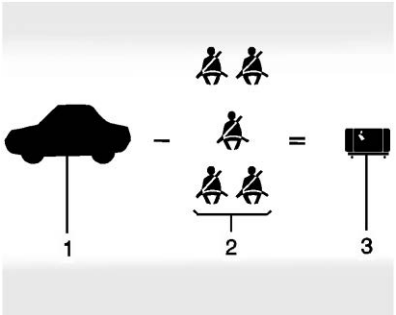


**Example 2**

1. Vehicle Capacity Weight for Example 2 = 453 kg (1,000 lb)

   Then subtract Accessory Weight, for example a rooftop cargo box = 18.1 kg (40 lb)
2. Subtract Occupant Weight @ 68 kg (150 lb) × 5 = 340 kg (750 lb)
3. Remaining available capacity for Cargo Weight = 94.9 kg (210 lb)

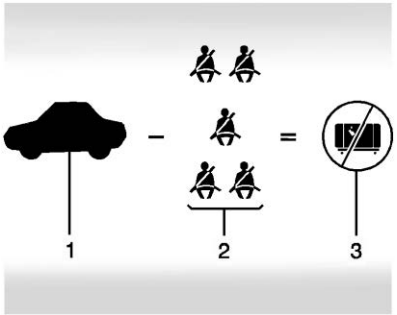


**Example 3**

1. Vehicle Capacity Weight for Example 3 = 453 kg (1,000 lbs)
2. Subtract Occupant Weight @ 91 kg (200 lbs) × 5 = 453 kg (1,000 lbs)
3. Available Cargo Weight = 0 kg (0 lbs)

Refer to the vehicle's tire and loading information label for specific information about the vehicle's capacity weight and seating positions. The combined weight of the driver, passengers, accessories, and cargo should never exceed the vehicle's capacity weight.

## Certification/Tire Label

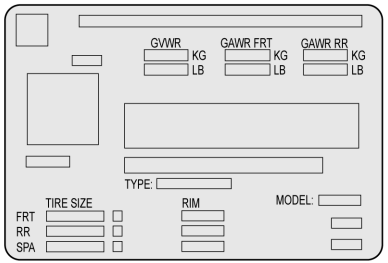


**Label Example**

A vehicle-specific Certification/Tire label is attached to the center pillar (B-pillar).

The label may show the size of the vehicle's original tires and the inflation pressures needed to obtain the gross weight capacity of the vehicle. The label shows the gross weight capacity of the vehicle. This is called the Gross Vehicle Weight Rating (GVWR). The GVWR includes the weight of the vehicle, all occupants, fuel, and cargo.

NOT FOR RESALE



The Certification/Tire label may also show the maximum weights for the front and rear axles, called the Gross Axle Weight Rating (GAWR). To find out the actual loads on the front and rear axles, weigh the vehicle at a weigh station. Your dealer can help with this. Be sure to spread the load equally on both sides of the centerline.

**Caution**

Overloading the vehicle may cause damage. Repairs would not be covered by the vehicle warranty. Do not overload the vehicle.

**⚠ Warning**

Things inside the vehicle can strike and injure people in a sudden stop or turn, or in a crash.

(Continued)

**Warning (Continued)**

- Put things in the cargo area of the vehicle. In the cargo area, put them as far forward as possible. Try to spread the weight evenly.
- Never stack heavier things, like suitcases, inside the vehicle so that some of them are above the tops of the seats.
- Do not leave an unsecured child restraint in the vehicle.
- Secure loose items in the vehicle.
- Do not leave a seat folded down unless needed.

# Starting and Operating

## New Vehicle Break-In

**Caution**

The vehicle does not need an elaborate break-in. But it will perform better in the long run if you follow these guidelines:

- Do not drive at any one constant speed, fast or slow, for the first 800 km (500 mi). Do not make full-throttle starts. Avoid downshifting to brake or slow the vehicle.
- Avoid making hard stops for the first 300 km (200 mi) or so. During this time the new brake linings are not yet broken in. Hard stops with new linings can mean premature wear and earlier replacement. Follow this breaking-in guideline every time you get new brake linings.

Following break-in, engine speed and load can be gradually increased.

On new vehicles, the various mechanical and electrical systems experience a “break-in” period during the first 6,400 km (4,000 miles)

NOT FOR RESALE



of routine driving. As the vehicle is driven, the mechanical systems adjust to provide optimal fuel economy and transmission shift performance.

Electrical systems will adapt and calibrate during the break-in period. A one-time occurrence of clicks and similar vehicle noises is normal during this process.

Normal driving charges the vehicle's battery to achieve the best operation of the vehicle, including fuel economy and the Stop/Start System. See *Stop/Start System* ⇨ *178*.

## Ignition Positions

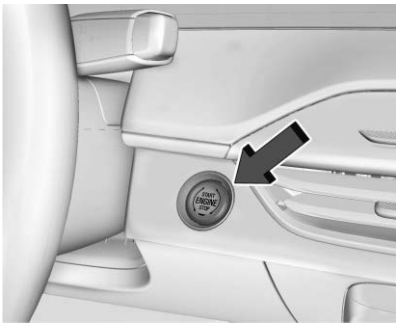

This vehicle has pushbutton starting.

The remote key must be in the vehicle for the system to operate. If the pushbutton start is not working, the vehicle may be near a strong radio antenna signal causing interference to the Keyless Access system. See *Remote Key Operation* ⇨ *8*.

To shift out of P (Park), the ignition must be on or in Service Mode and the brake pedal must be applied.

**Stopping the Engine/OFF (No Indicator Lights):** When the vehicle is stopped, press ENGINE START/STOP once to turn the engine off.

If the vehicle is in P (Park), the ignition will turn off, and Retained Accessory Power will remain active. See *Retained Accessory Power (RAP)* ⇨ *180*.

If the vehicle is not in P (Park), the ignition will return to ON/RUN mode and display the message SHIFT TO PARK in the Driver Information Center. When the vehicle is shifted into P (Park), the ignition will turn off.

Do not turn the engine off when the vehicle is moving unless there is an emergency. This may cause a loss of power assist in the brake and steering systems and may disable the airbags.

If the vehicle must be shut off in an emergency:

1. Brake using a firm and steady pressure. Do not pump the brakes repeatedly. This may deplete power assist, requiring increased brake pedal force.
2. Shift the vehicle to N (Neutral). This can be done while the vehicle is moving. After shifting to N (Neutral), firmly apply the brakes and steer the vehicle to a safe location.
3. Come to a complete stop, shift to P (Park), and turn the ignition off. The shift lever must be in P (Park) to turn the ignition off.
4. Set the electric parking brake. See *Electric Parking Brake* ⇨ *186*.

**⚠ Warning**

Turning off the vehicle while moving may cause loss of power assist in the brake and steering systems and may disable the airbags. While driving, only shut the vehicle off in an emergency.

If the vehicle cannot be pulled over, and must be shut off while driving, press and hold ENGINE START/STOP for longer than two seconds, or press twice in five seconds.

NOT FOR RESALE



**Accessory Mode (Amber Indicator Light):** This mode allows some electrical accessories to be used when the engine is off.

With the ignition off, pressing the button one time without the brake pedal applied will place the ignition system in accessory mode.

The ignition will switch from accessory mode to OFF after five minutes to prevent battery rundown.

**ON/RUN/START (Green Indicator Light):** This mode is for driving and starting. With the ignition off, and the brake pedal applied, pressing the button once will place the ignition system in ON/RUN/START. Once engine cranking begins, release the button. Engine cranking will continue until the engine starts. See *Starting the Engine* ⇨ 177. The ignition will then remain in ON/RUN.

**Service Mode**

This power mode is available for service and diagnostics, and to verify the proper operation of the malfunction indicator light as may be required for emission inspection purposes. With the vehicle off, and the brake pedal not applied, pressing and holding ENGINE START/STOP for more than five seconds will place the vehicle in Service Mode. The instruments and audio systems will operate as they do in ON/RUN, but the vehicle will not be able to be driven. The engine will not start in Service Mode. Press the button again to turn the vehicle off.

## Starting the Engine

| Caution |
| --- |
| Do not try to shift to P (Park) if the vehicle is moving. If you do, you could damage the transmission. Shift to P (Park) only when the vehicle is stopped. |

| Caution |
| --- |
| If you add electrical parts or accessories, you could change the way the vehicle operates. Any resulting damage would not be covered by the vehicle warranty. |

Place the transmission in P (Park) or N (Neutral). To restart the engine when the vehicle is already moving, use N (Neutral).

To start the vehicle:

| Caution |
| --- |
| Cranking the engine for long periods of time, by pressing ENGINE START/STOP immediately after cranking has ended, can overheat and damage the cranking motor, and drain the battery. Wait at least 15 seconds between each try, to let the cranking motor cool down. |

1. With the Keyless Access system, the remote key must be in the vehicle. Press ENGINE START/STOP with the brake pedal applied. When the engine begins cranking, let go of the button. The idle speed decreases as the engine warms up. Do not race the engine immediately after starting it.

   If the remote key is not in the vehicle, if there is interference, or if the remote key battery is low, the Driver Information Center will display a message.

2. If the engine does not start after 5 to 10 seconds, especially in very cold weather (below −18 °C or 0 °F), it could be flooded

NOT FOR RESALE



with too much gasoline. Try pushing the accelerator pedal all the way to the floor and hold it there, then press ENGINE START/STOP for up to a maximum of 15 seconds. Wait at least 15 seconds between each try, to allow the cranking motor to cool down. When the engine starts, let go of the button and the accelerator. If the vehicle starts briefly but then stops again, repeat the process. This clears the extra gasoline from the engine. Do not race the engine immediately after starting it. Operate the engine and transmission gently until the oil warms up and lubricates all moving parts.

## Stop/Start System

If equipped and enabled, the Auto Stop/Start feature shuts off the engine when the vehicle is at a stop to help conserve fuel.

**⚠ Warning**

The automatic engine Stop/Start feature causes the engine to shut off while the vehicle is still on. Do not exit the vehicle

(Continued)

**Warning (Continued)**

before shifting to P (Park). The vehicle may restart and move unexpectedly. Always shift to P (Park), and then turn the ignition off before exiting the vehicle.

When the brakes are applied and the vehicle is at a complete stop, the engine may turn off. When stopped, the tachometer displays AUTO STOP. When the brake pedal is released or the accelerator pedal is pressed, the engine will restart.

**Auto Stop/Start Deactivation Switch**

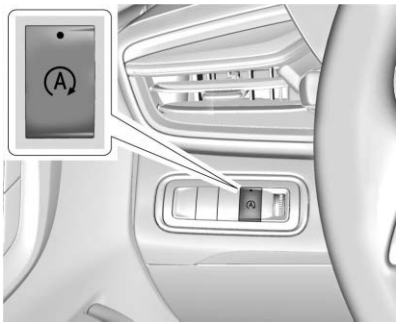

The Auto Stop/Start feature can be disabled and enabled by pressing Ⓐ. Stop/Start is enabled each time you start the vehicle.

When the Ⓐ indicator is illuminated, the system is enabled.

**Auto Stop/Start Availability**

Auto Stop/Start may or may not occur if:

- The climate control settings require the engine to be running to cool or heat the vehicle interior.
- The vehicle battery needs to charge.
- The vehicle battery was recently disconnected.
- Minimum vehicle speed has not been reached since the last Auto Stop.
- The accelerator pedal is pressed.
- The engine or transmission is not at the required operating temperature.
- The outside temperature is not in the required operating range.
- The vehicle is shifted out of D (Drive) to any gear other than P (Park).
- Certain driver modes have been selected. See *Driver Mode Control* ➪ *190*.

NOT FOR RESALE



- The vehicle is on a steep hill or grade.
- The driver door is open or the driver seat belt is unbuckled.
- The hood is open.
- The Auto Stop has reached the maximum allowed time.

## Engine Heater

**⚠ Warning**

Do not plug in the engine block heater while the vehicle is parked in a garage or under a carport. Property damage or personal injury may result. Always park the vehicle in a clear open area away from buildings or structures.

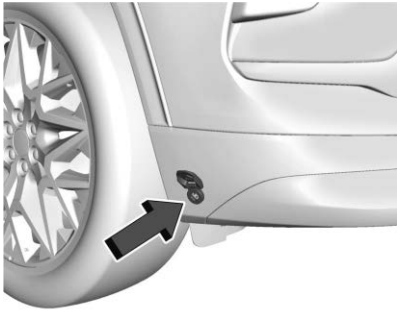

If equipped, the engine heater can provide easier starting and better fuel economy during engine warm-up in cold weather conditions at or below −18 °C (0 °F). An internal thermostat in the plug-end of the cord may exist, which will prevent engine heater operation at temperatures above −18 °C (0 °F).

### To Use the Engine Heater

**⚠ Warning**

Improper use of the heater cord or an extension cord can damage the cord and may result in overheating and fire.

(Continued)

**Warning (Continued)**

- Plug the cord into a three-prong electrical utility receptacle that is protected by a ground fault detection function. An ungrounded outlet could cause an electric shock.
- Use a weatherproof, heavy-duty, 15 amp-rated extension cord if needed. Failure to use the recommended extension cord in good operating condition, or using a damaged heater or extension cord, could make it overheat and cause a fire, property damage, electric shock, and injury.
- Do not operate the vehicle with the heater cord permanently attached to the vehicle. Possible heater cord and thermostat damage could occur.
- While in use, do not let the heater cord touch vehicle parts or sharp edges. Never close the hood on the heater cord.
- Before starting the vehicle, unplug the cord, reattach the cover to the plug, and securely fasten the cord. Keep the cord away from any moving parts.

NOT FOR RESALE



1. Ensure the engine is off.
2. Remove the heater cord from the rear compartment.
3. Check the heater cord for damage. If it is damaged, do not use it. See your dealer for a replacement.
4. Plug the cord into the receptacle in the front fascia.
5. Plug the other end of the cord into a normal, grounded 110-volt AC outlet.
6. Before starting the engine, be sure to unplug and store the cord.
7. Close the engine heater connector cover.

The length of time the heater should remain plugged in depends on several factors. For specific guidance, consult a local dealer near where you plan to park the vehicle.

## Retained Accessory Power (RAP)

When you turn off the vehicle, the following features (if equipped) will continue to function for up to 10 minutes, or until the driver door is opened. These features will also work when the vehicle is on or in accessory mode:

- Infotainment System
- Power Windows (during Retained Accessory Power this functionality will be lost when any door is opened)
- Sunroof (during Retained Accessory Power this functionality will be lost when any door is opened)
- Auxiliary Power Outlet (during Retained Accessory Power this functionality will be lost when any door is opened)
- Audio System
- OnStar System

## Parking over Things That Burn

**⚠ Warning**

Things that can burn could touch hot exhaust parts under the vehicle and ignite. Do not park over papers, leaves, dry grass, or other things that can burn.

## Extended Parking

It is best not to park with the vehicle running. If the vehicle is left running, be sure it will not move and there is adequate ventilation.

See *Automatic Transmission* ⇨ *181* and *Engine Exhaust* ⇨ *180*.

If the vehicle is left parked and running with the remote key outside the vehicle, it will continue to run for up to 15 minutes.

If the vehicle is left parked and running with the remote key inside the vehicle, it will continue to run for up to 30 minutes.

The vehicle could turn off sooner if it is parked on a hill, due to lack of available fuel.

The timer will reset if the vehicle is taken out of P (Park) while it is running.

# Engine Exhaust

**⚠ Warning**

Engine exhaust contains carbon monoxide (CO), which cannot be seen or smelled. Exposure to CO can cause unconsciousness and even death.

Exhaust may enter the vehicle if:

(Continued)

NOT FOR RESALE



**Warning (Continued)**

- The vehicle idles in areas with poor ventilation (parking garages, tunnels, deep snow that may block underbody airflow or tail pipes).
- The exhaust smells or sounds strange or different.
- The exhaust system leaks due to corrosion or damage.
- The vehicle exhaust system has been modified, damaged, or improperly repaired.
- There are holes or openings in the vehicle body from damage or aftermarket modifications that are not completely sealed.

If unusual fumes are detected or if it is suspected that exhaust is coming into the vehicle:

- Drive it only with the windows completely down.
- Have the vehicle repaired immediately.

(Continued)

**Warning (Continued)**

Never park the vehicle with the engine running in an enclosed area such as a garage or a building that has no fresh air ventilation.

## Running the Vehicle While Parked

It is better not to park with the engine running.

If the vehicle is left with the engine running, follow the proper steps to be sure the vehicle will not move. See *Automatic Transmission* ⇨ *181* and *Engine Exhaust* ⇨ *180*.

# Automatic Transmission




**Automatic Transmission Shift Pattern**

- The shift pattern is displayed on the front of the shift lever.
- The selected gear position will illuminate red, while others are displayed in white.
- In frigid conditions, the indicator may blink until fully engaged.

**Shifter Positions**

**P (Park):** Use this position when starting the vehicle to ensure the vehicle does not move. This position locks the drive wheels.

**R (Reverse):** Use this gear position to back up.

**N (Neutral):** In this gear position, the engine does not connect with the wheels. To restart the engine when the vehicle is already moving, use N (Neutral) only.

**D (Drive):** Use this gear position for normal driving.

**L (Low):** This gear position provides additional coast braking for downhill driving, trailer towing, or hauling a heavy load. See *Manual Mode* ⇨ *184*.

**Shifting Into Gear Positions**

1. Ensure the engine is running.
2. Apply the brake pedal.

NOT FOR RESALE



3. Move the shift lever to the desired position.

   After releasing the shift lever, it will return to the center position.

   The P indicator will turn white and the selected gear indicator on the shift lever will turn red when the vehicle is no longer in P (Park).

If you cannot shift out of P (Park), check the Driver Information Center for an issue message. If you have followed Steps 1–3 as directed and your vehicle will still not shift out of P (Park), see your dealer for service.

**Shifting Into Park**

**⚠ Warning**

Parking on grades with poor traction such as ice, snow, mud, or gravel may cause the vehicle to unintentionally move and could result in injury, death, and/or vehicle damage. Be sure to apply the parking brake. See *Electric Parking Brake* ⇨ *186*.

1. Apply the brake pedal and set the parking brake. See *Electric Parking Brake* ⇨ *186*.
2. Press the P (Park) switch at the end of the shift lever.
3. When the vehicle is stopped, press ENGINE START/STOP to turn off the vehicle. The vehicle will shift to P (Park) automatically unless the vehicle is in N (Neutral), see "Car Wash Mode" later in this section.
4. The P indicator on the shift lever will turn red when the vehicle is in P (Park).

If the vehicle is shifted into P (Park) on a hill, the parking brake may apply automatically. The driver may not be able to release the parking brake using the parking brake switch. It should automatically release when the vehicle is shifted out of P (Park).

**Leaving the Vehicle with the Engine Running**

**⚠ Warning**

It can be dangerous to leave the vehicle with the engine running. It could overheat and catch fire.

It is dangerous to get out of the vehicle if the vehicle is not in P (Park) with the parking brake firmly set. The vehicle can roll.

(Continued)

**Warning (Continued)**

Do not leave the vehicle when the engine is running. If you have left the engine running, the vehicle can move suddenly. You or others could be injured. To be sure the vehicle will not move, even when you are on fairly level ground, always set the parking brake and shift to P (Park).

If you must leave the vehicle with the engine running, be sure the vehicle is in P (Park) and the parking brake is set. After pressing the P (Park) switch, hold the regular brake pedal down. If you cannot see the P (Park) indicator in the instrument cluster, it means that the vehicle has not shifted to P (Park). Repeat the process until the vehicle is safely shifted into P (Park).

**Service Shift Lever Message**

A SERVICE SHIFTER SEE OWNER'S MANUAL message indicates an issue with the shift lever. If this message is a result of the vehicle automatically shifting into P (Park) and you need to move your vehicle to a safe location, try holding the shift lever in D (Drive) or R (Reverse) until the speed exceeds 16 km/h (10 mph). Have the vehicle serviced as soon as possible.

NOT FOR RESALE



**R (Reverse):**

To shift into R (Reverse):

1. Bring the vehicle to a complete stop.
2. From the center position, move the shift lever rearward toward you, and then up.

If the vehicle is shifted from either R (Reverse) to D (Drive) or L (Low), or D (Drive) or L (Low) to R (Reverse) while at a high speed, the vehicle may shift to N (Neutral). Decelerate and try the shift again.

At low vehicle speeds, R (Reverse) can be used to rock the vehicle back and forth to get out of snow, ice, or sand without damaging the transmission. See *If the Vehicle Is Stuck* ⇨ *171*.

**D (Drive):**

**Caution**

A transmission hot message may display if the automatic transmission fluid is too hot. Driving under this condition can damage the vehicle. Stop and idle the engine to cool the automatic transmission fluid. This message clears when the transmission fluid has cooled sufficiently.

**Caution**

Spinning the tires or holding the vehicle in one place on a hill using only the accelerator pedal may damage the transmission. The repair will not be covered by the vehicle warranty. If the vehicle is stuck, do not spin the tires. When stopping on a hill, use the brakes to hold the vehicle in place.

To shift into D (Drive):

1. Ensure the vehicle is at a complete stop.
2. From the center position, move the shift lever rearward and then down.

**N (Neutral):**

**Caution**

The vehicle is not designed to stay in N (Neutral) for extended periods of time. It will automatically shift into P (Park).

To shift into N (Neutral), move the shift lever rearward. If the vehicle is in P (Park), apply the brake pedal while moving the shift lever rearward.

If you press ENGINE START/STOP twice while at high speed, the engine will turn off and the transmission will automatically shift to N (Neutral). Once the vehicle is stopped, shift to P (Park) and the vehicle will turn off.

### Car Wash Mode

The Car Wash mode allows the vehicle to remain in N (Neutral) for use in automatic car washes. Do not use Car Wash mode for vehicle towing. If the vehicle needs to be towed, see *Transporting a Disabled Vehicle* ⇨ *307*.

**Car Wash Mode (Engine Off – Driver In Vehicle)**

To place the vehicle in N (Neutral) with the engine off and vehicle occupied:

1. Drive to the car wash entrance.
2. Apply the brake pedal.
3. Shift to N (Neutral).
4. Turn off the engine and release the brake pedal.
5. The indicator should continue to show N. If it does not, repeat Steps 2–4.

NOT FOR RESALE



**Car Wash Mode (Engine Off – Driver Out of Vehicle)**

To place the vehicle in N (Neutral) with the engine off and vehicle unoccupied:

1. Drive to the car wash entrance.
2. Apply the brake pedal.
3. Open the door.
4. Shift to N (Neutral).
5. Turn off the engine and release the brake pedal.
6. The indicator should continue to show N. If it does not, repeat Steps 2–5.
7. Exit the vehicle and close the door.

**Car Wash Mode (Engine On – Driver In Vehicle)**

To place the vehicle in N (Neutral) with the engine on and vehicle occupied:

1. Drive to the car wash entrance.
2. Apply the brake pedal.
3. Shift to N (Neutral).
4. Release the brake pedal.

**Car Wash Mode (Engine On – Driver Out of Vehicle)**

To place the vehicle in N (Neutral) with the engine on and vehicle unoccupied:

1. Drive to the car wash entrance.
2. Apply the brake pedal.
3. Open the door.
4. Shift to N (Neutral), then release the brake pedal.
5. The indicator should continue to show N. If it does not, repeat Steps 2–4.
6. Exit the vehicle and close the door.
7. The vehicle may automatically shift into P (Park) upon reentry.

## Manual Mode

### Electronic Range Select

| Caution |
| --- |
| Driving with the engine at a high rpm without upshifting while using Manual Mode, could damage the vehicle. Always upshift when necessary while using Manual Mode. |

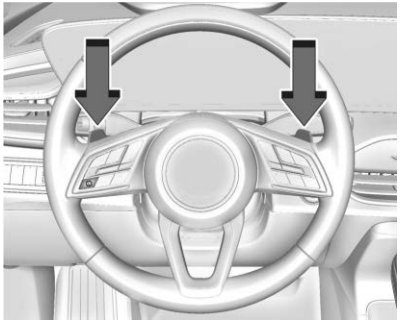

Electronic Range Select mode allows for the selection of the range of gear positions. Use this mode when driving downhill or towing a trailer to limit the top gear and vehicle speed. The shift position indicator within the Driver Information Center will display a number next to the L indicating the highest available gear.

To enter Manual mode:

1. With the vehicle in D (Drive), press the L (Low) button on steering wheel. The L in the instrument cluster will be highlighted and the D in the shift pattern will be unhighlighted.

NOT FOR RESALE



2. Tap the left steering wheel control to reduce the highest gear available, or the right control to increase the highest gear available.
3. To exit L (Low) and shift into D (Drive), shift to D (Drive) or press the L (Low) button. The D in the shift pattern will illuminate in red and the L in the instrument cluster will be unhighlighted.

When shifting to L (Low), the transmission will shift to a preset lower gear range. For this preset range, the highest gear available will be displayed next to the L in the Driver Information Center. See *Driver Information Center (DIC)* ⇨ *111*. All gears below that number are available to use. For example, when 4 (Fourth) is shown next to the L, 1 (First) through 4 (Fourth) gears are shifted automatically. To shift to 5 (Fifth) gear, tap the right steering wheel control or shift into D (Drive).

L (Low) will prevent shifting to a lower gear range if the engine speed is too high. If the vehicle speed is not reduced within the time allowed, the lower gear range shift will not be completed. Slow the vehicle, then tap the left steering wheel control to the desired lower gear range.

Cruise control can be used while in Manual mode.

# Drive Systems

## All-Wheel Drive

If equipped, the All-Wheel Drive System maximizes driving efficiency by delivering power, as required, to all four wheels for improved traction and control.




Press the switch to activate the All-Wheel Drive System. The indicator flashes briefly while the system engages and stays lit when the system is active. See *All-Wheel-Drive Light* ⇨ *105*.

All-wheel drive (AWD) automatically activates when certain modes are selected. See *Driver Mode Control* ⇨ *190*.

Using a compact spare tire on an all-wheel drive (AWD) vehicle will reduce performance. To restore full all-wheel drive (AWD) operation, replace the compact spare with a full-size tire as soon as possible. See *Compact Spare Tire* ⇨ *304*.

Always take care to adjust your driving style to the traffic and road conditions when using all-wheel drive (AWD).

# Brakes

## Electric Brake Boost

Vehicles equipped with electric brake boost have hydraulic brake circuits that are electronically controlled when the brake pedal is applied during normal operation. The system performs routine tests and turns off within a few minutes after the vehicle is turned off. Noise may be heard during this time. If the brake pedal is pressed during the tests or when the electric brake boost system is off, a noticeable change in pedal force and travel may be felt. This is normal.

NOT FOR RESALE



## Antilock Brake System (ABS)

The Antilock Brake System helps to prevent skidding and maintain steering control during hard braking.




If there is a problem, the Antilock Brake System warning light stays on. See *Antilock Brake System (ABS) Warning Light* ⇨ *105*.

### Using Antilock Brakes

Do not pump the brakes. Just hold the brake pedal down firmly. It is normal to hear and feel the Antilock Brake System operating.

### Braking in Emergencies

The Antilock Brake System does not always decrease stopping distance. If a vehicle suddenly slows or stops, there may not be enough time to apply the brakes. Always allow enough following distance between your vehicle and the vehicle ahead.

The Antilock Brake System allows you to steer and brake at the same time. In many emergencies, steering to make an evasive maneuver can be more effective than braking.

## Electric Parking Brake

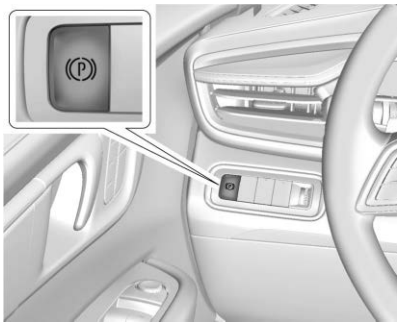


The Electric Parking Brake can always be applied, even if the vehicle is off. In case of insufficient electrical power, the Electric Parking Brake cannot be applied or released. To prevent draining the battery, avoid unnecessary repeated cycles of the Electric Parking Brake.

The system has a red parking brake status light and an amber service parking brake warning light. See *Electric Parking Brake Light* ⇨ *104* and *Service Electric Parking Brake Light* ⇨ *104*. There are also parking brake-related Driver Information Center messages.

Before leaving the vehicle, check the red parking brake status light to ensure that the parking brake is applied.

### Electric Parking Brake Apply

| Caution |
| --- |
| Driving with the parking brake on can overheat the brake system and cause premature wear or damage to brake system parts. Make sure that the parking brake is fully released and the brake warning light is off before driving. |

To apply the Electric Parking Brake:

1. Be sure the vehicle is at a complete stop.
2. Press the Electric Parking Brake switch momentarily.

NOT FOR RESALE



The red parking brake status light will flash and then stay on once the Electric Parking Brake is fully applied. If the red parking brake status light flashes continuously, then the Electric Parking Brake is only partially applied or there is a problem with the Electric Parking Brake. A Driver Information Center message will display. Release the Electric Parking Brake and try to apply it again. If the light does not come on, or keeps flashing, have the vehicle serviced. Do not drive the vehicle if the red parking brake status light is flashing, see your dealer.

If the amber service parking brake warning light is on, press the Electric Parking Brake switch. Continue to hold the switch until the red parking brake status light remains on. If the amber service parking brake warning light is on, see your dealer.

If the Electric Parking Brake is applied while the vehicle is moving, the vehicle will decelerate as long as the switch is pressed. If the switch is pressed until the vehicle comes to a stop, the Electric Parking Brake will remain applied.

The vehicle may automatically apply the Electric Parking Brake in some situations when the vehicle is not moving. This is normal, and is done to periodically check the correct operation of the Electric Parking Brake system, or at the request of other safety functions that utilize the Electric Parking Brake.

If the Electric Parking Brake fails to apply, block the rear wheels to prevent vehicle movement.

### Electric Parking Brake Release

To release the Electric Parking Brake:

1. Turn the vehicle on.
2. Apply and hold the brake pedal.
3. Press the Electric Parking Brake switch momentarily.

The Electric Parking Brake is released when the red parking brake status light is off.

If the amber service parking brake warning light is on, release the Electric Parking Brake by pressing and holding the Electric Parking Brake switch. Continue to hold the switch until the red parking brake status light is off. If either light stays on after release is attempted, see your dealer.

### Automatic Electric Parking Brake Release

The Electric Parking Brake will automatically release if the vehicle is running, placed into gear, and an attempt is made to drive away. Avoid rapid acceleration when the Electric Parking Brake is applied, to preserve parking brake lining life.

## Brake Assist

Brake Assist detects rapid brake pedal applications due to emergency braking situations. It also provides additional braking to activate the Antilock Brake System if the brake pedal is not applied hard enough to activate it normally. Minor noise, brake pedal pulsation, and/or pedal movement during this time may occur. Continue to apply the brake pedal as the driving situation dictates. Brake Assist disengages when the brake pedal is released.

## Post-Collision Braking (Secondary Collision Mitigation Braking)

This vehicle has a post-collision braking feature that may automatically engage to help slow your vehicle down after a crash. The feature may be disengaged by fully pressing the brake or accelerator pedal.

NOT FOR RESALE



## Hill Start Assist (HSA)

**⚠ Warning**

Do not rely on the HSA feature. HSA does not replace the need to pay attention and drive safely. You may not hear or feel alerts or warnings provided by this system. Failure to use proper care when driving may result in injury, death, or vehicle damage. See *Defensive Driving* ⇨ *166*.

When the vehicle is stopped on a grade, Hill Start Assist prevents the vehicle from rolling in an unintended direction during the transition from brake pedal release to accelerator pedal apply. The brakes release when the accelerator pedal is applied. If the accelerator pedal is not applied within a few minutes, the Electric Parking Brake will apply. The brakes may also release under other conditions. Do not rely on Hill Start Assist to hold the vehicle.

Hill Start Assist is available when the vehicle is facing uphill in a forward gear, or when facing downhill in R (Reverse). The vehicle must come to a complete stop on a grade for Hill Start Assist to activate.

## Automatic Vehicle Hold (AVH)

**⚠ Warning**

Do not rely on this feature. It does not replace the need to pay attention and drive safely. You may not hear or feel alerts or warnings provided by this system. Failure to use proper care when driving may result in injury, death, or vehicle damage.

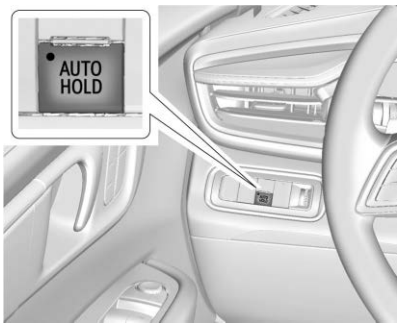


When Automatic Vehicle Hold (AVH) is turned on and the vehicle is braked to a stop, AVH prevents the vehicle from moving during the transition from brake pedal release to accelerator pedal apply. The brakes release when the accelerator pedal is applied. The brakes may also release under other conditions. Do not rely on AVH to hold the vehicle.

If the accelerator pedal is not applied within a few minutes, the Electric Parking Brake will apply. The parking brake will also apply if the driver door is opened or the driver seat belt is unfastened while AVH is holding the vehicle.

AVH can be turned on by pressing AUTO HOLD. The AVH indicator will come on. While AVH is holding the vehicle, the AVH indicator will change to green. See *Automatic Vehicle Hold (AVH) Light* ⇨ *105*.

# Ride Control Systems

## Traction Control/Electronic Stability Control

This vehicle has a Traction Control System and a StabiliTrak/Electronic Stability Control system. These systems help limit wheel spin and assist the driver in maintaining control, especially on slippery road conditions. Both systems turn on automatically when the vehicle is started and begins to move.

NOT FOR RESALE



The Traction Control System activates if any of the drive wheels are spinning and beginning to lose traction. If this happens, the traction system reduces power and applies the brakes to limit wheel spin.

The StabiliTrak/Electronic Stability Control system activates when the vehicle senses a difference between the intended path and the direction the vehicle is actually traveling. The stability control system selectively applies braking pressure to any one of the vehicle wheel brakes to assist the driver in keeping the vehicle on the intended path.

If cruise control is engaged and the traction or stability control system begins to limit wheel spin, cruise control will disengage. Cruise control may be turned back on when road conditions allow.

The systems may be heard or felt while they are operating or while performing diagnostic checks. This is normal and does not mean there is a problem with the vehicle.

It is recommended to leave both systems on for normal driving conditions, but it may be necessary to turn the Traction Control System off if the vehicle gets stuck in sand, mud, ice, or snow. See *If the Vehicle Is Stuck* ⇨ *171* and "Turning the Systems Off and On" later in this section.

If equipped, Trailer Sway Control turns on automatically when the vehicle is started. See *General Towing Information* ⇨ *247*.



The indicator light for both systems is in the instrument cluster. This light will:

- Flash when the Traction Control System is limiting wheel spin.
- Flash when the StabiliTrak/Electronic Stability Control system is activated.
- Turn on and stay on when either system is not working.

See *Traction Control System (TCS)/Electronic Stability Control Light* ⇨ *107*.

If either system fails to turn on or to activate, a message displays in the Driver Information Center. The vehicle is safe to drive, but adjust driving accordingly.

If turns on and stays on:

1. Stop the vehicle.
2. Turn the vehicle off and wait 15 seconds.
3. Start the vehicle.
4. Drive the vehicle.

If stays on, the vehicle may need more time to diagnose the problem. If the condition persists, see your dealer.

### Turning the Systems Off and On

| Caution |
| --- |
| Do not repeatedly brake or accelerate heavily when the Traction Control System is off. The vehicle driveline could be damaged. |

To turn the Traction Control System on and off, in the virtual controls app on the infotainment home screen, select Controls > See More Controls > Drive or Drive & Park. Select > next to the Traction Control menu. You will see options to turn off only the Traction Control System, to turn off both the Traction Control

NOT FOR RESALE



System and StabiliTrak/Electronic Stability Control (ESC) System, and to keep both systems on.

The Traction Off light displays in the instrument cluster when the Traction Control System is turned off. When the Traction Control System is turned back on, the Traction Off light displayed in the instrument cluster will turn off. See *Traction Off Light* ⇨ *106*.

If the traction system is actively limiting wheel spin when disabled, the system will not turn off until the wheels stop spinning.

The StabiliTrak/Electronic Stability Control Off light will display in the instrument cluster when the StabiliTrak/Electronic Stability Control (ESC) System is turned off. See *Electronic Stability Control (ESC) Off Light* ⇨ *107*.

The Traction Control System cannot be engaged when the StabiliTrak/Electronic Stability Control system is off.

The StabiliTrak/Electronic Stability Control system automatically engages if the vehicle exceeds 56 km/h (35 mph) and cannot be turned off again until speed is reduced. The Traction Control System will remain off.

Entering Teen Driver will automatically enable both the Traction Control System and StabiliTrak/Electronic Stability Control system and prevent these safety features from being turned off. See *Teen Driver* ⇨ *151*.

Adding accessories can affect the vehicle performance. See *Accessories and Modifications* ⇨ *250*.

## Driver Mode Control

Driver Mode Control allows the driver to adjust the overall driving experience to better suit driver preference by adjusting vehicle systems to fit specific driving needs. Drive mode availability and affected vehicle systems are dependent on vehicle trim level, region, and optional features.

Normal mode defaults at every ignition cycle. When a mode is selected, an indicator comes on in the instrument cluster and stays on.

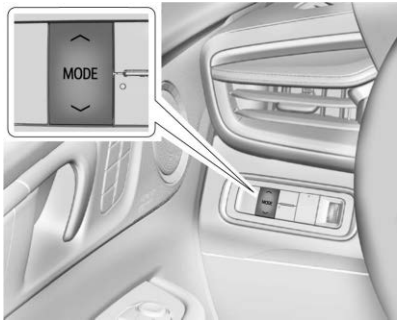


**Driver Mode Control Switch**

### Mode Activation

Press the mode switch to the left of the steering wheel on the instrument panel to make a mode selection.

### Mode Descriptions

**Normal Mode:** Use for normal city and highway driving to provide a smooth ride. This setting provides balance between comfort and handling.

**Sport Mode:** Use where road conditions or personal preference demand a more controlled response. Sport mode improves vehicle handling and acceleration on dry

NOT FOR RESALE



pavement. When active, Sport mode modifies steering efforts, pedal tuning, engine sound, if equipped.

**Snow/Ice Mode:** Use on snow covered roads to improve vehicle acceleration. When active, Snow/Ice mode adjusts pedal tuning to optimize traction on slippery surfaces. This can affect the acceleration on dry asphalt.

**Off-Road Mode:** Use for off-road recreational driving. Off-Road mode should be used to improve driving at moderate speeds, on grass, gravel, dirt, unpaved roads, or snow-covered roads. The accelerator pedal is tuned for off-road use. This mode modifies StabiliTrak/Electronic Stability Control, and Traction Control System performance. For more information on off-road driving, including important warnings and precautions, see *Off-Road Driving* ⇨ *168*.

**Tow/Haul Mode:** Use when hauling heavy loads to provide increased performance and vehicle control. Use this mode to assist in maintaining desired vehicle speeds when driving on downhill grades by using the engine and transmission. When active, Tow/Haul mode modifies transmission shifting, suspension tuning, steering effort, and Trailer Sway Control.

**Automatic Engine Grade Braking**

Automatic Engine Grade Braking assists when driving downhill. It maintains vehicle speed by automatically implementing a shift pattern that uses the engine and transmission to slow the vehicle. The system will automatically command downshifts to reduce vehicle speed. The normal shift pattern will return once the vehicle is on a low grade or when the accelerator pedal is pressed.

While in the Electronic Range Select mode, grade braking is deactivated, allowing the driver to select a range and limiting the highest gear available. Grade braking is available for normal driving and in Tow/Haul mode.




**All-Wheel Drive (AWD) Mode:** All-Wheel Drive (AWD) mode provides drive torque to all four wheels. Select this mode to improve traction and control on slippery road surfaces, such as gravel, sand, wet pavement, snow, and ice.

# Cruise Control

## Adaptive Cruise Control (Advanced)

If equipped, Adaptive Cruise Control allows the cruise control set speed and following gap to be selected. Read this entire section before using this system. The following gap is the following time between your vehicle and a vehicle detected directly ahead in your path, moving in the same direction. If no vehicle is detected in your path, Adaptive Cruise Control works like regular cruise control. Adaptive Cruise Control uses camera and radar sensors.

If a vehicle is detected in your path, Adaptive Cruise Control can speed up the vehicle or apply limited, moderate braking to maintain the selected following gap. To disengage Adaptive Cruise Control, apply the brake. If Adaptive Cruise Control is controlling your vehicle speed when the Stabilitrak/Electronic Stability Control system activates, Adaptive Cruise

NOT FOR RESALE



Control may automatically disengage. See *Traction Control/Electronic Stability Control* ⇨ *188*. When road conditions allow Adaptive Cruise Control to be safely used, Adaptive Cruise Control can be turned back on.

Disabling the Traction Control System or Stabilitrak/Electronic Stability Control system will disengage and prevent the engagement of Adaptive Cruise Control.

Adaptive Cruise Control can reduce the need for you to frequently brake and accelerate, especially when used on expressways, freeways, and interstate highways. When used on other roads, you may need to take over the control of braking or acceleration more often.

**⚠ Warning**

ACC has limited braking ability and may not have time to slow the vehicle down enough to avoid a collision with another vehicle you are following. This can occur when vehicles suddenly slow or stop ahead, or enter your lane. Also see "Alerting the Driver" in this section. Complete attention is always required while driving and you should be ready to take action and apply the brakes. See *Defensive Driving* ⇨ *166*.

**⚠ Warning**

ACC will not detect or brake for children, pedestrians, animals, or other objects.

Do not use ACC when:

- On winding and hilly roads or when the sensors are blocked by snow, ice, or dirt. The system may not detect a vehicle ahead. Keep the entire front of the vehicle clean.
- Visibility is poor due to rain, snow, fog, dirt, insect residue, or dust; when other foreign objects obscure the camera and/or radar; or when the vehicle in front or oncoming traffic causes additional environmental obstructions, such as road spray. ACC performance is limited under these conditions.
- On slippery roads where fast changes in tire traction can cause excessive wheel slip.
- Towing a trailer

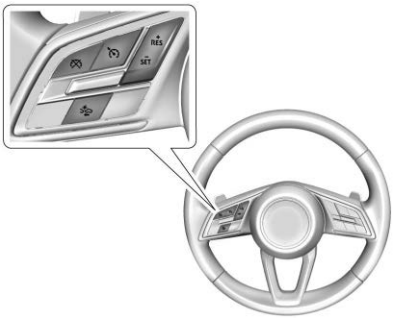


: Press to turn the system on or off. The indicator turns white on the instrument cluster when Adaptive Cruise Control is turned on.

+RES : Press briefly to resume the previous set speed or to increase vehicle speed if Adaptive Cruise Control is already activated. To increase speed by about 1 km/h (1 mph), press +RES to the first detent. To increase speed to the next 5 km/h (5 mph) mark on the speedometer, press +RES to the second detent.

–SET : Press briefly to set the speed and activate Adaptive Cruise Control or to decrease vehicle speed if Adaptive Cruise Control is already activated. To decrease speed by about 1 km/h (1 mph), press –SET to the first detent.

NOT FOR RESALE



To decrease speed to the next 5 km/h (5 mph) mark on the speedometer, press –SET to the second detent.

: Press to disengage Adaptive Cruise Control without erasing the selected set speed from memory.

: Press to select a following gap time (or distance) setting for Adaptive Cruise Control of Far, Medium, or Near.

The speedometer reading can be displayed in either English or metric units. The increment value used depends on the units displayed.

**Switching Between Adaptive Cruise Control and Regular Cruise Control**

To switch between Adaptive Cruise Control and regular cruise control, press and hold .
A Driver Information Center message displays.



**Adaptive Cruise Control Indicator**



**Regular Cruise Control Indicator**

When Adaptive Cruise Control is engaged, a green indicator is lit on the instrument cluster and the following gap is displayed. When the regular cruise control is engaged, a green indicator is lit on the instrument cluster; the following gap is not displayed.

It is recommended to switch from Adaptive Cruise Control to regular cruise control only, when there are no vehicles ahead of your vehicle.

When the vehicle is turned on, the cruise control mode will be set to the last mode used before the vehicle was turned off.

**⚠ Warning**

Always check the cruise control indicator on the instrument cluster to determine which mode cruise control is in before using the feature. If ACC is not active, the vehicle will not automatically brake for other vehicles, which could cause a crash if the brakes are not applied manually. You and others could be seriously injured or killed.

**Setting Adaptive Cruise Control**

If is on when not in use, –SET / +RES could be pressed and engage Adaptive Cruise Control when not desired. Keep off when Adaptive Cruise Control is not being used.

Select the set speed desired for Adaptive Cruise Control. This is the vehicle speed when no vehicle is detected in its path.

While the vehicle is moving, Adaptive Cruise Control will not set at a speed below a minimum speed, although it can be resumed. If equipped with Super Cruise, this minimum speed is 5 km/h (3 mph), otherwise, it is 25 km/h (15 mph). The minimum allowable set speed is 25 km/h (15 mph).

To set Adaptive Cruise Control while moving:

1. Press .
2. Accelerate to the desired speed.
3. Press and release –SET.
4. Remove your foot from the accelerator pedal.

After Adaptive Cruise Control is set, it may immediately apply the brakes if a vehicle ahead is detected closer than the selected following gap.

NOT FOR RESALE



Adaptive Cruise Control can also be set while the vehicle is stopped if Adaptive Cruise Control is on and the brake pedal is applied.

The Adaptive Cruise Control indicator displays on the instrument cluster and Head-Up Display, if equipped. When Adaptive Cruise Control is turned on, the indicator is lit white. When Adaptive Cruise Control is engaged, the indicator is lit green.

Be mindful of speed limits, surrounding traffic speeds, and weather conditions when selecting the set speed.

**Resuming a Set Speed**

If the Adaptive Cruise Control is set at a desired speed and then the brakes are applied or is pressed, the Adaptive Cruise Control is disengaged without erasing the set speed from memory.

To begin using Adaptive Cruise Control again, press +RES up briefly.

- If the vehicle is moving more than 5 km/h (3 mph), it returns to the previous set speed.
- If the vehicle is stopped with the brake pedal applied, press +RES and release the brake pedal. Adaptive Cruise Control will hold the vehicle until +RES or the accelerator pedal is pressed.

A green Adaptive Cruise Control indicator and the set speed display on the instrument cluster. The vehicle ahead indicator may be flashing if a vehicle ahead was present and moved. See “Approaching and Following a Vehicle” later in this section.

Once Adaptive Cruise Control has resumed, the vehicle speed will increase to the set speed under the following conditions:

- There is no vehicle ahead.
- The vehicle ahead is beyond the selected following gap.
- The vehicle speed is not being limited because of a sharp turn.

**Increasing Speed While Adaptive Cruise Control is at a Set Speed**

If Adaptive Cruise Control is already activated, do one of the following:

- Use the accelerator pedal to get to the higher speed. Briefly press and release –SET and release the accelerator pedal. The vehicle will now cruise at the higher speed. When the accelerator pedal is pressed, Adaptive Cruise Control will not brake because it is overridden. While overridden, the Adaptive Cruise Control indicator will turn blue on the instrument cluster and Head-Up Display, if equipped.
- Press and hold +RES until the desired set speed appears on the display, then release it.
- To increase vehicle speed in small increments, press +RES to the first detent. For each press, the vehicle goes 1 km/h or (1 mph) faster.
- To increase vehicle speed in larger increments, press +RES to the second detent. For each press, the vehicle speed increases to the next 5 km/h (5 mph) mark on the speedometer.

NOT FOR RESALE



The set speed can also be increased while the vehicle is stopped.

- If stopped with the brake applied, press +RES until the desired set speed is displayed.
- If Adaptive Cruise Control is holding the vehicle at a stop and there is another vehicle directly ahead, pressing +RES will increase the set speed.
- Pressing +RES when there is no longer a vehicle ahead or the vehicle ahead is pulling away and the brake is not applied will cause the Adaptive Cruise Control to resume.

When it is determined that there is no vehicle ahead, or the vehicle ahead is beyond the select following gap, then the vehicle speed will increase to the set speed.

**Reducing Speed While Adaptive Cruise Control is at a Set Speed**

If Adaptive Cruise Control is already activated, do one of the following:

- Use the brake pedal to get to the desired lower speed. Release the brake and press –SET. The vehicle will now cruise at the lower speed.
- Press and hold –SET until the desired lower speed is displayed, then release it.
- To decrease the vehicle speed in smaller increments, press –SET to the first detent. For each press, the vehicle goes 1 km/h (1 mph) slower.
- To decrease speed in larger increments, press –SET to the second detent. For each press, the vehicle speed decreases to the next 5 km/h (5 mph) mark on the speedometer.

The set speed can also be decreased while the vehicle is stopped. If stopped with the brake applied, press or hold –SET until the desired set speed is displayed.

**Selecting the Follow Distance Gap**

When a slower moving vehicle is detected ahead within the selected following gap, Adaptive Cruise Control will adjust the vehicle's speed and attempt to maintain the follow distance gap selected.

Press on the steering wheel to adjust the following gap. Each press cycles the gap button through three settings: Far, Medium, or Near.

When pressed, the current gap setting displays briefly on the instrument cluster or Head-Up Display, if equipped. Subsequent presses cycle the gap button through three settings: Far, Medium, or Near. The gap setting will be maintained until it is changed.

Since each gap setting corresponds to a following time (Far, Medium, or Near), the following distance will vary based on vehicle speed. The faster the vehicle speed, the further back your vehicle will follow a vehicle detected ahead. Consider traffic and weather conditions when selecting the following gap. The range of selectable gaps may not be appropriate for all drivers and driving conditions.

Changing the gap setting automatically changes the alert timing sensitivity (Far, Medium, or Near) for the Forward Collision Alert (FCA) feature. See *Forward Collision Alert (FCA) System* ⇨ *228*.

NOT FOR RESALE



**Alerting the Driver**

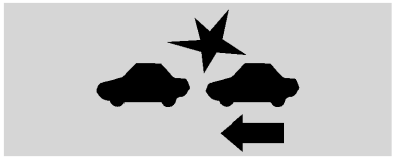

**With Head-Up Display**

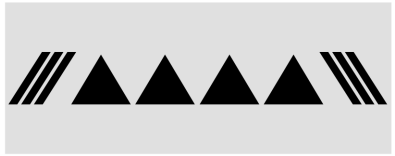

**Without Head-Up Display**

If Adaptive Cruise Control is engaged, driver action may be required when Adaptive Cruise Control cannot apply sufficient braking because of approaching a vehicle too rapidly.

When this condition occurs, the collision alert symbol will flash on the windshield. Either eight audible alerts will sound from the front, or both sides of the Safety Alert Seat will pulse five times. To view available settings from the infotainment screen, touch Settings > Vehicle > Collision/Detection Systems.

See *Defensive Driving* ⇨ *166*.

**Approaching and Following a Vehicle**



The vehicle ahead indicator is in the instrument cluster and Head-Up Display, if equipped. It only displays when a vehicle is detected in your vehicle's path moving in the same direction. If this symbol is not displaying, Adaptive Cruise Control will not respond to or brake for vehicles ahead.

Adaptive Cruise Control automatically slows the vehicle down and adjusts vehicle speed to follow a detected vehicle ahead at the selected follow gap. The vehicle speed increases or decreases to follow a detected vehicle in front of your vehicle when that vehicle is traveling slower than your vehicle set speed. It may apply limited braking, if necessary. When braking is active, the brake lights will come on. The automatic braking may feel or sound different than if the brakes were applied manually. This is normal.

**Passing a Vehicle While Using Adaptive Cruise Control**

If the set speed is high enough, and the left turn signal is used to pass a vehicle ahead in the selected following gap, Adaptive Cruise Control may assist by gradually accelerating the vehicle prior to the lane change.

**⚠ Warning**

When using ACC to pass a vehicle or perform a lane change, the following distance to the vehicle being passed may be reduced. ACC may not apply sufficient acceleration or braking when passing a vehicle or performing a lane change. Always be ready to manually accelerate or brake to complete the pass or lane change.

NOT FOR RESALE



**Stationary or Very Slow-Moving Objects**

**⚠ Warning**

ACC may not detect and react to stopped or slow-moving vehicles ahead of you. For example, the system may not brake for a vehicle it has never detected moving. This can occur in stop-and-go traffic or when a vehicle suddenly appears due to a vehicle ahead changing lanes. Your vehicle may not stop and could cause a crash. Use caution when using ACC. Your complete attention is always required while driving and you should be ready to take action and apply the brakes.

**Irregular Objects Affecting Adaptive Cruise Control**

Adaptive Cruise Control may have difficulty detecting the following objects:

- Vehicles with cargo extending from the back end.
- Non-standard shaped vehicles, such as vehicle transport, vehicles with a side car fitted, or horse carriages.
- Objects that are close to the front of your vehicle.

**Adaptive Cruise Control Automatically Disengages**

Adaptive Cruise Control may automatically disengage and the driver will need to manually apply the brakes to slow the vehicle when:

- The sensors are blocked.
- The Traction Control System or Stabilitrak/ Electronic Stability Control has activated or been disabled.
- There is a fault in the system.
- The radar falsely reports blockage when driving in a desert or remote area with no other vehicles or roadside objects. A Driver Information Center message may display to indicate that Adaptive Cruise Control is temporarily unavailable.
- A Driver Information Center message may display to indicate that Adaptive Cruise Control is temporarily unavailable.

The Adaptive Cruise Control active symbol will turn white when Adaptive Cruise Control is no longer active.

In some cases, when Adaptive Cruise Control will not activate, regular cruise control may be used. See “Switching Between Adaptive Cruise Control and Regular Cruise Control” previously in this section. Always consider driving conditions before using either cruise control system.

**Notification to Resume Adaptive Cruise Control**

Adaptive Cruise Control will maintain a following gap behind a detected vehicle and slow your vehicle to a stop behind that vehicle.

If the stopped vehicle ahead has driven away and Adaptive Cruise Control has not resumed, the vehicle ahead indicator will flash as a reminder to check traffic ahead before proceeding. In addition, the left and right sides of the Safety Alert Seat will pulse three times, or three audible alerts will sound. To view available settings from the infotainment screen, touch Settings > Vehicle > Collision/ Detection Systems, then select “Alert Type” or “Adaptive Cruise Go Notifier.”

When the vehicle ahead drives away, Adaptive Cruise Control resumes automatically if the stop was brief. If necessary, press +RES or the accelerator pedal to resume Adaptive Cruise Control. If stopped for more than two minutes

NOT FOR RESALE



or if the driver door is opened and the driver seat belt is unbuckled, Adaptive Cruise Control automatically applies the Electric Parking Brake (EPB) to hold the vehicle. The Electric Parking Brake light will turn on. See *Electric Parking Brake* ⇨ *186*. To release the EPB, press the accelerator pedal.

A Driver Information Center warning message may display indicating to shift to P (Park) before exiting the vehicle.

**⚠ Warning**

If ACC has stopped the vehicle, and if ACC is disengaged, turned off, or canceled, the vehicle will no longer be held at a stop. The vehicle can move. When ACC is holding the vehicle at a stop, always be prepared to manually apply the brakes.

**⚠ Warning**

Leaving the vehicle without placing it in P (Park) can be dangerous. Do not leave the vehicle while it is being held at a stop by

(Continued)

**Warning (Continued)**

ACC. Always place the vehicle in P (Park) and turn off the ignition before leaving the vehicle.

**Adaptive Cruise Control Override**

If using the accelerator pedal while Adaptive Cruise Control is active, the Adaptive Cruise Control indicator turns blue on the instrument cluster indicating Adaptive Cruise Control braking will not occur. Adaptive Cruise Control will resume operation when the accelerator pedal is not being pressed.

**⚠ Warning**

The ACC will not automatically apply the brakes if your foot is resting on the accelerator pedal. You could crash into a vehicle ahead of you.

**Curves in the Road**

**⚠ Warning**

On curves, ACC may not detect a vehicle ahead in your lane. You could be startled if the vehicle accelerates up to the set speed, especially when following a vehicle exiting or entering exit ramps. You could lose control of the vehicle or crash. Do not use ACC while driving on an entrance or exit ramp. Always be ready to use the brakes if necessary.

**⚠ Warning**

On curves, ACC may respond to a vehicle in another lane, or may not have time to react to a vehicle in your lane. You could crash into a vehicle ahead of you, or lose control of your vehicle. Give extra attention in curves and be ready to use the brakes if necessary. Select an appropriate speed while driving in curves.

Adaptive Cruise Control may operate differently in a sharp curve. It may reduce the vehicle speed if the curve is too sharp.

NOT FOR RESALE



If equipped, the curve speed control indicator may illuminate green when Adaptive Cruise Control is actively controlling the vehicle speed and detects a sharp curve on the road ahead.

Adaptive Cruise Control automatically slows the vehicle down while navigating the curve and may increase speed out of the curve, but will not exceed the set speed.

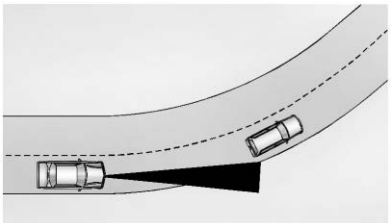

When following a vehicle and entering a curve, Adaptive Cruise Control may not detect the vehicle ahead and accelerate to the set speed. When this happens, the vehicle ahead indicator will not appear.

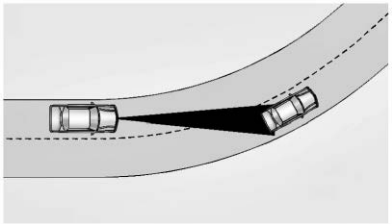

Adaptive Cruise Control may detect a vehicle that is not in your lane and apply the brakes.

Adaptive Cruise Control may occasionally provide an alert and/or braking that is considered unnecessary. It could respond to vehicles in different lanes, signs, guardrails, and other stationary objects when entering or exiting a curve. This is normal operation. The vehicle does not need service.

**Other Vehicle Lane Changes**

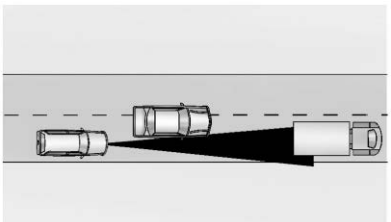

Adaptive Cruise Control will not detect a vehicle ahead until it is completely in the lane. The brakes may need to be manually applied.

**Objects Not Directly in Front of Your Vehicle**

The detection of objects in front of the vehicle may not be possible if:

- The vehicle or object ahead is not within your lane.
- The vehicle ahead is shifted, not centered, or is shifted to one side of the lane.

**Driving in Narrow Lanes**

Vehicles in adjacent traffic lanes or roadside objects may be incorrectly detected when located along the roadway.

**Do Not Use Adaptive Cruise Control on Hills**

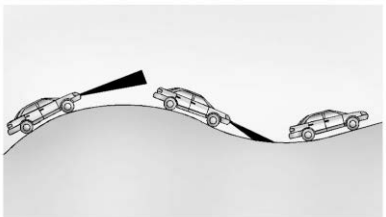

NOT FOR RESALE



Do not use Adaptive Cruise Control when driving on steep hills as Adaptive Cruise Control may not detect a vehicle ahead.

**Do Not Use Adaptive Cruise Control When Towing a Trailer**

Adaptive Cruise Control should not be used when towing a trailer.

**Disengaging Adaptive Cruise Control**

There are three ways to disengage Adaptive Cruise Control:

- Step lightly on the brake pedal.
- Press .
- Press .

**Erasing Speed Memory**

The cruise control set speed is erased from memory if is pressed or when the vehicle is turned off.

**Auto Set Speed**

**Warning**

When using Auto Set Speed with ACC, the auto set speed may not always be updated when the speed limit changes. The system also does not set the vehicle speed to speed limits shown with supplementary traffic signs, for example in construction zones. Always be attentive to your surroundings and adhere to posted speed limit signs.

If equipped, the Auto Set Speed function uses detected road speed limits to assist setting the vehicle speed while ACC is engaged.

You can enable or disable this feature through vehicle settings. To view available settings from the infotainment screen, touch Settings > Vehicle > Speed Assist.

When ACC is engaged and Auto Set Speed is enabled, the vehicle will:

- use the road speed limit to maintain a set vehicle speed.
- change the ACC set speed to match the new road speed limit.

Increase or decrease ACC set speed at any time using the SET– or RES+ buttons, to a predefined limit. The accelerator pedal can also be used to override the set speed.

If you change ACC set speed, it will reset to the road speed limit under the following conditions:

- You pass a new road speed limit.
- ACC set speed is higher than the road speed limit, and the vehicle speed goes to or below the road speed limit.
- The accelerator pedal is used to increase the speed above road speed limit and then the pedal is released.

This function will not work when regular Cruise Control is the selected Cruise Control mode.

This function may not work for conditional speed limit signs, for example, during specific times or where workers present.

**Weather Conditions Affecting Adaptive Cruise Control**

System operation may be limited under snow, heavy rain, or road spray conditions.

NOT FOR RESALE



**Accessory Installations and Vehicle Modifications**

Do not install or place any object around the front camera windshield area that would obstruct the front camera view.

Do not install objects on top of the vehicle that overhang and obstruct the front camera, such as a canoe, kayak, or other items that can be transported on a roof rack system. See *Roof Rack System* ⇨ *88*.

Do not modify the hood, headlights, or fog lights, as this may limit the camera's ability to detect an object.

**Cleaning the Sensing System**

The camera sensor on the windshield behind the rearview mirror can become blocked by snow, ice, dirt, mud, or debris. This area needs to be cleaned for Adaptive Cruise Control to operate properly.

The vehicle headlights may need to be cleaned due to dirt, snow, or ice. Objects that are not illuminated correctly may be difficult to detect.

If Adaptive Cruise Control will not operate, regular cruise control may be available. See "Switching Between Adaptive Cruise Control and Regular Cruise Control" previously in this section. Always consider driving conditions before using either cruise control system.

For cleaning instructions, see "Washing the Vehicle" under *Exterior Care* ⇨ *311*.

## Super Cruise

If equipped, Super Cruise can steer to maintain lane position under certain conditions on Super Cruise-enabled roads.

Super Cruise can also steer to perform a lane change under certain conditions on Super Cruise-enabled roads. A lane change can be initiated by the driver using the turn signal lever.

If equipped with Automatic Lane Change, the Super Cruise system may initiate a lane change maneuver in following scenarios:

- To pass slower traffic
- When the current lane is ending ahead
- To return to the initial lane
- To provide space for vehicles merging from an ending lane

See "Super Cruise Lane Change" later in this section and *Turn and Lane-Change Signals* ⇨ *124*.

**⚠ Warning**

Super Cruise can only assist to maintain lane position when driving on compatible highways. You must supervise the driving task and monitor the freeway conditions. You may need to respond to traffic events by steering, braking, or accelerating. See *Defensive Driving* ⇨ *166*.

Super Cruise is:

- Not a self-driving system.
- Not a crash avoidance or warning system.
- Not a substitute for proper supervision of the driving task.

Super Cruise uses the following to detect the current lane position and lane markings ahead on compatible highways under certain conditions:

- Cameras
- Global Positioning System (GPS) sensing

NOT FOR RESALE



- A high-precision map
- GPS-enhancement data downloaded through OnStar

Super Cruise works with Adaptive Cruise Control, which controls acceleration and braking while Super Cruise is enabled and operating. Carefully review and understand this "Super Cruise" section and the "Adaptive Cruise Control" section before using Super Cruise. See *Adaptive Cruise Control (Advanced)* ⇨ *191*.

An active Connected Service plan that includes Super Cruise Services is required to use Super Cruise.

**⚠ Warning**

Super Cruise does not perform all aspects of driving, nor does it do everything a driver can do. Super Cruise only steers to maintain vehicle position in the current lane or, under some circumstances, to change lanes. Super Cruise can only be used with Adaptive Cruise Control.

Super Cruise does:

(Continued)

**Warning (Continued)**

- Not prevent crashes or warn of possible crashes.
- Not steer to avoid stopped or slow-moving vehicles, cross-traffic, construction barriers or cones, motorcycles, children, pedestrians, animals, or other objects on the road.
- Not steer in response to vehicles or objects next to your vehicle, including vehicles attempting to enter your lane.
- Not respond to traffic lights, stop signs, or other traffic control devices.
- Not respond to crossing traffic.
- Not make turns.
- Not steer to merge onto or to exit highways.
- Not steer to avoid, or steer through construction zones.
- Not function on surface streets.
- Not respond to oncoming traffic.
- Not function in city driving conditions.

**⚠ Warning**

Some state and local laws may require hands to be kept on the steering wheel at all times. Only remove your hands from the steering wheel if Super Cruise is engaged, it is safe to do so, and it is permitted by state and local laws.

**⚠ Warning**

Failure to supervise the driving task and to respond appropriately, even while Super Cruise is operating, can cause a crash. Super Cruise may not respond as you would to all driving situations and may not maintain lane position under all conditions.

It is extremely important to pay attention to the operation of the vehicle, even while using Super Cruise. Do not use a hand-held device while driving, even with Super Cruise engaged. To prevent serious injury or death:

- Always remain properly seated in the driver seat with your seat belt fastened.

(Continued)

NOT FOR RESALE



**Warning (Continued)**

- Never remove your hands from the steering wheel when Super Cruise is not operating.
- Always make sure traffic conditions are safe before using Super Cruise.
- Always keep the entire vehicle and the sensors clean. Sensors are on the front, sides, and rear of the vehicle.
- Always observe posted speed limits. Only use Super Cruise at or below the posted speed limit.

Super Cruise should not be used in complex or uncertain driving conditions, including:

- Not in construction zones.
- Not when approaching or exiting toll plazas.
- Not when approaching an intersection that is controlled with a traffic light, stop sign, or other traffic control device.

(Continued)

**Warning (Continued)**

- Not when lane markings are not present or cannot be detected. For example, there is too much glare, weather conditions are poor, or lanes are poorly marked.
- Not on slippery or icy roads.
- Not in adverse weather conditions, including rain, sleet, fog, ice, or snow.
- Not on winding or hilly roads.
- Not for city driving.
- Not during heavy or emergency braking.
- Not on surface streets.
- Not on a road shoulder, service drive, or under an elevated freeway.
- Not when towing a trailer that does not meet GM approved guidelines.
- Not in a highway exit lane.

**When Super Cruise is Available**



**Super Cruise Indicator**

Super Cruise is designed to operate only when:

- Adaptive Cruise Control is on. See *Adaptive Cruise Control (Advanced)* ⇨ *191*.
- Teen Driver is not active.
- The GPS detects the vehicle is on a Super Cruise-enabled road.
- Both the camera and the radar sensors are functioning and not covered, obstructed, or damaged.
- The Driver Attention System detects the driver's head and eyes are directed toward the road.
- The lane markings are clearly visible and able to be detected by the system.

Super Cruise may be unavailable if the system detects that the outside air temperature is very cold.

NOT FOR RESALE





Poor Conditions



Poor Conditions

**Using Super Cruise**

**Warning**

Super Cruise may not begin steering immediately, even when Super Cruise is available and has been pressed. To prevent serious injury or death, only remove your hands from the steering wheel if the steering wheel light bar, the Super Cruise light, and the Adaptive Cruise Control light are green.



To engage Super Cruise:

1. Press to turn on Adaptive Cruise Control. Make sure the white Adaptive Cruise Control indicator light displays in the instrument cluster. See *Adaptive Cruise Control (Advanced)* ⇨ *191*. When Super Cruise is available, the Super Cruise indicator light is lit white on the instrument cluster.
2. Press .

   Adaptive Cruise Control will set the speed at the current vehicle speed. If Adaptive Cruise Control has a previously set speed, it may resume at that speed.

When engaged and not steering the vehicle, the steering wheel light bar flashes blue and the Super Cruise indicator light is lit blue. The driver is in control of steering and Super Cruise is not steering the vehicle.

When the vehicle is positioned in the center of the lane, the steering wheel light bar and the Super Cruise indicator light is lit green, indicating Super Cruise is steering the vehicle.

When Super Cruise controls the steering, traffic and other conditions and laws permit, and it is safe to do so, your hands can be taken off the steering wheel.

NOT FOR RESALE



Always pay attention to the road and the operation of the vehicle. Always monitor and be attentive of surrounding traffic, including vehicles that may cross the road in front of your vehicle.

Super Cruise steering can be overridden with manual steering at any time. When Super Cruise is engaged, always be prepared to take immediate action — including steering, accelerating, and braking quickly, if necessary.

Super Cruise, when engaged, will enable Forward Collision System to Alert and Brake.

### Steering Manually and Changing Lanes

The vehicle can always be manually steered, even with Super Cruise engaged; for example, when changing lanes.

When the steering wheel is moved manually, the steering wheel light bar pulses blue and the Super Cruise indicator light on the instrument cluster turns blue to indicate that Super Cruise is not steering the vehicle.

When ready to allow Super Cruise to resume steering again, position the vehicle in the center of the lane, hold the steering wheel until the steering wheel light bar turns green, and then release the steering wheel when it is safe to do so.

**⚠ Warning**

To help prevent crashes before making a lane change:

- Always check mirrors.
- Glance over your shoulder.
- Use the turn signals.

### Super Cruise Lane Change

#### On Demand Lane Changes

Super Cruise can steer to perform a single lane change under certain conditions when requested by the driver activating a turn signal or automatic initiated by the Super Cruise system.

To request a lane change:

1. Verify the lane next to your vehicle is clear and conditions are safe to make a lane change.
2. Use the turn signal lever to activate the turn signal in the direction of the desired lane change.
3. Return the turn signal lever to the neutral position after the lane change. See *Turn and Lane-Change Signals* ⇨ *124*.

To cancel a lane change, return the turn signal lever to the neutral position, move the lever in the opposite direction of the lane change, or steer manually at any time.

#### Automatic Lane Changes

If equipped with Automatic Lane Change, and if the automatic lane change setting is enabled, the Super Cruise system may initiate a single lane change under the following conditions:

- To the left to pass a slower moving vehicle ahead and then a subsequent lane change to the right to return to your original lane.
- To the left or the right lane when the current lane is ending ahead.
- To the left or the right lane when a slower moving vehicle is detected in the adjacent ending lane to provide space for the merging vehicle.
- To follow a route set on the built-in navigation system.

To cancel a Super Cruise lane change, move the turn signal lever or steer manually at any time.

NOT FOR RESALE



If Super Cruise detects that traffic is clear, Super Cruise will steer the vehicle to perform the lane change. A message appears on the Driver Information Center during the lane change to provide more information on the status of the lane change.

Super Cruise Lane Change functionality is only available on Super Cruise-compatible divided roads.

Super Cruise Automatic Lane Change functionality is not available when a construction zone is detected.

Super Cruise Lane Change may be disabled when a trailer or other accessories (e.g., a bike rack, cargo tray, etc.) are detected.

Do not use Super Cruise Lane Change when towing a trailer.

The Super Cruise Lane Change feature can be customized to be Off, Turn Signal Activated, or Automatic through vehicle settings. To view the available settings, from the infotainment home screen, touch Settings > Vehicle > Super Cruise Lane Change.

**⚠ Warning**

Super Cruise Lane Change may not detect a vehicle in an adjacent lane. Always supervise the driving task and monitor traffic conditions when using the Super Cruise Lane Change feature. Only request a lane change when traffic conditions are safe for a lane change, and always be ready to manually steer the vehicle. See "Steering Manually and Changing Lanes" listed previously in this section.

**Take Over Alert**

**⚠ Warning**

Super Cruise will not maintain the vehicle's speed while the steering wheel lightbar is flashing red. If the steering wheel lightbar flashes red, immediately resume manual steering to prevent serious injury or death. If you do not resume manual steering, the vehicle will begin to slow in the same lane and eventually come to a complete stop on the road.

Any time the steering wheel light bar flashes red, resume manual steering immediately.

To begin steering manually, hold the steering wheel firmly (with both hands) using the highlighted regions as shown in the picture below.



The Super Cruise indicator light is lit red in the instrument cluster and a message will display in the Driver Information Center. In addition, beeps will sound, or the Safety Alert Seat will vibrate, if equipped. To view available settings from the infotainment home screen, touch Settings > Vehicle > Collision/Detection Systems. After you begin steering manually, then Super Cruise will disengage.

NOT FOR RESALE



The red flashing steering wheel light bar could occur under any of the following conditions:

- Lane markings are poor or visibility is limited.
- The Driver Attention System does not detect that the driver's head and eyes are directed toward the road.
- Adaptive Cruise Control was canceled.
- The vehicle is on a tight curve, or the lanes are too wide, or the vehicle goes into a curve too fast.
- The road speed limit of the Super Cruise-compatible, non-divided road is below 72 km/h (45 mph).
- The Super Cruise-compatible road ends.
- The vehicle is approaching an intersection controlled by a traffic light, stop sign, or other traffic control device.
- A Super Cruise system fault occurs.
- Super Cruise is unable to complete the lane change maneuver.
- Super Cruise detects that the outside air temperature is very cold.

**Attention to the Road**

**⚠ Warning**

Super Cruise is a driver assistance system and cannot accurately detect or predict all situations. Super Cruise is not a crash avoidance system. To prevent serious injury or death, you must supervise the driving task and monitor the road conditions. You may need to respond to traffic events by steering, braking, or accelerating. See *Defensive Driving* ⇨ *166*. Super Cruise also cannot determine whether you are awake, asleep, impaired, or properly focused on safe driving. The vehicle could crash into other vehicles, drive out of the lane, or drive off the road. Complete attention is always required while driving, even while using Super Cruise. Be prepared to take over steering or apply the brakes at any time.

**⚠ Warning**

To prevent serious injury or death, be alert and pay special attention when passing highway exits, entrances, and crossings with Super Cruise, and be ready to take control of the vehicle when necessary. Changes in lane markings around exits and entrances can momentarily cause Super Cruise to not detect the correct lane. If this occurs, Super Cruise may attempt steering inputs to bring the vehicle back into the correct lane and, in rare circumstances, could over-correct and cause the vehicle to momentarily cross into a lane next to your vehicle unless you manually steer to maintain your lane position.

The Driver Attention System on the steering column continually monitors driver head and eye position to estimate driver attention to the road. The camera does not record or share pictures, audio, or video.

Sunglasses, hats, or other types of clothing that change the shape of the head may interfere with camera performance. To improve camera performance, raise or lower the steering wheel, or change the seat position.

NOT FOR RESALE



Pay close attention to the road ahead to avoid these three increasing alerts:

| | |
|---|---|
| First Alert | • If the steering wheel light bar flashes green, the system has detected that your head and eyes may not be directed toward the road.<br>• The flashing will stop when the system detects that your head and eyes appear to be directed toward the road. |
| Second Alert | • If the steering wheel light bar flashes green for too long, Super Cruise will alert the driver to take control of steering immediately by flashing the light bar red. Also, either beeps will sound or the Safety Alert Seat will vibrate, if equipped. To view available settings from the infotainment home screen, touch Settings > Vehicle > Collision/Detection Systems.<br>• Take over steering, then Super Cruise may disengage or the steering wheel light bar will flash blue to indicate driver override. Do not take your hands off of the steering wheel until the steering wheel light bar is green.<br>• To re-engage Super Cruise after disengagement, press on the steering wheel. See “Using Super Cruise” previously in this section. |
| Third Alert | • If the steering wheel light bar flashes red for too long, a voice command will instruct you to take control of the vehicle.<br>• Take control of the steering immediately; Adaptive Cruise Control and Super Cruise will disengage.<br>• A Driver Information Center message will indicate that Super Cruise is locked out. Super Cruise cannot be re-engaged until the vehicle is turned off and back on.<br>• Continued failure to take over steering will cause the vehicle to brake to a stop and OnStar will be called. The brake lights and hazard warning flashers will come on.<br>• Take control of the vehicle and continue driving. |

NOT FOR RESALE



**Stationary or Very Slow-Moving Objects; Cross-Traffic**

**⚠ Warning**

Super Cruise is not a crash avoidance system and will not steer or brake to avoid a crash. Super Cruise does not steer to prevent a crash with stopped or slow-moving vehicles. You must supervise the driving task and may need to steer and brake to prevent a crash, especially in stop-and-go traffic or when a vehicle suddenly enters your lane. Always pay attention when using Super Cruise. Failure to do so could result in a crash involving serious injury or death.

**Curves in the Road**

**⚠ Warning**

The vehicle could drift out of your lane of travel. To prevent crashes, always be ready to manually steer. Super Cruise may not detect your lane on curves in the road. Super Cruise may not detect the markings

(Continued)

**Warning (Continued)**

that show your lane. You may not have time to react to a vehicle in the lane next to your vehicle while on curves in the road. Super Cruise may hand control back to the driver more often driving around a sharp curve while towing a trailer.

Super Cruise may operate differently in sharp curves. It may drift out of your lane of travel if the curve is too sharp.

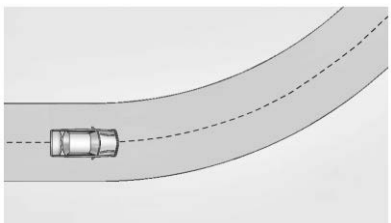

When entering a curve, Super Cruise may not detect the lane markings and may not adjust the steering enough to stay in your lane of travel. When this happens, you will need to steer the vehicle.

Super Cruise may detect other lane markings that are not in your lane and may or may not steer appropriately to maintain your lane.

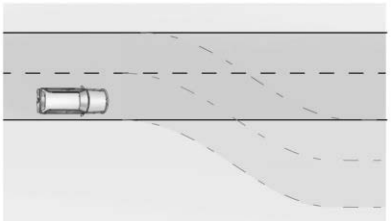

Super Cruise may occasionally provide an alert and/or steering that is considered unnecessary. It could respond to lane markings in different lanes, signs, guardrails, and other stationary objects when entering or exiting a curve. This is normal operation. The vehicle does not need service.

NOT FOR RESALE



### Other Vehicles Entering Your Lane

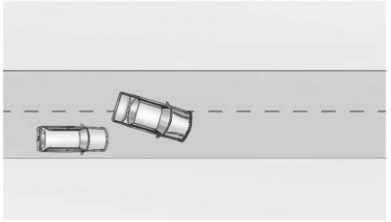

Super Cruise may not detect a vehicle that enters your lane, or may not brake fast enough to avoid a crash. You must manually brake and steer the vehicle.

### Intersections; Vehicles Crossing the Road Ahead

Super Cruise will not brake the vehicle when approaching an intersection that is controlled by a traffic light or stop sign. Super Cruise will not detect vehicles crossing the road ahead, including at intersections, and will not automatically steer or brake to prevent a collision. You must manually brake and steer the vehicle.

### Towing a Trailer

Super Cruise may be used when towing a trailer when the attached trailer is within size and weight limits designated in the Trailer Towing section. See *General Towing Information* ⇨ *247*.

When Super Cruise is used with vehicles equipped with aftermarket trailer brake controller, disengage Super Cruise before applying the manual trailer brake. Super Cruise will not automatically disengage when the manual trailer brake is applied.

Do not use Super Cruise Lane Change when towing a trailer.

For additional information on towing a trailer, see *General Towing Information* ⇨ *247*.

### Super Cruise on Hills

Do not use Super Cruise while driving on steep hills.

### Super Cruise on Non-Divided Roads

Super Cruise may be available on non-divided roads that are mapped, outside of urbanized areas, and have a road speed limit above 72 km/h (45 mph).

### Super Cruise Indicator Light Summary



NOT FOR RESALE



The steering wheel light bar and instrument cluster light provide the following important information about Super Cruise operation:

| Steering Wheel Light Bar | Instrument Cluster Light | Super Cruise Description |
|---|---|---|
| Off | Off | Super Cruise is off. There is no automatic steering. Operate the vehicle manually. |
| Off | White | Super Cruise is available and can be engaged. |
| Solid Green | Solid Green | Super Cruise is steering. Pay attention to the road and vehicle operation. |
| Flashing Blue | Solid Blue | Super Cruise is not steering. Operate the vehicle manually. See “Steering Manually and Changing Lanes” previously in this section. |
| Flashing Green | Solid Green | Super Cruise has detected you are not paying sufficiently close attention to the road. Pay attention to the road. See “Attention to the Road” previously in this section. |
| Flashing Red | Solid Red | Take over steering immediately. Super Cruise will disengage. See “Take Over Alert” previously in this section. |

**Disengaging Super Cruise**

There are two ways to disengage Super Cruise:

- Press while your hands are on the steering wheel. Super Cruise steering will disengage.
- Press the brake pedal while your hands are on the steering wheel. Both Super Cruise steering and Adaptive Cruise Control will disengage.

**Super Cruise Messages**

If the Super Cruise indicator light does not appear, press on the steering wheel to display a Driver Information Center message as to why the system is unavailable.

NOT FOR RESALE



If Super Cruise disengages, pressing within 10 seconds of the disengagement will display a Driver Information Center message with the reason for Super Cruise disengagement.

## Super Cruise Message Summary

| Super Cruise Message | Super Cruise Message Summary |
|---|---|
| Subscription Required - Press OnStar Button | • The owner's required Connected Services subscription may have ended.<br>• Press the Blue OnStar button in your vehicle to speak with an OnStar representative, who can help determine the issue and what actions to take |
| Unavailable Turn on Adaptive Cruise Control | Adaptive Cruise Control must be on before Super Cruise can be enabled.<br>• A set speed is not required before enabling Super Cruise.<br>• Adaptive Cruise Control does not need to be engaged (activated) before enabling Super Cruise. |
| Unavailable Road Ending | Super Cruise is disabled because the driving lane is ending. |
| Unavailable No Road Information | • There is no map information available for that portion of a controlled access road. Recent road reconstruction may turn off Super Cruise for that section of road until new map information is available.<br>• The vehicle is not on the correct type of road. A controlled access freeway or a compatible divided or non-divided road is required to use Super Cruise.<br>• There are lanes entering or exiting on both the left and right side of the road. |

NOT FOR RESALE



| Super Cruise Message | Super Cruise Message Summary |
|---|---|
| Unavailable Sensors Can't Find Lane Lines | • Rain or snow is inhibiting the system's ability to detect lane lines.<br>• Direct sunlight is on the front camera at dawn or dusk.<br>• There are missing or poor lane line markings on the road.<br>• There is sun glare on the road surface.<br>• There is heavy rain, puddles, or road spray. |
| Unavailable Sensor Can't See Face Clearly | • Sun is shining into the Driver Attention System camera.<br>• Dawn or dusk sun glare is on the driver's face.<br>• Cups, food, hands, or other objects are obscuring the Driver Attention System camera's view of the driver's face.<br>• The steering column is pointed too high or low for the Driver Attention System to detect the driver. Adjust the steering column or the seat if the message occurs frequently. |
| Unavailable Looking Away From Road for Too Long | The Driver Attention System detects that the driver is not looking at the road. |
| Unavailable Driving Too Fast | The vehicle is traveling faster than 137 km/h (85 mph).<br>The maximum Super Cruise speed in curves will vary based on how sharp the curve is. The vehicle will automatically decrease speed if needed. |
| Unavailable Driving in Exit Lane | The Super Cruise system has detected that the vehicle is in an exit lane. |

NOT FOR RESALE



| Super Cruise Message | Super Cruise Message Summary |
|---|---|
| Unavailable GPS Signal Lost | • There may be poor GPS reception (e.g., in isolated areas).<br>• The GPS reception may be blocked by objects such as tall buildings or large structures. |
| Unavailable You Have Taken Vehicle Control | • The brake pedal is being pressed.<br>• Adaptive Cruise Control has been canceled or turned off. |
| Unavailable Sensor Blocked | Clear snow, ice, dirt, or other contaminants from the front and rear areas of the vehicle. |
| Unavailable Over Weight Limit | Super Cruise has detected that the trailer is over the allowable weight limit. |
| Unavailable Trailer Too Unstable | Super Cruise has detected that the attached trailer is causing an unstable driving condition. Check the trailer and/or the load. |
| Unavailable Trailer Too Large | The trailer size (length/width) is larger than is supported for Super Cruise operation. |
| Unavailable Lane Too Narrow | Super Cruise has detected that the lane width ahead is too narrow for Super Cruise operation while towing a trailer. |
| Unavailable Sharp Curve | Some curves are too sharp to be navigated by the Super Cruise system. Super Cruise will be available after the curve has been traveled. |
| Super Cruise Unavailable | Super Cruise is unavailable for reasons not described in other messages. |
| Super Cruise Locked Out See Owner's Manual | The driver did not take control of the vehicle when prompted by the Super Cruise system. The Super Cruise system will be disabled until the ignition is turned off and back on. |
| Unavailable Seat Belt Not Fastened | The driver seat belt is not fastened. |

NOT FOR RESALE



| Super Cruise Message | Super Cruise Message Summary |
|---|---|
| Unavailable Teen Driver Mode Active | Teen Driver mode is active. |
| Unavailable Snow Mode | A snow plow is attached. |
| Unavailable Unsupported Intersection | Super Cruise has detected an unsupported intersection. |
| Unavailable Approaching Toll Booth | Super Cruise has detected that there is a toll booth ahead. |
| Unavailable Ride Height Out of Range | The vehicle ride height is out of Super Cruise operational range. |
| Caution Construction Zone – Drive With Care | Super Cruise has detected a construction zone. |

**Map Updates**

Super Cruise relies on precise LIDAR based maps, these are often called High Definition (HD) Maps. These HD Maps are regularly updated by GM and sent to your vehicle. This will happen automatically as your vehicle is driven. This will not require any user input. If there is any issue with these HD Map updates, a Service Driver Assist error message will be displayed. If this message is displayed, please contact an authorized GM Service Center.

**Data Download**

If the vehicle is equipped with OnStar and has an active service plan, additional data may be collected through the OnStar system. This includes information about: the vehicle's operation; a crash involving the vehicle; the use of the vehicle and its features; and, in certain situations, the location and approximate GPS speed of the vehicle. Refer to the OnStar Terms and Conditions and Privacy Statement on the OnStar website.

**Location Services**

This setting enables or disables sharing of vehicle location outside the vehicle for certain purposes. Even if the Location Services setting

NOT FOR RESALE



is disabled, vehicle location information will continue to be shared for emergency services and Super Cruise, if equipped.

**System Care**

The camera on the steering column has a lens cover that may become dirty over time and affect camera performance. Clean the lens cover with a soft cloth sprayed with glass cleaner. Wipe the lens gently, then dry it. Never use abrasive cloths/cleaners or corrosive chemicals of any kind on the lens cover.

Super Cruise uses the front radar, front camera, and 360 degree cameras for its operation. Clean surfaces are required for Super Cruise operation. See *Adaptive Cruise Control (Advanced)* ⇨ *191*, "Surround Vision Camera" under *Advanced Driver Assistance Systems* ⇨ *216*, and *Lane Keep Assist (LKA)* ⇨ *241* for care information.

**Caution**

The Super Cruise system is a highly sophisticated system and should only be serviced by technicians with the proper

(Continued)

**Caution (Continued)**

training, tools, and safety instructions, which your dealer has. Without proper training and tools the vehicle may become damaged.

## Advanced Driver Assistance Systems

This vehicle may have features that work together to help avoid crashes or reduce crash damage while driving, backing, and parking. Read this entire section before using these systems.

**⚠ Warning**

Do not rely on the Driver Assistance Systems. These systems do not replace the need for paying attention and driving safely. You may not hear or feel alerts or warnings provided by these systems. Failure to use proper care when driving may result in injury, death, or vehicle damage. See *Defensive Driving* ⇨ *166*.

(Continued)

**Warning (Continued)**

Under many conditions, these systems will not:

- Detect children, pedestrians, bicyclists, or animals.
- Detect vehicles or objects outside the area monitored by the system.
- Work at all driving speeds.
- Warn you or provide you with enough time to avoid a crash.
- Work under poor visibility or bad weather conditions.
- Work if the detection sensor is not cleaned or is covered by ice, snow, mud, or dirt.
- Work if the detection sensor is covered up, such as with a sticker, magnet, or metal plate.
- Work if the area surrounding the detection sensor is damaged or not properly repaired.

(Continued)

NOT FOR RESALE



**Warning (Continued)**

Complete attention is always required while driving, and you should be ready to take action and apply the brakes and/or steer the vehicle to avoid crashes.

**Audible or Safety Alert Seat**

Some driver assistance features alert the driver of obstacles by sounding an audible alert. To view available settings for this feature, touch the Settings icon on the infotainment home page. Select "Vehicle" to display the list of available options and select "Comfort and Convenience".

If equipped with the Safety Alert Seat, the driver seat cushion may provide a vibrating pulse alert instead of an audible alert. To view available settings for this feature, touch the Settings icon on the infotainment home page. Select "Vehicle" to display the list of available options and select "Collision/ Detection Systems".

**Cleaning**

Depending on vehicle options, keep these areas of the vehicle clean to ensure the best driver assistance feature performance. Driver Information Center messages may display when the systems are unavailable or blocked.





- Front and rear bumpers and the area below the bumpers
- Front grille and headlights
- Front camera lens in the front grille or near the front emblem
- Front side and rear side panels
- Outside of the windshield in front of the rearview mirror
- Side camera lens on the bottom of the outside mirrors
- Rear side corner bumpers
- Rear Vision Camera above the license plate

NOT FOR RESALE



## Assistance Systems for Parking or Backing

If equipped, the Rear Vision Camera, Surround Vision, Rear Park Assist, Automatic Parking Assist, and Rear Cross Traffic Alert may help the driver park or avoid objects. Always check around the vehicle when parking or backing.

## Rear Vision Camera (RVC)

**⚠ Warning**

The camera(s) do not display children, pedestrians, bicyclists, crossing traffic, animals, or any other object outside of the cameras' field of view, below the bumper, or under the vehicle. Shown distances may be different from actual distances. Do not drive or park the vehicle using only these camera(s). Always check behind and around the vehicle before driving. Failure to use proper care may result in injury, death, or vehicle damage.

When the vehicle is shifted into R (Reverse), the Rear Vision Camera displays an image of the area behind the vehicle in the infotainment display. The previous screen displays when the vehicle is shifted out of R (Reverse) after a short delay. To return to the previous screen sooner, press Home or Back on the infotainment system, shift into P (Park), or reach a vehicle speed of approximately 12 km/h (8 mph) while in D (Drive).

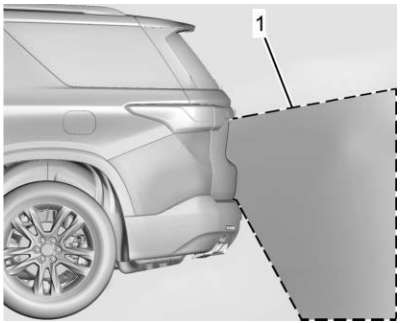


1. View Displayed by the Camera

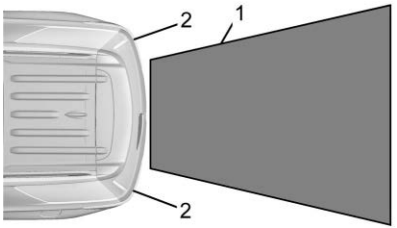


1. View Displayed by the Camera
2. Corners of the Rear Bumper

Displayed images may be farther or closer than they appear. The area displayed is limited and objects that are close to either corner of the bumper or under the bumper do not display.

A warning triangle may appear on the infotainment display to show that Rear Park Assist or Rear Cross Traffic Alert has detected an object. This triangle changes from amber to red and increases in size the closer the object.

NOT FOR RESALE



## Surround Vision System

**Warning**

The Surround Vision cameras have blind spots and will not display all objects near the corners of the vehicle. Folding outside mirrors that are out of position may not display surround view correctly. Always check around the vehicle when parking or backing.

**Warning**

The camera(s) do not display children, pedestrians, bicyclists, crossing traffic, animals, or any other object outside of the cameras' field of view, below the bumper, or under the vehicle. Shown distances may be different from actual distances. Do not drive or park the vehicle using only these camera(s). Always check behind and around the vehicle before driving. Failure to use proper care may result in injury, death, or vehicle damage.

If equipped, Surround Vision shows an image of the area surrounding the vehicle, along with the front or rear camera views on the infotainment display. The front camera is in the grille or near the front emblem, the side cameras are on the bottom of the outside mirrors, and the rear camera is above the license plate.

The Surround Vision system can be accessed by selecting CAMERA in the infotainment display or when the vehicle is shifted into R (Reverse). To return to the previous screen sooner, when not in R (Reverse) press Home or Back on the infotainment system or shift into P (Park).




1. Views Displayed by the Surround Vision Cameras
2. Area Not Shown

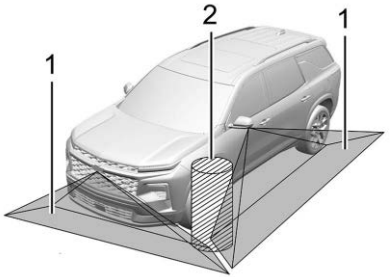


1. Views Displayed by the Surround Vision Cameras
2. Area Not Shown

**Camera Views**

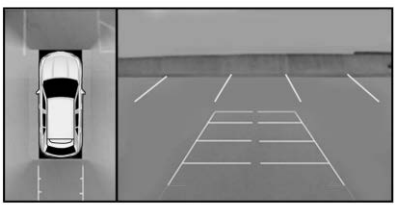

NOT FOR RESALE



**Front/Rear Standard View:** Displays an image of the area in front or behind the vehicle. Touch Front/Rear Standard View on the infotainment display when a camera view is active. Touching the button multiple times will toggle between front and rear camera views.

If equipped, the front view camera also displays when the Park Assist system detects an object within 30 cm (12 in).

**Front/Rear Overhead View:** Displays a Front or Rear Overhead View of the vehicle. Touching the button will toggle between the two views.

**Side Forward/Rearward View:** Displays a view that shows objects next to the front or rear sides of the vehicle. Touch Side Forward/Rearward View on the infotainment display when a camera view is active. Touching the button multiple times will toggle between forward and rearward views. Park Assist and Rear Cross Traffic Alert overlays are not available when Side Forward/Rearward View is active.

**Hitch View:** Assists while connecting to a trailer. Displays a zoomed-in view of the hitch to help align the vehicle's hitch ball with the trailer coupler. Shifting into P (Park) while in this view will automatically engage the Electric Parking Brake.

**Guidance Lines:** Displays available guidelines. The horizontal markings represent distance from the vehicle.

**Top Down View:** Displays an image of the area surrounding the vehicle, along with other views in the infotainment display. Top Down can be enabled or disabled by touching the Top Down View button multiple times.

**Cabin Glance:** If equipped, displays a live feed of the seating area on the infotainment screen. This view is used to monitor the occupants of the vehicle without needing to turn around. The video is real-time only and is not recorded or stored.

**Hitch Guidance**

**⚠ Warning**

Use Hitch Guidance only to help back the vehicle to a trailer hitch or, when traveling above 12 km/h (8 mph), to briefly check the status of your trailer. Do not use for any other purpose, such as making lane change decisions. Before making a lane change, always check the mirrors and glance over your shoulder. Improper use could result in serious injury to you or others.

If equipped, this feature displays a single, centered guideline on the camera display to assist with aligning a vehicle's hitch ball with a trailer coupler. Select the trailer guidance line button, then align the trailer guidance line over the trailer coupler. Continuously steer the vehicle to keep the guidance line centered on the coupler when backing. Rear Vision Camera Park Assist overlays will not display when the trailer guidance line is active. Hitch Guidance is only available in Standard View.

To check the trailer when in a forward gear above 12 km/h (8 mph), touch CAMERA on the infotainment display to view the rear camera. Touch X to exit the view or it will be removed automatically after eight seconds.

## Park Assist

**⚠ Warning**

The Park Assist System is no substitute for careful and attentive driving. The Park Assist system does not detect children, pedestrians, bicyclists, animals, or objects located below the bumper or that are too

(Continued)

NOT FOR RESALE



**Warning (Continued)**

close or too far from the vehicle. It is not available at speeds greater than 9 km/h (6 mph). To prevent injury, death, or vehicle damage, even with Park Assist, always check the area around the vehicle and check all mirrors before moving forward or backing.

The vehicle may be equipped with Rear Park Assist or Front and Rear Park Assist. Under certain conditions, the Park Assist system can assist the driver during backing and parking maneuvers when the vehicle is driven at no more than 9 km/h (6 mph). An illuminated indicator in the Park Assist button indicates the system is ready.

Sensors located in the bumpers measure the distance between the vehicle and objects using sonar technology.

Different environmental conditions may affect whether and how far the Park Assist system can detect objects. Keep the sensors clean of mud, dirt, snow, ice, and slush; and clean sensors after a car wash in freezing temperatures. Sensors that are not clean may not detect objects or may cause the system to alert when not required.

### How the System Works

The vehicle may have a Park Assist amphitheatre-like display on the cluster with bars that represent the estimated location of a detected object and the vehicle's distance from the object. As a detected object becomes closer, more bars light up and change color from yellow to amber to red. Vehicles equipped with Rear Park Assist will show the amphitheater at the rear of the vehicle, and if equipped, Front and Rear Park Assist will show the amphitheater at the front and rear.

Audible alerts sound to warn the driver of certain objects that are detected around the vehicle. The frequency of audible alerts increases as the vehicle gets closer to the object. When the object is very close to the vehicle, the audible alerts are continuous. The audible alerts may be muted by pressing the on screen mute button.

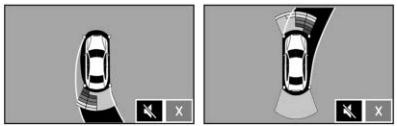

### Turning the System On and Off

To view available settings from the infotainment home screen, touch Settings > Vehicle > Collision/Detection Systems.

If equipped, the vehicle will have an option to indicate if a towbar is attached. If the menu is available and a trailer hitch is attached, select ON - ATTACHED using the infotainment system to allow Park Assist to function properly. Park Assist is then able to compensate for a trailer hitch up to 0.3 m (1 ft) in length and width. Park Assist may not function properly with larger trailer hitches and provide inaccurate information of objects in the rear.

Turn off Park Assist when towing a trailer to prevent unwanted audible alerts and when a bike rack is attached to ensure proper operation.

NOT FOR RESALE



**When the System Does Not Seem to Work Properly**

If a service message displays, check the following conditions:

- The sensors may not be clean. Keep the vehicle's front and rear bumpers free of mud, dirt, snow, ice, and slush. For cleaning instructions, see *Exterior Care* ⇨ *311*.
- The Park Assist sensors may be covered by frost or ice. Frost or ice can form around and behind the sensors and may not always be seen; this can occur after washing the vehicle in cold weather. The message may not clear until the frost or ice has melted.

If a service message displays and the above conditions do not exist, take the vehicle to your dealer for repairs.

If the Park Assist System does not activate due to a temporary condition, a system off message is shown on the display. This can occur under the following conditions:

- The driver has disabled the system.
- An object is currently blocking the rear sensors (for example, bike rack, tailgate, trailer hitch, etc.). Once the object is removed, Park Assist will return to normal operation.
- The bumper is damaged. Take the vehicle to your dealer for repairs.
- Other conditions, such as vibrations from a jackhammer or the compression of air brakes on a very large truck, are affecting system performance.

## Automatic Parking Assist (APA)

### Automatic Parking Assist

**⚠ Warning**

APA may not always detect objects in the parking space, objects that are not rigid (e.g. shrubs and chain-link fences), objects below the bumper, objects high off the ground (e.g. flatbed trucks), hanging objects, objects below ground level (e.g. large potholes), or moving objects (e.g. pedestrians, cyclists, vehicles). Always verify that the parking space is appropriate

(Continued)

**Warning (Continued)**

for parking a vehicle. APA may not respond to changes in the parking space, such as movement of an adjacent vehicle, or a person or object entering the parking space. APA does not detect or avoid traffic that is behind or alongside of the vehicle. Always be prepared to stop the vehicle during the parking maneuver.

If equipped, under certain conditions Automatic Parking Assist can use sensors to detect a parking spot, and, under the supervision of the driver, automatically park or unpark the vehicle. The vehicle will control gear selection, steering, acceleration, and braking, at or near idle speeds. The driver must always be prepared to apply braking, as needed. A display and audible alerts help to guide the parking maneuvers.

**How to Activate Automatic Parking**

To activate Automatic Parking Assist, press P AUTO on the infotainment screen, or P AUTO on the instrument panel. While driving forward at no greater than 30 km/h (18 mph), Automatic Parking Assist searches for parking spots,

NOT FOR RESALE



within the detection range, to the left or right of the vehicle. To search for a parking space to the left, turn on the left turn signal or, if available, change the side selection in the infotainment display. To choose or change the parking mode, make a selection on the infotainment display.

The Automatic Parking Assist feature cannot be used in all empty parking spots. The parking spot must:

- Be sufficiently large to fit the vehicle comfortably.
- Have an adjacent vehicle, wall, or pillar for the system to align to.
- Not be too steep.

After completely passing an eligible parking spot, an audible alert sounds and a notification to stop the vehicle is displayed in the driver information center. Generally, Automatic Parking Assist selects the nearest empty parking spot behind the vehicle, but under some conditions may select a space that is further back. Slow down and bring the vehicle to a complete stop to begin.

Follow the displayed instructions. When the vehicle is ready to begin the maneuver, the steering wheel will vibrate briefly as a reminder to remove hands from the steering wheel. After the vibration stops, check your surroundings and release the brakes to begin automatic parking. As the vehicle maneuvers into the parking spot, continue to check your surroundings. Be prepared to stop to avoid vehicles, pedestrians, or objects.

A progress bar displays the status of the parking maneuver. Once automatic parking is finished and the vehicle has come to a full stop, Automatic Parking Assist will sound an audible alert and display a message indicating parking is complete.

### How to Activate Automatic Unparking

To activate Automatic Parking Assist, turn the vehicle on and leave it in P (Park), then press P AUTO on the infotainment screen or the P AUTO button on the instrument panel. A screen will display with unparking options. Like automatic parking, follow the displayed instructions and continue to check your surroundings, being prepared to brake to avoid vehicles, pedestrians, or objects.

Once automatic unparking is finished and the vehicle has come to a full stop, Automatic Parking Assist will display a message requesting the driver to take control. Press the brakes and take control of the vehicle to drive away.

### How to Cancel Automatic Parking/Unparking

To cancel automatic parking or automatic unparking at any time, press P AUTO or X on the infotainment display. Be prepared to resume full control of the vehicle. Automatic Parking Assist holds the vehicle until the parking brake or brake is applied, or the vehicle is shifted into P (Park). To start driving away, press the brakes and shift into D (Drive).

Certain vehicle conditions and driver interferences may also cancel automatic parking:

- The driver manually steers the vehicle.
- The driver shifts gears.
- The driver presses the accelerator pedal.
- There is a failure with the Automatic Parking Assist system.
- The electronic stability control or antilock brakes are activated.
- The parking brake is applied.
- The driver unbuckles the seat belt and opens the door.

NOT FOR RESALE



**System Limitations**

Automatic Parking Assist has certain limitations. The system cannot:

- Detect whether a parking space is legal or restricted.
- Detect pavement markings or lines.
- Park in an angled spot.
- Park exactly centered in a very large spot.
- Park in a very narrow spot.
- Always detect short curbs.
- Operate while towing any trailer.
- Operate with certain rear-mounted accessories, such as bike racks.
- Operate on a steep grade.
- Park the vehicle front first.

## Reverse Automatic Braking (RAB)

### Backing Warning and Reverse Automatic Braking

**⚠ Warning**

The Backing Warning System only operates at speeds greater than 8 km/h (5 mph). It does not detect children, pedestrians, bicyclists, animals, or objects below the bumper or that are too close or too far from the vehicle. In some situations, such as at higher backing speeds, there may not be enough time for the short, sharp application of the vehicle brake system to occur. To prevent injury, death, or vehicle damage, even with the Backing Warning System, always check the area around the vehicle and check all mirrors before backing.

**⚠ Warning**

RAB may not avoid many types of backing crashes. Do not wait for the automatic braking to apply. This system is not designed to replace driver braking and only works in R (Reverse) when an object is detected directly behind the vehicle. It may not brake or stop in time to avoid a crash. It will not brake for objects when the vehicle is moving at very low speeds. It does not detect children, pedestrians, bicyclists, animals, or objects below the bumper or that are too close or too far from the vehicle. To prevent injury, death, or vehicle damage, even with RAB, always check the area around the vehicle before and while backing.

**⚠ Warning**

There may be instances where unexpected or undesired automatic braking occurs. If this happens, either press the brake pedal or firmly press the accelerator pedal to release the brakes from the RAB system. Before

(Continued)

NOT FOR RESALE



**Warning (Continued)**

releasing the brakes, check the RVC and check the area around the vehicle to make sure it is safe to proceed.

If equipped and enabled, when in R (Reverse), Backing Warning alerts of rear objects at vehicle speeds greater than 8 km/h (5 mph). Reverse Automatic Braking may automatically brake hard at speeds between 1–32 km/h (0.5–20 mph).

The Backing Warning System will sound one audible alert from the rear when an object is first detected, or pulse twice on both sides of the Safety Alert Seat. When the system detects a potential crash, audible alerts will be heard from the rear, or five pulses will be felt on both sides of the Safety Alert Seat. There may also be a brief, sharp application of the brakes.

When the vehicle is in R (Reverse), if the system detects the vehicle is backing too fast to avoid a crash with a detected object behind your vehicle in your path, it may automatically brake hard to a stop to help avoid or reduce the harm caused by a backing crash.

Pressing the brake pedal after the vehicle comes to a stop will release Reverse Automatic Braking. If the brake pedal is not pressed soon after the stop, the electric parking brake may be set. When it is safe, press the accelerator pedal firmly at any time to override Reverse Automatic Braking.

Unexpected braking events are possible with a static installed accessory, such as a bike rack or hitch-mounted cargo carrier.

#### Turning the Features On or Off

Reverse Automatic Braking can be turned on or off using the infotainment system. To view available settings from the infotainment home screen, touch Settings > Vehicle > Collision/ Detection Systems.

## Rear Pedestrian Alert

**⚠ Warning**

Rear Pedestrian Alert does not automatically brake the vehicle. It also does not provide an alert unless it detects a pedestrian, and it may not detect all pedestrians if:

(Continued)

**Warning (Continued)**

- The pedestrian is not directly behind the vehicle, fully visible to the Rear Vision Camera (RVC), or standing upright.
- The pedestrian is part of a group.
- The pedestrian is a child.
- Visibility is poor, including nighttime conditions, fog, rain, or snow.
- The RVC is blocked by dirt, snow, or ice.
- The RVC, taillights, or back-up lights are not cleaned or in proper working condition.
- The vehicle is not in R (Reverse).

To help avoid death or injury, always check for pedestrians around the vehicle before backing up. Be ready to take action and apply the brakes. See *Defensive Driving* ➪ *166*. Keep the RVC, taillights, and back-up lights clean and in good repair.

If equipped, and under certain conditions, this feature can provide alerts for a pedestrian within the system's range directly behind the vehicle. This feature only works in R

NOT FOR RESALE



(Reverse) below 12 km/h (8 mph), and detects pedestrians up to 8 m (26 ft) away during daytime driving. During nighttime driving, feature performance is very limited.



**Rear Pedestrian Alert Indicator**

When a pedestrian is detected within the system's range directly behind the vehicle, this symbol flashes amber on the infotainment display, along with five audible alerts from the rear, or if equipped, two pulses from both sides of the driver seat. When a pedestrian is detected close to the vehicle, the symbol flashes red on the infotainment display, along with ten audible alerts from the rear, or if equipped, seven pulses from both sides of the driver seat.

Rear Pedestrian Alert can be set to Off or Alert. To view available settings from the infotainment screen, touch Settings > Vehicle > Collision/Detection Systems.

If equipped, alerts can be set to audible alerts or seat pulses. To view available settings from the infotainment screen, touch Settings > Vehicle > Collision/Detection Systems > Alert Type.

## Rear Cross Traffic Alert (RCTA) System

**⚠ Warning**

Rear Cross Traffic Alert is an assistance feature only. It does not replace safe, attentive driving. To prevent property damage, injury, or death, always check your surroundings and use your mirrors before backing up. Do not rely solely on Rear Cross Traffic Alert to warn of potential collisions. Rear Cross Traffic Alert only operates while the vehicle is in R (Reverse) in a limited speed range. Rear Cross Traffic Alert may not:

- Detect all vehicles, pedestrians, bicyclists, animals, or objects too close or too far from the vehicle.

(Continued)

**Warning (Continued)**

- Detect an object if it is partially blocked by an adjacent vehicle or other objects.
- Detect an object when weather limits visibility, such as in fog, rain, or snow.
- Operate when the sensors in the left or right corners of the rear bumper are covered with mud, dirt, snow, slush, ice, etc.
- Operate when a trailer or rear-mounted accessory, such as a bike rack or hitch-mounted cargo carrier, are attached to the vehicle.

If equipped, Rear Cross Traffic Alert displays a red warning triangle with a left or right pointing arrow on the infotainment display to warn of traffic coming from the left or right. When an object is detected, either three audible alerts sound from the left or right, or three Safety Alert Seat pulses occur on the left or right side, depending on the direction of the detected vehicle.

NOT FOR RESALE



Use caution while backing up when towing a trailer, as the Rear Cross Traffic Alert detection zones that extend out from the back of the vehicle do not move farther back when a trailer is attached to the vehicle.

**Rear Cross Traffic Braking (RCTB)**

**⚠ Warning**

Rear Cross Traffic Braking is an assistance feature only. It does not replace safe, attentive driving. To prevent property damage, injury, or death, always check your surroundings and use your mirrors before backing up. Do not rely solely on Rear Cross Traffic Braking to prevent collisions.

Rear Cross Traffic Braking only operates while the vehicle is in R (Reverse) in a limited speed range.

Rear Cross Traffic Braking may not:

- Detect all vehicles, pedestrians, bicyclists, animals, or objects too close or too far from the vehicle.

(Continued)

**Warning (Continued)**

- Detect an object if it is partially blocked by an adjacent vehicle or other objects.
- Detect an object when weather limits visibility, such as in fog, rain, or snow.
- Operate when the sensors in the left or right corners of the rear bumper are covered with mud, dirt, snow, slush, ice, etc.
- Operate when a trailer or rear-mounted accessory, such as a bike rack or hitch-mounted cargo carrier, are attached to the vehicle.

Rear Cross Traffic Braking may automatically brake the vehicle suddenly in situations where it is unexpected and undesired. It could respond to guardrails, signs, heavy rain or snow and other non-moving objects. To override Rear Cross Traffic Braking, firmly press the accelerator pedal, if it is safe to do so.

If equipped and enabled, under certain conditions, RCTB may detect objects approaching from the left or right side of the rear of the vehicle. When an approaching object is detected, RCTB displays a red warning triangle with a left- or right-pointing arrow on the infotainment display, and either three audible alerts sound from the, or three pulses occur of the Safety Alert Seat in the direction of the detected object.

RCTB may apply the brake to bring the vehicle to a stop if a collision is imminent. Once stopped, the system may engage the Electric Parking Brake (EPB) to hold the vehicle. Release the EPB or press the accelerator pedal to continue driving, if it is safe to do so.

**Driving With a Trailer**

It is recommended to turn RCTA and RCTB off through the settings menu while a trailer is attached. In some vehicles, attaching a trailer will automatically deactivate these features.

**Turning the Features On or Off**

Rear Cross Traffic Alert and Rear Cross Traffic Braking can be turned on or off using the infotainment system. To view available settings from the infotainment app screen, touch Settings > Vehicle > Collision/ Detection Systems.

NOT FOR RESALE



## Assistance Systems for Driving

If equipped, when driving the vehicle in a forward gear, Forward Collision Alert, Front Pedestrian Braking, Lane Keep Assist, Side Blind Zone Alert, Lane Change Alert, and/or Automatic Emergency Braking can help to avoid a crash or reduce crash damage.

## Forward Collision Alert (FCA) System

**⚠ Warning**

Forward Collision Alert is a warning system and does not apply the brakes. When approaching a slower-moving or stopped vehicle ahead too rapidly, or when following a vehicle too closely, Forward Collision Alert may not provide a warning with enough time to help avoid a crash. It also may not provide any warning at all. Forward Collision Alert does not warn of pedestrians, animals, signs, guardrails, bridges, construction barrels, or other objects. Be ready to take action and apply the brakes. See *Defensive Driving* ⇨ *166*.

The Forward Collision Alert system may help to avoid or reduce the harm caused by front-end crashes. When approaching a vehicle ahead too quickly, it provides a red flashing alert on the windshield and rapid audible alerts or pulses the driver seat. Forward Collision Alert also lights an amber visual alert if following another vehicle much too closely.

Forward Collision Alert detects vehicles within a distance of approximately 60 m (197 ft) and operates at speeds above 8 km/h (5 mph). If the vehicle has Adaptive Cruise Control, it can detect vehicles to distances of approximately 110 m (360 ft) and operates at all speeds. See *Adaptive Cruise Control (Advanced)* ⇨ *191*.

Forward Collision Alert can be disabled through vehicle settings. To view available settings from the infotainment home screen, touch Settings > Vehicle > Collision/ Detection Systems.

### Detecting the Vehicle Ahead

**⚠ Warning**

FCA does not provide a warning to help avoid a crash, unless it detects a vehicle. FCA may not detect a vehicle ahead if the FCA sensor is blocked by dirt, snow, or ice, or if the windshield is damaged. It may also not detect a vehicle on winding or hilly roads, or in conditions that can limit visibility such as fog, rain, or snow, or if the headlights or windshield are not cleaned or in proper condition. Keep the windshield, headlights, and FCA sensors clean and in good repair.



Forward Collision Alert warnings will not occur unless the system detects a vehicle ahead. When a vehicle is detected, the vehicle ahead indicator will display green. Vehicles may not be detected on curves, highway exit ramps, or hills, due to poor visibility; or if a vehicle ahead

NOT FOR RESALE



is partially blocked by pedestrians or other objects. Forward Collision Alert will not detect another vehicle ahead until it is completely in the driving lane.

**Collision Alert**

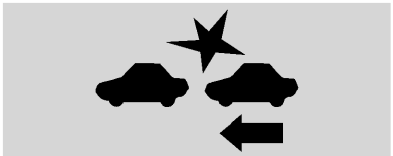

**With Head-Up Display**



**Without Head-Up Display**

When your vehicle approaches another detected vehicle too rapidly, the red Forward Collision Alert display will flash on the windshield. Also, eight rapid high-pitched audible alerts will sound from the front, or both sides of the Safety Alert Seat will pulse five times. When this Collision Alert occurs, the brake system may prepare for driver braking to occur more rapidly which can cause a brief, mild deceleration. Continue to apply the brake pedal as needed.

**Tailgating Alert**



The vehicle ahead indicator will display amber when you are following a vehicle ahead much too closely.

## Selecting the Alert Timing



The Collision Alert control is on the steering wheel. Press to set the Forward Collision Alert timing to Far, Medium, or Near. The first button press shows the current setting on the Driver Information Center. Additional button presses will change this setting. The chosen setting will remain until it is changed and will affect the timing of both the Collision Alert and the Tailgating Alert features. The timing of both alerts will vary based on vehicle speed. The faster the vehicle speed, the farther away the alert will occur. Consider traffic and weather conditions when selecting the alert timing. The range of selectable alert timings may not be appropriate for all drivers and driving conditions.

If your vehicle is equipped with Adaptive Cruise Control, changing the Forward Collision Alert timing setting automatically changes the following gap setting (Far, Medium, or Near).

## Following Distance Indicator

If equipped, the following distance to a moving vehicle ahead in your path is indicated in following time in seconds on the Driver Information Center. See *Driver Information Center (DIC)* ⇨ *111*. The minimum following time is 0.5 seconds away. If there is no vehicle detected ahead, or the vehicle ahead is out of sensor range, dashes will be displayed.

NOT FOR RESALE



### Unnecessary Alerts

Forward Collision Alert may provide unnecessary alerts for turning vehicles, vehicles in other lanes, objects that are not vehicles, or shadows. These alerts are normal operation and the vehicle does not need service.

### Cleaning the System

If the Forward Collision Alert system does not seem to operate properly, this may correct the issue:

- Clean the outside of the windshield in front of the rearview mirror.
- Clean the entire front of the vehicle.
- Clean the headlights.

## Automatic Emergency Braking (AEB)

**⚠ Warning**

AEB is an emergency crash preparation feature and is not designed to avoid crashes. Do not rely on AEB to brake the

(Continued)

**Warning (Continued)**

vehicle. AEB will not brake outside of its operating speed range and only responds to detected vehicles.

AEB may not:

- Detect a vehicle ahead on winding or hilly roads.
- Detect all vehicles, especially vehicles with a trailer, tractors, muddy vehicles, etc.
- Detect a vehicle when weather limits visibility, such as in fog, rain, or snow.
- Detect a vehicle ahead if it is partially blocked by pedestrians or other objects.

Complete attention is always required while driving, and you should be ready to take action and apply the brakes and/or steer the vehicle to avoid crashes.

**⚠ Warning**

AEB may automatically brake the vehicle suddenly in situations where it is unexpected and undesired. It could respond to a turning vehicle ahead, guardrails, signs, and other non-moving objects. To override AEB, firmly press the accelerator pedal, if it is safe to do so.

If equipped, the Automatic Emergency Braking system may help avoid or reduce the harm caused by front-end crashes. Automatic Emergency Braking also includes Intelligent Brake Assist. When the system detects a vehicle in the path ahead that is traveling in the same direction, and that you may crash into, it can provide a boost to braking, or automatically brake the vehicle. This can help avoid or lessen the severity of crashes when driving in a forward gear. Depending on the situation, the vehicle may automatically brake moderately or hard. This Automatic Emergency Braking can only occur if a vehicle is detected. Vehicle detection is shown by the Forward Collision Alert vehicle ahead indicator being lit. See *Forward Collision Alert (FCA) System* ⇨ *228*.

NOT FOR RESALE



The system works when driving in a forward gear between 8 km/h (5 mph) and 80 km/h (50 mph), or on vehicles with Adaptive Cruise Control, above 4 km/h (2 mph). It can detect vehicles up to approximately 60 m (197 ft).

Automatic Emergency Braking may slow the vehicle to a complete stop to try to avoid a potential crash. If this happens, Automatic Emergency Braking may engage the electric parking brake to hold the vehicle at a stop. Release the electric parking brake or firmly press the accelerator pedal.

### Intelligent Brake Assist

**⚠ Warning**

IBA may increase vehicle braking in situations when it may not be necessary. You could block the flow of traffic. If this occurs, take your foot off the brake pedal and then apply the brakes as needed.

**⚠ Warning**

Using AEB or IBA while towing a trailer could cause you to lose control of the vehicle and crash. Turn the system to Alert or Off when towing a trailer.

Intelligent Brake Assist may activate when the brake pedal is applied quickly by providing a boost to braking based on the speed of approach and distance to a vehicle ahead.

Minor brake pedal pulsations or pedal movement during this time is normal and the brake pedal should continue to be applied as needed. Intelligent Brake Assist will automatically disengage only when the brake pedal is released.

Automatic Emergency Braking and Intelligent Brake Assist can be disabled through vehicle settings. To view available settings from the infotainment screen, touch Settings > Vehicle > Collision/Detection Systems.

A system unavailable message may display if:

- The front of the vehicle or windshield is not clean.
- Heavy rain or snow is interfering with object detection.
- There is a problem with the StabiliTrak/ Electronic Stability Control system.

The Automatic Emergency Braking system does not need service.

### Intersection Automatic Emergency Braking System

**⚠ Warning**

I-AEB is an emergency crash preparation feature. Do not rely on I-AEB to brake or avoid crashes. I-AEB will not brake outside of its operating speed range and only responds to detected intersecting vehicles. I-AEB may not:

- detect a crossing or oncoming vehicle on winding or hilly roads.
- detect all vehicles, especially vehicles with a trailer, tractors, muddy vehicles, etc.
- detect a vehicle when weather limits visibility, such as in fog, rain, or snow.
- detect a vehicle ahead if it is partially blocked by pedestrians or other objects.

(Continued)

NOT FOR RESALE



**Warning (Continued)**

Complete attention is always required while driving, and you should be ready to take action and apply the brakes and/or steer the vehicle to avoid crashes.

If equipped, the Intersection Automatic Emergency Braking system may help avoid or reduce the harm caused by front-end crashes with crossing vehicles, or when performing a left-hand turn.

The system works when driving in a forward gear above 15 km/h (9 mph) and less than 80 km/h (50 mph). It can detect oncoming vehicles up to approximately 60 m (197 ft).

**Vehicle Crossing the Path Ahead**

When there is a crossing vehicle detected approaching from the right or the left side that may lead to a collision, Intersection Automatic Emergency Braking provides a red flashing alert on the windshield and rapid audible alerts or pulses the Safety Alert Seat. See *Advanced Driver Assistance Systems* ⇨ *216*. Intersection Automatic Emergency Braking can provide a boost to braking or automatically brake the vehicle.

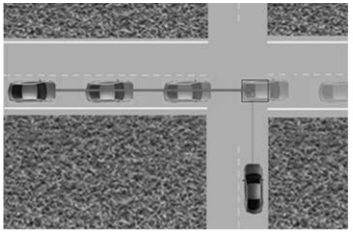

**Turning Left Across Oncoming Traffic**

When the system detects that the vehicle is turning left and there is risk for collision with an oncoming vehicle, Intersection Automatic Emergency Braking provides a red flashing alert on the windshield and rapid audible alerts or pulses the driver seat. Intersection Automatic Emergency Braking can provide a boost to braking or automatically brake the vehicle.

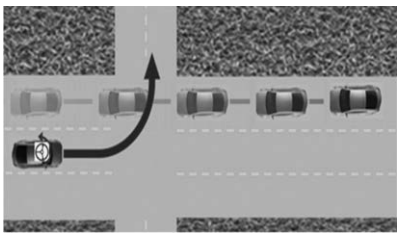

Intersection Automatic Emergency Braking can be set to Off, Alert, or Alert and Brake. To view available settings from the infotainment screen, touch Settings > Vehicle > Collision/ Detection Systems.

**Crossing Traffic Alert**

When your vehicle approaches an intersecting vehicle too rapidly and there is risk of a collision, a red warning graphic will flash on the windshield. Also, eight rapid high-pitched audible alerts will sound, or the driver seat will pulse five times. The side of the seat that is pulsed and the location of the audible alerts will depend on the direction that the intersecting vehicle is detected from. When this collision alert occurs, the brake system may prepare for driver braking to occur more rapidly which can cause a brief, mild deceleration. Continue to apply the brake pedal as needed.



**With Head-Up Display**

NOT FOR RESALE



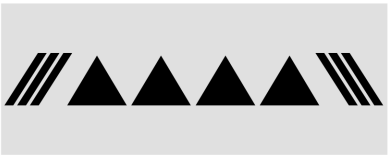

Without Head-Up Display

**Turning Across Oncoming Traffic Alert**

When your vehicle approaches another detected vehicle too rapidly, a red graphic will flash on the windshield. Also, eight rapid high-pitched audible alerts will sound from the front, or both sides of the Safety Alert Seat will pulse five times. When this Collision Alert occurs, the brake system may prepare for driver braking to occur more rapidly which can cause a brief, mild deceleration. Continue to apply the brake pedal as needed.




With Head-Up Display

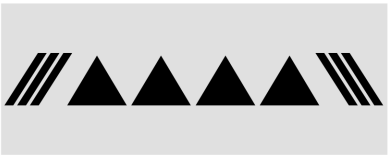

Without Head-Up Display

**Automatic Braking**

**⚠ Warning**

I-AEB may automatically brake or increase vehicle braking in situations when it may not be necessary or desired. Your vehicle could block the flow of traffic. I-AEB may respond to stationary or parked vehicles, signs, and other non-moving objects. To override AEB, firmly press the accelerator pedal, if it is safe to do so.

**⚠ Warning**

Using I-AEB while towing a trailer could cause you to lose control of the vehicle and crash. Turn the system to Alert or Off when towing a trailer.

If Intersection Automatic Emergency Braking detects it is about to crash into an intersecting vehicle, and the brakes have not been applied, it may automatically brake moderately or hard. This can help to avoid some crashes or lessen impact by reducing the speed of the vehicle. Always wear a seat belt and check that all passengers are properly restrained. Intersection Automatic Emergency Braking can automatically brake between 15 km/h (9 mph) and 80 km/h (50 mph). Automatic braking levels may be reduced under certain conditions, such as higher speeds.

Intersection Automatic Emergency Braking may slow the vehicle to a complete stop to try to avoid a potential crash. If this happens, Intersection Automatic Emergency Braking may engage the electric parking brake to hold the vehicle at a stop. Release the electric parking brake or firmly press the accelerator pedal to continue driving.

Intersection Automatic Emergency Braking may also apply the brakes automatically when there is an intersecting vehicle at risk of collision and the system determines that the driver is not braking with sufficient force.

NOT FOR RESALE



Minor brake pedal pulsations or pedal movement during this time is normal and the brake pedal should continue to be applied as needed.

**Cleaning the System**

If Intersection Automatic Emergency Braking does not seem to operate properly, cleaning the outside of the windshield in front of the rearview mirror may correct the issue.

## Front Pedestrian Braking (FPB) System

**⚠ Warning**

FPB does not provide an alert or automatically brake the vehicle, unless it detects a pedestrian or bicyclist. FPB may not detect pedestrians, including children, or bicyclists:

- When the pedestrian or bicyclist is not directly ahead, fully visible, or standing upright, or when part of a group.

(Continued)

**Warning (Continued)**

- Due to poor visibility, including nighttime conditions, fog, rain, or snow.
- If the FPB sensor is blocked by dirt, snow, or ice.
- If the headlights or windshield are not cleaned or in proper condition.

Be ready to take action and apply the brakes. For more information, see *Defensive Driving* ⇨ *166*. Keep the windshield, headlights, and FPB sensor clean and in good repair.

If equipped, the Front Pedestrian Braking system may help avoid or reduce the harm caused by front-end crashes with nearby pedestrians when driving in a forward gear. Front Pedestrian Braking displays an amber indicator, , when a nearby pedestrian is detected ahead. When approaching a detected pedestrian too quickly, Front Pedestrian Braking provides a red flashing alert on the windshield and rapid audible alerts or pulses the driver seat. Front Pedestrian Braking can provide a boost to braking or automatically brake the vehicle. This system includes Intelligent Brake Assist, and the Automatic Emergency Braking System may also respond to pedestrians. Always wear a seat belt and ensure that all passengers are properly restrained. See *Automatic Emergency Braking (AEB)* ⇨ *230*.

The Front Pedestrian Braking system can detect and alert to pedestrians in a forward gear at speeds between 8 km/h (5 mph) and 80 km/h (50 mph). During daytime driving, the system detects pedestrians up to a distance of approximately 40 m (131 ft). During nighttime driving, system performance is very limited.

Front Pedestrian Braking can be set to Off, Alert, or Alert & Brake through vehicle personalization. To view available settings for this feature, touch the Settings icon on the infotainment home page. Select “Vehicle” to display the list of available options and select “Collision/Detection Systems”.

**Detecting the Pedestrian Ahead**



NOT FOR RESALE



Front Pedestrian Braking alerts and automatic braking will not occur unless the Front Pedestrian Braking system detects a pedestrian. When a pedestrian that may enter the vehicle's forward path is detected, the pedestrian ahead indicator will display amber.

### Front Pedestrian Alert



**With Head-Up Display**

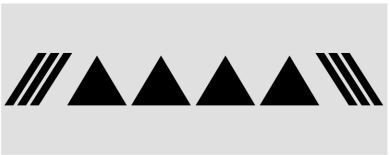

**Without Head-Up Display**

When the vehicle approaches a pedestrian ahead too rapidly, the red Front Pedestrian Braking alert display will flash on the windshield. Eight rapid high-pitched audible alerts will sound from the front, or both sides of the Safety Alert Seat will pulse five times. When this Pedestrian Alert occurs, the brake system may prepare for driver braking to occur more rapidly which can cause a brief, mild deceleration. Continue to apply the brake pedal as needed. Cruise control may be disengaged when the Front Pedestrian Alert occurs.

### Automatic Braking

**⚠ Warning**

FPB may alert or automatically brake the vehicle suddenly in situations where it is unexpected and undesired. It could falsely alert or brake for objects similar in shape or size to pedestrians, including shadows. This is normal operation and the vehicle does not need service. To override Automatic Braking, firmly press the accelerator pedal, if it is safe to do so.

**⚠ Warning**

Using the Front Pedestrian Braking system while towing a trailer could cause you to lose control of the vehicle and crash. Turn the system to Alert or Off when towing a trailer.

If Front Pedestrian Braking detects it is about to crash into a pedestrian directly ahead, and the brakes have not been applied, it may automatically brake moderately or brake hard. This can help to avoid some very low speed pedestrian crashes or reduce pedestrian injury. Front Pedestrian Braking can automatically brake to detected pedestrians between 8 km/h (5 mph) and 80 km/h (50 mph). Automatic braking levels may be reduced under certain conditions, such as higher speeds.

Front Pedestrian Braking may slow the vehicle to a complete stop to try and avoid a potential collision with a pedestrian. If this happens, Automatic Braking may engage the electric parking brake to hold the vehicle at a stop. Release the electric parking brake. A firm press of the accelerator pedal will also release Automatic Braking and the electric parking brake.

NOT FOR RESALE



Automatic Braking can be disabled through vehicle personalization. To view available settings for this feature, touch the Settings icon on the infotainment home page. Select "Vehicle" to display the list of available options and select "Collision/Detection Systems".

### Cleaning the System

If Front Pedestrian Braking does not seem to operate properly, cleaning the outside of the windshield in front of the rearview mirror may correct the issue.

## Lane Change Alert (LCA)

**Warning**

LCA does not alert the driver to vehicles outside of the system detection zones, pedestrians, bicyclists, or animals. It may not provide alerts when changing lanes under all driving conditions. Failure to use proper care when changing lanes may result in injury, death, or vehicle damage. Before making a lane change, always check mirrors, glance over your shoulder, and use the turn signals.

If equipped, the Lane Change Alert system is a lane-changing aid that assists drivers with avoiding lane change crashes that occur with moving vehicles in the side blind zone (or spot) areas or with vehicles rapidly approaching these areas from behind. The Lane Change Alert warning display will light up in the corresponding outside mirror and will flash if the turn signal is on.

Side Blind Zone Alert is included as part of the Lane Change Alert system.

**Lane Change Alert Detection Zones**

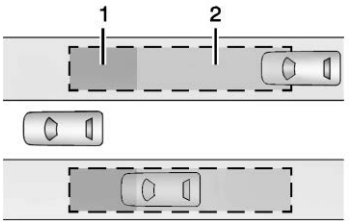


1. Side Blind Zone Alert Detection Zone
2. Lane Change Alert Detection Zone

The Lane Change Alert sensor covers a zone of approximately one lane over from both sides of the vehicle, or 3.5 m (11 ft). The height of the zone is approximately 0.5 m (1.5 ft) and 2 m (6 ft) off the ground. The Side Blind Zone Alert warning area starts at approximately the middle of the vehicle and goes back 5 m (16 ft). Drivers are also warned of vehicles rapidly approaching from up to 70 m (230 ft) behind the vehicle.

### How the System Works

The Lane Change Alert symbol lights up in the side mirrors when the system detects a moving vehicle in the next lane over that is in the side blind zone or rapidly approaching that zone from behind. A lit Lane Change Alert symbol indicates it may be unsafe to change lanes. Before making a lane change, check the Lane Change Alert display, check mirrors, glance over your shoulder, and use the turn signals.



**Left Side Mirror Display**



**Right Side Mirror Display**

NOT FOR RESALE



When the vehicle is started, both outside mirror Lane Change Alert displays will briefly come on to indicate the system is operating. When the vehicle is in a forward gear, the left or right side mirror display will light up if a moving vehicle is detected in the next lane over in that blind zone or rapidly approaching that zone. If the turn signal is activated in the same direction as a detected vehicle, this display will flash as an extra warning not to change lanes.

Lane Change Alert can be disabled through vehicle personalization. To view available settings from the infotainment app screen, select Settings > Vehicle > Collision/Detection Systems. If Lane Change Alert is disabled by the driver, the mirror displays will not light up.

### When the System Does Not Seem to Work Properly

The Lane Change Alert system requires some driving for the system to calibrate to maximum performance. This calibration may occur more quickly if the vehicle is driven on a straight highway road with traffic and roadside objects (e.g., guardrails, barriers). During a trip, the Lane Change Alert system is not operational until the vehicle first reaches a speed of 24 km/h (15 mph).

Lane Change Alert displays may not come on when passing a vehicle quickly or for a stopped vehicle. The system may alert to objects attached to the vehicle, such as a bicycle, or object extending out to either side of the vehicle. Attached objects may also interfere with the detection of vehicles. This is normal system operation; the vehicle does not need service.

Lane Change Alert may not always alert the driver to vehicles in the next lane over, especially in wet conditions or when driving on sharp curves. The system does not need to be serviced. The system may light up due to guardrails, signs, trees, shrubs, and other non-moving objects. This is normal system operation; the vehicle does not need service.

Lane Change Alert may not operate when the sensors in the left or right corners of the rear bumper are covered with mud, dirt, snow, ice, or slush, or in heavy rainstorms. For cleaning instructions, see "Washing the Vehicle" under *Exterior Care* ⇨ *311*. If the Driver Information Center still displays the system unavailable message after cleaning both sides of the vehicle toward the rear corners of the vehicle, see your dealer.

If the Lane Change Alert displays do not light up when moving vehicles are in the side blind zone or rapidly approaching this zone and the system is clean, the system may need service. Take the vehicle to your dealer.

### Driving with a Trailer

The Lane Change Alert detection zones that extend back from the side of the vehicle do not move further back when a trailer is towed.

Use caution while changing lanes when towing a trailer.

### Side Bicycle Detection

If equipped, the system may detect a bicyclist approaching from the side or rear of the vehicle.

If this occurs, an audible alert will sound in the direction of the detection, and the Safety Alert Seat will pulse if enabled through vehicle settings. To view available settings from the infotainment app screen, select Settings > Vehicle > Collision/Detection Systems.

Bicyclist Detection is available when the vehicle is in D (Drive), P (Park), and for a short time after the vehicle is turned off.

NOT FOR RESALE



If the vehicle detects a bicyclist when it is off, a Driver Information Center message may display and alert to the direction of the detection. In some cases, an Unavailable message may display. This is normal and does not mean that the system is broken.

#### Detection Zones

When the vehicle is in P (Park) or is turned off, a bicyclist can be detected 11 m (36 ft) behind the vehicle or 10 m (33 ft) to the side of the vehicle.

When the vehicle is in D (Drive), a bicyclist can be detected 3 m (10 ft) behind the vehicle or to the side of the vehicle.

#### Turning the Feature On or Off

Bicyclist Detection can be turned on or off through vehicle settings. To view available settings from the infotainment app screen, select Settings > Vehicle > Collision/ Detection Systems.

## Blind Zone Steering Assist (BZSA)

**⚠ Warning**

Do not rely on Blind Zone Steering Assist (BZSA) to prevent crashes. This system does not replace the need to pay attention and drive safely. Failure to use proper care when driving may result in vehicle damage, injury, or death.

- BZSA performance may be affected by weather and road conditions.
- BZSA does not provide steering assistance to avoid a vehicle that is in, or has entered, your lane of travel.
- BZSA will not prevent a towed trailer from crossing into the adjacent lane. Always monitor the trailer position while towing to ensure it is in the same lane as your vehicle. BZSA is only designed to detect when your vehicle unintentionally crosses detected lane lines.

If equipped, the Blind Zone Steering Assist system can detect a potential crash with a moving vehicle in the lane you are entering. It provides a brief, urgent turn of the steering wheel to alert you to take action to avoid a collision.

Blind Zone Steering Assist works with Lane Keep Assist and Lane Change Alert. Blind Zone Steering Assist operates when the vehicle is in a forward gear, and only when Lane Keep Assist and Lane Change Alert are enabled and able to assist. See *Lane Keep Assist (LKA)* ⇨ *241*. See *Lane Change Alert (LCA)* ⇨ *236*.

Blind Zone Steering Assist will provide a steering correction when your vehicle is about to leave the current lane of travel, with the possibility of a collision with a vehicle in the adjacent lane. This steering correction happens closer to the center of the lane and has a stronger steering correction than Lane Keep Assist. Unlike Lane Keep Assist, the steering correction with Blind Zone Steering Assist will happen even if your turn signal is on in the direction of lane departure.

In addition to the Blind Zone Steering Assist steering intervention, the  will turn amber, six audible alerts or six seat pulses will occur, if equipped with Safety Alert Seat, and  or  will flash on the outside rear view mirror.

NOT FOR RESALE



## Traffic Sign Assistant

| Caution |
| --- |
| The system is intended to assist the driver within a defined speed range to discern certain traffic signs. Always pay attention to posted speed limit signs.<br>Do not ignore traffic signs which are not displayed by the system.<br>The system does not discern any signs other than the conventional traffic signs that might give or end a speed limit. It may not detect some electronic speed signs.<br>Depending on the weather conditions or problems with traffic signs, a traffic sign may not be recognized or a sign different from the actual traffic sign may be displayed.<br>Do not let this special feature tempt you into taking risks when driving.<br>Always adapt vehicle speed to the road conditions.<br>Driver assistance systems do not relieve the driver from full responsibility for vehicle operation. |

If equipped, Traffic Sign Assistant recognizes designated traffic signs via the front camera located behind the windshield in front of the interior rear view mirror, and displays the detected speed limit in the Driver Information Center. Traffic Sign Assistant requires an active OnStar subscription. Additionally, speed limit information from the navigation system map database may be used.

Traffic signs that are detected are:

- Speed Limit
- Constraint Signs

### Display Indication

The currently detected speed limit is displayed in the Driver Information Center until the next speed limit or end of speed limit sign is detected. Depending on the vehicle, the current valid speed limit is permanently displayed on the Driver Information Center or in the upper left of the instrument cluster.

A **(--)** symbol in a frame indicates there is a sign detected which cannot be clearly identified by the system.

A **(/)** symbol in a frame indicates that the feature is turned off or has failed.

See *Instrument Cluster* ⇨ *97*.

### Alert Function

If equipped, an audible alert may sound when you have exceeded the indicated speed limit, or when a new speed limit is detected.

The alert function can be turned on or off. See “Settings” under *Instrument Cluster* ⇨ *97*.

Each time the vehicle is started, the customization options will be turned on.

### System Reset

The content of the traffic sign display can be cleared. See “Settings” under *Instrument Cluster* ⇨ *97*.

Upon successful reset, a **(--)** symbol displays until the next traffic sign is detected or provided by the navigation system map data. In some cases, traffic sign memory is cleared automatically by the system.

The alert function automatically turns on when the system is reset.

### Navigation System Traffic Sign Detection

The currently displayed sign can either originate from sign detection using the camera, or from the navigation system map data. If the currently displayed sign originates from map data and the map information changes,

NOT FOR RESALE



a new sign will be displayed. This may lead to detection of a new sign although no sign on the road may have been passed. If the map data is unavailable, Traffic Sign Assistant will turn off automatically.

### Limitations

Traffic sign memory may not operate correctly if:

- The area of the windshield, where the front camera is located, is not clean or is affected by foreign objects, e.g., stickers, window tinting, etc.
- Traffic signs are completely or partially covered, are too low or high or difficult to discern.
- Traffic signs are incorrectly mounted or are damaged.
- Traffic signs do not comply with the approved traffic sign standards.
- The speed limit is displayed by certain types of electronic speed signs.
- There are adverse environmental conditions, e.g., heavy rain, snow, direct sunlight or shadows.
- The headlights are dirty or not correctly aligned when driving at night.
- The navigation map data is out of date.
- The navigation map is unavailable.

## Driver Attention Assist

If equipped, Driver Attention Assist alerts the driver to pay closer attention to the road ahead. Driver Attention Assist uses a camera-based Driver Monitoring System. The Driver Monitoring System on the steering column continually monitors the driver's head movements and eye gaze location to determine if the driver is drowsy or fatigued. Depending on the level of the driver's distraction or drowsiness, Driver Attention Assist will provide visual warnings, chimes, and, if equipped, haptic movements to gently guide the driver to look back at the road.

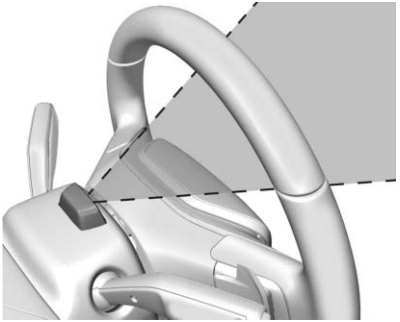

Sunglasses, hats, or other types of clothing that change the shape of the head may interfere with camera performance. To improve camera performance, raise or lower the steering wheel, or change the seat position.

Driver Attention Assist does not record video or audio. It is only active while driving with the feature enabled.

### How to Activate Driver Attention Assist

Driver Attention Assist turns on automatically every time the vehicle is started. The feature can be enabled or disabled through vehicle settings. To view available settings

NOT FOR RESALE



from the infotainment app screen, touch Settings > Vehicle > Driver Attention Assist > Drowsiness Detection.

### Drowsiness Alerts

Depending on the drowsiness level, Driver Attention Assist will display escalating alerts in the instrument cluster. These alerts progress as the drowsiness level increases. Each level is designated by a coffee cup and a Driver Information Center (DIC) message recommending that the driver consider taking a rest break. Depending on the driver's drowsiness level, the system will also send chimes or haptic alerts, if equipped with Safety Alert Seat. The higher alerts will be seen more frequently. Not all alerts may occur during a drowsy event.

When the maximum drowsiness alert occurs, the driver will be presented with the following options on the infotainment app screen:

- Phone a Friend
- Open a Playlist
- Navigate to Nearest Point of Interest (POI)

Select an option from the list and follow the instructions displayed on infotainment app screen.

### Cleaning the Camera

The camera lens cover on the steering column may become dirty over time. If this occurs, clean the lens cover with a soft cloth sprayed with glass cleaner. Wipe the lens gently, then dry it. Never use abrasive cloths, cleaners, or corrosive chemicals of any kind on the lens cover.

### Limitations

Some factors can impact the performance of the Driver Attention Assist feature, causing it to not to function as intended. These include (but are not limited to):

- Damage to the Driver Monitoring System, camera, or lens.
- The camera being blocked by the steering wheel, hands, or objects.

If there is a problem with the system, a DIC message or icon in the instrument cluster may display.

## Lane Keep Assist (LKA)

**⚠ Warning**

The LKA system does not continuously steer the vehicle. It may not keep the vehicle in the lane or give a Lane Departure Warning (LDW) alert, even if a lane marking is detected.

The LKA and LDW systems may not:

- Provide an alert or enough steering assist to avoid a lane departure or crash.
- Detect lane markings under poor weather or visibility conditions. This can occur if the windshield or headlights are blocked by dirt, snow, or ice, if they are not in proper condition, or if the sun shines directly into the camera.
- Detect road edges.
- Detect lanes on winding or hilly roads.

If LKA only detects lane markings on one side of the road, it will only assist or provide an LDW alert when approaching the lane on the side where it has detected

(Continued)

NOT FOR RESALE



**Warning (Continued)**

a lane marking. Even with LKA and LDW, you must steer the vehicle. Always keep your attention on the road and maintain proper vehicle position within the lane, or vehicle damage, injury, or death could occur. Always keep the windshield, headlights, and camera sensors clean and in good repair. Do not use LKA in bad weather conditions.

**⚠ Warning**

Using LKA on slippery roads could cause loss of control of the vehicle and a crash. Turn the system off.

**⚠ Warning**

LKA will not alert the driver if a towed trailer crosses into an adjacent lane of travel. Serious injury or property damage may occur if the trailer moves into another lane. Always monitor the trailer position while towing to make sure it is within the same lane as the tow vehicle.

If equipped, Lane Keep Assist may help avoid crashes due to unintentional lane departures. This system uses a camera to detect lane markings. The system can be ready to assist at speeds between approximately 60 km/h (37 mph) and 180 km/h (112 mph). On some vehicles, the system will instead operate above 50 km/h (31 mph). Lane Keep Assist may assist by gently turning the steering wheel if the vehicle approaches a detected lane marking. It may also provide a Lane Departure Warning alert if the vehicle crosses a detected lane marking. This system is not intended to keep the vehicle centered in the lane. Lane Keep Assist will not assist and alert if the turn signal is active, or if it detects that you are accelerating, braking or actively steering. Lane Keep Assist can be overridden by turning the steering wheel. If the system detects you are steering intentionally across a lane marker, the Lane Departure Warning will not be given. Do not expect the Lane Departure Warning to occur when you are intentionally crossing a lane marker.

### How the System Works

Lane Keep Assist uses a camera sensor installed on the windshield ahead of the rearview mirror to detect lane markings. It may provide brief steering assist if it detects an unintended lane departure. It may further provide an audible alert or the driver seat may pulse indicating that a lane marking has been crossed. The system does not provide a Lane Departure Warning when intentionally steering across a lane marker.

To turn Lane Keep Assist on and off, press / \ on the center console. If equipped, the indicator light on the button comes on when Lane Keep Assist is on and turns off when it is disabled. On some vehicles, a long press of over three seconds is required to turn Lane Keep Assist off.

Lane Keep Assist may not be available in extremely cold temperatures of less than approximately −30 °C (−34 °F).

When on, / \ is white, if equipped, indicating that the system is not ready to assist. / \ is green if Lane Keep Assist is ready to assist. Lane Keep Assist may assist by gently turning the steering wheel if the vehicle approaches a detected lane marking. / \ is amber when assisting. It may also provide a Lane Departure Warning alert by flashing / \ amber if the vehicle crosses a detected lane marking. Additionally, there may be three audible alerts,

NOT FOR RESALE



or the driver seat may pulse three times, on the right or left, depending on the lane departure direction.

#### Take Steering

The Lane Keep Assist system does not continuously steer the vehicle. If Lane Keep Assist does not detect active driver steering, an audible alert may be provided. Steer the vehicle to dismiss. Lane Keep Assist may become temporarily unavailable after repeated take steering alerts.

### When the System Does Not Seem to Work Properly

The system performance may be affected by:

- Close vehicles ahead
- Sudden lighting changes, such as when driving through tunnels
- Banked roads
- Roads with poor lane markings, such as two-lane roads

If the Lane Keep Assist system is not functioning properly when lane markings are clearly visible, cleaning the windshield may help.

A camera blocked message may display if the camera is blocked. Some driver assistance systems may have reduced performance or not work at all. An Lane Keep Assist or Lane Departure Warning unavailable message may display if the systems are temporarily unavailable. This message could be due to a blocked camera. The Lane Keep Assist system does not need service. Clean the outside of the windshield behind the rearview mirror.

Lane Keep Assist assistance and/or Lane Departure Warning alerts may occur due to tar marks, shadows, cracks in the road, temporary or construction lane markings, or other road imperfections. This is normal system operation; the vehicle does not need service. Turn Lane Keep Assist off if these conditions continue.

## Surround Vision Recorder

If equipped, Surround Vision Recorder may record video of the vehicle surroundings continuously, up to two hours, while automatically overwriting the oldest videos to continue recording.

When the feature is enabled, the recordings are saved on a USB device with the specifications of:

- 64GB storage capacity, with at least 32GB of storage available.
- USB type C or A.
- USB3.0 or greater.

It is recommended to use a single USB device specifically for Surround Vision Recorder. This device must be plugged into a data-enabled USB port.

Event recording features may be offered after a future software update to your vehicle. When available, you will learn about the new features through the application.

#### Security Recording

If Security Recording is enabled, the cameras automatically record the vehicle's exterior and, if equipped, the interior when the theft alarm is triggered. This recording will be a video of after the alarm becomes activated.

#### Configuring the System

To access settings, and the recordings playlist, select Recordings on the infotainment app screen.

NOT FOR RESALE



Always review the settings carefully before use.

**Limitations**

Certain features may not be available at all locations and under all vehicle conditions. No sound is included in the video footage. Recording will not occur in valet mode or while the vehicle is off.

Features are subject to change. Some features may be enabled with an additional subscription service. You will be informed which features apply after the software update.

When using Surround Vision Recorder, follow all local laws and regulations in your jurisdiction.

**Untrusted Media Devices**

Do not use untrusted mobile or media devices. They may negatively impact system operation and performance.

# Fuel

## Top Tier Fuel

GM recommends the use of TOP TIER Approved Gasoline to keep the engine clean, reduce engine deposits, and maintain optimal vehicle performance. Look for the TOP TIER Logo or see www.toptiergas.com for a list of TOP TIER Approved Gasoline marketers and applicable countries.

TOP TIER
Approved Gasoline

CATÉGORIE SUPÉRIEURE
Essence Approuvée

## Recommended Fuel




Regular unleaded gasoline meeting ASTM specification D4814 with a posted octane rating (R+M)/2 of 87 or greater is recommended. Do not use gasoline with a posted octane rating of less than 87, as this will result in reduced performance and driveability. If heavy knocking is heard when using gasoline rated at 87 or greater, the engine needs service.

Do not use any fuel labeled E85 or FlexFuel. Do not use gasoline with ethanol levels greater than 15% by volume.

## Prohibited Fuels

| Caution |
| --- |
| Do not use fuels with any of the following conditions; doing so may damage the vehicle and void its warranty:<br>(Continued) |

NOT FOR RESALE



**Caution (Continued)**

- For vehicles that are not FlexFuel, fuel labeled greater than 15% ethanol by volume, such as mid-level ethanol blends (16–50% ethanol), E85, or FlexFuel.
- Fuel with any amount of methanol, methylal, ferrocene, and aniline. These fuels can corrode metal fuel system parts or damage plastic and rubber parts.
- Fuel containing metals such as methylcyclopentadienyl manganese tricarbonyl (MMT), which can damage the emissions control system and spark plugs.
- Fuel with a posted octane rating of less than the recommended fuel. Using this fuel will lower fuel economy and performance, and may decrease the life of the emissions catalyst.

## Fuels in Foreign Countries

The U.S., Canada, and Mexico post fuel octane ratings in Anti-Knock Index (AKI). For fuel not to use in a foreign country, see *Prohibited Fuels* ⇨ *244*.

## Fuel Additives

TOP TIER Approved Gasoline is highly recommended for use with your vehicle. If your country does not have TOP TIER Approved Gasoline, add ACDelco Fuel System Cleaner to the vehicle's gasoline fuel tank at every oil change or 12 000 km (7,500 mi), whichever occurs first. TOP TIER Approved Gasoline and ACDelco Fuel System Cleaner will help keep your vehicle's engine fuel deposit free and performing optimally.

## Filling the Tank

An arrow on the fuel gauge indicates which side of the vehicle the fuel door is on. See *Fuel Gauge* ⇨ *99*.

**⚠ Warning**

Fuel vapors and fuel fires burn violently and can cause injury or death.

Follow these guidelines to help avoid injuries to you and others:

- Read and follow all the instructions on the fuel pump island.
- Turn off the engine when refueling.
- Keep sparks, flames, and smoking materials away from fuel.
- Do not leave the fuel pump unattended.
- Avoid using electronic devices while refueling.
- Do not re-enter the vehicle while pumping fuel.
- Keep children away from the fuel pump and never let children pump fuel.
- Before touching the fill nozzle, touch a metallic object to discharge static electricity from your body.

(Continued)

NOT FOR RESALE



**Warning (Continued)**

- Fuel can spray out if the fuel cap is opened too quickly. This spray can happen if the tank is nearly full, and is more likely in hot weather. Open the fuel cap slowly and wait for any hiss noise to stop, then unscrew the cap all the way.



To open the fuel door, push and release the rearward center edge of the door.

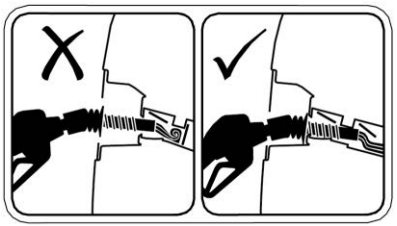

The capless system has two internal flapper doors. To prevent fuel spray, insert the nozzle fully to ensure both doors are open before refueling.

**⚠ Warning**

Overfilling the fuel tank by more than three clicks of a standard fill nozzle may cause:

- Vehicle performance issues, including engine stalling and damage to the fuel system.
- Fuel spills.
- Under certain conditions, fuel fires.

**⚠ Warning**

If a fire starts while you are refueling, do not remove the fill nozzle. Shut off the flow of fuel by shutting off the pump or by notifying the station attendant. Leave the area immediately.

The capless refueling system does not have a fuel cap. Fully insert and latch the fill nozzle, then begin fueling.

Be careful not to spill fuel. Wait five seconds after you have finished pumping before removing the fill nozzle. Clean fuel from painted surfaces as soon as possible. See *Exterior Care* ⇨ *311*. Push the fuel door closed until it latches.

**Filling the Tank with a Portable Fuel Container**

**⚠ Warning**

Attempting to refuel from a portable fuel container without using the funnel adapter may cause fuel spillage and damage the capless fuel system. This could cause a fire. You or others could be badly burned and the vehicle could be damaged.

NOT FOR RESALE



If the vehicle runs out of fuel and must be filled from a portable fuel container:

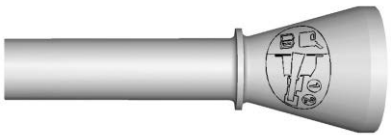

1. Locate the capless funnel adapter under the carpet in the trunk.
2. Insert and latch the funnel into the capless fuel system.
3. Remove and clean the funnel adapter and return it to the storage location.

## Filling a Portable Fuel Container

**Warning**

Never fill a portable fuel container while it is in the vehicle. Static electricity discharge from the container can ignite the fuel vapor. You or others could be badly burned and the vehicle could be damaged. To help avoid injury to you and others:

(Continued)

**Warning (Continued)**

- Dispense fuel only into approved containers.
- Do not fill a container while it is inside a vehicle, in a vehicle's trunk, in a pickup bed, or on any surface other than the ground.
- Bring the fill nozzle in contact with the inside of the fill opening before operating the nozzle. Maintain contact until filling is complete.
- Keep sparks, flames, and smoking materials away from fuel.
- Avoid using electronic devices while pumping fuel.

# Trailer Towing

## General Towing Information

**Warning**

You can lose control when towing a trailer if the correct equipment is not used or the vehicle is not driven properly. For example, if the trailer is too heavy or the trailer brakes are inadequate for the load, the vehicle may not stop as expected. You and others could be seriously injured. The vehicle may also be damaged, and the repairs would not be covered by the vehicle warranty. Pull a trailer only if all the steps in the Trailer Towing Supplement have been followed. Ask your dealer for advice and information about towing a trailer with the vehicle.

To find detailed preparation information, refer to the Trailer Towing Supplement online at:

**For United States:** www.buick.com/support/vehicle/manuals-guides

**For Canada:** www.buick.ca/en/support/vehicle/manuals-guides

**For Mexico:** www.buick.com.mx/servicios-de-asistencia/manual-de-propietario

NOT FOR RESALE



To tow a disabled vehicle, see *Transporting a Disabled Vehicle* ⇨ *307*.

To tow the vehicle behind another vehicle such as a motor home, see *Recreational Vehicle Towing* ⇨ *308*.

# Conversions and Add-Ons

## Add-On Electrical Equipment

**⚠ Warning**

The Data Link Connector is used for vehicle service and Emission Inspection/Maintenance testing. See *Malfunction Indicator Light (Check Engine Light)* ⇨ *102*. A device connected to the Data Link Connector — such as an aftermarket fleet or driver-behavior tracking device — may interfere with vehicle systems. This could affect vehicle operation and cause a crash. Such devices may also access information stored in the vehicle's systems.

**Caution**

Some electrical equipment can damage the vehicle or cause components to not work and would not be covered by the vehicle warranty. Always check with your dealer before adding electrical equipment.

Add-on equipment can drain the vehicle's 12-volt battery, even if the vehicle is not operating.

The vehicle has an airbag system. Before attempting to add anything electrical to the vehicle, see *Servicing the Airbag-Equipped Vehicle* ⇨ *62* and *Adding Equipment to the Airbag-Equipped Vehicle* ⇨ *63*.

NOT FOR RESALE



# Vehicle Care


**General Information**
- General Information ....250
- California Perchlorate Materials Requirements ....250
- Accessories and Modifications ....250

**Vehicle Checks**
- Doing Your Own Service Work ....250
- Hood ....251
- Engine Compartment Overview ....253
- Engine Oil ....254
- Engine Oil Life System ....256
- Automatic Transmission Fluid ....256
- Engine Air Filter Life System ....256
- Engine Air Cleaner/Filter ....257
- Cooling System ....258
- Engine Overheating ....261
- Washer Fluid ....262
- Brakes ....262
- Brake Pad Life System ....263
- Brake Fluid ....264
- Battery - North America ....265
- All-Wheel Drive ....266
- Park Brake and P (Park) Mechanism Check ....266
- Wiper Blade Replacement ....266
- Windshield Replacement ....267
- Gas Strut(s) ....268

**Headlight Aiming**
- Front Headlight Aiming ....269

**Bulb Replacement**
- LED Lighting ....269

**Electrical System**
- Electrical System Overload ....269
- Fuses and Circuit Breakers ....270
- Engine Compartment Fuse Block ....271
- Instrument Panel Fuse Block ....274
- Rear Compartment Fuse Block ....277

**Wheels and Tires**
- Tires ....280
- All-Season Tires ....281
- Winter Tires ....281
- Tire Sidewall Labeling ....281
- Tire Designations ....283
- Tire Terminology and Definitions ....283
- Tire Pressure ....285
- Tire Pressure for High-Speed Operation ....286
- Tire Pressure Monitor System ....286
- Tire Pressure Monitor Operation ....287
- Tire Inspection ....291
- Tire Rotation ....291
- When It Is Time for New Tires ....292
- Buying New Tires ....293
- Different Size Tires and Wheels ....294
- Uniform Tire Quality Grading ....295
- Wheel Alignment and Tire Balance ....296
- Wheel Replacement ....296
- Tire Chains and Other Traction Devices ....297
- If a Tire Goes Flat ....297
- Tire Changing ....298
- Compact Spare Tire ....304

**Jump Starting**
- Jump Starting - North America ....305

**Towing the Vehicle**
- Transporting a Disabled Vehicle ....307
- Recreational Vehicle Towing ....308

**Appearance Care**
- Exterior Care ....311
- Interior Care ....315
- Floor Mats ....318

NOT FOR RESALE



# General Information

For service and parts needs, visit your dealer. You will receive genuine GM parts and GM-trained and supported service people.

Genuine GM parts have one of these marks:







## California Perchlorate Materials Requirements

Certain types of automotive applications, such as airbag initiators, seat belt pretensioners, and lithium batteries contained in electronic keys, may contain perchlorate materials. Perchlorate Material – special handling may apply. See www.dtsc.ca.gov/hazardouswaste/perchlorate.

## Accessories and Modifications

**Caution**

When adding accessories or other equipment after the purchase of your vehicle, ensure you are not exceeding the vehicle axle weight ratings or overall weight ratings. Overloading the vehicle may cause damage. Repairs would not be covered by the vehicle warranty. Do not overload the vehicle. See *Vehicle Load Limits* ⇨ *172* for specific weight ratings.

Adding non-GM approved accessories or making vehicle modifications can affect performance and safety with airbags, braking, stability, ride and handling, emissions systems, aerodynamics, durability, Advanced Driver Assistance Systems, and electronic systems like antilock brakes, traction control, and stability control. These accessories or modifications could cause malfunction or damage not covered by the vehicle warranty.

Damage to suspension components caused by modifying vehicle height outside of factory settings will not be covered by the vehicle warranty.

Damage to vehicle components resulting from modifications or the installation or use of non-GM certified parts, including control module or software modifications, is not covered under the terms of the vehicle warranty and may affect remaining warranty coverage for affected parts.

Also, see *Adding Equipment to the Airbag-Equipped Vehicle* ⇨ *63*.

# Vehicle Checks

## Doing Your Own Service Work

**⚠ Warning**

It can be dangerous to work on your vehicle if you do not have the proper knowledge, service manual, tools, or parts. Always follow owner's manual procedures and consult the service manual for your vehicle before doing any service work.

NOT FOR RESALE



**Caution**

Even small amounts of contamination can cause damage to vehicle systems. Do not allow contaminants to contact the fluids, reservoir caps, or dipsticks.

The proper service manual provides more detail on vehicle service than this manual. To order the proper service manual, see *Publication Ordering Information* ⇨ *340*.

This vehicle has an airbag system. Before attempting to do your own service work, see *Servicing the Airbag-Equipped Vehicle* ⇨ *62*.

If equipped with remote start, open the hatch/trunk before performing any service work to prevent remote starting the vehicle accidentally. See *Remote Start* ⇨ *12*.

Keep a record with all parts receipts and list the mileage and the date of any service work performed. See *Maintenance Records* ⇨ *327*.

## Hood

**⚠ Warning**

For vehicles with auto engine stop/start, turn the vehicle off before opening the hood. If the vehicle is on, the engine will start when the hood is opened. You or others could be injured.

**⚠ Warning**

Components under the hood can get hot from running the engine. To help avoid the risk of burning unprotected skin, never touch these components until they have cooled, and always use a glove or towel to avoid direct skin contact.

Clear any snow from the hood before opening.

**To open the hood:**

1. Pull the hood release lever with the symbol. It is on the lower left side of the instrument panel.



2. Go to the front of the vehicle and locate the secondary release lever under the front center of the hood. Push the secondary hood release lever to the right to release.
3. After you have partially lifted the hood, the gas strut system will automatically lift the hood and hold it in the fully open position.

**To close the hood:**

1. Before closing the hood, be sure all filler caps are on properly, and all tools are removed.
2. Pull the hood down until the strut system is no longer holding up the hood.

NOT FOR RESALE



**⚠ Warning**

Do not drive the vehicle if the hood is not latched completely. The hood could open fully, block your vision, and cause a crash. You or others could be injured. Always close the hood completely before driving.

3. Allow the hood to fall. Check to make sure the hood is latched completely. Repeat this process with additional force if necessary.

NOT FOR RESALE



## Engine Compartment Overview

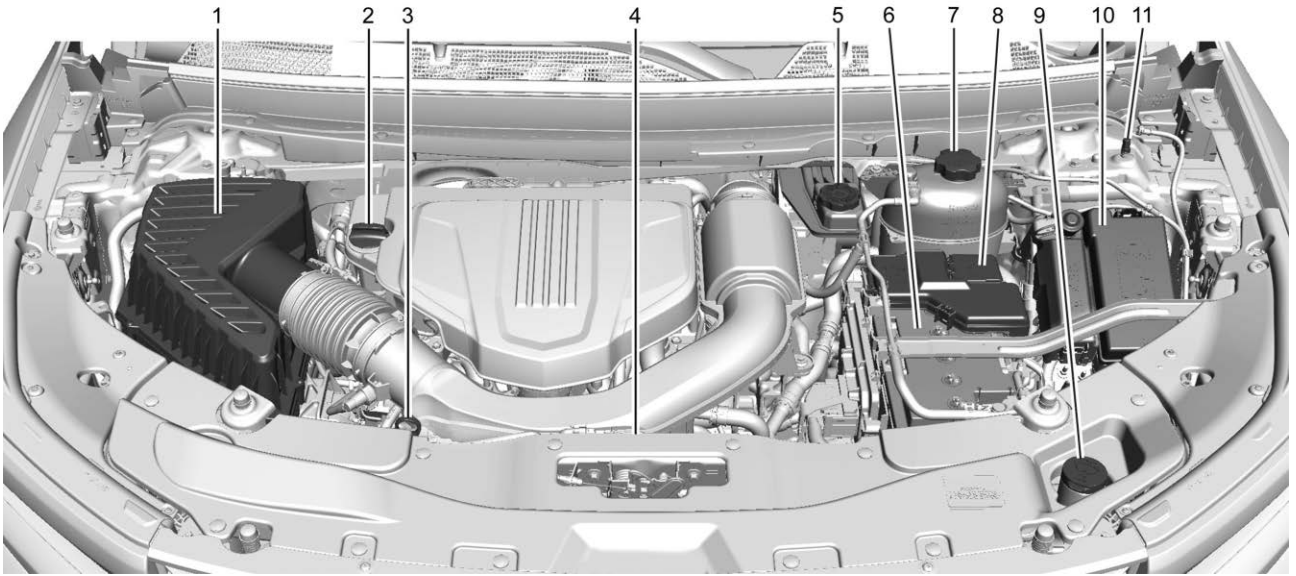


1. Engine Air Cleaner Filter. See *Engine Air Cleaner/Filter* ⇨ *257*.
2. Engine Oil Fill Cap. See *Engine Oil* ⇨ *254*.
3. Engine Oil Dipstick. See *Engine Oil* ⇨ *254*.
4. Engine Cooling Fan (Out of View). See *Cooling System* ⇨ *258*.
5. Brake Fluid Reservoir. See *Brake Fluid* ⇨ *264*.
6. Battery. See *Battery - North America* ⇨ *265*.

NOT FOR RESALE



7. Engine Coolant Surge Tank and Pressure Cap. See *Cooling System* ⇨ *258*.
8. Positive (+) Battery Terminal. See *Jump Starting - North America* ⇨ *305*.
9. Windshield Washer Fluid Reservoir. See *Washer Fluid* ⇨ *262*.
10. Fuse Block. See *Engine Compartment Fuse Block* ⇨ *271*.
11. Remote Negative (-) Battery Terminal. See *Jump Starting - North America* ⇨ *305*.

## Engine Oil

To ensure proper engine performance and long life, careful attention must be paid to engine oil. Following these simple, but important steps will help protect your investment:

- Use engine oil approved to the proper specification and of the proper viscosity grade. See "Selecting the Right Engine Oil" in this section.
- Check the engine oil level regularly and maintain the proper oil level. See "Checking Engine Oil" and "When to Add Engine Oil" in this section.
- Change the engine oil at the appropriate time. See *Engine Oil Life System* ⇨ *256*.
- Always dispose of engine oil properly. See "What to Do with Used Oil" in this section.

### Checking Engine Oil

Check the engine oil level regularly, every 650 km (400 mi), especially prior to a long trip. The engine oil dipstick handle is a loop. See *Engine Compartment Overview* ⇨ *253* for the location.

**⚠ Warning**

The engine oil dipstick handle may be hot; it could burn you. Use a towel or glove to touch the dipstick handle.

If a low oil Driver Information Center message displays, check the oil level.

Follow these guidelines:

- To get an accurate reading, ensure the vehicle is on level ground. Check the engine oil level after the engine has been off for at least two hours. Checking the engine oil level on steep grades or too soon after engine shutoff can result in incorrect readings. Accuracy improves when checking a cold engine prior to starting. Remove the dipstick and check the level.
- If unable to wait two hours, the engine must be off for at least 15 minutes if the engine is warm, or at least 30 minutes if the engine is not warm. Pull out the dipstick, wipe it with a clean paper towel or cloth, then push it back in all the way. Remove it again, keeping the tip down, and check the level.

### When to Add Engine Oil



NOT FOR RESALE



If the oil is below the cross-hatched area at the tip of the dipstick and the engine has been off for at least 15 minutes, add 1 L (1 qt) of the recommended oil and then recheck the level. See "Selecting the Right Engine Oil" later in this section for an explanation of what kind of oil to use. For engine oil crankcase capacity, see *Capacities and Specifications* ⇨ *329*.

**Caution**

Do not add too much oil. Oil levels above or below the acceptable operating range shown on the dipstick are harmful to the engine. If the oil level is above the operating range (i.e., the engine has so much oil that the oil level gets above the cross-hatched area that shows the proper operating range), the engine could be damaged. Drain the excess oil or limit driving of the vehicle, and seek a service professional to remove the excess oil.

See *Engine Compartment Overview* ⇨ *253* for the location of the engine oil fill cap.

Add enough oil to put the level somewhere in the proper operating range. Push the dipstick all the way back in when through.

## Selecting the Right Engine Oil

Selecting the right engine oil depends on both the proper oil specification and viscosity grade.

### Specification

Ask for and use full synthetic engine oils that meet the dexos1 specification. Engine oils that have been approved by GM as meeting the dexos1 specification are marked with the dexos1 approved logo. See www.gmdexos.com.

dexos™1
GM APPROVED - GEN 3

**Caution**

Failure to use the recommended engine oil or equivalent can result in engine damage not covered by the vehicle warranty.

### Viscosity Grade

Use SAE 0W-20 viscosity grade engine oil.

## Engine Oil Additives/Engine Oil Flushes

Do not add anything to the oil. The recommended oils meeting the dexos1 specification are all that is needed for good performance and engine protection.

Engine oil system flushes are not recommended and could cause engine damage not covered by the vehicle warranty.

## What to Do with Used Oil

Used engine oil contains certain elements that can be unhealthy for your skin and could even cause cancer. Do not let used oil stay on your skin for very long. Clean your skin and nails with soap and water, or a good hand cleaner. Wash or properly dispose of clothing or rags containing used engine oil. See the manufacturer's warnings about the use and disposal of oil products.

Used oil can be a threat to the environment. If you change your own oil, be sure to drain all the oil from the filter before disposal. Never dispose of oil by putting it in the trash or pouring it on the ground, into sewers, or into streams or bodies of water. Recycle it by taking it to a place that collects used oil.

NOT FOR RESALE



## Engine Oil Life System

### When to Change Engine Oil

The engine oil and filter must be changed, and the system must be reset at least once a year.

CHANGE ENGINE OIL SOON displays when the engine oil and filter needs service. Factors including run time, engine temperature, and distance driven affect how soon this light appears. Therefore, the time and distance in between oil change services may vary.

Once the CHANGE ENGINE OIL SOON light displays, change your oil as soon as possible within the next 1 000 km (600 mi). Check the oil regularly between services and keep it at the proper level. Your dealer has trained service technicians who can perform this work.

### Resetting the Engine Oil Life System

You must reset the engine oil life system to 100% after every oil change. To reset the engine oil life system:

1. Place the vehicle in P (Park).
2. From the infotainment home screen, select Vehicle Status > Maintenance > Oil Life > Reset.
3. Follow the menu and select Reset on the display screen. Then select Reset to confirm the reset. The percentage will change to 100%.

If CHANGE ENGINE OIL SOON displays when the vehicle is started and/or the OIL LIFE REMAINING is near 0%, the engine oil life system was not properly reset. Repeat the procedure.

If the system is reset accidentally, the oil must be changed at 5 000 km (3,000 mi) since the last oil change.

## Automatic Transmission Fluid

| Caution |
| --- |
| Use of the incorrect automatic transmission fluid may damage the vehicle, and the damage may not be covered by the vehicle warranty. Always use the correct automatic transmission fluid. See *Recommended Fluids and Lubricants* ⇨ *326*. |

Routine transmission fluid checks are unnecessary for this vehicle. If you notice signs of a leak, have it inspected and repaired by a dealer as soon as possible.

Follow the fluid change intervals listed in the *Maintenance Schedule* ⇨ *321*, and always use the recommended fluid.

## Engine Air Filter Life System

If equipped, this feature provides the engine air filter's remaining life and best timing for a change. The timing to change an engine air filter depends on driving and environmental conditions. See *Vehicle Status* ⇨ *113*.

### When to Change the Engine Air Filter

Check or replace the engine air filter if vehicle messages indicate inspection or replacement is needed. To check or replace the engine air filter, see "How to Inspect/Replace the Engine Air Cleaner/Filter" under *Engine Air Cleaner/Filter* ⇨ *257*. See your dealer for assistance.

If the Driver Information Center displays a message to check the engine air filter system, see your dealer.

### How to Reset the Engine Air Filter Life System

The system must be reset after the engine air filter is changed. To reset:

1. Place the vehicle in P (Park).

NOT FOR RESALE



2. From the infotainment home screen, select Vehicle Status > Maintenance > Engine Air Filter.
3. Follow the screen prompts and touch RESET on the display screen. Then touch RESET again to confirm. The percentage of filter life remaining will change to 100%.

## Engine Air Cleaner/Filter

The engine air cleaner/filter is in the engine compartment on the passenger side of the vehicle. See *Engine Compartment Overview* ⇨ *253* for location.

### When to Inspect the Engine Air Cleaner/Filter

- For intervals on changing and inspecting the engine air filter, see *Maintenance Schedule* ⇨ *321*.
- If equipped with Engine Air Filter Life System, see *Engine Air Filter Life System* ⇨ *256*.
- If driving in very dusty areas, follow the engine air filter inspecting and changing intervals, see *Maintenance Schedule* ⇨ *321*.

### How to Inspect/Replace the Engine Air Cleaner/Filter

**⚠ Warning**

Operating the engine with the air cleaner/filter off can cause you or others to be burned. Use caution when working on the engine. Do not start the engine or drive the vehicle with the air cleaner/filter off, as flames may be present if the engine backfires.

**Caution**

If the air cleaner/filter is off, dirt can easily get into the engine, which could damage it. Always have the air cleaner/filter in place when driving.

Do not start the engine or have the engine running with the engine air cleaner/filter housing open. Before removing the engine air cleaner/filter, make sure that the engine air cleaner/filter housing and nearby components are free of dirt and debris. Remove the engine air cleaner/filter. Lightly tap and shake the engine air cleaner/filter (away from the vehicle), to release loose dust and dirt. Inspect the engine air cleaner/filter for damage, and replace if damaged. Do not clean the engine air cleaner/filter or components with water or compressed air.

To inspect or replace the air cleaner/filter:

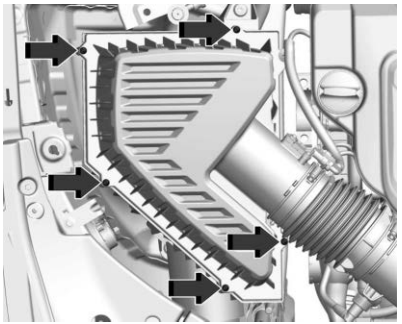

1. Remove the five screws and lift the cover out of the assembly.

**⚠ Warning**

If part replacement is necessary, the part must be replaced with one of the same part number or with an equivalent part. Use of

(Continued)

NOT FOR RESALE



**Warning (Continued)**

a replacement part without the same fit, form, and function may result in personal injury or damage to the vehicle.

2. Inspect or replace the engine air cleaner/filter.
3. Lower the cover and secure with the five screws.
4. If equipped with Engine Air Filter Life System, reset the system after replacing the engine air filter. See *Engine Air Filter Life System* ⇨ *256*.

## Cooling System

**⚠ Warning**

An underhood electric fan can start up even when the engine is not running and can cause injury. Keep hands, clothing, and tools away from any underhood electric fan.

**⚠ Warning**

Do not touch heater or radiator hoses, or other engine parts. They can be very hot and can burn you. Do not run the engine if there is a leak; all coolant could leak out. That could cause an engine fire and can burn you. Fix any leak before driving the vehicle.

The cooling system allows the engine to maintain the correct working temperature.

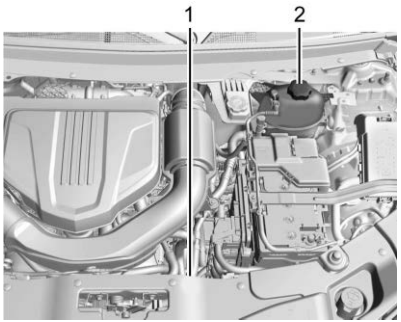


1. Engine Cooling Fan (Out of View)
2. Engine Coolant Surge Tank and Pressure Cap

### Engine Coolant

The engine cooling system is filled with dexcool engine coolant. Check and replace the coolant at the recommended intervals. See *Maintenance Schedule* ⇨ *321*.

If you see signs of a cooling system leak, see your dealer for service.

The following explains the cooling system and how to check and add coolant when it is low. If there is a problem with engine overheating, see *Engine Overheating* ⇨ *261*.

### What to Use

**⚠ Warning**

Plain water, or other liquids such as alcohol, can boil before the proper coolant mixture will. With plain water or the wrong mixture, the engine could get too hot but there would not be an overheat warning. The engine could catch fire and you or others could be burned.

NOT FOR RESALE



**Caution**

Do not use anything other than a mix of dexcool coolant that meets GM Standard GMW3420 and clean, drinkable water. Anything else can cause damage to the engine cooling system and the vehicle, which would not be covered by the vehicle warranty.

Use a 50/50 mixture of clean, drinkable water and dexcool coolant. This mixture:

- Gives freezing protection down to −37 °C (−34 °F), outside temperature.
- Gives boiling protection up to 129 °C (265 °F), engine temperature.
- Protects against rust and corrosion.
- Will not damage aluminum parts.
- Helps keep the proper engine temperature.

Never dispose of engine coolant by putting it in the trash, or by pouring it on the ground, or into sewers, streams, or bodies of water. Have the coolant changed by an authorized service center, familiar with legal requirements regarding used coolant disposal. This will help protect the environment and your health.

## Checking Coolant

The coolant should be checked when the engine is cold. Park the vehicle on a level surface. Turn off the engine and allow the cooling system to completely cool before proceeding.




Check to see if coolant is visible in the coolant surge tank. If coolant is visible but below the fill level mark on the surge tank, or if no coolant is visible in the surge tank, continue below, or see your dealer for service.

If there is no fill level mark on the surge tank, or it is obstructed from view, use the middle of the surge tank or the rib separating the top and bottom halves of the tank as your fill level reference point.

## How to Add Coolant to the Coolant Surge Tank

**⚠ Warning**

Spilling coolant on hot engine parts can burn you. Coolant contains ethylene glycol and it will burn if the engine parts are hot enough.

**⚠ Warning**

Steam and scalding liquids from a hot cooling system are under pressure. Turning the pressure cap, even a little, can cause them to come out at high speed and you could be burned. Never turn the cap when the cooling system, including the pressure cap, is hot. Wait for the cooling system and pressure cap to cool.

If no coolant is visible in the surge tank, follow the “Automatic Coolant Service Fill” procedure later in this section.

If coolant is visible in the surge tank but below the fill level mark:

1. Ensure the cooling system is cold.

NOT FOR RESALE



2. Remove the coolant surge tank pressure cap by turning the cap slowly counterclockwise about one full turn. If a hiss is heard, wait for that to stop. A hiss means there is still some pressure left in the system.
3. Keep turning the pressure cap slowly, and remove it.

**Caution**

If the pressure cap is not tightly installed, coolant loss and engine damage may occur. Be sure the cap is properly and tightly secured.

4. Fill the surge tank with the proper mixture to the fill level mark. Replace the pressure cap.

   Recheck the coolant level over the next several ignition cycles. Add coolant as required. If the coolant continues to drop below the proper level, there may be a leak in the cooling system. See your dealer for service.

### Automatic Coolant Service Fill

Use this feature to automatically remove air during the filling process when no coolant is visible in the surge tank, after service of cooling system components, or when coolant has been removed from the cooling system. Air in the cooling system can interrupt or block the flow of coolant and lead to engine overheating. The system opens and closes coolant valves and adjusts pump speed to move coolant through all parts of the cooling system, pushing trapped air back to the surge tank where it is expelled.

1. Ensure the cooling system is cold.
2. Remove the coolant surge tank pressure cap by turning the cap slowly counterclockwise about one full turn. If a hiss is heard, wait for that to stop. A hiss means there is still some pressure left in the system.
3. Keep turning the pressure cap slowly, and remove it.

**Caution**

If the pressure cap is not tightly installed, coolant loss and engine damage may occur. Be sure the cap is properly and tightly secured.

4. Fill the surge tank with the proper mixture to the fill level mark. Replace the pressure cap.
5. Connect the vehicle to a battery charger.
6. Place the vehicle in service mode. See *Ignition Positions* ⇨ *176*.
7. Turn off the air conditioning.
8. Set the parking brake.
9. Press down and hold both brake and accelerator pedals until the Auto Coolant Fill Started message displays in the Driver Information Center, and then release.
10. The Automatic Coolant Service Fill will run for up to 15 minutes. During this time, watch the level of the coolant in the surge tank.

    If the surge tank completely empties, turn off the vehicle and allow the Engine Control Module (ECM) to go to sleep, about two minutes, then restart the procedure from Step 1. Otherwise, allow the procedure to run to completion.
11. When the process is complete, the Auto Coolant Fill Completed message will display in the Driver Information Center. Turn the vehicle off.

NOT FOR RESALE



12. Recheck the coolant level in the surge tank once the cooling system is cold. If the level is below the fill level mark, repeat the procedure.

    In some cases, you may need to run the Automatic Coolant Service Fill procedure several times before the coolant system completely fills and the level remains steady at the fill level mark.

If after several attempts, the coolant continues to drop below the proper level, there may be a leak in the cooling system. See your dealer for service.

## Engine Overheating

**Caution**

Do not run the engine if there is a leak in the engine cooling system. This can cause a loss of all coolant and can damage the system and vehicle. Have any leaks fixed right away.

The vehicle has several indicators to warn of the engine overheating.

There is an engine coolant temperature gauge on the instrument cluster. See *Engine Coolant Temperature Gauge* ⇨ *99*. The vehicle may also display a message on the Driver Information Center (DIC).

If the decision is made not to lift the hood when this warning appears, get service help right away. See *Roadside Assistance Program* ⇨ *336*.

If the decision is made to lift the hood, make sure the vehicle is parked on a level surface. Then check to see if the engine cooling fan is running. If the engine is overheating, the fan should be running. If it is not, do not continue to run the engine. Have the vehicle serviced.

### If Steam Is Coming from the Engine Compartment

**⚠ Warning**

Steam and scalding liquids from a hot cooling system are under pressure. Turning the pressure cap, even a little, can cause them to come out at high speed and you could be burned. Never turn the cap when the cooling system, including the pressure cap, is hot. Wait for the cooling system and pressure cap to cool.

### If No Steam Is Coming from the Engine Compartment

If an engine overheat warning is displayed but no steam can be seen or heard, the problem may not be too serious. Sometimes the engine can get a little too hot when the vehicle:

- Climbs a long hill on a hot day.
- Stops after high-speed driving.
- Idles for long periods in traffic.

If the overheat warning is displayed with no sign of steam:

1. Turn the air conditioning off.
2. Turn the heater on to the highest temperature and to the highest fan speed. Open the windows as necessary.
3. When it is safe to do so, pull off the road, shift to P (Park) or N (Neutral), and let the engine idle.

If the engine coolant temperature gauge is no longer in the overheated area, the vehicle can be driven. Continue to drive the vehicle slowly for about 10 minutes. Keep a safe distance from the vehicle in front. If the warning does not

NOT FOR RESALE



come back on, continue to drive normally and have the cooling system checked for proper fill and function.

If the warning continues, pull over, stop, and park the vehicle right away.

If there is no sign of steam, idle the engine for three minutes while parked. If the warning is still displayed, turn off the engine until it cools down.

## Washer Fluid

### What to Use

**Caution**

- Do not use washer fluid that contains any type of water repellent coating. This can cause the wiper blades to chatter or skip.
- Do not use engine coolant (antifreeze) in the windshield washer. It can damage the windshield washer system and paint.

(Continued)

**Caution (Continued)**

- Do not mix water with ready-to-use washer fluid. Water can cause the solution to freeze and damage the washer fluid tank and other parts of the washer system.
- When using concentrated washer fluid, follow the manufacturer instructions for adding water.
- Fill the washer fluid tank only three-quarters full when it is very cold. This allows for fluid expansion if freezing occurs, which could damage the tank if it is completely full.

Always read the manufacturer's instructions before adding windshield washer fluid. If you are in an area where the temperature may fall below freezing, use a fluid that has sufficient protection against freezing.

### Adding Washer Fluid

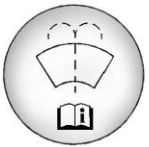

Open the cap with the washer symbol on it. Add washer fluid until the tank is full. See *Engine Compartment Overview* ⇨ *253* for reservoir location.

## Brakes

### Inspections

Visually inspect brake system components as follows:

- Brake lines and hoses for proper attachment, connections, binding, leaks, cracks, and chafing.
- Disc brake pads for wear and rotors for surface condition.
- Drum brake linings/shoes for wear or cracks.
- All other brake parts for cracks and leaks.

NOT FOR RESALE



When tires are rotated, inspect drum brake linings or disc brake pads for wear.

### Troubleshooting

#### Brake Pedal Travel

See your dealer if the brake pedal does not return to normal height, or if there is a rapid increase in pedal travel. This could be a sign that brake service may be required.

#### Brake Pulsation

If brakes are pulsating:

- Inspect rotors, pads, linings for uneven wear. Resurface or replace as needed.
- Check torque on all wheel nuts. Properly torqued wheel nuts are necessary to help prevent brake pulsation. Evenly tighten wheel nuts in the proper sequence to torque specifications. See *Capacities and Specifications* ⇨ *329*.

#### Brake Squeal and Brake Wear Indicators

**⚠ Warning**

The brake wear warning sound means that soon the brakes will not work well. That could lead to a crash. When the brake wear warning sound is heard, have the vehicle serviced.

Disc brake linings have built-in wear indicators that make a high-pitched warning sound when the brake linings are worn, and new linings are needed. The sound can come and go or can be heard all the time when the vehicle is moving, except when applying the brake pedal firmly.

Some driving conditions or climates can cause a brake squeal when the brakes are first applied, clearing up following several applications. This does not mean something is wrong with the brakes.

### Replacing Brake System Parts

**Caution**

Continuing to drive with worn-out brake linings could result in costly brake repairs.

Brake pads should be replaced as complete axle sets.

Always replace brake system parts with new, approved replacement parts. If this is not done, the brakes may not work properly. The braking performance can change in many ways if the wrong brake parts are installed or if parts are improperly installed.

## Brake Pad Life System

### When to Change Brake Pads

This vehicle has a system that estimates the remaining life of the front and back brake pads. Brake pad life is displayed in the infotainment screen, along with a percentage for each axle. The system must be reset every time the brake pads are changed.

When the system has determined that the brake pads need to be replaced, a message will display, which may include mileage remaining.

Brake pads should always be replaced as complete axle sets.

### How to Reset the Brake Pad Life System

The system will automatically detect when significantly worn brake pads are replaced. When the ignition is turned on after new pads

NOT FOR RESALE



and wear sensors are installed, a message will display. Follow the prompts to reset the system.

If equipped, the brake pad life system can also be manually reset:

1. On the infotainment home screen, select Vehicle Status > Maintenance > Brake Pad Life. See *Vehicle Status* ⇨ *113*.
2. Select either Reset Front Brake Pads or Reset Back Brake Pads as appropriate.
3. Select YES on the confirmation message. Repeat for pads on the other axle if they were also replaced.

### How to Disable the Brake Pad Life System

The brake pad life system can be turned off. This may be necessary if aftermarket brake pads without wear sensors are installed. When the system is turned off, the front and back brake pad life percentages will not display. However, the built-in wear indicators that make a high-pitched warning sound when the brake pads are worn can still determine when the pads should be replaced. See *Brakes* ⇨ *262*.

If equipped, the brake pad life system can also be turned off:

1. On the infotainment home screen, select Vehicle Status > Maintenance > Brake Pad Life. See *Vehicle Status* ⇨ *113*.
2. Select Turn On/Off.
3. Follow the prompts to confirm.

Repeat these steps to turn the brake pad life system on again.

## Brake Fluid



The brake master cylinder reservoir is filled with GM approved DOT 4 brake fluid as indicated on the reservoir cap. See *Engine Compartment Overview* ⇨ *253* for the location of the reservoir.

When the brake fluid falls to a low level, the brake warning light comes on. See *Brake System Warning Light* ⇨ *104*.

### Checking Brake Fluid

**⚠ Warning**

If too much brake fluid is added, it can spill on the engine and burn, if the engine is hot enough. You or others could be burned, and the vehicle could be damaged. Add brake fluid only when work is done on the brake hydraulic system.

Always clean the brake fluid reservoir cap and the area around the cap before removing it.

To check the brake fluid, place the vehicle in P (Park) on a level surface. The brake fluid level should be between the Min and Max marks on the brake fluid reservoir.

There are only two reasons why brake fluid may be low:

- Normal brake lining wear. When new linings are installed, the fluid level will return to normal.
- Brake system fluid leak. With a leak, the brakes will not work well. To have the brake hydraulic system fixed, see your dealer.

NOT FOR RESALE



Do not top off the brake fluid. Adding fluid does not correct a leak. If fluid is added when the linings are worn, there will be too much fluid when new brake linings are installed. Add or remove fluid, as necessary, only when work is done on the brake hydraulic system.

Brake fluid absorbs water over time which degrades the effectiveness of the brake fluid. Replace brake fluid at the specified intervals to prevent increased stopping distance. See *Maintenance Schedule* ⇨ *321*.

**What to Add**

**⚠ Warning**

The wrong or contaminated brake fluid could result in damage to the brake system. This could result in the loss of braking leading to a possible injury. Always use the proper GM approved brake fluid.

**Caution**

If brake fluid is spilled on the vehicle's painted surfaces, the paint finish can be damaged. Immediately wash off any painted surface.

Use only GM approved DOT 4 brake fluid from a clean, sealed container. See *Recommended Fluids and Lubricants* ⇨ *326*.

## Battery - North America

The original equipment battery is maintenance free. Do not remove the cap and do not add fluid.

The vehicle has an Absorbed Glass Mat (AGM)12-volt battery. Refer to the replacement number shown on the original battery label when a new battery is needed. See *Engine Compartment Overview* ⇨ *253* for battery location.

Installation of a standard 12-volt battery will result in reduced 12-volt battery life.

When using a 12-volt battery charger on the 12-volt Absorbed Glass Mat (AGM) battery, some chargers have an Absorbed Glass Mat (AGM) battery setting on the charger. If available, use the Absorbed Glass Mat (AGM) setting on the charger, to limit charge voltage to 14.8 volts. Follow the charger manufacturer's instructions.

**Stop/Start System**

This vehicle has a Stop/Start system to shut off the engine to help conserve fuel. See *Stop/Start System* ⇨ *178*.

**⚠ Warning**

**WARNING:** Battery posts, terminals and related accessories can expose you to chemicals including lead and lead compounds, which are known to the State of California to cause cancer and birth defects or other reproductive harm. Wash hands after handling. For more information go to www.P65Warnings.ca.gov.

See *California Proposition 65 Warning* ⇨ *1*.

### Vehicle Storage

**⚠ Warning**

Batteries have acid that can burn you and gas that can explode. You can be badly hurt if you are not careful. Always wear eye protection. See *Jump Starting - North America* ⇨ *305* for tips on working around a battery without getting hurt.

NOT FOR RESALE



Infrequent Usage: Remove the black, negative (−) cable from the battery to keep the battery from running down.

Extended Storage: Remove the black, negative (−) cable from the battery or use a battery trickle charger.

## All-Wheel Drive

Under normal driving conditions, the All-Wheel Drive (AWD) system does not require maintenance unless there is a fluid leak or an unusual noise. If required, have the AWD system serviced by your dealer.

## Park Brake and P (Park) Mechanism Check

**⚠ Warning**

When you are doing this check, the vehicle could begin to move. You or others could be injured and property could be damaged. Make sure there is room in front of the vehicle in case it begins to roll. Be ready to apply the regular brake at once should the vehicle begin to move.

To check the parking brake and P (Park) mechanism:

1. Park on a steep hill with the vehicle facing downhill.
2. Keep your foot on the regular brake and set the parking brake.
3. Check the holding ability as follows:
   - **Parking brake:** Turn the vehicle on and shift to N (Neutral). Slowly remove your foot from the brake pedal until only the parking brake is holding the vehicle.
   - **P (Park) mechanism:** Turn the vehicle on and shift to P (Park). Then release the parking brake and slowly remove your foot from the regular brake pedal.

If there is excessive vehicle roll during these checks, contact your dealer for service.

## Wiper Blade Replacement

Windshield wiper blades should be inspected for wear and cracking. See *Maintenance Schedule* ⇨ *321*.

Replacement blades come in different types and are removed in different ways. For proper type and length, see your dealer.

**Caution**

Allowing the wiper arm to touch the windshield when no wiper blade is installed could damage the windshield. Any damage that occurs would not be covered by the vehicle warranty. Do not allow the wiper arm to touch the windshield.

### Front Wiper Blade Replacement

**Caution**

Damage may occur if the wiper blades are not in contact with the windshield before turning on the wiper system.

To replace the front wiper blades:

1. Pull the windshield wiper assembly away from the windshield.

NOT FOR RESALE



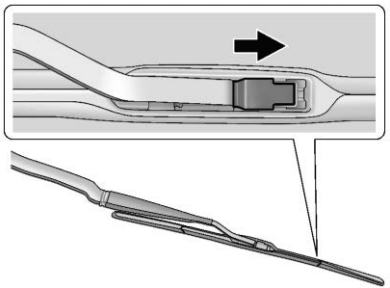

2. Lift up on the latch in the middle of the wiper blade where the wiper arm attaches.
3. With the latch open, pull the wiper blade down toward the windshield far enough to release it from the J-hooked end of the wiper arm.
4. Remove the wiper blade.
5. Reverse Steps 1–3 for wiper blade replacement.

### Rear Wiper Blade Replacement

To replace the wiper blade:



1. Lift the wiper arm away from the windshield.

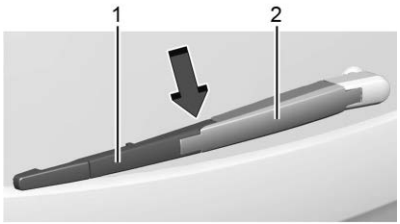


2. While holding the wiper arm, press down at the end of the wiper blade assembly (1) where it attaches to the wiper arm (2) to remove the wiper bade assembly from the wiper arm.

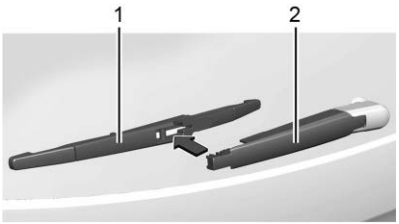


3. Align the new wiper blade assembly (1) with the wiper arm (2) and install by pushing up on the wiper blade assembly until it clicks into place on the wiper arm.

## Windshield Replacement

A replacement windshield must be GM approved and installed according to GM specifications to maintain its features and functionality (for example, Advanced Driver Assistance Systems).

If your vehicle is equipped with any of the following features, see your dealer:

- Acoustic Windshield
- Heated Wiper Park
- Advanced Driver Assistance Systems. See *Advanced Driver Assistance Systems* ⇨ *216*.

NOT FOR RESALE



- Head-Up Display. See *Head-Up Display (HUD)* ⇨ *115*.

## Gas Strut(s)

**⚠ Warning**

If the gas struts that hold open the hood, trunk, and/or liftgate fail, you or others could be seriously injured. Take the vehicle to your dealer for service immediately. Visually inspect the gas struts for signs of wear, cracks, or other damage periodically. Check to make sure the hood/trunk/liftgate is held open with enough force. If struts are failing to hold the hood/trunk/liftgate, do not operate. Have the vehicle serviced.

**Caution**

Do not apply tape or hang any objects from gas struts. Also do not push down or pull on gas struts. This may cause damage to the vehicle.

Your vehicle may be equipped with gas strut(s) to provide assistance in lifting and holding open the hood/trunk/liftgate system in full open position.

See your dealer to have the gas strut(s) serviced. See *Maintenance Schedule* ⇨ *321*.



**Hood**

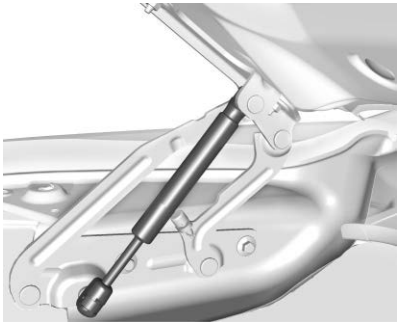

**Trunk**



**Liftgate**

NOT FOR RESALE



# Headlight Aiming

## Front Headlight Aiming

Headlight aim has been preset and should need no further adjustment.

If the vehicle is damaged in a crash, the headlight aim may be affected. If adjustment to the headlights is necessary, see your dealer.

# Bulb Replacement

## LED Lighting

| Caution |
| --- |
| Do not replace incandescent bulbs with aftermarket LED replacement bulbs. This can cause damage to the vehicle electrical system. |

This vehicle may be equipped with incandescent bulbs and LED lights. For replacement of any LED lighting assembly, contact your dealer.

# Electrical System

## Electrical System Overload

The vehicle has fuses and circuit breakers to protect the wires powering the devices in your vehicle against an electrical system overload.

Circuit breakers open and close to protect the circuit when the electrical load is too heavy. The internal filament may permanently open under a heavy load. If this happens, replace the fuse to restore the protected electrical function and reduce the risk of circuit overload and electrical fire.

Fuses and circuit breakers protect the wires powering the devices in your vehicle.

To check a fuse, look at the band inside the fuse. If the band is broken or melted, replace the fuse. Be sure to replace a bad fuse with a fuse of the identical size and rating.

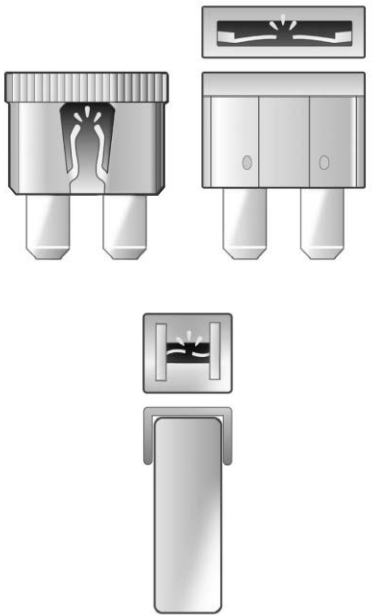

NOT FOR RESALE



### Replacing a Blown Fuse

If you need to replace a fuse, choose a fuse of the same amperage from the fuse block. Use either a SPARE fuse or a non-essential feature if there are no SPARE fuses of the correct amperage. Replace the blown fuse as soon as possible.

To replace a blown fuse:

1. Turn off the vehicle.
2. Locate the fuse puller in the engine compartment fuse block.

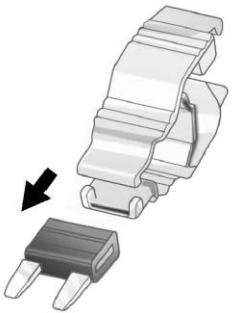

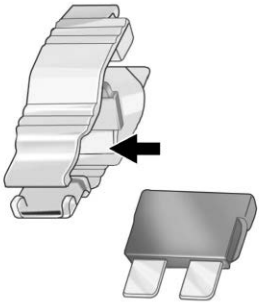

3. Use the fuse puller to remove the fuse from the top or side, as shown above.
4. If the fuse must be replaced immediately, temporarily replace the fuse with one of the same amperage from the fuse block. Choose a non-essential vehicle feature to safely operate the vehicle. Repeat Steps 2–3.
5. Insert the replacement fuse into the empty slot of the blown fuse.

See your dealer to replace the blown fuse.

### Headlight Wiring

An electrical overload may cause the lights to go on and off, or in some cases to remain off. See your dealer if the lights go on and off or remain off.

### Windshield Wipers

Overload due to heavy snow or ice may cause damage to the wiper linkage. Always clear heavy snow and ice from the windshield before using the windshield wipers.

If the wiper motor overheats due to heavy snow or ice, the windshield wipers will stop until the motor cools. Once the motor has cooled down, the wipers will restart.

Address any electrical overload as soon as possible. See your dealer.

## Fuses and Circuit Breakers

**⚠ Danger**

Fuses and circuit breakers are marked with their ampere rating. Do not exceed the specified amperage rating when replacing fuses and circuit breakers. Use of an

(Continued)

NOT FOR RESALE



**Danger (Continued)**

oversized fuse or circuit breaker can result in a vehicle fire. You and others could be seriously injured or killed.

**⚠ Warning**

Installation or use of fuses that do not meet GM's original fuse specifications is dangerous. The fuses could fail, and result in a fire. You or others could be injured or killed, and the vehicle could be damaged.

The fuses and circuit breakers protect the electrical system from short circuits, greatly reducing the chance of electrical damage or fire.



See *Accessories and Modifications* ⇨ *250* and *General Information* ⇨ *250*.

To check or replace a blown fuse, see *Electrical System Overload* ⇨ *269*.

## Engine Compartment Fuse Block

The underhood fuse block is in the engine compartment, on the driver side of the vehicle.

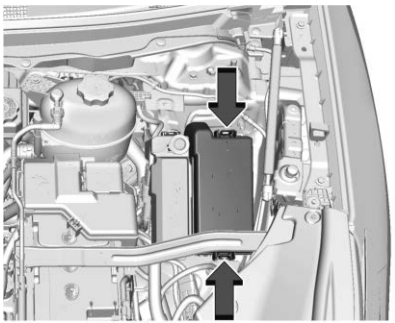

**Caution**

Do not pull the engine compartment fuse block lever, since it is intended only for service purposes. If pulled, vehicle malfunction may occur.

To remove the fuse block cover, press the clips on the cover and lift it straight up.

**Caution**

Spilling liquid on any electrical component on the vehicle may damage it. Always keep the covers on any electrical component.

To remove fuses, use the fuse puller and pull straight out.

NOT FOR RESALE



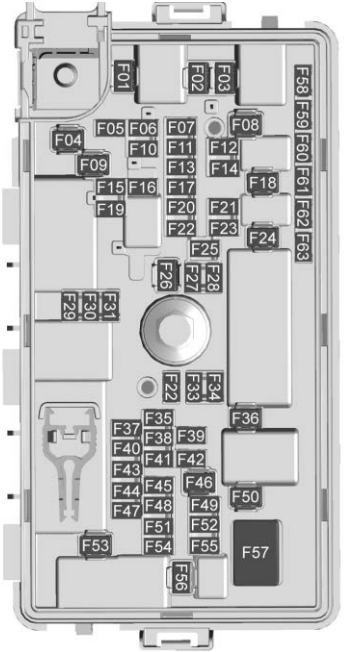


The vehicle may not be equipped with all of the fuses, relays, and features shown.

| Fuses | Usage |
|---|---|
| F01 | SPARE |
| F02 | SPARE |
| F03 | FRT_WIPER – Front Wiper |
| F04 | SPARE |
| F05 | SPARE |
| F06 | HDLP RT – Headlight Right |
| F07 | RR_WIPER – Rear Wiper |
| F08 | SPARE |
| F09 | RR DEFOG – Rear Defog |
| F10 | ELM_4 – Exterior Lighting Module 4 |
| F11 | HDLP LT – Headlight Left |
| F12 | HORN |
| F13 | SPARE |
| F14 | SPARE |
| F15 | SPARE |

| Fuses | Usage |
|---|---|
| F16 | RR_WPR_CTRL – Rear Wiper Control |
| F17 | RLY COIL GND – Relay Coil Ground |
| F18 | DC DC BATT1 – Direct Current Direct Current Battery 1 |
| F19 | ELM7 – Exterior Lighting Module 7 |
| F20 | SPARE |
| F21 | SPARE |
| F22 | ELM_5 – Exterior Lighting Module 5 |
| F23 | WIPER_DE_ICE |
| F24 | EBCM1 – Electronic Brake Control Module 1 |
| F25 | ELM_3 – Exterior Lighting Module 3 |
| F26 | SPARE |

NOT FOR RESALE



| Fuses | Usage |
|---|---|
| F27 | TRLR_STP_TRN_LT– Trailer Light Stop Left |
| F28 | TRLR_STP_TRN_RT – Trailer Light Stop Right |
| F29 | WASH |
| F30 | AERO SHUTTER |
| F31 | SPARE |
| F32 | PCM – Power Control Module |
| F33 | SPARE |
| F34 | SPARE |
| F35 | PCM – Power Control Module |
| F36 | STRTR MTR – Starter Motor |
| F37 | AC CLUTCH GAS – Alternating Current Clutch Gas |

| Fuses | Usage |
|---|---|
| F38 | SOL CP_TURBO BYPASS – Solenoid Turbo Bypass |
| F39 | COIL ODD |
| F40 | SPARE |
| F41 | SNSR MAF/IAT/H/P SNSR O2H MTR EVAPP |
| F42 | SPARE |
| F43 | SPARE |
| F44 | SPARE |
| F45 | SPARE |
| F46 | SPARE |
| F47 | SPARE |
| F48 | SPARE |
| F49 | SPARE |
| F50 | E-PHASER – Electronic Phaser |
| F51 | SPARE |

| Fuses | Usage |
|---|---|
| F52 | PCM 2 – Power Control Module 2 |
| F53 | SPARE |
| F54 | AIR_PUMP |
| F55 | SPARE |
| F56 | STRTR PINION |
| F57 | WATER PUMP |
| F58 | SERVICE FUSE |
| F59 | SERVICE FUSE |
| F60 | SERVICE FUSE |
| F61 | SERVICE FUSE |
| F62 | SERVICE FUSE |
| F63 | SERVICE FUSE |

NOT FOR RESALE



## Instrument Panel Fuse Block

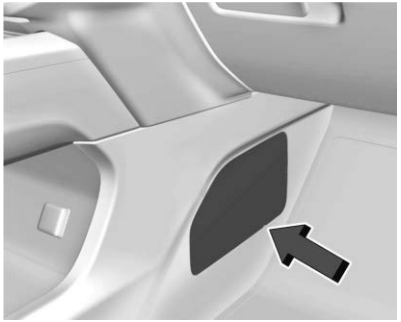

The instrument panel fuse block is inside the center console on the passenger side of the vehicle.

Remove the fuse access door by inserting a coin or tool into the slot of the access door.

To remove a fuse, use the fuse puller located in the Engine Compartment Fuse block.

NOT FOR RESALE



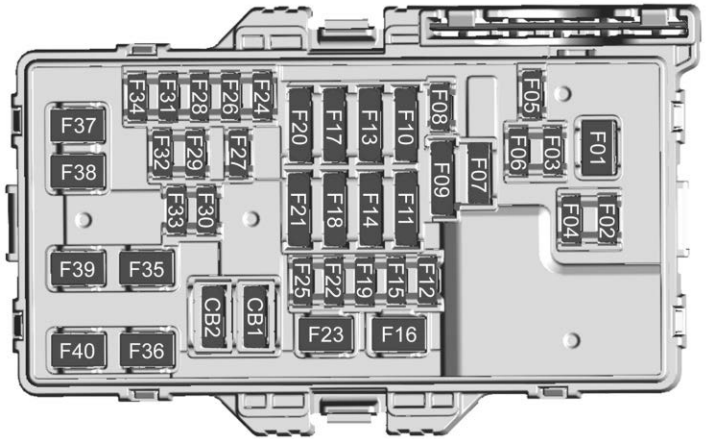


The vehicle may not be equipped with all the fuses, relays, and features shown. For the most accurate fuse amperage ratings and functions, refer to the fuse label.

| Fuses | Usage |
|---|---|
| F01 | BLOWER MOTOR |
| F02 | SPARE |
| F03 | SCL – Steering Column Lock |
| F04 | SPARE |
| F05 | BCM 2 – Body Control Module 2 |
| F06 | OHC – OnStar Hands-Free Calling |
| F07 | STEERING WHEEL CONTROL |
| F08 | TELEMATICS |
| F09 | S658_A505/A15_BAT 1 |
| F10 | RAIN SNR/UGDO – Rain Sensor/Universal Garage Door Opener |
| | SPARE |
| F11 | HVAC & TPIM_HUD – Heating, Ventilation, and Air Conditioning and Traction Power Inverter Module_Head-Up Display |
| F12 | RC_E600 |

NOT FOR RESALE



| Fuses | Usage |
|---|---|
| F13 | CGM & DLC – Central Gateway Module and Data Link Connector |
| F14 | EBCM & PCM – Electronic Brake Control Module and Power Control Module |
| F15 | AUX DISPLAY |
| F16 | APO_RR_CARGO – Auxiliary Power Outlet_Rear_Cargo |
| F17 | SDM_AOS – Sensing Diagnostic Module_Automatic Occupant Sensor |
| | SPARE |
| F18 | LF & RF_A766_DR & CO-DR_A765 |
| F19 | ELM RC – Exterior Lighting Module Ride Control |
| F20 | VKM – Virtual Key Module |
| | SPARE |
| F21 | VCU_BATT 1 & 2 – Virtual Cockpit Unit Battery 1 and 2 |
| F22 | SDM – Sensing Data Module |
| F23 | APO ROW 1 – Auxiliary Power Outlet Row 1 |
| F24 | WCM – Wireless Charging Module |
| F25 | HVPO – High Voltage Power Outlet |
| F26 | SPARE |
| F27 | AUX |
| F28 | LRR – Long Range Radar |
| F29 | SRR – Short Range Radar |
| F30 | – |
| F31 | BCM 3 – Body Control Module 3 |
| F32 | HSWM – Heated Steering Wheel Module |
| F33 | – |
| F34 | CPM – Column Position Module |
| F35 | AMPLIFIER |
| F36 | DC/DC BATT 2 – Direct Current/Direct Current Battery 2 |
| F37 | BCM 4 – Body Control Module 4 |
| F38 | AMPLIFIER 2 |
| F39 | ELM 6 – Exterior Lighting Module 6 |
| F40 | DCAC – Direct Current Alternating Current |

NOT FOR RESALE



| Fuses | Usage |
|---|---|
| CB01 | – |
| CB02 | APO – Auxiliary Power Outlet |

## Rear Compartment Fuse Block

The rear compartment fuse block is behind a trim panel on the driver side of the rear storage compartment.

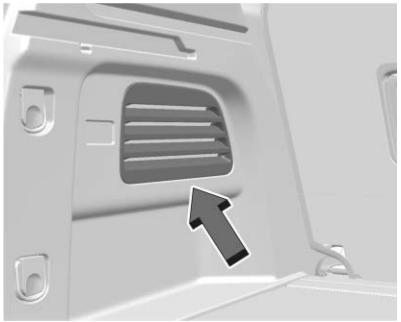

The panel is removed by prying along the top edge of the trim panel. Remove the trim panel to access the fuse block, or see your dealer.

To remove a fuse, use the fuse puller in the engine compartment fuse block.

NOT FOR RESALE



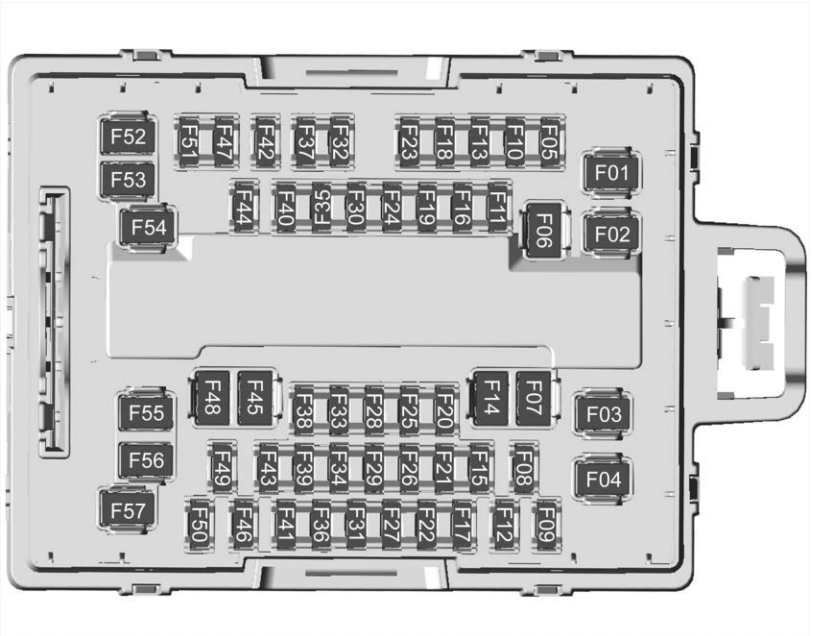


The vehicle may not be equipped with all the fuses, relays, and features shown. For the most accurate fuse amperage ratings and functions, refer to the fuse label.

| Fuses | Usage |
|---|---|
| F01 | RR_BLOW – Rear Blower |
| F02 | DSP_CODR – Door Switch Panel_Code |
| F03 | TAILGATE |
| F04 | TRLR_BAT 1 – Trailer Battery 1 |
| F05 | ACP 2 – AWD Control Processor 2 |
| F06 | PWR_FOLD_SEAT_L_R – Power Fold Seat Left and Rear |
| F07 | DSP – Door Switch Panel |
| F08 | SPARE |
| F09 | LAMPS_RT – Right Lights |
| F10 | SPARE |
| F11 | SPARE |
| F12 | SPARE |
| F13 | LAMPS_LT – Left Lights |

NOT FOR RESALE



| Fuses | Usage |
|---|---|
| F14 | SP_DRVR |
| F15 | MSM_DRIVER – Memory Seat Module Driver |
| F16 | MTR PFTS_ROW 2_L |
| F17 | FRT |
| F18 | SBP_CO_DRIVER |
| F19 | MTR PFTS_ROW 2_R |
| F20 | SPARE |
| F21 | RFA – Remote Function Actuator |
| F22 | SPARE |
| F23 | SPARE |
| F24 | SPARE |
| F25 | SPARE |
| F26 | CANISTER |
| F27 | UPA – Universal Park Assist |
| F28 | RDCM – Right Door Control Module |
| F29 | SBZA – Side Blind Zone Assist |
| F30 | TRLR_BACK_UP_LMP – Trailer Backup Lights |
| F31 | FCM – Front Camera Module |
| F32 | SPARE |
| F33 | ROW 2_BAT 1 – Second Row Battery 1 |
| F34 | SPARE |
| F35 | SPARE |
| F36 | ROW 2_BAT 2 – Second Row Battery 2 |
| F37 | SPARE |
| F38 | SPARE |
| F39 | SPARE |
| F40 | TRLR_PRK_LMP– Trailer Parking Lights |
| F41 | ELM 2 – Exterior Lighting Module 2 |
| F42 | DSP – Door Switch Panel |
| F43 | POWER FOLD SEAT SW/ N 3_ROW |
| F44 | OUT_OF_PARK_DISABLE |
| F45 | TRAILER_BRAKE |
| F46 | ACP 3 – AWD Control Processor 3 |
| F47 | FTZM – Fuel Tank Zone Module |
| F48 | SP_PASS |
| F49 | SPARE |
| F50 | ELM 1 – Exterior Lighting Module 1 |

NOT FOR RESALE



| Fuses | Usage |
|---|---|
| F51 | FRT_BAT 2 – Front Battery 2 |
| F52 | SPARE |
| F53 | SPARE |
| F54 | ROW 2_FOLD_RH – Second Row Right-hand Fold |
| F55 | ROW 3 |
| F56 | SUNROOF |
| F57 | RDCM – Right Door Control Module |

# Wheels and Tires

## Tires

Every new GM vehicle has high-quality tires made by a leading tire manufacturer. See the warranty manual for information regarding the tire warranty and where to get service. For additional information refer to the tire manufacturer.

**⚠ Warning**

- Poorly maintained and improperly used tires are dangerous.
- Overloading the tires can cause overheating as a result of too much flexing. There could be a blowout and a serious crash. See *Vehicle Load Limits* ⇨ *172*.
- Underinflated tires pose the same danger as overloaded tires. The resulting crash could cause serious injury. Check all tires frequently to maintain the recommended pressure. Tire pressure should be checked when the tires are cold.
- Overinflated tires are more likely to be cut, punctured, or broken by a sudden impact — such as when hitting a pothole. Keep tires at the recommended pressure.

(Continued)

**Warning (Continued)**

- Worn or old tires can cause a crash. If the tread is badly worn, replace them.
- Replace any tires that have been damaged by impacts with potholes, curbs, etc.
- Improperly repaired tires can cause a crash. Only your dealer or an authorized tire service center should repair, replace, dismount, and mount the tires.
- Do not spin the tires in excess of 56 km/h (35 mph) on slippery surfaces such as snow, mud, ice, etc. Excessive spinning may cause the tires to explode.

See *Tire Pressure for High-Speed Operation* ⇨ *286* for inflation pressure adjustment for high-speed driving.

NOT FOR RESALE



## All-Season Tires

This vehicle may come with all-season tires. These tires are designed to provide good overall performance on most road surfaces and weather conditions. Original equipment tires designed to GM's specific Tire Performance Criteria (TPC) have a TPC specification code molded onto the sidewall.

Consider installing winter tires on the vehicle if frequent driving on snow or ice-covered roads is expected. All-season tires provide adequate performance for most winter driving conditions, but they may not offer the same level of traction or performance as winter tires on snow or ice-covered roads. See *Winter Tires* ⇨ *281*.

## Winter Tires

This vehicle was not originally equipped with winter tires. Winter tires are designed for increased traction on snow and ice-covered roads. Consider installing winter tires on the vehicle if frequent driving on ice or snow covered roads is expected. See your dealer for details regarding winter tire availability and proper tire selection. Also, see *Buying New Tires* ⇨ *293*.

With winter tires, there may be decreased dry road traction, increased road noise, and shorter tread life. After changing to winter tires, be alert for changes in vehicle handling and braking.

If using winter tires:

- Use tires of the same brand and tread type on all four wheel positions.
- Use only radial ply tires of the same size, load range, and speed rating as the original equipment tires.

Winter tires with the same speed rating as the original equipment tires may not be available for H, V, W, Y, and ZR speed rated tires. If winter tires with a lower speed rating are chosen, never exceed the tire's maximum speed capability.

## Tire Sidewall Labeling

Useful information about a tire is molded into its sidewall. The examples show a typical passenger vehicle tire and a compact spare tire sidewall.

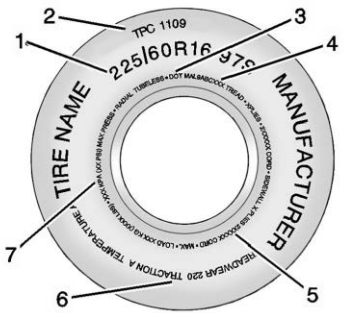


**Passenger Tire Example**

**(1) Tire Size :** The tire size is a combination of letters and numbers used to define a particular tire's width, height, aspect ratio, construction type, and service description. See the “Tire Size” illustration in this section.

**(2) TPC Spec (Tire Performance Criteria Specification) :** Original equipment tires designed to GM's specific tire performance criteria have a TPC specification code molded onto the sidewall. GM's TPC specifications meet or exceed all federal safety guidelines.

NOT FOR RESALE



**(3) DOT (Department of Transportation) :** The Department of Transportation (DOT) code indicates that the tire is in compliance with the U.S. Department of Transportation Motor Vehicle Safety Standards.

**DOT Tire Date of Manufacture :** The last four digits of the TIN indicate the tire manufactured date. The first two digits represent the week and the last two digits, the year. For example, the third week of the year 2020 would have a 4-digit DOT date of 0320. Week 01 is the first full week (Sunday through Saturday) of each year.

**(4) Tire Identification Number (TIN) :** The letters and numbers following the DOT (Department of Transportation) code are the Tire Identification Number (TIN). The TIN shows the manufacturer and plant code, tire size, and date the tire was manufactured. The TIN is molded onto both sides of the tire, although only one side may have the date of manufacture.

**(5) Tire Ply Material :** The type of cord and number of plies in the sidewall and under the tread.

**(6) Uniform Tire Quality Grading (UTQG) :** Tire manufacturers are required to grade tires based on three performance factors: tread wear, traction, and temperature resistance. For more information see *Uniform Tire Quality Grading* ⇨ *295*.

**(7) Maximum Cold Inflation Load Limit :** Maximum load that can be carried and the maximum pressure needed to support that load.

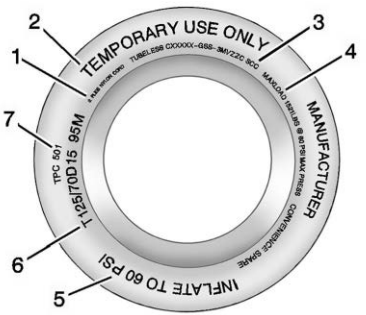


**Compact Spare Tire Example**

**(1) Tire Ply Material :** The type of cord and number of plies in the sidewall and under the tread.

**(2) Temporary Use Only :** The compact spare tire or temporary use tire should not be driven at speeds over 80 km/h (50 mph). The compact spare tire is for emergency use when a regular road tire has lost air and gone flat. If the vehicle has a compact spare tire, see *Compact Spare Tire* ⇨ *304* and *If a Tire Goes Flat* ⇨ *297*.

**(3) Tire Identification Number (TIN) :** The letters and numbers following the DOT (Department of Transportation) code are the Tire Identification Number (TIN). The TIN shows the manufacturer and plant code, tire size, and date the tire was manufactured. The TIN is molded onto both sides of the tire, although only one side may have the date of manufacture.

**(4) Maximum Cold Inflation Load Limit :** Maximum load that can be carried and the maximum pressure needed to support that load.

NOT FOR RESALE



**(5) Tire Inflation :** The temporary use tire or compact spare tire should be inflated to 420 kPa (60 psi). For more information on tire pressure and inflation see *Tire Pressure* ⇨ *285*.

**(6) Tire Size :** A combination of letters and numbers define a tire's width, height, aspect ratio, construction type, and service description. The letter “T” as the first character in the tire size means the tire is for temporary use only.

**(7) TPC Spec (Tire Performance Criteria Specification) :** Original equipment tires designed to GM's specific tire performance criteria have a TPC specification code molded onto the sidewall. GM's TPC specifications meet or exceed all federal safety guidelines.

## Tire Designations

### Tire Size

The example shows a typical passenger vehicle tire size.

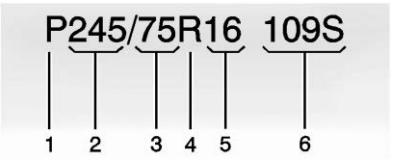


**Passenger (P-Metric) Tire**

**(1) Passenger (P-Metric) Tire :** The United States version of a metric tire sizing system. The letter "P" as the first character in the tire size means a passenger vehicle tire engineered to standards set by the U.S. Tire and Rim Association.

**(2) Tire Width :** The 3-digit number indicates the tire section width in millimeters from sidewall to sidewall.

**(3) Aspect Ratio :** A 2-digit number that indicates the tire height-to-width measurements. For example, if the tire size aspect ratio is 75, as shown in item (3) of the illustration, it would mean that the tire's sidewall is 75 percent as high as it is wide.

**(4) Construction Code :** A letter code is used to indicate the type of ply construction in the tire. The letter "R" means radial ply construction; the letter "D" means diagonal or bias ply construction.

**(5) Rim Diameter :** Diameter of the wheel in inches.

**(6) Service Description :** These characters represent the load index and speed rating of the tire. The load index represents the load carrying capacity a tire is certified to carry. The speed rating is the maximum speed a tire is certified to carry a load.

## Tire Terminology and Definitions

**Air Pressure :** The amount of air inside the tire pressing outward on each square inch of the tire. Air pressure is expressed in kPa (kilopascal) or psi (pounds per square inch).

**Aspect Ratio :** The relationship of a tire's height to its width.

NOT FOR RESALE



**Belt :** A rubber coated layer of cords that is located between the plies and the tread. Cords may be made from steel or other reinforcing materials.

**Bead :** The tire bead contains steel wires wrapped by steel cords that hold the tire onto the rim.

**Bias Ply Tire :** A pneumatic tire in which the plies are laid at alternate angles less than 90 degrees to the centerline of the tread.

**Cold Tire Pressure :** The amount of air pressure in a tire, measured in kPa (kilopascal) or psi (pounds per square inch) before a tire has built up heat from driving. See *Tire Pressure* ⇨ *285*.

**DOT Markings :** A code molded into the sidewall of a tire signifying that the tire is in compliance with the U.S. Department of Transportation (DOT) Motor Vehicle Safety Standards. The DOT code includes the Tire Identification Number (TIN), an alphanumeric designator which can also identify the tire manufacturer, production plant, brand, and date of production.

**GVWR :** Gross Vehicle Weight Rating. See *Vehicle Load Limits* ⇨ *172*.

**GAWR FRT :** Gross Axle Weight Rating for the front axle. See *Vehicle Load Limits* ⇨ *172*.

**GAWR RR :** Gross Axle Weight Rating for the rear axle. See *Vehicle Load Limits* ⇨ *172*.

**Intended Outboard Sidewall :** The side of an asymmetrical tire, that must always face outward when mounted on a vehicle.

**Kilopascal (kPa) :** The metric unit for air pressure.

**Light Truck (LT-Metric) Tire :** A tire used on light duty trucks and some multipurpose passenger vehicles.

**Load Index :** An assigned number ranging from 1 to 279 that corresponds to the load carrying capacity of a tire.

**Maximum Inflation Pressure :** The maximum air pressure to which a cold tire can be inflated. The maximum air pressure is molded onto the sidewall.

**Maximum Load Rating :** The load rating for a tire at the maximum permissible inflation pressure for that tire.

**Occupant Distribution :** Designated seating positions.

**Outward Facing Sidewall :** The side of an asymmetrical tire that has a particular side that faces outward when mounted on a vehicle. The side of the tire that contains a whitewall, bears white lettering, or bears manufacturer, brand, and/or model name molding that is higher or deeper than the same moldings on the other sidewall of the tire.

**Passenger (P-Metric) Tire :** A tire used on passenger cars and some light duty trucks and multipurpose vehicles.

**Recommended Inflation Pressure :** Vehicle manufacturer's recommended tire inflation pressure as shown on the tire placard. See *Tire Pressure* ⇨ *285* and *Vehicle Load Limits* ⇨ *172*.

NOT FOR RESALE



**Radial Ply Tire :** A pneumatic tire in which the ply cords that extend to the beads are laid at 90 degrees to the centerline of the tread.

**Rim :** A metal support for a tire and upon which the tire beads are seated.

**Sidewall :** The portion of a tire between the tread and the bead.

**Speed Rating :** An alphanumeric code assigned to a tire indicating the maximum speed at which a tire can operate.

**Traction :** The friction between the tire and the road surface. The amount of grip provided.

**Tread :** The portion of a tire that comes into contact with the road.

**Treadwear Indicators :** Narrow bands, sometimes called wear bars, that show across the tread of a tire when only 1.6 mm (1/16 in) of tread remains. See *When It Is Time for New Tires* ⇨ *292*.

**UTQGS (Uniform Tire Quality Grading Standards) :** A tire information system that provides consumers with ratings for a tire's traction, temperature, and treadwear. Ratings are determined by tire manufacturers using government testing procedures. The ratings are molded into the sidewall of the tire. See *Uniform Tire Quality Grading* ⇨ *295*.

**Vehicle Capacity Weight :** The number of designated seating positions multiplied by 68 kg (150 lbs) plus the rated cargo load. See *Vehicle Load Limits* ⇨ *172*.

**Vehicle Maximum Load on the Tire :** Load on an individual tire due to curb weight, accessory weight, occupant weight, and cargo weight.

**Vehicle Placard :** A label permanently attached to a vehicle showing the vehicle's capacity weight and the original equipment tire size and recommended inflation pressure. See “Tire and Loading Information Label” under *Vehicle Load Limits* ⇨ *172*.

## Tire Pressure

Tires need the correct amount of air pressure to operate effectively.

**⚠ Warning**

Neither tire underinflation nor overinflation is good. Underinflated tires, or tires that do not have enough air, can result in:

- Tire overloading and overheating, which could lead to a blowout
- Premature or irregular wear
- Poor handling
- Reduced fuel economy for internal combustion engine vehicles
- Reduced range for electric vehicles

Overinflated tires, or tires that have too much air, can result in:

- Unusual wear
- Poor handling
- Rough ride
- Needless damage from road hazards

NOT FOR RESALE



The Tire and Loading Information label on the vehicle indicates the original equipment tires and the correct cold tire inflation pressures. The recommended pressure is the minimum air pressure needed to support the vehicle's maximum load carrying capacity. See *Vehicle Load Limits* ⇨ *172*.

How the vehicle is loaded affects vehicle handling and ride comfort. Never load the vehicle with more weight than it was designed to carry.

### When to Check

Check the pressure of the tires once a month or more. Do not forget the spare, if the vehicle has one. The compact spare cold tire pressure should be at 420 kPa (60 psi). See *Compact Spare Tire* ⇨ *304*.

### How to Check

Use a good quality pocket-type gauge to check tire pressure. Proper tire inflation cannot be determined by looking at the tire. Check the tire inflation pressure when the tires are cold, meaning the vehicle has not been driven for at least three hours or no more than 1.6 km (1 mi).

Remove the valve cap from the tire valve stem. Press the tire gauge firmly onto the valve to get a pressure measurement. If the cold tire inflation pressure matches the recommended pressure on the Tire and Loading Information label, no further adjustment is necessary. If the inflation pressure is low, add air until the recommended pressure is reached. If the inflation pressure is high, press on the metal stem in the center of the tire valve to release air.

Recheck the tire pressure with the tire gauge.

Put the valve caps back on the valve stems to keep out dirt and moisture. Use only valve caps designed for the vehicle by GM. Tire Pressure Monitor System sensors could be damaged and would not be covered by the vehicle warranty.

## Tire Pressure for High-Speed Operation

**⚠ Warning**

Driving at high speeds, 160 km/h (100 mph) or higher, puts additional strain on tires. Sustained high-speed driving causes excessive heat buildup and can cause sudden tire failure. This could cause a crash, and you or others could be killed. Some high-speed rated tires require inflation pressure adjustment for high-speed operation. When speed limits and road conditions allow the vehicle to be driven at high speeds, make sure the tires are rated for high-speed operation, are in excellent condition, and are set to the correct cold tire inflation pressure for the vehicle load.

## Tire Pressure Monitor System

The Tire Pressure Monitor System (TPMS) uses radio and sensor technology to check tire pressure levels. The TPMS sensors monitor

NOT FOR RESALE



the air pressure in your tires and transmit tire pressure readings to a receiver located in the vehicle.

Each tire, including the spare (if provided), should be checked monthly when cold and inflated to the inflation pressure recommended by the vehicle manufacturer on the vehicle placard or tire inflation pressure label. (If your vehicle has tires of a different size than the size indicated on the vehicle placard or tire inflation pressure label, you should determine the proper tire inflation pressure for those tires.)

As an added safety feature, your vehicle has been equipped with a tire pressure monitoring system (TPMS) that illuminates a low tire pressure telltale when one or more of your tires is significantly under-inflated.

Accordingly, when the low tire pressure telltale illuminates, you should stop and check your tires as soon as possible, and inflate them to the proper pressure. Driving on a significantly under-inflated tire causes the tire to overheat and can lead to tire failure. Under-inflation also reduces fuel efficiency and tire tread life, and may affect the vehicle's handling and stopping ability.

Please note that the TPMS is not a substitute for proper tire maintenance, and it is the driver's responsibility to maintain correct tire pressure, even if under-inflation has not reached the level to trigger illumination of the TPMS low tire pressure telltale.

Your vehicle has also been equipped with a TPMS malfunction indicator to indicate when the system is not operating properly. The TPMS malfunction indicator is combined with the low tire pressure telltale. When the system detects a malfunction, the telltale will flash for approximately one minute and then remain continuously illuminated. This sequence will continue upon subsequent vehicle start-ups as long as the malfunction exists.

When the malfunction indicator is illuminated, the system may not be able to detect or signal low tire pressure as intended. TPMS malfunctions may occur for a variety of reasons, including the installation of replacement or alternate tires or wheels on the vehicle that prevent the TPMS from functioning properly. Always check the TPMS malfunction telltale after replacing one or more tires or wheels on your vehicle to ensure that the replacement or alternate tires and wheels allow the TPMS to continue to function properly.

See *Tire Pressure Monitor Operation* ⇨ *287*.

## Tire Pressure Monitor Operation

This vehicle may have a Tire Pressure Monitor System. The system is designed to warn the driver when a low tire pressure condition exists. Tire Pressure Monitor System sensors are mounted onto each tire and wheel assembly, excluding the spare tire and wheel assembly. The sensors monitor the air pressure in the tires and transmit the tire pressure readings to a receiver located in the vehicle.



NOT FOR RESALE



**Caution**

Tire sealant materials are not all the same. A non-approved tire sealant could damage the TPMS sensors. TPMS sensor damage caused by using an incorrect tire sealant is not covered by the vehicle warranty. Always use only the GM approved tire sealant available through your dealer or included in the vehicle.

When a low tire pressure condition is detected, the system illuminates the low tire pressure warning light located on the instrument cluster. If the warning light comes on, stop as soon as possible and inflate the tires to the recommended pressure shown on the Tire and Loading Information label. See *Vehicle Load Limits* ⇨ *172*.

A message to check the pressure in a specific tire displays in the Driver Information Center. The low tire pressure warning light and the Driver Information Center warning message come on each time the vehicle is started until the tires are inflated to the correct inflation pressure. Use the Driver Information Center or infotainment screen to view the tire pressure levels. For additional information and details about the Driver Information Center operation and displays, see *Driver Information Center (DIC)* ⇨ *111* or *Vehicle Status* ⇨ *113*.

The low tire pressure warning light may come on in cool weather when the vehicle is first started, and then turn off as the vehicle is driven. This could be an early indicator that the air pressure is getting low and needs to be inflated to the proper pressure.

A Tire and Loading Information label shows the size of the original equipment tires and the correct inflation pressure for the tires when they are cold. See *Vehicle Load Limits* ⇨ *172* for an example of the Tire and Loading Information label and its location. Also see *Tire Pressure* ⇨ *285*.

The Tire Pressure Monitor System can warn about a low tire pressure condition, but it does not replace normal tire maintenance. See *Tire Inspection* ⇨ *291*, *Tire Rotation* ⇨ *291*, and *Tires* ⇨ *280*.

### Tire Pressure Monitor System Malfunction Light and Message

The Tire Pressure Monitor System will not function properly if one or more of the system sensors are missing or inoperable. When the system detects a malfunction, the low tire pressure warning light flashes for about one minute and then stays on for the remainder of the time the vehicle is on. A Driver Information Center warning message also displays. The malfunction light and Driver Information Center warning message will come on each time the vehicle is started until the problem is corrected. Some of the conditions that can cause these to come on are:

- One of the road tires has been replaced with the spare tire. The spare tire does not have a sensor. The malfunction light and the Driver Information Center message should go off after the road tire is replaced and the sensor matching process is performed successfully. See "Tire Pressure Monitor System Sensor Matching Process" later in this section.
- The sensor matching process was not done or not completed successfully after rotating the tires. The malfunction light and the Driver Information Center message should go off after successfully completing the sensor matching process. See "Tire Pressure Monitor System Sensor Matching Process" later in this section.

NOT FOR RESALE



- One or more sensors are missing or damaged. The Driver Information Center message and the malfunction light should go off when the sensors are installed and the sensor matching process is performed successfully. See your dealer for service.
- Replacement tires or wheels do not match the original equipment tires or wheels. Tires and wheels other than those recommended could prevent the Tire Pressure Monitor System from functioning properly. See *Buying New Tires* ⇨ *293*.
- Operating electronic devices or being near facilities using radio wave frequencies similar to the Tire Pressure Monitor System could cause the sensors to malfunction.

If the system is not functioning properly, it cannot detect or signal a low tire pressure condition. See your dealer for service if the Tire Pressure Monitor System malfunction light and Driver Information Center message come on and stay on.

### Tire Fill Alert

**⚠ Warning**

Overinflating a tire could cause the tire to rupture and you or others could be injured. Do not exceed the maximum pressure listed on the tire sidewall. See *Tire Sidewall Labeling* ⇨ *281* and *Vehicle Load Limits* ⇨ *172*.

If equipped, this feature provides visual and audible alerts outside the vehicle to help when inflating an underinflated tire to the recommended cold tire pressure.

When the low tire pressure warning light comes on:

1. Park the vehicle in a safe, level place.
2. Place the vehicle in P (Park).
3. Set the parking brake.
4. Add air to the tire that is underinflated.

   The turn signal light closest to the tire being inflated with start flashing. When the recommended pressure is reached, the horn sounds once and the turn signal light will stop flashing and turn solid for several seconds before turning off.

Repeat these steps for all underinflated tires that have illuminated the low tire pressure warning light.

If the tire is overinflated by more than 35 kPa (5 psi), the horn will sound multiple times and the turn signal light will continue to flash for several seconds after filling stops.

To release and correct the pressure, while the turn signal light is still flashing, briefly press the center of the valve stem. When the recommended pressure is reached, the horn sounds once and the turn signal light will stop flashing and turn solid for several seconds before turning off.

If the turn signal light does not flash within 15 seconds after starting to inflate the tire, the tire fill alert has not been activated or is not working.

If the hazard warning flashers are on, the tire fill alert visual feedback will not work properly.

NOT FOR RESALE



The Tire Pressure Monitor System will not activate the tire fill alert properly under the following conditions:

- There is interference from an external device or transmitter.
- The air pressure from the inflation device is not sufficient to inflate the tire.
- There is a malfunction in the Tire Pressure Monitor System.
- There is a malfunction in the horn or turn signal lights.
- The sensor identification code is not registered to the system.
- The sensor battery is low.

If the tire fill alert does not operate due to system interference, move the vehicle about 1 m (3 ft) back or forward and try again. If the tire fill alert feature is not working, use a tire pressure gauge.

### Tire Pressure Monitor System Sensor Matching Process – Auto Learn

Each sensor has a unique identification code. The identification code needs to be matched to a new tire/wheel position after rotating the tires or replacing one or more of the system sensors. If equipped with Auto Learn, when a tire is installed, the vehicle must be stationary for about 20 minutes before the system recalculates. The relearn process takes up to 10 minutes, driving at a minimum speed of 20 km/h (12 mph). A dash (-) or pressure value will display in the Driver Information Center. See *Driver Information Center (DIC)* ⇨ *111*. A warning message displays in the Driver Information Center if a problem occurs during the relearn process.

### Tire Pressure Monitor System Sensor Matching Process – Manual Learn

Each sensor has a unique identification code. The identification code needs to be matched to a new tire/wheel position after rotating the vehicle's tires or replacing one or more of the system sensors. The sensor matching process should also be performed after replacing a spare tire with a road tire containing the Tire Pressure Monitor System sensor. After a successful matching process is completed, the malfunction light and the Driver Information Center message should turn off the next time the vehicle is started.

The sensors are matched to the tire/wheel positions, using a Tire Pressure Monitor System relearn tool, in the following order: driver side front tire, passenger side front tire, passenger side rear tire, and driver side rear tire. See your dealer for service or to purchase a relearn tool. You can also purchase a relearn tool at www.gmglobaltools.com, search on "TPMS Tool," or by calling 844-742-8471.

There are two minutes to match the first tire/wheel position, and five minutes overall to match all four tire/wheel positions. If it takes longer, the matching process stops and must be restarted.

The sensor matching process is:

1. Place the vehicle in P (Park).
2. Set the parking brake.
3. Turn the vehicle on or place the vehicle in Service Mode. See *Ignition Positions* ⇨ *176*.
4. Select the Vehicle Status icon from the infotainment apps screen.
5. Choose "Tire Pressure" or "Tires," then choose "Relearn Sensors."

NOT FOR RESALE



The horn sounds twice to signal the receiver is in relearn mode and the TIRE LEARNING ACTIVE message displays on the Driver Information Center or Infotainment screen.

6. Start with the driver side front tire.
7. Place the relearn tool against the tire sidewall, near the valve stem. Then press the button on the tool to activate the sensor.

   The horn sounds once to confirm that the sensor identification code has been matched to this tire and wheel position.
8. Proceed to the passenger side front tire, and repeat the procedure in Step 7.
9. Proceed to the passenger side rear tire, and repeat the procedure in Step 7.
10. Proceed to the driver side rear tire, and repeat the procedure in Step 7.

    The horn sounds twice to indicate the sensor identification code has been matched to the driver side rear tire, and the sensor matching process is no longer active. The TIRE LEARNING ACTIVE message turns off.
11. Turn the vehicle off.
12. Set all four tires to the recommended air pressure level as indicated on the Tire and Loading Information label.

## Tire Inspection

We recommend that the tires, including the spare tire, if the vehicle has one, be inspected for signs of wear or damage at least once a month.

Replace the tire if:

- The indicators at three or more places around the tire can be seen.
- There is cord or fabric showing through the tire's rubber.
- The tread or sidewall is cracked, cut, or snagged deep enough to show cord or fabric.
- The tire has a bump, bulge, or split.
- The tire has a puncture, cut, or other damage that cannot be repaired well because of the size or location of the damage.

## Tire Rotation

Tires should be rotated according to the interval specified in the Maintenance Schedule. See *Maintenance Schedule* ⇨ *321*.

When rotating the tires, inspect the brake pads for signs of wear. See *Brakes* ⇨ *262*.

Tires are rotated to achieve a more uniform wear for all tires. The first rotation is the most important.

Anytime unusual wear is noticed, rotate the tires as soon as possible, check for proper tire inflation pressure, and check for damaged tires or wheels. If the unusual wear continues after the rotation, check the wheel alignment. See *When It Is Time for New Tires* ⇨ *292* and *Wheel Replacement* ⇨ *296*.

NOT FOR RESALE



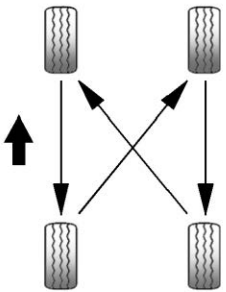

Use this rotation pattern when rotating the tires.

Do not include the compact spare tire in the tire rotation.

Adjust the front and rear tires to the recommended inflation pressure on the Tire and Loading Information label after the tires have been rotated. See *Tire Pressure* ⇨ *285* and *Vehicle Load Limits* ⇨ *172*.

Reset the Tire Pressure Monitor System. See *Tire Pressure Monitor Operation* ⇨ *287*.

**⚠ Warning**

Rust or dirt on a wheel, or on the parts to which it is fastened, can cause wheel nuts to become loose over time. The wheel could come off and cause a crash. When changing a wheel, remove any rust or dirt from places where the wheel attaches to the vehicle. In an emergency, a cloth or paper towel can be used; however, use a scraper or wire brush later to remove all rust or dirt.

**⚠ Warning**

Do not apply grease to the wheel mounting surface, wheel conical seats, or the wheel nuts or bolts. Grease applied to these areas could cause a wheel to become loose or come off, resulting in a crash.

Check that all wheel nuts are properly tightened. See "Wheel Nut Torque" under *Capacities and Specifications* ⇨ *329*, and "Removing the Flat Tire and Installing the Spare Tire" under *Tire Changing* ⇨ *298*.

Lightly coat the inner diameter of the wheel hub opening with wheel bearing grease after a wheel change or tire rotation to prevent corrosion or rust buildup.

## When It Is Time for New Tires

Factors, such as maintenance, temperatures, driving speeds, vehicle loading, and road conditions affect the wear rate of the tires.

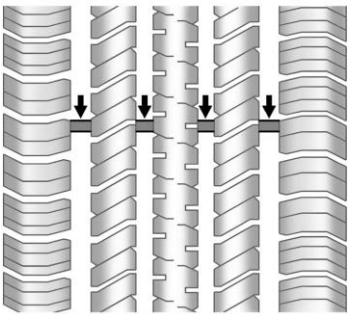

NOT FOR RESALE



Treadwear indicators are one way to tell when it is time for new tires. Treadwear indicators appear when the tires have only 1.6 mm (1/16 in) or less of tread remaining. See *Tire Inspection* ⇨ *291* and *Tire Rotation* ⇨ *291*.

The rubber in tires ages over time. This also applies to the spare tire, if the vehicle has one, even if it is never used. Multiple factors including temperatures, loading conditions, and inflation pressure maintenance affect how fast aging takes place. GM recommends that tires, including the spare if equipped, be replaced after six years, regardless of tread wear. To identify the age of a tire, use the tire manufacture date, which is the last four digits of the Department of Transportation (DOT) Tire Identification Number (TIN) molded into one side of the tire sidewall. The last four digits of the Tire Identification Number (TIN) indicate the tire manufactured date. The first two digits represent the week and the last two digits, the year. For example, the third week of the year 2020 would have a 4-digit Department of Transportation (DOT) date of 0320. Week 01 is the first full week (Sunday through Saturday) of each year.

### Vehicle Storage

Tires age when stored normally mounted on a parked vehicle. Park a vehicle that will be stored for at least a month in a cool, dry, clean area away from direct sunlight to slow aging. This area should be free of grease, gasoline, or other substances that can deteriorate rubber.

Parking for an extended period can cause flat spots on the tires that may result in vibrations while driving. When storing a vehicle for at least a month, remove the tires or raise the vehicle to reduce the weight from the tires.

## Buying New Tires

GM has developed and matched specific tires for the vehicle. The original equipment tires installed were designed to meet General Motors Tire Performance Criteria Specification (TPC Spec) system rating. When replacement tires are needed, GM strongly recommends buying tires with the same Tire Performance Criteria Specification (TPC Spec) rating.

GM's exclusive Tire Performance Criteria Specification (TPC Spec) system considers over a dozen critical specifications that impact the overall performance of the vehicle, including brake system performance, ride and handling, traction control, and tire pressure monitoring performance. GM's Tire Performance Criteria Specification (TPC Spec) number is molded onto the tire's sidewall near the tire size.

**⚠ Warning**

Tires could explode during improper service. Attempting to mount or dismount a tire could cause injury or death. Only your dealer or authorized tire service center should mount or dismount the tires.

**⚠ Warning**

Mixing tires of different sizes (other than those originally installed on the vehicle), brands, tread patterns, or types may cause loss of vehicle control,

(Continued)

NOT FOR RESALE



**Warning (Continued)**

resulting in a crash or other vehicle damage. Use the correct size, brand, and type of tire on all wheels.

**⚠ Warning**

Using bias-ply tires on the vehicle may cause the wheel rim flanges to develop cracks after many miles of driving. A tire and/or wheel could fail suddenly and cause a crash. Use only radial-ply tires with the wheels on the vehicle.

GM recommends replacing worn tires in complete sets of four. Uniform tread depth on all tires will help to maintain the performance of the vehicle. Braking and handling performance may be adversely affected if all the tires are not replaced at the same time. If proper rotation and maintenance have been done, all four tires should wear out at about the same time. However, if it is necessary to replace only one axle set of worn tires, place the new tires on the rear axle. See *Tire Rotation* ⇨ *291*.

If the vehicle tires must be replaced with a tire that does not have a Tire Performance Criteria Specification (TPC Spec) number, make sure they are the same size, load range, speed rating, and construction (radial) as the original tires.

Winter tires with the same speed rating as the original equipment tires may not be available for H, V, W, Y and ZR speed rated tires. Never exceed the winter tires' maximum speed capability when using winter tires with a lower speed rating.

The Tire and Loading Information label indicates the original equipment tires on the vehicle. See *Vehicle Load Limits* ⇨ *172*.

## Different Size Tires and Wheels

**⚠ Warning**

If different sized wheels are used, there may not be an acceptable level of performance and safety if tires not recommended for those wheels are selected. This increases the chance of a crash and serious injury. Only use GM specific wheel and tire systems developed for the vehicle, and have them properly installed by a GM certified technician.

If wheels or tires are installed that are a different size than the original equipment wheels and tires, vehicle performance, including its braking, ride and handling characteristics, stability, and resistance to rollover may be affected. If the vehicle has electronic systems such as antilock brakes, rollover airbags, traction control, electronic stability control, or all-wheel drive, the performance of these systems can also be affected.

See *Buying New Tires* ⇨ *293* and *Accessories and Modifications* ⇨ *250*.

NOT FOR RESALE



## Uniform Tire Quality Grading

The following information relates to the system developed by the United States National Highway Traffic Safety Administration (NHTSA), which grades tires by treadwear, traction, and temperature performance. This applies only to vehicles sold in the United States. The grades are molded on the sidewalls of most passenger car tires. The Uniform Tire Quality Grading (UTQG) system does not apply to deep tread, winter tires, compact spare tires, tires with nominal rim diameters of 10 to 12 inches (25 to 30 cm), or to some limited-production tires.

While the tires available on General Motors passenger cars and light trucks may vary with respect to these grades, they must also conform to federal safety requirements and additional General Motors Tire Performance Criteria (TPC) standards.

Quality grades can be found where applicable on the tire sidewall between tread shoulder and maximum section width. For example:

**Treadwear 200 Traction AA Temperature A**

All Passenger Car Tires Must Conform to Federal Safety Requirements In Addition To These Grades.

### Treadwear

The treadwear grade is a comparative rating based on the wear rate of the tire when tested under controlled conditions on a specified government test course. For example, a tire graded 150 would wear one and one-half (1½) times as well on the government course as a tire graded 100. The relative performance of tires depends upon the actual conditions of their use, however, and may depart significantly from the norm due to variations in driving habits, service practices and differences in road characteristics and climate.

### Traction

The traction grades, from highest to lowest, are AA, A, B, and C. Those grades represent the tire's ability to stop on wet pavement as measured under controlled conditions on specified government test surfaces of asphalt and concrete. A tire marked C may have poor traction performance. Warning: The traction grade assigned to this tire is based on straight-ahead braking traction tests, and does not include acceleration, cornering, hydroplaning, or peak traction characteristics.

### Temperature

The temperature grades are A (the highest), B, and C, representing the tire's resistance to the generation of heat and its ability to dissipate heat when tested under controlled conditions on a specified indoor laboratory test wheel. Sustained high temperature can cause the material of the tire to degenerate and reduce tire life, and excessive temperature can lead to sudden tire failure. The grade

NOT FOR RESALE



C corresponds to a level of performance which all passenger car tires must meet under the Federal Motor Safety Standard No. 109. Grades B and A represent higher levels of performance on the laboratory test wheel than the minimum required by law. Warning: The temperature grade for this tire is established for a tire that is properly inflated and not overloaded. Excessive speed, underinflation, or excessive loading, either separately or in combination, can cause heat buildup and possible tire failure.

## Wheel Alignment and Tire Balance

The tires and wheels were aligned and balanced at the factory to provide the longest tire life and best overall performance. Adjustments to wheel alignment and tire balancing are not necessary on a regular basis. Consider an alignment check if there is unusual tire wear or the vehicle is significantly pulling to one side or the other. Some slight pull to the left or right, depending on the slope of the road and/or other road surface variations such as troughs or ruts, is normal. If the vehicle is vibrating when driving on a smooth road, the tires and wheels may need to be rebalanced. See your dealer for proper diagnosis.

## Wheel Replacement

**⚠ Warning**

Using the wrong replacement wheels, wheel bolts, or wheel nuts can be dangerous. It could affect the braking and handling of the vehicle. Tires can lose air and cause loss of control, resulting in a crash. Always use the correct wheel, wheel bolts, and wheel nuts for replacement.

**⚠ Warning**

Replacing a wheel with a used one is dangerous. How it has been used or how far it has been driven may be unknown. It could fail suddenly and cause a crash. When replacing wheels, use a new GM original equipment wheel.

**Caution**

The wrong wheel can also cause problems with bearing life, brake cooling, speedometer or odometer calibration, headlight aim, bumper height, vehicle ground clearance, and tire or tire chain clearance to the body and chassis.

Replace any wheel that is bent, cracked, or badly rusted or corroded. If wheel nuts keep coming loose, the wheel, wheel bolts, and wheel nuts should be replaced. If the wheel leaks air, replace it. Some aluminum wheels can be repaired. See your dealer if any of these conditions exist.

Your dealer will know the kind of wheel that is needed.

Each new wheel should have the same load-carrying capacity, diameter, width, offset, and be mounted the same way as the one it replaces.

Replace wheels, wheel bolts, wheel nuts, or Tire Pressure Monitor System sensors with new GM original equipment parts.

NOT FOR RESALE



## Tire Chains and Other Traction Devices

**Warning**

Do not use tire chains or textile/fabric traction devices, such as snow socks. There is not enough clearance. Tire chains or textile/fabric traction devices used on a vehicle without the proper amount of clearance can cause damage to the brakes, suspension, or other vehicle parts. The area damaged by the tire chains or textile/fabric traction devices could cause loss of control and a crash. Use another type of traction device only if its manufacturer recommends it for the vehicle's tire size combination and road conditions. Follow that manufacturer's instructions. To avoid vehicle damage, drive slowly and readjust or remove the traction device if it contacts the vehicle. Do not spin the wheels. If traction devices are used, install them on the tires of the front axle only.

## If a Tire Goes Flat

**Warning**

Driving on a flat tire will cause permanent damage to the tire. Re-inflating a tire after it has been driven on while severely underinflated or flat may cause a blowout and a serious crash. Never attempt to re-inflate a tire that has been driven on while severely underinflated or flat. Have your dealer or an authorized tire service center repair or replace the flat tire as soon as possible.

It is unusual for a tire to blow out while driving, especially if the tires are maintained properly. It is much more likely for a tire to experience a slow leak. See *Tires* ⇨ *280*.

In the event of a blowout, follow these tips:

- A front tire blowout causes the vehicle to pull toward the side of the flat. Take your foot off the accelerator pedal and grip the steering wheel firmly. Steer to maintain lane position, and then gently brake to a stop.
- A rear blowout, particularly on a curve, acts much like a skid and may require the same correction as used in a skid. Stop pressing the accelerator pedal and steer to straighten the vehicle. It may be very bumpy and noisy. Gently brake to a stop.

If a tire goes flat, avoid further tire and wheel damage by driving slowly to a level place, well off the road, if possible. Turn on the hazard warning flashers. See *Hazard Warning Flashers* ⇨ *124*.

**Warning**

Lifting a vehicle and getting under it to do maintenance or repairs is dangerous without the appropriate safety equipment and training. If a jack is provided with the vehicle, it is designed only for changing a flat tire. If it is used for anything else, you or others could be badly injured or killed if the vehicle slips off the jack. If a jack is provided with the vehicle, only use it for changing a flat tire.

If your vehicle is loaded at or near maximum cargo capacity, it may be difficult to fit the jack under the vehicle due to the environment

NOT FOR RESALE



(shoulder slope, road debris, etc.). Removal of some weight may improve the ability to fit the jack under the vehicle at the correct jacking location.

**⚠ Warning**

Changing a tire can be dangerous. The vehicle can slip off the jack and roll over or fall causing injury or death. Find a level place to change the tire. To help prevent the vehicle from moving:

1. Set the parking brake firmly.
2. Put the vehicle in P (Park).
3. Turn the vehicle off and do not restart the vehicle while it is raised.
4. Do not allow passengers to remain in the vehicle.
5. Place wheel blocks, if equipped, on both sides of the tire at the opposite corner of the tire being changed.

To safely change a flat tire:

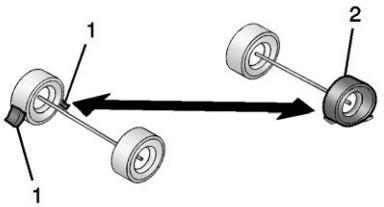


1. If equipped, place wheel blocks (1), as shown, to prevent the vehicle from moving.
2. Use the jacking equipment to change the flat tire (2). See *Tire Changing* ⇨ *298*.

## Tire Changing

### Removing the Spare Tire and Tools

To access the spare tire and tools:

1. Open the liftgate. See *Liftgate* ⇨ *18*.



2. Lift the load floor.



NOT FOR RESALE



3. Remove the four wing nuts, then remove the cargo management system. See *Cargo Management System* ⇨ *85*.

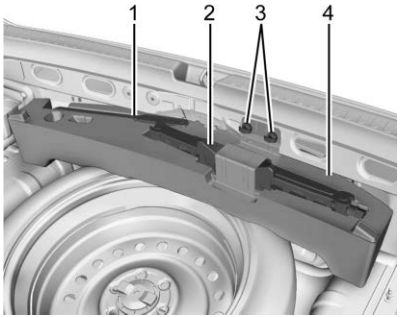


4. Remove the wheel wrench (1) from the tool tray.
5. If equipped, remove the wing nuts and bracket (3), then remove the tool tray (4).

   If the wing nuts are too tight, use the wheel wrench end to help loosen them.
6. Remove the jack (2) from the tool tray. Place the jack and wheel wrench next to the tire being changed.

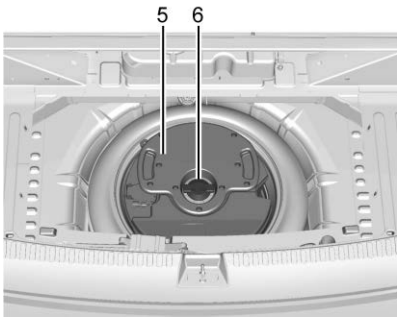


7. If the vehicle is equipped with a subwoofer (5), remove the center wing nut (6), then remove the subwoofer and set it aside. Do not disconnect the wiring harness.

   Fold the third row seats completely flat to allow the subwoofer a surface safely out of the way for the removal of the spare tire. See *Third Row Seats* ⇨ *44*.
8. Remove the spare tire and place it next to the tire being changed.

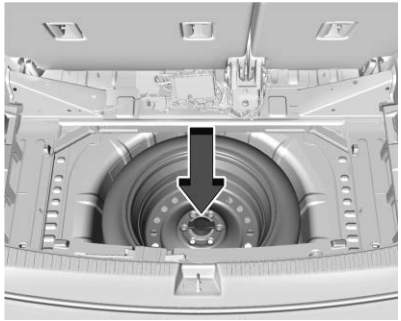

9. If the vehicle is not equipped with a subwoofer, remove the center wing nut, then remove the spare tire and place it next to the tire being changed.

### Removing the Flat Tire and Installing the Spare Tire

1. Do a safety check before proceeding. See *If a Tire Goes Flat* ⇨ *297*.

NOT FOR RESALE





2. Turn the wheel wrench counterclockwise to loosen all the wheel nuts, but do not remove them yet.
3. Place the jack near the flat tire.

**Caution**

Make sure that the jack lift head is in the correct position or you may damage your vehicle. The repairs would not be covered by your warranty.

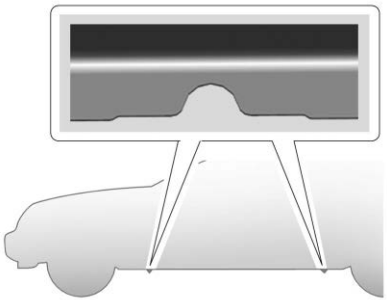

4. Position the jack lift head at the jack location nearest the flat tire.

   The jacking location is indicated by a half circle notch in the metal flange. The jack must not be used in any other position.

**⚠ Warning**

Getting under a vehicle when it is lifted on a jack is dangerous. If the vehicle slips off the jack, you could be badly injured or killed. Never get under a vehicle when it is supported only by a jack.

**⚠ Warning**

Raising the vehicle with the jack improperly positioned can damage the vehicle and even make the vehicle fall. To help avoid personal injury and vehicle damage, be sure to fit the jack lift head into the proper location before raising the vehicle.

**⚠ Warning**

Lifting a vehicle and getting under it to do maintenance or repairs is dangerous without the appropriate safety equipment and training. If a jack is provided with the vehicle, it is designed only for changing a flat tire. If it is used for anything else, you or others could be badly injured or killed if the vehicle slips off the jack. If a jack is provided with the vehicle, only use it for changing a flat tire.

NOT FOR RESALE



**Caution**

Using a jack to raise the vehicle without positioning it correctly could damage your vehicle. When raising your vehicle on a jack, be sure to position it correctly under the frame and avoid contact with the plastic molding.

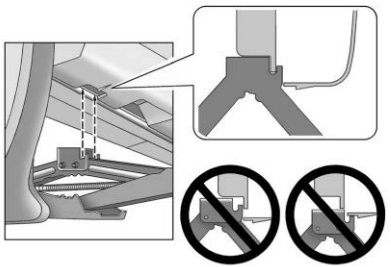

5. Turn the wheel wrench clockwise to raise the jack lift head until the slots in the jack head fit into the metal flange behind the cut out on the plastic molding. Do not raise the vehicle yet.
6. Put the compact spare tire near you.
7. Turn the wrench clockwise in the jack to raise the vehicle. Raise the vehicle far enough off the ground so that there is enough room for the spare tire to fit under the wheel well.

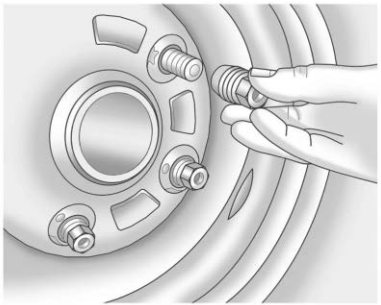

8. Remove all of the wheel nuts.
9. Remove the flat tire.

**⚠ Warning**

Rust or dirt on a wheel, or on the parts to which it is fastened, can cause wheel nuts to become loose over time. The

(Continued)

**Warning (Continued)**

wheel could come off and cause a crash. When changing a wheel, remove any rust or dirt from places where the wheel attaches to the vehicle. In an emergency, a cloth or paper towel can be used; however, use a scraper or wire brush later to remove all rust or dirt.

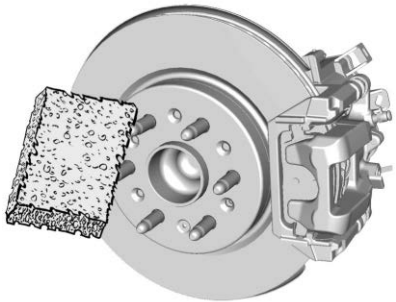

10. Remove any rust or dirt from the wheel bolts, mounting surfaces, and spare wheel.
11. Place the compact spare tire on the wheel-mounting surface.

NOT FOR RESALE



**⚠ Warning**

Never use oil or grease on bolts or nuts because the nuts might come loose. The vehicle's wheel could fall off, causing a crash.

12. Reinstall the wheel nuts. Tighten each nut by hand until the wheel is held against the hub.
13. Lower the vehicle by turning the jack handle counterclockwise.

**⚠ Warning**

Wheel nuts that are improperly or incorrectly tightened can cause the wheels to become loose or come off. The wheel nuts should be tightened with a torque wrench to the proper torque specification after replacing. Follow the torque specification supplied by the aftermarket manufacturer when using accessory locking wheel nuts. See *Capacities and Specifications* ⇨ *329* for original equipment wheel nut torque specifications.

**Caution**

Improperly tightened wheel nuts can lead to brake pulsation and rotor damage. To avoid expensive brake repairs, evenly tighten the wheel nuts in the proper sequence and to the proper torque specification. See *Capacities and Specifications* ⇨ *329* for the wheel nut torque specification.

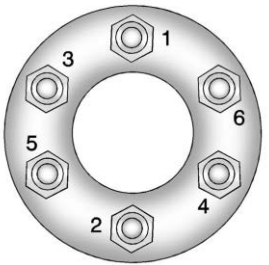


14. Tighten the wheel nuts firmly in a crisscross sequence, as shown.
15. Lower the jack all the way and remove the jack from under the vehicle.
16. Tighten the wheel nuts firmly with the wheel wrench.

**Caution**

Wheel covers will not fit on the vehicle's compact spare. If you try to put a wheel cover on the compact spare, the cover or the spare could be damaged.

**⚠ Warning**

Storing a jack, a tire, or other equipment in the passenger compartment of the vehicle could cause injury. In a sudden stop or collision, loose equipment could strike someone. Store all these in the proper place.

NOT FOR RESALE



## Storing the Flat Tire

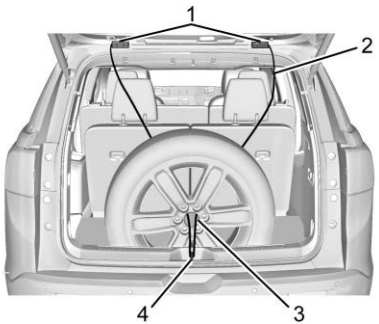


1. Liftgate Hinges
2. Cable
3. Center of the Wheel
4. Door Striker

To store the flat tire:

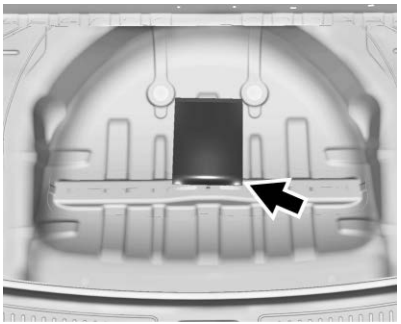

1. Remove the cable package from under the spare tire.
2. Remove the small cap by tapping the back of the cap with the extension of the shaft, if the vehicle has aluminum wheels.
3. Put the flat tire in the rear storage area with the valve stem facing the rear of the vehicle.
4. Pull the cable through the door striker and the center of the wheel.

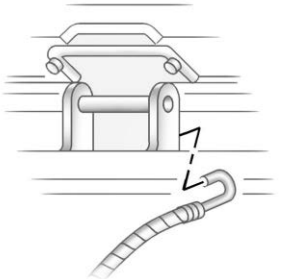

5. Lower the liftgate enough to be able to hook the cable onto the outside portion of the liftgate hinges.
6. Hook the other end of the cable onto the outside portion of the liftgate hinge on the other side of the vehicle.
7. Pull on the cable to make sure it is secure.

NOT FOR RESALE



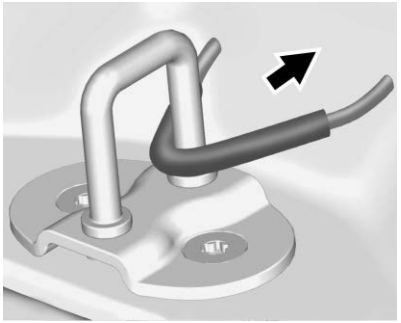

8. Make sure the metal tube is centered at the striker. Push the tube toward the front of the vehicle.
9. Close the liftgate and make sure it is fully latched.

The compact spare is for temporary use only. Replace the compact spare tire with a full-size tire as soon as you can.

### Storing the Compact Spare Tire and Tools

To store the spare tire and tools:

1. Open the liftgate. See *Liftgate* ⇨ *18*.
2. Lift the load floor.
3. Remove the cargo management system.
4. Put back the spare tire and all tools as they were stored in the rear storage compartment.
5. Install the cargo management system and load floor.

The compact spare is for temporary use only. Replace the compact spare tire with a full-size tire as soon as you can.

## Compact Spare Tire

**⚠ Warning**

Driving with more than one compact spare tire at a time could result in loss of braking and handling. This could lead to a crash and you or others could be injured. Use only one compact spare tire at a time.

**Caution**

When the compact spare is installed, do not take the vehicle through an automatic car wash with guide rails. The compact spare can get caught on the rails which can damage the tire, wheel, and other parts of the vehicle.

**Caution**

Tire chains will not fit the compact spare. Using them can damage the vehicle and the chains. Do not use tire chains on the compact spare.

If this vehicle has a compact spare tire, it was fully inflated when new; however, it can lose air over time. Check the inflation pressure regularly. It should be 420 kPa (60 psi).

Stop as soon as possible and check that the spare tire is correctly inflated after being installed on the vehicle. The compact spare tire is designed for temporary use only. The vehicle will perform differently with the spare tire installed and it is recommended that the vehicle speed be limited to 80 km/h (50 mph). To conserve the tread of the spare tire, have the standard tire repaired or replaced as soon as convenient and return the spare tire to the storage area.

When using a compact spare tire, the All-Wheel Drive (AWD), if equipped, Antilock Brake System (ABS), and Traction Control System (TCS) may engage until the spare

NOT FOR RESALE



tire is recognized by the vehicle, especially on slippery roads. Adjust driving to reduce possible wheel slip.

Do not use the compact spare on other vehicles.

Do not mix the compact spare tire or wheel with other wheels or tires. They will not fit. Keep the spare tire and its wheel together.

# Jump Starting

## Jump Starting - North America

**Warning**

Do not attempt to jump-start the battery if it is overheating, venting, emitting hissing sounds, smoking, or shows signs of damage such as swelling or a damaged case. The battery may cause burns and release hazardous gases. Keep away from the vehicle and contact your dealer.

For more information about the vehicle battery, see *Battery - North America* ⇨ *265*.

If the vehicle battery is dead, follow these steps to safely use another vehicle and jumper cables to start your vehicle.

**Warning**

**WARNING:** Battery posts, terminals and related accessories can expose you to chemicals including lead and lead compounds, which are known to the State of California to cause cancer and birth defects or other reproductive harm. Wash hands after handling. For more information go to www.P65Warnings.ca.gov.

See *California Proposition 65 Warning* ⇨ *1*.

**Warning**

Batteries can hurt you. They can be dangerous because:

- They contain acid that can burn you.
- They contain gas that can explode or ignite.
- They contain enough electricity to burn you.

If you do not follow these steps exactly, some or all of these things can hurt you.

**Caution**

Ignoring these steps could result in costly damage to the vehicle that would not be covered by the vehicle warranty. Trying to start the vehicle by pushing or pulling it will not work, and it could damage the vehicle.

**Caution**

If the jumper cables are connected or removed in the wrong order, electrical shorting may occur and damage the vehicle. The repairs would not be covered by the vehicle warranty. Always connect and remove the jumper cables in the correct order, making sure that the cables do not touch each other or other metal.

NOT FOR RESALE



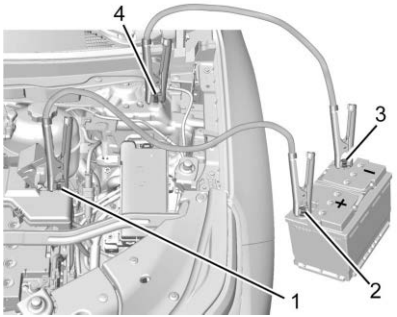


**Connection Points and Sequence**

1. Discharged Battery Positive (+) Terminal
2. Good Battery Positive (+) Terminal
3. Good Battery Negative (–) Terminal
4. Discharged Battery Negative (–) Grounding Point

The discharged battery positive (+) terminal and the discharged battery negative (–) grounding point are on the driver side of the vehicle.

The good battery positive (+) terminal and the good battery negative (–) terminal are on the battery of the vehicle providing the jump start.

The discharged battery positive (+) terminal is under a cover. Open the cover to expose the terminal.

**Caution**

If the other vehicle does not have a 12-volt system with a negative ground, both vehicles can be damaged. Only use a vehicle that has a 12-volt system with a negative ground for jump starting.

1. Check the other vehicle. It must have a 12-volt battery with a negative ground system.
2. Position the two vehicles so that they are not touching.
3. Set the parking brake firmly and put the shift lever in P (Park) with an automatic transmission, or N (Neutral) with a manual transmission. See *Automatic Transmission* ⇨ *181*.

**Caution**

If any accessories are left on or plugged in during the jump starting procedure, they could be damaged. The repairs would not be covered by the vehicle warranty. Whenever possible, turn off or unplug all accessories on either vehicle when jump starting.

4. Turn the ignition off. Turn off all lights and accessories in both vehicles, except the hazard warning flashers if needed.

**⚠ Warning**

An electric fan can start up even when the engine is not running and can injure you. Keep hands, clothing, and tools away from any underhood electric fan.

NOT FOR RESALE



**⚠ Warning**

Using a match near a battery can cause battery gas to explode. People have been hurt doing this, and some have been blinded. Use a flashlight if you need more light.

Battery fluid contains acid that can burn you. Do not get it on you. If you accidentally get it in your eyes or on your skin, flush the place with water and get medical help immediately.

**⚠ Warning**

Fans or other moving engine parts can injure you badly. Keep your hands away from moving parts once the engine is running.

**⚠ Warning**

Always inspect jumper cables prior to use. Jumper cables with loose or missing insulation could shock you or cause vehicle damage. Do not use jumper cables that appear damaged.

5. Check that the jumper cables do not have loose or missing insulation.
6. Connect one end of the red positive (+) cable to the discharged battery positive (+) terminal.
7. Connect the other end of the red positive (+) cable to the good battery positive (+) terminal.
8. Connect one end of the black negative (–) cable to the good battery negative (–) terminal.
9. Connect the other end of the black negative (–) cable to the discharged battery negative (–) grounding point.
10. Start the engine in the vehicle with the good battery and run the engine at idle speed for at least four minutes.
11. Try to start the vehicle that had the dead battery. If it will not start after a few tries, have the vehicle serviced.

**Jumper Cable Removal**

To remove the jumper cables, reverse Steps 6–9 in exact order.

After starting the disabled vehicle and removing the jumper cables, allow it to idle for several minutes.

# Towing the Vehicle

## Transporting a Disabled Vehicle

**Caution**

Incorrectly transporting a disabled vehicle may cause damage to the vehicle. Use proper tire straps to secure the vehicle to the flatbed tow truck. Do not strap or hook to any frame, underbody, or suspension component not specified below. Do not move vehicles with drive axle tires on the ground. Damage is not covered by the vehicle warranty.

**Caution**

The vehicle may be equipped with an Electric Parking Brake (EPB) and/or an electronic shifter. In the event of a loss of 12-volt battery power, the EPB cannot

(Continued)

NOT FOR RESALE



**Caution (Continued)**

be released, and the vehicle cannot be shifted to N (Neutral). Tire skates or dollies must be used under the non-rolling tires to prevent damage while loading/unloading the vehicle. Dragging the vehicle will cause damage not covered by the vehicle warranty.

Contact a professional towing service to transport a disabled vehicle. GM recommends a flatbed tow truck to transport a disabled vehicle. Use ramps to help reduce approach angles, if necessary.

The vehicle must be in N (Neutral) and the electric parking brake must be released when loading the vehicle onto a flatbed tow truck.

- If the vehicle is equipped with car wash mode and has 12-volt battery power, see "Car Wash Mode" under *Automatic Transmission* ⇨ *181* to place the vehicle in N (Neutral).
- If the 12-volt battery is dead and/or the engine will not start, the vehicle will not move. Try to jump start the vehicle. See *Jump Starting - North America* ⇨ *305* and if the jump start is successful, retry the "Car Wash Mode" procedure.
- If jump starting is unsuccessful, the vehicle will not move. Tire skates or dollies must be used under the non-rolling tires to prevent vehicle damage.

### Front Attachment Points

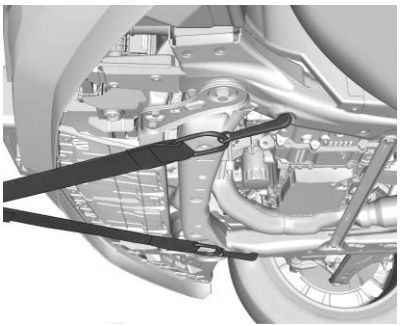

The vehicle is equipped with specific attachment points to be used by the towing provider. These holes may be used to pull the vehicle from a flat road surface onto the flatbed tow truck.

## Recreational Vehicle Towing

**⚠ Warning**

Never attempt to tow a vehicle with the battery connected. Follow every step in this section to avoid unintended responses from steering, braking, suspension, or other vehicle systems.

Recreational vehicle towing means towing the vehicle behind another vehicle, such as behind a motor home. The two most common types of recreational vehicle towing are known as dinghy towing and dolly towing. Dinghy towing is towing the vehicle with all four wheels on the ground. Dolly towing is towing the vehicle with two wheels on the ground and two wheels up on a device known as a dolly.

Here are some important things to consider before recreational vehicle towing:

- Become familiar with the local laws that apply to recreational vehicle towing. These laws may vary by region.
- The towing capacity of the towing vehicle. Be sure to read the tow vehicle manufacturer's recommendations.

NOT FOR RESALE



- How far the vehicle will be towed. Some vehicles have restrictions on how far and how long they can be towed.
- The proper towing equipment. See your dealer or trailering professional for additional advice and equipment recommendations.
- If the vehicle is ready to be towed. Just as preparing the vehicle for a long trip, make sure the vehicle is prepared to be towed.

**Caution**

Use of a shield mounted in front of the vehicle grille could restrict airflow and cause damage to the transmission. The repairs would not be covered by the vehicle warranty. If using a shield, only use one that attaches to the towing vehicle.

**Caution**

Do not install tow hardware that interferes with the lower shutters. Shutters cannot be removed. Removal of the shutters can cause damage to the engine that will not

(Continued)

**Caution (Continued)**

be covered by the vehicle warranty. If using tow hardware, only install hardware that does not require the removal of the shutters.

### Dinghy Towing

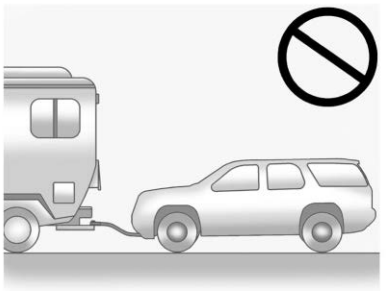

**Caution**

If the vehicle is towed with all four wheels on the ground, the drivetrain components could be damaged. The repairs would not

(Continued)

**Caution (Continued)**

be covered by the vehicle warranty. Do not tow the vehicle with all four wheels on the ground.

The vehicle is neither designed nor intended to be towed with all four wheels on the ground. If the vehicle must be towed, a dolly should be used. See the following information on dolly towing.

### Dolly Towing

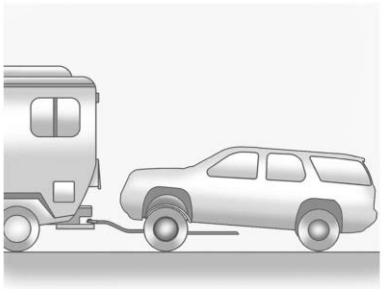

NOT FOR RESALE



### Driving onto a Dolly

1. Park the vehicle on level ground in front of the dolly and turn the vehicle off.
2. Make sure the parking brake is released.
3. Press and hold ENGINE START/STOP with your foot off the brake for five seconds.
4. Hold the brake pedal and press the parking brake switch for 15 seconds until the service parking brake light flashes.
5. While the service parking brake light is still flashing, remove your foot from the brake pedal and release the parking brake switch.
6. Immediately press and release the parking brake switch again while the service park brake light is still flashing.
7. Start the vehicle and drive onto the dolly.
8. Place the vehicle in P (Park).
9. Turn off the vehicle.
10. Open the hood.
11. Exit the vehicle and secure the vehicle onto the dolly.
12. Disconnect the negative (–) terminal connector from the 12-volt battery.
13. Close the hood of the vehicle.

### Removing the Vehicle from a Dolly

1. Make sure the vehicle is secured to the dolly.
2. Open the door and open the hood of the vehicle.
3. Connect the negative (–) terminal connector from the 12-volt battery.
4. Press and hold ENGINE START/STOP with your foot off the brake for five seconds.
5. Hold the brake pedal and press the parking brake switch for five seconds until the parking brake light flashes.
6. Turn the vehicle off.
7. Unsecure the vehicle and remove it from the dolly.

### Towing the Vehicle from the Rear

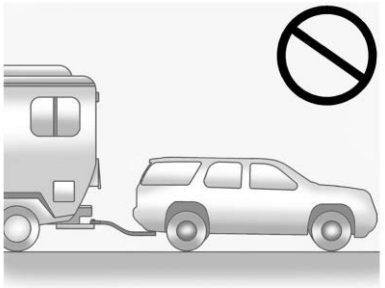

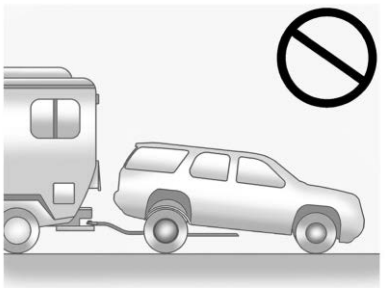

NOT FOR RESALE



**Caution**

Towing the vehicle from the rear could damage it. Also, repairs would not be covered by the vehicle warranty. Never have the vehicle towed from the rear.

Do not tow the vehicle from the rear.

# Appearance Care

## Exterior Care

### Locks

Locks are lubricated at the factory. Only use a de-icing agent when absolutely necessary, and have the locks greased after using the de-icing agent. See *Recommended Fluids and Lubricants* ⇨ *326*.

### Washing the Vehicle

**⚠ Warning**

Do not power wash any part of the vehicle's interior, including the vinyl floor covering. This could damage safety and other systems in the vehicle, which would not be covered by the vehicle warranty.

**Caution**

Do not use petroleum-based, acidic, or abrasive cleaning agents as they can damage the vehicle's paint, metal, or plastic parts. If damage occurs, it would not be covered by the vehicle warranty. Approved cleaning products can be obtained from your dealer. Follow all manufacturer directions regarding correct product usage, necessary safety precautions, and appropriate disposal of any vehicle care product.

To preserve the exterior finish, wash it often and out of direct sunlight.

Take care to wash materials such as calcium chloride and other salts, ice melting agents, road oil and tar, tree sap, bird droppings, chemicals from industrial chimneys, etc. from the finish as soon as possible. These materials can damage the finish if they remain on painted surfaces.

#### Automatic Car Wash

When using an automatic car wash, follow the posted instructions carefully.

Before entering the wash:

- Close all windows and sunroof, if equipped.
- Turn off the windshield wipers and rear window wipers, if equipped.
- Remove any accessories that can be damaged or interfere with car wash equipment.
- Close the fuel door.

During the wash:

- If using an automatic car wash with a conveyor system, drive onto the conveyor system, then put the vehicle in N (Neutral).

NOT FOR RESALE



### Hand Wash

**Caution**

Take care when washing or drying near vehicle emblems to prevent damage. Damage to emblems may not be covered under vehicle warranty.

Thoroughly rinse all cleaning agents before and after hand washing. Agents left to dry on the exterior may stain the finish.

Dry the exterior finish with a soft, clean chamois or an all-cotton towel to avoid surface scratches and water spotting.

### Cleaning Underhood Components

**Caution**

Do not power wash any component under the hood that has this  symbol.

This could cause damage that would not be covered by the vehicle warranty.

Only use water when cleaning underhood components. Solvents and aggressive cleaners can be harmful.

**Caution**

Avoid using high-pressure washers closer than 30 cm (12 in) to the surface of the vehicle. Use of power washers exceeding 8,000 kPa (1,160 psi) can result in damage or removal of paint and decals.

If you choose to use a power washer, use care when handling and follow these criteria:

- Keep water pressure below 8,000 kPa (1,160 PSI).
- Keep water temperature below 80 °C (180 °F).
- Use a spray nozzle with a 40-degree-wide or greater angle spray pattern.
- Keep the nozzle at least 30 cm (12 in) away from all surfaces.

### Finish Care

**Caution**

Do not apply waxes or polishes to uncoated plastic, vinyl, rubber, decals, simulated wood, flat paint, or metal mesh grilles as damage can occur.

**Caution**

Machine compounding or aggressive polishing on a basecoat/clearcoat paint finish may damage it. Use only non-abrasive waxes and polishes that are made for a basecoat/clearcoat paint finish on the vehicle.

Performing occasional hand waxing or mild polishing removes residue from the paint finish. Do not apply aftermarket clearcoat sealant/wax. See your dealer for approved cleaning products.

Avoid rubbing the finish vigorously. This can create bright spots and an uneven appearance on the finish.

NOT FOR RESALE



Airborne pollutants can cause blotchy, ring-shaped discolorations, and small, irregular dark spots etched into the paint surface. If painted surfaces are damaged, see your dealer to have the damage assessed and repaired.

To keep paint finish looking new, keep the vehicle garaged or covered whenever possible.

**Protecting Exterior Bright Metal Moldings**

| Caution |
| --- |
| Failure to clean and protect the bright metal moldings can result in a hazy white finish or pitting. This damage would not be covered by the vehicle warranty. |

The bright metal moldings on the vehicle are made of aluminum, chrome, or stainless steel. To prevent damage, always follow these cleaning instructions:

- Be sure the molding is cool to the touch before applying any cleaning solution.
- Use only approved cleaning solutions for aluminum, chrome, or stainless steel. Some cleaners are highly acidic or contain alkaline substances and can damage the moldings.
- Always dilute a concentrated cleaner according to the manufacturer's instructions.
- Do not use cleaners that are not intended for automotive use.
- Use a nonabrasive wax on the vehicle after washing to protect and extend the molding finish.

### Cleaning Exterior Lights/Lenses, Emblems, Decals, and Stripes

| Caution |
| --- |
| Failure to clean lights properly can cause damage to the light cover that would not be covered by the vehicle warranty. |

| Caution |
| --- |
| Using wax on low gloss black finish stripes can increase the gloss level and create a non-uniform finish. Clean low gloss stripes with soap and water only. |

Use lukewarm or cold water, a soft cloth, and a car washing soap to clean exterior lights, lenses, emblems, decals, and stripes. Follow the instructions under "Washing the Vehicle" previously in this section.

Light covers are made of plastic and may have a UV protective coating. Do not clean or wipe them while they are dry. This can cause scratches to the surface of the light cover.

Do not use any of the following on light covers:

- Abrasive or caustic agents.
- Washer fluids and other cleaning agents in higher concentrations than suggested by the manufacturer.
- Solvents, alcohols, fuels, or other harsh cleaners.
- Ice scrapers or other hard items.
- Aftermarket appearance caps or covers while the lights are illuminated. Excessive heat may be generated and can damage the covers.

### Air Intakes

Clear debris from the air intakes between the hood and windshield when washing the vehicle.

NOT FOR RESALE



### Shutter System



This vehicle may have a shutter system that automatically closes the frontal cooling opening. This system is designed to help improve fuel economy. If the shutter system is blocked, the Malfunction Indicator Light may turn on. Ensure the shutter system is clear of any visible debris, snow, or ice. If the Malfunction Indicator Light stays on after cleaning the shutter system, see *Malfunction Indicator Light (Check Engine Light)* ⇨ *102*.

### Windshield and Wiper Blades

Clean the outside of the windshield with glass cleaner.

Clean rubber wiper blades using a lint-free cloth or paper towel soaked with windshield washer fluid or a mild detergent. Wash the windshield thoroughly when cleaning the blades. Bugs, road grime, sap, and a buildup of vehicle wash/wax treatments may cause wiper streaking.

Extreme dusty conditions, sand, salt, heat, sun, snow, and ice can cause damage. Replace the wiper blades when they are worn or damaged.

### Weatherstrips

Apply weatherstrip lubricant once a year to help weatherstrips last longer, seal better, and not stick or squeak. Hot, dry climates may require more frequent application.

Use a clean cloth to remove any black marks caused by weatherstrips.

### Tires, Wheels, and Wheel Trim

**Caution**

Using petroleum-based tire dressing products on the vehicle may damage the paint finish and/or tires. When applying

(Continued)

**Caution (Continued)**

a tire dressing, always wipe off any overspray from all painted surfaces on the vehicle.

Use a stiff brush with tire cleaner to clean the tires.

**Caution**

To avoid surface damage on wheels and wheel trim, do not use strong soaps, chemicals, abrasive polishes, cleaners, or brushes. Use only GM approved cleaners. Do not drive the vehicle through an automatic car wash that uses silicon carbide tire/wheel cleaning brushes. Damage could occur and the repairs would not be covered by the vehicle warranty.

Use a soft, clean cloth with mild soap and water to clean the wheels. After rinsing thoroughly with clean water, dry with a soft, clean towel.

NOT FOR RESALE



### Body Component Lubrication

Lubricate all key lock cylinders, hood hinges, liftgate hinges, and the steel fuel door hinge unless the components are plastic. See *Recommended Fluids and Lubricants* ⇨ *326*.

### Underbody Maintenance

Every six months, flush any corrosive materials from the underbody with plain water. Take care to thoroughly clean any areas where mud and other debris can collect. If equipped, extend power assist steps and use a high pressure wash to clean all joints and gaps.

Do not directly power wash the transfer case and/or front/rear axle output seals. High pressure water get into the seals and contaminate the fluid. Contaminated fluid decreases the life of the transfer case and/or axles and should be replaced.

### Sheet Metal Damage

If the vehicle is damaged and requires sheet metal repair or replacement, use original manufacturer replacement parts which provide corrosion protection and maintain the vehicle warranty.

If original manufacturer replacement parts are not used, make sure the body repair shop applies anti-corrosion material to parts repaired or replaced.

### Finish Damage

Quickly repair minor chips and scratches with touch-up materials available from your dealer to avoid corrosion. See your dealer's body and paint shop to correct larger areas of finish damage.

## Interior Care

To prevent dirt particle abrasions to the interior, regularly clean it. Before using cleaners, read and follow all safety instructions on the label. While cleaning the interior, open the doors and windows for proper ventilation. Newspapers or dark garments can transfer color to the interior.

**Caution**

Immediately remove cleaners, hand lotions, sunscreen, and insect repellent from all interior surfaces or permanent damage may result.

**Caution**

Use cleaners specifically designed for the surfaces being cleaned to prevent permanent damage to the vehicle. Apply all cleaners directly to a cleaning cloth. Do not spray cleaners on any switches or controls.

When using liquid soap cleaners, follow the directions on the specific cleaner or soap solution for dilution instructions.

**Caution**

To prevent damage:

- Never use a razor or any other sharp object to remove soil from any interior surface.
- Never use a brush with stiff bristles.
- Never rub any surface aggressively or with too much pressure.
- Do not power wash any part of the interior or allow any electrical components or wiring to get

(Continued)

NOT FOR RESALE



**Caution (Continued)**

wet. Interior surfaces may contain components or wiring that are not visible.

- Do not use laundry detergents or dishwashing soaps with degreasers. Do not use solutions that contain strong or caustic soap.
- Do not heavily saturate the upholstery when cleaning.
- Do not use solvents or cleaners containing solvents.
- Do not use disinfecting wipes that are scented or contain bleach. Do not use wipes or cleaners that show a color transfer to the wipe or change the appearance of the interior surface when used.
- Do not use scented or gel-type hand sanitizers. If hand sanitizer comes in contact with interior surfaces of the vehicle, blot immediately and clean with a soft cloth dampened with a mild soap and water solution.

### Interior Glass

**Caution**

To prevent scratching, never use abrasive cleaners on automotive glass. Abrasive cleaners or aggressive cleaning may damage the rear window defogger.

Use a microfiber cloth fabric dampened with water to clean interior glass. Wipe droplets left behind with a clean dry cloth. If necessary, use a commercial glass cleaner after cleaning with plain water.

Cleaning the interior windshield with water during the first three to six months of ownership will reduce tendency to fog.

### Head-Up Display (HUD)

Clean the inside of the windshield to remove any dirt or film that could reduce the sharpness or clarity of the Head-Up Display (HUD) image.

Clean the Head-Up Display (HUD) lens with a soft cloth sprayed with glass cleaner. Wipe the lens gently, then dry it. See *Head-Up Display (HUD)* ⇨ *115*.

### Speaker Covers

Vacuum gently around speaker covers to prevent damage. Clean spots with water and mild soap.

### Coated Moldings

When cleaning coated moldings:

- When lightly soiled, wipe with a sponge or soft, lint-free cloth dampened with water.
- When heavily soiled, use warm soapy water.

### Vinyl/Rubber Floor and Mats

**⚠ Warning**

Do not use cleaners that contain silicone, wax-based products, or cleaners that increase gloss on vinyl/rubber floor and mats. These cleaners can permanently change the appearance and feel of the vinyl/rubber and can make the floor slippery. Your foot could slip while operating the vehicle, and you could lose control, resulting in a crash. You or others could be injured.

NOT FOR RESALE



If equipped with vinyl/rubber floor and mats, use a soft cloth and/or brush dampened with water to remove dust and loose dirt. For more thorough cleaning, use a mild soap and water solution.

### Fabric/Carpet/Suede

Before cleaning, remove as much solid soils as possible, then gently vacuum the surface using a soft brush attachment. If a rotating vacuum brush attachment is used, only use it on the floor carpet.

Gently blot liquids with a paper towel. Continue blotting until no more soil can be removed.

To clean:

1. Saturate a clean, lint-free colorfast cloth with water. Microfiber cloth is recommended to prevent lint transfer to the fabric or carpet.
2. Remove excess moisture by gently wringing until water does not drip from the cleaning cloth.
3. Start on the outside edge of the soil and gently rub toward the center. Fold the cleaning cloth to a clean area frequently to prevent forcing the soil into the fabric.
4. Continue gently rubbing the soiled area until there is no longer any color transfer from the soil to the cleaning cloth.
5. If the soil is not completely removed, use a mild soap solution followed only by plain water.
6. After cleaning, use a paper towel to blot excess moisture.

Stubborn stains may require a commercial upholstery cleaner or spot lifter. Test a small hidden area for colorfastness before using a commercial upholstery cleaner or spot lifter. If ring formation occurs, clean the entire fabric or carpet.

### Cleaning High Gloss Surfaces, Vehicle Information, and Radio Displays

| Caution |
| --- |
| Do not attach a device with a suction cup to the display. This may cause damage and would not be covered by the vehicle warranty. |

1. Use a soft bristle brush to remove any dirt from the high gloss surface/display.
2. Gently clean the surface/display with a clean microfiber cloth that has not been bleached or washed with fabric softener. Never use window cleaners or solvents. Rinse the microfiber cloth thoroughly and air dry before next use.

### Instrument Panel, Leather, Vinyl, Plastic Surfaces, Low Gloss Paint Surfaces, and Natural Open Pore Wood Surfaces

| Caution |
| --- |
| Soaking or saturating leather, especially perforated leather, as well as other interior surfaces, may cause permanent damage. Wipe excess moisture from these surfaces after cleaning and allow them to dry naturally. Never use heat, steam, or spot removers. Do not use liquids that contain alcohol or solvents on leather seats. Do not use cleaners that contain silicone or wax-based products. Cleaners containing these solvents can permanently change the appearance and feel of leather or soft trim and are not recommended. |

NOT FOR RESALE



**Caution**

Use of air fresheners may cause permanent damage to plastics and painted surfaces. If an air freshener comes in contact with any plastic or painted surface in the vehicle, blot immediately and clean with a soft cloth dampened with a mild soap solution. Damage caused by air fresheners would not be covered by the vehicle warranty.

Use compressed air or a vacuum to remove liquid or dust under the Multi-Functional Controller cap, if equipped.

To remove dust and dirt from knobs and crevices on the instrument cluster:

1. Use a soft bristle brush.
2. Wipe with a soft microfiber cloth dampened with water. Use a mild soap and water solution for more thorough cleaning.

Do not use cleaners that increase gloss, especially on the instrument panel. Reflected glare can decrease visibility through the windshield under certain conditions.

### Cargo Cover and Convenience Net

If equipped, wash with warm water and mild detergent. Do not use chlorine bleach. Rinse with cold water, and then dry completely.

### Care of Seat Belts

**⚠ Warning**

Do not bleach or dye seat belt webbing. It may severely weaken the webbing. In a crash, they might not be able to provide adequate protection. Clean and rinse seat belt webbing only with mild soap and lukewarm water. Allow the webbing to dry.

Keep belts clean and dry.

## Floor Mats

**⚠ Warning**

If a floor mat is the wrong size or is not properly installed, it can interfere with the pedals. Interference with the pedals can cause unintended acceleration and/or

(Continued)

**Warning (Continued)**

increased stopping distance which can cause a crash and injury. Make sure the floor mat does not interfere with the pedals.

Proper Use:

- Use only GM-certified floor mats.
- Do not use a floor mat if the vehicle is not equipped with a floor mat retainer on the driver side floor.
- Use the floor mat with the correct side up. Do not turn it over.
- Do not place anything on top of the driver side floor mat.
- Use only a single floor mat on the driver side.

The original equipment floor mats are specially designed for your vehicle. If the floor mats need replacing, see “Removing and Replacing the Floor Mats” later in this section.

### Removing and Replacing the Floor Mats

The driver side floor mat is held in place by two button-type carpet retainers.

NOT FOR RESALE





1. Pull up on the rear of the floor mat to unlock each retainer and remove.
2. Reinstall by lining up the floor mat retainer openings over the button-type carpet retainers and snapping them into position.
3. Make sure the floor mat is properly secured in place. Verify the floor mat does not interfere with the pedals.

### Cleaning Rubber Floor Mats (All-Weather Mats and Floor Liners)

See “Vinyl/Rubber Floor and Mats” under *Interior Care* ⇨ *315* for important cleaning information.

NOT FOR RESALE



# Service and Maintenance

**General Information**
General Information .....320
**Maintenance Schedule**
Maintenance Schedule ..... 321
**Multi-Point Vehicle Inspection (MPVI)**
Multi-Point Vehicle Inspection (MPVI) .....323
**Special Application Services**
Special Application Services .....324
**Recommended Fluids, Lubricants, and Parts**
Recommended Fluids and Lubricants .....326
**Maintenance Records**
Maintenance Records ..... 327

## General Information

Your vehicle is an important investment. This section describes the required maintenance for the vehicle. Follow this schedule to help protect against major repair expenses resulting from neglect or inadequate maintenance. It may also help to maintain the value of the vehicle if it is sold. It is the responsibility of the owner to have all required maintenance performed.

Your dealer has trained technicians who can perform required maintenance using genuine replacement parts. They have up-to-date tools and equipment for fast and accurate diagnostics. Many dealers have extended evening and Saturday hours, courtesy transportation, and online scheduling to assist with service needs.

Your dealer recognizes the importance of providing competitively priced maintenance and repair services. With trained technicians, the dealer is the place for routine maintenance such as oil changes and tire rotations and additional maintenance items like tires, brakes, batteries, and wiper blades.

**Caution**

Damage caused by improper maintenance can lead to costly repairs and may not be covered by the vehicle warranty. Maintenance intervals, checks, inspections, recommended fluids, and lubricants are important to keep the vehicle in good working condition.

Do not have chemical flushes that are not approved by GM performed on the vehicle. The use of flushes, solvents, cleaners, or lubricants that are not approved by GM could damage the vehicle, requiring expensive repairs that are not covered by the vehicle warranty.

The Tire Rotation and Required Services are the responsibility of the vehicle owner. It is recommended to have your dealer perform these services every 12 000 km/7,500 mi. Proper vehicle maintenance helps to keep the vehicle in good working condition, improves fuel economy, and reduces vehicle emissions.

NOT FOR RESALE



Because of the way people use vehicles, maintenance needs vary. There may need to be more frequent checks and services. The Additional Required Services - Normal are for vehicles that:

- Carry passengers and cargo within recommended limits on the Tire and Loading Information label. See *Vehicle Load Limits* ⇨ *172*.
- Are driven on reasonable road surfaces within legal driving limits.
- Use the recommended fuel. See *Recommended Fuel* ⇨ *244*.

Refer to the information in the Maintenance Schedule Additional Required Services - Normal Service.

The Additional Required Services - Severe are for vehicles that are:

- Mainly driven in heavy city traffic in hot weather.
- Mainly driven in hilly or mountainous terrain.
- Frequently towing a trailer.
- Used for high speed or competitive driving.
- Used for taxi, police, or delivery service.

Refer to the information in the Maintenance Schedule Additional Required Services - Severe Service.

**⚠ Warning**

Performing maintenance work can be dangerous and can cause serious injury. Perform maintenance work only if the required information, proper tools, and equipment are available. If they are not, see your dealer to have a trained technician do the work. See *Doing Your Own Service Work* ⇨ *250*.

## Maintenance Schedule

### Tire Rotation and Required Services Every 12 000 km (7,500 mi)

Tires are rotated to achieve a more uniform wear for all tires. The first rotation is the most important.

Anytime you notice unusual tire wear, rotate the tires as soon as possible, check for proper tire inflation pressure, and check for damaged tires or wheels. If the unusual wear continues after the rotation, check the wheel alignment. See *When It Is Time for New Tires* ⇨ *292* and *Wheel Replacement* ⇨ *296*.

- Perform Multi-Point Vehicle Inspection. See *Multi-Point Vehicle Inspection (MPVI)* ⇨ *323*.
- Lubricate body components. See *Exterior Care* ⇨ *311*.

NOT FOR RESALE



## Additional Required Services — Normal Service

**Every 12 000 km (7,500 mi)**

- Check engine oil level and oil life percentage. If needed, change engine oil and filter, and reset oil life system. Or when the CHANGE ENGINE OIL SOON message displays, have the engine oil and filter changed within the next 1 000 km (600 mi). If driven under the best conditions, the engine oil life system may not indicate the need for vehicle service for up to a year. The engine oil and filter must be changed at least once a year and the oil life system must be reset. Your trained dealer technician can perform this work. If the engine oil life system is reset accidentally, service the vehicle within 5 000 km (3,000 mi) since the last service. Reset the oil life system when the oil is changed. See *Engine Oil Life System* ⇨ *256*.
- Check or replace the engine air filter if vehicle messages indicate inspection or replacement is needed. See *Engine Air Filter Life System* ⇨ *256*.

**Every 36 000 km (22,500 mi)**

- Replace passenger compartment air filter. Or every 24 months, whichever comes first. More frequent passenger compartment air filter replacement may be needed if driving in areas with heavy traffic, poor air quality, high dust levels, or environmental allergens. Passenger compartment air filter replacement may also be needed if there is reduced airflow, window fogging, or odors. Your GM dealer can help determine when to replace the filter.

**Every 96 000 km (60,000 mi)**

- Replace spark plugs. Inspect spark plug wires and/or boots.

**Every 161 000 km (100,000 mi)**

- Replace hood and/or body lift support gas struts. Or every 10 years, whichever comes first. See *Gas Strut(s)* ⇨ *268*.

**Every 240 000 km (150,000 mi)**

- Change rear axle fluid, if equipped with AWD. Do not directly power wash the transfer case and/or front/rear axle output seals. High pressure water can overcome the seals and contaminate the transfer case fluid. Contaminated fluid will decrease the life of the transfer case and/or axles and should be replaced.
- Drain and fill engine cooling system. Or every six years, whichever comes first. See *Cooling System* ⇨ *258*.

## Severe Conditions Requiring More Frequent Maintenance*

- Public service, military, or commercial use vehicles to include the following:
  - Ambulances, police cars, and emergency rescue vehicles.
  - Civilian vehicles such as light duty pick-up trucks, SUVs, and passenger cars that are used in military applications.
  - Recovery vehicles such as tow trucks and flatbed single vehicle carriers or any vehicle that is consistently used in towing trailers or other loads.

NOT FOR RESALE



  - High use commercial vehicles such as courier delivery vehicles, private security patrol vehicles, or any vehicles that operate on a 24-hour basis.
  - Any vehicle consistently operated in a high sand or dust environment such as those used on oil pipelines and similar applications.
- Vehicles that are regularly used for short trips of 6 km (4 mi) or less.

  The oil life indicator will show you when to change the oil and filter. Under severe conditions the indicator may come on before 12 000 km (7,500 mi).

  *Under extreme driving conditions listed above, it may be necessary to replace your spark plugs at more frequent intervals. For further assistance in determining the most suitable service maintenance intervals for your vehicle, please contact your authorized GM dealer.

  Extreme service is for vehicles mainly driven off-road in four-wheel drive or used in farming, mining, forestry, or snow plowing.

### Additional Required Services — Severe Service

**Every 72 000 km (45,000 mi)**

- Change automatic transmission fluid.

**Every 120 000 km (75,000 mi)**

- Change rear axle fluid, if equipped with all-wheel drive. Do not directly power wash the transfer case and/or front/rear axle output seals. High pressure water can overcome the seals and contaminate the transfer case fluid. Contaminated fluid will decrease the life of the transfer case and/or axles and should be replaced.

### Owner Checks and Services

**Every Five Years**

- Replace brake fluid.

**Every Seven Years**

- Replace Air Conditioning Desiccant every seven years. The air conditioning system requires maintenance every seven years. This service requires replacement of the desiccant to help the longevity and efficient operation of the air conditioning system. This service can be complex. See your dealer.

## Multi-Point Vehicle Inspection (MPVI)

A Multi Point Vehicle Inspection completed by a trained technician is a maintenance assessment of your vehicle. The benefit of the Multi Point Vehicle Inspection is to identify service items that require immediate attention and those that may require attention in the future.

The technician will perform the following checks on your vehicle. You can obtain a copy of the appropriate Multi Point Vehicle Inspection checklist on your country's GM Certified Service website. For a complete list of checks, inspections, and services, see your dealer.

Some items may not apply to your vehicle and/or region.

NOT FOR RESALE



**Diagnostics**

- OnStar active, if equipped
- Service history/recall check

**Engine Oil and Filter**

- Engine oil
- Oil life monitor
  - Reset oil life monitor

**Exterior Lights**

- Visual inspection

**Windshield and Wipers**

- Visual inspection

**12 Volt Battery**

- Battery visual inspection
- Battery test results
- Battery cables and connections

**Systems, Fluids, and Visible Leak Inspection**

- Engine oil
- Transmission
- Drive axle
- Transfer case
- Engine cooling system
- Power steering, if equipped
- Fuel system
- Windshield washer fluid

**Tire Inspection**

- Tire pressure, tread depth, and wear
- Rotation, if applicable
- Alignment check, optional
- Reset tire pressure monitor
- Check tire sealant expiration date, if equipped
- Check spare tire, if equipped

**Brakes**

- Check brake system

**Visible and Functional Inspections**

- Seat belt components
- Exhaust system
- Accelerator pedal
- Passenger compartment air filter, if equipped
- Engine air filter
- Hoses
- Belts
- Shocks and struts
- Steering components
- Axle boots or driveshaft and u-joints
- Compartment lift struts, if equipped
- Floor mats secured, no interference with pedals
- Horn
- Ignition lock, if equipped
- Starter switch
- Evaporative control system

**Lubricate**

- Chassis components

## Special Application Services

- Severe Commercial Use Vehicles Only: Lubricate chassis components every oil change.

NOT FOR RESALE



- Have underbody flushing service performed. See "Underbody Maintenance" in *Exterior Care* ⇨ *311*.

NOT FOR RESALE



# Recommended Fluids, Lubricants, and Parts

## Recommended Fluids and Lubricants

Fluids and lubricants identified below by name or specification, including fluids or lubricants not listed here, can be obtained from your dealer.

| Usage | Fluid/Lubricant |
|---|---|
| Automatic Transmission | DEXRON-VI Automatic Transmission Fluid. |
| Engine Coolant | 50/50 mixture of clean, drinkable water and use only DEX-COOL Coolant. See *Cooling System* ⇨ *258*. |
| Engine Oil | Engine oil meeting the dexos1 specification of the proper SAE viscosity grade. ACDelco dexos1 full synthetic is recommended. See *Engine Oil* ⇨ *254*. |
| Hood Latch Assembly, Secondary Latch, Pivots, Spring Anchor, and Release Pawl | Lubriplate Lubricant Aerosol or lubricant meeting requirements of NLGI #2, Category LB or GC-LB. |
| Hydraulic Brake System | DOT 4 Hydraulic Brake Fluid. |
| Key Lock Cylinders, Hood and Door Hinges | Multi-Purpose Lubricant, Superlube. See your dealer. |
| Rear Axle | See your dealer. |
| Windshield Washer | Automotive windshield washer fluid that meets regional freeze protection requirements. |

NOT FOR RESALE



## Maintenance Records

After scheduled services are performed, record the date, odometer reading, who performed the service, and the type of services performed in the boxes provided. Retain all maintenance receipts.

| Date | Odometer Reading | Serviced By | Services Performed |
|---|---|---|---|
| | | | |
| | | | |
| | | | |
| | | | |
| | | | |
| | | | |
| | | | |
| | | | |

NOT FOR RESALE



# Technical Data

**Vehicle Identification**
Vehicle Identification Number (VIN) .....328
Service Parts Identification ..... 328

**Vehicle Data**
Capacities and Specifications ..... 329
Engine Drive Belt Routing ..... 330

# Vehicle Identification

## Vehicle Identification Number (VIN)




This legal identifier is in the front corner of the instrument panel, on the driver side of the vehicle. It can be seen through the windshield from outside. The Vehicle Identification Number (VIN) also appears on the Vehicle Certification label and certificates of title and registration.

### Engine Identification

The eighth character in the Vehicle Identification Number (VIN) is the engine code. This code identifies the vehicle engine, specifications, and replacement parts. See "Engine Specifications" under *Capacities and Specifications* ⇨ *329* for the vehicle engine code.

## Service Parts Identification

The certification label provides vehicle service information to the service technician.

There may be a large barcode on the certification label on the door frame that the service technician can scan for the following information:

- Vehicle Identification Number (VIN)
- Model designation
- Paint information
- Production options

If there is not a large barcode on this label, the same information can be found on a label in the rear storage area.

NOT FOR RESALE



# Vehicle Data

## Capacities and Specifications

The following approximate capacities are given in metric and English conversions. See *Recommended Fluids and Lubricants* ⇨ *326* for more information.

| Application | Capacities | |
|---|---|---|
| | Metric | English |
| Air Conditioning Refrigerant | For the air conditioning system refrigerant type and charge amount, see the refrigerant label under the hood. See your dealer for more information. | |
| Engine Cooling System* | | |
| 2.5L L4 Engine | 16.9 L | 17.9 qt |
| Engine Oil with Filter | 5.2 L | 5.5 qt |
| Fuel Tank | | |
| Front-Wheel Drive | 73.0 L | 19.4 gal |
| All-Wheel Drive | 82.0 L | 21.7 gal |
| Wheel Nut Torque | 190 N•m | 140 lb ft |
| All capacities are approximate. When adding, be sure to fill to the approximate level, as recommended in this manual. Recheck fluid level after filling. | | |
| *Engine cooling system capacity values are based on the entire cooling system and its components. | | |

NOT FOR RESALE



## Engine Specifications

| Engine | VIN Code | Transmission | Spark Plug Gap |
|---|---|---|---|
| 2.5L L4 Turbo Engine (LK0) | S | Automatic | 0.65–0.75 mm (0.026–0.030 in) |
| Spark plug gaps are preset by the manufacturer. Re-gapping the spark plug is not recommended and can damage the spark plug. | | | |

## Engine Drive Belt Routing

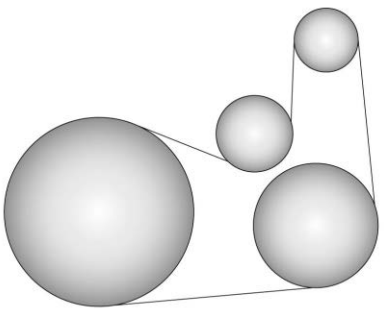

2.5L L4 Engine

NOT FOR RESALE



# Customer Information

**Customer Information**
Customer Satisfaction Procedure ..... 331
California Warranty Information ..... 333
Customer Assistance Offices ..... 335
Customer Assistance for Text Telephone (TTY) Users ..... 335
Online Account and Customer Support ... 335
GM Mobility Reimbursement Program (U.S. Only) ..... 336
Roadside Assistance Program ..... 336
Scheduling Service Appointments ..... 338
Courtesy Transportation Program ..... 338
If a Crash Occurs ..... 339
Collision Damage Repair ..... 339
Publication Ordering Information ..... 340
Radio Frequency Statement ..... 341

**Reporting Safety Defects**
Reporting Safety Defects to the United States Government ..... 341
Reporting Safety Defects to the Canadian Government ..... 341
Reporting Safety Defects to General Motors ..... 342

**Vehicle Data Recording and Privacy**
Vehicle Data Recording and Privacy ..... 342
Cybersecurity ..... 342
Event Data Recorders ..... 342
OnStar ..... 343
Infotainment System ..... 343

## Customer Satisfaction Procedure

Your satisfaction and goodwill are important to your dealer and to Buick. Normally, any concerns with the sales transaction or the operation of the vehicle will be resolved by your dealer's sales or service departments. Sometimes, however, despite the best intentions of all concerned, misunderstandings can occur. If your concern has not been resolved to your satisfaction, the following steps should be taken:

**STEP ONE:** Discuss your concern with a member of dealership management. Normally, concerns can be quickly resolved at that level. If the matter has already been reviewed with the sales, service, or parts manager, contact the owner of your dealership or the general manager.

**STEP TWO:** If after contacting a member of dealership management, it appears your concern cannot be resolved by your dealership without further help, in the U.S., call 1-800-521-7300. In Canada, contact General Motors of Canada Customer Care Centre at 1-800-263-3777 (English) or 1-800-263-7854 (French).

NOT FOR RESALE



We encourage you to call the toll-free number in order to give the inquiry prompt attention. Have the following information available to give the Customer Assistance representative:

- Vehicle Identification Number (VIN). This is available from the vehicle registration or title, or the plate at the top left of the instrument panel and visible through the windshield.
- Dealership name and location.
- Vehicle delivery date and present mileage.

When contacting Buick, remember that your concern will likely be resolved at a dealer's facility. That is why we suggest following Step One first.

**STEP THREE — U.S. Owners:** Both GM and your GM dealer are committed to making sure you are completely satisfied with the new vehicle. However, if you continue to remain unsatisfied after following the procedure outlined in Steps One and Two, you can file with the Better Business Bureau (BBB) AUTO LINE® Program to enforce any additional rights you may have.

The BBB AUTO LINE Program is an out-of-court program administered by BBB National Programs, Inc. to settle automotive disputes regarding vehicle repairs or the interpretation of the New Vehicle Limited Warranty. Although you may be required to resort to this informal dispute resolution program prior to filing a court action, use of the program is free of charge and your case will generally be heard within 40 days. If you do not agree with the decision given in your case, you may reject it and proceed with any other venue for relief available to you. When contacting the BBB AUTO LINE, you will need to provide the following information: Owner's name and address, Vehicle identification number (VIN), the Year, Make, Model, mileage of the vehicle and provide a description of the concern.

Contact the BBB AUTO LINE Program using the toll-free telephone number or write them at the following address:

BBB AUTO LINE Program
BBB National Programs, Inc.
1676 International Drive
Suite 550
McLean, VA 22102

Telephone: 1-800-955-5100
www.bbbautoline.org

This program is available in all 50 states and the District of Columbia. Eligibility is limited by vehicle age, mileage, and other factors. General Motors reserves the right to change eligibility limitations and/or discontinue its participation in this program.

**STEP THREE — Canadian Owners:** In the event that you do not feel your concerns have been addressed after following the procedure outlined in Steps One and Two, General Motors of Canada Company wants you to be aware of its participation in a no-charge Mediation/Arbitration program. General Motors of Canada Company has committed to binding arbitration of owner disputes involving factory-related vehicle service claims. The program provides for the review of the facts involved by an impartial third party arbiter, and may include an informal hearing before the arbiter. The program is designed so that the entire dispute settlement process, from the time you file your complaint to the final decision, should be completed in about 70 days. We believe our impartial program offers advantages over courts in most jurisdictions because it is informal, quick, and free of charge.

For further information concerning eligibility in the Canadian Motor Vehicle Arbitration Plan (CAMVAP), call toll-free 1-800-207-0685, or call

NOT FOR RESALE



the General Motors Customer Care Centre, 1-800-263-3777 (English), 1-800-263-7854 (French), or write to:

Mediation/Arbitration Program
c/o Customer Care Centre
General Motors of Canada Company
500 Wentworth Street W
Oshawa, ON L1J 0C5

The inquiry should be accompanied by the Vehicle Identification Number (VIN).

## California Warranty Information

The Song-Beverly Consumer Warranty Act provides consumers who purchase or lease a new motor vehicle in California with certain rights if their vehicle has nonconformities that GM or its authorized repair facilities (e.g., GM dealers) are unable to repair after a reasonable number of attempts.

Applied to your vehicle, California Civil Code Section 1793.2(d) requires that, if GM or its authorized repair facilities are unable to repair a new motor vehicle to conform to the vehicle's applicable express warranties after a reasonable number of attempts, GM shall either replace the new motor vehicle or provide restitution in accordance with a statutory formula.

California Civil Code Section 1793.22(b) creates a presumption that GM has had a reasonable number of attempts to conform the vehicle to its applicable express warranties if, within 18 months from delivery to the buyer or 18,000 miles on the vehicle's odometer, whichever occurs first, one or more of the following occurs:

- The same nonconformity results in a condition that is likely to cause death or serious bodily injury if the vehicle is driven AND the nonconformity has been subject to repair two or more times by GM or its authorized repair facilities (e.g., dealers) AND the buyer or lessee has at least once directly notified GM of the need for the repair of the nonconformity by mailing such notification to the address listed below.
- The same nonconformity has been subject to repair four or more times by GM or its authorized repair facilities AND the buyer has at least once directly notified GM of the need for the repair of the nonconformity by mailing such notification to the address listed below.
- The vehicle is out of service by reason of repair nonconformities by GM or its authorized repair facilities for a cumulative total of more than 30 calendar days after delivery of the vehicle to the buyer.

If you purchased or leased a new motor vehicle in California and GM or its authorized repair facilities have been unable to repair the vehicle to conform it to applicable express warranties within a reasonable number of attempts, you may be eligible for relief under the Song-Beverly Consumer Warranty Act. You can submit a claim with the BBB AUTO LINE Program (see *Customer Satisfaction Procedure* ⇨ *331*) or you can request in writing that GM replace or repurchase your vehicle.

**Notice to General Motors regarding warranty issues must be sent either by email to californiawarrantynotice@gm.com or by certified or registered mail, return receipt requested, to the following address:**

California Repurchase Notice
P.O. Box 33173
Detroit, MI 48232-5173

NOT FOR RESALE



Any repurchase request must include your name, the accurate Vehicle Identification Number ("VIN") of your vehicle, a brief summary of the repair history and problems with the vehicle.

### Información de garantía de California

La Ley de Garantía del Consumidor Song-Beverly brinda a los consumidores que compran o alquilan un vehículo automotor nuevo en California ciertos derechos si su vehículo presenta inconformidades que GM o sus talleres de reparación autorizadas (por ejemplo, los distribuidores de GM) no pueden reparar después de una cantidad razonable de intentos.

Aplicado a su vehículo, la Sección 1793.2(d) del Código Civil de California requiere que, si GM o sus talleres de reparación autorizadas no pueden reparar un vehículo automotor nuevo para cumplir con las garantías expresas aplicables del vehículo después de una cantidad razonable de intentos, GM deberá reemplazar el vehículo automotor nuevo o proporcionar una restitución de acuerdo con una fórmula legal.

La Sección 1793.22(b) del Código Civil de California crea una presunción de que GM ha realizado un número razonable de intentos para adaptar el vehículo a sus garantías expresas aplicables si, dentro de los 18 meses desde la entrega al comprador o 18,000 millas en el odómetro del vehículo, lo que ocurra primero, ocurre uno o más de los siguientes:

- La misma inconformidad da como resultado una condición que probablemente cause la muerte o lesiones corporales graves si se conduce el vehículo Y la inconformidad ha sido objeto de reparación dos o más veces por GM o sus talleres de reparación autorizadas (por ejemplo, distribuidores) Y el comprador o arrendatario ha notificado directamente por lo menos una vez a GM sobre la necesidad de reparar la inconformidad enviando dicha notificación por correo a la dirección que se indica a continuación.
- La misma inconformidad ha sido objeto de reparación cuatro o más veces por GM o sus talleres de reparación autorizadas Y el comprador ha notificado directamente por lo menos una vez a GM sobre la necesidad de la reparación de la inconformidad enviando dicha notificación a la dirección que se indica a continuación.
- El vehículo está fuera de servicio debido a inconformidades de reparación por parte de GM o sus talleres de reparación autorizadas por un total acumulado de más de 30 días calendario después de la entrega del vehículo al comprador.

Si compró o alquiló un vehículo automotor nuevo en California y GM o sus talleres de reparación autorizados no han podido reparar el vehículo para cumplir con las garantías expresas aplicables dentro de una cantidad razonable de intentos, puede ser elegible para recibir ayuda bajo la Ley de Garantía del Consumidor Song-Beverly. Puede presentar un reclamo ante el Programa BBB AUTO LINE (consulte el Procedimiento de satisfacción del cliente) o puede solicitar por escrito que GM reemplace o recompre su vehículo.

El aviso a General Motors sobre problemas de garantía debe enviarse por correo electrónico a californiawarrantynotice@gm.com o por correo certificado o registrado, con acuse de recibo solicitado, a la siguiente dirección:

Aviso de recompra de California
P.O. Box 33173

NOT FOR RESALE



Detroit, MI 48232-5173

La solicitud para reemplazo o recompra debe incluir su nombre, el Número de identificación del vehículo ("NIV") preciso de su vehículo, un breve resumen del historial de reparación y problemas con el vehículo.

## Customer Assistance Offices

Buick is committed to assisting customers. Visit us online at www.buick.com/support (U.S.) or www.buick.ca/en/owners (Canada) to chat with us or find answers to commonly asked questions, tips, vehicle how-to instructions, and available support services.

Need more help? Use the telephone numbers or mailing addresses below for additional assistance.

### United States and Puerto Rico

Buick Customer Assistance Center
P.O. Box 33136
Detroit, MI 48232-5136

1-800-521-7300

TTY: Dial 711 relay service and contact 1-800-833-2438

Roadside Assistance: 1-800-252-1112

### Canada

Customer Care Centre
General Motors of Canada Company
500 Wentworth Street W
Oshawa, ON L1J 0C5

1-800-263-3777 (English)

1-800-263-7854 (French)

TTY: Dial 711 relay service and contact 1-800-263-3777

Roadside Assistance: 1-800-268-6800

### All Overseas Locations

Please contact the local General Motors Business Unit.

## Customer Assistance for Text Telephone (TTY) Users

To assist customers who are deaf, hard of hearing, or speech-impaired and/or who use Text Telephones (TTYs), please dial the national 711 relay service and contact 1-800-833-2438. TTY users in Canada can dial 1-800-263-3777.

## Online Account and Customer Support

### Create a Buick Account (U.S.) at buick.com

Learn more about your vehicle features, shop for and manage your connected services and OnStar plans, and access diagnostic information specific to your vehicle. Visit buick.com and create an account today.

#### Membership Benefits

**:** Download owner's manuals and view vehicle-specific how-to videos.

**:** View maintenance schedules, alerts, and Vehicle Diagnostic Information. Schedule service appointments.

**:** View service records from your dealership and add your own.

**:** Select a dealer and view locations, maps, phone numbers, and hours.

**:** Track your vehicle warranty information.

**:** View active recalls by Vehicle Identification Number. See *Vehicle Identification Number (VIN)* ⇨ *328*.

NOT FOR RESALE



: Manage your profile and payment information. View your GM Rewards Card earnings and My Buick Rewards points.

: Chat with online help representatives.

### Buick Account (Canada)

Visit your Buick Account at buick.ca/en (English) or buick.ca/fr (French) to access similar benefits.

## GM Mobility Reimbursement Program (U.S. Only)

GENERAL MOTORS MOBILITY

This program is available to qualified applicants for cost reimbursement, up to certain limits, of eligible aftermarket adaptive equipment required for the vehicle, such as hand controls or a wheelchair/scooter lift for the vehicle.

To learn about the GM Mobility program, call General Motors at 1-800-467-9700. To customers who are deaf, hard of hearing, or speech-impaired and/or who use Text Telephones (TTYs), please dial the national 711 relay service and contact 1-800-467-9700.

## Roadside Assistance Program

From the U.S., call 1-800-252-1112; Text Telephone (TTY) Users (U.S. Only): Contact 711 relay service and provide 800-252-1112.

From Canada, call 1-800-268-6800.

Service is available 24 hours a day, 365 days a year.

### Calling for Assistance

When calling Roadside Assistance, have the following information ready:

- Your name, home address, and home telephone number
- Your mobile telephone number or the telephone number of your current location
- Location of the vehicle
- Model, year, color, and license plate number of the vehicle
- Odometer reading and Vehicle Identification Number (VIN)
- Description of the problem

### Coverage

Vehicles with an active Powertrain Warranty receive service.

In the U.S. and Canada, Roadside coverage applies only when the person operating the vehicle has the owner's permission to drive it.

Roadside Assistance is available for vehicles within the applicable Powertrain Limited Warranty coverage period or the Electric Vehicle/Hybrid Vehicle Propulsion coverage period. General Motors North America and Buick can make any changes or discontinue the Roadside Assistance program at any time without notification.

General Motors North America and Buick may choose to limit services or payment to an owner or driver if they decide the driver is making claims too often or made the same type of claim too frequently.

NOT FOR RESALE



### Services Provided

- **Emergency Fuel Delivery:** Delivery of enough fuel for the vehicle to get to the nearest service station. Fuel will not be delivered to vehicles at a service station.
- **Lock-Out Service:** Service to unlock the vehicle if you cannot open the doors. For security reasons, the driver must present identification to receive service. A remote unlock may be available if you have OnStar.
- **Emergency Tow from a Public Road or Highway:** Tow to the nearest Buick dealer for warranty service, or if a vehicle cannot drive due to a crash.
- **Flat Tire Change:** Service to change a flat tire with the spare tire. The spare tire, if equipped, must be in good condition and properly inflated. If the warranty does not cover the tire, it is the owner's responsibility to repair or replace it
- **Battery Jump Start:** Service to jump start a dead battery.
- **Trip Interruption Benefits and Assistance:** If you cannot continue your trip due to a warranty event, Roadside Assistance may reimburse incidental expense within the Powertrain Warranty period. This includes hotels, meals, rental car, or a vehicle being delivered back to the customer, up to 500 miles.

### Services Not Included in Roadside Assistance

- Delivery of fuel to vehicles at a service station.
- Impound towing caused by violation of any laws
- Reimbursement of legal fines
- Reimbursement of police mandated tows
- Mounting, dismounting, or changing of snow tires, chains, or other traction devices
- Towing of anything attached to the vehicle like boats, campers, trailers, cargo boxes, etc.
- Vehicles stranded due to off-road driving
- Vehicles stuck in the sand, mud, or snow
- Ferry towing (Customers are responsible for the coordination and payment of any ferry involvement prior to Roadside dispatching)
- Airfare reimbursement

Roadside Assistance does not provide service if a vehicle is in an area that is not accessible to the service vehicle or is not a regularly traveled or maintained public road, which includes ice and winter roads. Customers do not receive vehicle service on restricted roadways. This includes, but are not partial to, some highways, tunnels, toll roads, toll bridges, turnpikes, and service roads.

### Services Specific to Canadian-Purchased Vehicles

- **Fuel Delivery:** Reimbursement is up to 7 liters. This service does not provide propane and other fuels. Fuel will not be delivered to vehicles at a service station.
- **Lock-Out Service:** Requires vehicle registration.
- **Trip Interruption Benefits and Assistance:** Must be traveling 150 km from the start of the trip to qualify. Benefits and assistance require pre-authorization, original detailed receipts, and a copy of the repair orders. When the Roadside Assistance advisor receives permission, they will help to explain and plan how to receive payment. Examples of benefits and assistance include hotels, meals, and rental car.

NOT FOR RESALE



- **Alternative Service:** The Roadside Assistance advisor may allow local emergency road service if the customer cannot receive immediate service. You will receive payment, up to $100, after sending the original receipt to Roadside Assistance. The vehicle owner is responsible for any costs for parts and labor for repairs the warranty does not cover. Coverage may also apply to mechanical failures.

## Scheduling Service Appointments

If your vehicle requires service, contact your dealer and request an appointment. By scheduling a service appointment and advising the service consultant of your transportation needs, your dealer can help minimize your inconvenience. Be sure to notify your dealer of any safety-related concerns when requesting the appointment.

If you cannot schedule service immediately, keep driving the vehicle until your scheduled appointment, unless the problem is safety related.

If you are seeking a same-day repair, schedule your appointment as early in the day as possible.

## Courtesy Transportation Program

GM and our participating dealers are proud to offer Courtesy Transportation. This customer support program minimizes inconvenience during warranty repairs for vehicles with the Bumper-to-Bumper (Base Warranty Coverage period in Canada), Federal Emission, Extended Powertrain, or Electric-specific warranties in both the U.S. and Canada.

Courtesy Transportation is not a part of the New Vehicle Limited Warranty. See the "Limited Warranty and Owner Assistance Information" manual for detailed new vehicle warranty coverage information.

### Transportation Options

Warranty service is often completed while you wait. If not, your dealer may offer these transportation options:

#### Shuttle Service

One-way or round-trip shuttle service within a reasonable time and distance from your dealer.

#### Public Transportation, Ridesharing App, or Fuel Reimbursement

If your vehicle is kept overnight for repairs and you use public transportation or a ridesharing app, original receipts must support the expense within GM's allowed maximum to qualify for reimbursement. If U.S. customers arrange their own transportation, limited reimbursement for reasonable fuel expenses may be available. Claims should reflect actual costs and must be supported by original receipts. See your dealer for information.

#### Courtesy Rental Vehicle

For an overnight warranty repair, the dealer may offer a courtesy rental vehicle or reimburse rental costs. Reimbursement requires original receipts, a signed and complete rental agreement, and must meet state/provincial, local and rental vehicle provider requirements, which may include, minimum age requirements, insurance coverage, and credit card. Additional fees for fuel, rental vehicle insurance, taxes, levies, usage fees, excessive mileage, or rental usage beyond the completion of the repair are your responsibility.

NOT FOR RESALE



A like vehicle may not be available as a courtesy rental.

### Additional Program Information

Not all program options, like shuttle service, are available at every dealer. Contact your dealer for availability.

General Motors reserves the right to unilaterally modify, change, or discontinue Courtesy Transportation at any time and to resolve all questions of claim eligibility pursuant to the terms and conditions described herein at its sole discretion.

## If a Crash Occurs

If there has been an injury, call emergency services for help. Do not leave the scene of a crash until all parties address the matter. Move the vehicle only if its position puts you in danger, or a police officer tells you to move it.

Give only the necessary information to police and other parties involved in the crash.

For emergency towing see *Roadside Assistance Program* ⇨ *336*.

Gather the following information:

- Driver name, address, and telephone number
- Driver license number
- Owner name, address, and telephone number
- Vehicle license plate number
- Vehicle make, model, and model year
- Vehicle Identification Number (VIN)
- Insurance company and policy number
- General description of the damage to the other vehicle

Choose a reputable repair facility that uses quality replacement parts. See "Collision Parts" in *Collision Damage Repair* ⇨ *339*.

If the airbag has inflated, see *What Will You See After an Airbag Inflates?* ⇨ *58*.

## Collision Damage Repair

If the vehicle is damaged in a collision, have it repaired by a qualified technician using the proper equipment and Genuine GM Collision replacement parts. Poorly performed collision repairs diminish the vehicle resale value and safety performance.

### Managing the Vehicle Damage Repair Process

#### Repair Facility

Taking an active role in the vehicle repair process is important. Choose a collision repair facility that meets your needs before you ever need collision repairs. Your dealer may have a collision repair center with GM-trained technicians and state-of-the-art equipment or be able to recommend a collision repair center that has GM-trained technicians and comparable equipment.

If you have a preferred repair facility, take the vehicle there, or have it towed there. Specify to the facility that any required replacement collision parts be original equipment parts. Remember, only Genuine GM parts are covered by the GM vehicle warranty. See "Collision Parts" later in this section.

#### Collision Parts

Genuine GM Collision parts are new parts made with the same materials and construction methods as factory installed parts. Genuine GM Collision parts ensure that the vehicle's designed appearance, durability, and safety

NOT FOR RESALE



features are preserved. The use of Genuine GM parts can help maintain the GM New Vehicle Limited Warranty.

Recycled original equipment parts may be an acceptable choice to maintain the vehicle's appearance and safety performance; however, the history of these parts may not be known. Such parts are not covered by the GM New Vehicle Limited Warranty, and any related failures are not covered by that warranty.

Aftermarket collision parts made by companies other than GM may fit poorly, exhibit premature durability/corrosion problems, and may not perform properly in subsequent collisions. Aftermarket parts are not covered by the GM New Vehicle Limited Warranty, and any vehicle failure related to such parts is not covered by that warranty.

#### Insuring the Vehicle

Protect your GM vehicle with comprehensive and collision insurance coverage. There are significant differences in the quality of coverage afforded by various insurance policy terms. If the vehicle is repaired with any parts that are not GM original equipment collision parts, they will not be covered or under warranty. If such insurance coverage is not available from your current insurance carrier, consider switching to another insurance carrier.

If you are leasing your vehicle, the leasing company may require you to have insurance that ensures repairs with Genuine GM Original Equipment Manufacturer parts or Genuine Manufacturer replacement parts. Read the lease carefully, as you may be charged at the end of the lease for poor quality repairs.

Depending on your policy limits, your insurance company may initially value the repair using aftermarket parts. Discuss this with the repair professional and insist on Genuine GM parts. Remember, if the vehicle is leased, you may be obligated to have the vehicle repaired with Genuine GM parts, even if your insurance coverage does not pay the full cost.

If another party's insurance company is paying for the repairs, you are not obligated to accept a repair valuation based on that insurance company's collision policy repair limits, as you have no contractual limits with that company. In such cases, you can have control of the repair and parts choices if the cost stays within reasonable limits.

## Publication Ordering Information

### Service Manuals

Service manuals have the diagnosis and repair information on the engine/propulsion, transmission, axle, suspension, brakes, electrical system, steering system, body, etc.

### Customer Literature

Owner's manuals are written specifically for owners and are intended to provide basic operational information about the vehicle. The owner's manual includes the Maintenance Schedule for all models.

Customer literature publications available for purchase include owner's manuals, warranty manuals, and portfolios. Portfolios include an owner's manual, warranty manual, if applicable, and zip lock bag or pouch.

### Current and Past Models

Service manuals and customer literature are available for many GM vehicles.

To check availability and to order, call 1-800-551-4123 Monday–Friday, 8:00 a.m.–6:00 p.m. Eastern Time

NOT FOR RESALE



For credit card orders only (VISA, MasterCard, or Discover), see Helm, Inc. at: www.helminc.com.

To order by mail, write to:

Helm Incorporated
Attention: Customer Service
47911 Halyard Drive, Suite 200
Plymouth, MI 48170

Make checks payable in U.S. funds.

### Radio Frequency Statement

This vehicle uses license-exempt transmitters / receivers / systems that operate on a radio frequency that complies with Part 15/Part 18 of the Federal Communications Commission (FCC) rules and with Innovation, Science and Economic Development (ISED) Canada's license-exempt RSS(s) / RSP-100 / ICES-GEN.

Operation is subject to the following two conditions:

1. The device may not cause harmful interference.
2. The device must accept any interference received, including interference that may cause undesired operation of the device.

Changes or modifications to any of these systems by other than an authorized service facility could void authorization to use this equipment.

## Reporting Safety Defects

### Reporting Safety Defects to the United States Government

If you believe that your vehicle has a defect which could cause a crash or could cause injury or death, you should immediately inform the National Highway Traffic Safety Administration (NHTSA) in addition to notifying General Motors.

If NHTSA receives similar complaints, it may open an investigation, and if it finds that a safety defect exists in a group of vehicles, it may order a recall and remedy campaign. However, NHTSA cannot become involved in individual problems between you, your dealer, or General Motors.

To contact NHTSA, you may call the Vehicle Safety Hotline toll-free at 1-888-327-4236 (TTY: 888-275-9171); go to *https://www.safercar.gov;* or write to:

Administrator, NHTSA
1200 New Jersey Avenue, S.E.,
Washington, D.C. , 20590

You can also obtain other information about motor vehicle safety from *https://www.safercar.gov*.

### Reporting Safety Defects to the Canadian Government

If you live in Canada, and you believe that the vehicle has a safety defect, notify Transport Canada immediately, and notify General Motors of Canada Company. Call Transport Canada at 1-800-333-0510; go to:

www.tc.gc.ca/recalls (English)

www.tc.gc.ca/rappels (French)

or write to:

Transport Canada
Motor Vehicle Safety Directorate
Defect Investigations and Recalls Division

NOT FOR RESALE



80 Noel Street
Gatineau , QC J8Z 0A1

## Reporting Safety Defects to General Motors

In addition to notifying NHTSA (or Transport Canada) in a situation like this, notify General Motors.

In the U.S., call 1-800-521-7300, or write:

Buick Customer Assistance Center
P.O. Box 33136
Detroit, MI 48232–5136

In Canada, call 1-800-263-3777 (English) or 1-800-263-7854 (French), or write:

General Motors of Canada Company
Customer Care Centre
500 Wentworth Street W
Oshawa, ON L1J 0C5

In Mexico, call 800-200-2842 or 800-466-0818.

In other Central America and Caribbean Countries, call 52-555-901-2369.

# Vehicle Data Recording and Privacy

The vehicle has a number of computers that record information about the vehicle's performance and how it is driven or used. For example, the vehicle uses computer modules to monitor and control engine and transmission performance, to monitor the conditions for airbag deployment and deploy them in a crash, and, if equipped, to provide antilock braking to help the driver control the vehicle. These modules may store data to help the dealer technician service the vehicle or to help GM improve safety or features. Some modules may also store data about how the vehicle is operated, such as rate of fuel consumption or average speed. These modules may retain personal preferences, such as radio presets, seat positions, and temperature settings.

## Cybersecurity

GM collects information about the use of your vehicle including operational and safety related information. We collect this information to provide, evaluate, improve, and troubleshoot our products and services and to develop new products and services.

The protection of vehicle electronics systems and customer data from unauthorized outside electronic access or control is important to GM. GM maintains appropriate security standards, practices, guidelines and controls aimed at defending the vehicle and the vehicle service ecosystem against unauthorized electronic access, detecting possible malicious activity in related networks, and responding to suspected cybersecurity incidents in a timely, coordinated and effective manner. Security incidents could impact your safety or compromise your private data. To minimize security risks, please do not connect your vehicle electronic systems to unauthorized devices or connect your vehicle to any unknown or untrusted networks (such as Bluetooth, Wi-Fi, or similar technology). In the event you suspect any security incident impacting your data or the safe operation of your vehicle, please stop operating your vehicle and contact your dealer.

## Event Data Recorders

This vehicle is equipped with an Event Data Recorder (EDR). The main purpose of an EDR is to record, in certain crash or near crash-like situations, such as an air bag deployment or

NOT FOR RESALE



hitting a road obstacle, data that will assist in understanding how a vehicle's systems performed. The EDR is designed to record data related to vehicle dynamics and safety systems for a short period of time, typically 30 seconds or less. The EDR in this vehicle is designed to record such data as:

- How various systems in your vehicle were operating;
- Whether or not the driver and passenger safety belts were buckled/fastened;
- How far (if at all) the driver was depressing the accelerator and/or brake pedal; and,
- How fast the vehicle was traveling.

These data can help provide a better understanding of the circumstances in which crashes and injuries occur.

**Note**
EDR data are recorded by your vehicle only if a non-trivial crash situation occurs; no data are recorded by the EDR under normal driving conditions and no personal data (e.g., name, gender, age, and crash location) are recorded. However, other parties, such as law enforcement, could combine the EDR data with the type of personally identifying data routinely acquired during a crash investigation.

To read data recorded by an EDR, special equipment is required, and access to the vehicle or the EDR is needed. In addition to the vehicle manufacturer, other parties, such as law enforcement, that have the special equipment, can read the information if they have access to the vehicle or the EDR.

GM will not access these data or share it with others except: with the consent of the vehicle owner or, if the vehicle is leased, with the consent of the lessee; in response to an official request by police or similar government office; as part of GM's defense of litigation through the discovery process; or, as permitted by law. Data that GM collects or receives may also be used for GM research needs or may be made available to others for research purposes, where a need is shown and the data is not tied to a specific vehicle or vehicle owner.

## OnStar

If the vehicle is equipped with OnStar and has an active service plan, additional data may be collected and transmitted through the OnStar system. This includes information about the vehicle's operation; collisions involving the vehicle; the use of the vehicle and its features, including infotainment; and the location and approximate GPS speed of the vehicle. Refer to the OnStar Terms and Conditions and Privacy Statement on the OnStar website.

See *OnStar Additional Information* ⇨ *345*.

## Infotainment System

If the vehicle is equipped with a navigation system as part of the infotainment system, use of the system may result in the storage of destinations, addresses, telephone numbers, and other trip information. See the infotainment section for information on stored data and for deletion instructions.

NOT FOR RESALE



# OnStar

**OnStar Overview**
OnStar Overview ..... 344
**OnStar Services**
Emergency ..... 345
Security ..... 345
**OnStar Additional Information**
OnStar Additional Information ..... 345

## OnStar Overview

This vehicle may be equipped with a comprehensive, in-vehicle system that can connect to an OnStar Advisor for Emergency, Security, Navigation, Connection, and Diagnostic Services. OnStar services may require a paid service plan and data plan. OnStar requires the vehicle battery and electrical system, cellular service, and GPS satellite signals to be available and operating. OnStar acts as a link to existing emergency service providers.

OnStar may collect information about you and your vehicle, including location information. See OnStar User Terms, Privacy Statement, and Software Terms for more details including system limitations at www.onstar.com (U.S.) or www.onstar.ca (Canada).




White OnStar Button

Blue OnStar Button

Red Emergency Button

The OnStar system status light is next to the OnStar buttons. When the status light is:

- Solid Green: the system is ready.
- Flashing Green: the system is on a call.
- Red: a problem has been detected.
- Off: the system is off. Press On twice to speak with an OnStar Advisor.

Press On or call 1-888-4ONSTAR (1-888-466-7827) to speak to an OnStar Advisor.

Press to end ongoing calls with an OnStar Advisor.

Press On to connect to the OnStar Virtual Assistant to:

- Verify account information or update contact information.
- Request driving directions.
- Request a Diagnostic check of essential operating systems.
- Request Roadside Assistance.
- Manage Wi-Fi Settings, if equipped.

NOT FOR RESALE



Press SOS to get a priority connection to an OnStar Advisor available 24/7 to:

- Request help for an emergency, severe weather, or other crisis situations, and find evacuation routes.
- Be a Good Samaritan or respond to an AMBER Alert.

# OnStar Services

## Emergency

Emergency Services require an active safety and security plan. With Automatic Crash Response, built-in sensors can automatically connect an OnStar Advisor into the vehicle to help.

Press SOS for a priority connection to an OnStar Advisor who can contact emergency service providers, direct them to your exact location, and relay vital information.

With OnStar Crisis Assist, specially trained OnStar Advisors are available 24 hours a day, 7 days a week, to provide a central point of contact, assistance, and information during a crisis.

With Roadside Assistance, OnStar Advisors can locate a nearby service provider to help with a flat tire or a battery jump.

## Security

If equipped, OnStar provides these services:

- Stolen Vehicle Assistance: OnStar Advisors can use GPS to locate the vehicle and help authorities quickly recover it.
- Remote Ignition Block: OnStar can block the vehicle from restarting.
- Stolen Vehicle Slowdown: OnStar can work with law enforcement to gradually slow the vehicle down.

### Theft Alarm Notification

When the vehicle alarm system is armed and the alarm is activated, an alert by text, email, or app push notification is sent. If the vehicle is stolen, an OnStar Advisor can work with authorities to recover the vehicle.

# OnStar Additional Information

### In-Vehicle Audio Messages

Audio messages may play important information at the following times:

- Prior to vehicle purchase. Press Oh to set up an account.
- After change in ownership.
- Periodically to verify vehicle connectivity status.

### Transferring Service

Press Oh to request account transfer eligibility information. The OnStar Advisor can cancel or change account information.

### Selling/Transferring the Vehicle

Call 1-888-4ONSTAR (1-888-466-7827) immediately to terminate your OnStar or connected services if the vehicle is disposed of, sold, transferred, or if the lease ends.

NOT FOR RESALE



### Reactivation for Subsequent Owners

Press and follow the prompts to speak to an OnStar Advisor as soon as possible. The OnStar Advisor will update vehicle records and explain OnStar or connected service options.

### How OnStar Service Works

Automatic Crash Response, Emergency Services, Crisis Assist, Stolen Vehicle Assistance, Remote Services, and Roadside Assistance are available on most vehicles. Not all OnStar services are available everywhere or on all vehicles. For more information, a full description of OnStar services, system limitations, and OnStar User Terms, Privacy Statement, and Software Terms:

- Call 1-888-4ONSTAR (1-888-466-7827).
- See www.onstar.com (U.S.).
- See www.onstar.ca (Canada).
- Call TTY 1-877-248-2080.
- Press to speak with an OnStar Advisor.

OnStar or connected services cannot work unless the vehicle is in a place where OnStar has an agreement with a wireless service provider for service in that area. The wireless service provider must also have coverage, network capacity, reception, and technology compatible with OnStar or connected services. Service involving location information about the vehicle cannot work unless GPS signals are available, unobstructed, and compatible with the OnStar hardware. OnStar or connected services may not work if the OnStar equipment is not properly installed or it has not been properly maintained. If equipment or software is added, connected, or modified, OnStar or connected services may not work. Other problems beyond the control of OnStar — such as hills, tall buildings, tunnels, weather, electrical system design and architecture of the vehicle, damage to the vehicle in a crash, or wireless phone network congestion or jamming — may prevent service.

### Services for People with Disabilities

OnStar Advisors provide services to help with physical disabilities and medical conditions.

Press to help:

- Find a hotel, restaurant, etc., that meets accessibility needs.
- Provide directions to the closest hospital or pharmacy in urgent situations.

### TTY Users

OnStar has the ability to communicate to deaf, hard-of-hearing, or speech-impaired customers while in the vehicle. If equipped, the TTY system provides in-vehicle access to all OnStar services, except OnStar Turn-by-Turn Navigation.

Turn your vehicle on and keep it in P (Park). From the infotainment apps screen, access TTY by touching Settings > Apps > Phone > TTY > Enable OnStar TTY mode. When TTY mode is active, you can make and receive phone calls using the infotainment display.

### OnStar Personal Identification Number (PIN)

A PIN is needed to access some OnStar services. The PIN will need to be changed the first time when speaking with an OnStar Advisor. To change the OnStar PIN, contact an OnStar Advisor by pressing or calling 1-888-4ONSTAR.

### Warranty

OnStar equipment may be warranted as part of the vehicle warranty.

NOT FOR RESALE



### Languages

The vehicle can be programmed to respond in multiple languages. Press and ask for an OnStar Advisor. OnStar Advisors are available in English, Spanish, and French. Available languages may vary by country.

### Potential Issues

OnStar cannot perform Remote Door Unlock or Stolen Vehicle Assistance after the vehicle has been off continuously for an extended period of time without being started. To find out the duration of time that applies for the vehicle, contact an OnStar Advisor by pressing or calling 1-888-4ONSTAR. If the vehicle has not been started for an extended period of time, OnStar can contact Roadside Assistance or a locksmith to help gain access to the vehicle.

### Global Positioning System (GPS)

- Obstruction of the GPS can occur in a large city with tall buildings; in parking garages; around airports; in tunnels and underpasses; or in an area with very dense trees. If GPS signals are not available, the OnStar system should still operate to call OnStar. However, OnStar could have difficulty identifying the exact location.
- In emergency situations, OnStar can use the last stored GPS location to send to emergency responders.

A temporary loss of GPS can cause loss of the ability to send a Turn-by-Turn Navigation route. The OnStar Advisor may give a verbal route or may ask for a call back after the vehicle is driven into an area with greater access to GPS signal.

### Cellular and GPS Antennas

Cellular reception is required for OnStar to send remote signals to the vehicle. Do not place items over or near the antenna to prevent blocking cellular and GPS signal reception.

### Unable to Connect to OnStar Message

If there is limited cellular coverage or the cellular network has reached maximum capacity, this message may come on. Press to try the call again or try again after driving a few miles into another cellular area.

### Vehicle and Power Issues

OnStar services require a vehicle electrical system, wireless service, and GPS satellite technologies to be available and operating for features to function properly. These systems may not operate if the battery is discharged or disconnected.

### Add-on Electrical Equipment

The OnStar system is integrated into the electrical architecture of the vehicle. Do not add any electrical equipment. See *Add-On Electrical Equipment* ⇨ *248*. Added electrical equipment may interfere with the operation of the OnStar system and cause it to not operate.

### Vehicle Software Updates

OnStar or GM may remotely deliver software updates or changes to the vehicle without further notice or consent. These updates or changes may enhance or maintain safety, security, or the operation of the vehicle or the vehicle systems. Software updates or changes may affect or erase data or settings that are stored in the vehicle, such as saved navigation destinations or pre-set radio stations. Neither OnStar nor GM is responsible for any affected or erased data or settings. These updates or changes may also collect personal information. Such collection is described in the OnStar Privacy Statement or separately disclosed at the time of installation. These updates

NOT FOR RESALE



or changes may also cause a system to automatically communicate with GM servers to collect information about vehicle system status, identify whether updates or changes are available, or deliver updates or changes. An active OnStar agreement constitutes consent to these software updates or changes and agreement that either OnStar or GM may remotely deliver them to the vehicle.

### Connected Services Privacy Statement

The complete OnStar Privacy Statement may be found at www.onstar.com (U.S.), or www.onstar.ca (Canada). We recommend that you review it. If you have any questions, call 1-888-4ONSTAR (1-888-466-7827) or press to speak with an OnStar Advisor. Users of wireless communications are cautioned that the privacy of any information sent via wireless cellular communications cannot be assured. Third parties may unlawfully intercept or access transmissions and private communications without consent.

### OnStar – Software Acknowledgements

To obtain the source code under GPL, LGPL, MPL, and other open source licenses, that is contained in this product, please visit www.opensourceautomotive.com/an/GM. In addition to the source code, all referred license terms, warranty disclaimers, and copyright notices are available for download. This offer is valid for a period of three years after our last shipment of this product. This offer is valid to anyone in receipt of this information.

*Provided through Aumovio, Inc., who is solely responsible for provisions of related OSS compliance.

NOT FOR RESALE



# Connected Services

**Connected Services**
Navigation ..... 349
Connections ..... 349
Diagnostics ..... 350

**Vehicle Updates**
How Your Vehicle is Updated ..... 351
Vehicle Update Additional Information ... 351

## Navigation

Connected navigation services enable you to use the vehicle's mobile app or an OnStar Advisor to get route guidance.

If equipped, you can send destinations from the myBuick mobile app to the Turn-by-Turn or built-in navigation system.

An active OnStar or connected services plan is required. Services vary by model. Map coverage is available in the United States (www.onstar.com) and Canada (www.onstar.ca).

### Turn-by-Turn Navigation

OnStar Turn-by-Turn Navigation provides voice-guided driving directions using GPS technology.

To get directions, push the Blue OnStar button and request Turn-by-Turn directions. The OnStar Virtual Assistant will send detailed directions to the Turn-by-Turn Navigation system.

Automated voice-guided directions will take you to your set destination.

If you are in an area where Turn-by-Turn is not available, push to speak to an OnStar Advisor. The OnStar Advisor will be able to give real-time navigation instructions.

### Destination Download

If equipped, OnStar can send directions to the vehicle's built-in navigation system. Press , then ask the OnStar Virtual Assistant to download directions to the built-in navigation system.

After the navigation session is downloaded, the navigation screen will provide prompts to begin driving directions.

Downloaded routes can only be canceled through the built-in navigation system.

## Connections

The following services allow you to monitor your vehicle status, manage your vehicle Wi-Fi services, and safeguard your personal data.

For coverage maps, see www.onstar.com (U.S.) or www.onstar.ca (Canada).

NOT FOR RESALE



### Wi-Fi Hotspot

If equipped, the built-in Wi-Fi hotspot provides 5G access to in-vehicle experiences such as navigation apps, voice assistance, audio and visual HD streaming apps in select vehicles. Multiple devices can be connected. A data plan is required.

Only use the in-vehicle controls when it is safe to do so. See *Distracted Driving* ⇨ *165*.

To retrieve Wi-Fi hotspot information, select the Wi-Fi Hotspot icon on the infotainment app screen.

The Wi-Fi settings will display:

- The Wi-Fi hotspot name (Service Set Identifier) and password.
- The connection type (no Internet connection, 4G, 4G LTE, 5G) and signal quality (poor, good, excellent), if equipped.

The connection type icon may not illuminate even though the vehicle has an active connection.

Connect with an OnStar Advisor to edit the Wi-Fi hotspot name or password. See *OnStar Overview* ⇨ *344*. On some vehicles, you can edit the Wi-Fi hotspot name and password in the Wi-Fi Hotspot menu.

After initial setup, the Wi-Fi hotspot will connect automatically to your mobile devices.

Manage data usage by turning Wi-Fi on or off on your mobile device, using the myBuick mobile app, or by contacting an OnStar Advisor.

### myBuick App

To remotely connect to your vehicle, download the myBuick mobile app to a compatible Apple or Android device. For specific app features, see my.buick.com.

To use the app, you will need:

- An active OnStar or connected services plan.
- A compatible mobile device.
- Factory-installed remote start and power door locks.

Data rates apply.

See www.buick.com or www.onstar.com for details and system limitations.

### Security Best Practices

To protect your personal data:

- Change the default password for the myBuick mobile app. Use a combination of letters and numbers to increase the security.
- Change the Wi-Fi hotspot name (Service Set Identifier) and password. The Service Set Identifier is your network's name that is visible to other wireless devices. Choose a unique name and avoid family names or vehicle descriptions.

## Diagnostics

#### OnStar's Vehicle Diagnostics

If equipped and enabled, OnStar's Vehicle Diagnostics monitors and reports on the health of your vehicle's central operating systems. Capabilities vary by model. See www.onstar.com (U.S.) or www.onstar.ca (Canada) for details and system limitations.

#### myBuick App

You can remotely check your vehicle status through the myBuick app.

Features are subject to change. For updates on feature capabilities, see www.buick.com/owners. Message and data rates may apply.

NOT FOR RESALE



# Vehicle Updates

## How Your Vehicle is Updated

If equipped, the vehicle can download and install select software updates over a wireless connection. The system will prompt for certain updates to be downloaded and/or installed.

To manually check for updates, select Settings > Updates. Follow the on-screen prompts to download and/or install the update. The steps to check for, download, and install updates may vary by vehicle.

During the software download, the vehicle can be used normally. Once the download is complete, the vehicle may prompt you to install when shifting into P (Park).

During the software installation, the vehicle will be disabled and cannot be driven. The system will show the installation progress and will notify you of success or failure once the installation is complete.

Your vehicle must be connected to the internet to download Over-the-Air vehicle software updates, which can be accessed through the vehicle's built-in internet connection. If required, data plans are provided by a third party. A secure Wi-Fi hotspot such as a compatible mobile, home, or public hotspot can be used. Applicable data rates may apply.

To connect the infotainment system to a secured hotspot, select Settings > Connections > Wi-Fi Networks. Select the appropriate Wi-Fi network and follow the on-screen prompts.

Download speeds may vary. On most compatible mobile devices, activation of the Wi-Fi hotspot is in the Settings menu under Mobile Network Sharing, Personal Hotspot, Mobile Hotspot, or similar. Availability of Over-the-Air software updates varies by vehicle and country. Features are subject to change.

For more information on this feature, see *Online Account and Customer Support* ⇨ *335*.

## Vehicle Update Additional Information

If you have accepted the terms and conditions and have an active connected services package for your vehicle, GM may remotely deliver software updates or changes to the vehicle without further notice or consent. These updates or changes may enhance or maintain safety, security, or the operation of the vehicle or the vehicle systems. Software updates or changes may affect or erase data or settings that are stored in the vehicle, such as saved navigation destinations or pre-set radio stations. GM is not responsible for any affected or erased data or settings. These updates or changes may also collect personal information. Such collection is described in the privacy statement or separately disclosed at the time of installation. These updates or changes may also cause a system to automatically communicate with GM servers to collect information about vehicle system status, identify whether updates or changes are available, or deliver updates or changes. An active connectivity agreement constitutes consent to these software updates or changes and agreement that GM may remotely deliver them to the vehicle.

### Data Download

If the vehicle is equipped with and has an active connected services plan, additional data may be collected through the connected services system. This includes information about: the vehicle's operation, a crash involving the vehicle, the use of the vehicle and its features, and, in certain situations, the location and approximate GPS speed of the

NOT FOR RESALE



vehicle. Refer to the Terms and Conditions and Privacy Statement on the website. See www.buick.com.

**Wireless Configuration**

Export of this vehicle to another region may require reset of internal settings for wireless communication configuration to ensure regulatory compliance or enable connectivity. See your dealer. The end-user of the device does not have an option to modify the regulatory wireless configuration.

NOT FOR RESALE



# Index

## A


Accessories and Modifications..... 250
Accessory Power..... 180
Adaptive
  Cruise Control..... 110, 191
Additional
  OnStar Information..... 345
Add-On Electrical Equipment..... 248
Advanced
  Driver Assistance Systems..... 216
Agreements
  Trademarks and License..... 154
Aiming
  Headlight, Front..... 269
Air
  Cleaner/Filter, Engine..... 257
  Filter Life System..... 256
  Filter, Passenger Compartment..... 162
  Vents..... 161
Airbags
  Adding Equipment to the Vehicle..... 63
  How Does an Airbag Restrain?..... 57
  Passenger Sensing System..... 59
  Passenger Status Indicator..... 101
  Readiness Light..... 101
  Replacing System Parts after a Crash..... 64
  Servicing Airbag-Equipped Vehicles..... 62
  System..... 54
  System Check..... 63
  What Makes an Airbag Inflate?..... 57
  What Will You See after an Airbag Inflates?..... 58
  When Should an Airbag Inflate?..... 56
  Where Are the Airbags?..... 55
Alarm
  Vehicle Security..... 23
Alert
  Blind Zone Steering Assist (BZSA)..... 238
  Lane Change (LCA)..... 236
  Rear Cross Traffic..... 226
  Rear Pedestrian..... 225
All-Season Tires..... 281
All-Wheel Drive..... 185, 266
  Light..... 105
Ambient Lighting..... 127
AM-FM Radio..... 133
Antenna
  Multi-band..... 135
Antilock Brake System (ABS)..... 186
  Warning Light..... 105
Appearance Care
  Exterior..... 311
  Interior..... 315
Apple CarPlay and Android Auto..... 147
Assistance
  Program, Roadside..... 336

NOT FOR RESALE



Assistance Systems
Advanced... 216
Automatic Emergency Braking (AEB)... 230
Automatic Parking Assist (APA)... 222
Blind Zone Steering (BZSA)... 238
Driver Attention... 240
Driving... 228
Forward Collision Alert (FCA) System... 228
Front Pedestrian Braking (FPB)... 234
Lane Change Alert (LCA)... 236
Lane Keep Assist (LKA)... 241
Parking... 220
Parking and Backing... 218
Rear Cross Traffic Alert (RCTA)... 226
Rear Pedestrian Alert... 225
Rear Vision Camera (RVC)... 218
Reverse Automatic Braking (RAB)... 224
Surround Vision Recorder... 243
Surround Vision System... 219
Traffic Sign... 239
Assistant, Voice... 140, 141
Audio
Bluetooth... 136
Automatic
Dimming Mirrors... 26
Door Locks... 16
Emergency Braking (AEB) Disabled Light... 106
Parking Assist (APA)... 222
Transmission... 181
Transmission Fluid... 256
Vehicle Hold (AVH)... 188
Automatic Transmission
Manual Mode... 184
Auto Stop
Indicator... 109
Avoiding Untrusted Media Devices... 135

## B

Battery
Exterior Lighting Battery Saver... 128
Jump Starting... 305
Load Management... 127
Power Protection... 128
Battery - North America... 265
Blade Replacement, Wiper... 266
Bluetooth
Audio... 136
Overview... 142, 143
Brake
Pad Life System... 263
Brakes... 262
Antilock... 186
Brake Assist... 187
Electric Brake Boost... 185
Electric Parking Brake... 186
Fluid... 264
System Warning Light... 104
Braking... 166
Automatic Emergency (AEB)... 230
Front Pedestrian (FPB) System... 234
Post-Collision... 187
Reverse Automatic... 224
Break-In, New Vehicle... 175
Buckle To Drive... 47
Buying New Tires... 293

## C

Calibration
Compass... 93
California
Perchlorate Materials Requirements... 250
Proposition 65 Warning... 1
Warranty Information... 333
Camera
Rear Vision (RVC)... 218
Canadian Vehicle Owners... 2
Capacities and Specifications... 329
Carbon Monoxide
Engine Exhaust... 180
Liftgate... 18
Winter Driving... 170
Cargo
Management System... 85
Tie-Downs... 85
Caution, Danger, and Warning... 2

NOT FOR RESALE



Center
Console, Storage... 85
Chains and Other Traction Devices
Tire... 297
Charging
System Light... 102
Charging Phone
Wireless... 94
Child Restraints
Infants and Young Children... 66
Lower Anchors and Tethers for Children... 72
Older Children... 64
Securing... 79, 81
Systems... 68
Where to Put... 70
Child Safety Locks... 16
Circuit Breakers... 270
Cleaning
Exterior Care... 311
Interior Care... 315
Climate Control Systems
Dual Automatic... 157
Rear... 160
Clock... 93
Setting... 149
Cluster, Instrument... 97
Collision Alert
Forward (FCA) System... 228
Collision Damage Repair... 339
Compact Spare Tire... 304
Compartments
Storage... 84
Compass... 93
Connected Services
Connections... 349
Diagnostics... 350
Navigation... 349
Connections
Connected Services... 349
Control
of a Vehicle... 166
Traction and Electronic Stability... 188
Controls
Headlight... 121
Steering Wheel... 131
Convex Mirrors... 24
Coolant
Engine Temperature Gauge... 99
Engine Temperature Warning Light... 107
Cooling System... 258
Cornering Lights... 125
Courtesy Transportation Program... 338
Cruise Control
Adaptive... 191
Light... 110
Super... 201
Cupholders... 84
Customer Assistance
Offices... 335
Text Telephone (TTY) Users... 335
Customer Information
Publications Ordering Information... 340
Customer Satisfaction Procedure... 331
Customer Support
and Online Account... 335
Cybersecurity... 342

## D

Damage Repair, Collision... 339
Danger, Warning, and Caution... 2
Dashboard... 5
Data Collection
Infotainment System... 343
OnStar... 343
Data Recorders, Event... 342
Daytime Running Lights... 123
Defensive Driving... 166
Delayed
Locking... 15
Destination... 138
Diagnostics
Connected Services... 350
Digital
Key... 17
Disabled Vehicle
Transporting... 307

NOT FOR RESALE



Distracted Driving..... 165
Dome Lights..... 125
Door
  Ajar Light..... 111
  Delayed Locking..... 15
  Locks..... 14
  Power Locks..... 15
Drive Belt Routing, Engine..... 330
Driver
  Assistance Systems, Advanced..... 216
  Attention Assist..... 240
  Information Center (DIC)..... 111
  Mode Control..... 190
  Mode Control Light..... 108
  Teen..... 151
Drive Systems
  All-Wheel Drive..... 185, 266
Driving
  Assistance Systems..... 228
  Defensive..... 166
  for Better Fuel Economy..... 165
  Hill and Mountain Roads..... 170
  If the Vehicle is Stuck..... 171
  Impaired..... 166
  Loss of Control..... 168
  Off-Road..... 168
  Off-Road Recovery..... 167
  Vehicle Load Limits..... 172
  Wet Roads..... 169
  Winter..... 170
Dual
  Automatic Climate Control System..... 157

## E

Electric
  Brake Boost..... 185
  Parking Brake..... 186
  Parking Brake Light..... 104
Electrical
  Equipment, Add-On..... 248
Electrical System
  Engine Compartment Fuse Block..... 271
  Fuses and Circuit Breakers..... 270
  Instrument Panel Fuse Block..... 274
  Overload..... 269
  Rear Compartment Fuse Block..... 277
Electronic Stability Control (ESC) Off
  Light..... 107
Emergency
  OnStar..... 345
Engine
  Air Cleaner/Filter..... 257
  Air Filter Life System..... 256
  Check Light (Malfunction Indicator)..... 102
  Compartment Overview..... 253
  Coolant Temperature Gauge..... 99
  Coolant Temperature Warning Light..... 107
  Cooling System..... 258
  Drive Belt Routing..... 330
  Exhaust..... 180
  Heater..... 179
  Oil Life System..... 256
  Oil Pressure Light..... 109
  Overheating..... 261
  Power Messages..... 117
  Running While Parked..... 181
  Starting..... 177
Entry Lighting..... 126
Event Data Recorders..... 342
Exit Lighting..... 127
Extended Parking..... 180
Extender, Seat Belt..... 52
Exterior
  Lighting Battery Saver..... 128

## F

Filter
  Engine Air Cleaner..... 257
Flashers, Hazard Warning..... 124
Flat Tire..... 297
  Changing..... 298
Floor Mats..... 318
Fluid
  Automatic Transmission..... 256
  Brakes..... 264
  Washer..... 262

NOT FOR RESALE



Folding Mirrors..... 25
Frequency Statement
Radio..... 341
Fuel
Recommended..... 244
Additives..... 245
Economy, Driving for Better..... 165
Filling a Portable Fuel Container..... 247
Filling the Tank..... 245
Foreign Countries..... 245
Gauge..... 99
Low Fuel Warning Light..... 109
Prohibited Fuels..... 244
Top Tier..... 244
Fuses
Engine Compartment Fuse Block..... 271
Fuses and Circuit Breakers..... 270
Instrument Panel Fuse Block..... 274
Rear Compartment Fuse Block..... 277

## G

Garage Door Opener
Programming..... 117
Gas Strut(s)..... 268
Gauges
Engine Coolant Temperature..... 99
Fuel..... 99
Odometer..... 98
Speedometer..... 98
Tachometer..... 98
Trip Odometer..... 98
Warning Lights and Indicators..... 96
General Information
Service and Maintenance..... 320
Towing..... 247
Vehicle Care..... 250
Global Positioning System (GPS)..... 139
Glove Box..... 84
GM Mobility Reimbursement Program..... 336
Guidance
Problems with the Route..... 140

## H

Hazard Warning Flashers..... 124
Headlights
Aiming, Front..... 269
Controls..... 121
High-Beam On Light..... 110
Off Reminder..... 123
System, Automatic..... 123
Head Restraints..... 33
Head-Up Display (HUD)..... 115
Heated
and Ventilated Front Seats..... 39
Mirrors..... 26
Rear Seats..... 43
Steering Wheel..... 90
Heater
Engine..... 179
High-Beam
On Light..... 110
Systems..... 122
High-Speed Operation..... 286
Hill
and Mountain Roads..... 170
Start Assist (HSA)..... 188
Hood..... 251
Horn..... 91
How to Wear Seat Belts Properly..... 47
How Your Vehicle is Updated..... 351

## I

If a Crash Occurs..... 339
Ignition Positions..... 176
Immobilizer Operation..... 24
Indicators
Auto Stop..... 109
Pedestrian Ahead..... 106
Vehicle Ahead..... 106
Warning Lights and Gauges..... 96
Infants and Young Children, Restraints..... 66
Information
Publication Ordering..... 340
Infotainment
Using the System..... 131

NOT FOR RESALE



Inspection
Multi-Point Vehicle..... 323
Instrument
Cluster..... 97
Instrument Panel Overview..... 5
Interior
Rearview Mirrors..... 26
Introduction..... 2, 129

## J

Jump
Starting..... 305

## K

Keys..... 7
Digital..... 17
Remote..... 8
Remote Operation..... 8

## L

Labeling, Tire Sidewall..... 281
Lane
Keep Assist Light..... 105
Lap-Shoulder Belt..... 49
LATCH System
Replacing Parts after a Crash..... 79
LED Lighting..... 269
Liftgate..... 18
Lighting
Ambient..... 127
Entry..... 126
Exit..... 127
Illumination Control..... 125
LED..... 269
Lights
Adaptive Cruise Control..... 110
Airbag Readiness..... 101
All-Wheel-Drive..... 105
Antilock Brake System (ABS) Warning..... 105
Automatic Emergency Braking (AEB) Disabled..... 106
Automatic Vehicle Hold (AVH)..... 105
Brake System Warning..... 104
Charging System..... 102
Cornering..... 125
Cruise Control Light..... 110
Daytime Running..... 123
Dome..... 125
Door Ajar..... 111
Driver Mode Control..... 108
Electric Parking Brake..... 104
Electronic Stability Control (ESC), Off..... 107
Engine Coolant Temperature Warning..... 107
Engine Oil Pressure..... 109
Exterior Lighting Battery Saver..... 128
Gauges and Indicators..... 96
High-Beam On..... 110
Lane Keep Assist..... 105
Low Fuel Warning..... 109
Malfunction Indicator (Check Engine)..... 102
On Reminder..... 110
Reading..... 126
Seat Belt Reminders..... 100
Security..... 109
Service Electric Parking Brake..... 104
Super Cruise..... 111
Tire Pressure..... 108
Traction Control System (TCS)/ Electronic Stability Control Light..... 107
Traction Off..... 106
Locks
Automatic Door..... 16
Delayed Locking..... 15
Door..... 14
Lockout Protection..... 16
Power Door..... 15
Safety..... 16
Loss of Control..... 168
Lower Anchors and Tethers for Children (LATCH System)..... 72
Low Fuel Warning Light..... 109
Lumbar Adjustment
Front Seats..... 36

NOT FOR RESALE



## M


Maintenance
- Recommended Fluids and Lubricants.... 326
- Records.... 327
- Schedule.... 321

Manual
- Mode.... 184

Maps.... 137

Massage
- Seats.... 36

Media
- Avoiding Untrusted Devices.... 135

Memory Seats.... 37

Messages
- Engine Power.... 117
- Vehicle.... 116
- Vehicle Speed.... 117

Mirrors
- Automatic Dimming.... 26
- Automatic Dimming Rearview.... 26
- Convex.... 24
- Folding.... 25
- Heated.... 26
- Interior Rearview.... 26
- Manual Rearview.... 26
- Power.... 25
- Rear Camera.... 26

Modes
- Driver Control.... 190

Monitor System, Tire Pressure.... 286

Multi-band Antenna.... 135

Multi-Point Vehicle Inspection (MPVI).... 323


## N


Navigation
- Connected Services.... 349
- Destination.... 138
- Symbols.... 137
- Using the System.... 136

New Vehicle Break-In.... 175


## O


Odometer.... 98
- Trip.... 98

Off-Road
- Driving.... 168
- Recovery.... 167

Oil
- Engine.... 254
- Engine Oil Life System.... 256
- Pressure Light.... 109

Older Children, Restraints.... 64

Online Account and Customer Support.... 335

OnStar.... 343
- Additional Information.... 345
- Emergency.... 345
- Overview.... 344
- Security.... 345

Outlets
- Power.... 93

Overheating, Engine.... 261

Overview.... 130
- Instrument Panel.... 5


## P


Park
- Assist.... 218, 220

Parking
- Brake and P (Park) Mechanism Check.... 266
- Extended.... 180
- Over Things That Burn.... 180

Parking Assist
- Automatic.... 222

Parking or Backing
- Assistance Systems.... 218

Passenger
- Airbag Status Indicator.... 101
- Compartment Air Filter.... 162
- Sensing System.... 59

Pedestrian
- Ahead Indicator.... 106

Perchlorate Materials Requirements, California.... 250

NOT FOR RESALE



Phone
Apple CarPlay and Android Auto..... 147
Bluetooth..... 142, 143
Port
USB..... 135
Post-Collision Braking..... 187
Power
Door Locks..... 15
Mirrors..... 25
Outlets..... 93
Protection, Battery..... 128
Retained Accessory (RAP)..... 180
Seat Adjustment..... 34
Windows..... 29
Pregnancy, Using Seat Belts..... 52
Privacy
Vehicle Data Recording..... 342
Problems with Route Guidance..... 140
Program
Courtesy Transportation..... 338
Prohibited Fuels..... 244
Proposition 65 Warning
California..... 1
Publication Ordering Information..... 340

## Q

Québec Consumer Protection Act Disclosure
(Québec Customers Only)..... 2

## R

Radiator..... 258
Radio
AM-FM Radio..... 133
Frequency Statement..... 341
Reception..... 135
Satellite..... 134
Reading Lights..... 126
Rear
Camera Mirror..... 26
Climate Control System..... 160
Heated Seats..... 43
Seat Reminder..... 40
Window Washer/Wiper..... 92
Rearview Mirrors..... 26
Automatic Dimming..... 26
Reclining Seatbacks..... 35
Recommended
Fluids and Lubricants..... 326
Fuel..... 244
Recorder
Surround Vision..... 243
Records
Maintenance..... 327
Recreational Vehicle Towing..... 308
Reimbursement Program, GM Mobility..... 336
Reminder
Headlights Off..... 123
Lights On..... 110
Seat Belt..... 100
Remote
Key..... 8
Key Operation..... 8
Start..... 12
Replacement Parts
Airbags..... 64
Replacing
Airbag System..... 64
LATCH System Parts After a Crash..... 79
Seat Belt System Parts after a Crash..... 53
Reporting Safety Defects
Canadian Government..... 341
General Motors..... 342
U.S. Government..... 341
Retained Accessory Power (RAP)..... 180
Roads
Driving, Wet..... 169
Roadside Assistance Program..... 336
Roof
Rack System..... 88
Sunroof..... 30
Rotation
Tires..... 291
Routing, Engine Drive Belt..... 330
Running the Vehicle While Parked..... 181

NOT FOR RESALE



## S


Safety
- Locks... 16
- System Check... 53

Safety Defects Reporting
- Canadian Government... 341
- General Motors... 342
- U.S. Government... 341

Satellite Radio... 134
Scheduling Appointments... 338
Seat Belts... 46
- Buckle To Drive... 47
- Care... 53
- Extender... 52
- How to Wear Seat Belts Properly... 47
- Lap-Shoulder Belt... 49
- Reminders... 100
- Replacing after a Crash... 53
- Use During Pregnancy... 52

Seats
- Head Restraints... 33
- Heated and Ventilated, Front... 39
- Heated, Rear... 43
- Lumbar Adjustment, Front... 36
- Massage... 36
- Memory... 37
- Power Adjustment, Front... 34
- Rear Seat Reminder... 40
- Reclining Seatbacks... 35
- Second Row... 40
- Third Row Seat... 44

Secondary Collision Mitigation Braking... 187
Securing Child Restraints... 79, 81
Security
- Light... 109
- OnStar... 345
- Vehicle... 23
- Vehicle Alarm... 23

Service... 162
- Maintenance Records... 327
- Accessories and Modifications... 250
- Doing Your Own Work... 250
- Electric Parking Brake Light... 104
- Maintenance, General Information... 320
- Parts Identification... 328
- Scheduling Appointments... 338

Services
- Special Application... 324

Servicing the Airbag System... 62
Settings... 149
Signals, Turn and Lane-Change... 124
Spare Tire
- Compact... 304

Special Application Services... 324
Specifications and Capacities... 329
Speedometer... 98
Start
- Assist, Hill... 188
- Remote... 12

Starting the Engine... 177
Status
- Vehicle... 113

Steering... 167
- Heated Wheel... 90
- Wheel Adjustment... 90
- Wheel Controls... 131

Stop/Start System... 178
Storage
- Center Console... 85
- Compartments... 84
- Cupholders... 84
- Glove Box... 84
- Roof Rack System... 88
- Sunglasses... 84

Storage Areas
- Cargo Management System... 85

Struts
- Gas... 268

Stuck Vehicle... 171
Sunglass Storage... 84
Sunroof... 30
Sun Visors... 30
Super Cruise... 201
- Light... 111

NOT FOR RESALE



Surround
Vision System... 219
Symbols... 3
Navigation... 137
System
Brake Pad Life... 263
Engine Air Filter Life... 256
Global Positioning... 139
Systems
Airbag... 54
High Beam... 122
Infotainment, Data Recording... 343
Roof Rack... 88

## T

Tachometer... 98
Teen Driver... 151
Text Telephone (TTY) Users... 335
Theft-Deterrent Systems... 24
Tires... 280
All-Season... 281
Buying New Tires... 293
Chains and Other Traction Devices... 297
Changing... 298
Compact Spare... 304
Designations... 283
Different Size... 294
If a Tire Goes Flat... 297
Inspection... 291
Pressure... 285, 286
Pressure Light... 108
Pressure Monitor Operation... 287
Pressure Monitor System... 286
Rotation... 291
Sidewall Labeling... 281
Terminology and Definitions... 283
Uniform Tire Quality Grading... 295
Wheel Alignment and Tire Balance... 296
Wheel Replacement... 296
When It Is Time for New Tires... 292
Winter... 281
Top Tier Fuel... 244
Towing
General Information... 247
Recreational Vehicle... 308
Traction
Control System (TCS)/Electronic Stability Control Light... 107
Control/Electronic Stability Control... 188
Off Light... 106
Trademarks and License Agreements... 154
Traffic
Sign Assistant... 239
Transmission
Automatic... 181
Fluid, Automatic... 256
Transportation Program, Courtesy... 338
Transporting
a Disabled Vehicle... 307
Trip Odometer... 98
TTY Users
Customer Assistance... 335
Turn and Lane-Change Signals... 124

## U

Uniform Tire Quality Grading... 295
Universal Remote System
Operation... 119
Programming... 117
Updates
How Your Vehicle is Updated... 351
Vehicle Update Additional Information... 351
USB Port... 135
Using
Infotainment System... 131
Navigation System... 136

## V

Vehicle
Ahead Indicator... 106
Alarm System... 23
Automatic Hold... 188
Automatic Hold Light... 105
Canadian Owners... 2
Control... 166

NOT FOR RESALE




Data Recording and Privacy..... 342
Identification Number (VIN)..... 328
Load Limits..... 172
Messages..... 116
Positioning..... 139
Security..... 23
Speed Messages..... 117
Status..... 113
Symbols..... 3
Vehicle Care
Tire Pressure..... 285
Vehicle Update
Additional Information..... 351
Ventilation, Air..... 161
Visors..... 30
Voice
Assistant..... 140, 141


## W


Warning
Brake System Light..... 104
Caution and Danger..... 2
Hazard Flashers..... 124
Lights, Gauges, and Indicators..... 96
Warranty Information
California..... 333
Washer Fluid..... 262
Wheels
Alignment and Tire Balance..... 296
Different Size..... 294
Replacement..... 296
Where to Put the Restraint..... 70
Windows..... 28
Power..... 29
Windshield
Replacement..... 267
Wiper/Washer..... 91
Winter
Driving..... 170
Tires..... 281
Wiper
Blade Replacement..... 266
Rear Washer..... 92
Wireless Phone Charging..... 94

## Scan to Access

**United States**



**Canada**



Owner's Manuals
Warranty Information
Reference Guides
Links to GM Brand Websites
Many Additional Resources

Connected Services
1-888-4-ONSTAR

27Enclave_enUS_20342619B