GMC

2023



GMC Cutaway Chassis Limited Warranty and Owner Assistance Information

IMPORTANT: This booklet contains important information about your chassis cutaway chassis warranty coverage. It also explains **owner assistance information and GMC's participation in an Alternative Dispute Resolution Program.** Keep this information readily accessible and be prepared to make it available to a Chevrolet dealer if warranty work is needed.
Owner's Name:
Phone Number:
Street Address:
City & State:
Vehicle Identification Number (VIN):
Date Vehicle First Delivered or Put In Use:
Odometer Reading on Date Vehicle First Delivered or Put In Use:

NOTE: If delayed warranty start date applies, see your dealer for the delayed warranty start application. See "Delayed Warranty Start" under *Things to Know About the New Vehicle Limited Warranty* ⇨ *12* for more information.

© 2022 GMC, General Motors LLC. All rights reserved. Printed in the U.S.A. GENERAL MOTORS, GM, GMC, and the GMC emblem are registered trademarks of General Motors LLC.

Part No. 23GMC_Cutaway_WM_enUS_16588526A_2022AUG04_D

2023 GMC Cutaway Chassis Limited Warranty and Owner Assistance Information

Important Message to Owners... 1
GMC's Commitment to You 1
Owner Assistance 1
GM Participation in an Alternative Dispute Resolution Program 1
Warranty Service 1
Warranty Coverage at a Glance 2
New Vehicle Limited Warranty 4
What Is Covered 4
What Is Not Covered 8
Things to Know About the New Vehicle Limited Warranty 12
Warranty Repairs – Component Exchanges 12
Warranty Repairs – Recycled Materials 12
Tire Service 12
Delayed Warranty Start 12
Aftermarket Engine Performance Enhancement Products and Modifications 12
After-Manufacture "Rustproofing" 13
Paint, Trim, and Appearance Items 13
Chassis Operation and Care 13
Maintenance and Warranty Service Records 13
Chemical Paint Spotting 13
Warranty Coverage – Extensions 14
Warranty Service — Foreign Countries .. 14
Permanent Relocation 14
Original Equipment Alterations 14
Recreation Vehicle and Special Body or Equipment Alterations 15
Pre-Delivery Service 15
Production Changes 15
Normal Noise 15
Noise Emissions Warranty Light Duty Trucks Over 10,000 lbs Gross Vehicle Weight Rating (GVWR) Only 15
Emission Control Systems Warranty 16
What Is Covered 16
How to Determine the Applicable Emission Control System Warranty ... 16
Federal Emission Control System Warranty 16
California Emission Control System Warranty 16
Emission Warranty Parts List 19
Replacement Parts 22
Maintenance and Repairs 23
Claims Procedure 23
Customer Satisfaction Procedure 25
State Warranty Enforcement Laws 27
Warranty Information for California Only 28
Special Coverage Adjustment Programs Beyond the Warranty Period 29
Customer Assistance Offices 30
Customer Assistance for Text Telephone (TTY) Users 31
Roadside Assistance Program 32

GMC's Commitment to You

GMC is committed to ensuring an excellent ownership experience with your new GMC Cutaway Chassis.

Your GMC dealer also wants you to be completely satisfied and invites you to return for all your service needs, both during and after the warranty period. You should be aware that not all GMC dealers are equipped to service all chassis. If you are traveling or unable to return to your selling GMC chassis dealer for any reason, refer to *Roadside Assistance Program* ⇨ *32* for the telephone number to receive the name and location of the nearest GMC chassis service location.

Owner Assistance

Your GMC chassis dealer is best equipped to provide all of your service needs. Should you ever encounter a problem that is not resolved during or after the limited warranty period, talk to a member of dealer management. Under certain circumstances, GM and/or GM dealers may provide assistance after the limited warranty period has expired when the problem results from a defect in material or workmanship. These instances will be reviewed on a case-by-case basis. If your problem has not been resolved to your satisfaction, follow the *Customer Satisfaction Procedure* ⇨ *25*.

We thank you for choosing a GMC.

GM Participation in an Alternative Dispute Resolution Program

See *Customer Satisfaction Procedure* ⇨ *25* for information on the voluntary BBB Auto Line Program in which GM participates.

Warranty Service

The selling dealer has invested in the proper tools, training, and parts inventory to ensure that any necessary warranty repairs can be made to your vehicle. GM requests that the vehicle be returned to the selling dealer for all warranty repairs. If a situation or event occurs where you are significantly inconvenienced, an authorized GM dealer can make the warranty repairs. However, in the event the dealer is not able to perform the repair due to the special tool and training requirements, contact the *Customer Assistance Offices* ⇨ *30*. If you are unable to return to the selling dealer, contact a GM dealer in the United States for warranty service.

2 Warranty Coverage at a Glance

The warranty coverages are summarized as follows.

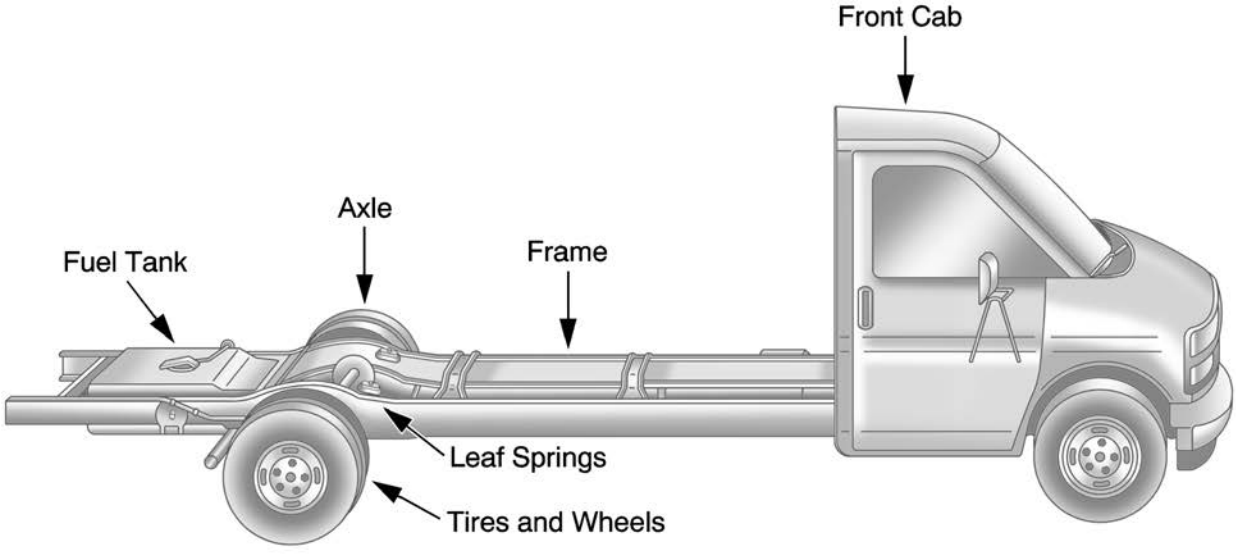

New Chassis Limited Warranty

Basic Cutaway Chassis Coverage (Includes Tires)

- The frame, brakes, steering, suspension, front cab sheet metal, instrument panel, and certain electrical components as supplied by GMC Division are covered for the first 3 years or 36,000 miles, whichever comes first.

Front Cab Sheet Metal

- Corrosion coverage is for the first 3 years or 36,000 miles, whichever comes first.
- Rust-through coverage is for the first 6 years or 100,000 miles, whichever comes first.

Powertrain Warranty

- Coverage is provided for 5 years or 60,000 miles, whichever comes first
- Certain commercial fleet and/or government fleet vehicles purchased under a qualifying fleet account number are covered for 5 years or 100,000 miles, whichever comes first.

Emission Control System Warranty*

*See "How to Determine the Applicable Emissions Control System Warranty" under *Emission Control Systems Warranty* ⇨ *16* for more information.

Federal

- Heavy duty gasoline truck emission control systems are covered for the first 5 years or 50,000 miles, whichever comes first.

California

- Defects and performance for medium duty truck emission control systems are covered for the first 5 years or 50,000 miles, whichever comes first. Specified components are covered for the first 7 years or 70,000 miles, whichever comes first.

Important: Some California emission vehicles may have special coverages longer than those listed here. See "California Emission Control System Warranty" under *Emission Control Systems Warranty* ⇨ *16*.

Noise Emissions

- Coverage is on applicable vehicles weighing over 10,000 lbs based on the Gross Vehicle Weight Rating (GVWR) only, for the entire life of the vehicle.

GM will provide for repairs to the cutaway chassis during the warranty period in accordance with the following terms, conditions, and limitations.

What Is Covered

Warranty Applies

This warranty is for GMC cutaway chassis which are registered in the United States and normally operated in the United States, and is provided to the original and any subsequent owners of the chassis during the warranty period.

Repairs Covered

The warranty covers repairs to correct any vehicle defect related to materials or workmanship occurring during the warranty period, excluding slight noise, vibrations, or other normal characteristics of the vehicle. Needed repairs will be performed using new, remanufactured, or refurbished parts.

No Charge

Cutaway chassis warranty repairs, including towing, parts and labor, will be made at no charge.

Obtaining Repairs

To obtain cutaway chassis warranty repairs, take the chassis to a participating GMC dealer facility within the warranty period and request the needed repairs.
A reasonable time must be allowed for the dealer to perform necessary repairs.

Warranty Period

The warranty period for all coverages begins on the date the chassis is first delivered or put in use and ends at the expiration of the coverage period.

For details regarding eligibility for a delay in the start of the warranty, see "Delayed Warranty Start" under *Things to Know About the New Vehicle Limited Warranty* ⇨ *12*.

Basic Cutaway Chassis Coverage

Cutaway chassis coverage includes the chassis, frame, brakes, steering, suspension, front cab, sheet metal, instrument panel, and certain electrical components, as supplied by GMC Division. These components are covered for 3 years or 36,000 miles, whichever comes first, except for other coverages listed here under "What Is Covered" and those items listed under "What Is Not Covered" later in this section.

The body company or tire manufacturer may provide warranty coverage in addition to the GMC chassis warranty coverage.

Powertrain Component Coverage

Coverage is for the first 5 years or 60,000 miles whichever comes first. Coverage for certain commercial fleet and/or government fleet vehicles is 5 years or 100,000 miles, whichever comes first. Please refer to your GMC dealer for details. Exceptions to the coverage are listed under "What is Covered" and those items listed under "What is Not Covered" later in this section.

Important: Some of these components may also be covered by the Emissions Warranty. See *Emission Warranty Parts List* ⇨ *19*.

Engine Coverage includes: Cylinder block and heads and all internally lubricated parts, timing gears, timing chain/belt and cover, valve covers, oil pump assembly, oil pan, engine oil cooling hoses and lines, seals, gaskets, manifolds, flywheel, water pump, engine mount, turbocharger and supercharger, actuators and electrical components internal to the engine.

Coverage on the engine cooling system begins at the inlet to the water pump and ends with the thermostat housing and/or outlet that attaches to the return hose.

Exclusions: Excluded from the powertrain component coverage are sensors, wiring, connectors, engine radiator, coolant hoses, coolant, heater core, starter motor, entire pressurized fuel system (in-tank fuel pump, pressure lines, fuel rail(s), regulator, injectors, and return line).

Transmission/Transaxle Coverage includes: All internally lubricated parts, case, torque converter, mounts, seals, and gaskets as well as any electrical components internal to the transmission/ transaxle. Also covered are any actuators directly connected to the transmission (slave cylinder, etc.).

Exclusions: Excluded from the powertrain component coverage are transmission cooling lines, hoses, radiator, sensors, wiring, and electrical connectors. Also excluded are the clutch and pressure plate.

Transfer Case Coverage includes: All internally lubricated parts, case, mounts, seals, and gaskets as well as any electrical components internal to the transfer case. Also covered are any actuators directly connected to the transfer case as well as encoder motor.

Exclusions: Excluded from the powertrain coverage are transfer case cooling lines, hoses, radiator, sensors, wiring, and electrical connectors as well as the transfer case control module and/or module programming.

Drive Systems Coverage includes: All internally lubricated parts, final drive housings, axle shafts and bearings, constant velocity joints, propeller shafts and universal joints. All mounts, supports, seals, and gaskets as well as any electrical components internal to the drive axle. Also covered are any actuators directly connected to the drive axle (e.g.,front differential actuator).

Exclusions: Excluded from the powertrain component coverage are all wheel bearings, drive wheel front and rear hub bearings, locking hubs, drive system cooling, lines, hoses, radiator, sensors, wiring, and electrical connectors related to drive systems as well as any drive system control module and/or module programming.

Restraint Systems Warranty

Provides repair or replacement needed to correct defects in materials or workmanship of any seatbelt or airbag system, supplied by General Motors. Coverage is for 6 years or 72,000 miles, whichever comes first. This warranty is subject to the exceptions indicated in the "What Is Not Covered" section or cosmetic appearance defects such as color fade.

Front Cab Sheet Metal Coverage:

Corrosion: Front cab sheet metal panels are covered against rust for 3 years or 36,000 miles, whichever comes first.

Rust Through: Any front cab sheet metal panel that rusts through (an actual hole in the sheet metal) is covered for up to 6 years or 100,000 miles, whichever comes first.

Important: Cosmetic, surface, or rust through corrosion (resulting from stone chips, scratches in the paint, or alteration) is not included in the front cab sheet metal coverage.

Tire Coverage

The tires supplied with your vehicle are covered by General Motors against defects in material or workmanship under the bumper-to-bumper warranty coverage. Wear-out is not considered a defect, and it may occur before the vehicle warranty expires. In this case, the owner is responsible to purchase replacement tires, or seek coverage solely from the tire manufacturer. For vehicles within the bumper-to-bumper warranty coverage, defective tires will be replaced on a prorated adjustment basis according to the following mileage-based schedule:

2022 GMC Tire Pro-Rate Chart

Mileage (mi)	Percent Covered by GMC (Tire Cost)	Percent Covered by GMC (Labor — Mount/Balance)
0-12,000	100%	100%
12,001-15,000	60%	100%
15,001-20,000	50%	100%
20,001-25,000	40%	100%
25,001-30,000	30%	100%
30,001-36,000	20%	100%
36,000 +	0%	0%

This schedule applies to the price of the tires only. GMC will cover 100% of the cost to mount and balance the tires replaced under warranty for the full bumper-to-bumper warranty period.

After your New Vehicle Limited Warranty expires, you may still have prorated warranty coverage on your original equipment tires by the tire manufacturer. Contact your GMC dealer or the tire manufacturer of the brand of tires on your vehicle for more information. The following is a list of current tire manufacturer's websites and toll-free customer assistance numbers.

Tire Companies

Company	Website	Toll-Free Number
Michelin/BF Goodrich	www.michelinman.com www.bfgoodrichtires.com	1-866-866-6605 1-877-788-8899
Hankook	www.hankooktire.com	1-800-426-5665
Kumho	www.kumhotire.com	1-800-445-8646
Maxxis	www.maxxis.com	1-866-509-7067

When a tire is removed from service due to a covered warranty condition under a tire manufacturer's limited warranty program, you may be eligible for a tire replacement or a comparable new tire on a prorated basis.

The tire manufacturer's limited warranty program, which can be obtained by calling or visiting the tire manufacturer's website or any authorized dealer, is in lieu of all other remedies or warranties, expressed or implied, arising by law or otherwise, including fitness for a particular purpose or merchantability. The tire manufacturers expressly disclaim liability for indirect, special, incidental, or consequential damages, lost profit, loss of business, loss of goodwill, loss of reputation, punitive or any other damage, cost, or loss of any kind.*

*Some states do not allow the exclusion or limitation of incidental or consequential damages, so the above limitations or exclusion may not apply to you.

Accessory Coverages

Most GM parts and accessories sold and permanently installed on a GM vehicle by a GM Dealer or GM approved Accessory Distributor/Installer (ADI) prior to delivery will be covered under the applicable portion (Bumper-to-Bumper, Powertrain, etc.) of the New Vehicle Limited Warranty. In the event GM accessories are installed after vehicle delivery, or are replaced under the New Vehicle Limited Warranty, they will be covered, parts and labor, for the balance of the applicable portion of the New Vehicle Limited Warranty, but in no event less than 12 months/unlimited miles.

GM accessories sold over the counter, or those not requiring installation, will receive the standard GM Accessories Warranty of 12 months from the date of purchase (parts only).

GM Licensed and Integrated Business Partner (IBP) Accessories are covered under the accessory-specific manufacturer's warranty and are not warranted by GM or its dealers.

Caution
This warranty excludes: Any communications device that becomes unusable or unable to function as intended due to unavailability of compatible wireless service or GPS satellite signals.

Towing

Towing is covered to the nearest GMC dealer if your chassis cannot be driven because of a warranted chassis defect.

What Is Not Covered

Tire and Wheel Damage or Wear

Normal tire wear or wear-out is not covered. Tire wear is influenced by many variables such as road conditions, driving styles, vehicle weight, and tire construction. Uniform tire wear is a normal condition, and is not considered a defect. Road hazard damage such as punctures, cuts, snags, and breaks resulting from pothole impact, curb impact, or from other objects is not covered. Tire wear due to misalignment beyond the warranty period is not covered. Also, damage from improper inflation, overloading, spinning, as when stuck in mud or snow, tire chains, racing, improper mounting or dismounting, misuse, negligence, alteration, improper repair, accident, collision, fire, vandalism, or misapplication is not covered. Damage to wheels or tire sidewalls caused by automatic car washes or cleaning agents is not covered.

Damage Due to Accident, Misuse, or Alteration

The New Vehicle Limited Warranty does not cover damage caused as the result of any of the following:

- Cutting, stretching, welding, or shrinking of chassis frame rails or driveline
- Addition of aftermarket suspension equipment such as tag axles, springs or spring helpers, spacer blocks, or air springs
- Addition of aftermarket engine and transmission modifications such as blowers, turbos, exhaust brakes, exhaust systems, air induction systems, computers (software or hardware modifications), governors, gear splitters, or electric braking devices
- Chassis overloading or uneven weight distribution
- Collision, fire, theft, freezing, vandalism, riot, explosion, or objects striking the chassis
- Misuse of the chassis such as driving over curbs, overloading, racing, or other competition. Proper chassis use is discussed in the owner manual.
- Alteration, modification or tampering to the vehicle including, but not limited to the body, chassis, powertrain, driveline, software, or other components after final assembly by GM.
- Coverages do not apply if the odometer has been disconnected, its reading has been altered, or mileage cannot be determined.
- Installation of non-GM (General Motors) parts
- Water or fluid contamination
- Damage resulting from hail, floods, windstorms, lightning and other environmental conditions.
- Alteration of glass parts by application of tinting films

Important: This warranty is void on chassis currently or previously titled as salvaged, scrapped, junked, or otherwise considered a total loss.

Front Suspension Alignment

The front suspension alignment should be checked and adjusted as necessary by the body company after final vehicle assembly has been completed. In some instances, it may be necessary for the owner to check and adjust the chassis alignment due to chassis loading after purchase. The need for a front suspension alignment is maintenance and is not covered under the terms of the New Cutaway Chassis Limited Warranty.

Damage or Corrosion Due to Environment, Chemical Treatments, or Aftermarket Products

Damage caused by airborne fallout, rail dust, salt from sea air, salt or other materials used to control road conditions, chemicals, tree sap, stones, hail, earthquake, water or flood, windstorm, lightning, the application of chemicals, or sealants subsequent to manufacture, etc., is not covered.

Damage Due to Insufficient or Improper Maintenance

Damage caused by failure to follow the recommended maintenance schedule intervals and/or failure to use or maintain proper fluids, or maintain fluids between recommended maintenance intervals, fuel, lubricants, or refrigerants recommended in the owner manual is not covered.

Damage Due to Contaminated, Improper, or Poor Quality Fuel

Poor fuel quality or incorrect fuel may cause driveability problems such as hesitation, lack of power, stalling, or failure to start. They may also degrade functionality of critical exhaust emissions components such as spark plugs, oxygen sensors, and the catalytic converter. Damage from poor fuel quality, water contamination, or if the vehicle requires premium fuel, operating the vehicle on gasoline with a Pump Octane less than a 91 (R+M)/2, may not be covered.

Prohibited fuels are: Gasolines containing any methanol, MMT, an organometallic octane enhancing additive, and/or fuels containing more than 15% ethanol in non-Flex Fuel Vehicles (FFV).

Please refer to your owner manual under "Fuel," for additional recommendations, including the use of TOP TIER Detergent Gasoline. Additional information can also be found at: www.toptiergas.com.

Damage Due to Impact, Use, or the Environment

Windshield or glass cracks, chips, or scratches due to impact are not covered. Windshield cracks will be covered for the first 12 months, regardless of mileage if caused by defects in material or workmanship.

Lights, lenses, mirrors, paint, grille, moldings, and trim are not covered for cracks, chips, scratches, dents, dings, and punctures or tears as a result of impact with other objects or road hazards. In addition, cracks, chips, scratches, or other damage to the face of a radio or instrument cluster from impact or foreign objects are not covered.

Third Party Externally Connected Electrical Products

This warranty does not apply to hardware or software of a third party device that is connected to the vehicle or its components, even if integrated or delivered with the vehicle. GM is not responsible for the quality or accuracy of any information, or service accessed through or from any third party device or platform. Software distributed by GM inside or outside the vehicle (including, but not limited to system software or applications) is not covered by

this Warranty. GM does not warrant that connections to, from or through the vehicle will be uninterrupted or error-free. Also, the user should back-up their data and information frequently. GM is not responsible for any loss or damage to data or information made available in connection with the use of the vehicle. In addition, this Warranty does not apply: (a) to consumable parts that are designed to diminish over time, unless failure has occurred due to a defect in materials or workmanship; (b) to damage caused by use with another product or service; (c) to damage caused by a third party device or service (including upgrades and expansions), or (d) to obsolescence or lack of utility due to incompatibility with future versions of external hardware or software, including, but not limited to mobile devices.

Maintenance

All vehicles require periodic maintenance. Maintenance services, such as those detailed in the owner manual are at the owners expense. Vehicle lubrication, cleaning, or polishing are not covered. Failure of or damage to components requiring replacement or repair due to vehicle use, wear, exposure, or lack of maintenance is not covered.

Items such as:

- Audio System Cleaning
- Brake Pads/Linings
- Clutch Linings
- Coolants and Fluids
- Filters
- Limited Slip Rear Axle Service
- Tire Rotation
- Wheel Balance
- Wiper Inserts

are covered by the New Vehicle Limited Warranty for up to 7,500 miles; any replacement after 7,500 miles is considered maintenance and is not covered as part of the New Vehicle Limited Warranty. Keyless Entry batteries (or other remote transmitter/receiver batteries) and exterior incandescent bulbs are covered for up to 12 months only; any replacement after 12 months is considered maintenance and is not covered as part of the New Vehicle Limited Warranty. The New Vehicle Limited Warranty only covers components when replacement or repair of these components is the result of a defect in material or workmanship.

Extra Expenses

Economic loss or extra expense is not covered.

Examples include:

- Inconvenience
- Lodging, meals, or other travel costs
- Loss of chassis use
- Payment for loss of time or pay
- State or local taxes required on warranty repairs
- Storage

Other Terms : This warranty gives you specific legal rights and you may also have other rights which vary from state to state.

GM does not authorize any person to create for it any other obligation or liability in connection with these vehicles. **Any implied warranty of merchantability or fitness for a particular purpose applicable to this chassis is limited in duration to the duration of this written warranty. Performance of repairs and needed adjustments is the exclusive remedy under this written warranty or any implied warranty. GM shall not be liable for**

incidental or consequential damages (such as, but not limited to, lost wages or vehicle rental expenses) resulting from breach of this written warranty or any implied warranty.*

* Some states do not allow limitations on how long an implied warranty will last or the exclusion or limitation of incidental or consequential damages, so the above limitations or exclusions may not apply to you.

Warranty Repairs – Component Exchanges

In the interest of customer satisfaction, GM may offer exchange service on some chassis components. This service is intended to reduce the amount of time your chassis is not available for use due to repairs. Components used in exchange are service replacement parts that may be new, remanufactured, or refurbished.

Remanufactured parts meet GM approved service part requirements and are made from previously used components in a process that involves disassembly, inspection, cleaning, update of software and replacement of parts as appropriate, testing and reassembly.

Refurbished parts meet GM approved service part requirements and are previously used parts that are inspected, cleaned, tested, and repackaged.

All exchange components used meet GM standards and are warranted the same as new components. Examples of the types of components that might be serviced in this fashion include: audio equipment, engine and transmission assemblies, instrument cluster assemblies, radios, compact disc players, batteries, and powertrain control modules.

Warranty Repairs – Recycled Materials

Environmental Protection Agency (EPA) guidelines and GM support the capture, purification, and reuse of automotive air conditioning refrigerant gases and engine coolant. As a result, any repairs GM may make to your chassis may involve the installation of purified reclaimed refrigerant and coolant.

Tire Service

Any GMC or tire dealer for your brand of tires can assist you with tire service. If, after contacting one of these dealers, you need further assistance or you have questions, contact the GMC Customer Assistance Center. The toll-free telephone numbers are listed under *Customer Assistance Offices* ⇨ *30*.

Delayed Warranty Start

Chassis that were originally sold to a body company for later sale to a retail owner may be eligible for a delayed warranty start. Warranty on chassis which have been approved for a delayed warranty start will commence at the date and mileage the chassis was sold to the first retail owner. The extension is from the original date of delivery to the body company up to:

- Chassis originally sold as commercial use: maximum extension of 12 months or 4,000 miles, whichever comes first.
- Chassis originally sold as recreational use: maximum extension of 24 months or 6,000 miles, whichever comes first.

Contact your selling commercial or recreational vehicle dealer to process a Delayed Warranty Start Application.

Important: Chassis put in demonstrator use are not eligible for a Delayed Warranty. The delayed warranty start is not valid unless approved by GMC.

Aftermarket Engine Performance Enhancement Products and Modifications

Some aftermarket engine performance products and modifications promise a way to increase the horsepower and torque levels of your vehicle's powertrain. You should be aware that these products may have detrimental effects on the performance and life of the engine, exhaust emission system, transmission, and drivetrain. The engine, transmission, and drivetrain have

been designed and built to offer industry leading durability and performance in the most demanding applications. Engine power enhancement products may enable the engine to operate at horsepower and torque levels that could damage, create failure, or reduce the life of the engine, engine emission system, transmission, and drivetrain. Damage, failure, or reduced life of the engine, transmission, emission system, drivetrain or other vehicle components caused by aftermarket engine performance enhancement products or modifications may not be covered under your vehicle warranty.

After-Manufacture "Rustproofing"

Your chassis was designed and built to resist corrosion. Application of additional rust-inhibiting materials is neither necessary nor required under the Front Cab Sheet Metal Coverage. GM makes no recommendations concerning the usefulness or value of such products.

Application of after-manufacture rustproofing products may create an environment which reduces the corrosion resistance built into your chassis. Repairs to correct damage caused by such applications are not covered under your New Cutaway Chassis Limited Warranty.

Paint, Trim, and Appearance Items

Defects in paint, trim, upholstery, or other appearance items are normally corrected during new chassis preparation. If you find any paint or appearance concerns, advise your dealer as soon as possible. Your owner manual has instructions regarding the care of these items.

Chassis Operation and Care

Considering your chassis investment, we know you will want to operate and maintain it properly. We urge you to follow the maintenance instructions contained in your owner manual.

If you have any questions on how to keep your chassis in good working condition, see your GMC dealer, the place many customers choose to have their maintenance work done. You can rely on your GMC dealer to use the proper parts and repair practices.

Maintenance and Warranty Service Records

Retain receipts covering performance of regular maintenance. Receipts can be very important if a question arises as to whether a malfunction is caused by lack of maintenance or a defect in material or workmanship.

A "Maintenance Record" is provided in the maintenance schedule section of the owner manual for recording services performed.

The servicing dealer can provide a copy of any warranty repairs for your records.

Chemical Paint Spotting

Some weather and atmospheric conditions can create a chemical fallout. Airborne pollutants can fall upon and adhere to painted surfaces on your vehicle. This damage can take two forms; blotchy, ring-shaped discolorations, and/or small irregular dark spots etched into the paint surface.

Although no defect in the factory applied paint causes this, GMC will repair, at no charge to the owner, the painted surfaces for the front cab sheet metal only, as included in the "Basic Cutaway Chassis Coverage" under *Things to Know About the New Vehicle Limited Warranty* ⇨ *12*, of new vehicles damaged by this fallout condition within 12 months or 12,000 miles of purchase, whichever comes first.

Warranty Coverage – Extensions

Time Extensions : The New Cutaway Chassis Limited Warranty will be extended one day for each day beyond the first 24 hour period in which your chassis is at an authorized dealer facility for warranty service. You may be asked to show the repair orders to verify the period of time the warranty is to be extended. Your extension rights may vary depending on state law.

Mileage Extensions : Prior to delivery, some mileage is put on your chassis during testing at the assembly plant, during shipping, and while at the dealer facility. The dealer records this mileage on the first page of this warranty booklet at delivery. For eligible chassis, this mileage will be added to the mileage limits of the warranty ensuring that you receive full benefit of the coverage. Mileage extension eligibility:

- Applies only to new chassis held exclusively in inventory.
- Does not apply to used chassis, GM owned chassis, dealer owned used chassis, or dealer demonstrator chassis.
- Does not apply to chassis with more than 1,000 miles on the odometer even though it may not have been registered for license plates.

Warranty Service — Foreign Countries

Touring Owner Service

If you are touring in a foreign country and repairs are needed, take your chassis to a GM dealer which sells and services GMC vehicles. However, if a GMC dealer cannot be located, significantly inconvenienced customers can take their vehicle to any GM dealer for repairs.

Important: Repairs made necessary by the use of improper or dirty fuels and lubricants are not covered under the warranty. See your owner manual for additional information on fuel requirements when operating in foreign countries.

Permanent Relocation

This warranty applies to GM vehicles registered in the United States and normally operated in the United States. If you have permanently relocated and established household residency in another country, GM may authorize the performance of repairs under the warranty authorized for vehicles generally sold by GM in that country. Contact an authorized GM dealer in your country for assistance.

Important: GM warranty coverages may be void on GM vehicles that have been imported/exported for resale.

Original Equipment Alterations

This warranty does not cover any damage or failure resulting from modification or alteration to the vehicle's original equipment as manufactured or assembled by General Motors. Examples of the types of alterations that would not be covered include cutting, welding, or disconnecting of the vehicle's original equipment parts and components.

Additionally, General Motors does not warranty non-GM parts, calibrations, and/or software modifications. The use of parts, control module calibrations, software modifications, and/or any other alterations not issued through General Motors will void the warranty coverage for those components that are damaged or otherwise affected by the installation of the non-GM part, control module calibration, software modification, and/or other alteration.

The only exception is that non-GM parts labeled “Certified to EPA Standards” are covered by the Federal Emissions Performance Warranty.

Recreation Vehicle and Special Body or Equipment Alterations

Installations, or alterations to the original equipment cutaway chassis, as manufactured and assembled by GM, are not covered by this warranty. The special body company (assembler) or equipment installer is solely responsible for warranties on the body or equipment and any alterations to any of the parts, components, systems, or assemblies installed by GM. Examples include, but are not limited to, special body installation (such as recreational vehicles), the installation of any non-GM part, cutting, welding, or the disconnecting of original equipment chassis parts and components, extension of the wheelbase, suspension and driveline modifications, and axle additions.

Pre-Delivery Service

Defects in the mechanical, electrical, and/or other components of your chassis may occur at the factory or while it is being transported to the dealer facility. Normally, any defects occurring during assembly are identified and corrected at the factory during the inspection process. In addition, dealers inspect each chassis before delivery. They repair any uncorrected factory defects and any transit damage detected before the chassis is delivered to the body builder or customer.

Any defects still present at the time the chassis is delivered to you are covered by the warranty. If you find any defects, advise your dealer without delay. For further details concerning any repairs which the dealer may have made prior to you taking delivery of your chassis, ask your dealer.

Production Changes

GM and GM dealers reserve the right to make changes in cutaway chassis built and/or sold by them at any time without incurring any obligation to make the same or similar changes on cutaway chassis previously built and/or sold by them.

Normal Noise

Some of the components within your GMC Cutaway Chassis will emit sound that may vary depending on final vehicle construction, layout, insulation, etc. Typical sounds may include, but are not limited to, air induction, exhaust system, brake noise, and axle and other driveline components. Sounds that do not affect the durability of your cutaway chassis are not covered under this warranty.

Noise Emissions Warranty Light Duty Trucks Over 10,000 lbs Gross Vehicle Weight Rating (GVWR) Only

GM warrants to the first person who purchases this chassis for purposes other than resale, and to each subsequent purchaser of this chassis that, as manufactured by GM, that this vehicle was designed, built, and equipped to conform at the time it left GM's control with all applicable United States EPA Noise Control Regulations.

This warranty covers this chassis as designed, built, and equipped by GM, and is not limited to any particular part, component, or system of the chassis manufactured by GM. Defects in design, or assembly, or in any part, component, or chassis system as manufactured by GM, which, at the time it left GM's control, caused noise emissions to exceed Federal Standards, are covered by this warranty for the life of the chassis.

The emission warranty on your vehicle is issued in accordance with the U.S. Federal Clean Air Act. Defects in material or workmanship in GM emission parts may also be covered under the *New Vehicle Limited Warranty* ⇨ *4*. In any case, the warranty with the broadest coverage applies.

What Is Covered

The parts covered under the emission warranty are listed under the *Emission Warranty Parts List* ⇨ *19*.

How to Determine the Applicable Emission Control System Warranty

State and Federal agencies may require a different a emission control system warranty for vehicles depending on:

- Whether the vehicle conforms to regulations applicable to light duty or heavy duty emission control systems
- Whether the vehicle or engine conforms to California regulations in addition to U.S. Environmental Protection Agency (EPA) Federal regulations

All vehicles are eligible for Federal Emissions Control System Warranty Coverage. If the emissions control label contains language stating the vehicle conforms to California regulations, the vehicle is also eligible for California Emissions Control System Warranty Coverage.

Federal Emission Control System Warranty

Federal Warranty Coverage is as follows:

- Light Duty Truck equipped with a Heavy Duty Gasoline Engine and with a Gross Vehicle Weight Rating (GVWR) greater than 8,500 lbs.
  - 5 years or 50,000 miles, whichever comes first.

Federal Emission Defect Warranty

GM warrants to the owner the following:

- The vehicle was designed, equipped, and built so as to conform at the time of sale with applicable regulations of the Federal Environmental Protection Agency (EPA)
- The vehicle is free from defects in materials and workmanship which cause the vehicle to fail to conform with those regulations during the emission warranty period

Emission-related defects in the genuine GM parts listed under the Emission Warranty Parts List are covered including; related diagnostic costs, parts, and labor are covered by this warranty.

California Emission Control System Warranty

This section outlines the emission warranty that GM provides for the vehicle in accordance with the California Air Resources Board. Defects in material or workmanship in GM emission parts may also be covered under the New Cutaway Chassis Limited Warranty coverage. In any case, the warranty with the broadest coverage applies.

This warranty applies if the vehicle meets both of the following requirements:

- The vehicle is registered in California **or other states adopting California emission and warranty regulations*.**
- The vehicle conforms to California regulations as indicated on the chassis emission control label.

Important: Connecticut, Delaware, Maine, Maryland, Massachusetts, New Jersey, New York, Oregon, Pennsylvania, Rhode Island, Vermont, and Washington have California Emissions Warranty coverage.

Your Rights and Obligations (For Vehicles Subject to California Exhaust Emission Standards)

The California Air Resources Board and General Motors are pleased to explain the emission control system warranty on your vehicle. In California, new vehicles must be designed, built, and equipped to meet the state's stringent anti-smog standards. GM must warrant the vehicle emission control system for the periods of time and mileage listed below provided there has been no abuse, neglect, or improper maintenance of your vehicle. The vehicle emission control system may include parts such as the fuel injection system, ignition system, catalytic converter, and engine computer. Also included are hoses, belts, connectors, and other emission-related assemblies.

Where a warrantable condition exists, GM will repair the vehicle at no cost to you including diagnosis, parts, and labor.

California Emission Defect and Emission Performance Warranty Coverage

- For vehicles with 14,000 lbs. GVWR or less, the period is for 3 years or 50,000 miles, whichever comes first:
  - If your vehicle fails a smog check inspection, GM will make all necessary repairs and adjustments to ensure that your vehicle passes the inspection. This is your Emission Control System Performance Warranty.
  - If any emission-related part on your vehicle is defective, GM will repair or replace it. This is your Short-term Emission Control System Defects Warranty.
- For 7 years or 70,000 miles whichever comes first:
  - If an emission-related part listed in this booklet specially noted with coverage for 7 years or 70,000 miles is defective, GM will repair or replace it. This is your Long-term Emission Control System Defects Warranty.
- For vehicles with greater than 14,000 lbs. GVWR, the period is:
  - 5 years or 50,000 miles with gasoline engine, whichever comes first.

Any authorized GMC dealer will, as necessary under these warranties, replace, repair, or adjust to GM specifications any genuine GM parts that affect emissions.

The applicable warranty period shall begin on the date the vehicle is delivered to the first retail purchaser.

Owner's Warranty Responsibilities

As the vehicle owner, you are responsible for the performance of the scheduled maintenance listed in your owner manual. GM recommends that you retain all maintenance receipts for the vehicle, but GM cannot deny warranty coverage solely for the lack of receipts or for your failure to ensure the performance of all scheduled maintenance.

You are responsible for presenting your vehicle to a GM dealer as soon as a problem exists. The warranted repairs should be completed in a reasonable amount of time, not to exceed 30 days.

As the vehicle owner, you should also be aware that GM may deny warranty coverage if your vehicle or a part has failed due to abuse, neglect, improper or insufficient maintenance, or modifications not approved by GM.

If you have any questions regarding your rights and responsibilities under these warranties, you should contact Customer Assistance Center at 1-800-462-8782 or, in California, write to:

State of California Air Resources Board
Mobile Source Operations Division
P.O. Box 8001
El Monte, CA 91731-2990

Emission-related defects in the emission parts listed here are covered under the Emission Control System Warranty. The terms are explained previously in this section under "Federal Emission Control System Warranty" and the "California Emission Control System Warranty."

Important: Certain parts may be covered beyond these warranties if shown with asterisk(s) as follows:

- (*) 7 years/70,000 miles, whichever comes first, California Emission Control System Warranty coverage.
- (**) 8 years/80,000 miles, whichever comes first, Federal Emission Control System Warranty coverage for light duty vehicles. (Also applies to California certified light duty vehicles.)

The Emission Control Systems Warranties obligations do not apply to conditions resulting from tampering, abuse, neglect, or improper maintenance; or any other item listed under "What Is Not Covered" in the *New Vehicle Limited Warranty* ⇨ *4*. The "Other Terms" presented in the *New Vehicle Limited Warranty* ⇨ *4* also apply to the emission-related warranties.

Powertrain Control System

Accelerator Pedal Position Sensor

Barometric Pressure Sensor

Camshaft Position Actuator *

Camshaft Position Actuator Valve

Communication Gateway Module (CGM) **

Coolant Sensor

Crankcase Pressure Sensor

Data Link Connector

Engine Control Module (ECM) **

Engine Temperature Sensor

Flex Fuel Sensor

Fuel Control Module **

Humidity Sensor

Intake Air Temperature Sensor

Malfunction Indicator Lamp

Manifold Absolute Pressure Sensor

Mass Air Flow Sensor

Oil Pressure Sensor

Outside Air Temperature Sensor

Oxygen Sensor(s)

NOx Sensor(s)

Powertrain Control Module (PCM) **

Supercharger Inlet Pressure Sensor

Thermostat

Throttle Position Sensor

Vehicle Speed Sensor

Ignition System

Camshaft Position Sensor(s)

Crankshaft Position Sensor(s)

Glow Plug(s) (Diesel)

Glow Plug Controller (Diesel)

Ignition Coil(s)

Ignition Control Module

Knock Sensor

Spark Plug Wires

Spark Plugs

Transmission Controls and Torque Management

Clutch Solenoids and Switches

Control Solenoids and Pressure Switches

Driver Mode Select Switch

ETRS Shifter/Button

Internal Mode Switch (IMS)

Park/Neutral Switch

Transmission Control Module **

Transmission Fluid Temperature Sensor

Transmission Range Control Module (TRCM) **

Transmission Speed Sensors

Vehicle Control System

Eboost Brake Control Module **

Integrated Chassis Control Module ** (ETRS and Corvette only)

Vehicle Control Module (VCM) **

Fuel Management System

AFM Exhaust Valves and Controller

Diesel Fuel Injection Pump *

Diesel Direct Fuel Injector and Rail *

HD Duramax Fuel Pressure Regulator *

HD Duramax Fuel Pipes *

Fuel Injector

Fuel Pressure Regulator

Fuel Pressure Sensor

Fuel Pump Power Module

Fuel Rail Assembly

Fuel Tank Fuel Pump

Fuel Temperature Sensor

High Pressure Fuel Pump (SIDI)

Air Management System

Active Aero Shutters and Controller

Air Cleaner

Air Intake Ducts

Charge Air Cooler *

Charge Air Cooler Control

Electric Compressor Recirculation Valve (eCRV)

Electric Waste Gate Actuator

Idle Air Control Valve

Idle Speed Control Motor

Intake Air Heater

Intake Manifold (* for diesel only)

Intake Manifold Gasket

Intake Manifold Tuning Valve

Supercharger *

Throttle Body

Turbocharger *

Turbocharger Pressure Sensor

Turbocharger Vane Position Sensor *

Turbocharger Vane Position Solenoid *

Variable Geometry Turbine (VGT) Actuators

Catalytic Converter System

Catalytic Converter(s) * **

Diesel Exhaust Emission Reduction Fluid (DEF) Tank

Diesel Exhaust Aftertreatment Actuators and Sensors

Diesel Particulate Filter (DPF) *

Exhaust Manifold and Gasket

Positive Crankcase Ventilation (PCV) System

Oil Filler Cap

PCV Filter

PCV Oil Separator

PCV Valve

Exhaust Gas Recirculation (EGR) System

EGR Bypass Valve

EGR Feed and Delivery Pipes

EGR Temperature Sensor

EGR Valve

EGR Valve Cooler *

Evaporative Emission Control System (Gasoline Engines)

Canister

Canister Vent Solenoid

Electronic Leak Check Pump (ELCP)

Fuel Feed and Purge Line

Fuel Filler Cap

Fuel Level Sensor

Fuel Tank(s) *

Fuel Tank Filler Pipe (with restrictor)

Fuel Tank Vapor and Liquid Pressure Sensor

Fuel Tank Zone Module

Purge Pump

Purge Valve

Start/Stop System

Auxiliary Battery or Ultra Capacitor

Battery Isolator

Battery Control Module

Bi-Directional DC-DC Converter

Intelligent Battery Sensor

Multifunction Power Supply Converter

Transmission Fluid Accumulator and Solenoid

Active Thermal Management

Block Rotary Valve

Body Control Module (BCM) **

Electric Coolant Pump

Engine Block Coolant Temperature Sensor

Engine Cylinder Head Coolant Temperature Sensor

Engine Inlet Coolant Temperature Sensor

Evaporator Air Temperature Sensor (EAT)

HVAC Front Blower Motor

HVAC Front Face Plate (FFP)

HVAC Front Mode/Temperature LIN Actuators

Main Rotary Valve

Radiator Outlet Coolant Temperature Sensor

Temperature/Humidity LIN Sensor

Hybrid

A/C Compressor

ACCM

Auxiliary Transmission Fluid Pump

Battery Control Module **

Battery Cooling Circuit

Battery Pack Current Sensor

Brake Pedal Travel Sensor

Charge Port

Charge Port Switches and Sensors

Drive Motor/Generator Control Module **

Drive Motors and Resolvers *

Electro-Hydraulic Brake Control Module **

Energy Storage Control Module **

Exhaust Heat Exchanger

Fuel Fill Door Sensors

High Voltage Battery Contactor

Hood Switch

Hybrid Batteries *

Hybrid Battery Temperature and Voltage Sensors

Hybrid EVAP Canister Assembly

Hybrid RESS Thermal Management:

- Air and Coolant Sensors
- Battery Coolant Pumps and Cooling Fans
- Battery High Voltage Heater

Battery Temperature Sensors

E-compressor * **

Power Electronics Coolant Pump

Port Valves

Rfg. Temperature and Pressure Sensors

Onboard Charger * **

SGCM Coolant Circuit (fan, relay, pump)

Starter Generator *

Starter Generator Control Module **

Starter Generator Drive Belt

Traction Power Inverter Module (TPIM) **

Vehicle Interface Control Module **

Wheel Speed Sensor

Miscellaneous Items Used with Above Components and Certain Tires are Covered

Belts

Boots

Clamps

Connectors

Ducts

Fittings

Gaskets

Grommets

Hoses

Housings

Mounting Hardware

Pipes

Pulleys

Sealing Devices

Springs

Tubes

Wiring and Relays

High Voltage Wiring

Tires (Heavy Duty Applications only 2 yr/ 24,000 mile Federal Emission Defect Warranty)

Parts specified in your maintenance schedule that require scheduled replacement are covered up to their first replacement interval or the applicable emission warranty coverage period, whichever comes first. If failure of one of these parts results in failure of another part, both will be covered under the Emission Control System Warranty.

For detailed information concerning specific parts covered by these emission control system warranties, ask your dealer.

Replacement Parts

The emission control systems of your vehicle were designed, built, and tested using genuine GM parts* and the vehicle is certified as being in conformity with applicable federal and California emission requirements. **Accordingly, it is recommended that any replacement parts used for maintenance or for the repair of emission control systems be new, genuine GM parts.**

The warranty obligations are not dependent upon the use of any particular brand of replacement parts. The owner can elect to use non-genuine GM parts for replacement purposes. Use of replacement parts which are not of equivalent quality may impair the effectiveness of emission control systems.

If other than new, genuine GM parts are used for maintenance replacements or for the repair of parts affecting emission control, the owner should assure himself/ herself that such parts are warranted by

their manufacturer to be equivalent to genuine GM parts in performance and durability.

* "Genuine GM parts," when used in connection with GM vehicles means parts manufactured by or for GM, designed for use on GM vehicles, and distributed by any division or subsidiary of GM.

Maintenance and Repairs

Maintenance and repairs can be performed by any qualified service outlet; however, warranty repairs must be performed by an authorized dealer except in a situation when a warranted part or a warranty station is not reasonably available to the vehicle owner.

In a situation where the vehicle owner is significantly inconvenienced, and an authorized dealer is not reasonably available, repairs may be performed at any available service establishment or by the owner, using any replacement part. GMC will consider reimbursement for the expense incurred (including diagnosis), not to exceed the manufacturer's suggested retail price for all warranted parts replaced and labor charges based on GMC's recommended time allowance for the warranty repair and the geographically appropriate labor rate. A part not being available within 10 days or a repair not being completed within 30 days constitutes a significant inconvenience. Retain receipts and failed parts in order to receive compensation for warranty repairs reimbursable due to these situations

If you are in a situation where you are significantly inconvenienced, and it is necessary to have repairs performed by other than a GMC dealer and you believe the repairs are covered by emission warranties, take the replaced parts and your receipt to a GMC dealer for reimbursement consideration. This applies to both the Federal Emission Defect Warranty and Federal Emission Performance Warranty.

Receipts and records covering the performance of regular maintenance or other repairs (outlined earlier) should be retained in the event questions arise concerning maintenance. These receipts and records should be transferred to each subsequent owner. GM will not deny warranty coverage solely on the absence of maintenance records. However, GM may deny a warranty claim if a failure to perform scheduled maintenance resulted in the failure of a warranty part.

Claims Procedure

As with the other warranties covered in this booklet, take your vehicle to any authorized GMC dealer facility to obtain service under the emission warranty. This should be done as soon as possible after failing an EPA-approved I/M test or a California smog check test, or at any time you suspect a defect in a part.

Those repairs qualifying under the warranty will be performed by any GMC dealer at no charge. Repairs which do not qualify will be charged to you. You will be notified as to whether or not the repair qualifies under the warranty within a reasonable time (not to exceed 30 days after receipt of the chassis by the dealer, or within the time period required by local or state law).

The only exceptions would be if you request or agree to an extension, or if a delay results from events beyond the control of your dealer or GM. If you are not so notified, GM will provide any required repairs at no charge.

In the event a warranty matter is not handled to your satisfaction, refer to the *Customer Satisfaction Procedure* ⇨ *25*.

For further information or to report violations of the Emission Control System Warranty, contact the EPA at:

U.S. Environmental Protection Agency
Office of Transportation and Air Quality
Compliance Division, Light-Duty Vehicle Group
Attn: Warranty Complaints
2000 Traverwood Drive
Ann Arbor, MI 48105

Email: complianceinfo@epa.gov

For a vehicle subject to the California Exhaust Emission Standards, contact:

State of California Air Resources Board
Mobile Source Operations Division
P.O. Box 8001
El Monte, CA 91731-2990

Your satisfaction and goodwill are important to your dealer and to GMC. Normally, any concerns with the sales transaction or the operation of your chassis will be resolved by your dealer's sales or service departments. Sometimes, however, despite the best intentions of all concerned, misunderstandings can occur. If your concern has not been resolved to your satisfaction, the following steps should be taken:

STEP ONE : Discuss your concern with a member of dealer management. Normally, concerns can be quickly resolved at that level. If the matter has already been reviewed with the sales, service, or parts manager, **contact the owner of the dealer facility** or the general manager.

STEP TWO : If after contacting a member of dealer management, it appears your concern cannot be resolved by the dealer without further help **contact your GMC Customer Assistance Center** by calling 1-800-GMC-8782 (462-8782). In Canada, contact GM of Canada Customer Care Centre by calling 1-800-263-3777: English or 1-800-263-7854: French.

We encourage you to call the toll-free number in order to give your inquiry prompt attention. Please have the following information available to give the Customer Assistance Representative:

- The Vehicle Identification Number (VIN). This is available from the vehicle registration or title, or the plate above the top of the instrument panel on the driver side, and visible through the windshield.
- The dealer name and location.
- The vehicle's delivery date and present mileage.

When contacting GMC, please remember that your concern will likely be resolved at a dealer's facility. That is why we suggest you follow Step One first if you have a concern.

STEP THREE : Both GM and your GM dealer are committed to making sure you are completely satisfied with your new chassis. However, if you continue to remain unsatisfied after following the procedure outlined in Steps One and Two, you can file with the BBB Auto Line Program to enforce any additional rights you may have.

The BBB Auto Line Program is an out of court program administered by the Council of Better Business Bureaus to settle automotive disputes regarding vehicle repairs or the interpretation of the New Cutaway Chassis Limited Warranty. Although you are required to resort to this informal dispute resolution program prior to filing any court action, use of the program is free of charge and your case will generally be heard within 40 days. If you do not agree with the decision given in your case, you may reject it and proceed with any other venue for relief available to you.

You may contact the BBB Auto Line Program using the toll-free telephone number or write them at the following address:

BBB Auto Line Program, a Division of BBB National Programs, Inc.
1676 International Drive
Suite 550
McLean, VA 221202

Telephone: 1-800-955-5100
bbbautoline.org

This program is available in all 50 states and the District of Columbia. Eligibility is limited by vehicle age, mileage, and other factors. GM reserves the right to change eligibility limitations and/or to discontinue its participation in this program.

Laws in many states permit owners to obtain a replacement chassis or a refund of the purchase price under certain circumstances. The provisions of these laws vary from state to state. To the extent allowed by state law, GM requires that you first provide us with written notification of any service difficulty you have experienced so that we have an opportunity to make any needed repairs before you are eligible for the remedies provided by these laws. The address for written notification, is in *Customer Assistance Offices* ⇨ *30*.

California Civil Code Section 1793.2(d) requires that, if GM or its representatives are unable to repair a new motor vehicle to conform to the vehicle's applicable express warranties after a reasonable number of attempts, GM shall either replace the new motor vehicle or reimburse the buyer the amount paid or payable by the buyer. California Civil Code Section 1793.22(b) creates a presumption that GM has had a reasonable number of attempts to conform the vehicle to its applicable express warranties if, within 18 months from delivery to the buyer or 18,000 miles on the vehicle's odometer, whichever occurs first, one or more of the following occurs:

- The same nonconformity results in a condition that is likely to cause death or serious bodily injury if the vehicle is driven AND the nonconformity has been subject to repair two or more times by GM or its agents AND the buyer or lessee has directly notified GM of the need for the repair of the nonconformity.
- The same nonconformity has been subject to repair four or more times by GM or its agents AND the buyer has notified GM of the need for the repair of the nonconformity.
- The vehicle is out of service by reason of repair nonconformities by GM or its agents for a cumulative total of more than 30 calendar days after delivery of the vehicle to the buyer.

NOTICE TO GENERAL MOTORS AS REQUIRED ABOVE SHALL BE SENT TO THE FOLLOWING ADDRESS:

General Motors LLC
P.O. Box 33170
Detroit , MI 48232-5170

When you make an inquiry, you will need to give the year, model, and mileage of your vehicle and your VIN.

GMC is proud of the protection afforded by its warranty coverages. In order to achieve maximum customer satisfaction, there may be times when GMC will establish a special coverage adjustment program to pay all or part of the cost of certain repairs not covered by the warranty or to reimburse certain repair expenses you may have incurred. Check with your GMC dealer or call GMC Customer Assistance to determine whether any special coverage adjustment program is applicable to your chassis.

When you make an inquiry, you will need to give the year, model, and mileage of your chassis and your Vehicle Identification Number (VIN).

GMC encourages customers to call the toll-free telephone number for assistance. However, if you wish to write or e-mail GMC, refer to the address listed below.

United States

GMC Customer Assistance Center
P.O. Box 33172
Detroit, MI 48232-5172
www.GMC.com

1-800-462-8782
1-800-462-8583 (For Text Telephone devices (TTYs))
Roadside Assistance:
1-888-881-3302

From Puerto Rico

1-800-496-9992 (English)
1-800-496-9993 (Spanish)

From U.S. Virgin Islands:

1-800-496-9994

Canada

Customer Care Centre
General Motors of Canada Company
500 Wentworth Street W
Oshawa, Ontario L1J 0C5
www.gm.ca

1-800-263-3777 (English)
1-800-263-7854 (French)
1-800-263-3830 (For Text Telephone devices (TTYs))
Roadside Assistance: 1-800-268-6800

To assist customers who are deaf or hard of hearing and who use Text Telephones (TTYs), GMC has TTY equipment available at its Customer Assistance Center and Roadside Assistance Center.

The TTY for the GMC Customer Assistance Center is:

1-800-462-8583 in the United States
1-800-263-3830 in Canada

The TTY for the GMC Roadside Assistance Center is:

1-888-889-2438 in the U.S.

GMC is proud to offer the response, security, and convenience of GMC's 24-hour Roadside Assistance Program. Coverage is provided for the length of your vehicle's Limited Powertrain Warranty. Consult your dealer or refer to the owner manual for details. The GMC Roadside Assistance Center can be reached by calling 1-888-881-3302.

Roadside Assistance is not part of or included in the coverage provided by the New Vehicle Limited Warranty. General Motors and General Motors of Canada Company reserve the right to make any changes or discontinue the Roadside Assistance program at any time without notification.

✍ NOTES

✍ NOTES

✍ NOTES

✍ NOTES

Certified Service

23GMC_Cutaway_WM_enUS_16588526A_2022AUG04_D