2019

CAMARO

High Performance Owner's Manual Supplement

chevrolet.com (U.S.)
chevrolet.ca (Canada)

Contents

Introduction 2
Seats and Restraints 3
Instruments and Controls 4
Infotainment System 8
Driving and Operating 14
Vehicle Care 31
Service and Maintenance 45
Technical Data 47
Index 51

Introduction

The names, logos, emblems, slogans, vehicle model names, and vehicle body designs appearing in this manual including, but not limited to, GM, the GM logo, CHEVROLET, the CHEVROLET Emblem, CAMARO, and the CAMARO Emblem are trademarks and/or service marks of General Motors LLC, its subsidiaries, affiliates, or licensors.

For vehicles first sold in Canada, substitute the name “General Motors of Canada Company” for Chevrolet Motor Division wherever it appears in this manual.

This manual describes features that may or may not be on the vehicle because of optional equipment that was not purchased on the vehicle, model variants, country specifications, features/applications that may not be available in your region, or changes subsequent to the printing of this owner’s manual.

Refer to the purchase documentation relating to your specific vehicle to confirm the features.

Keep this manual in the vehicle for quick reference.

Canadian Vehicle Owners

A French language manual can be obtained from your dealer, at www.helminc.com, or from:

Propriétaires Canadiens

On peut obtenir un exemplaire de ce guide en français auprès du concessionnaire ou à l'adresse suivante:

Helm, Incorporated
Attention: Customer Service
47911 Halyard Drive
Plymouth, MI 48170
USA

Using this Supplement

This supplement contains information specific to the unique components of the vehicle. It does not explain everything you need to know about the vehicle. Read this supplement along with the owner’s manual to learn about the vehicle's features and controls.

Index

A good place to look for what you need is the Index in the back of this supplement. It is an alphabetical list of what is in the supplement, and the page number where you will find it.

Litho in U.S.A.
Part No. 84075508 B Second Printing

©2018 General Motors LLC. All Rights Reserved.

Seats and Restraints

Seat Belts
Lap-Shoulder Belt 3

Seat Belts

Lap-Shoulder Belt

On coupe models, the driver seat belt has an Automatic Locking Retractor (ALR). This feature is useful in performance driving scenarios where the driver wants to be held in the seat more tightly to take advantage of the aggressive bolstering of the seat.

To use:

1. Move the seat 8–10 cm (3–4 in) rearward from the normal driving position.
2. Pull the driver shoulder belt out as far as it will go, until it stops, to set the lock. While holding the shoulder belt in this position, buckle the belt.

   When you release the shoulder belt, the retractor will make a ratchet sound when it retracts. When the retractor lock is set, the belt can be tightened but not pulled out of the retractor.
3. Adjust the belt close to your body, and then move the seat forward 8–10 cm (3–4 in) to the desired driving position. This will hold the belt to your body even tighter. The belt fit should be tight, but not uncomfortable.

To unlatch the belt, press the button on the buckle. The belt should return to its stowed position.

Instruments and Controls

Warning Lights, Gauges, and Indicators

Instrument Cluster 5
Boost Gauge 6

Warning Lights, Gauges, and Indicators

Instrument Cluster

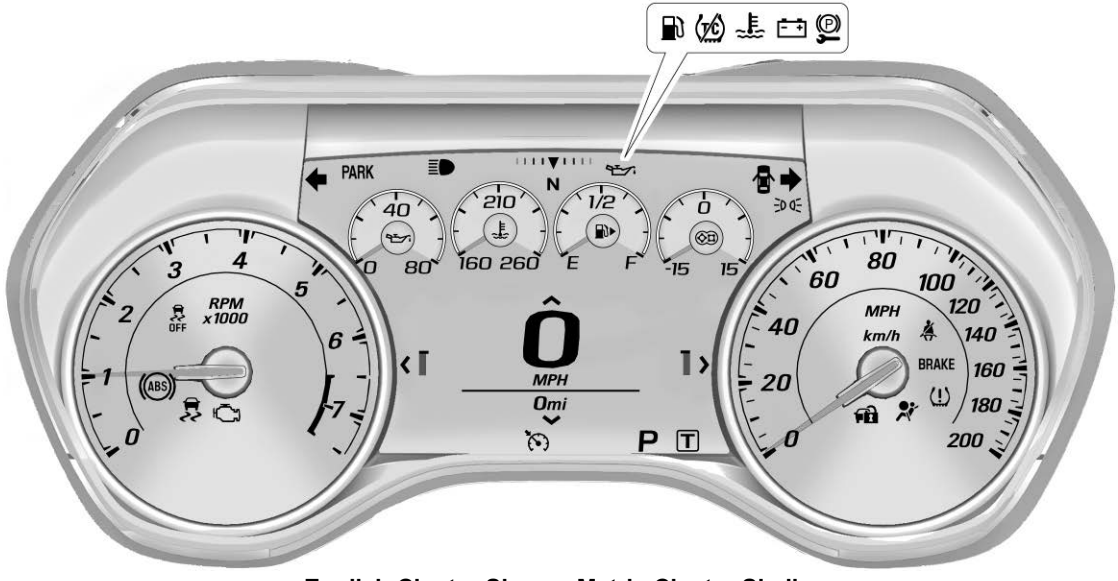

English Cluster Shown, Metric Cluster Similar

Cluster Menu

There is an interactive display area in the center of the instrument cluster.

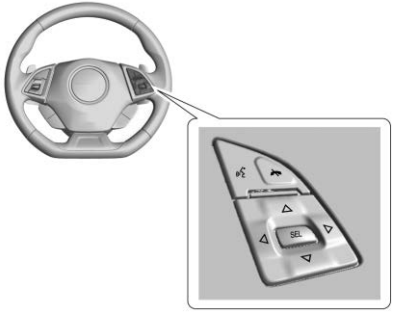

Use the right steering wheel control to open and scroll through the different items and displays.

Press ◁ to access the cluster applications. Use △ or ▽ to scroll through the list of applications. Press SEL to select the application from the list.

Performance

Press SEL to enter the Performance menu. Use △ or ▽ to scroll through the available items.

Tire Temperature : Displays tire temperature status. Unknown may display if information is unavailable.

Tire temperature states:

- Cold — Drive with caution as tire performance may be degraded.
- Cool — Drive with caution as tire performance may be degraded.
- Normal — Tires are at normal driving temperature.
- Warm — Tires are ready for aggressive driving.
- Overheated — Tire temperature may be higher than optimal.

eLSD and Wheel Slip : The upper eLSD display indicates the eLSD clutch locking percentage. The lower Wheel Slip display indicates the rear tire slip compared to the speed of the front tires.

See *Limited-Slip Differential* ⇨ *27* and *Track Events and Competitive Driving* ⇨ *14*.

Boost Gauge

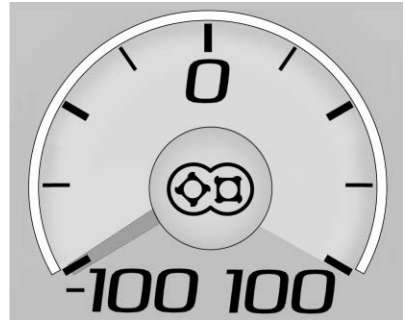

Metric

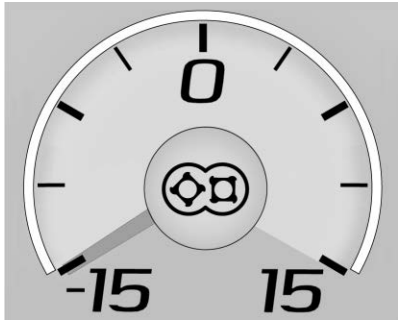

English

This gauge indicates vacuum during light to moderate throttle and boost under heavier throttle.

It displays the air pressure level in the intake manifold before it enters the engine's combustion chamber.

The gauge is automatically centered at zero every time the engine is started. Actual vacuum or boost is displayed from this zero point. Changes in ambient pressure, such as driving in mountains and changing weather, will slightly change the zero reading.

Infotainment System

Performance Data Recorder (PDR)
Performance Data Recorder (PDR) 8

Performance Data Recorder (PDR)

If equipped, the PDR icon displays on the Home Page.

Important Information

Use of the PDR may be prohibited or legally restricted in certain countries and situations. Ensure compliance with applicable laws and regulations, including, but not limited to: privacy laws, laws related to camera surveillance and recordings, road traffic and security laws, and laws on the protection of publicity and personality rights.

- Do not use the PDR if it causes distraction.
- Do not rely on camera footage to steer the vehicle.
- Comply with any notice and consent requirements before capturing and/or recording the voices or images of other persons or before collecting other personal data.
- Notify other drivers of your vehicle of the above rules and require them to comply.
- General Motors does not accept any responsibility or liability in connection with use that is not permitted.
- Law enforcement authorities may have the right to seize video recordings and use them as evidence of criminal/driving offenses against you or third parties.

The PDR records video, audio, and vehicle data. This data is stored on a removable SD card. The SD card reader is below the instrument panel to the left of the steering wheel and just above the hood release.

The recorded data is not stored anywhere else and is only accessible from the SD card.

To begin, insert a FAT32 formatted SD card, Class 10 required, 8, 16, or 32 GB recommended, into the SD card reader.

Touch the PDR icon to access the PDR menu. The options displayed are:

Start Recording

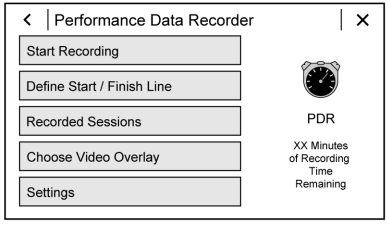

If the system is unable to begin recording, the Start Recording button is grayed out.

Touch Start Recording to begin recording. After recording begins, this button changes to Stop Recording. Touch to stop the recording session.

The recording must be stopped and the file closed before removing the SD card, or the recording cannot be reviewed.

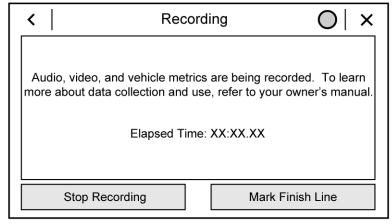

The elapsed time will show when recording. To define a finish line, see “Define Finish Line” later in this section.

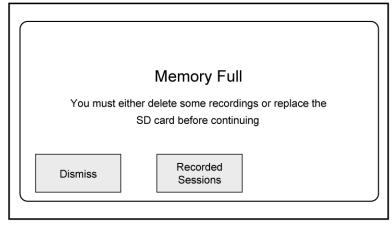

If there is no available space on the SD card, a message displays. Delete or transfer recordings on the SD card or use another SD card with free space.

To delete a recording, go to the Recorded Sessions menu and touch ✓ next to the item. See “Recorded Sessions” later in this section.

If no SD card is inserted, a message displays.

Define Finish Line

To track and record the vehicle’s lap times, the starting point of a lap must be set. Crossing this point activates the lap timer when recording.

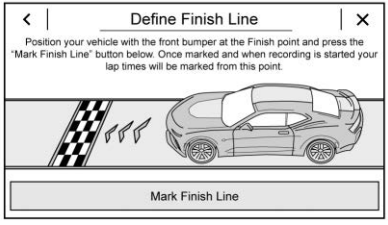

To set the finish line, position the vehicle with the front bumper at the start/finish point. From the PDR menu, touch Define Finish Line and then touch Mark Finish Line. This can be done with the vehicle moving.

Recorded Sessions

To view recorded videos, touch Recorded Sessions.

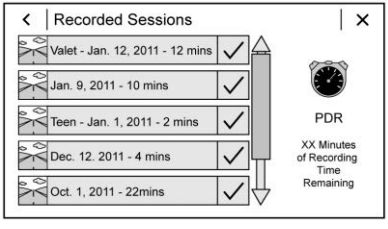

A list of recordings displays.

Select the recording to start playback.

Touch ✓ next to an item to delete that recording. Touch Yes to delete or No to cancel on the confirmation screen.

Video playback is not allowed while the vehicle is in motion.

Tap the screen while the video is playing to display the video controls:

Video Scrubber : Changes the position and playback. The length of the bar corresponds to the time of the video. Advance or rewind the video by dragging along the bar.

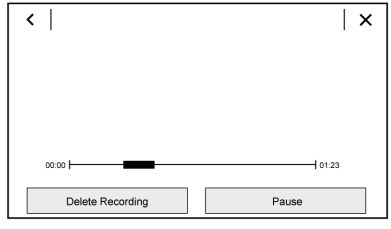

Delete Recording : Touch to delete the video. A confirmation screen displays. Touch Yes to delete or No to cancel.

Pause/Play : Touch to play or pause the video. The button will change when touched.

⇦ **:** Touch to display the previous screen.

Exit : Touch to exit the current display.

Choose Video Overlay

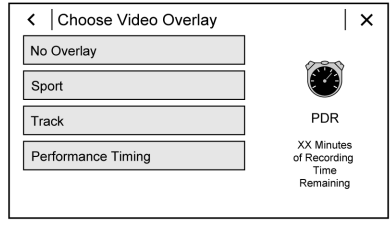

Touch Choose Video Overlay to display the menu.

Select one:

- No Overlay
- Sport

- Track
- Performance Timing

No Overlay:

No vehicle data displays on top of the recorded video. Vehicle data is still available with the video when accessed in the toolbox software.

Sport:

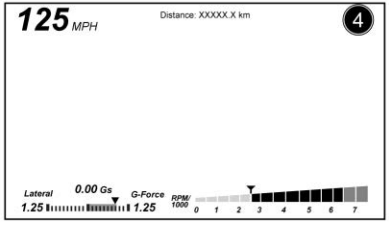

Displays these vehicle metrics:

- Vehicle Speed: Up to three digits are displayed in km/h or MPH depending on vehicle settings.
- Engine Rotations Per Minute (RPMs): The vertical line and triangle show current RPMs. As the RPMs increase, the backfill follows.
- Transmission State (Current Gear): Automatic and manual transmissions display 1, 2, etc.
- Lateral G-Force Graphic: Left and Right G-Forces are displayed. The graphic fills to the left or the right depending on the measure value. The measured G-Force displays as a number at the top of the graphic.
- Event Odometer: This displays the distance driven since the recording began.

Track:

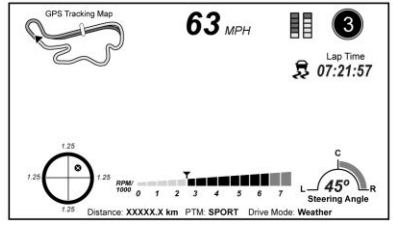

Displays these vehicle metrics:

- Vehicle Speed: Same as Sport.
- GPS Tracking Map: Shows the vehicle's current position relative to a known route.
- Engine Rotations Per Minute (RPMs): The vertical line and triangle indicate current RPMs. As the RPMs increase, the backfill follows.
- Transmission State (Current Gear): Same as Sport.
- Friction Bubble Graphic: Lateral and longitudinal G-Forces are displayed as a dot within a bubble. A red dot displays when the vehicle starts braking and turns green when the vehicle accelerates. The dot is white when the vehicle is not moving. A white dot is the default.
- Brake and Throttle Graphic: Displays the percentage value of brake and throttle pedal position from 0–100%.
- Steering Angle: The graphic fills from the center to the left or right depending on the direction of

steering. The numerical steering angle displays below the graphic.

- StabiliTrak/Electronic Stability Control (ESC) Active Indicator: The graphic only displays if the active handling systems are activated.
- Performance Traction Management (PTM) Mode: Displays the current PTM mode. The options are Wet, Dry, Sport 1, Sport 2, or Race.
- Current Lap Time: Displays the elapsed lap time if the finish line is defined and the vehicle has crossed the defined finish line at least once.
- Event Odometer: Displays the distance driven since the recording began.
- Drive Mode: Displays the vehicle's current drive mode.

Performance Timing:

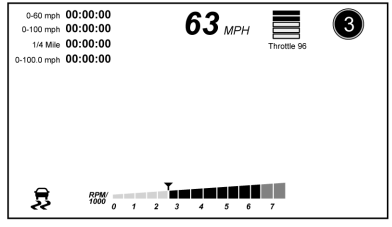

Displays these vehicle metrics:

- Vehicle Speed: Same as Sport.
- Engine Rotations Per Minute (RPMs): Same as Sport.
- Transmission State (Current Gear): Same as Sport.
- 0–100 km/h (0–60 mph), 0–200 km/h (0–100 mph), 400 m (1/4 mi), and 0–200–0 km/h (0–100–0 mph): The timer starts recording as soon as the vehicle accelerates. As the vehicle passes each speed and distance milestone, it is displayed on the overlay.
- Throttle Position: Displays the percentage of throttle applied from 0–100%.
- StabiliTrak/ESC Active Indicator: The graphic only displays if the active handling systems are activated.

Naming Convention

The recorded video file name is stored as the recorded date and the length of the recording.

If the recorded session was recorded while the system was in Valet Mode, the file name will display the mode, date, and length of time.

Settings

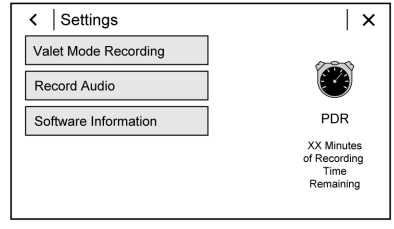

Touch Settings on the PDR menu to display settings.

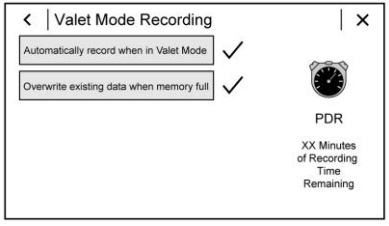

Valet Mode Recording : Allows recording preferences to be selected. It is recommended that a blank SD card be used. Available choices are:

- Automatically record when in Valet Mode: Enables the PDR to begin recording as soon as the vehicle is in Valet Mode.
- Overwrite existing data when memory full: Allows manual overwriting of previous recordings, one at a time starting with the oldest, when the current recording requires additional storage to continue.

Audio will not record during Valet Mode.

Record Audio : Allows audio to be recorded along with video.

Audio will not record during Valet Mode.

Software Information : Displays PDR software information and version numbers.

Toolbox Software : Allows for the evaluation of the driver and the vehicle performance on a personal computer after a recorded event. See www.chevrolet.com or your dealer for details to download the software.

Driving and Operating

Driving Information
Track Events and Competitive Driving 14

Automatic Transmission
Automatic Transmission 22

Ride Control Systems
Competitive Driving Mode 24
Limited-Slip Differential 27

Fuel
Top Tier Fuel 29
Recommended Fuel 29
Prohibited Fuels 29

Driving Information

Track Events and Competitive Driving

⚠ Danger

High-performance features are intended for use only on closed tracks by experienced and qualified drivers and should not be used on public roads. High-speed driving, aggressive cornering, hard braking, and other high-performance driving can be dangerous. Improper driver inputs for the conditions may result in loss of control of the vehicle, which could injure or kill you or others. Always drive safely.

This section covers specific track events and competitive driving information for the Camaro High Performance models only. For additional track events and competitive driving information, see the owner's manual.

Track events or competitive driving may affect the vehicle warranty. See the warranty manual before using the vehicle for racing or other competitive driving.

The Engine Sound Management setting should not be set to Stealth Mode during track events and competitive driving. See "Driver Mode Control" in the owner's manual.

Engine Oil

Caution

If you use the vehicle for racing or other competitive driving, the engine may use more oil than it would with normal use. Low oil levels can damage the engine. For information on how to add oil, see *Engine Oil* ⇨ *33*.

Be sure to check the oil level often during racing or other competitive driving and keep the

(Continued)

Caution (Continued)

level at or near the upper mark that shows the proper operating range on the engine oil dipstick.

The LT1 and LT4 engines are factory filled with 0W-40 dexos2 oil. 0W-40 dexos2 engine oil is approved for both track and street use with the LT1 and LT4 (ZL1 only, not ZL1 1LE) engines. 15W-50 full synthetic engine oil may also be used for track use and is required on the ZL1 1LE, but after track use must be changed back to 0W-40 dexos2 for street use. See *Capacities and Specifications* ⇨ *48*.

Fuel

Consider using 100 octane unleaded gasoline if the air temperature is above 30 °C (86 °F) at a track event. Do not use any fuel with conditions listed in *Prohibited Fuels* ⇨ *29*.

Automatic Transmission Fluid

Transmission fluid should be changed after every 15 hours of track use. Any transmission level set or change should be performed at your dealer.

Tire Pressures

Tire pressure specifications are listed in psi (kPa). Limit the vehicle weight to a maximum of the driver and one passenger, with no additional cargo.

Model	Axle	Road course cold starting pressures (1)	Road course target hot pressures (1)	Drag strip cold starting pressures	Sustained high speed cold starting pressures (2)
ZL1 1LE Tire Pressure Settings	Front	180 kPa (26 psi)	220–240 kPa (32–35 psi)	N/A	300 kPa (44 psi)
	Rear	180 kPa (26 psi)	220–240 kPa (32–35 psi)	N/A	300 kPa (44 psi)
ZL1 Tire Pressure Settings	Front	190 kPa (28 psi)	240–255 kPa (35–37 psi)	220 kPa (32 psi)	300 kPa (44 psi)
	Rear	190 kPa (28 psi)	255–270 kPa (37–39 psi)	180 kPa (26 psi)	300 kPa (44 psi)
SS 1LE Tire Pressure Settings	Front	190 kPa (28 psi)	240–255 kPa (35–37 psi)	N/A	300 kPa (44 psi)
	Rear	190 kPa (28 psi)	255–270 kPa (37–39 psi)	N/A	300 kPa (44 psi)
LS/LT 1LE Tire Pressure Settings	Front	210 kPa (30 psi)	250–260 kPa (36–38 psi)	N/A	280 kPa (41 psi)
	Rear	210 kPa (30 psi)	250–260 kPa (36–38 psi)	N/A	280 kPa (41 psi)

(1) Value will vary based on driving style, track, temperature, and weather conditions.

(2) Autobahn, standing mile, etc.

Before leaving the track event, reset tire pressures to the recommended inflation pressures on the Tire and Loading Information label.

Front License Plate/Bracket Removal (ZL1 Only)

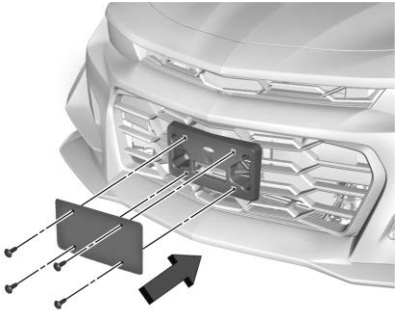

For track use, the front license plate and bracket can be removed from the fascia for increased airflow. Remove the license plate to access the four screws that attach the license plate bracket to the front fascia.

Water Deflector

If operating a ZL1 on a closed course in hot temperatures, remove the water deflector to increase airflow and improve cooling. Remove the three bolts. Replace immediately after track use to protect the engine compartment from water intrusion. Torque to 4.5 N•m (40 lb in).

Wicker Bill

A rear spoiler wicker bill is available for LS/LT and SS with the 1LE package only. If equipped with a wicker bill, use the instructions for installation.

Underbody Air Deflector Tire Dam Kit

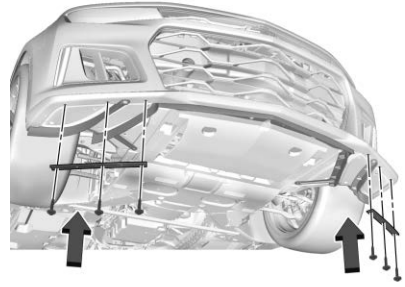

The underbody air deflector tire dam kit provided with ZL1 vehicles reduces the amount of aerodynamic lift on the front axle for better handling. The original tire dams

must be reinstalled after the track event. For installation, see the instructions provided with the kit.

Adjustable Front Struts (ZL1 1LE Only)

Camber Position for Track Events

The front strut top mount can be positioned two ways. The original setting is in the street position, but it can be turned 180° to the track position for additional negative camber on the front.

To adjust the position:

1. Raise the vehicle so the tires are slightly off the ground.

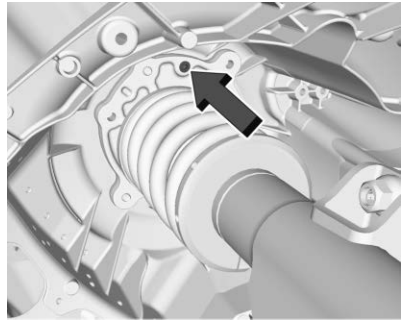

2. From the bottom side of the strut top mount, remove the Allen bolt that secures the top mount alignment pin to the top mount.

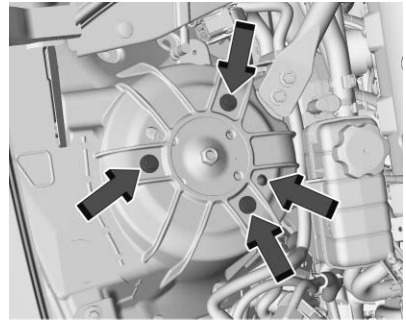

3. Remove the three strut mount bolts and the alignment pin.

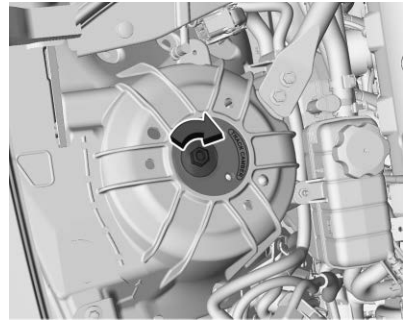

4. Using the hex feature on the top of the mount, turn the top mount 180° until the TRACK CAMBER text is visible and the second set of top mount holes aligns with the strut tower holes.
5. Reinstall the top mount bolts and torque to 29 N•m (21.4 lb ft).
6. Keep the top mount alignment pin and bolt for reinstallation when the struts are returned to the street position following the track event.
7. Verify and adjust the vehicle alignment per track alignment specifications to optimize vehicle performance for the track event.
8. Verify and re-adjust the vehicle alignment as needed following the track event.

Strut Spring Seat Adjustment

The front struts have a threaded spring seat that allows adjustment of the preload on the front springs. The vehicle corner weights and front trim heights can be adjusted.

The spring seat can be adjusted approximately 10 mm (0.4 in) up or down from the nominal position. Each complete turn of the spring perch will change the vehicle height approximately 1.4 mm (0.06 in). Do not allow the spring seat to contact the black seal cap when adjusting in the maximum upward direction.

To adjust the lower spring seat:

1. Raise the vehicle so the tires are completely off the ground.

2. Loosen the lower spring seat bolt. Do not completely remove the bolt.
3. Turn the spring perch upward to increase spring preload, or downward to decrease spring preload.
4. Torque the spring seat bolt to 10 N•m (7.4 lb ft).
5. Verify and adjust the vehicle alignment as needed following the spring seat adjustment.

Adjustable Rear Stabilizer Bar (ZL1 1LE Only)

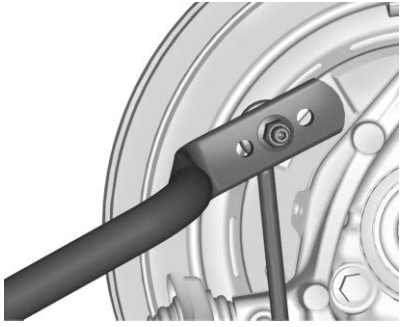

The rear stabilizer bar ends have three attachment positions that allow the rear roll stiffness of the vehicle to be adjusted.

The stabilizer bar stiffness increases approximately 15% using the rearward holes, or decreases approximately 10% using the forward holes.

To change the attachment position:

1. Raise and support the rear of the vehicle.
2. Remove the stabilizer bar link nut while holding the ball stud end.
3. Reposition the stabilizer bar link stud to the desired hole and tighten to 43 N•m (32 lb ft). Use the same hole position for both sides of the vehicle.

Wheel Alignment

Track alignment specifications are for vehicle at curb weight conditions (full tank of fuel, zero ballast).

Racing and competitive driving wheel alignment settings can be set as follows for increased handling performance:

Track Wheel Alignment Specifications

Model	Axle	Caster (Not Adjustable)		Camber		Total Toe	Steering Wheel Angle	Thrust Angle
		Left	Right	Left	Right	(Left + Right)		(Left − Right)/2
ZL1 1LE Track Alignment Settings	Front	7.9°	7.9°	−2.7° ± 0.15°	−2.7° ± 0.15°	0.1° ± 0.05°	0.0° ± 3.5°	—
	Rear	—	—	−2.0° ± 0.15°	−2.0° ± 0.15°	0.1° ± 0.05°	—	0.0° ± 0.1°
ZL1 Track Alignment Settings	Front	6.9°	6.9°	−2.0° ± 0.15°	−2.0° ± 0.15°	0.1° ± 0.05°	0.0° ± 3.5°	—
	Rear	—	—	−1.5° ± 0.15°	−1.5° ± 0.15°	0.1° ± 0.05°	—	0.0° ± 0.1°
SS 1LE Track Alignment Settings	Front	6.9°	6.9°	−2.0° ± 0.15°	−2.0° ± 0.15°	0.1° ± 0.05°	0.0° ± 3.5°	—
	Rear	—	—	−1.5° ± 0.15°	−1.5° ± 0.15°	0.1° ± 0.05°	—	0.0° ± 0.1°
LS/LT 1LE Track Alignment Settings	Front	7.2°	7.2°	−2.0° ± 0.15°	−2.0° ± 0.15°	0.1° ± 0.05°	0.0° ± 3.5°	—
	Rear	—	—	–1.25° ± 0.15°	–1.25° ± 0.15°	0.1° ± 0.05°	—	0.0° ± 0.1°

Caution

Using these wheel alignment settings may cause excessive tire wear. Only use these wheel alignment settings for racing or competitive driving. Excessive tire wear is not covered under the vehicle warranty.

Automatic Transmission

The Driver Information Center (DIC) displays the current gear selected in the lower right corner. When Sport Mode is active, an S is displayed. If Manual Mode is active, an M displays next to the current gear selected.

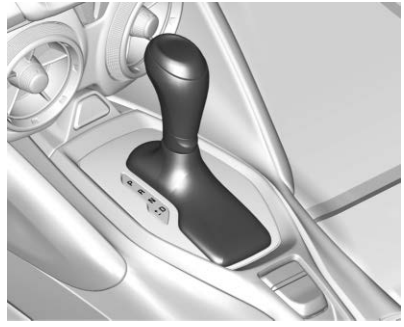

P : This position locks the drive wheels. It is the best position to use when starting the engine because the vehicle cannot move easily.

⚠ Warning

It is dangerous to get out of the vehicle if the shift lever is not fully in P (Park) with the parking brake firmly set. The vehicle can roll.

Do not leave the vehicle when the engine is running. If you have left the engine running, the vehicle can move suddenly. You or others could be injured. To be sure the vehicle will not move, even when you are on fairly level ground, always set the parking brake and move the shift lever to P (Park).

Make sure the shift lever is fully in P (Park) before starting the engine. The vehicle has an automatic transmission shift lock control system. The regular brake must be fully applied first and then the shift lever button must be pressed before shifting from P (Park) when the ignition is on. If you cannot shift out of P (Park), ease pressure on the shift lever, then push the shift lever all the way into P (Park) as you

maintain brake application. Then press the shift lever button and move the shift lever into another gear.

R : Use this gear to back up.

Caution

Shifting to R (Reverse) while the vehicle is moving forward could damage the transmission. The repairs would not be covered by the vehicle warranty. Shift to R (Reverse) only after the vehicle is stopped.

N : In this position, the engine does not connect with the wheels. To restart the engine when the vehicle is already moving, use N (Neutral) only.

⚠ Warning

Shifting into a drive gear while the engine is running at high speed is dangerous. Unless your foot is firmly on the brake pedal, the vehicle could move very rapidly. You could lose control and hit people or objects. Do not shift into a drive gear while the engine is running at high speed.

Caution

Shifting out of P (Park) or N (Neutral) with the engine running at high speed may damage the transmission. The repairs would not be covered by the vehicle warranty. Be sure the engine is not running at high speed when shifting the vehicle.

D : This position is for normal driving. If more power is needed for passing, press the accelerator pedal down.

Caution

If the vehicle does not shift gears, the transmission could be damaged. Have the vehicle serviced right away.

Performance Shifting

While driving in Sport Mode and Track Mode, if Tap Shift has not been activated, the transmission determines when the vehicle is being driven in a competitive manner. The transmission may remain in a gear longer than it would in the normal driving mode based on throttle input and vehicle lateral acceleration. If there is a rapid reduction in throttle from a heavy throttle position at high rpm, the transmission will maintain the current gear up to near redline rpm. While braking, the transmission will automatically downshift to the next

lower gear keeping engine speed above approximately 3000 rpm.
If the vehicle is then driven for a short time at a steady speed, and without high cornering loads, the transmission will upshift one gear at a time, until 10 (Tenth) gear. After shifting to 10 (Tenth) gear, or coming to a complete stop, the transmission will return to normal Sport Mode shifting.

Ride Control Systems

Competitive Driving Mode

Competitive Driving Mode, Performance Traction Management, and Launch Control are systems designed to allow increased performance while accelerating and/or cornering. This is accomplished by regulating and optimizing the engine, brakes, and suspension performance. These modes are for use at a closed course race track and are not intended for use on public roads. They will not compensate for driver inexperience or lack of familiarity with the race track. Drivers who prefer to allow the system to have more control of the engine, brakes, and suspension are advised to turn the normal Traction Control System (TCS) and StabiliTrak/Electronic Stability Control (ESC) on.

Caution

Attempting to shift when the drive wheels are spinning and do not have traction may cause damage to the transmission. Damage caused by misuse of the vehicle is not covered by the vehicle warranty. Do not attempt to shift when the drive wheels do not have traction.

Competitive Driving Mode allows full engine power while StabiliTrak/ESC helps maintain directional control of the vehicle by selective brake application. In this mode, TCS is off and Launch Control is available. Adjust your driving style to account for the available engine power. See “Launch Control” later in this section.

Do not use cruise control in performance driving situations.

When StabiliTrak/ESC is in a performance driving state by pressing twice for Competitive

Driving Mode or Performance Traction Management Mode, or by pressing and holding for five seconds to turn StabiliTrak/ESC off, the cruise control buttons on the left side of the steering wheel will be inoperative.

To regain cruise control capability, press once to return to regular StabiliTrak/ESC operation.

Performance Traction Management (PTM) (ZL1 Only)

PTM is not available on convertibles. Convertibles have Competitive Driving Mode instead. See “Competitive Driving Mode” previously in this section.

PTM integrates the TCS, StabiliTrak/ESC, and Competitive Driving Mode systems to provide improved and consistent performance when cornering. The amount of available engine power is based on the mode selected, track conditions, driver skill, and radius of each corner.

These lights are on when the vehicle is in PTM Mode.

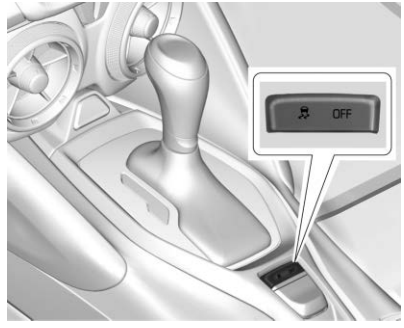

With Track Mode engaged, select the optional handling mode by pressing two times. A menu with the PTM modes will appear.

- Wet
- Dry
- Sport 1
- Sport 2
- Race

To experience the performance benefit of PTM, after entering a curve and at the point where you would normally start to increase acceleration, fully press the accelerator pedal. The PTM system will modify the level of engine power for a smooth and consistent corner exit.

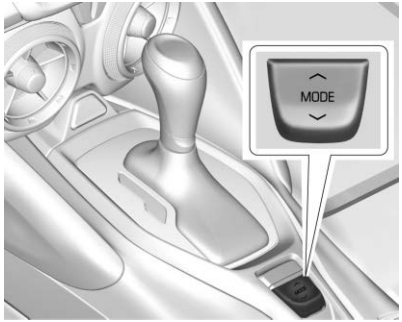

To select a mode while in PTM, press MODE up or down.

PTM Wet

- Intended for all driver skill levels.
- Ideal for wet or damp conditions only; not intended for heavy rain or standing water.
- StabiliTrak/ESC is on and engine power is reduced based on conditions.

PTM Dry

- For use by less experienced drivers or while learning a new track.
- Dry conditions only.
- StabiliTrak/ESC is on and engine power is reduced based on conditions.

PTM Sport 1

- For use by drivers familiar with the track.
- Dry conditions only.
- StabiliTrak/ESC is on and more engine power is available than lower modes.

PTM Sport 2

- For use by drivers familiar with the track.
- Dry conditions only.
- StabiliTrak/ESC is off and engine power available is the same as in Sport 1.

PTM Race

- For use by drivers familiar with the track.
- Dry conditions only.
- StabiliTrak/ESC is off and engine power is available for maximum cornering speed.

In any PTM Mode, Launch Control is available. Use PTM Race for the most consistent performance during drag strip use. See “Custom Launch Control” in Track Events and Competitive Driving in the owner’s manual.

Press and release OFF to turn off PTM and return to TCS and StabiliTrak/ESC. The traction off light TC and StabiliTrak/ESC OFF light OFF will go out.

Launch Control

If equipped, Launch Control is available within Competitive Driving Mode and Performance Traction Management (PTM) to allow high levels of vehicle acceleration in a straight line. Launch Control is a form of traction control that manages tire spin while launching the vehicle. This feature is intended for use during closed course race

events where consistent zero to 60 and quarter mile times are desirable.

Launch Control is only available when the following criteria are met:

- Competitive Driving Mode is selected or any of the Performance Traction Management modes are selected. The traction off light comes on in the instrument cluster and the appropriate Driver Information Center (DIC) message displays.
- The vehicle is not moving.
- The steering wheel is pointing straight.

Manual Transmissions

- The clutch is fully pressed and the transmission is in 1 (First) gear.
- The accelerator pedal is rapidly applied and held to wide open throttle.

Launch Control will initially limit engine speed as you rapidly apply the accelerator pedal to wide open throttle. Allow the engine rpm to stabilize. A smooth, quick release of the clutch, while maintaining the fully pressed accelerator pedal, will manage wheel slip.

Automatic Transmissions

- The brake pedal is firmly pressed to the floor, equivalent to a panic brake event.
- The accelerator pedal is rapidly applied to wide open throttle. If the vehicle rolls due to wide open throttle, release the throttle, press the brake pedal more firmly, and re-apply the accelerator to wide open throttle.

Launch Control will initially limit engine speed as you rapidly apply the accelerator pedal to wide open throttle. Allow the engine rpm to stabilize. A smooth, quick release of the brake pedal, while maintaining the fully pressed accelerator pedal, will manage wheel slip.

After the vehicle is launched, the system continues in Competitive Driving Mode or PTM.

Competitive Driving Mode, PTM, and Launch Control are systems designed for a closed course race track and not intended for use on public roads. The systems are not intended to compensate for lack of driver experience or familiarity with the race track.

Custom Launch Control may be available through the Settings menu, if equipped. See “Custom Launch Control” in Track Events and Competitive Driving in the owner’s manual.

Limited-Slip Differential

The Electronic Limited-Slip Differential (eLSD) is a hydraulically actuated clutch system. It can infinitely vary the clutch engagement between 0 and 200 N•m (147 lb ft) of breakaway torque between the rear wheels. It responds to full engagement

within 0.150 seconds when necessary. Smaller clutch adjustments happen even faster.

The eLSD:

- Uses the vehicle sensors and driver inputs to determine the optimum amount of clutch engagement for the conditions.
- Improves traction while cornering by changing the engagement to achieve a balance between directional control and acceleration.
- Provides optimal engagement for high-speed control and stability without affecting precise steering and turn-in.
- Improves vehicle stability during spirited driving and evasive maneuvers. Is fully integrated with the Active Handling and Performance Traction Management (PTM) systems.

There are unique calibrations based on the Traction Control System (TCS) setting. eLSD modes change automatically when is pressed. No unique input from the driver is required.

- Mode 1 is the standard mode when the vehicle is started. It provides a touring calibration with an emphasis on vehicle stability. Mode 1 is also used in PTM Wet mode.
- Mode 2 is engaged when both TCS and StabiliTrak/Electronic Stability Control (ESC) are turned off. This calibration provides more nimble corner turn-in, and is biased for better traction out of corners.
- Mode 3 is engaged when PTM is engaged in Dry, Sport 1 & 2, and Race modes. This is a nimble calibration with similar functionality as eLSD Mode 2, however, it is integrated to work with PTM.
- Mode 4 is engaged when TCS is selected off, but StabiliTrak/ESC remains on. Vehicle stability is still the priority, while allowing for optimized traction out of corners.

The ZL1 coupe and SS 1LE are calibrated uniquely and optimized for their unique powertrain and chassis combinations.

Fuel

Top Tier Fuel

GM recommends the use of TOP TIER Detergent Gasoline to keep the engine clean, reduce engine deposits, and maintain optimal vehicle performance. Look for the TOP TIER Logo or see www.toptiergas.com for a list of TOP TIER Detergent Gasoline marketers and applicable countries.

TOP TIER
Detergent Gasoline

CATEGORIE SUPERIEURE
Essences Détergentes

Recommended Fuel

Do not use any fuel labeled E85 or FlexFuel. Do not use gasoline with ethanol levels greater than 15% by volume.

Use premium unleaded gasoline meeting ASTM specification D4814 with a posted octane rating of 93. If unavailable, unleaded gasoline with a posted octane rating of 91 may be used, but with reduced performance and fuel economy. If the octane is less than 91, the engine could be damaged and the repairs would not be covered by the vehicle warranty. If heavy knocking is heard when using gasoline rated at 93 octane, the engine needs service.

Prohibited Fuels

Caution

Do not use fuels with any of the following conditions; doing so may damage the vehicle and void its warranty:

- For vehicles that are not FlexFuel, fuel labeled greater than 15% ethanol by volume, such as mid-level ethanol blends (16–50% ethanol), E85, or FlexFuel.
- Fuel with any amount of methanol, methylal, ferrocene, and aniline. These fuels can corrode metal fuel system parts or damage plastic and rubber parts.
- Fuel containing metals such as methylcyclopentadienyl manganese tricarbonyl

(Continued)

Caution (Continued)

(MMT), which can damage the emissions control system and spark plugs.

- Fuel with a posted octane rating of less than the recommended fuel. Using this fuel will lower fuel economy and performance, and may decrease the life of the emissions catalyst.

Vehicle Care

Vehicle Checks
Engine Compartment Overview 32
Engine Oil 33
Engine Air Filter Life System . . . 35
Engine Air Cleaner/Filter 36
Cooling System 37
Engine Overheating 38

Wheels and Tires
Low-Profile Tires 38
Summer Tires 38
Tire Pressure for High-Speed Operation 39

Towing the Vehicle
Towing the Vehicle 40

Appearance Care
Exterior Care 41

Vehicle Checks

Engine Compartment Overview

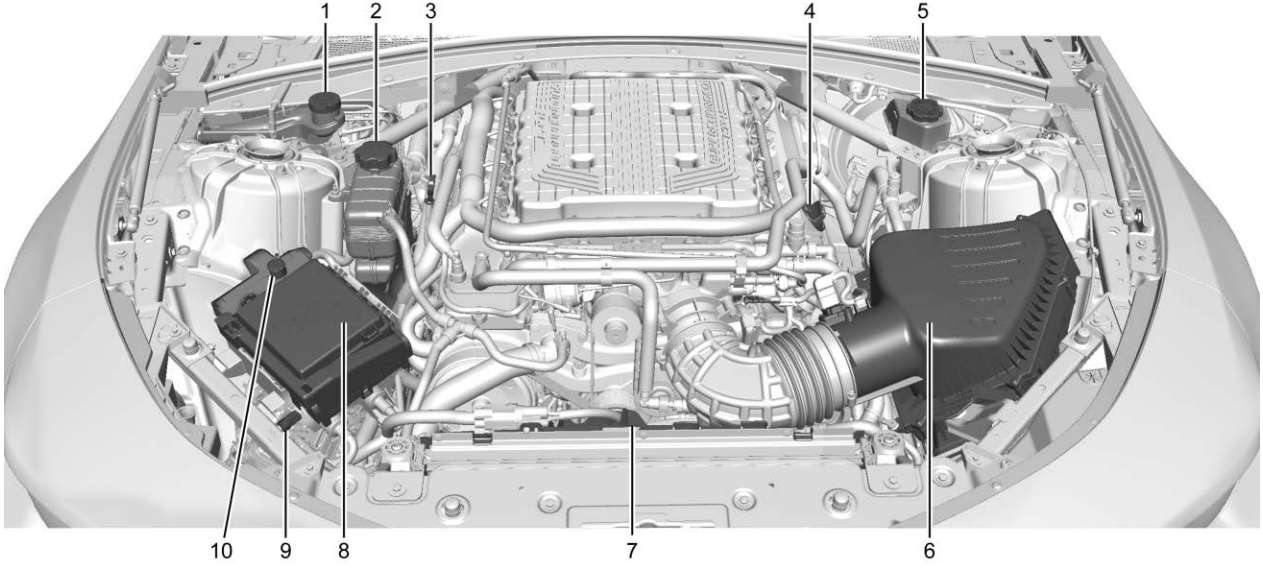

1. Windshield Washer Fluid Reservoir.
2. Engine Coolant Surge Tank and Pressure Cap.
3. Engine Oil Dipstick.
4. Engine Oil Fill Cap.
5. Brake/Clutch Fluid Reservoir.
6. Engine Air Cleaner/Filter.
7. Engine Cooling Fan (Out of View).
8. Engine Compartment Fuse Block.
9. Negative (–) Battery Terminal.
10. Positive (+) Battery Terminal.

Engine Oil

To ensure proper engine performance and long life, careful attention must be paid to engine oil. Following these simple, but important steps will help protect your investment:

- Use engine oil approved to the proper specification and of the proper viscosity grade. See “Selecting the Right Engine Oil” in this section.
- Check the engine oil level regularly and maintain the proper oil level. See “Checking Engine Oil” and “When to Add Engine Oil” in this section.
- Change the engine oil at the appropriate time. See “Engine Oil Life System” in the owner’s manual.
- Always dispose of engine oil properly. See “What to Do with Used Oil” in this section.

Checking Engine Oil

Check the engine oil level regularly, every 650 km (400 mi), especially prior to a long trip. The engine oil dipstick handle is a loop. See *Engine Compartment Overview* ⇨ *32* for the location.

⚠ Warning

The engine oil dipstick handle may be hot; it could burn you. Use a towel or glove to touch the dipstick handle.

If a low oil Driver Information Center (DIC) message displays, check the oil level.

Follow these guidelines:

- To get an accurate reading, park the vehicle on level ground. Check the engine oil level after the engine has been off for at least two hours. Checking the engine oil level on steep grades or too soon after engine shutoff can result in incorrect readings. Accuracy improves when

checking a cold engine prior to starting. Remove the dipstick and check the level.

- If unable to wait two hours, the engine must be off for at least 15 minutes if the engine is warm, or at least 30 minutes if the engine is not warm. Pull out the dipstick, wipe it with a clean paper towel or cloth, then push it back in all the way. Remove it again, keeping the tip down, and check the level.

When to Add Engine Oil

If the oil is below the cross-hatched area at the tip of the dipstick and the engine has been off for at least 15 minutes, add 1 L (1 qt) of the recommended oil and then recheck the level. See “Selecting the Right Engine Oil” later in this section for an explanation of what kind of oil to use. For engine oil crankcase capacity, see *Capacities and Specifications* ⇨ *48*.

Caution

Do not add too much oil. Oil levels above or below the acceptable operating range shown on the dipstick are harmful to the engine. If the oil level is above the operating range (i.e., the engine has so much oil that the oil level gets above the cross-hatched area that shows the proper operating range), the engine could be damaged. Drain the excess oil or limit driving of the vehicle, and seek a service professional to remove the excess oil.

See *Engine Compartment Overview* ⇨ *32* for the location of the engine oil fill cap.

Add enough oil to put the level somewhere in the proper operating range. Push the dipstick all the way back in when through.

Selecting the Right Engine Oil

Selecting the right engine oil depends on both the proper oil specification and viscosity grade. See *Recommended Fluids and Lubricants* ⇨ *46*.

Specification

Use engine oils that meet the dexos2 specification. Engine oils that have been approved by GM as meeting the dexos2 specification are marked with the dexos2 approved logo. See www.gmdexos.com.

Caution

Failure to use the recommended engine oil or equivalent can result in engine damage not covered by the vehicle warranty.

Viscosity Grade

Use SAE 0W-40 viscosity grade engine oil for the LT1 and LT4 engines.

When selecting an oil of the appropriate viscosity grade, it is recommended to select an oil of the correct specification. See “Specification” earlier in this section.

If 0W-40 dexos2 oil is not available, SAE 5W-30 dexos1 full synthetic engine oil may be used for street use.

Engine Oil Additives/Engine Oil Flushes

Do not add anything to the oil. The recommended oils meeting the dexos specification are all that is needed for good performance and engine protection.

Engine oil system flushes are not recommended and could cause engine damage not covered by the vehicle warranty.

What to Do with Used Oil

Used engine oil contains certain elements that can be unhealthy for your skin and could even cause cancer. Do not let used oil stay on your skin for very long. Clean your skin and nails with soap and water, or a good hand cleaner. Wash or properly dispose of clothing or rags containing used engine oil. See the manufacturer's warnings about the use and disposal of oil products.

Used oil can be a threat to the environment. If you change your own oil, be sure to drain all the oil from the filter before disposal. Never dispose of oil by putting it in the trash or pouring it on the ground, into sewers, or into streams or bodies of water. Recycle it by taking it to a place that collects used oil.

Engine Air Filter Life System

When to Change Engine Air Filter

If equipped, this feature provides an indication of when to change the engine air filter. It is based on driving conditions, which can cause when to change to vary greatly. It is possible an air filter change may not be indicated for up to four years.

When the "Replace at Next Oil Change" message displays, the engine air filter should be replaced at the time of the next engine oil change. When the "Replace Engine Air Filter Now" message displays, the engine air filter should be replaced as soon as possible. Reset the engine air filter life system after

the engine air filter is replaced. See your dealer for service and to reset the system.

How to Reset Engine Air Filter Life System

Reset the system whenever the engine air filter is replaced so that the system can calculate the next engine air filter change.

To reset:

1. Place the vehicle in P (Park).
2. Select Engine Air Filter Life on the DIC menu. See “Driver Information Center (DIC)” in the owner’s manual.
3. Press ▷ to move to the Reset/Disable display area. Select Reset then press **SEL**. Then press Yes to confirm the reset.
4. 100% Air Filter Life will be displayed when the Engine Air Filter Life System is successfully reset.

Engine Air Cleaner/Filter

The engine air cleaner/filter is in the engine compartment on the driver side of the vehicle.

When to Inspect the Engine Air Cleaner/Filter

- For intervals on changing and inspecting the engine air filter, see “Maintenance Schedule” in the owner’s manual.
- If equipped with Engine Air Filter Life System, see *Engine Air Filter Life System* ⇨ *35*.
- If driving in very dusty areas, follow the engine air filter inspecting and changing intervals, see “Maintenance Schedule” in the owner’s manual.

How to Inspect the Engine Air Cleaner/Filter

Do not start the engine or have the engine running with the engine air cleaner/filter housing open. Before removing the engine air cleaner/filter, make sure that the engine air cleaner/filter housing and nearby components are free of dirt and debris. Remove the engine air cleaner/filter. Lightly tap and shake the engine air cleaner/filter (away from the vehicle), to release loose dust and dirt. Inspect the engine air cleaner/filter for damage, and replace if damaged. Do not clean the engine air cleaner/filter or components with water or compressed air.

To inspect or replace the engine air cleaner/filter:

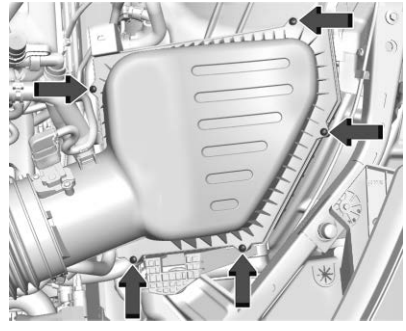

1. Remove the five screws and lift the cover assembly. Use caution not to drop any of the loose screws.
2. Inspect or replace the air cleaner/filter.
3. Reverse Steps 1 and 2 to reinstall the housing cover.

⚠ Warning

Operating the engine with the air cleaner/filter off can cause you or others to be burned. Use caution when working on the engine. Do not start the engine or drive the vehicle with the air cleaner/filter off, as flames may be present if the engine backfires.

Caution

If the air cleaner/filter is off, dirt can easily get into the engine, which could damage it. Always have the air cleaner/filter in place when driving.

Cooling System

The cooling system allows the engine to maintain the correct working temperature.

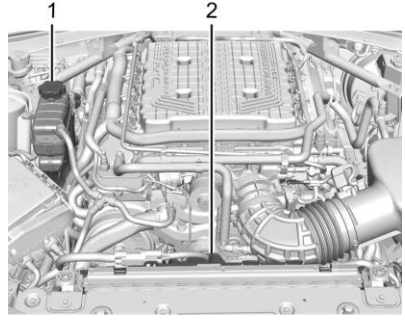

1. Engine Coolant Surge Tank and Pressure Cap
2. Engine Cooling Fan (Out of View)

⚠ Warning

An underhood electric fan can start up even when the engine is not running and can cause injury. Keep hands, clothing, and tools away from any underhood electric fan.

⚠ Warning

Do not touch heater or radiator hoses, or other engine parts. They can be very hot and can burn you. Do not run the engine if there is a leak; all coolant could leak out. That could cause an engine fire and can burn you. Fix any leak before driving the vehicle.

Caution

Do not use anything other than a mix of DEX-COOL coolant that meets GM Standard GMW3420 and clean, drinkable water. Anything else can cause damage to the engine cooling system and the vehicle, which would not be covered by the vehicle warranty.

Engine Coolant

See ”Engine Coolant” under “Cooling System” in the owner’s manual.

Engine Overheating

See “Engine Overheating” in the owner’s manual.

Wheels and Tires

Low-Profile Tires

If the vehicle has 285/30ZR20, 305/30ZR20, 305/30ZR19, or 325/30ZR19 size tires, they are classified as low-profile tires.

Caution

Low-profile tires are more susceptible to damage from road hazards or curb impact than standard profile tires. Tire and/or wheel assembly damage can occur when coming into contact with road hazards like potholes, or sharp edged objects, or when sliding into a curb. The warranty does not cover this type of damage. Keep tires set to the correct inflation pressure and when possible, avoid contact with curbs, potholes, and other road hazards.

Summer Tires

High Performance Summer Tires

ZL1, SS with the 1LE package, and LS/LT with the 1LE package are equipped with high performance summer tires. These tires have a special tread and compound that are optimized for maximum dry and wet road performance. This special tread and compound will have decreased performance in cold climates, and on ice and snow. It is recommended that winter tires be installed on the vehicle if frequent driving at temperatures below approximately 5 °C (40 °F) or on ice or snow covered roads is expected. See “Winter Tires” in the owner’s manual.

Caution

High performance summer tires have rubber compounds that lose flexibility and may develop surface cracks in the tread area at temperatures below −7 °C

(Continued)

Caution (Continued)

(20 °F). Always store high performance summer tires indoors and at temperatures above −7 °C (20 °F) when not in use. If the tires have been subjected to −7 °C (20 °F) or less, let them warm up in a heated space to at least 5 °C (40 °F) for 24 hours or more before being installed or driving a vehicle on which they are installed. Do not apply heat or blow heated air directly on the tires. Always inspect tires before use. See “Tire Inspection” in the owner’s manual.

Tire Pressure for High-Speed Operation

⚠ Warning

Driving at high speeds, 160 km/h (100 mph) or higher, puts additional strain on tires. Sustained high-speed driving causes excessive heat buildup and can cause sudden tire failure. This could cause a crash, and you or others could be killed. Some high-speed rated tires require inflation pressure adjustment for high-speed operation. When speed limits and road conditions allow the vehicle to be driven at high speeds, make sure the tires are rated for high-speed operation, are in excellent condition, and are set to the correct cold tire inflation pressure for the vehicle load.

ZL1 and SS with the 1LE package are equipped with 285/30ZR20 (95Y) and 305/30ZR20 (99Y) or 305/30ZR19 (98Y) and 325/30ZR19 (101Y) size tires that are capable of high-speed use. Make sure vehicles with this size tires are inflated to 300 kPa (44 psi) before operating the vehicle at sustained high-speed operation at speeds over 160 km/h (100 mph).

LS/LT with the 1LE package is equipped with 245/40ZR20 95Y and 275/35ZR20 98Y size tires that are capable of high-speed use. Make sure vehicles with this size tires are inflated to 280 kPa (41 psi) before operating the vehicle at sustained high-speed operation at speeds over 160 km/h (100 mph).

Return the tires to the recommended cold tire inflation pressure when high-speed driving has ended. See “Vehicle Load Limits” and “Tire Pressure” in the owner’s manual.

Towing the Vehicle

Caution

Incorrectly towing a disabled vehicle may cause damage. The damage would not be covered by the vehicle warranty. Do not lash or hook to suspension components. Use the proper straps around the tires to secure the vehicle. Do not drag a locked wheel/tire while loading the vehicle. Do not use a sling type lift to tow the vehicle. This could damage the vehicle.

GM recommends a flatbed tow truck to transport a disabled vehicle. Use ramps to help reduce approach angles, if necessary. A towed vehicle should have its drive wheels off the ground. Contact Roadside Assistance or a professional towing service if the disabled vehicle must be towed.

To tow the vehicle behind another vehicle for recreational purposes, such as behind a motor home, see the owner's manual.

SS 1LE, and ZL1 Only

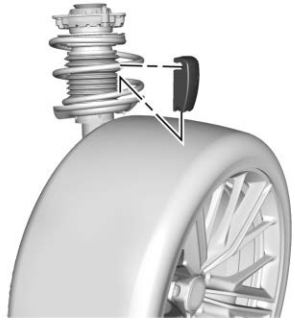

Due to low ramp angles on ZL1 and SS 1LE vehicles, use care when loading the vehicle onto a flatbed carrier. Front spring spacers are provided for lifting the front suspension if more clearance is necessary when towing.

ZL1 1LE Only

Due to the high spring rate and spring design used on ZL1 1LE vehicles, spring spacers are not provided. If more clearance is needed when towing, raise the adjustable spring seat to lift the front suspension. See "Strut Spring Seat Adjustment" in *Track Events and Competitive Driving* ⇨ *14*.

Tow Eye Socket

The ZL1 vehicle is equipped with a front tow eye that can be used to pull the vehicle onto a flatbed car carrier from a flat road surface. Do not use the tow eye to pull the vehicle from snow, mud, or sand.

The tow eye is in the rear compartment storage area.

To install the tow eye:

1. Locate the tow eye socket through the opening in the grille.
2. Install the tow eye into the socket by turning it clockwise until it stops.

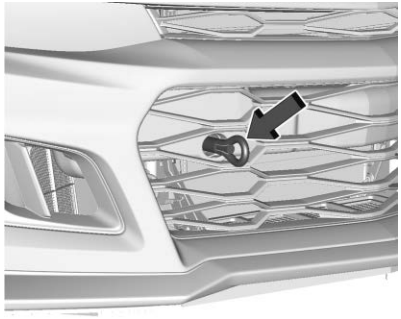

3. When finished, place the tow eye back in the vehicle.

Appearance Care

Exterior Care

Automatic Car Washes

Do not use automatic car washes. Vehicles with the ZL1 or the 1LE package (or any accessory ground effects package) have reduced ground clearance.

Caution

Vehicles equipped with an accessory ground effects package have reduced ground clearance. Damage can occur in automatic car washes, when approaching curbs, or on steep inclines. Do not use automatic car washes. Approach curbs and inclines with caution.

Caution

Stepping on the rocker molding could damage the molding. The repairs would not be covered by the vehicle warranty. Do not step on the rocker molding.

Hood Extractor

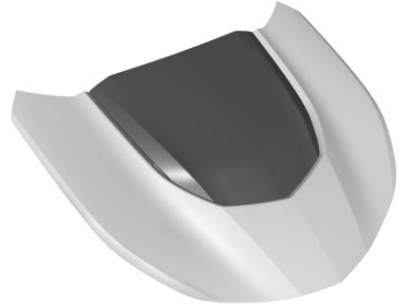

Caution

Using wax on low gloss black finish stripes can increase the gloss level and create a non-uniform finish. Clean low gloss stripes with soap and water only.

It is not recommended that the ZL1 hood extractor be waxed, as it will change the gloss level of the surface. In addition, care must be used when waxing around the hood extractor. If a small amount of wax is applied to the hood extractor it can create an irregular appearance in the surface of the panel. If wax, debris, or other materials create stains on the hood extractor, see your dealer for the recommended cleaner.

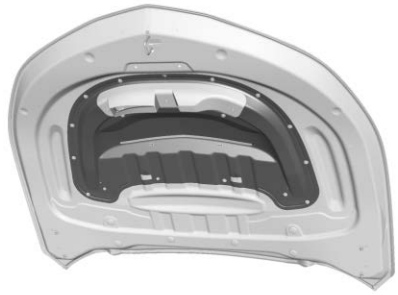

There is a water deflector on the underside of the hood extractor. Remove it for track use only.

Hood Wrap (1LE Only)

Caring for Vehicle Graphics

Wash regularly.

- Wash whenever the car appears dirty. Contaminants allowed to remain on the graphic may be more difficult to remove during cleaning.
- Rinse off as much dirt and grit as possible with a spray of water.
- Never scrub the hood wrap surface.
- Use a wet, non-abrasive detergent.
- Do not buff or apply polishes to the hood wrap.
- Rinse thoroughly with clean water. To reduce water spotting, immediately use a silicone squeegee to remove water. Finish with a clean microfiber cloth.

Pressure Washing

- Ensure the water pressure is kept below 14,000 kPa (2,000 psi).
- Keep water temperature below 80 °C (180 °F).
- Use a spray nozzle with a 40 degree wide angle spray pattern.
- Keep the nozzle at least 30 cm (1 ft) away from and perpendicular (at 90 degrees) to the graphic.

Finish Care

Application of aftermarket clearcoat sealant/wax materials is not recommended. If painted surfaces are damaged, see your dealer to have the damage assessed and repaired. Foreign materials such as calcium chloride and other salts, ice melting agents, road oil and tar, tree sap, bird droppings, chemicals from industrial chimneys, etc., can damage the vehicle's finish if they remain on painted surfaces. Wash the vehicle as soon as possible. If necessary, use non-abrasive cleaners that are marked safe for painted surfaces to remove foreign matter.

Occasional hand waxing or mild polishing should be done to remove residue from the paint finish. See your dealer for approved cleaning products.

Do not apply waxes or polishes to uncoated plastic, vinyl, flat paint, or matte or textured finishes as damage can occur.

Caution

Machine compounding or aggressive polishing on a basecoat/clearcoat paint finish may damage it. Use only non-abrasive waxes and polishes that are made for a basecoat/clearcoat paint finish on the vehicle.

To keep the paint finish looking new, keep the vehicle garaged or covered whenever possible.

ZL1 1LE Spoiler

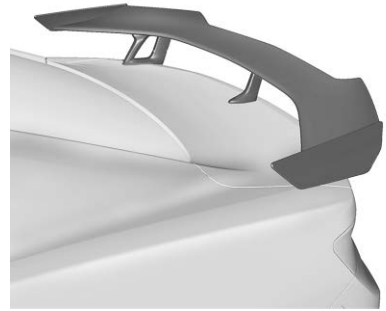

It is not recommended that the ZL1 1LE spoiler be waxed, as it will change the gloss level of the surface. In addition, care must be used when waxing around the spoiler. If a small amount of wax is applied to the spoiler it can create an irregular appearance to the surface of the panel. If wax, debris, or other materials create stains on the spoiler, see your dealer for the recommended cleaner.

Fuel Spills

Wipe off fuel spills immediately to avoid degrading the vinyl and adhesive. Then wash, rinse, and dry.

Service and Maintenance

Recommended Fluids, Lubricants, and Parts
Recommended Fluids and Lubricants 46
Maintenance Replacement Parts 46

Recommended Fluids, Lubricants, and Parts

Recommended Fluids and Lubricants

The following fluid applies to the Camaro ZL1 only. For other fluids not listed here, see “Recommended Fluids and Lubricants” in the owner’s manual.

Usage	Fluid/Lubricant
Automatic Transmission (10 Speed)	DEXRON ULV Automatic Transmission Fluid (GM Part No. 19352619, in Canada 19352620).
Manual Transmission (6 Speed)	Manual Transmission Fluid (GM Part No. 88861800, in Canada 88861801).

Maintenance Replacement Parts

Replacement parts identified below by name, part number, or specification can be obtained from your dealer.

Part	GM Part Number	ACDelco Part Number
Engine Oil Filter	12640445	PF64
Spark Plugs	12642722	41-128

Technical Data

Vehicle Data

Capacities and Specifications 48
Engine Drive Belt Routing 50

Vehicle Data

Capacities and Specifications

The following approximate capacities are given in metric and English conversions.

The below values are for ZL1 (LT4 engine) vehicles only. For capacities and specifications for 1LE vehicles, see the owner's manual.

Application	Capacities	
	Metric	English
Engine Cooling System		
6.2L V8 Engine (LT4)	10.4 L	11.0 qt
Intercooler System	2.0 L	2.1 qt
Engine Oil with Filter	9.5 L	10.0 qt
Rear Axle Fluid (ZL1 Convertible Only)	1.1 L	1.2 qt
Rear Axle Fluid (Coupe Only with eLSD)	1.5 L	1.6 qt
Electronic Limited-Slip Differential (eLSD) Clutch System Lubricant (ZL1 and SS with the 1LE package)	160 ml	5.4 oz
All capacities are approximate. When adding, be sure to fill to the approximate level, as recommended in this manual. Recheck fluid level after filling		

Engine Specifications

Engine	VIN Code	Transmission	Spark Plug Gap	Firing Order
6.2L V8 Engine (LT4)	6	Automatic Manual	0.725–0.875 mm (0.029–0.034 in)	1–8–7–2–6–5–4–3

Engine Data

Engine	Horsepower	Torque	Displacement	Compression Ratio
6.2L V8 Engine (LT4)	650	650 lb ft	6.2L	10.0:1

Engine Drive Belt Routing

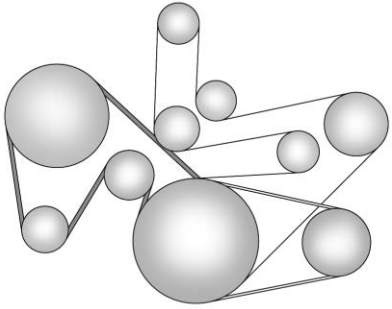

LT4 6.2L V8 Engine

Index

A

Air Cleaner/Filter, Engine 36
Air Filter
  Life System 35
Appearance Care
  Exterior 41
Automatic
  Transmission 22

B

Boost Gauge 6

C

Canadian Vehicle Owners 2
Capacities and Specifications 48
Cleaning
  Exterior Care 41
Cluster, Instrument 5
Competitive Driving Mode 24
Cooling System 37

D

Data Recorder
  Performance 8
Differential, Limited-Slip 27
Drive Belt Routing, Engine 50
Driving
  Competitive 24
Driving (cont'd)
  Track Events and
    Competitive 14

E

Engine
  Air Cleaner/Filter 36
  Compartment Overview 32
  Cooling System 37
  Drive Belt Routing 50
  Overheating 38
Engine Air Filter Life System 35

F

Filter,
  Engine Air Cleaner 36
Fuel
  Prohibited Fuels 29
  Recommended 29
  Top Tier 29

G

Gauges
  Boost 6

H

High-Speed Operation 39

I
Instrument Cluster 5
Introduction 2

L
Lap-Shoulder Belt 3
Limited-Slip Differential 27
Low-Profile Tires 38

M
Maintenance Schedule
  Recommended Fluids and
    Lubricants 46

O
Oil
  Engine 33
Overheating, Engine 38

P
Performance Data
  Recorder (PDR) 8
Prohibited Fuels 29

R
Recommended
  Fuel 29
Recommended Fluids and
  Lubricants 46
Replacement Parts
  Maintenance 46
Ride Control Systems
  Enhanced Traction
    System (ETS) 27
Routing, Engine Drive Belt 50

S
Seat Belts
  Lap-Shoulder Belt 3
Specifications and Capacities 48
Summer Tires 38
Supplement
  Using 2
System
  Engine Air Filter Life 35

T
Tires
  Low Profile 38
  Pressure 39
Top Tier Fuel 29
Towing
  Vehicle 40
Track Events and Competitive
  Driving 14
Traction
  Limited-Slip Differential 27
Transmission
  Automatic 22

U
Using This Supplement 2

V
Vehicle
  Canadian Owners 2
  Towing 40

U.S. Only

84075508 B