2007 DURAMAX® Diesel Engine

Features and Controls 3
Starting and Operating Your Vehicle 4

Instrument Panel 13
Warning Lights, Gages and Indicators 14

Driving Your Vehicle 25
Towing 26

Service and Appearance Care 27
Diesel Fuel Requirements and Fuel System 28
Checking Things Under the Hood 46
Capacities and Specifications 84

Maintenance Schedule 85
Maintenance Schedule 86

Index 109

General Motors, GM, GMC, CHEVROLET, the GM Emblem, the GMC Truck Emblem, the CHEVROLET Emblem, and the names SIERRA, SILVERADO, SAVANA and EXPRESS are registered trademarks of General Motors Corporation.

This manual contains information that pertains to the operation of your diesel engine. It also contains your Diesel Maintenance Schedule. The sections in this manual correspond to the sections in your owner manual. This manual, along with your owner manual, will assist you in the proper use and maintenance of your vehicle.

Keep this manual with the owner manual in your vehicle, so it will be there if you ever need it while you are on the road. If you sell your vehicle, leave this manual and the owner manual with the vehicle.

This manual includes the latest information at the time it was printed. We reserve the rights to make changes in the product after that time without notice.

Canadian Owners

A French language copy of this manual can be obtained from your dealer or from:

Helm, Incorporated
P.O. Box 07130
Detroit, MI 48207

Litho in U.S.A.
Part No. 15238979 A First Printing

©2006 General Motors Corporation. All Rights Reserved.

Section 2 Features and Controls

Starting and Operating Your Vehicle 4
Starting the Diesel Engine 4
Winter Cover (Pickup Models Only) 8
Fuel Operated Heater (FOH)
(Van Models Only) 10
Engine Coolant Heater 11

Starting and Operating Your Vehicle

Starting the Diesel Engine

Your diesel engine starts differently than a gasoline engine. As a safety feature, your vehicle will only start in the PARK (P) or the NEUTRAL (N) position.

Move your shift lever to PARK (P) or NEUTRAL (N). To restart when you're already moving, use NEUTRAL (N) only.

Notice: **Do not try to shift to PARK (P) if your vehicle is moving. If you do, you could damage the transmission. Shift to PARK (P) only when your vehicle is stopped.**

Starting Your Engine

1. Turn your ignition key to RUN.

   Observe the wait to start light. See *Wait to Start Light on page 19*. This light may not come on if the engine is hot.

2. As soon as the wait to start light goes off, immediately turn the ignition key to START. When the engine starts, let go of the key.

   Your engine has a fast warm-up glow plug system. The wait to start light will illuminate for a much shorter time than most diesel engines, due to the rapid heating of the glow plug system.

Notice: **If the wait to start light stays on after starting your vehicle, your vehicle may not run properly. Have your vehicle serviced right away.**

3. If the engine does not start after 15 seconds of cranking, turn the ignition key to LOCK. Wait one minute for the starter to cool, then try the same steps again.

If you're trying to start your engine after you've run out of fuel, follow the steps in *Running Out of Fuel on page 39*.

When your engine is cold, let it run for a few minutes before you move your vehicle. This lets oil pressure build up. Your engine will sound louder when it's cold.

Notice: **If you are not in an idling vehicle and the engine overheats, you would not be there to see the overheated engine indication. This could damage your vehicle. Do not let your engine run when you are not in your vehicle.**

Cold Weather Starting (Diesel Engine)

The following tips will help you get good starting in cold weather.

Use the recommended engine oil when the outside temperature drops below freezing. See *Engine Oil on page 49*. When the outside temperature drops below 0° F (–18°C), use of the engine coolant heater is recommended.

If you experience longer cranking times, notice an unusual amount of exhaust smoke or are at higher altitudes (over 7,000 ft. or 2 135 m), you may use your engine coolant heater. See *Engine Coolant Heater on page 11*.

See *Diesel Fuel Requirements and Fuel System on page 28* for information on what fuel to use in cold weather.

If Your Diesel Engine Won't Start

If you've run out of fuel, look at *Running Out of Fuel on page 39*. See *Diesel Fuel Requirements and Fuel System on page 28*.

If you're not out of fuel, and your engine won't start, do this:

Turn your ignition key to RUN. Immediately after the wait to start light goes off, turn the ignition key to START.

If the light doesn't go off, wait a few seconds, then try starting your engine again. See your dealer as soon as you can for a starting system check.

If the light comes on and then goes off and you know your batteries are charged, but your engine still won't start, your vehicle needs service.

If the light does not come on when the engine is cold, your vehicle needs service.

If your batteries don't have enough charge to start your engine, see "Battery" in the owner's manual Index.

Be sure you have the right oil for your engine, and that you've changed the oil at the proper times. If you use the wrong oil, your engine may be harder to start.

Be sure you are using the proper fuel for existing weather conditions. See *Diesel Fuel Requirements and Fuel System on page 28*.

If the engine starts, runs a short time, then stops, your vehicle needs service.

⚠ CAUTION:

Do not use gasoline or starting aids, such as ether, in the air intake. They could damage your engine. There could also be a fire, which could cause serious personal injury.

Elevated Idle

The engine has a cold temperature high idle feature which elevates the engines idle speed from 680 to 1200 rpms when outside temperatures are below 32°F (0°C), and the engine coolant temperature is below 150°F (65°C.) This feature enhances heater performance by raising the engine coolant temperature faster.

For pickup models, this feature can be turned off and on using the DIC steering wheel control buttons. If your vehicle is not equipped with the DIC steering wheel control buttons, do the following to turn on this feature:

1. Turn the ignition to RUN, with the vehicle off.
2. Press the accelerator pedal to the floor and hold while quickly pressing the brake pedal three times in less than eight seconds.
3. Release the accelerator pedal and start the engine.

When the engine is started, it will slowly ramp up to the high idle speed after a delay of a few seconds up to approximately two minutes. For this method to work properly there must be no throttle or brake pedal faults.

The engine idle speed will return to normal once the following conditions are met:

- Once engine coolant temperature reaches 150°F (65°C).
- Air intake temperature reaches 32°F (0°C).

The high idle speed will be temporarily interrupted and the engine speed will return to normal if any of the following conditions occur:

- The brake pedal is applied.
- The accelerator pedal is pressed.
- The transmission is shifted out of PARK (P) or NEUTRAL (N).
- Vehicle speed is detected.

Once these inputs are removed, the engine idle speed will slowly ramp back up to high idle after the normal delay, if the conditions for engine coolant temperature and air intake temperature are still met.

Manual High Idle System (Van Models Only)

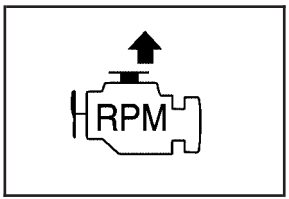

If your vehicle has this feature, the manual high idle switch is located on the instrument panel.

This system can be used to increase your engine idle speed whenever the following conditions are met:

- The brake pedal is not pressed.
- The vehicle speed is below about 5 mph (8 km/h).
- The transmission is in NEUTRAL (N) or PARK (P).

The manual high idle feature is activated by pressing the switch on the instrument panel. When the switch is pressed again, or any of the previous conditions are not met, manual high idle will be deactivated. The manual high idle has been preset at the factory. Your dealer may change the setting to fit your needs.

Winter Cover (Pickup Models Only)

If your vehicle includes a winter cover, it will enhance heater performance and will reduce the amount of time it takes to warm the inside of your vehicle in extremely cold conditions (below 0°F (–18°C)). The winter cover consists of two parts, the front bumper cover (if equipped) and the grille cover. The winter cover installs over the front bumper of your vehicle and restricts the air flowing to the engine compartment by covering the radiator grille.

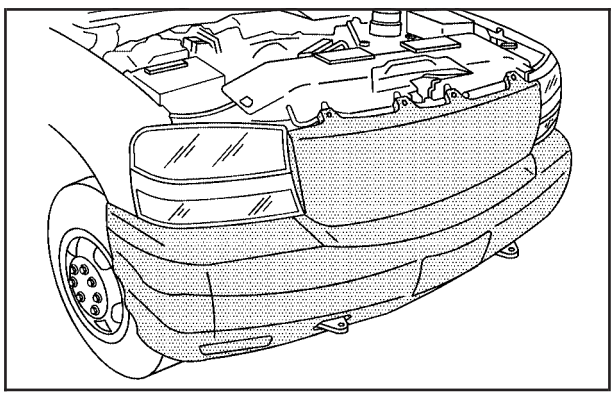

Usage Guidelines

The winter cover should only be used while operating your vehicle in extremely cold temperatures. In these temperatures, the vehicle does not need a large amount of air to properly cool the engine. During periods of operation when more airflow is required to cool the vehicle, the winter cover should not be used. The following usage guidelines will allow adequate airflow for proper radiator grille and air cooler performance:

- Do not use the winter cover when temperatures are expected to be above 32°F (0°C). Use of the cover in these conditions could cause your vehicle to overheat. If this happens while the cover is being used, remove the cover.
- Do not use the winter cover if towing a trailer. The added power needed to tow a trailer requires the radiator grille to have full airflow under all conditions. Your vehicle may overheat if the cover is used while towing a trailer.
- Do not modify the cover. The winter cover does not cover some sections of the front of the vehicle because these openings are needed to provide enough airflow to the radiator grille and air cooler in extremely cold temperatures.

- When the winter cover is used, the temperature sensor found on the inside rearview mirror will not function properly. The temperature that is shown will be incorrect.

Installation Instructions

The following instructions explain how to install and remove your vehicle's winter cover. When installing or removing the cover please refer to the "Usage Guidelines" mentioned previously. When you first try to fit the cover it may appear to be undersized. This is due to the nature of the special vinyl, which will stretch during installation to ensure a tight fit. For this reason, the initial installation of the cover is best performed when the winter cover is warm. If you are required to use a front license plate, simply cut the black stitches on the back of the patch.

Grille Cover Installation

1. Pre-bend all the small black tabs into the shape of a J.
2. Fasten the snaps.
3. Wrap the elastic loop around the hood stopper.
4. Hook all the tabs to the edge of the grille.
5. Hook all clips to the bottom of the grille.

Lower Cover Installation

1. Pre-bend all of the small black tabs into the shape of a J.

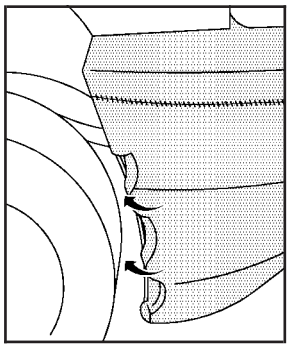

2. Fasten each tab to edge of the bumper, as illustrated.

To remove the winter cover, reverse the steps listed previously.

Fuel Operated Heater (FOH) (Van Models Only)

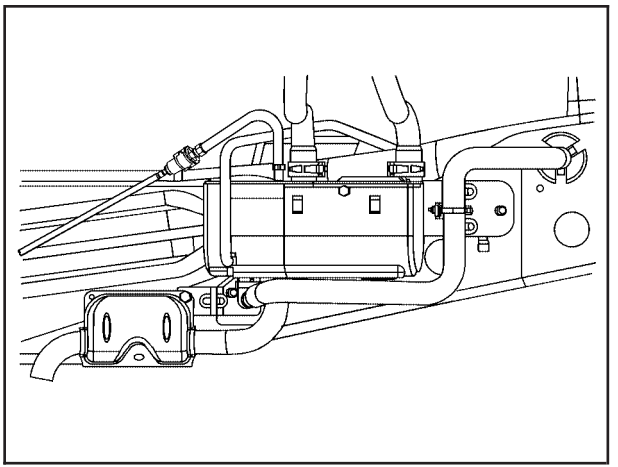

If your vehicle includes a FOH, it will enhance heater performance and will reduce the amount of time it takes to warm the inside of your vehicle in cold conditions below or equal to 39°F (4°C). The FOH is installed in the frame rail on the driver's side of the vehicle and uses diesel fuel to heat the engine coolant, which finally warms up the passenger's cabin air.

The FOH will turn on if all of the following conditions exist:

- Outside air temperature is below or equal to 39° F (4° C).
- Fuel level is greater or equal to 12.5 percent of the total fuel tank volume.
- The engine is running.
- Coolant temperature is less than 167° F (75° C).

Engine Coolant Heater

In very cold weather, 0°F (–18°C) or colder, the engine coolant heater can help. You'll get easier starting and better fuel economy during engine warm-up. Usually, the coolant heater should be plugged in a minimum of four hours prior to starting your vehicle.

To Use the Engine Coolant Heater

1. Turn off the engine.
2. Open the hood and unwrap the electrical cord. The cord is located in the engine compartment, on the passenger's side of the vehicle, near the right rear auxiliary battery.

3. Plug it into a normal, grounded 110-volt AC outlet.

⚠ CAUTION:

Plugging the cord into an ungrounded outlet could cause an electrical shock. Also, the wrong kind of extension cord could overheat and cause a fire. You could be seriously injured. Plug the cord into a properly grounded three-prong 110-volt AC outlet. If the cord will not reach, use a heavy-duty three-prong extension cord rated for at least 15 amps.

4. Before starting the engine, be sure to unplug and store the cord as it was before to keep it away from moving engine parts. If you don't, it could be damaged.

How long should you keep the coolant heater plugged in? The answer depends on the outside temperature. You may wish to use your coolant heater to improve ease of starting at temperatures between 0°F (–18°C) and –20°F (–29°C). Keep the coolant heater plugged in for a minimum of four hours. At temperatures below –20°F (–29°C), the coolant heater should remain plugged in for at least eight hours. It will not harm either the coolant heater or the vehicle to leave the coolant heater plugged in longer than the times stated. Be sure to remove and store the cord before starting the engine. See *Diesel Fuel Requirements and Fuel System on page 28* for information on what fuel to use in cold weather.

Section 3 Instrument Panel

Warning Lights, Gages and Indicators 14
Instrument Panel Cluster 14
Malfunction Indicator Lamp 16
Oil Pressure Gage 18
Wait to Start Light 19
Reduced Engine Power Light
(Van Models Only) 19
Fuel Gage 20
Water in Fuel Warning Light
(Van Models Only) 21
Driver Information Center (DIC)
(Pickup Models Only) 21

Warning Lights, Gages and Indicators

Instrument Panel Cluster

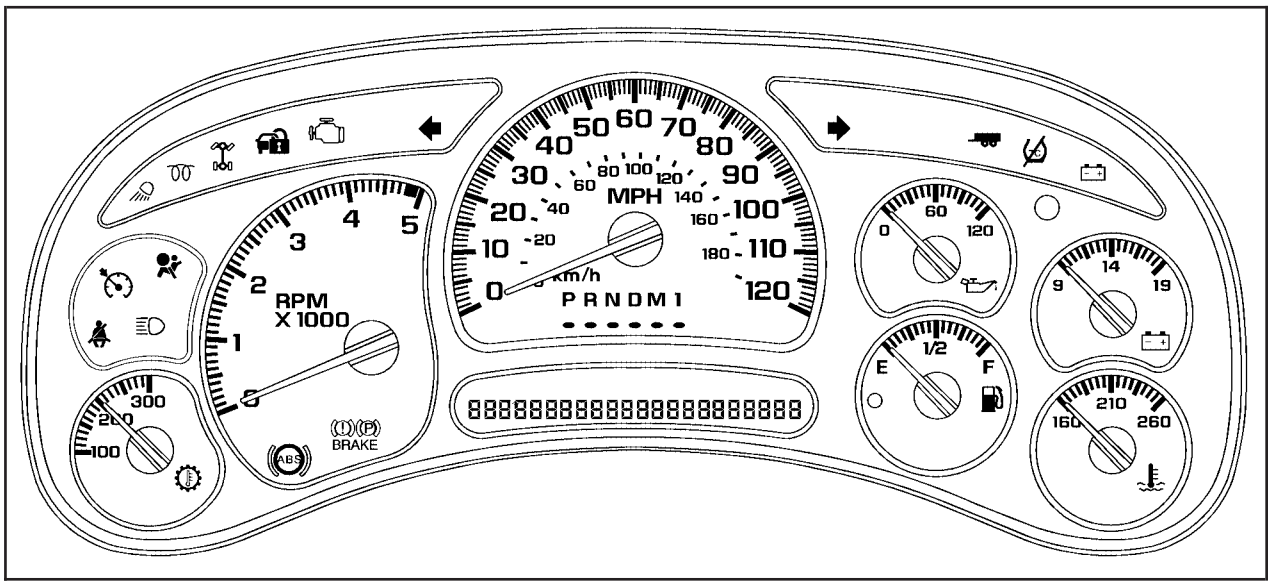

United States Pickup version shown, Canada similar

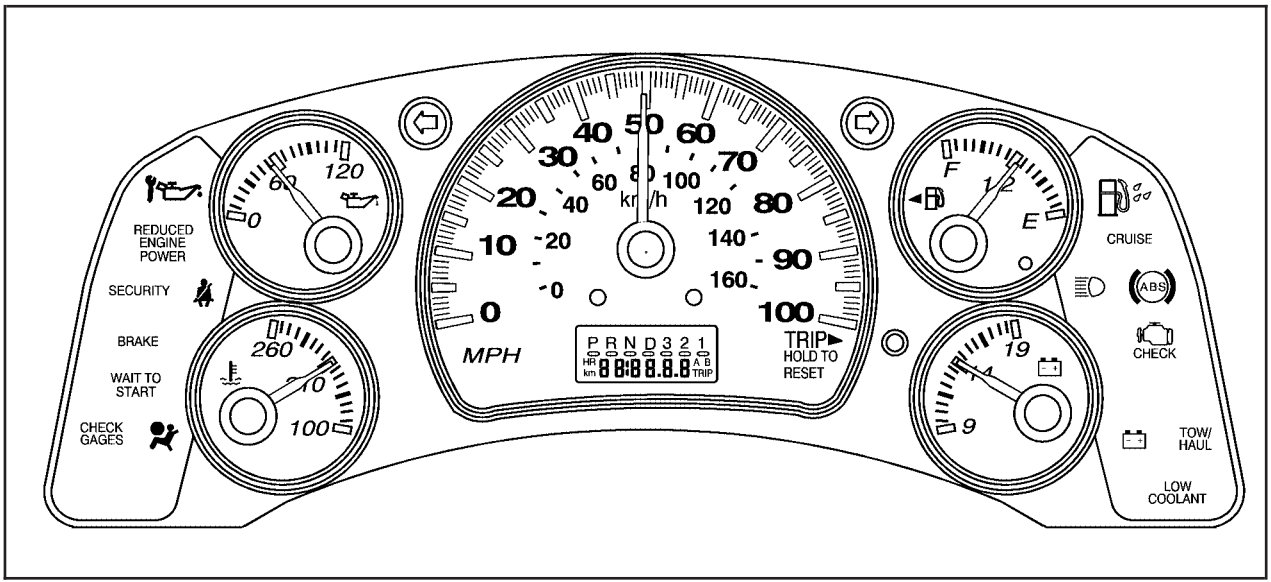

United States Van version shown, Canada similar

Your instrument cluster is designed to let you know at a glance how your vehicle is running. You'll know how fast you're going, about how much fuel you have and many other things you'll need to know to drive safely and economically.

Malfunction Indicator Lamp

Check Engine Light

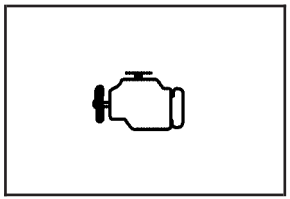

Pickup Models

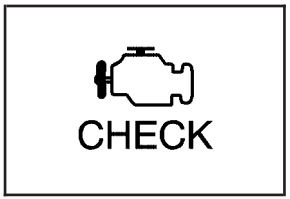

Van Models

Your vehicle has a computer which monitors operation of the fuel, timing, and emission control systems.

This system is called OBD II (On-Board Diagnostics-Second Generation) and is intended to assure that emissions are at acceptable levels for the life of the vehicle, helping to produce a cleaner environment. The check engine light comes on to indicate when service is required. Malfunctions often will be indicated by the system before any problem is apparent. This may prevent more serious damage to your vehicle. This system is also designed to assist your service technician in correctly diagnosing any malfunction.

Notice: **If you keep driving your vehicle with this light on, after awhile, your emission controls may not work as well, your fuel economy may not be as good, and your engine may not run as smoothly. This could lead to costly repairs that may not be covered by your warranty.**

Notice: **Modifications made to the engine, transmission, exhaust, intake, or fuel system of your vehicle or the replacement of the original tires with other than those of the same Tire Performance Criteria (TPC) can affect your vehicle's emission controls and may cause this light to come on. Modifications to these systems could lead to costly repairs not covered by your warranty. This may also result in a failure to pass a required Emission Inspection/Maintenance test.**

If the Light Comes On

This light should come on, as a check to show you it is working, when the ignition is on and the engine is not running. If it does not, have it repaired. This light will also come on if an emission control system malfunction has been detected on your vehicle. Diagnosis and service may be required.

You also may be able to correct the emission system malfunction by considering the following:

Did you just drive through a deep puddle of water?

If so, your electrical system may be wet. The condition will usually be corrected when the electrical system dries out. A few driving trips should turn the light off.

Are you low on fuel?

As your engine starts to run out of fuel, your engine may not run as efficiently as designed since small amounts of air are sucked into the fuel line. The system can detect this. Adding fuel should correct this condition. It will take a few driving trips to turn the light off.

If none of the above steps have made the light turn off, your dealer can check the vehicle. Your dealer has the proper test equipment and diagnostic tools to fix any mechanical or electrical problems that may have developed.

Emissions Inspection and Maintenance Programs

Some state/provincial and local governments have or may begin programs to inspect the emission control equipment on your vehicle. Failure to pass this inspection could prevent you from getting a vehicle registration.

Here are some things you need to know in order to help your vehicle pass an inspection:

Your vehicle will not pass this inspection if the check engine light is on or not working properly.

Your vehicle will not pass this inspection if the OBD (on-board diagnostic) system determines that critical emission control systems have not been completely diagnosed by the system. The vehicle would be considered not ready for inspection. This can happen if you have recently replaced your battery or if your battery has run down. The diagnostic system is designed to evaluate critical emission control systems during normal driving. This may take several days of routine driving. If you have done this and your vehicle still does not pass the inspection for lack of OBD system readiness, your dealer can prepare the vehicle for inspection.

Oil Pressure Gage

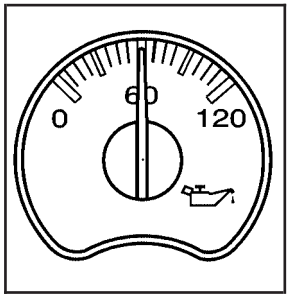

United States
(Pickup Models)

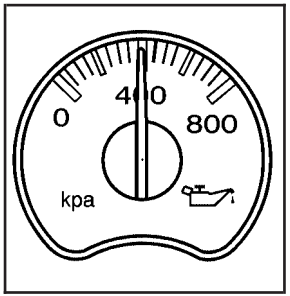

Canada (Pickup Models)

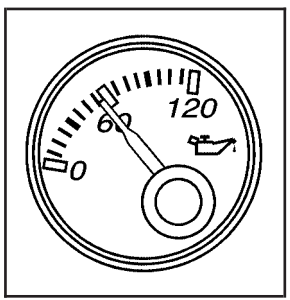

United States
(Van Models)

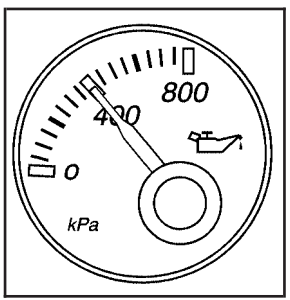

Canada (Van Models)

The oil pressure gage shows the engine oil pressure in psi (pounds per square inch) when the engine is running. Canadian vehicles indicate pressure in kPa (kilopascals).

Oil pressure may vary under different driving conditions and oil types. The DURAMAX® engine may generate oil pressure in excess of 80 psi (548 kPa) under certain conditions, especially in cold temperatures. This is a normal operating range.

⚠ CAUTION:

Do not keep driving if the oil pressure is low. If you do, your engine can become so hot that it catches fire. You or others could be burned. Check your oil as soon as possible and have your vehicle serviced.

Notice: **Lack of proper engine oil maintenance may damage the engine. The repairs would not be covered by your warranty. Always follow the maintenance schedule in this manual for changing engine oil.**

Wait to Start Light

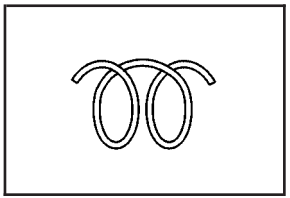

Your diesel engine has a glow plug system to aid in starting your vehicle.

For pickup models, this light shows that the system is functioning properly and tells you when the engine is ready to be started. For van models, an instrument panel WAIT TO START indicator light shows that the system is functioning properly and tells you when the engine is ready to be started.

Your vehicle has a fast warm-up glow plug system. The wait to start light will illuminate for a considerably shorter time than most diesel engines due to the rapid heating of the glow plug system.

For more information, see *Starting the Diesel Engine on page 4*.

Reduced Engine Power Light (Van Models Only)

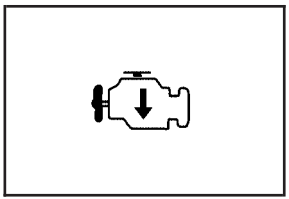

If the reduced engine power light comes on while you are driving, the computer is indicating that your vehicle has a problem.

You should take your vehicle in for service soon.

Fuel Gage

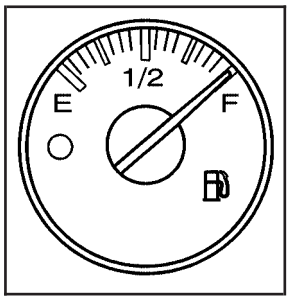

Pickup Models, United States version shown

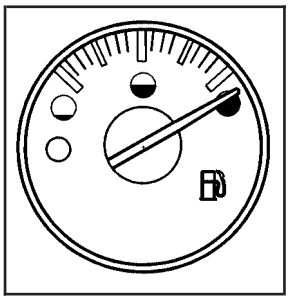

Pickup Models, Canada version shown

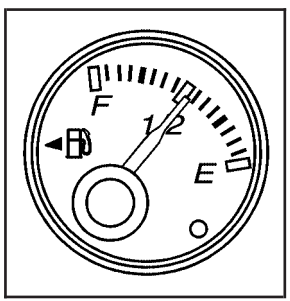

Van Models

When the ignition is on, the fuel gage shows you approximately how much fuel you have left in your tank. The gage will first indicate E (empty) before you are out of fuel, but you should get more fuel as soon as possible.

Listed are four situations you may experience with your fuel gage:

- At the gas station, the fuel pump shuts off before the gage reads F (full).
- It takes a little more or less fuel to fill up than the fuel gage indicated. For example, the gage may have indicated the tank was half full, but it actually took a little more or less than half the tank's capacity to fill the tank.
- The gage moves a little when you turn a corner or speed up.
- The gage doesn't go back to E (empty) when you turn off the ignition.

None of these indicate a problem with the fuel gage.

For information on how to fill your fuel tank, see *Filling the Tank on page 43*.

Your vehicle also has a fuel cooler. To clean, powerwash the bottom of the vehicle.

Water in Fuel Warning Light (Van Models Only)



The light will come on to warn you if there is water in the diesel fuel system.

For more information on how this light works, see *Diesel Fuel Requirements and Fuel System on page 28*.

Driver Information Center (DIC) (Pickup Models Only)

The Driver Information Center (DIC) is located on the instrument panel cluster above the steering wheel. The DIC comes on when the ignition is on. After a short delay the DIC will display the current driver and the information that was last displayed before the engine was last turned off.

If a problem is detected, a warning message will appear on the display. Pressing the select button on the DIC steering wheel buttons, or the trip odometer reset stem for vehicles without DIC steering wheel buttons, will acknowledge some current warning or service messages.

Some messages that your DURAMAX® diesel may show are:

ELEVATED IDLE OFF

This message will appear when the elevated idle/exhaust restrictor feature has been turned off. For more information on the elevated idle/exhaust restrictor feature, see *Starting the Diesel Engine on page 4*.

ELEVATED IDLE ON

This message will appear when the elevated idle/exhaust restrictor feature has been turned on. For more information on the elevated idle/exhaust restrictor feature, see *Starting the Diesel Engine on page 4*.

REDUCED ENGINE POWER

A computer monitors the operation of the electric accelerator. If the REDUCED ENGINE POWER message comes on while you are driving, the computer is indicating that your vehicle has a problem. You should take your vehicle in for service soon.

WATER IN FUEL

The WATER IN FUEL message will come on to warn you if there is water in the diesel fuel system. This message will come on to warn you if there is water in the diesel fuel system. For more information on how this message works, see *Diesel Fuel Requirements and Fuel System on page 28*.

FUEL FILTER LIFE ###%

This feature is available on vehicles with steering wheel controls. When the fuel button is pressed and FUEL FILTER LIFE appears on the display, this information will give the percentage of fuel filter life remaining.

FUEL FILTER LIFE RESET

This message will appear when a reset is performed either by using the steering wheel controls or the following manual procedure.

For vehicles with steering wheel controls, press and hold the select button for five seconds while the FUEL FILTER LIFE message is displayed. This message will appear on the DIC for ten seconds.

For vehicles without steering wheel controls, do the following:

1. Without pressing the pedals, turn the ignition key to the on position without starting the engine.
2. Wait five seconds.
3. Completely press the brake and the accelerator pedals simultaneously and hold for ten seconds. The system is now reset.
4. Turn the ignition key off.

The next time the engine is started, the message will no longer be displayed. Always reset the FUEL FILTER LIFE system after a fuel filter change.

CHANGE FUEL FILTER

This message will appear on the DIC for ten seconds when a fuel filter change is required. See *Fuel Filter Replacement on page 40* for more information.

NOTES

Section 4 Driving Your Vehicle

Towing 26
Towing a Trailer 26

Towing

Towing a Trailer

When towing at high altitude on steep uphill grades, consider the following:

Engine coolant will boil at a lower temperature than sea level. If you turn your engine off immediately after towing at high altitude on steep uphill grades, your vehicle may show signs similar to engine overheating.

To avoid this, let the engine run while parked (preferably on level ground) with the transmission in PARK (P) and the park brake applied for at least five minutes before turning the engine off. If you do get the overheat warning, see *Engine Overheating on page 71*.

Section 5 Service and Appearance Care

Diesel Fuel Requirements and Fuel System 28
Diesel Engine Fuel 28
What Fuel to Use 29
Very Cold Weather Operation 31
Water in Fuel 32
Water in Fuel Light Chart 33
Running Out of Fuel 39
Fuel Filter Replacement 40
Filling the Tank 43
Filling a Portable Fuel Container 45

Checking Things Under the Hood 46
Engine Compartment Overview 46
Engine Oil 49
Engine Oil Life System 52
Engine Air Cleaner/Filter 54
Automatic Transmission Fluid 57
Engine Coolant 65
Coolant Surge Tank Pressure Cap 71
Engine Overheating 71
Cooling System 73

Capacities and Specifications 84
Specification Charts 84

Diesel Fuel Requirements and Fuel System

Some states and provinces have restrictions on the purchase of diesel fuel for light-duty vehicles and require you to buy permits or pay special taxes. Some of these restrictions apply only to residents, and others apply to both residents and visitors. These restrictions can change. To learn the current restrictions in any state or province, contact your auto club, the police or other officials.

Diesel Engine Fuel

Notice: **Diesel fuel or fuel additives not recommended in this manual could damage your fuel system, fuel-operated heater (FOH) (Van models only) and engine. Your warranty would not cover this damage. And:**

- **Diesel fuel that has been mixed with engine oil or automatic transmission fluid could damage your engine and emission controls.**
- **Aftermarket diesel fuel additives are not tested by General Motors. Some additives, particularly those which contain alcohol or water emulsifiers, may damage your fuel system. If you believe that unique circumstances call for a fuel additive to be used, consult your dealer for advice.**
- **If you ever run out of diesel fuel, it can be difficult to restart your engine. To avoid this, never let your tank get empty.**

If gasoline is ever accidentally added to the fuel tank, to avoid severe engine damage, do not run the engine until the fuel tank can be drained.

If you run out of fuel, *Running Out of Fuel on page 39* tells you how to restart your engine.

What Fuel to Use

In the United States, for best results use No. 2-D diesel fuel year-round (above and below freezing conditions) as oil companies blend No. 2-D fuel to address climate differences. No. 1-D diesel fuel may be used in very cold temperatures (when it stays below 0°F or −18°C); however, it will produce a power and fuel economy loss. Avoid the use of No. 1-D diesel fuel in warm or hot climates. It may result in stalling, poor starting when the engine is hot, and may damage the fuel injection system.

It is important that diesel-powered trucks are refueled only with ultra low-sulfur fuel. The emission control system requires the use of diesel fuel with ultra low-sulfur (0.0015% by weight, or 15 ppm, maximum) content. Both ultra low-sulfur and higher sulfur diesel fuels are available in the United States and ultra low-sulfur diesel fuel is available in Canada. However, only higher sulfur diesel fuel is available in Mexico. Use of fuels with higher-sulfur content will affect the function of the emission components and may cause reduced performance, excessive smoke, and unpleasant odor.

At a minimum, the diesel fuel you use should meet the latest version of ASTM specification D 975 (Grades No. 2-D or No. 1-D S15 commonly known as Ultra Low Sulfur diesel) in the United States. In addition, the Engine Manufacturers Association (EMA) has identified properties of an improved diesel fuel for better engine performance and durability. Diesel fuels corresponding to the EMA Recommended Guideline on Premium Diesel Fuel (FQP-1A) could provide better starting, less noise, and better vehicle performance. If there are questions about the fuel you are using, contact your fuel supplier.

It is acceptable to use diesel fuel containing up to 5% biodiesel (B5), but the final blended fuel must meet the same specification, ASTM D 975 (Grades No. 2-D or No. 1-D S15 commonly known as Ultra Low Sulfur diesel), as other fuels used in your vehicle, and the biodiesel used for making this fuel must meet the latest version of ASTM specification D 6751. Biodiesel is produced from vegetable oils or animal fat that have been chemically modified to reduce the possibility of damage to your fuel system and engine.

Higher concentration (i.e., greater than B5) biodiesel-containing fuels or the use of unmodified bio-oils blended into diesel fuel at any concentration is not recommended and could damage your fuel system and engine. Such damage would not be covered by your warranty. If there are questions about the biodiesel-containing fuels you are using, contact your fuel supplier.

Diesel fuel may foam when you fill your tank. This can cause the automatic pump nozzle to shut off, even though your tank is not full. If this happens, just wait for the foaming to stop and then continue to fill your tank. See *Filling the Tank on page 43*.

⚠ CAUTION:

Heat coming from the engine may cause the fuel to expand and force the fuel out of your tank. If something ignites the fuel, a fire could start and people could be burned. To help avoid this, fill your fuel tank only until the automatic nozzle shuts off. Do not try to top it off.

What Fuel to Use in Canada

Canadian fuels are blended for seasonal changes. Diesel Type “A” fuel is blended for better cold weather starting (below 0°F or –18°C); however, you may notice some power and fuel economy loss. If Type “A” fuel is used in warmer temperatures, stalling and hard starting may occur. Diesel Type “B” fuel is blended for temperatures above 0°F (–18°C).

It is important that diesel-powered trucks are refueled only with ultra low-sulfur fuel. The emission control system requires the use of diesel fuel with ultra low-sulfur (0.0015% by weight, or 15 ppm, maximum) content. Both ultra low-sulfur and higher sulfur diesel fuels are available in the United States. Use of fuels with higher-sulfur content will affect the function of the emission components and may cause reduced performance, excessive smoke, and unpleasant odor.

At a minimum, the diesel fuel you use should meet the latest version of specification CAN/CGSB-3.517 (Low Sulfur Diesel) in Canada. In addition, the Engine Manufacturers Association (EMA) has identified properties of an improved diesel fuel for better engine performance and durability (FQP-1A).

Diesel fuels corresponding to the EMA description could provide better starting, less noise, and better vehicle performance. If there are questions about the fuel you are using, contact your fuel supplier.

It is acceptable to use diesel fuel containing up to 5% biodiesel (B5), but the final blended fuel must meet the same specification, CAN/CGSB-3.517 (Low Sulfur Diesel) in Canada, as other fuels used in your vehicle, and the biodiesel used for making this fuel must meet the latest version of ASTM specification D 6751. Biodiesel is produced from vegetable oils or animal fat that have been chemically modified to reduce the possibility of damage to your fuel system and engine. Higher concentration (i.e., greater than B5) biodiesel-containing fuels or the use of unmodified bio-oils blended into diesel fuel at any concentration is not recommended and could damage your fuel system and engine. Such damage would not be covered by your warranty. If there are questions about the biodiesel-containing fuels you are using, contact your fuel supplier.

Very Cold Weather Operation

Follow the instructions listed previously under the heading “What Fuel to Use.”

Notice: **Never use home heating oil or gasoline in your diesel engine. They can cause engine damage.**

In cold weather, your fuel filter may become clogged (waxed). To unclog it, move the vehicle to a warm garage area and warm the filter to between 32°F and 50°F (0°C to 10°C). You will not need to replace it. Additional information on the fuel filter follows.

Water in Fuel

⚠ CAUTION:

Diesel fuel containing water is still flammable. You could be burned. If you ever try to drain water from your fuel, keep sparks, flames and smoking materials away from the mixture.

Notice: **If there is water in your diesel fuel and the weather is warm or humid, fungus and bacteria can grow in the fuel. They can damage your fuel system and fuel operated heater (FOH) (if equipped). A diesel fuel biocide can be used to sterilize your fuel system. However, your fuel system may still need to be cleaned. Your dealer can advise you of the appropriate solution.**

If your fuel tank needs to be purged to remove water, see your dealer or a qualified technician. Improper purging can damage your fuel system and block your FOH.

Sometimes, water can be pumped into your fuel tank along with your diesel fuel. This can happen if a service station doesn't regularly inspect and clean its fuel tanks, or if it gets contaminated fuel from its suppliers.

If you have a pickup model and this happens, a WATER IN FUEL message will appear on the Driver Information Center (DIC). The water must be drained.



If you have a van model and this happens, this water in fuel warning light will appear on the instrument panel cluster.

The water must be drained from both chassis mounted fuel filters. Your dealer can show you how to do this.

Water in Fuel Light Chart

If the WATER IN FUEL DIC message or water in fuel warning light comes on, use this chart.

Water In Fuel Light/Message Chart

Problem	Recommended Action
Light/Message comes on intermittently.	Drain water from fuel filter.
Light/Message stays on:	
• At temperatures above freezing.	Drain fuel filter immediately. If no water can be drained and light stays on, see your dealer for assistance.
• At temperatures below freezing.	Drain fuel filter immediately. If no water can be drained — water may be frozen in water drain system. Water may be frozen in the fuel lines. Move the vehicle to a warm location to thaw out, and then drain filter system.

Water In Fuel Light/Message Chart (cont'd)

Problem	Recommended Action
• Immediately after refueling, large amount of water possibly pumped into fuel tank.	Fuel tank purging required. See your dealer for assistance.

Notice: **If you drive when this warning indicator is on, you can damage your fuel injection system and your engine. If the indicator comes on right after you refuel, it means water was pumped into your fuel tank. Turn off your engine immediately. Then, have the water drained at once.**

Hard starting, hesitation or flat performance at high speed or during hard acceleration may be an indication of premature fuel filter plugging due to dirty or contaminated fuel. The filter element may need to be changed if this happens. See *Fuel Filter Replacement on page 40*.

To drain water, do the following:

1. Stop and park the vehicle in a safe place. Turn off the engine and apply the parking brake.
2. Remove the fuel cap.
3. Place a fuel-resistant container under the fuel filter(s). For pickup models, the filter drain valve is located in the engine compartment, on the passenger's side of the vehicle, on the bottom of the fuel filter. For van models, the filter drain valves for the primary and secondary fuel filters are located in the chassis (inside frame rail) compartment. They are on the driver's side of the vehicle, below the fuel filters.

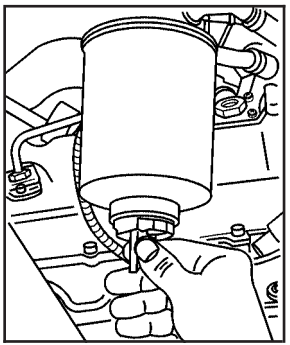

4. For pickup models, open the drain valve by turning it two to three turns. When fuel empties from the valve, all the water has been drained. Close the valve hand tight. To help remove all the water, press the priming pump several times.

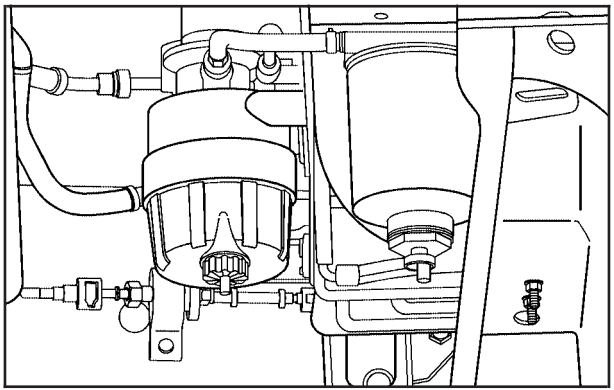

5. For van models, in order to drain the water from the system, you will have to repeat the operation for the primary and secondary fuel filters.
6. Remove the fuel-resistant container and properly dispose of the contaminated fuel. To find out how to properly dispose of contaminated diesel fuel, see “What to Do With Used Oil” under *Engine Oil on page 49*.
7. Install the fuel cap.
8. For pickup models, start the engine and let it run for a few minutes. If the engine stalls, the fuel system may need to be primed. While draining the water from the fuel filter, air may enter the fuel system. If air has entered the fuel system the fuel system will need to be primed. For van models, start the engine and let it run for a few minutes.

If the WATER IN FUEL message/warning light comes on again after driving a short distance or the engine runs rough or stalls, a large amount of water has probably been pumped into the fuel tank. The fuel tank should be purged.

Fuel Priming

In order for the fuel system to work properly, the fuel lines must be full of fuel and contain no air. If air gets into the fuel lines, it will be necessary to prime the fuel lines to eliminate air before operating the vehicle and the fuel operated heater (FOH).

Q: How does air get into the fuel lines?

A: One of the following may have happened:

- The vehicle ran out of fuel
- The fuel filter was removed for servicing or replacement
- The fuel lines were removed or disconnected for servicing
- The fuel filter water drain valve was opened while the engine was running
- The fuel operated heater (FOH) pump and FOH fuel lines were removed or disconnected for servicing.

If one or more of the above occur, it is very likely that air has entered your fuel system and that you will need to prime the fuel system before operating the vehicle. Air in the fuel lines will not harm the engine, the fuel operated heater (FOH) or the vehicle.

However, the engine and/or the fuel operated heater (FOH) may not be able to start until the fuel system is primed and the air is removed.

Q: How do I prime the vehicle? (Pickup Models)

A: Your vehicle is equipped with a priming pump which is part of the engine mounted fuel filter. The priming pump is hand operated (pickup only) and is designed to bring fuel to the engine to eliminate any air that may be in the fuel lines. To prime the engine, do the following:

1. You must correct the condition which caused the loss of prime by making sure there is fuel in the tank.
2. Make sure the fuel filter has been installed and properly tightened.

3. Make sure the fuel lines are properly connected and the fuel filter is cool enough to touch.
4. Remove any dirt from the fuel filter head and vent valve by wiping with a cloth.

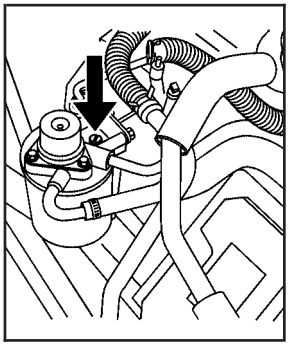

5. Open the fuel filter vent valve by turning the screw counterclockwise several full turns. The vent valve is located on top of the fuel filter housing.

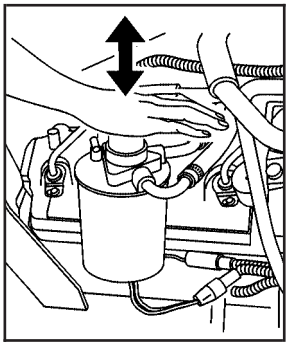

6. Repeatedly push down on the fuel filter priming pump with the palm of your hand. The pump is located on top of the fuel filter housing. Let the pump return upward between pushes.
7. Operate the priming pump until a small amount of fuel seeps from the vent valve. When you see the fuel, the filter is now full of fuel and the system should be primed.
8. Close the vent valve. Clean any fuel which accumulated on the fuel filter. Start the engine and let idle for a few minutes. Check the filter for leaks.

Q: How do I prime the vehicle? (Van Models)

A: Your vehicle is equipped with an electric priming pump which is located in front of the fuel tank under your vehicle. The priming pump is operated electrically and is designed to bring fuel to the engine to eliminate any air that may be in the fuel lines. To prime the engine, do the following:

1. Turn the ignition key on for two minutes. The fuel pump will be operating and starting the priming process. Do not start the engine during the first two minutes.
2. After completing the initial prime in Step 1, turn the ignition off, then back to start and crank the engine for 15 seconds.
3. If the engine does not start, repeat Steps 1 and 2 until the engine starts.
4. If the engine does not run after repeating Steps 1 and 2 three times, turn the ignition key off for 60 seconds, allowing the Electronic Control Module (ECM) to reset.
5. Repeat the above steps until the engine starts.
6. If the engine runs, but does not run smoothly, increase the engine speed slightly by pressing the accelerator pedal. This will help to force out air through the system.
7. If the engine starts and runs but stalls again, turn the ignition key off for 60 seconds to reset the ECM and repeat the steps above.
8. When the engine starts, let it idle for a few minutes and check the filters for any leaks.

Q: How do I prime the fuel operated heater (FOH) fuel lines (Van Models)?

A: See your dealer or qualified technician if the FOH fuel lines need to be primed.

Running Out of Fuel

Pickup Models

If the engine stalls and you think that you have run out of fuel, do this to restart your engine:

> **⚠ CAUTION:**
>
> **Diesel fuel is flammable. It could start a fire if it gets on hot engine parts. You could be burned. Do not let too much fuel flow from the air bleed valve, and wipe up any spilled fuel with a cloth.**

1. If you are parked on a level surface, add at least two gallons of fuel. However, if you are parked on a slope, you may need to add up to five gallons of fuel.
2. Follow the fuel priming procedure earlier in this section to prime the fuel filter.
3. Close the air bleed valve.
4. Turn the ignition key to START for 10 to 15 seconds at a time until your engine starts. If the engine tries to run, but does not run smoothly, increase the rpm a little using the accelerator pedal. This will help force air through the system.

Van Models

If the engine stalls and you think that you may have run out of fuel, do this to restart your engine:

1. If you are parked on a level surface, add at least one gallon of fuel. However, if you are parked on a slope, you may need to add up to five gallons of fuel.
2. Follow the vehicle fuel system priming procedure earlier in this section to re-prime the system and re-start the engine.

Your check engine light may come on if the vehicle has run out of fuel. This light may stay on for a few drive cycles after the condition is corrected, but will eventually clear itself.

The fuel operated heater stops automatically when the fuel tank volume is less or equal to 10 percent of the total tank volume. If the vehicle runs out of fuel, the FOH fuel lines will not need to be primed because they will still have fuel remaining.

Fuel Filter Replacement

Pickup Models

If you want to change the fuel filter yourself, here's how to do it:

> **⚠ CAUTION:**
>
> **Diesel fuel is flammable. It could start a fire if something ignites it, and you could be burned. Do not let it get on hot engine parts, and keep matches or other ignition sources away.**

First, drain any water from the filter following the procedure for draining water listed previously.

Your vehicle's engine should be off until the end of this procedure.

The fuel filter is located in the engine compartment on the passenger's side of the vehicle, or on the driver's side frame rail in front of the fuel tank.

1. Apply the parking brake.

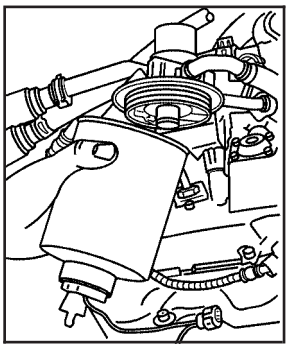

2. Unplug the water sensor wire connected to the fuel filter and unscrew the filter element.

3. Remove the filter element. If there is any dirt on the filter sealing surface, clean it off. Remove and reuse the water sensor float switch located on the bottom of the fuel filter.

4. Install the new filter element.
5. Reinstall and tighten the filter container and reconnect the water sensor wire to the filter.
6. Use the fuel filter priming procedure earlier in this section to prime the fuel filter.
7. Tighten the air bleed valve by turning it clockwise until hand tight.
8. Start your engine and let it idle for five minutes. Check your fuel filter and air bleed valve for leaks.
9. Reset the fuel filter monitor. See *Driver Information Center (DIC) (Pickup Models Only) on page 21* for more information.

Van Models

If your fuel operated heater (FOH) is not working, your FOH line requires priming. See your dealer for service. See *Fuel Operated Heater (FOH) (Van Models Only) on page 10* for more information.

If you want to change the fuel filter yourself, here's how to do it:

⚠ CAUTION:

Diesel fuel is flammable. It could start a fire if something ignites it, and you could be burned. Do not let it get on hot engine parts, and keep matches or other ignition sources away.

First, drain any water from the filter following the procedure for draining water listed previously.

Your vehicle's engine should be off until the end of this procedure.

The fuel filters are located on the driver's side frame rail in front of the fuel tank.

Primary Filter (A)

1. Apply the parking brake.

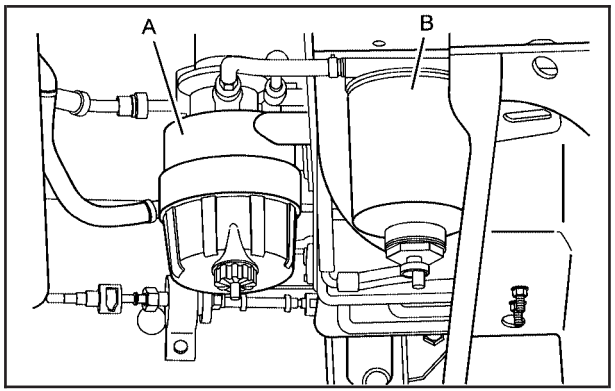

2. Unplug the water sensor wire connected to the fuel filter (lowest wire) and unscrew the filter's cap.
3. Remove the filter element. If there is any dirt on the filter sealing surface, clean it off.
4. Install the new filter element.
5. Reinstall and tighten the filter's cap and reconnect the water sensor wire to the filter.
6. Prime the fuel system.
7. Start your engine and let it idle for five minutes.

Secondary Filter (B)

1. Apply the parking brake.
2. Unscrew the filter element.
3. Remove the filter element. If there is any dirt on the filter sealing surface, clean it off. Remove and reuse the water drain valve located at the bottom of the fuel filter.
4. Install and tighten the new filter element.
5. Prime the fuel system.
6. Start your vehicle and let it idle for five minutes.

Filling the Tank

⚠ CAUTION:

Fuel vapor burns violently and a fuel fire can cause bad injuries. To help avoid injuries to you and others, read and follow all the instructions on the pump island. Turn off your engine when you are refueling. Do not smoke if you are near fuel or refueling your vehicle. Keep sparks, flames, and smoking materials away from fuel. Do not leave the fuel pump unattended when refueling your vehicle. This is against the law in some places. Keep children away from the fuel pump; never let children pump fuel.

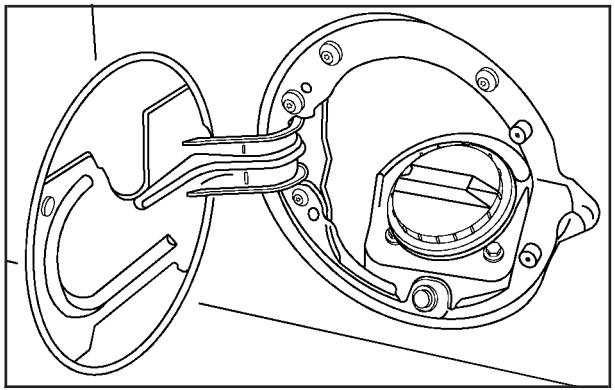

The green fuel cap is located behind a hinged door on the driver's side of the vehicle.

For chassis-cab models, refuel the front tank first, or in instances when only a partial fuel fill is desired. An automatic transfer mechanism will maintain approximately equal fuel levels in both tanks, so no switching is required by the operator.

To remove the fuel cap, turn it slowly to the left (counterclockwise).

⚠ CAUTION:

If you spill fuel and then something ignites it, you could be badly burned. Fuel can spray out on you if you open the fuel cap too quickly. This spray can happen if your tank is nearly full, and is more likely in hot weather. Open the fuel cap slowly and wait for any hiss noise to stop. Then unscrew the cap all the way.

Be careful not to spill diesel fuel. Don't top off or overfill your tank, and wait a few seconds after you've finished pumping before you remove the nozzle. Clean fuel from painted surfaces as soon as possible. See "Washing Your Vehicle" in your owner's manual. When you put the fuel cap back on, turn it to the right (clockwise) until you hear a clicking sound. Make sure you fully install the cap.

⚠ CAUTION:

If a fire starts while you are refueling, do not remove the nozzle. Shut off the flow of fuel by shutting off the pump or by notifying the station attendant. Leave the area immediately.

Notice: **If you need a new fuel cap, be sure to get the right type. Your dealer can get one for you. If you get the wrong type, it may not fit properly.**

Notice: **If your vehicle has been accidentally filled with gasoline, do not run the engine or severe engine damage can occur. Contact your dealer to have the fuel system flushed.**

Filling a Portable Fuel Container

⚠ CAUTION:

Never fill a portable fuel container while it is in your vehicle. Static electricity discharge from the container can ignite the fuel vapor. You can be badly burned and your vehicle damaged if this occurs.

CAUTION: (Continued)

CAUTION: (Continued)

To help avoid injury to you and others:

- **Dispense fuel only into approved containers.**
- **Do not fill a container while it is inside a vehicle, in a vehicle's trunk, pickup bed, or on any surface other than the ground.**
- **Bring the fill nozzle in contact with the inside of the fill opening before operating the nozzle. Contact should be maintained until the filling is complete.**
- **Do not smoke while pumping fuel.**

Checking Things Under the Hood

Engine Compartment Overview

When you open the hood on the 6.6L DURAMAX® ® Diesel Engine, you will see the following:

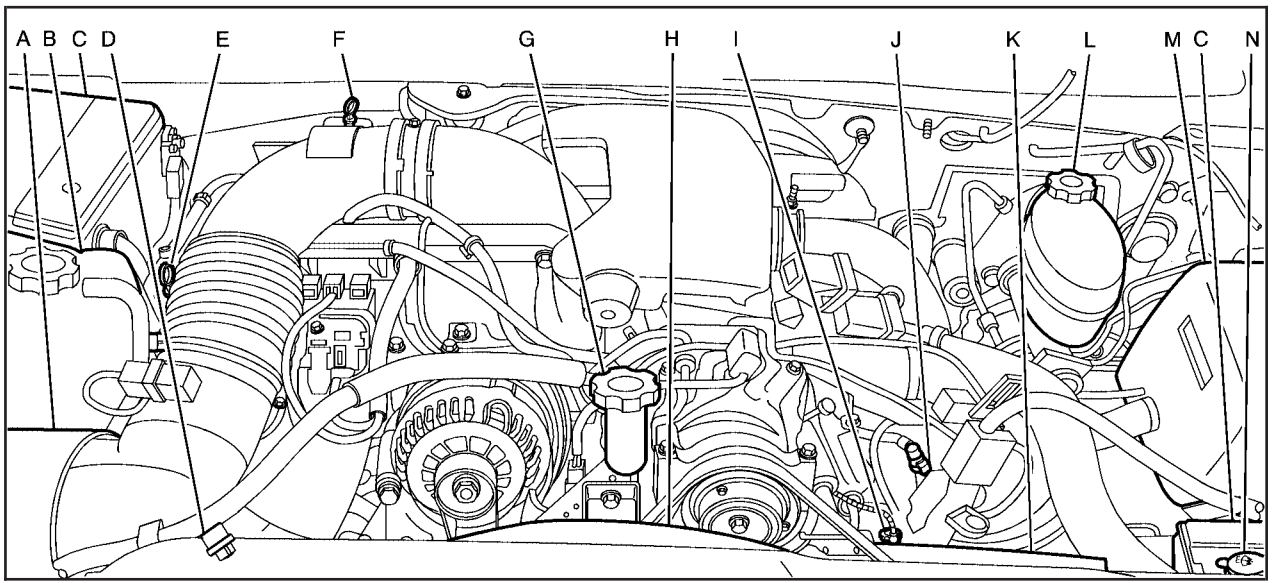

United States Pickup models shown, Canada similar

A. Engine Air Cleaner/Filter
B. Coolant Surge Tank
C. Battery
D. Engine Air Cleaner/Filter Restriction Indicator (If Equipped)
E. Engine Oil Dipstick
F. Automatic Transmission Dipstick
G. Engine Oil Fill Cap
H. Engine Fan
I. Power Steering Fluid Reservoir
J. Remote Negative (–) Terminal
K. Remote Positive (+) Terminal
L. Brake Fluid Reservoir
M. Underhood Fuse Block
N. Windshield Washer Fluid Reservoir

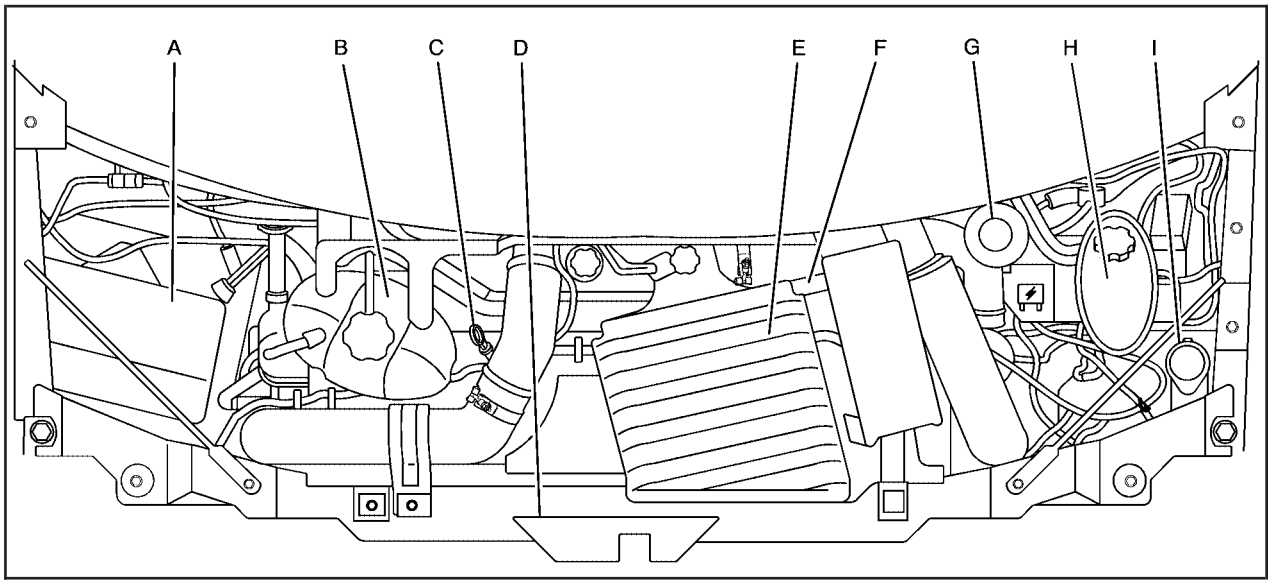

United States Van models shown, Canada similar

A. Battery
B. Coolant Surge Tank
C. Automatic Transmission Dipstick
D. Engine Fan
E. Engine Air Cleaner/Filter
F. Air Cleaner/Filter Restriction Indicator
G. Power Steering Fluid Reservoir
H. Brake Fluid Reservoir
I. Windshield Washer Fluid Reservoir

Engine Oil

Checking Engine Oil

It is a good idea to check the engine oil level every time you get fuel.

The engine oil dipstick handle is a yellow loop. See *Engine Compartment Overview on page 46* for the location of the engine oil dipstick.

In order to get an accurate reading, the oil must be warm, at normal operating temperature, and the vehicle must be on level ground.

1. Turn off the engine and give the oil at least five minutes to drain back into the oil pan. With a cool engine, allow 30 minutes. If you do not do this, the oil dipstick might not show the actual level.
2. Pull out the dipstick and clean it with a paper towel or a cloth, then push it back in all the way. Remove it again, keeping the tip down.

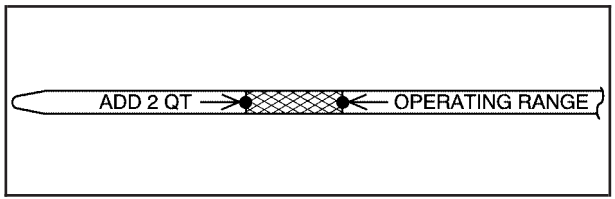

When to Add Engine Oil

If the oil is below the cross-hatched area at the tip of the dipstick, you will need to add at least two quarts/liters of oil. But you must use the right kind. This section explains what kind of oil to use. For engine oil crankcase capacity, see *Specification Charts on page 84*.

Notice: **Do not add too much oil. If the engine has so much oil that the oil level gets above the cross-hatched area that shows the proper operating range, the engine could be damaged.**

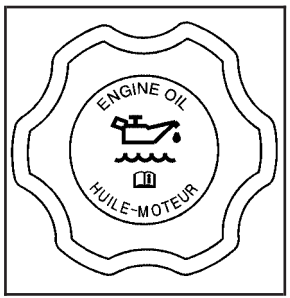

See *Engine Compartment Overview on page 46* for the location of the engine oil fill cap.

Be sure to add enough oil to put the level somewhere in the proper operating range. Push the dipstick all the way back in when you are through.

What Kind of Engine Oil to Use

Look for these two things:

- CJ-4 or CI-4

  Oils designated as API CJ-4 or CI-4 are recommended for your vehicle. The CJ-4 or CI-4 designations may appear either alone, together, or in combination with other API designations, such as API CJ-4/SM.

  These letters show American Petroleum Institute (API) levels of quality.

Notice: **Use only engine oils that have one of these designations, CJ-4 or CI-4, for the diesel engine. Failure to use the recommended oils can result in engine damage not covered by your warranty.**

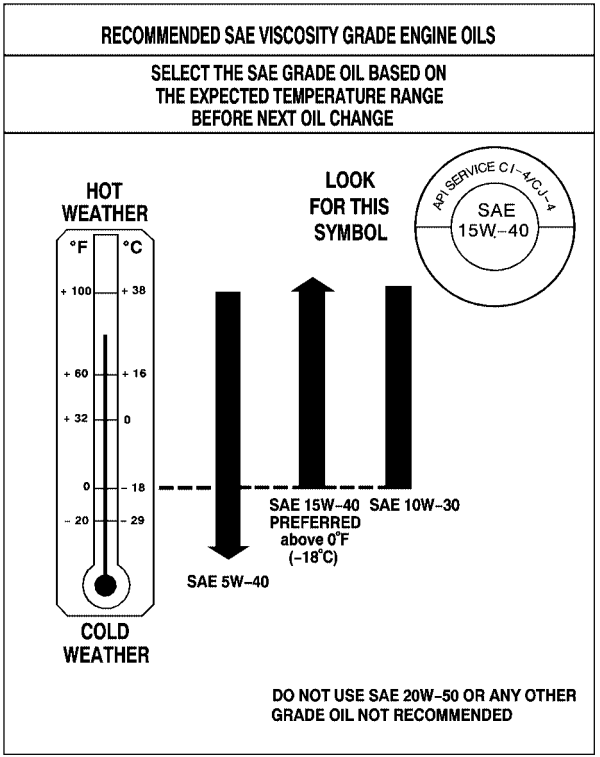

- SAE 15W-40

  As shown in the viscosity chart, SAE 15W-40 is best for your vehicle. However, you can use SAE 10W-30 at temperatures above 0°F (–18°C). When it is very cold, below 0°F (–18°C), you should use SAE 5W-40 to improve cold starting. 5W-40 is not recommended for use at high temperatures, above 100°F (38°C).

  These numbers on the oil container show its viscosity, or thickness. Do not use other viscosity oils such as SAE 10W-40 or SAE 20W-50.

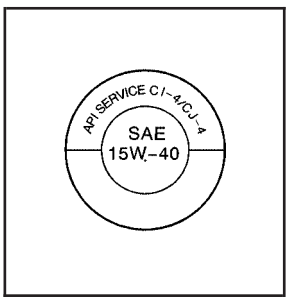

This doughnut-shaped logo (symbol) is used on most oil containers to help you select the correct oil. It means that the oil has been certified by the American Petroleum Institute.

You should look for this on the oil container, and use only those oils that display this logo.

GM Goodwrench® oil of the recommended viscosity grades meets all the requirements for your vehicle.

Engine Oil Additives

Do not add anything to the oil. The recommended oils with the API service symbol are all you will need for good performance and engine protection.

Engine Oil Life System

When to Change Engine Oil

Your vehicle has a computer system that lets you know when to change the engine oil and filter. This is based on engine timing, engine load, and engine temperature, and not on mileage. Based on driving conditions, the mileage at which an engine oil change will be indicated can vary considerably. For the oil life system to work properly, you must reset the system every time the oil is changed.

When the system has calculated that oil life has been diminished, it will indicate that an oil change is necessary. A CHANGE ENGINE OIL message in pickup models or a change engine oil light in van models will come on. Change the oil as soon as possible within the next 600 miles (1 000 km). It is possible that, if you are driving under the best conditions, the oil life system may not indicate that an oil change is necessary for over a year. However, the engine oil and filter must be changed at least once a year and at this time the system must be reset. Your dealer has GM-trained service people who will perform this work using genuine GM parts and reset the system. It is also important to check the oil regularly and keep it at the proper level.

If the system is ever reset accidentally, you must change the oil at 3,000 miles (5 000 km) since your last oil change. Remember to reset the oil life system whenever the oil is changed.

How to Reset the Engine Oil Life System

The Engine Oil Life System calculates when to change the engine oil and filter based on vehicle use. Anytime the oil is changed, reset the system so it can calculate when the next oil change is required. If a situation occurs where you change the oil prior to a CHANGE ENGINE OIL message (pickup models) or a change engine oil light (van models) being turned on, reset the system.

To reset the Engine Oil Life System, do the following:

1. Turn the ignition key to RUN with the engine off.
2. Fully press and release the accelerator pedal three times within five seconds.

   Pickup Models: If the OIL LIFE RESET message displays for 10 seconds, the system is resetting.

   Van Models: If the change engine oil light flashes for five seconds, the system is reset.
3. Turn the ignition key to LOCK.

If the message or light comes back on when you start your vehicle, the engine oil life system has not reset. Repeat the procedure. If it still does not reset, see your dealer for service.

What to Do with Used Oil

Used engine oil contains certain elements that may be unhealthy for your skin and could even cause cancer. Do not let used oil stay on your skin for very long. Clean your skin and nails with soap and water, or a good hand cleaner. Wash or properly throw away clothing or rags containing used engine oil. See the manufacturer's warning about the use and disposal of oil products.

Used oil can be a threat to the environment. If you change your own oil, be sure to drain all the oil from the filter before disposal. Never dispose of oil by putting it in the trash, pouring it on the ground, into sewers, or into streams or bodies of water. Instead, recycle it by taking it to a place that collects used oil. If you have a problem properly disposing of used oil, ask your dealer, a service station, or a local recycling center for help.

Engine Air Cleaner/Filter

Pickup Models

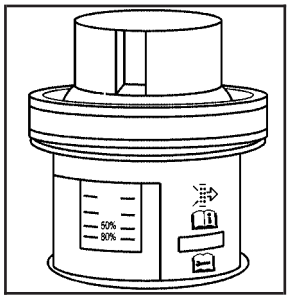

The air cleaner/filter assembly may have an air cleaner/filter restriction indicator that lets you know when the engine air cleaner/filter is dirty and needs to be serviced.

The air cleaner/filter restriction indicator is located on the air cleaner cover.

When to Inspect

Inspect the air cleaner/filter every 15,000 miles (25 000 km) and replace the filter if necessary.

How to Inspect

When the restriction indicator turns black, or is in the red/orange “change” zone, replace the filter and reset the restriction indicator.

To inspect and replace the filter and reset the restriction indicator, do the following:

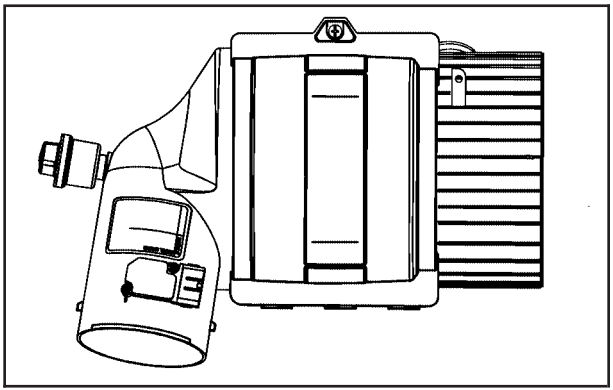

The air cleaner/filter assembly is located on the front corner of the engine compartment on the passenger’s side of the vehicle.

1. Loosen the screw on the cover of the housing and lift up the cover.
2. Remove the air cleaner/filter from the housing. Care should be taken to dislodge as little dirt as possible.

3. Clean the filter sealing surface and the housing.
4. Install the new engine air cleaner/filter.
5. Reinstall the cover and tighten the screw.
6. Reset the air cleaner/filter restriction indicator, if equipped, by pressing the top button on the indicator.

See *Scheduled Maintenance on page 89* to determine when to replace the engine air cleaner/filter.

Never use compressed air to clean the filter.

Van Models

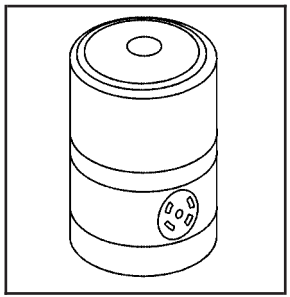

The air cleaner/filter assembly may have an air cleaner/filter restriction indicator that lets you know when the engine air cleaner/filter is dirty and needs to be serviced.

The air cleaner/filter restriction indicator is located on the air cleaner resonator.

When to Inspect

Inspect the air cleaner/filter every 15,000 miles (25 000 km) and replace the filter if necessary.

How to Inspect

When the restriction indicator is in the red/orange “change” zone, replace the filter and reset the restriction indicator.

To inspect and replace the filter and reset the restriction indicator, do the following:

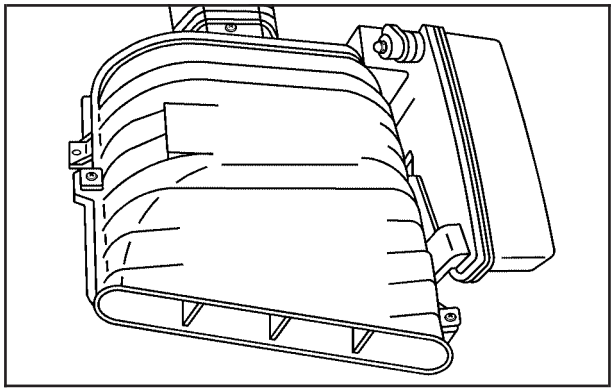

The air cleaner/filter assembly is located at the front of the engine compartment.

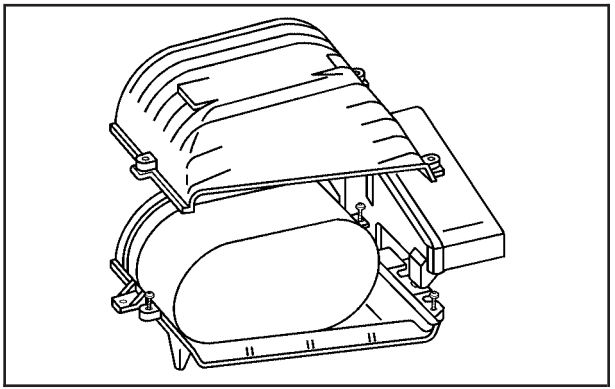

1. Loosen the screws on the cover of the housing and lift up the cover.
2. Remove the air cleaner/filter from the housing. Care should be taken to dislodge as little dirt as possible.
3. Clean the filter sealing surface and the housing.
4. Install the new engine air cleaner/filter.
5. Reinstall the cover and tighten the screws.

6. Reset the air cleaner/filter restriction indicator, if equipped, by pressing the top button on the indicator.

Never use compressed air to clean the filter.

See *Scheduled Maintenance on page 89* to determine when to replace the engine air cleaner/filter.

⚠ CAUTION:

Operating the engine with the air cleaner/filter off can cause you or others to be burned. The air cleaner not only cleans the air; it helps to stop flames if the engine backfires. If it is not there and the engine backfires, you could be burned. Do not drive with it off, and be careful working on the engine with the air cleaner/filter off.

Notice: **If the air cleaner/filter is off, a backfire can cause a damaging engine fire. And, dirt can easily get into your engine, which will damage it. Always have the air cleaner/filter in place when you are driving.**

Automatic Transmission Fluid

When to Check and Change (Pickup Models)

A good time to check your automatic transmission fluid level is when the engine oil is changed.

Change both the fluid and filter every 25,000 miles (41 500 km) if the vehicle is mainly driven under one or more of these conditions:

- In heavy city traffic where the outside temperature regularly reaches 90°F (32°C) or higher.
- In hilly or mountainous terrain.
- When doing frequent trailer towing.
- Uses such as found in taxi, police or delivery service.

If you do not use your vehicle under any of these conditions, change the fluid and filter every 50,000 miles (83 000 km).

See *Scheduled Maintenance on page 89*.

How to Check

Because this operation can be a little difficult, you may choose to have this done at the dealership service department.

If you do it yourself, be sure to follow all the instructions here, or you could get a false reading on the dipstick.

Notice: **Too much or too little fluid can damage your transmission. Too much can mean that some of the fluid could come out and fall on hot engine parts or exhaust system parts, starting a fire. Too little fluid could cause the transmission to overheat. Be sure to get an accurate reading if you check your transmission fluid.**

Wait at least 30 minutes before checking the transmission fluid level if you have been driving:

- When outside temperatures are above 90°F (32°C).
- At high speed for quite a while.
- In heavy traffic — especially in hot weather.
- While pulling a trailer.

Checking the Fluid Level

Prepare your vehicle as follows:

- Park your vehicle on a level place. Keep the engine running.
- With the parking brake applied, place the shift lever in PARK (P).
- With your foot on the brake pedal, run the engine for at least one minute and shift to DRIVE (D). Then shift to NEUTRAL (N) and then REVERSE (R) to fill the hydraulic system. Then, put the shift lever in PARK (P).
- Allow the engine to run at idle (500 – 800 rpm). Slowly release the brake pedal.

Then, without shutting off the engine, follow these steps:

Cold Check Procedure

The purpose of the cold check is to determine if the transmission has enough fluid to be operated safely until a hot check can be made. The fluid level rises as fluid temperature increases. DO NOT fill above the COLD CHECK band if the transmission fluid is below normal operating temperatures.

1. Pull out the dipstick and wipe it with a clean rag or paper towel. The transmission dipstick is located near the center of the engine compartment. See *Engine Compartment Overview on page 46* for more information on location.
2. Push it back in all the way, wait three seconds and then pull it back out again.
3. Check the fluid level reading. Repeat the check procedure to verify the reading.
4. If the fluid level is within the COLD CHECK band, the transmission may be operated until the fluid is hot enough to perform a hot check. If the fluid level is not within the COLD CHECK band, add or drain fluid as necessary to bring the level into the middle of the COLD CHECK band.
5. Perform a hot check at the first opportunity after the normal operating temperature of 160°F (71°C) to 200°F (93°C) is reached.
6. If the fluid level is in the acceptable range, push the dipstick back in all the way.

Hot Check Procedure

The fluid must be hot to ensure an accurate check. The fluid level rises as temperature increases.

1. Operate the transmission in DRIVE (D) until the normal operating temperature of 160°F (71°C) to 200°F (93°C) is reached.
2. Pull out the dipstick and wipe it with a clean rag or paper towel.
3. Push it back in all the way, wait three seconds and then pull it back out again. Repeat the check procedure to verify the reading.
4. Safe operating level is within the HOT RUN band on the dipstick. The width of the HOT RUN band represents approximately 1.06 quart (1.0 liter) of fluid at normal operating temperature.
5. If the fluid level is not within the HOT RUN band, add or drain fluid as necessary to bring the fluid level to within the HOT RUN band.
6. If the fluid level is in the acceptable range, push the dipstick back in all the way.

Consistency of Readings

Always check the fluid level at least twice using the procedures described previously. Consistency (repeatable readings) is important to maintaining proper fluid level. If inconsistent readings persist, check the transmission breather to be sure it is clean and unclogged. If readings are still inconsistent, contact your dealer.

How to Add Fluid

Refer to the Maintenance Schedule to determine what kind of transmission fluid to use. See *Recommended Fluids and Lubricants on page 100*.

Add fluid only after checking the transmission fluid while it is hot. A cold check is used only as a reference. If the fluid level is low, add only enough of the proper fluid to bring the level up to the HOT area for a hot check. It doesn't take much fluid, generally less than one pint (0.5 L). *Don't overfill.*

Notice: **Use of the incorrect automatic transmission fluid may damage your vehicle, and the damages may not be covered by your warranty. Always use the automatic transmission fluid listed in *Recommended Fluids and Lubricants on page 100*.**

- After adding fluid, recheck the fluid level as described under “How to Check.”
- When the correct fluid level is obtained, push the dipstick back in all the way.

When to Check and Change (Van Models)

A good time to check your automatic transmission fluid level is when the engine oil is changed.

Change the fluid and filter at the intervals listed in “Additional Required Services”. See *Additional Required Services on page 92*.

And be sure to use the transmission fluid listed in “Recommended Fluids and Lubricants”. See *Recommended Fluids and Lubricants on page 100* for more information.

How to Check

Because this operation can be a little difficult, you may choose to have this done at the dealership service department.

If you do it yourself, be sure to follow all the instructions here, or you could get a false reading on the dipstick.

Notice: **Too much or too little fluid can damage your transmission. Too much can mean that some of the fluid could come out and fall on hot engine parts or exhaust system parts, starting a fire. Too little fluid could cause the transmission to overheat. Be sure to get an accurate reading if you check your transmission fluid.**

Wait at least 30 minutes before checking the transmission fluid level if you have been driving:

- When outside temperatures are above 90°F (32° C).
- At high speed for quite a while.
- In heavy traffic — especially in hot weather.
- While pulling a trailer.

To get the right reading, the fluid should be at normal operating temperature, which is 180°F to 200°F (82°C to 93°C). Get the vehicle warmed up by driving about 15 miles (24 km) when outside temperatures are above 50°F (10°C). If it is colder than 50°F (10°C), drive the vehicle until the engine temperature gage moves and then remains steady for 10 minutes.

A cold check can be made after the vehicle has been sitting for eight hours or more with the engine off, but this is used only as a reference. Let the engine run at idle for five minutes if outside temperatures are 50°F (10°C) or more. If it is colder than 50°F (10 C), you may have to idle the engine longer. Should the fluid level be low during this cold check, you must check the fluid hot before adding fluid. Checking the fluid hot will give you a more accurate reading of the fluid level.

Checking the Fluid Level

Prepare your vehicle as follows:

- Park your vehicle on a level place. Keep the engine running.
- With the parking brake applied, place the shift lever in PARK (P).
- With your foot on the brake pedal, move the shift lever through each gear range, pausing for about three seconds in each range. Then, position the shift lever in PARK (P).
- Let the engine run at idle for three minutes or more.

Then, without shutting off the engine, follow these steps:

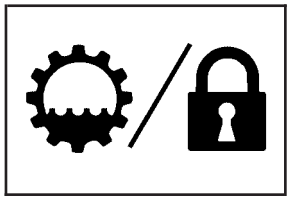

The transmission dipstick is located near the center of the engine compartment and will be labeled with the graphic shown. See *Engine Compartment Overview on page 46* for more information on location.

1. Flip the handle up and then pull out the dipstick and wipe it with a clean rag or paper towel.
2. Push it back in all the way, wait three seconds and then pull it back out again.

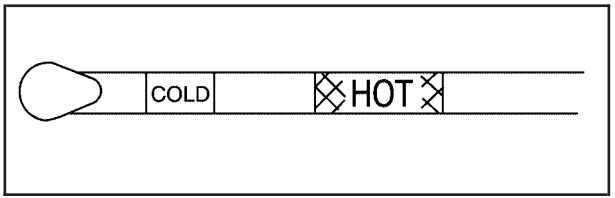

Check both sides of the dipstick, and read the lower level. The fluid level must be in the COLD area for a cold check or in the HOT or cross-hatched area for a hot check. Be sure to keep the dipstick pointed down to get an accurate reading.

3. If the fluid level is in the acceptable range, push the dipstick in all the way, then flip the handle down to lock the dipstick in place.

How to Add Fluid

Refer to the Maintenance Schedule to determine what kind of transmission fluid to use. See *Recommended Fluids and Lubricants on page 100*.

Using a funnel, add fluid down the transmission dipstick tube only after checking the transmission fluid while it is hot. A cold check is used only as a reference. If the fluid level is low, add only enough of the proper fluid to bring the level up to the HOT area for a hot check. It does not take much fluid, generally less than one pint (0.5L). Do not overfill.

Notice: **Use of the incorrect automatic transmission fluid may damage your vehicle, and the damages may not be covered by your warranty. Always use the automatic transmission fluid listed in *Recommended Fluids and Lubricants on page 100*.**

- After adding fluid, recheck the fluid level as described under “How to Check” earlier in this section.
- When the correct fluid level is obtained, push the dipstick back in all the way. Then flip the handle down to lock the dipstick in place.

Engine Coolant

Pickup Models

The cooling system in your vehicle is filled with DEX-COOL® engine coolant. This coolant is designed to remain in your vehicle for 5 years or 150,000 miles (240 000 km), whichever occurs first, if you add only DEX-COOL® extended life coolant.

The following explains your cooling system and how to add coolant when it is low. If you have a problem with engine overheating, see *Engine Overheating on page 71*.

A 50/50 mixture of clean, drinkable water and DEX-COOL® coolant will:

- Give freezing protection down to –34°F (–37°C)
- Give boiling protection up to 265°F (129°C)
- Protect against rust and corrosion
- Help keep the proper engine temperature
- Let the warning lights and gages work as they should

Notice: **Using coolant other than DEX-COOL® may cause premature engine, heater core, or radiator corrosion. In addition, the engine coolant may require changing sooner, at the first maintenance service after each 30,000 miles (50 000 km) or 24 months, whichever occurs first. Any repairs would not be covered by your warranty. Always use DEX-COOL® (silicate-free) coolant in your vehicle.**

What to Use

Use a mixture of one-half *clean, drinkable water* and one-half DEX-COOL® coolant which won't damage aluminum parts. If you use this coolant mixture, you don't need to add anything else.

⚠ CAUTION:

Adding only plain water to your cooling system can be dangerous. Plain water, or some other liquid such as alcohol, can boil before the proper coolant mixture will. Your vehicle's coolant warning system is set for the proper coolant mixture. With plain water or the wrong mixture, your engine could get too hot but you would not get the overheat warning. Your engine could catch fire and you or others could be burned. Use a 50/50 mixture of clean, drinkable water and DEX-COOL® coolant.

Notice: **If you use an improper coolant mixture, your engine could overheat and be badly damaged. The repair cost would not be covered by your warranty. Too much water in the mixture can freeze and crack the engine, radiator, heater core, and other parts.**

If you have to add coolant more than four times a year, have your dealer check your cooling system.

Notice: **If you use extra inhibitors and/or additives in your vehicle's cooling system, you could damage your vehicle. Use only the proper mixture of the engine coolant listed in this manual for the cooling system. See *Recommended Fluids and Lubricants on page 100* for more information.**

Checking Coolant

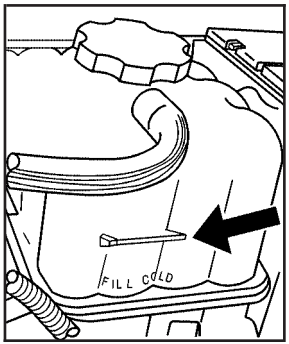

The coolant surge tank is located in the engine compartment on the passenger's side of the vehicle. See *Engine Compartment Overview on page 46* for more information on its location.

⚠ CAUTION:

Turning the surge tank pressure cap when the engine and radiator are hot can allow steam and scalding liquids to blow out and burn you badly. Never turn the surge tank pressure cap — even a little — when the engine and radiator are hot.

The vehicle must be on a level surface. When your engine is cold, the coolant level should be at the FULL COLD mark.

Adding Coolant

If you need more coolant, add the proper DEX-COOL® coolant mixture *at the surge tank*, but only when the engine is cool. If the surge tank is empty, see *Engine Overheating on page 71*.

⚠ CAUTION:

You can be burned if you spill coolant on hot engine parts. Coolant contains ethylene glycol, and it will burn if the engine parts are hot enough. Do not spill coolant on a hot engine.

When replacing the pressure cap, make sure it is hand- tight.

Van Models

The cooling system in your vehicle is filled with DEX-COOL® engine coolant. This coolant is designed to remain in your vehicle for 5 years or 150,000 miles (240 000 km), whichever occurs first, if you add only DEX-COOL® extended life coolant.

The following explains your cooling system and how to add coolant when it is low. If you have a problem with engine overheating, see *Engine Overheating on page 71*.

A 50/50 mixture of clean, drinkable water and DEX-COOL® coolant will:

- Give freezing protection down to –34°F (–37°C)
- Give boiling protection up to 265°F (129°C)
- Protect against rust and corrosion
- Help keep the proper engine temperature
- Let the warning lights and gages work as they should

Notice: **Using coolant other than DEX-COOL® may cause premature engine, heater core, radiator and fuel operated heater (FOH) corrosion. In addition, the engine coolant may require changing sooner, at 30,000 miles (50 000 km) or 24 months, whichever occurs first. Any repairs would not be covered by your warranty. Always use DEX-COOL® (silicate-free) coolant in your vehicle.**

What to Use

Use a mixture of one-half *clean, drinkable water* and one-half DEX-COOL® coolant which won't damage aluminum parts. If you use this coolant mixture, you don't need to add anything else.

⚠ CAUTION:

Adding only plain water to your cooling system can be dangerous. Plain water, or some other liquid such as alcohol, can boil before the proper coolant mixture will. Your vehicle's coolant warning system is set for the proper coolant mixture. With plain water or the wrong mixture, your engine could get too hot but you would not get the overheat warning. Your engine could catch fire and you or others could be burned. Use a 50/50 mixture of clean, drinkable water and DEX-COOL® coolant.

Notice: **If you use an improper coolant mixture, your engine could overheat and be badly damaged. The repair cost would not be covered by your warranty. Too much water in the mixture can freeze and crack the engine, radiator, heater core, and other parts.**

If you have to add coolant more than four times a year, have your dealer check your cooling system.

Notice: **If you use extra inhibitors and/or additives in your vehicle's cooling system, you could damage your vehicle. Use only the proper mixture of the engine coolant listed in this manual for the cooling system. See *Recommended Fluids and Lubricants on page 100* for more information.**

Checking Coolant

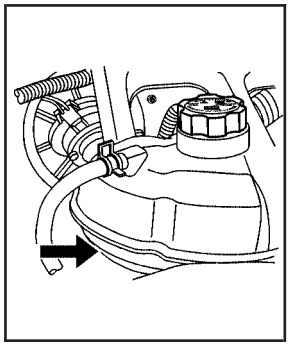

The surge tank is located near the center of the engine compartment. See *Engine Compartment Overview on page 46* for more information on its location.

⚠ CAUTION:

Turning the surge tank pressure cap when the engine and radiator are hot can allow steam and scalding liquids to blow out and burn you badly. Never turn the surge tank pressure cap — even a little — when the engine and radiator are hot.

The vehicle must be on a level surface. When your engine is cold, the coolant level should be at the COLD FILL mark.

Adding Coolant

If you need more coolant, add the proper DEX-COOL® coolant mixture *at the surge tank*, but be careful not to spill it.

⚠ CAUTION:

You can be burned if you spill coolant on hot components in the engine compartment. Coolant contains ethylene glycol, and it will burn if the engine parts are hot enough. Do not spill coolant on a hot engine or components in the engine compartment.

When replacing the pressure cap, make sure it is hand-tight.

Coolant Surge Tank Pressure Cap

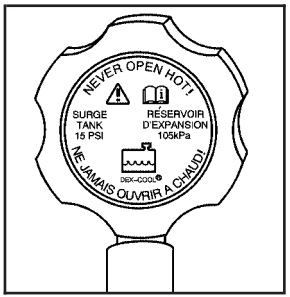

The surge tank pressure cap must be tightly installed.

Notice: **If the pressure cap is not tightly installed, coolant loss and possible engine damage may occur. Be sure the cap is properly and tightly secured.**

Engine Overheating

You will find an engine coolant temperature gage on the instrument panel cluster. For pickup models, the ENGINE OVERHEATED message may appear in the Driver Information Center (DIC). See your owner's manual for more information.

If Steam Is Coming From Your Engine

⚠ CAUTION:

Steam from an overheated engine can burn you badly, even if you just open the hood. Stay away from the engine if you see or hear steam coming from it. Just turn it off and get everyone away from the vehicle until it cools down. Wait until there is no sign of steam or coolant before you open the hood.

If you keep driving when your engine is overheated, the liquids in it can catch fire. You or others could be badly burned. Stop your engine if it overheats, and get out of the vehicle until the engine is cool.

Notice: **If your engine catches fire because you keep driving with no coolant, your vehicle can be badly damaged. The costly repairs would not be covered by your warranty.**

If No Steam Is Coming From Your Engine

An overheat warning, along with a low coolant condition, can indicate a serious problem.

If you get an engine overheat warning and don't have a low coolant condition, but see or hear no steam, the problem may not be too serious. Sometimes the engine can get a little too hot when you:

- Climb a long hill on a hot day.
- Stop after high-speed driving.
- Idle for long periods in traffic.
- Tow a trailer. See "Driving on Grades" in the owner's manual Index.

If you get the overheat warning with no sign of steam, try this for a minute or so:

1. In heavy traffic, let the engine idle in NEUTRAL (N) while stopped. If it is safe to do so, pull off the road, shift to PARK (P) or NEUTRAL (N), and let the engine idle.
2. Turn on your heater to full hot at the highest fan speed and open the window as necessary.

If you no longer have the overheat warning, you can drive. Just to be safe, drive slower for about 10 minutes. If the warning doesn't come back on, you can drive normally.

If the warning continues, pull over, stop, and park your vehicle right away.

If there's still no sign of steam and your vehicle is equipped with an engine driven cooling fan, push down the accelerator until the engine speed is about twice as fast as normal idle speed for at least three minutes while you're parked. If there is no sign of steam and your vehicle is equipped with an electric cooling fan, idle the engine for three minutes while you're parked. If you still have the warning, *turn off the engine and get everyone out of the vehicle* until it cools down.

You may decide not to lift the hood but to get service help right away.

Cooling System

Pickup Models

When you decide it's safe to lift the hood, here's what you'll see:

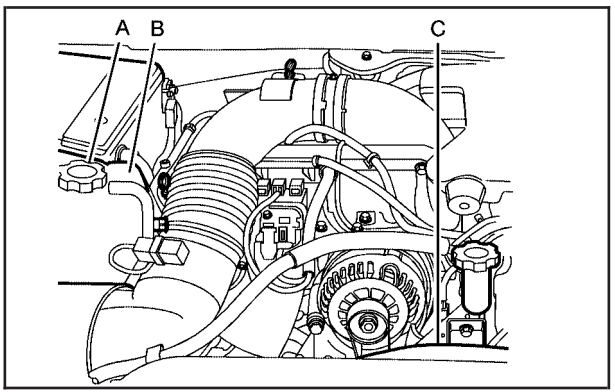

A. Coolant Surge Tank Pressure Cap
B. Coolant Surge Tank
C. Engine Fan

If the coolant inside the coolant surge tank is boiling, don't do anything else until it cools down. The vehicle should be parked on a level surface.

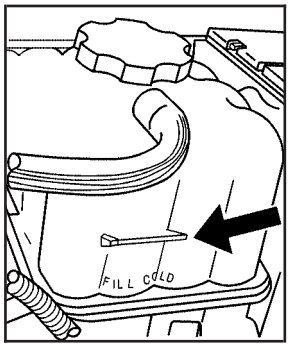

The coolant level should be at or above the FULL COLD mark. If it isn't, you may have a leak at the pressure cap or in the radiator hoses, heater hoses, radiator, water pump or somewhere else in the cooling system.

⚠ CAUTION:

Heater and radiator hoses, and other engine parts, can be very hot. Do not touch them. If you do, you can be burned.

Do not run the engine if there is a leak. If you run the engine, it could lose all coolant. That could cause an engine fire, and you could be burned. Get any leak fixed before you drive the vehicle.

If there seems to be no leak, start the engine again. If your vehicle is equipped with an engine driven cooling fan, the engine cooling fan speed should increase when idle speed is doubled by pushing the accelerator pedal down. If it doesn't, your vehicle needs service. Turn off the engine.

Notice: **Engine damage from running your engine without coolant is not covered by your warranty.**

Notice: **Using coolant other than DEX-COOL® may cause premature engine, heater core, or radiator corrosion. In addition, the engine coolant could require changing sooner, at 30,000 miles (50 000 km) or 24 months, whichever occurs first. Any repairs would not be covered by your warranty. Always use DEX-COOL® (silicate-free) coolant in your vehicle.**

How to Add Coolant to the Coolant Surge Tank

Notice: **The diesel engine has a specific coolant fill procedure. Failure to follow this procedure could cause your engine to overheat and be severely damaged.**

If you haven't found a problem yet, check to see if coolant is visible in the surge tank. If coolant is visible but the coolant level isn't at or above the FULL COLD mark, add a 50/50 mixture of *clean, drinkable water* and DEX-COOL® coolant at the coolant surge tank, but be sure the cooling system, including the coolant surge tank pressure cap, is cool before you do it. See *Engine Coolant on page 65* for more information.

If no coolant is visible in the surge tank, add coolant as follows:

⚠ CAUTION:

Steam and scalding liquids from a hot cooling system can blow out and burn you badly. They are under pressure, and if you turn the coolant surge tank pressure cap — even a little — they can come out at high speed. Never turn the cap when the cooling system, including the coolant surge tank pressure cap, is hot. Wait for the cooling system and coolant surge tank pressure cap to cool if you ever have to turn the pressure cap.

⚠ CAUTION:

Adding only plain water to your cooling system can be dangerous. Plain water, or some other liquid such as alcohol, can boil before the proper coolant mixture will. Your vehicle's coolant warning system is set for the proper coolant mixture. With plain water or the wrong mixture, your engine could get too hot but you would not get the overheat warning. Your engine could catch fire and you or others could be burned. Use a 50/50 mixture of clean, drinkable water and DEX-COOL® coolant.

Notice: **In cold weather, water can freeze and crack the engine, radiator, heater core and other parts. Use the recommended coolant and the proper coolant mixture.**

⚠ CAUTION:

You can be burned if you spill coolant on hot engine parts. Coolant contains ethylene glycol and it will burn if the engine parts are hot enough. Do not spill coolant on a hot engine.

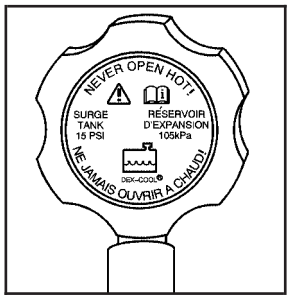

Park the vehicle on a level surface. You can remove the coolant surge tank pressure cap when the cooling system, including the coolant surge tank pressure cap and upper radiator hose, is no longer hot.

1. Turn the pressure cap slowly counterclockwise (left) until it first stops. Don't press down while turning the pressure cap. If you hear a hiss, wait for that to stop. A hiss means there is still some pressure left.

2. Then keep turning the cap, but now push down as you turn it. Remove the pressure cap.

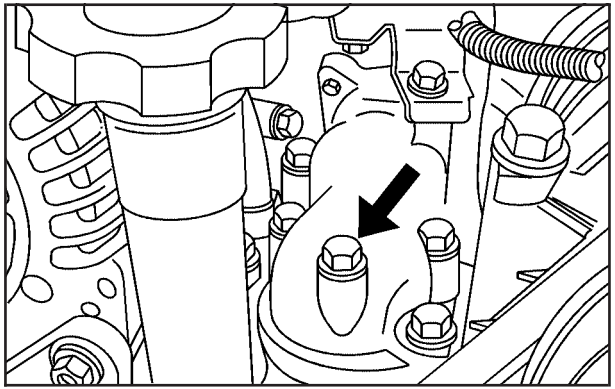

3. After the engine cools, open the air bleed valve on the thermostat housing.

   Fill with the proper mixture. Add coolant until you see a steady stream of coolant coming from the bleed valve.

4. Close the bleed valve.
5. Rinse or wipe the spilled coolant from the engine and compartment.

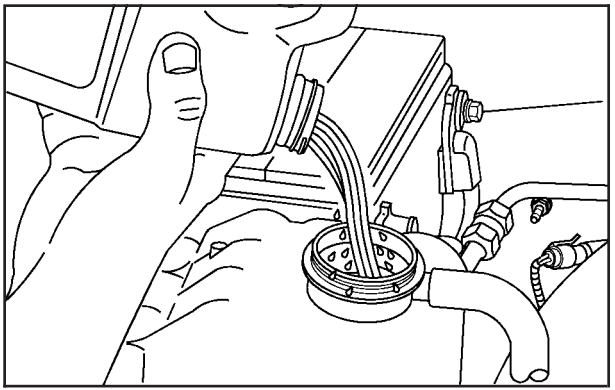

6. Then fill the coolant surge tank with the proper mixture, to slightly above the fill mark.

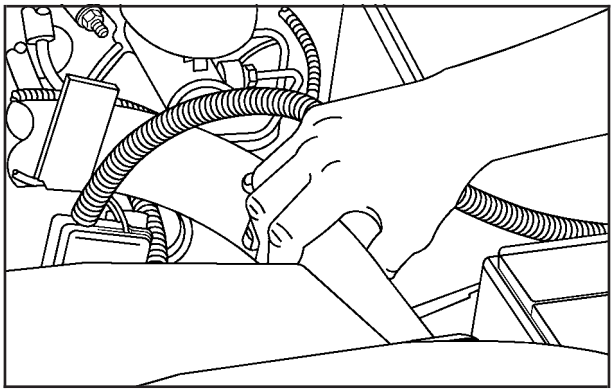

7. With the coolant surge tank pressure cap off, start the engine and let it run until you can feel the upper radiator hose getting hot. Watch out for the engine cooling fan.

   By this time, the coolant level inside the coolant surge tank may be lower. If the level is lower, add more of the proper mixture to the coolant surge tank until the level reaches the FULL COLD mark.

8. Then replace the pressure cap.

Van Models

When you decide it is safe to lift the hood, here is what you will see:

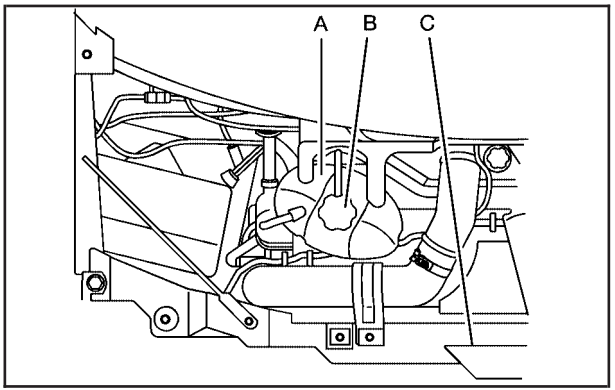

A. Coolant Surge Tank
B. Coolant Surge Tank Pressure Cap
C. Engine Cooling Fan

If the coolant inside the coolant surge tank is boiling, do not do anything else until it cools down.

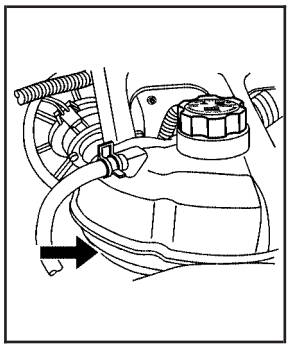

When the engine is cold, the coolant level should be at or above the COLD FILL mark.

If it is not, you may have a leak at the pressure cap or in the radiator hoses, heater hoses, radiator, water pump, fuel operated heater (FOH) or somewhere else in the cooling system.

⚠ CAUTION:

Heater and radiator hoses, the fuel operated heater (FOH) and other engine parts, can be very hot. Do not touch them. If you do, you can be burned.

Do not run the engine if there is a leak. If you run the engine, it could lose all coolant. That could cause an engine fire, and you could be burned. Get any leak fixed before you drive the vehicle.

If there seems to be no leak, start the engine again. See if the engine cooling fan speed increases when idle speed is doubled by pushing the accelerator pedal down. If it does not, your vehicle needs service. Turn off the engine.

Notice: **Engine damage from running your engine without coolant is not covered by your warranty.**

Notice: **Using coolant other than DEX-COOL® may cause premature engine, heater core, radiator and fuel operated heater (FOH) corrosion. In addition, the engine coolant may require changing sooner, at 30,000 miles (50 000 km) or 24 months, whichever occurs first. Any repairs would not be covered by your warranty. Always use DEX-COOL® (silicate-free) coolant in your vehicle.**

How to Add Coolant to the Coolant Surge Tank

Notice: **The diesel engine has a specific coolant fill procedure. Failure to follow this procedure could cause your engine to overheat and be severely damaged.**

If you have not found a problem yet, but the coolant level is not at the COLD FILL mark, add a 50/50 mixture of clean, drinkable water and DEX-COOL® engine coolant at the coolant surge tank. See *Engine Coolant on page 65* for more information.

If no coolant is visible in the surge tank, add coolant as follows:

⚠ CAUTION:

Steam and scalding liquids from a hot cooling system can blow out and burn you badly. They are under pressure, and if you turn the coolant surge tank pressure cap — even a little — they can come out at high speed. Never turn the cap when the cooling system, including the coolant surge tank pressure cap, is hot. Wait for the cooling system and coolant surge tank pressure cap to cool if you ever have to turn the pressure cap.

⚠ CAUTION:

Adding only plain water to your cooling system can be dangerous. Plain water, or some other liquid such as alcohol, can boil before the proper coolant mixture will. Your vehicle's coolant warning system is set for the proper coolant mixture. With plain water or the wrong mixture, your engine could get too hot but you would not get the overheat warning. Your engine could catch fire and you or others could be burned. Use a 50/50 mixture of clean, drinkable water and DEX-COOL® coolant.

Notice: **In cold weather, water can freeze and crack the engine, radiator, fuel operated heater (FOH), heater core and other parts. Use the recommended coolant and the proper coolant mixture.**

⚠ CAUTION:

You can be burned if you spill coolant on hot components in the engine compartment or on the fuel operated heater (FOH). Coolant contains ethylene glycol, and it will burn if the engine parts are hot enough. Do not spill coolant on a hot engine or components in the engine compartment.

When the coolant in the coolant surge tank is at the COLD FILL mark, start your vehicle.

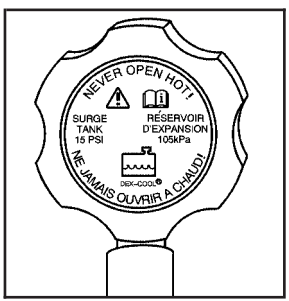

1. You can remove the coolant surge tank pressure cap when the cooling system, including the coolant surge tank pressure cap and upper radiator hose, is no longer hot. Turn the pressure cap slowly counterclockwise about one full turn.

   If you hear a hiss, wait for that to stop. A hiss means there is still some pressure left.
2. Then keep turning the pressure cap slowly, and remove it.
3. Fill the coolant surge tank with the proper mixture, up to the FULL COLD mark. See *Engine Coolant on page 65*
4. With the coolant surge tank pressure cap off, start the engine and let it run until you can feel the upper radiator hose getting hot. Watch out for the engine cooling fan. By this time, the coolant level inside the coolant surge tank may be lower. If the level is lower, add more of the proper mixture to the coolant surge tank until the level reaches the FULL COLD mark.
5. Then replace the pressure cap. Be sure the pressure cap is hand-tight and fully seated.

Capacities and Specifications

Application	Capacities	
	English	Metric
Cooling System (Pickup Models)	25.4 quarts	24.0 L
Cooling System (Van Models) Front Heat or AC Only Front Heat or AC Plus Fuel Operated Heater (FOH) Front and Rear Heat or AC Only Front and Rear Heat or AC Plus Fuel Operated Heater (FOH)	 21.0 quarts 22.0 quarts 22.5 quarts 23.5 quarts	 20.0 L 20.5 L 21.5 L 22.5 L
Engine Oil With Filter	10.0 quarts	9.5 L
All quantities are approximate. When adding, be sure to fill to the appropriate level, as recommended in this manual. Recheck fluid level after filling. See *Recommended Fluids and Lubricants on page 100* for more information.		

Engine Specifications

Engine	VIN Code	Type
6.6L V8 Turbo Diesel (LLY Engine)	2	V8
6.6L V8 Turbo Diesel (LBZ Engine)	D	V8

Section 6 Maintenance Schedule

Maintenance Schedule 86
Introduction 86
Maintenance Requirements 86
Your Vehicle and the Environment 86
Using the Maintenance Schedule 87
Scheduled Maintenance 89
Additional Required Services 92
Maintenance Footnotes 93
Owner Checks and Services 96
At Each Fuel Fill 96
At Least Once a Month 97
At Least Once a Year 98
Recommended Fluids and Lubricants 100
Normal Maintenance Replacement Parts 103
Engine Drive Belt Routing 104
Maintenance Record 105

Maintenance Schedule

Introduction

Important: Keep engine oil at the proper level and change as recommended.



Have you purchased the GM Protection Plan? The Plan supplements your new vehicle warranties. See your Warranty and Owner Assistance booklet or your dealer for details.

Maintenance Requirements

Notice: **Maintenance intervals, checks, inspections, replacement parts, and recommended fluids and lubricants as prescribed in this manual are necessary to keep your vehicle in good working condition. Any damage caused by failure to follow scheduled maintenance may not be covered by warranty.**

Your Vehicle and the Environment

Proper vehicle maintenance not only helps to keep your vehicle in good working condition, but also helps the environment. All recommended maintenance is important. Improper vehicle maintenance can even affect the quality of the air we breathe. Improper fluid levels or the wrong tire inflation can increase the level of emissions from your vehicle. To help protect our environment, and to keep your vehicle in good condition, be sure to maintain your vehicle properly.

Using the Maintenance Schedule

We at General Motors want to help you keep your vehicle in good working condition. But we do not know exactly how you will drive it. You may drive very short distances only a few times a week. Or you may drive long distances all the time in very hot, dusty weather. You may use your vehicle in making deliveries. Or you may drive it to work, to do errands, or in many other ways.

Because of all the different ways people use their vehicles, maintenance needs vary. You may need more frequent checks and replacements. So please read the following and note how you drive. If you have any questions on how to keep your vehicle in good condition, see your GM Goodwrench® dealer.

This schedule is for vehicles that:

- carry passengers and cargo within recommended limits. You will find these limits on the Tire and Loading Information label. See “Loading Your Vehicle” in your owner manual.
- are driven on reasonable road surfaces within legal driving limits.
- are driven off-road in the recommended manner, pickup models only. See “Off-Road Driving” in your owner manual.
- use the recommended fuel. See *Diesel Engine Fuel on page 28*.

The services in *Scheduled Maintenance on page 89* should be performed when indicated. See *Additional Required Services on page 92* and *Maintenance Footnotes on page 93* for further information.

⚠ CAUTION:

Performing maintenance work on a vehicle can be dangerous. In trying to do some jobs, you can be seriously injured. Do your own maintenance work only if you have the required know-how and the proper tools and equipment for the job. If you have any doubt, see your GM Goodwrench® dealer to have a qualified technician do the work. See "Doing Your Own Service Work" in your owner manual.

Some maintenance services can be complex. So, unless you are technically qualified and have the necessary equipment, you should have your GM Goodwrench® dealer do these jobs.

When you go to your GM Goodwrench® dealer for your service needs, you will know that GM-trained and supported service technicians will perform the work using genuine GM parts.

If you want to purchase service information, see "Service Publications Ordering Information" in your owner manual.

Owner Checks and Services on page 96 tells you what should be checked, when to check it, and what you can easily do to help keep your vehicle in good condition.

The proper replacement parts, fluids, and lubricants to use are listed in *Recommended Fluids and Lubricants on page 100* and *Normal Maintenance Replacement Parts on page 103*. When your vehicle is serviced, make sure these are used. All parts should be replaced and all necessary repairs done before you or anyone else drives the vehicle. We recommend the use of genuine GM parts.

Scheduled Maintenance

When the CHANGE ENGINE OIL message (pickup models) or the change engine oil light (van models) comes on, it means that service is required for your vehicle. Have your vehicle serviced as soon as possible within the next 600 miles (1 000 km). It is possible that, if you are driving under the best conditions, the engine oil life system may not indicate that vehicle service is necessary for over a year. However, your engine oil and filter must be changed at least once a year and at this time the system must be reset. Your GM Goodwrench® dealer has GM-trained service technicians who will perform this work using genuine GM parts and reset the system.

If the engine oil life system is ever reset accidentally, you must service your vehicle within 3,000 miles (5 000 km) since your last service. Remember to reset the oil life system whenever the oil is changed. See *Engine Oil Life System on page 52* for information on the Engine Oil Life System and resetting the system.

When the message or light appears, certain services, checks, and inspections are required. Required services are described in the following for “Maintenance I” and “Maintenance II.” Generally, it is recommended that your first service be Maintenance I, your second service be Maintenance II, and that you alternate Maintenance I and Maintenance II thereafter. However, in some cases, Maintenance II may be required more often.

Maintenance I — Use Maintenance I if the message or light comes on within 10 months since the vehicle was purchased or Maintenance II was performed.

Maintenance II — Use Maintenance II if the previous service performed was Maintenance I. Always use Maintenance II whenever the message or light comes on 10 months or more since the last service or if the message or light has not come on at all for one year.

Scheduled Maintenance

Service	Maintenance I	Maintenance II
Change engine oil and filter. See *Engine Oil on page 49*. Reset oil life system. See *Engine Oil Life System on page 52*. *An Emission Control Service.*	•	•
Allison Transmission® only: Replace external transmission filter at the first maintenance service performed on the vehicle.		
Lubricate chassis components. *See footnote #.*	•	•
Visually check for any leaks or damage. *See footnote (a).*	•	•
Inspect engine air cleaner filter or change indicator, if equipped. If necessary, replace filter. See *Engine Air Cleaner/Filter on page 54*. *See footnote (b).*		•
Rotate tires and check inflation pressures and wear. See “Tire Inspection and Rotation” in your owner manual. See “Tire Wear Inspection” in *At Least Once a Month on page 97*.	•	•
Inspect brake system. *See footnote (c).*	•	•
Check engine coolant and windshield washer fluid levels and add fluid as needed.	•	•

Scheduled Maintenance (cont'd)

Service	Maintenance I	Maintenance II
Perform any needed additional services. See "Additional Required Services" in this section.	•	•
Inspect suspension and steering components. *See footnote (d).*		•
Inspect engine cooling system. *See footnote (e).*		•
Inspect wiper blades. *See footnote (f).*		•
Inspect restraint system components. *See footnote (g).*		•
Lubricate body components. *See footnote (h).*		•
Check transmission fluid level and add fluid as needed.		•
Van models: Replace both fuel filters. *An Emission Control Service. See footnotes † and (i).*		•
Pickup models: Fuel filter service. *An Emission Control Service. See footnotes † and (j).*		•
Inspect shields and underhood insulation, vans with GVWR above 10,000 lbs (4 536 kg) and all pickups. *See footnote (k).*		•
Check air intake system. *See footnote (l).*		•
Van models: Inspect throttle system. *See footnote (m).*		•

Additional Required Services

The following services should be performed at the first maintenance service (I or II) after the indicated miles (kilometers) shown for each item.

Additional Required Services

Service and Miles (Kilometers)	25,000 (40 000)	50,000 (80 000)	75,000 (120 000)	100,000 (160 000)	125,000 (200 000)	150,000 (240 000)
Inspect fuel system for damage or leaks.	•	•	•	•	•	•
Inspect exhaust system for loose or damaged components.	•	•	•	•	•	•
Pickup models: Change automatic transmission fluid and external transmission filter (severe service). *See footnote (p).*	•	•	•	•	•	•
Pickup models: Change automatic transmission fluid and external transmission filter (normal service).		•		•		•
Van models: Change automatic transmission fluid and filter (severe service). *See footnote (p).*		•		•		•
Van models: Change automatic transmission fluid and filter (normal service).				•		

Additional Required Services (cont'd)

Service and Miles (Kilometers)	25,000 (40 000)	50,000 (80 000)	75,000 (120 000)	100,000 (160 000)	125,000 (200 000)	150,000 (240 000)
Pickup models: Four-wheel drive with automatic transfer case only: Change transfer case fluid. *See footnote (q).*		•		•		•
Engine cooling system service (or every five years, whichever occurs first). *An Emission Control Service. See footnote (r).*						•
Inspect engine accessory drive belt. *An Emission Control Service. See footnote (s).*						•

Maintenance Footnotes

† The U.S. Environmental Protection Agency or the California Air Resources Board has determined that the failure to perform this maintenance item will not nullify the emission warranty or limit recall liability prior to the completion of the vehicle's useful life. We, however, urge that all recommended maintenance services be performed at the indicated intervals and the maintenance be recorded.

 # Lubricate the front suspension, steering linkage, transmission shift linkage (pickup models), rear driveline center splines (van models), and parking brake cable guides. Pickup models only: Control arm ball joints require lubrication but should not be lubricated unless their temperature is 10°F (-12°C) or higher, or they could be damaged. Vehicles used under severe commercial operating conditions require lubrication on a regular basis every 3,000 miles (5 000 km).

(a) *A fluid loss in any vehicle system could indicate a problem. Have the system inspected and repaired and the fluid level checked. Add fluid if needed.*

(b) *If you drive regularly under dusty conditions, inspect the filter or change indicator, if equipped, at each engine oil change.*

(c) *Visually inspect brake lines and hoses for proper hook-up, binding, leaks, cracks, chafing, etc. Inspect disc brake pads for wear and rotors for surface condition. Inspect drum brake linings/shoes for wear or cracks. Inspect other brake parts, including drums, wheel cylinders, calipers, parking brake, etc.*

(d) *Visually inspect front and rear suspension and steering system for damaged, loose, or missing parts, signs of wear or lack of lubrication. Inspect power steering lines and hoses for proper hook-up, binding, leaks, cracks, chafing, etc. Pickup models: Visually check constant velocity joints, rubber boots, and axle seals for leaks.*

(e) *Visually inspect hoses and have them replaced if they are cracked, swollen, or deteriorated. Inspect all pipes, fittings, and clamps; replace with genuine GM parts as needed. To help ensure proper operation, a pressure test of the cooling system and pressure cap and cleaning the outside of the radiator and air conditioning condenser is recommended at least once a year.*

(f) *Visually inspect wiper blades for wear or cracking. Replace wiper blades that appear worn or damaged or that streak or miss areas of the windshield.*

(g) *Make sure the safety belt reminder light and all your belts, buckles, latch plates, retractors, and anchorages are working properly. Look for any other loose or damaged safety belt system parts. If you see anything that might keep a safety belt system from doing its job, have it repaired. Have any torn or frayed safety belts replaced. Also look for any opened or broken airbag coverings, and have them repaired or replaced. The airbag system does not need regular maintenance.*

(h) *Lubricate all key lock cylinders, body door hinges, hood latch assembly, secondary latch, pivots, spring anchor, release pawl, fuel door hinge, locks, latches, and any folding or moving seat hardware. Pickup models: Lubricate tailgate hinges, tailgate linkage, tailgate handle pivot points, and latch bolt. Van models: Lubricate hood hinges and rear compartment hinges. More frequent lubrication may be required when exposed to a corrosive environment. Applying silicone grease on weatherstrips with a clean cloth will make them last longer, seal better, and not stick or squeak.*

(i) *Van Models: If the two chassis mounted fuel filters have not been replaced, or if the vehicle has been driven 20,000 miles (32 000 km) or more since the fuel filters were last replaced, replace both fuel filters.*

(j) *Pickup Models: This vehicle has a CHANGE FUEL FILTER message in the Driver Information Center (DIC) to tell you when to replace the fuel filter. See Driver Information Center (DIC) (Pickup Models Only) on page 21 for more information and how to reset the message after the fuel filter is replaced. If the fuel filter has not been replaced, or if the vehicle has been driven 15,000 miles (25 000 km) or more since the fuel filter was last replaced, replace the filter and reset the message.*

(k) *Inspect shields and underhood insulation for damage or looseness. Adjust or replace as required. This is a Noise Emission Control Service. Applicable to vehicles sold in the United States and recommended for vehicles sold in Canada.*

(l) *Check the air intake system installation to assure that gaskets are properly sealed and that all hose connections, fasteners, and other components are tight. Also check to be sure that the air cleaner housing is properly seated and the cover fits tightly. Tighten connections and fasteners or replace damaged parts as necessary. This is a Noise Emission Control Service. Applicable to vehicles sold in the United States and recommended for vehicles sold in Canada.*

(m) *Check system for interference or binding and for damaged or missing parts. Replace parts as needed. Replace any components that have high effort or excessive wear. Do not lubricate accelerator or cruise control cables.*

(p) *Change automatic transmission fluid and external transmission filter if the vehicle is mainly driven under one or more of these conditions:*

- *In heavy city traffic where the outside temperature regularly reaches 90°F (32°C) or higher.*
- *In hilly or mountainous terrain.*
- *When doing frequent trailer towing.*
- *Uses such as found in taxi, police, or delivery service.*

(q) *Check vent hose at transfer case for kinks and proper installation.*

(r) *Drain, flush, and refill cooling system. This service can be complex; you should have your dealer perform this service. See Engine Coolant on page 65 for what to use. Inspect hoses. Clean radiator, condenser, van model fuel operated heater (if equipped), pressure cap, and filler neck. Pressure test the cooling system and pressure cap. For van models, see Fuel Operated Heater (FOH) (Van Models Only) on page 10*.

(s) *Visually inspect belt for fraying, excessive cracks, or obvious damage. Replace belt if necessary.*

Owner Checks and Services

These owner checks and services should be performed at the intervals specified to help ensure the safety, dependability, and emission control performance of your vehicle. Your GM Goodwrench® dealer can assist you with these checks and services.

Be sure any necessary repairs are completed at once. Whenever any fluids or lubricants are added to your vehicle, make sure they are the proper ones, as shown in *Recommended Fluids and Lubricants on page 100*.

At Each Fuel Fill

It is important to perform these underhood checks at each fuel fill.

Engine Oil Level Check

Check the engine oil level and add the proper oil if necessary. See *Engine Oil on page 49* for further details.

Notice: **It is important to check your oil regularly and keep it at the proper level. Failure to keep your engine oil at the proper level can cause damage to your engine not covered by your warranty.**

Engine Coolant Level Check

Check the engine coolant level and add DEX-COOL® coolant mixture if necessary. See *Engine Coolant on page 65* for further details.

Windshield Washer Fluid Level Check

Check the windshield washer fluid level in the windshield washer fluid reservoir and add the proper fluid if necessary.

At Least Once a Month

Tire Inflation Check

Visually inspect your vehicle's tires and make sure they are inflated to the correct pressures. Do not forget to check the spare tire. See "Inflation — Tire Pressure" in your owner manual for further details. Check to make sure the spare tire is stored securely. See "Changing a Flat Tire" in your owner manual.

Tire Wear Inspection

Tire rotation may be required for high mileage highway drivers prior to the Engine Oil Life System service notification. Check the tires for wear and, if necessary, rotate the tires. See "Tire Inspection and Rotation" in your owner manual.

At Least Once a Year

Starter Switch Check

⚠ CAUTION:

When you are doing this inspection, the vehicle could move suddenly. If the vehicle moves, you or others could be injured.

1. Before you start, be sure you have enough room around the vehicle.
2. Firmly apply both the parking brake and the regular brake. See “Parking Brake” in your owner manual.

   Do not use the accelerator pedal, and be ready to turn off the engine immediately if it starts.
3. Try to start the engine in each gear. The vehicle should start only in PARK (P) or NEUTRAL (N). If the vehicle starts in any other position, contact your GM Goodwrench® dealer for service.

Automatic Transmission Shift Lock Control System Check

⚠ CAUTION:

When you are doing this inspection, the vehicle could move suddenly. If the vehicle moves, you or others could be injured.

1. Before you start, be sure you have enough room around the vehicle. It should be parked on a level surface.
2. Firmly apply the parking brake. See “Parking Brake” in your owner manual.

   Be ready to apply the regular brake immediately if the vehicle begins to move.
3. With the engine off, turn the ignition to RUN, but do not start the engine. Without applying the regular brake, try to move the shift lever out of PARK (P) with normal effort. If the shift lever moves out of PARK (P), contact your GM Goodwrench® dealer for service.

Ignition Transmission Lock Check

While parked, and with the parking brake set, try to turn the ignition to LOCK in each shift lever position.

- The ignition should turn to LOCK only when the shift lever is in PARK (P).
- The ignition key should come out only in LOCK.

Contact your GM Goodwrench® dealer if service is required.

Parking Brake and Automatic Transmission Park (P) Mechanism Check

⚠ CAUTION:

When you are doing this check, your vehicle could begin to move. You or others could be injured and property could be damaged. Make sure there is room in front of your vehicle in case it begins to roll. Be ready to apply the regular brake at once should the vehicle begin to move.

Park on a fairly steep hill, with the vehicle facing downhill. Keeping your foot on the regular brake, set the parking brake.

- To check the parking brake's holding ability: With the engine running and transmission in NEUTRAL (N), slowly remove foot pressure from the regular brake pedal. Do this until the vehicle is held by the parking brake only.
- To check the PARK (P) mechanism's holding ability: With the engine running, shift to PARK (P). Then release the parking brake followed by the regular brake.

Contact your GM Goodwrench® dealer if service is required.

Underbody Flushing Service

At least every spring, use plain water to flush any corrosive materials from the underbody. Take care to clean thoroughly any areas where mud and other debris can collect.

Recommended Fluids and Lubricants

Fluids and lubricants identified below by name, part number, or specification may be obtained from your dealer.

Usage	Fluid/Lubricant
Engine Oil	Engine oils with the letters CJ-4 or CI-4 are best for your vehicle. The CJ-4 or CI-4 designation may appear either alone, or in combination with other API designations, such as API CJ-4/SM. These letters show American Petroleum Institute (API) levels of quality. GM Goodwrench® oil meets all the requirements for your vehicle. To determine the preferred viscosity for your vehicle's diesel engine, see *Engine Oil on page 49*.
Engine Coolant	50/50 mixture of clean, drinkable water and use only DEX-COOL® Coolant. See *Engine Coolant on page 65*.
Hydraulic Brake System	Delco® Supreme 11 Brake Fluid or equivalent DOT-3 brake fluid.
Windshield Washer	GM Optikleen® Washer Solvent.
Van Models: Parking Brake Cable Guides	Chassis Lubricant (GM Part No. U.S. 12377985, in Canada 88901242) or lubricant meeting requirements of NLGI #2, Category LB or GC-LB.
Power Steering System	GM Power Steering Fluid (GM Part No. U.S. 89021184, in Canada 89021186).
Automatic Transmission	DEXRON®-VI Automatic Transmission Fluid.
Key Lock Cylinders	Multi-Purpose Lubricant, Superlube (GM Part No. U.S. 12346241, in Canada 10953474).
Pickup Models: Floor Shift Linkage	Lubriplate Lubricant Aerosol (GM Part No. U.S. 12346293, in Canada 992723) or lubricant meeting requirements of NLGI #2 Category LB or GC-LB.

Usage	Fluid/Lubricant
Chassis Lubrication	Chassis Lubricant (GM Part No. U.S. 12377985, in Canada 88901242) or lubricant meeting requirements of NLGI #2, Category LB or GC-LB.
Van Models: Front Wheel Bearings	Wheel bearing lubricant meeting requirements of NLGI #2, Category GC or GC-LB (GM Part No. U.S. 1051344, in Canada 993037).
Van Models: Front and Rear Axle	SAE 75W-90 Synthetic Axle Lubricant (GM Part No. U.S. 12378261, in Canada 10953455) or equivalent meeting GM Specification 9986115.
Pickup Models: Front Axle	SAE 80W-90 Axle Lubricant (GM Part No. U.S. 1052271, in Canada 10950849).
Pickup Models: Rear Axle	SAE 75W-90 Synthetic Axle Lubricant (GM Part No. U.S. 12378261, in Canada 10953455) meeting GM Specification 9986115.

Usage	Fluid/Lubricant
Pickup Models: Manual Transfer Case	Manual Transmission Fluid (GM Part No. U.S. 88861800, in Canada 88861801).
Pickup Models: Automatic Transfer Case	AUTO-TRAK II Fluid (GM Part No. U.S. 12378508, in Canada 10953626).
Van Models: Transfer Case	Manual Transmission Fluid (GM Part No. U.S. 88861800, in Canada 88861801).
Van Models: One-Piece Propshaft Slip Yoke Spline, Two-Piece Propshaft Slip-in-Tube Spline	Spline Lubricant, Special Lubricant (GM Part No. U.S. 12345879, in Canada 10953511) or lubricant meeting requirements of GM 9985830.
Pickup Models: Front Axle Propshaft Spline	Spline Lubricant, Special Lubricant (GM Part No. U.S. 12345879, in Canada 10953511) or lubricant meeting requirements of GM 9985830.

Usage	Fluid/Lubricant
Hood Hinges	Multi-Purpose Lubricant, Superlube (GM Part No. U.S. 12346241, in Canada 10953474).
Pickup Models: Body Door Hinge Pins, Tailgate Hinge and Linkage, Folding Seats, and Fuel Door Hinge	Multi-Purpose Lubricant, Superlube (GM Part No. U.S. 12346241, in Canada 10953474).
Pickup Models: Tailgate Handle Pivot Points, Hinges, Latch Bolt, and Linkage	Multi-Purpose Lubricant, Superlube (GM Part No. U.S. 12346241, in Canada 10953474).

Usage	Fluid/Lubricant
Weatherstrip Conditioning	Weatherstrip Lubricant (GM Part No. U.S. 3634770, in Canada 10953518) or Dielectric Silicone Grease (GM Part No. U.S. 12345579, in Canada 992887).
Weatherstrip Squeaks	Synthetic Grease with Teflon, Superlube (GM Part No. U.S. 12371287, in Canada 10953437).

Normal Maintenance Replacement Parts

Replacement parts identified below by name, part number, or specification can be obtained from your dealer.

Part	GM Part Number	ACDelco® Part Number
Oil Filter	88917036	PF2232
Engine Air Cleaner/Filter Pickups Models Van Models	 15282462 15102546	 A2947C A2959C
Fuel Filter(s) Pickup Models Van Models (Primary and Secondary Filter Kit)	 97385488 19121764	 TP1298A RK58095*
Use only the specified filters. *Racor service kit includes primary filter, secondary filter and o-rings.		

Engine Drive Belt Routing

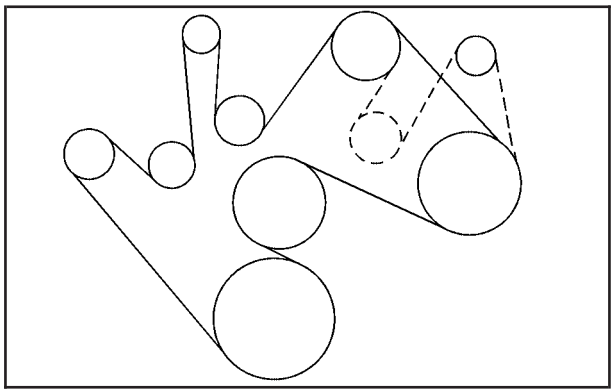

Maintenance Record

After the scheduled services are performed, record the date, odometer reading, who performed the service, and the type of services performed in the boxes provided. See *Maintenance Requirements on page 86*. Any additional information from *Owner Checks and Services on page 96* can be added on the following record pages. You should retain all maintenance receipts.

Maintenance Record

Date	Odometer Reading	Serviced By	Maintenance I or Maintenance II	Services Performed

Maintenance Record (cont'd)

Date	Odometer Reading	Serviced By	Maintenance I or Maintenance II	Services Performed

Maintenance Record (cont'd)

Date	Odometer Reading	Serviced By	Maintenance I or Maintenance II	Services Performed

Maintenance Record (cont'd)

Date	Odometer Reading	Serviced By	Maintenance I or Maintenance II	Services Performed

A

Automatic Transmission, Fluid 57

C

Canadian Owners 2
Capacities and Specifications
Specification Charts 84
Check Engine Light 16
Checking Coolant 67, 70
Checking Engine Oil 49
Cold Weather Starting (Diesel Engine) 5
Coolant
Engine 65
Surge Tank Pressure Cap 71
Cooling System 73

D

Diesel
Engine Fuel 28
Filling a Portable Fuel Container 45
Filling Your Tank 43
Fuel Requirements and Fuel System 28
Diesel (cont.)
Running Out of Fuel 39
Very Cold Weather Operation 31
Water in Fuel 32
Water in Fuel Light Chart 33
What Fuel to Use 29
Driver Information Center (DIC) 21

E

Elevated Idle 6
Emissions Inspection and Maintenance
Programs 17
Engine
Air Cleaner/Filter 54
Compartment Overview 46
Coolant 65
Oil 49
Oil Life System 52
Overheating 71
Reduced Power Light 19
Engine Coolant Heater 11
Engine Oil Additives 52
Engine Specifications 84

F

Fuel
- At Each Fuel Fill 96
- Diesel Engine 28
- Diesel Requirements and Fuel System 28
- Filling a Portable Fuel Container 45
- Filling Your Tank 43
- Filter Replacement 40
- Gage 20
- Running Out of 39
- Water in Warning Light 21
- What to Use 29

Fuel Operated Heater (FOH) 10
Fuel Priming 36

G

Gage
- Fuel 20
- Oil Pressure 18

H

How to Add Coolant to the Coolant Surge Tank 75, 81
How to Add Fluid 60, 64
How to Check 58, 61
How to Reset the Engine Oil Life System 53

I

If No Steam Is Coming From Your Engine 72
If Steam Is Coming From Your Engine 71
If the Light Comes On 17
If Your Diesel Engine Won't Start 5
Installation Instructions 9
Instrument Panel Cluster 14

L

Light
Reduced Engine Power 19
Water in Fuel Warning 21
Lights
Malfunction Indicator Lamp 16
Wait to Start 19
Water in Fuel Light Chart 33

M

Maintenance Schedule
At Each Fuel Fill 96
At Least Once a Month 97
At Least Once a Year 98
Introduction 86
Maintenance Requirements 86
Scheduled Maintenance 89
Using 87
Your Vehicle and the Environment 86
Malfunction Indicator Lamp 16
Manual High Idle System
(Van Models Only) 7

O

Oil, Engine 49
Oil, Engine Oil Life System 52
Oil Pressure Gage 18
Overheating, Engine 71
Owners, Canadian 2

P

Pickup Models 39, 54, 73
Power
Reduced Engine Light 19

R

Reduced Engine Power Light 19
Running Out of Fuel 39

S

Scheduled Maintenance 89
Specification Charts 84
Starting the Diesel Engine 4
Starting Your Engine 4
Surge Tank Pressure Cap, Coolant 71

T

To Use the Engine Coolant Heater 11
Towing
Trailer 26
Transmission, Automatic Fluid 57

U

Usage Guidelines 8

V

Van Models 39, 79

W

Wait to Start Light 19
Water in Fuel 32
Water in Fuel Light Chart 33
Water in Fuel Warning Light 21
What Fuel to Use in Canada 30
What Kind of Engine Oil to Use 50
What to Do with Used Oil 53
What to Use 66, 69
When to Add Engine Oil 50
When to Change Engine Oil 52
When to Check and Change
(Pickup Models) 57
When to Check and Change (Van Models) 61
Winter Cover 8