# 2004 Saturn ION Owner Manual


**Seats and Restraint Systems** ..... 1-1
- Front Seats ..... 1-2
- Rear Seats ..... 1-7
- Safety Belts ..... 1-8
- Child Restraints ..... 1-29
- Air Bag Systems ..... 1-50
- Restraint System Check ..... 1-59

**Features and Controls** ..... 2-1
- Keys ..... 2-3
- Doors and Locks ..... 2-9
- Windows ..... 2-14
- Theft-Deterrent Systems ..... 2-17
- Starting and Operating Your Vehicle ..... 2-18
- Mirrors ..... 2-36
- OnStar® System ..... 2-43
- Storage Areas ..... 2-44
- Sunroof ..... 2-45

**Instrument Panel** ..... 3-1
- Instrument Panel Overview ..... 3-4
- Climate Controls ..... 3-20
- Warning Lights, Gages, and Indicators ..... 3-27
- Message Center ..... 3-41
- Audio System(s) ..... 3-46

**Driving Your Vehicle** ..... 4-1
- Your Driving, the Road, and Your Vehicle ..... 4-2
- Towing ..... 4-31

**Service and Appearance Care** ..... 5-1
- Service ..... 5-3
- Fuel ..... 5-5
- Checking Things Under the Hood ..... 5-10
- Headlamp Aiming ..... 5-47
- Bulb Replacement ..... 5-48
- Windshield Wiper Blade Replacement ..... 5-57
- Tires ..... 5-58
- Appearance Care ..... 5-87
- Vehicle Identification ..... 5-94
- Electrical System ..... 5-95
- Capacities and Specifications ..... 5-102

**Maintenance Schedule** ..... 6-1
- Maintenance Schedule ..... 6-2

**Customer Assistance and Information** ..... 7-1
- Customer Assistance and Information ..... 7-2
- Reporting Safety Defects ..... 7-9

**Index** ..... 1



SATURN and the SATURN Emblem are registered trademarks of Saturn Corporation and the name ION is a trademark of Saturn Corporation. GENERAL MOTORS and GM are registered trademarks of General Motors Corportation.

This manual includes the latest information at the time it was printed. We reserve the right to make changes after that time without further notice.

Please keep this manual in your vehicle, so it will be there if you ever need it when you're on the road. If you sell the vehicle, please leave this manual in it so the new owner can use it.

## Canadian Owners

A French language copy of this manual can be obtained from your dealer or from:

Helm, Incorporated
P.O. Box 07130
Detroit, MI 48207

## How to Use This Manual

Many people read the owner manual from beginning to end when they first receive their new vehicle. If you do this, it can help you learn about the features and controls for the vehicle. Pictures and words work together in the owner manual to explain things.

## Index

A good place to look for what you need is the Index in back of the manual. It is an alphabetical list of what is in the manual, and the page number where you will find it.

Litho in U.S.A.
Part No. 04ION B First Edition

©Copyright General Motors Corporation 11/25/03
All Rights Reserved

## Safety Warnings and Symbols

You will find a number of safety cautions in this book. We use a box and the word CAUTION to tell you about things that could hurt you if you were to ignore the warning.

**⚠ CAUTION:**

**These mean there is something that could hurt you or other people.**

In the caution area, we tell you what the hazard is. Then we tell you what to do to help avoid or reduce the hazard. Please read these cautions. If you don't, you or others could be hurt.

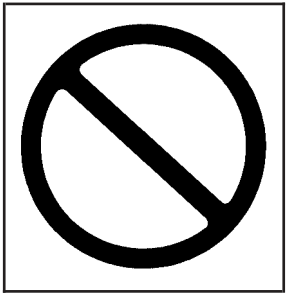

You will also find a circle with a slash through it in this book. This safety symbol means "Don't," "Don't do this" or "Don't let this happen."

## Vehicle Damage Warnings

Also, in this manual you will find these notices:

***Notice:*** **These mean there is something that could damage your vehicle.**

A notice tells about something that can damage your vehicle. Many times, this damage would not be covered by your vehicle's warranty, and it could be costly. But the notice will tell you what to do to help avoid the damage.

When you read other manuals, you might see CAUTION and NOTICE warnings in different colors or in different words.

There are also warning labels on your vehicle. They use the same words, CAUTION or NOTICE.

## Vehicle Symbols

The vehicle has components and labels that use symbols instead of text. Symbols are shown along with the text describing the operation or information relating to a specific component, control, message, gage, or indicator.

If you need help figuring out a specific name of a component, gage, or indicator, reference the following topics:

- Seats and Restraint Systems in Section 1
- Features and Controls in Section 2
- Instrument Panel Overview in Section 3
- Climate Controls in Section 3
- Warning Lights, Gages, and Indicators in Section 3
- Audio System(s) in Section 3
- Engine Compartment Overview in Section 5

These are some examples of symbols that may be found on the vehicle:

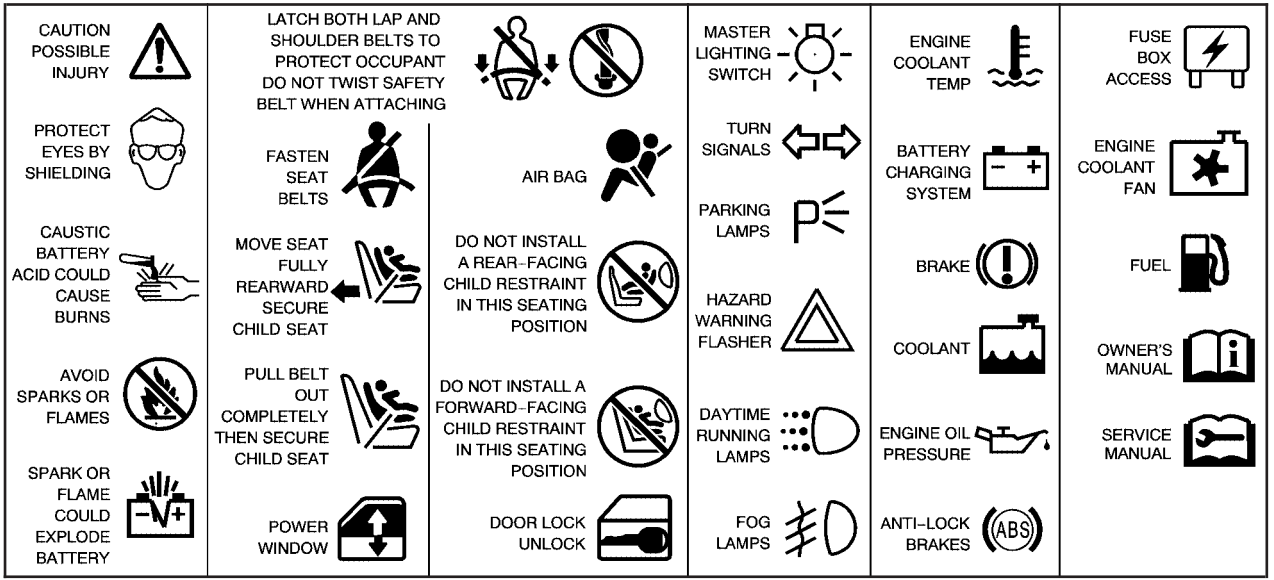

## NOTES

# Section 1 Seats and Restraint Systems


**Front Seats** .....1-2
- Manual Seats .....1-2
- Driver Seat Height Adjuster .....1-3
- Reclining Seatbacks .....1-3
- Head Restraints .....1-5
- Passenger Folding Seatback .....1-6

**Rear Seats** .....1-7
- Split Folding Rear Seat .....1-7

**Safety Belts** .....1-8
- Safety Belts: They Are for Everyone .....1-8
- Questions and Answers About Safety Belts .....1-13
- How to Wear Safety Belts Properly .....1-14
- Driver Position .....1-14
- Safety Belt Use During Pregnancy .....1-21
- Right Front Passenger Position .....1-22
- Rear Seat Passengers .....1-22
- Rear Safety Belt Comfort Guides for Children and Small Adults .....1-26
- Safety Belt Pretensioners .....1-28
- Safety Belt Extender .....1-28

**Child Restraints** .....1-29
- Older Children .....1-29
- Infants and Young Children .....1-32
- Child Restraint Systems .....1-35
- Where to Put the Restraint .....1-38
- Top Strap .....1-39
- Top Strap Anchor Location .....1-41
- Lower Anchorages and Top Tethers for Children (LATCH System) .....1-42
- Securing a Child Restraint Designed for the LATCH System .....1-44
- Securing a Child Restraint in a Rear Seat Position .....1-44
- Securing a Child Restraint in the Right Front Seat Position .....1-47

**Air Bag Systems** .....1-50
- Where Are the Air Bags? .....1-52
- When Should an Air Bag Inflate? .....1-55
- What Makes an Air Bag Inflate? .....1-56
- How Does an Air Bag Restrain? .....1-56
- What Will You See After an Air Bag Inflates? .....1-56
- Servicing Your Air Bag-Equipped Vehicle .....1-58
- Adding Equipment to Your Air Bag-Equipped Vehicle .....1-58

**Restraint System Check** .....1-59
- Checking Your Restraint Systems .....1-59
- Replacing Restraint System Parts After a Crash .....1-59

# Front Seats

## Manual Seats

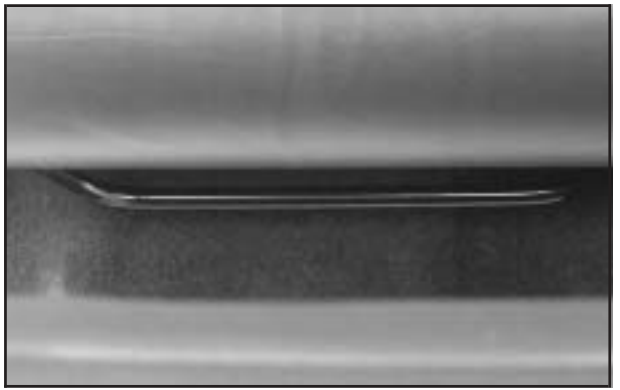

**⚠ CAUTION:**

**You can lose control of the vehicle if you try to adjust a manual driver's seat while the vehicle is moving. The sudden movement could startle and confuse you, or make you push a pedal when you do not want to. Adjust the driver's seat only when the vehicle is not moving.**

Lift the bar located under the front of the seat to unlock it. Slide the seat to where you want it and release the bar. Try to move the seat with your body to be sure the seat is locked in place.

## Driver Seat Height Adjuster



If your vehicle has this feature, the driver's seat height adjuster is located on the left side of the seat.

To raise the seat, ratchet the lever upward until the seat is at the desired height. To lower the seat, ratchet the lever downward until the seat is at the desired height.

## Reclining Seatbacks



Lift the lever to release the seatback, then move the seatback to where you want it. Release the lever to lock the seatback in place. Press rearward on the seatback to be sure it is locked into place.

**⚠ CAUTION:**

**If the seatback is not locked, it could move forward in a sudden stop or crash. That could cause injury to the person sitting there. Always press rearward on the seatback to be sure it is locked.**



But don't have a seatback reclined if your vehicle is moving.

**⚠ CAUTION:**

**Sitting in a reclined position when your vehicle is in motion can be dangerous. Even if you buckle up, your safety belts can not do their job when you are reclined like this.**

**The shoulder belt can not do its job because it will not be against your body. Instead, it will be in front of you. In a crash you could go into it, receiving neck or other injuries.**

**The lap belt can not do its job either. In a crash the belt could go up over your abdomen. The belt forces would be there, not at your pelvic bones. This could cause serious internal injuries.**

**For proper protection when the vehicle is in motion, have the seatback upright. Then sit well back in the seat and wear your safety belt properly.**

## Head Restraints



Press the button on the side of the head restraint to adjust it.



Adjust your head restraint so that the top of the restraint is closest to the top of your head. This position reduces the chance of a neck injury in a crash.

## Passenger Folding Seatback

The front passenger's seatback may fold flat. To fold the seatback, do the following:

1. Lift the bar under the seat to unlock it.
2. Slide the seat as far back as it will go and release the bar. Try to move the seat with your body to make sure it is locked into place.



3. Lift the recliner lever, located on the outside of the seat, and fold the seat forward until the seatback disengages. Continue to fold the seat forward until it locks in the folded position. Pull up on the seatback to be sure it is locked.



**⚠ CAUTION:**

**If you fold the seatback forward to carry longer objects, such as skis, be sure any such cargo is not near an air bag. In a crash, an inflating air bag might force that object toward a person. This could cause severe injury or even death. Secure objects away from the area in which an air bag would inflate. For more information, see "Where Are the Air Bags?" and "Loading Your Vehicle," in the Index.**

# Rear Seats

## Split Folding Rear Seat

You can fold either side of the rear seatback down for more cargo space.

To lower the rear seatback, follow these steps:



1. If you have a sedan and it is equipped with this feature, open the trunk and pull one or both of the small handles located in the center of the trunk.



2. Once the handle is pulled, the seatback can be pushed open through the trunk, or pulled open from the inside of the vehicle.

To raise the rear seatback, lift it up and rearward until you hear a click. Push and pull on the seat back to be sure it is locked into place.

**⚠ CAUTION:**

**If the seatback is not locked, it could move forward in a sudden stop or crash. That could cause injury to the person sitting there. Always pull forward on the top of the seatback at the area of the latch to be sure it is locked.**

**⚠ CAUTION:**

**A safety belt that is improperly routed, not properly attached, or twisted will not provide the protection needed in a crash. The person wearing the belt could be seriously injured. After raising the rear seatback, always check to be sure that the safety belts are properly routed and attached, and are not twisted.**

# Safety Belts

## Safety Belts: They Are for Everyone

This part of the manual tells you how to use safety belts properly. It also tells you some things you should not do with safety belts.

**⚠ CAUTION:**

**Do not let anyone ride where he or she can not wear a safety belt properly. If you are in a crash and you are not wearing a safety belt, your injuries can be much worse. You can hit things inside the vehicle or be ejected from it. You can be seriously injured or killed. In the same crash, you might not be, if you are buckled up. Always fasten your safety belt, and check that your passengers' belts are fastened properly too.**

## ⚠ CAUTION:

**It is extremely dangerous to ride in a cargo area, inside or outside of a vehicle. In a collision, people riding in these areas are more likely to be seriously injured or killed. Do not allow people to ride in any area of your vehicle that is not equipped with seats and safety belts. Be sure everyone in your vehicle is in a seat and using a safety belt properly.**



Your vehicle has a light that comes on as a reminder to buckle up. See *Safety Belt Reminder Light on page 3-30*.

In most states and in all Canadian provinces, the law says to wear safety belts. Here's why: *They work*.

You never know if you'll be in a crash. If you do have a crash, you don't know if it will be a bad one.

A few crashes are mild, and some crashes can be so serious that even buckled up, a person wouldn't survive. But most crashes are in between. In many of them, people who buckle up can survive and sometimes walk away. Without belts they could have been badly hurt or killed.

After more than 30 years of safety belts in vehicles, the facts are clear. In most crashes buckling up does matter... a lot!

## Why Safety Belts Work

When you ride in or on anything, you go as fast as it goes.

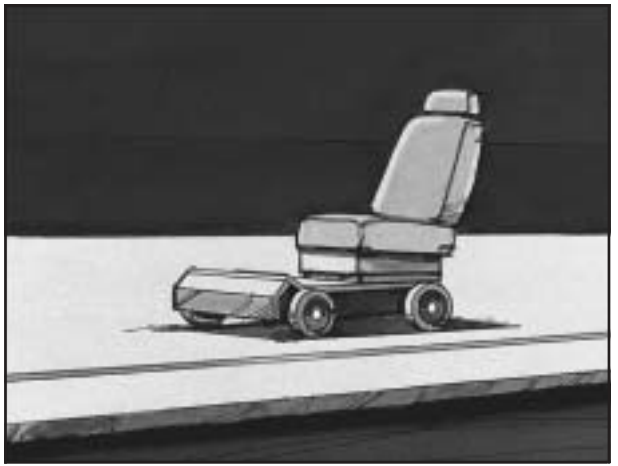

Take the simplest vehicle. Suppose it's just a seat on wheels.



Put someone on it.

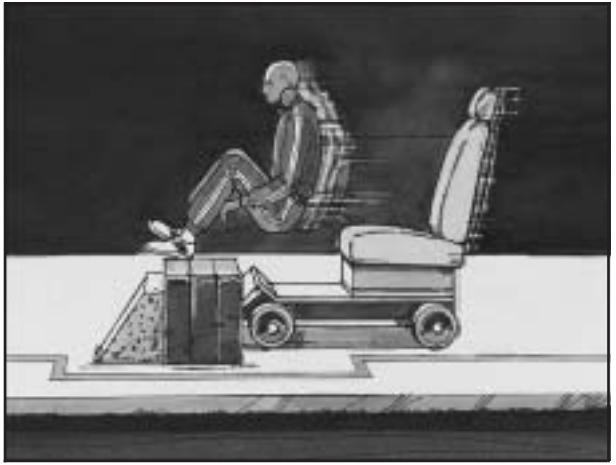

Get it up to speed. Then stop the vehicle. The rider doesn't stop.



The person keeps going until stopped by something. In a real vehicle, it could be the windshield...

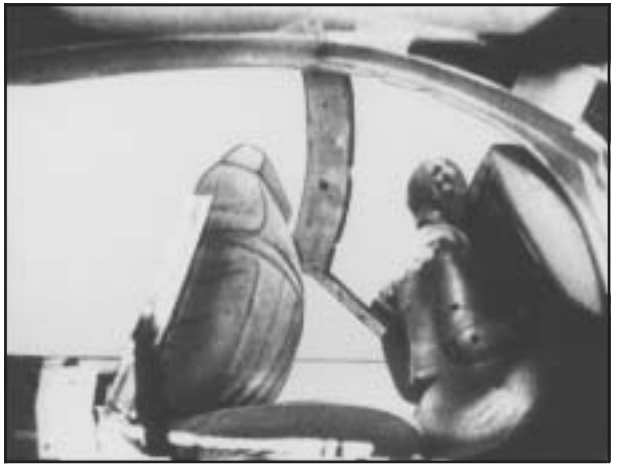

or the instrument panel...



or the safety belts!

With safety belts, you slow down as the vehicle does. You get more time to stop. You stop over more distance, and your strongest bones take the forces. That's why safety belts make such good sense.

## Questions and Answers About Safety Belts

**Q: Won't I be trapped in the vehicle after an accident if I'm wearing a safety belt?**

**A:** You *could* be – whether you're wearing a safety belt or not. But you can unbuckle a safety belt, even if you're upside down. And your chance of being conscious during and after an accident, so you *can* unbuckle and get out, is *much* greater if you are belted.

**Q: If my vehicle has air bags, why should I have to wear safety belts?**

**A:** Air bags are in many vehicles today and will be in most of them in the future. But they are supplemental systems only; so they work *with* safety belts – not instead of them. Every air bag system ever offered for sale has required the use of safety belts. Even if you're in a vehicle that has air bags, you still have to buckle up to get the most protection. That's true not only in frontal collisions, but especially in side and other collisions.

**Q: If I'm a good driver, and I never drive far from home, why should I wear safety belts?**

**A:** You may be an excellent driver, but if you're in an accident – even one that isn't your fault – you and your passengers can be hurt. Being a good driver doesn't protect you from things beyond your control, such as bad drivers.

Most accidents occur within 25 miles (40 km) of home. And the greatest number of serious injuries and deaths occur at speeds of less than 40 mph (65 km/h).

Safety belts are for everyone.

## How to Wear Safety Belts Properly

This part is only for people of adult size.

Be aware that there are special things to know about safety belts and children. And there are different rules for smaller children and babies. If a child will be riding in your vehicle, see *Older Children on page 1-29* or *Infants and Young Children on page 1-32*. Follow those rules for everyone's protection.

First, you'll want to know which restraint systems your vehicle has.

We'll start with the driver position.

## Driver Position

This part describes the driver's restraint system.

### Lap-Shoulder Belt

The driver has a lap-shoulder belt. Here is how to wear it properly.

1. Close and lock the door.
2. Adjust the seat so you can sit up straight. To see how, see "Seats" in the Index.



3. Pick up the latch plate and pull the belt across you. Do not let it get twisted.

   The shoulder belt may lock if you pull the belt across you very quickly. If this happens, let the belt go back slightly to unlock it. Then pull the belt across you more slowly.
4. Push the latch plate into the buckle until it clicks. If the belt stops before it reaches the buckle, let it go back all the way and start again.

Pull up on the latch plate to make sure it is secure. If the belt is not long enough, see *Safety Belt Extender on page 1-28*.

Make sure the release button on the buckle is positioned so you would be able to unbuckle the safety belt quickly if you ever had to.



5. To make the lap part tight, pull down on the buckle end of the belt as you pull up on the shoulder belt.

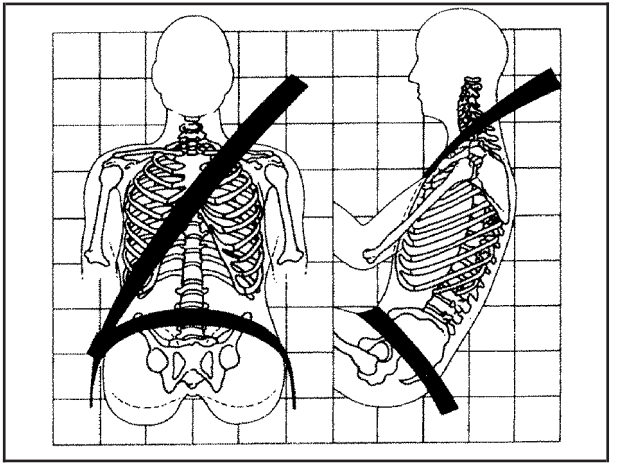

The lap part of the belt should be worn low and snug on the hips, just touching the thighs. In a crash, this applies force to the strong pelvic bones. And you would be less likely to slide under the lap belt. If you slid under it, the belt would apply force at your abdomen. This could cause serious or even fatal injuries. The shoulder belt should go over the shoulder and across the chest. These parts of the body are best able to take belt restraining forces.

The safety belt locks if there is a sudden stop or crash, or if you pull the belt very quickly out of the retractor.

## Shoulder Belt Height Adjuster (Sedan)

Before you begin to drive, move the shoulder belt adjuster to the height that is right for you. Adjust the height so that the shoulder portion of the belt is centered on your shoulder. The belt should be away from your face and neck, but not falling off your shoulder.



To move it up or down, press the square button in the center of the height adjuster knob and move the height adjuster to the desired position. After you move the adjuster to where you want it, release the button. Try to move the adjuster up and down without touching the square button to make sure it has locked into position.

**Q:** **What's wrong with this?**

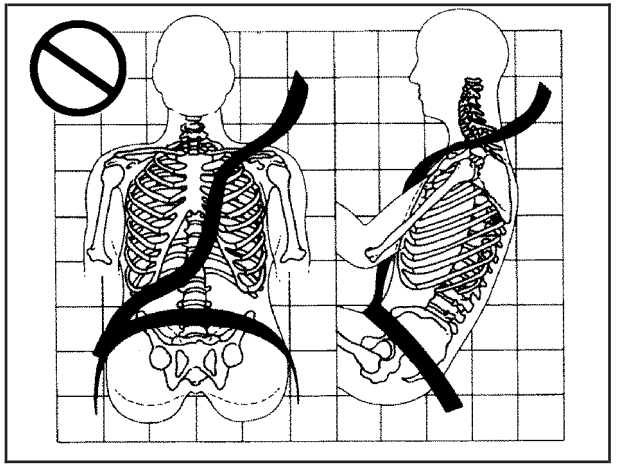

**A:** The shoulder belt is too loose. It will not give nearly as much protection this way.

**⚠ CAUTION:**

**You can be seriously hurt if your shoulder belt is too loose. In a crash, you would move forward too much, which could increase injury. The shoulder belt should fit against your body.**

**Q:** **What's wrong with this?**

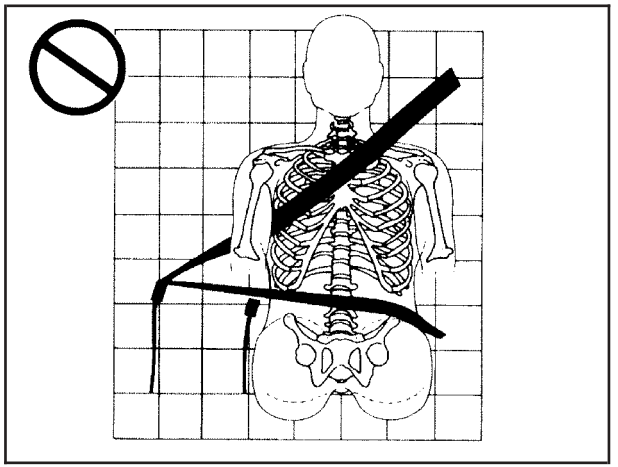

**A:** The belt is buckled in the wrong place.

**⚠ CAUTION:**

**You can be seriously injured if your belt is buckled in the wrong place like this. In a crash, the belt would go up over your abdomen. The belt forces would be there, not at the pelvic bones. This could cause serious internal injuries. Always buckle your belt into the buckle nearest you.**

**Q:** **What's wrong with this?**

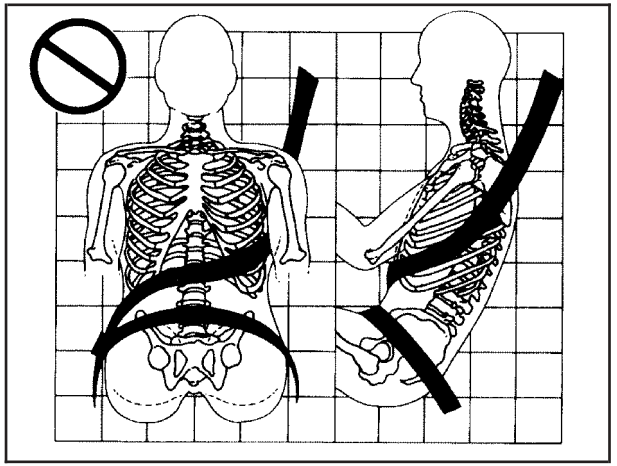

**A:** The shoulder belt is worn under the arm. It should be worn over the shoulder at all times.

**⚠ CAUTION:**

**You can be seriously injured if you wear the shoulder belt under your arm. In a crash, your body would move too far forward, which would increase the chance of head and neck injury. Also, the belt would apply too much force to the ribs, which are not as strong as shoulder bones. You could also severely injure internal organs like your liver or spleen.**

**Q:** **What's wrong with this?**

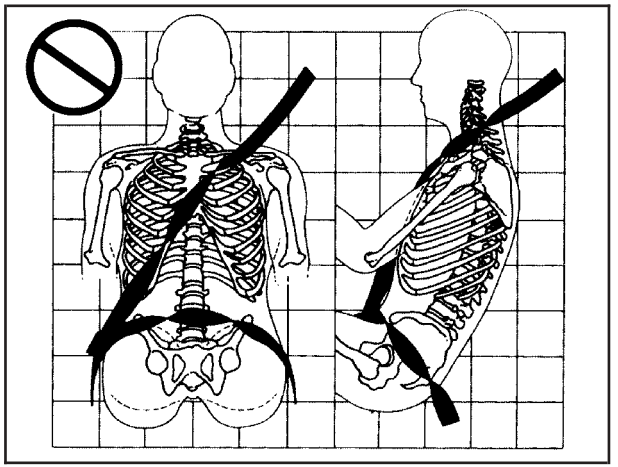

**A:** The belt is twisted across the body.

**⚠ CAUTION:**

**You can be seriously injured by a twisted belt. In a crash, you wouldn't have the full width of the belt to spread impact forces. If a belt is twisted, make it straight so it can work properly, or ask your retailer to fix it.**



To unlatch the belt, just push the button on the buckle. The belt should go back out of the way.

Before you close the door, be sure the belt is out of the way. If you slam the door on it, you can damage both the belt and your vehicle.

## Safety Belt Use During Pregnancy

Safety belts work for everyone, including pregnant women. Like all occupants, they are more likely to be seriously injured if they don't wear safety belts.



A pregnant woman should wear a lap-shoulder belt, and the lap portion should be worn as low as possible, below the rounding, throughout the pregnancy.

The best way to protect the fetus is to protect the mother. When a safety belt is worn properly, it's more likely that the fetus won't be hurt in a crash. For pregnant women, as for anyone, the key to making safety belts effective is wearing them properly.

## Right Front Passenger Position

To learn how to wear the right front passenger's safety belt properly, see *Driver Position on page 1-14*.

The right front passenger's safety belt works the same way as the driver's safety belt — except for one thing. If you ever pull the shoulder portion of the belt out all the way, you will engage the child restraint locking feature. If this happens, just let the belt go back all the way and start again.

## Rear Seat Passengers

It is very important for rear seat passengers to buckle up! Accident statistics show that unbelted people in the rear seat are hurt more often in crashes than those who are wearing safety belts.

Rear passengers who are not safety belted can be thrown out of the vehicle in a crash. And they can strike others in the vehicle who are wearing safety belts.

## Rear Seat Passenger Positions

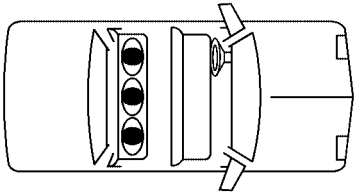

**Sedan**

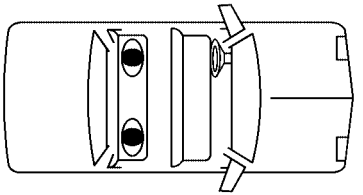

**Coupe**

## Lap-Shoulder Belt

All rear seating positions have lap-shoulder belts. Here is how to wear one properly.



1. Pick up the latch plate and pull the belt across you. Do not let it get twisted.

   The shoulder belt may lock if you pull the belt across you very quickly. If this happens, let the belt go back slightly to unlock it. Then pull the belt across you more slowly.

2. Push the latch plate into the buckle until it clicks. If your vehicle has a center passenger position, be sure to use the correct buckle when buckling your lap-shoulder belt. If you find that the latch plate will not go fully into the buckle, see if you are using the buckle for the center passenger position.

   Pull up on the latch plate to make sure it is secure.

   When the shoulder belt is pulled out all the way, it will lock. If it does, let it go back all the way and start again.

   Make sure the release button on the buckle is positioned so you would be able to unbuckle the safety belt quickly if you ever had to.



3. To make the lap part tight, pull down on the buckle end of the belt as you pull up on the shoulder part.

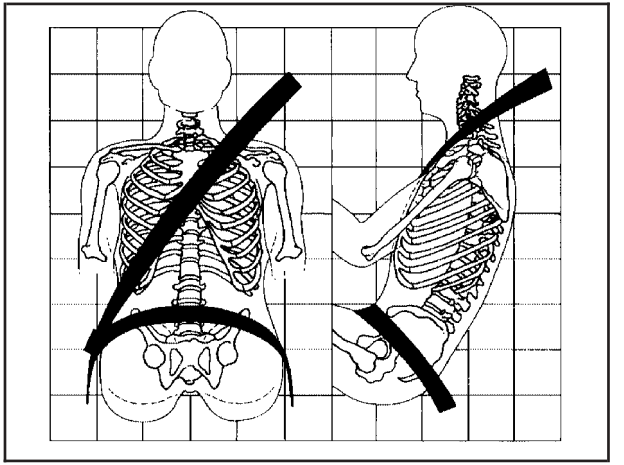

The lap part of the belt should be worn low and snug on the hips, just touching the thighs. In a crash this applies force to the strong pelvic bones. And you would be less likely to slide under the lap belt. If you slid under it, the belt would apply force at your abdomen. This could cause serious or even fatal injuries. The shoulder belt should go over the shoulder and across the chest. These parts of the body are best able to take belt restraining forces.

The safety belt locks if there is a sudden stop or a crash, or if you pull the belt very quickly out of the retractor.

**⚠ CAUTION:**

**You can be seriously hurt if your shoulder belt is too loose. In a crash, you would move forward too much, which could increase injury. The shoulder belt should fit against your body.**



To unlatch the belt, just push the button on the buckle.

## Rear Safety Belt Comfort Guides for Children and Small Adults

Rear shoulder belt comfort guides will provide added safety belt comfort for older children who have outgrown booster seats and for small adults. When installed on a shoulder belt, the comfort guide better positions the belt away from the neck and head.

There is one guide available for each outside passenger position in the rear seat. To provide added safety belt comfort for children who have outgrown child restraints and booster seats and for smaller adults, the comfort guides may be installed on the shoulder belts.
Here is how to install a comfort guide and use the safety belt:

1. Fold down the rear seatback of the desired seating position. See *Split Folding Rear Seat on page 1-7* for instructions about how to fold the rear seatback.



2. Remove the guide located on the trim behind the seatback from its storage clip. Pull the guide around the rear seatback.

**⚠ CAUTION:**

**If the seatback is not locked, it could move forward in a sudden stop or crash. That could cause injury to the person sitting there. Always press rearward on the seatback to be sure it is locked.**

3. Return the rear seatback to its upright position and make sure it is latched into place.



4. Slide the guide under and past the belt. The elastic cord must be under the belt. Then, place the guide over the belt, and insert the two edges of the belt into the slots of the guide.

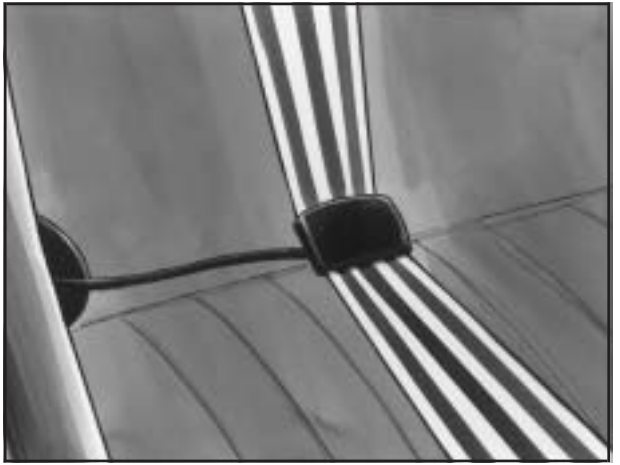

5. Be sure that the belt is not twisted and it lies flat. The elastic cord must be under the belt and the guide on top.



6. Buckle, position and release the safety belt as described in *Rear Seat Passengers on page 1-22*. Make sure that the shoulder belt crosses the shoulder.

To remove and store the comfort guides, squeeze the belt edges together so that you can take them out of the guides. Fold down the rear seatbacks. Store the guides on their storage clips. Lift the rear seatbacks to their original seating positions.

## Safety Belt Pretensioners

Your vehicle has safety belt pretensioners. You'll find them on the retractor portion of the safety belts for the driver and right front passenger. They help the safety belts reduce a person's forward movement in a moderate to severe crash in which the front of the vehicle hits something.

Pretensioners work only once. If they activate in a crash, you'll need to get new pretensioners and may need other new parts for your safety belt system. See *Replacing Restraint System Parts After a Crash on page 1-59* for more information.

## Safety Belt Extender

If the vehicle's safety belt will fasten around you, you should use it.

But if a safety belt is not long enough to fasten, your retailer will order you an extender. When you go in to order it, take the heaviest coat you will wear, so the extender will be long enough for you. The extender will be just for you, and just for the seat in your vehicle that you choose. Do not let someone else use it, and use it only for the seat it is made to fit. To wear it, just attach it to the regular safety belt.

# Child Restraints

## Older Children



Older children who have outgrown booster seats should wear the vehicle's safety belts.

**Q: What is the proper way to wear safety belts?**

**A:** If possible, an older child should wear a lap-shoulder belt and get the additional restraint a shoulder belt can provide. The shoulder belt should not cross the face or neck. The lap belt should fit snugly below the hips, just touching the top of the thighs. It should never be worn over the abdomen, which could cause severe or even fatal internal injuries in a crash.

Accident statistics show that children are safer if they are restrained in the rear seat.

In a crash, children who are not buckled up can strike other people who are buckled up, or can be thrown out of the vehicle. Older children need to use safety belts properly.



**⚠ CAUTION:**

**Never do this.**

**Here two children are wearing the same belt. The belt can not properly spread the impact forces. In a crash, the two children can be crushed together and seriously injured. A belt must be used by only one person at a time.**

**Q: What if a child is wearing a lap-shoulder belt, but the child is so small that the shoulder belt is very close to the child's face or neck?**

**A:** If the child is sitting in a seat next to a window, move the child toward the center of the vehicle. See *Rear Safety Belt Comfort Guides for Children and Small Adults on page 1-26*. If the child is sitting in the center rear seat passenger position, move the child toward the safety belt buckle. In either case, be sure that the shoulder belt still is on the child's shoulder, so that in a crash the child's upper body would have the restraint that belts provide.



## ⚠ CAUTION:

**Never do this.**

**Here a child is sitting in a seat that has a lap-shoulder belt, but the shoulder part is behind the child. If the child wears the belt in this way, in a crash the child might slide under the belt. The belt's force would then be applied right on the child's abdomen. That could cause serious or fatal injuries.**

Wherever the child sits, the lap portion of the belt should be worn low and snug on the hips, just touching the child's thighs. This applies belt force to the child's pelvic bones in a crash.

## Infants and Young Children

Everyone in a vehicle needs protection! This includes infants and all other children. Neither the distance traveled nor the age and size of the traveler changes the need, for everyone, to use safety restraints. In fact, the law in every state in the United States and in every Canadian province says children up to some age must be restrained while in a vehicle.

Every time infants and young children ride in vehicles, they should have the protection provided by appropriate restraints. Young children should not use the vehicle's adult safety belts alone, unless there is no other choice. Instead, they need to use a child restraint.



**⚠ CAUTION:**

**People should never hold a baby in their arms while riding in a vehicle. A baby does not weigh much — until a crash. During a crash a baby will become so heavy it is not possible to**

**CAUTION: (Continued)**

**CAUTION: (Continued)**

hold it. For example, in a crash at only 25 mph (40 km/h), a 12-lb. (5.5 kg) baby will suddenly become a 240-lb. (110 kg) force on a person's arms. A baby should be secured in an appropriate restraint.



**⚠ CAUTION:**

Children who are up against, or very close to, any air bag when it inflates can be seriously injured or killed. Air bags plus lap-shoulder belts offer outstanding protection for adults and older children, but not for young children and infants. Neither the vehicle's safety belt system nor its air bag system is designed for them. Young children and infants need the protection that a child restraint system can provide.

**Q: What are the different types of add-on child restraints?**

**A:** Add-on child restraints, which are purchased by the vehicle's owner, are available in four basic types. Selection of a particular restraint should take into consideration not only the child's weight, height and age but also whether or not the restraint will be compatible with the motor vehicle in which it will be used.

For most basic types of child restraints, there are many different models available. When purchasing a child restraint, be sure it is designed to be used in a motor vehicle. If it is, the restraint will have a label saying that it meets federal motor vehicle safety standards.

The restraint manufacturer's instructions that come with the restraint, state the weight and height limitations for a particular child restraint. In addition, there are many kinds of restraints available for children with special needs.

**⚠ CAUTION:**

**Newborn infants need complete support, including support for the head and neck. This is necessary because a newborn infant's neck is weak and its head weighs so much compared with the rest of its body. In a crash, an infant in a rear-facing seat settles into the restraint, so the crash forces can be distributed across the strongest part of an infant's body, the back and shoulders. Infants always should be secured in appropriate infant restraints.**

## ⚠ CAUTION:

**The body structure of a young child is quite unlike that of an adult or older child, for whom the safety belts are designed. A young child's hip bones are still so small that the vehicle's regular safety belt may not remain low on the hip bones, as it should. Instead, it may settle up around the child's abdomen. In a crash, the belt would apply force on a body area that is unprotected by any bony structure. This alone could cause serious or fatal injuries. Young children always should be secured in appropriate child restraints.**

## Child Restraint Systems

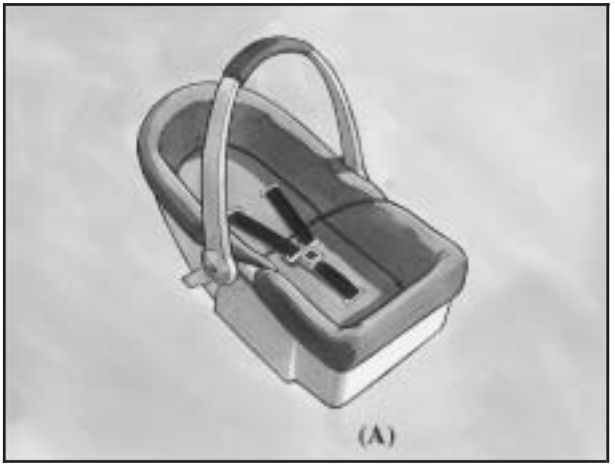


An infant car bed (A), a special bed made for use in a motor vehicle, is an infant restraint system designed to restrain or position a child on a continuous flat surface. Make sure that the infant's head rests toward the center of the vehicle.

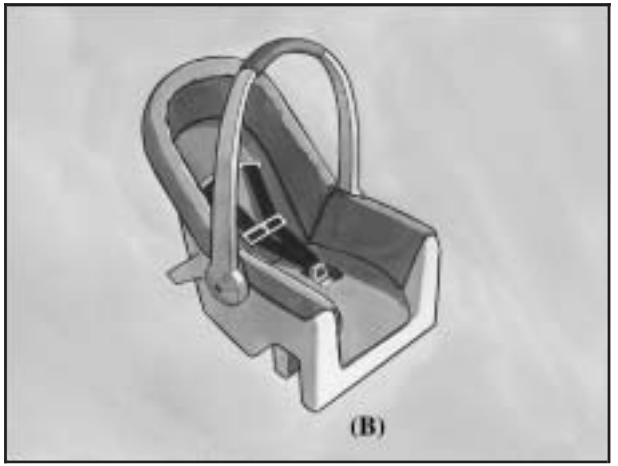


A rear-facing infant seat (B) provides restraint with the seating surface against the back of the infant. The harness system holds the infant in place and, in a crash, acts to keep the infant positioned in the restraint.

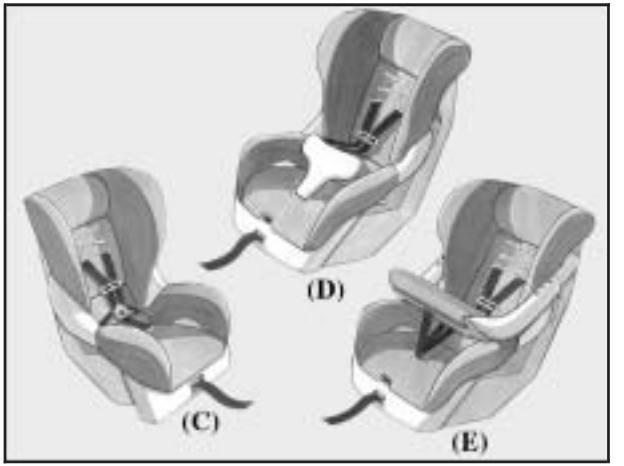


A forward-facing child seat (C-E) provides restraint for the child's body with the harness and also sometimes with surfaces such as T-shaped or shelf-like shields.

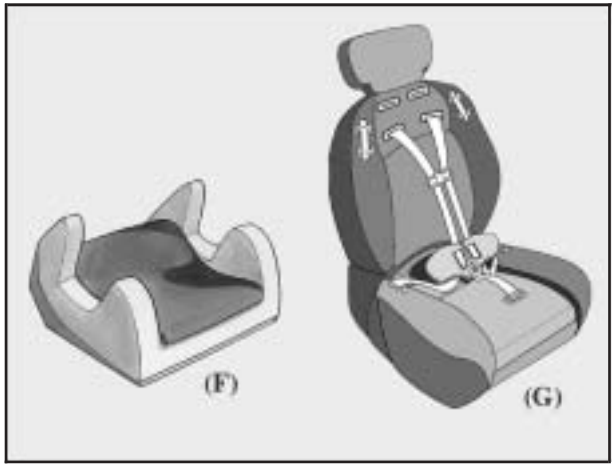


A booster seat (F-G) is a child restraint designed to improve the fit of the vehicle's safety belt system. Some booster seats have a shoulder belt positioner, and some high-back booster seats have a five-point harness. A booster seat can also help a child to see out the window.

**Q: How do child restraints work?**

**A:** A child restraint system is any device designed for use in a motor vehicle to restrain, seat, or position children. A built-in child restraint system is a permanent part of the motor vehicle. An add-on child restraint system is a portable one, which is purchased by the vehicle's owner.

For many years, add-on child restraints have used the adult belt system in the vehicle. To help reduce the chance of injury, the child also has to be secured within the restraint. The vehicle's belt system secures the add-on child restraint in the vehicle, and the add-on child restraint's harness system holds the child in place within the restraint.

One system, the three-point harness, has straps that come down over each of the infant's shoulders and buckle together at the crotch. The five-point harness system has two shoulder straps, two hip straps and a crotch strap. A shield may take the place of hip straps. A T-shaped shield has shoulder straps that are attached to a flat pad which rests low against the child's body. A shelf- or armrest-type shield has straps that are attached to a wide, shelf-like shield that swings up or to the side.

When choosing a child restraint, be sure the child restraint is designed to be used in a vehicle. If it is, it will have a label saying that it meets federal motor vehicle safety standards.

Then follow the instructions for the restraint. You may find these instructions on the restraint itself or in a booklet, or both. These restraints use the belt system or the LATCH system in your vehicle, but the child also has to be secured within the restraint to help reduce the chance of personal injury. When securing an add-on child restraint, refer to the instructions that come with the restraint which may be on the restraint itself or in a booklet, or both, and to this manual. The child restraint instructions are important, so if they are not available, obtain a replacement copy from the manufacturer.

## Where to Put the Restraint

Accident statistics show that children are safer if they are restrained in the rear rather than the front seat. We, therefore, recommend that child restraints be secured in a rear seat, including an infant riding in a rear-facing infant seat, a child riding in a forward-facing child seat and an older child riding in a booster seat. *Never* put a rear-facing child restraint in the front passenger seat. Here's why:

**⚠ CAUTION:**

**A child in a rear-facing child restraint can be seriously injured or killed if the right front passenger's air bag inflates. This is because the back of the rear-facing child restraint would be very close to the inflating air bag. Always secure a rear-facing child restraint in a rear seat.**

**CAUTION: (Continued)**

**CAUTION: (Continued)**

**If you secure a forward-facing child restraint in the right front seat, always move the front passenger seat as far back as it will go. It is better to secure the child restraint in a rear seat.**

Wherever you install it, be sure to secure the child restraint properly.

Keep in mind that an unsecured child restraint can move around in a collision or sudden stop and injure people in the vehicle. Be sure to properly secure any child restraint in your vehicle – even when no child is in it.

## Top Strap

Some child restraints have a top strap, or “top tether.” It can help restrain the child restraint during a collision. For it to work, a top strap must be properly anchored to the vehicle. Some top strap-equipped child restraints are designed for use with or without the top strap being anchored. Others require the top strap always to be anchored. Be sure to read and follow the instructions for your child restraint. If yours requires that the top strap be anchored, don’t use the restraint unless it is anchored properly.

If the child restraint does not have a top strap, one can be obtained, in kit form, for many child restraints. Ask the child restraint manufacturer whether or not a kit is available.

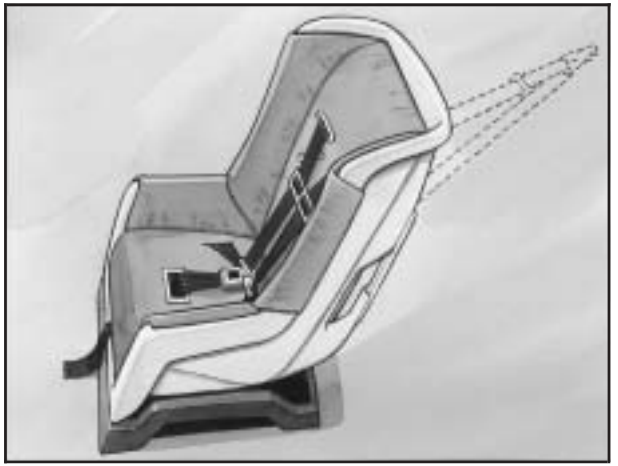

In Canada, the law requires that forward-facing child restraints have a top strap, and that the strap be anchored. In the United States, some child restraints also have a top strap. If your child restraint has a top strap, it should be anchored.

Anchor the top strap to an anchor point specified in *Top Strap Anchor Location on page 1-41*. Be sure to use an anchor point located on the same side of the vehicle as the seating position where the child restraint will be placed.

**⚠ CAUTION:**

**Each top tether bracket is designed to anchor only one child restraint. Attaching more than one child restraint to a single bracket could cause the anchor to come loose or even break during a crash. A child or others could be injured if this happens. To help prevent injury to people and damage to your vehicle, attach only one child restraint per bracket.**

Once you have the top strap anchored, you'll be ready to secure the child restraint itself. Tighten the top strap when and as the child restraint manufacturer's instructions say.

## Top Strap Anchor Location

Your vehicle has top strap anchors installed for the rear seating positions only.

Do not secure a child restraint with a top strap in the right front passenger's position if a national or local law requires that the top strap be anchored, or if the instructions that come with the child restraint say that the top strap must be anchored. There is no place to anchor the top strap in this position.

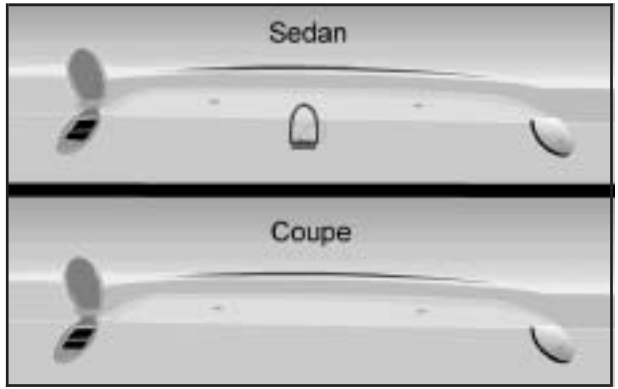


The coupe (B) has two top tether anchors located behind the rear seat on the filler panel. The sedan (A) has three top tether anchors located at the left, right and center positions on the rear window trim. In order to access the anchors, you will have to open the covers if the anchor has one.

## Lower Anchorages and Top Tethers for Children (LATCH System)

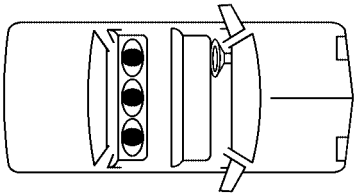

Your vehicle has the LATCH system. You will find anchors for all three rear seating positions on the sedan and both rear seat outside passenger positions on the coupe.

This system, designed to make installation of child restraints easier, does not use the vehicle's safety belts. Instead, it uses vehicle anchors and child restraint attachments to secure the restraints. Some restraints also use another vehicle anchor to secure a top tether strap.

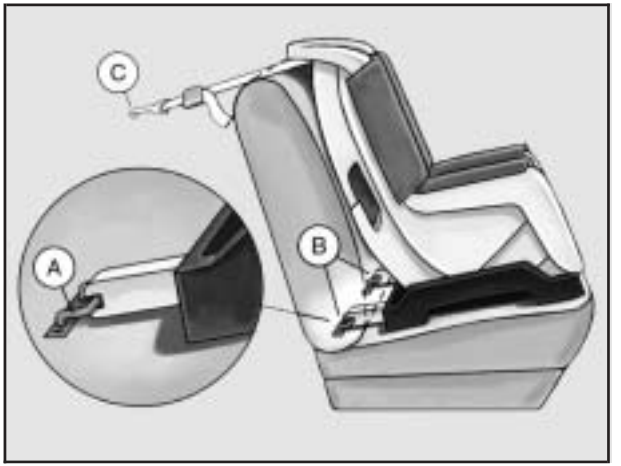


A. Lower Anchorage
B. Lower Anchorage
C. Top Tether

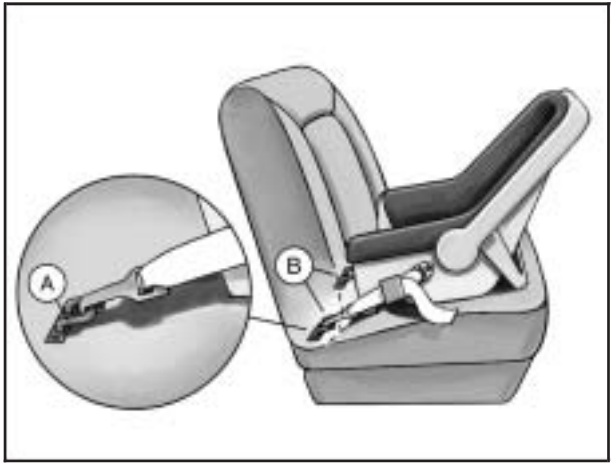


A. Lower Anchorage

B. Lower Anchorage

In order to use the LATCH system in your vehicle, you need a child restraint designed for that system.



To assist you in locating the lower anchors for this child restraint system, each seating position with the LATCH system has a label on the seatback at each lower anchor position.

The labels are located where the seatback meets the seat cushion.

## ⚠ CAUTION:

**If a LATCH-type child restraint is not attached to its anchorage points, the restraint will not be able to protect the child correctly. In a crash, the child could be seriously injured or killed. Make sure that a LATCH-type child restraint is properly installed using the anchorage points, or use the vehicle's safety belts to secure the restraint, following the instructions that came with that restraint, and also the instructions in this manual.**

## Securing a Child Restraint Designed for the LATCH System

1. Find the LATCH anchorages for the seating position you want to use, where the bottom of the seatback meets the back of the seat cushion. See *Lower Anchorages and Top Tethers for Children (LATCH System) on page 1-42*.
2. Put the child restraint on the seat.
3. Attach and tighten the LATCH attachments on the child restraint to the LATCH anchorages in the vehicle. The child restraint instructions will show you how.
4. If the child restraint is forward-facing, attach and tighten the top tether to the top tether anchorage. The child restraint instructions will show you how. Also see *Top Strap on page 1-39*.
5. Push and pull the child restraint in different directions to be sure it is secure.

To remove the child restraint, simply unhook the top tether from the top tether anchorage and then disconnect the LATCH attachments from the LATCH anchorages.

## Securing a Child Restraint in a Rear Seat Position

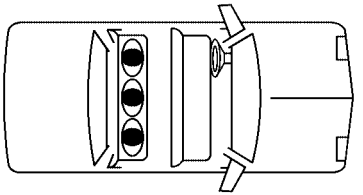

**Sedan**

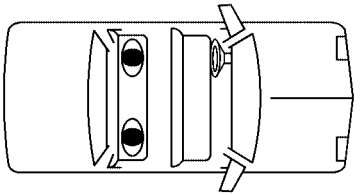

**Coupe**

If your child restraint is equipped with the LATCH system, see *Lower Anchorages and Top Tethers for Children (LATCH System) on page 1-42*. See *Top Strap on page 1-39* if the child restraint has one.

If your child restraint does not have the LATCH system, you will be using the lap-shoulder belt. Be sure to follow the instructions that came with the child restraint. Secure the child in the child restraint when and as the instructions say.

1. Put the restraint on the seat.
2. Pick up the latch plate, and run the lap and shoulder portions of the vehicle's safety belt through or around the restraint. The child restraint instructions will show you how.



3. Buckle the belt. Be sure the latch plate clicks when you put it into the buckle. This means you are using the correct buckle. Also, make sure the release button is positioned so you would be able to unbuckle the safety belt quickly if you ever had to.



4. Pull the rest of shoulder belt all the way out of the retractor to set the lock.



5. To tighten the belt, push down on the child restraint, pull the shoulder portion of the belt to tighten the lap portion of the belt and feed the shoulder belt back into the retractor. If you are using a forward-facing child restraint, you may find it helpful to use your knee to push down on the child restraint as you tighten the belt.
6. Push and pull the child restraint in different directions to be sure it is secure.

To remove the child restraint, just unbuckle the vehicle's safety belt and let it go back all the way. The safety belt will move freely again and be ready to work for an adult or larger child passenger.

## Securing a Child Restraint in the Right Front Seat Position

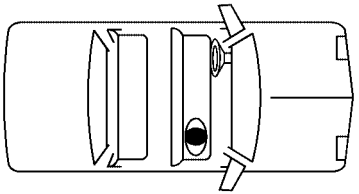

If your child restraint is equipped with the LATCH system, see *Lower Anchorages and Top Tethers for Children (LATCH System) on page 1-42*. See *Top Strap on page 1-39* if the child restraint has one.

There is no top strap anchor in the right front passenger's position. Do not secure a child seat in this position if a national or local law requires that the top strap be anchored, or if the instructions that come with the child restraint say that the top strap must be anchored.

Your vehicle has a right front passenger air bag. *Never* put a rear-facing child restraint in this seat. Here is why:

**⚠ CAUTION:**

**A child in a rear-facing child restraint can be seriously injured or killed if the right front passenger's air bag inflates. This is because the back of the rear-facing child restraint would be very close to the inflating air bag. Always secure a rear-facing child restraint in a rear seat.**

A rear seat is a safer place to secure a forward-facing child restraint. If you need to secure a forward-facing child restraint in the right front seat, you will be using the lap-shoulder belt to secure the child restraint. Be sure to follow the instructions that came with the child restraint. Secure the child in the child restraint when and as the instructions say.

1. Because your vehicle has a right front passenger air bag, always move the seat as far back as it will go before securing a forward-facing child restraint. See *Manual Seats on page 1-2*.
2. Put the child restraint on the seat.
3. Pick up the latch plate, and run the lap and shoulder portions of the vehicle's safety belt through or around the restraint. The child restraint instructions will show you how.



4. Buckle the belt. Make sure the release button is positioned so you would be able to unbuckle the safety belt quickly if you ever had to.



5. Pull the rest of the shoulder belt all the way out of the retractor to set the lock.



6. To tighten the belt, push down on the child restraint, pull the shoulder portion of the belt to tighten the lap portion of the belt and feed the shoulder belt back into the retractor. You may find it helpful to use your knee to push down on the child restraint as you tighten the belt.
7. Push and pull the child restraint in different directions to be sure it is secure.

To remove the child restraint, just unbuckle the vehicle's safety belt and let it go back all the way. The safety belt will move freely again and be ready to work for an adult or larger child passenger.

# Air Bag Systems

This part explains the air bag systems.

Your vehicle has a frontal air bag for the driver and another frontal air bag for the right front passenger. Your vehicle may also have roof mounted side impact air bags. Roof mounted side impact air bags are available for the driver and the passenger seated directly behind the driver and for the right front passenger and the passenger seated directly behind that passenger.

If your vehicle has side impact air bags, the words AIR BAG will appear on the air bag covering on the ceiling near the driver's and right front passenger's window.

Frontal air bags are designed to help reduce the risk of injury from the force of an inflating frontal air bag. But these air bags must inflate very quickly to do their job and comply with federal regulations.

Here are the most important things to know about the air bag systems:

**⚠ CAUTION:**

**You can be severely injured or killed in a crash if you are not wearing your safety belt – even if you have air bags. Wearing your safety belt during a crash helps reduce your chance of hitting things inside the vehicle or being ejected from it. Air bags are "supplemental restraints" to the safety belts. All air bags are designed to work with safety belts but do not replace them.**

**Frontal air bags for the driver and right front passenger are designed to work only in moderate to severe crashes where the front of your vehicle hits something. They are not designed to inflate in rollover, rear or low-speed frontal crashes, or in many side crashes. And, for some unrestrained occupants, frontal air bags may provide less protection in frontal crashes than more forceful air bags have provided in the past.**

**CAUTION: (Continued)**

**CAUTION: (Continued)**

The roof-mounted side impact air bags are designed to inflate only in moderate to severe crashes where something hits the side of your vehicle. They are not designed to inflate in frontal, in rollover or in rear crashes. Everyone in your vehicle should wear a safety belt properly — whether or not there is an air bag for that person.

**⚠ CAUTION:**

Both frontal and side impact air bags inflate with great force, faster than the blink of an eye. If you're too close to an inflating air bag, as you would be if you were leaning forward, it could seriously injure you. Safety belts help keep you in position for air bag inflation before

**CAUTION: (Continued)**

**CAUTION: (Continued)**

and during a crash. Always wear your safety belt even with frontal air bags. The driver should sit as far back as possible while still maintaining control of the vehicle. Occupants should not lean on or sleep against the door.

**⚠ CAUTION:**

Anyone who is up against, or very close to, any air bag when it inflates can be seriously injured or killed. Air bags plus lap-shoulder belts offer the best protection for adults, but not for young children and infants. Neither the vehicle's safety belt system nor its air bag system is designed for them. Young children and infants need the protection that a child restraint system can provide. Always secure children properly in your vehicle. To read how, see the part of this manual called "Older Children" or "Infants and Young Children."



There is an air bag readiness light on the instrument panel cluster, which shows the air bag symbol.

The system checks the air bag electrical system for malfunctions. The light tells you if there is an electrical problem. See *Air Bag Readiness Light on page 3-30* for more information.

## Where Are the Air Bags?



The driver's frontal air bag is in the middle of the steering wheel.



The right front passenger's frontal air bag is in the instrument panel on the passenger's side.



If your vehicle has a side impact air bag for the driver and the person seated directly behind the driver, it is in the ceiling above the side windows.



If your vehicle has a side impact air bag for the right front passenger and the person seated directly behind that passenger, it is in the ceiling above the side windows.

**⚠ CAUTION:**

**If something is between an occupant and an air bag, the bag might not inflate properly or it might force the object into that person causing severe injury or even death. The path of an inflating air bag must be kept clear. Don't put anything between an occupant and an air bag, and don't attach or put anything on the steering wheel hub or on or near any other air bag covering. And, because your vehicle has side impact air bags, never secure anything to the roof of your vehicle by routing the rope or tiedown through any door or window opening. If you do, the path of an inflating side impact air bag will be blocked. The path of an inflating air bag must be kept clear.**

## When Should an Air Bag Inflate?

The driver's and right front passenger's frontal air bags are designed to inflate in moderate to severe frontal or near-frontal crashes. But they are designed to inflate only if the impact speed is above the system's designed "threshold level."

In addition, your vehicle has "dual stage" frontal air bags, which adjust the amount of restraint according to crash severity. For moderate frontal impacts, these air bags inflate at a level less than full deployment. For more severe frontal impacts, full deployment occurs.

If the front of your vehicle goes straight into a wall that does not move or deform, the threshold level for the reduced deployment is about 16 to 20 mph (26 to 32 km/h), and the threshold level for a full deployment is 25 to 30 mph (40 to 48 hm/h). The threshold level can vary, however, with specific vehicle design, so that it can be somewhat above or below this range. If your vehicle strikes something that will move or deform, such as a parked car, the threshold level with be higher.

The driver's and right front passenger's frontal air bags are not designed to inflate in rollovers, rear impacts, or in many side impacts because inflation would not help the occupant.

The side impact air bags are designed to inflate in moderate to severe side crashes. A side impact air bag will inflate if the crash severity is above the system's designed "threshold level." The threshold level can vary with specific vehicle design. Side impact air bags are not designed to inflate in frontal or near-frontal impacts, rollovers or rear impacts, because inflation would not help the occupant. A side impact air bag will only deploy on the side of the vehicle that is struck.

It is possible that, in a crash involving the front of your vehicle, only one of the two frontal air bags in your vehicle will deploy. This is rare, but it can happen in a crash just severe enough to make a frontal air bag inflate.

In any particular crash, no one can say whether an air bag should have inflated simply because of the damage to a vehicle or because of what the repair costs were. For frontal air bags, inflation is determined by the angle of the impact and how quickly the vehicle slows down in frontal and near-frontal impacts. For side impact air bags, inflation is determined by the location and severity of the impact.

## What Makes an Air Bag Inflate?

In an impact of sufficient severity, the air bag sensing system detects that the vehicle is in a crash. For both frontal and side impact air bags, the sensing system triggers a release of gas from the inflator, which inflates the air bag. The inflator, air bag, and related hardware are all part of the air bag modules inside the steering wheel and in the instrument panel in front of the right front passenger. For vehicles with side impact air bags, the air bag modules are located in the ceiling of the vehicle, near the side windows.

## How Does an Air Bag Restrain?

In moderate to severe frontal or near frontal collisions, even belted occupants can contact the steering wheel or the instrument panel. In moderate to severe side collisions, even belted occupants can contact the inside of the vehicle. The air bag supplements the protection provided by safety belts. Air bags distribute the force of the impact more evenly over the occupant's upper body, stopping the occupant more gradually. But the frontal air bags would not help you in many types of collisions, including rollovers, rear impacts, and many side impacts, primarily because an occupant's motion is not toward the air bag. Side impact air bags would not help you in many types of collisions, including frontal or near frontal collisions, rollovers, and rear impacts, primarily because an occupant's motion is not toward those air bags. Air bags should never be regarded as anything more than a supplement to safety belts, and then only in moderate to severe frontal or near-frontal collisions for the driver's and right front passenger's frontal air bags, and only in moderate to severe side collisions for vehicles with a driver's and right front passenger's side impact air bag.

## What Will You See After an Air Bag Inflates?

After an air bag inflates, it quickly deflates, so quickly that some people may not even realize the air bag inflated. Some components of the air bag module — the steering wheel hub for the driver's air bag, the instrument panel for the right front passenger's bag or the ceiling of your vehicle near the side windows — will be hot for a short time. The parts of the bag that come into contact with you may be warm, but not too hot to touch. There will be some smoke and dust coming from the vents in the deflated air bags. Air bag inflation doesn't prevent the driver from seeing or being able to steer the vehicle, nor does it stop people from leaving the vehicle.

## ⚠ CAUTION:

**When an air bag inflates, there is dust in the air. This dust could cause breathing problems for people with a history of asthma or other breathing trouble. To avoid this, everyone in the vehicle should get out as soon as it is safe to do so. If you have breathing problems but can not get out of the vehicle after an air bag inflates, then get fresh air by opening a window or a door. If you experience breathing problems following an air bag deployment, you should seek medical attention.**

In many crashes severe enough to inflate an air bag, windshields are broken by vehicle deformation. Additional windshield breakage may also occur from the right front passenger air bag.

- Air bags are designed to inflate only once. After an air bag inflates, you'll need some new parts for your air bag system. If you don't get them, the air bag system won't be there to help protect you in another crash. A new system will include air bag modules and possibly other parts. The service manual for your vehicle covers the need to replace other parts.
- Your vehicle is equipped with a crash sensing and diagnostic module, which records information about the air bag system. The module records information about the readiness of the system, when the system commands air bag inflation and driver's safety belt usage at deployment.
- Let only qualified technicians work on your air bag system. Improper service can mean that your air bag system won't work properly. See your dealer for service.

***Notice:*** **If you damage the covering for the driver's or the right front passenger's air bag, or the side impact air bag covering on the ceiling near the side windows, the bag may not work properly. You may have to replace the air bag module in the steering wheel, both the air bag module and the instrument panel for the right front passenger's air bag, or side impact air bag module and ceiling covering for the roof-mounted side impact air bag. Do not open or break the air bag coverings.**

## Servicing Your Air Bag-Equipped Vehicle

Air bags affect how your vehicle should be serviced. There are air bag system parts in several places around your vehicle. You don't want the system to inflate while someone is working on your vehicle. Your retailer and the Saturn Service Manual have information about servicing your vehicle and the air bag systems. To purchase a service manual, see *Service Publications Ordering Information on page 7-10*.

**⚠ CAUTION:**

**For up to one minute after the ignition key is turned off and the battery is disconnected, an air bag can still inflate during improper service. You can be injured if you are close to an air bag when it inflates. Avoid wires wrapped with yellow tape, yellow coverings, or yellow connectors. They are probably part of the air bag systems. Be sure to follow proper service procedures, and make sure the person performing work for you is qualified to do so.**

Air bag systems do not need regular maintenance.

## Adding Equipment to Your Air Bag-Equipped Vehicle

**Q: If I add a luggage carrier or sunroof to the roof of my vehicle, will it keep the roof-mounted side impact air bags from working properly?**

**A:** As long as the luggage carrier or sunroof is properly installed so that the vehicle's basic structure isn't changed, it's not likely to keep the roof-mounted side impact air bags from working properly in a crash.

# Restraint System Check

## Checking Your Restraint Systems

Now and then, make sure the safety belt reminder light and all your belts, buckles, latch plates, retractors and anchorages are working properly. Look for any other loose or damaged safety belt system parts. If you see anything that might keep a safety belt system from doing its job, have it repaired.

Torn or frayed safety belts may not protect you in a crash. They can rip apart under impact forces. If a belt is torn or frayed, get a new one right away.

Also look for any opened or broken air bag covers, and have them repaired or replaced. (The air bag system does not need regular maintenance.)

## Replacing Restraint System Parts After a Crash

**⚠ CAUTION:**

**A crash can damage the restraint systems in your vehicle. A damaged restraint system may not properly protect the person using it, resulting in serious injury or even death in a crash. To help make sure your restraint systems are working properly after a crash, have them inspected and any necessary replacements made as soon as possible.**

If you have had a crash, do you need new belts or LATCH system parts?

After a very minor collision, nothing may be necessary. But if the belts were stretched, as they would be if worn during a more severe crash, then you need new parts.

If the LATCH system was being used during a more severe crash, you may need new LATCH system parts.

If belts are cut or damaged, replace them. Collision damage also may mean you will need to have LATCH system, safety belt or seat parts repaired or replaced. New parts and repairs may be necessary even if the belt or LATCH system was not being used at the time of the collision.

If your seat adjuster will not work after a crash, the special part of the safety belt that goes through the seat to the adjuster may need to be replaced.

If an air bag inflates, you will need to replace air bag system parts. See the part about the air bag system earlier in this manual.

If the frontal air bags inflate you will need to replace the driver's and right front passengers safety belt retractor assembly. Be sure to do so. Then the new retractor assembly will be there to help protect you in a collision.

After a crash you may need to replace the driver and front passenger's safety belt retractor assemblies, even if the frontal air bags have not deployed. The driver and front passenger's safety belt retractor assemblies contain the safety belt pretensioners. Have your safety belt pretensioners checked if your vehicle has been in a collision, or if your air bag readiness light stays on after you start your vehicle or while you are driving. See *Air Bag Readiness Light on page 3-30*.

# Section 2 Features and Controls


**Keys** .....2-3
Remote Keyless Entry System .....2-4
Remote Keyless Entry System Operation .....2-5

**Doors and Locks** .....2-9
Door Locks .....2-9
Power Door Locks .....2-10
Delayed Locking .....2-10
Programmable Automatic Door Locks .....2-10
Rear Door Security Locks .....2-11
Lockout Protection .....2-11
Leaving Your Vehicle .....2-11
Rear Doors (Coupe) .....2-12
Trunk .....2-12

**Windows** .....2-14
Manual Windows .....2-15
Power Windows .....2-15
Sun Visors .....2-16

**Theft-Deterrent Systems** .....2-17
Passlock® .....2-17

**Starting and Operating Your Vehicle** .....2-18
New Vehicle Break-In .....2-18
Ignition Positions .....2-18
Starting Your Engine .....2-20
Engine Coolant Heater .....2-22
Automatic Transaxle Operation .....2-23
Manual Transaxle Operation .....2-28
Parking Brake .....2-30
Shifting Into Park (P)
(Automatic Transaxle) .....2-31
Shifting Out of Park (P)
(Automatic Transaxle) .....2-33
Parking Your Vehicle
(Manual Transaxle) .....2-33
Parking Over Things That Burn .....2-34
Engine Exhaust .....2-34
Running Your Engine While You
Are Parked .....2-35

# Section 2 Features and Controls


**Mirrors** ....2-36
- Manual Rearview Mirror ....2-36
- Manual Rearview Mirror with OnStar® ....2-36
- Automatic Dimming Rearview Mirror with OnStar®, Compass and Temperature Display ....2-37
- Automatic Dimming Rearview Mirror with Compass and Temperature Display ....2-40
- Outside Remote Control Mirror ....2-42
- Outside Power Mirrors ....2-42
- Outside Convex Mirror ....2-42

**OnStar® System** ....2-43

**Storage Areas** ....2-44
- Glove Box ....2-44
- Cupholder(s) ....2-44
- Center Console Storage Area ....2-44
- Roof Rack System ....2-45
- Convenience Net ....2-45

**Sunroof** ....2-45

# Keys

**⚠ CAUTION:**

**Leaving children in a vehicle with the ignition key is dangerous for many reasons. They could operate the power windows or other controls or even make the vehicle move. The children or others could be badly injured or even killed. Do not leave the keys in a vehicle with children.**



One key works the ignition and all of the lock cylinders on the vehicle.

You may be able to obtain a valet key from you retailer. The valet key only works in the doors and ignition.

***Notice:*** **If you ever lock your keys in your vehicle, you may have to damage the vehicle to get in. Be sure you have spare keys.**

Your key has a transponder in it that matches a decoder in your vehicle's steering column. If a replacement key or additional key is needed, you must have the key code information. Your retailer can make keys for you with the key code information.

## Remote Keyless Entry System

Your keyless entry system operates on a radio frequency subject to Federal Communications Commission (FCC) Rules and with Industry Canada.

This device complies with Part 15 of the FCC Rules. Operation is subject to the following two conditions:

1. This device may not cause interference, and
2. This device must accept any interference received, including interference that may cause undesired operation of the device.

This device complies with RSS-210 of Industry Canada. Operation is subject to the following two conditions:

1. This device may not cause interference, and
2. This device must accept any interference received, including interference that may cause undesired operation of the device.

Changes or modifications to this system by other than an authorized service facility could void authorization to use this equipment.

At times you may notice a decrease in range. This is normal for any remote keyless entry system. If the transmitter does not work or if you have to stand closer to your vehicle for the transmitter to work, try this:

- Check the distance. You may be too far from your vehicle. You may need to stand closer during rainy or snowy weather.
- Check the location. Other vehicles or objects may be blocking the signal. Take a few steps to the left or right, hold the transmitter higher, and try again.
- Check to determine if battery replacement is necessary. See “Battery Replacement” under *Remote Keyless Entry System Operation on page 2-5*.
- If you are still having trouble, see your retailer or a qualified technician for service.

## Remote Keyless Entry System Operation

With this feature, you can lock and unlock the doors or the trunk from about 26 feet (8 m) away using the remote keyless entry transmitter supplied with your vehicle.



**(Lock):** Press this symbol on the remote keyless entry transmitter to lock the doors. This also arms the theft-deterrent system. See “Theft-Deterrent System” following for information on arming the theft-deterrent system.

Your vehicle can be programmed so that the parking lamps will flash and/or the horn will sound when you lock the doors with the remote keyless entry transmitter. See your retailer for more information on programming this feature.

**(Unlock):** Press this symbol on the remote keyless entry transmitter to unlock the driver's door. This also disarms the theft-deterrent system. See "Theft-Deterrent System" following for information on disarming the theft-deterrent system. Press the button again to unlock the rest of the doors.

Your vehicle can be programmed so that the parking lamps will flash and/or the horn will sound when you unlock the doors with the remote keyless entry transmitter. See your retailer for more information on programming this feature.

**(Panic Alarm):** The remote keyless entry transmitter comes equipped with an instant panic alarm. Press the horn symbol when the ignition is turned off. The horn will sound and the parking lamps and dome lamp will flash for up to two minutes. To stop the instant panic alarm, press the symbol again.

**(Trunk):** Press this button to open the trunk. If the vehicle's speed is faster than 2 mph (3 km/h), the trunk will not open when this button is pressed.

## Theft-Deterrent System

The remote keyless entry transmitter is used to arm/disarm the theft-deterrent system. Your vehicle's theft-deterrent system can be programmed to three different modes.

**Active Arming:** The system will arm when the lock button on the remote keyless entry transmitter is pressed. The system will disarm when the unlock button is pressed.

**Passive Arming:** The system will arm itself one minute after the ignition is turned off and the driver's door has been opened and closed. If the lock button on the transmitter is pressed before the minute has passed, the system will arm immediately. The system will disarm when the unlock button is pressed.

**Security System Disable:** The system will not arm.

To change the mode that your vehicle is programmed to, do the following:

1. Turn the ignition to RUN or ACC.
2. Press the panic alarm button on the transmitter slowly four times within five seconds.

3. You must complete one of the following within three seconds to change the mode.
   - To select the active arming mode, press the lock button on the transmitter.
   - To select the passive arming mode, press the trunk release button on the transmitter.
   - To select the security system disable mode, press the unlock button on the transmitter.

A chime will sound once the mode has been selected.

If you accidentally set off the alarm when entering/exiting the vehicle, you can shut it off by pressing any button on the remote keyless entry transmitter other than the panic alarm button.

If you hear three horn chirps when you press the unlock button on the transmitter, that means the vehicle's alarm was triggered while you were away.

## Matching Transmitter(s) to Your Vehicle

Each remote keyless entry transmitter is coded to prevent another transmitter from unlocking your vehicle. If a transmitter is lost or stolen, a replacement can be purchased through your retailer. Remember to bring any remaining transmitters with you when you go to your retailer. When the retailer matches the replacement transmitter to your vehicle, any remaining transmitters must also be matched. Once your dealer has coded the new transmitter, the lost transmitter will not unlock your vehicle. Each vehicle can have a maximum of four transmitters matched to it.

## Battery Replacement

Under normal use, the battery in your remote keyless entry transmitter should last about four years.

You can tell the battery is weak if the transmitter won't work at the normal range in any location. If you have to get close to your vehicle before the transmitter works, it's probably time to change the battery.

***Notice:*** **When replacing the battery, use care not to touch any of the circuitry. Static from your body transferred to these surfaces may damage the transmitter.**



1. Use a flat thin object to pry open the transmitter.



2. Once the transmitter is separated, use a pencil or similar object to remove the old battery. Do not use a metal object.
3. Insert the new battery as the instructions under the cover indicate.
4. Snap the transmitter back together tightly to be sure no moisture can enter.
5. Check the operation of the transmitter.

# Doors and Locks

## Door Locks

**⚠ CAUTION:**

**Unlocked doors can be dangerous.**

- **Passengers — especially children — can easily open the doors and fall out of a moving vehicle. When a door is locked, the handle will not open it. You increase the chance of being thrown out of the vehicle in a crash if the doors are not locked. So, wear safety belts properly and lock the doors whenever you drive.**
- **Young children who get into unlocked vehicles may be unable to get out. A child can be overcome by extreme heat and can suffer permanent injuries or even death from heat stroke. Always lock your vehicle whenever you leave it.**
- **Outsiders can easily enter through an unlocked door when you slow down or stop your vehicle. Locking your doors can help prevent this from happening.**

There are several ways to manually lock your vehicle.

To lock a door from the outside, turn the key toward the front of the vehicle.



From the inside, move the lock control on the door.

## Power Door Locks



From the inside of the vehicle, push the top of the switch to unlock the door. Press the bottom of the switch to lock all of the doors at once.

## Delayed Locking

The delayed locking feature will delay the actual locking of the doors for up to five seconds after exiting the vehicle when the power door lock or remote keyless entry transmitter is used to lock the vehicle.

If any door is open when locking the vehicle, three chimes will be heard signaling that the delayed locking feature is active. Five seconds after the last door is closed, all of the doors will lock and the parking lamps will flash. To cancel the delay and lock the doors immediately, press the lock button a second time.

If the key is in the ignition this feature will not lock the doors.

## Programmable Automatic Door Locks

With this feature the doors will automatically lock when the vehicle is shifted out of PARK (P) for an automatic transaxle, or the vehicle speed is greater than 5mph (8km/h) for a manual transaxle. The doors will automatically unlock when the ignition key is turned to OFF.

To turn the automatic door locking feature on or off, do the following:

1. Turn the ignition key to RUN with the engine off and all of the doors closed.
2. Press and hold the power door lock button in the lock position until the horn chirps twice.

To turn the automatic door unlocking feature on or off, do the following:

1. Turn the ignition key to RUN with the engine off and all of the doors closed.
2. Press and hold the power door lock button in the unlock position until the horn chirps twice.

## Rear Door Security Locks

Your vehicle has rear door security locks that prevent passengers from opening the rear doors from the inside.

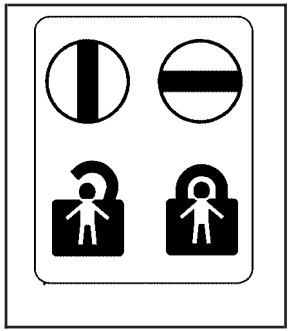

The rear door security locks are located on the inside edge of each rear door. You must open the rear doors to access them.

To set the secondary locks, do the following:

1. Insert the key into the lock next to the rear door security lock label and turn it clockwise for the driver's side and counterclockwise for the passenger's side.
2. Close the door.

When you want to open a rear door when the security lock is on, do the following:

1. Unlock the door using the remote keyless entry transmitter, the front door power lock switch, or by lifting the rear door manual lock.
2. Open the door from the outside.

To cancel the rear door security lock, do the following:

1. Unlock the door and open it from the outside.
2. Insert the key into the slot next to the rear door security lock label and turn it counterclockwise for the driver's side and clockwise for the passenger's side.

## Lockout Protection

If you press the power door lock switch when the key is in the ignition and any door is open, all the doors will lock and only the driver's door will unlock. Be sure to remove the key from the ignition when locking your vehicle.

The lockout protection can be overridden by pressing and holding the power door lock in the lock position for three seconds.

## Leaving Your Vehicle

If you are leaving the vehicle, open your door and set the locks from the inside. Then get out and close the door.

## Rear Doors (Coupe)

Your vehicle has a driver's and passenger's side rear access door. To open the rear access doors, first you must open the driver's or passenger's door.



Then use the handle located on the front edge of the rear door to open it.

When closing the doors, the rear door must be closed and latched before you can close the driver's or passenger's door.

## Trunk

To unlock the trunk from the outside, insert the key and turn the trunk lock cylinder or use the remote keyless entry transmitter.

### ⚠ CAUTION:

**It can be dangerous to drive with the trunk lid open because carbon monoxide (CO) gas can come into your vehicle. You can not see or smell CO. It can cause unconsciousness and even death. If you must drive with the trunk lid open or if electrical wiring or other cable connections must pass through the seal between the body and the trunk lid:**

- **Make sure all other windows are shut.**
- **Turn the fan on your heating or cooling system to its highest speed and select the control setting that will force outside air into your vehicle. See Climate Control System in the Index.**
- **If you have air outlets on or under the instrument panel, open them all the way.**

**See *Engine Exhaust on page 2-34*.**

## Remote Trunk Release



Press the remote trunk release button, located on the lower left side of the instrument panel, to release the trunk lid.

Make sure the remote trunk release lockout feature is not activated. Also, the remote trunk release will only work when either the ignition is in OFF or ACC, the parking brake is engaged or the vehicle speed is less than 2 mph (3 km/h).

## Remote Trunk Release Lockout

Your remote trunk release is equipped with a lockout feature. The switch is located on the inside of the trunk lid, mounted to the trunk lid latch.



To turn the lockout on, slide the switch to the lock symbol. To turn the lockout off, slide the switch to the unlock symbol.

When the lockout is on, the remote trunk release button will not release the trunk lid. However, the trunk lid can still be opened with the key, but not with the keyless entry transmitter.

## Emergency Trunk Release Handle



***Notice:*** **Using the emergency trunk release handle as a tie-down or anchor point when securing items in the trunk may damage it. Use the emergency trunk release handle only to help you open the trunk lid.**

There is a glow-in-the-dark emergency trunk release handle located on the inside of the trunk lid of your vehicle. This handle will glow following exposure to light. Pull the release handle and push the trunk lid open from the inside to open the trunk.

# Windows

**⚠ CAUTION:**

**Leaving children, helpless adults, or pets in a vehicle with the windows closed is dangerous. They can be overcome by the extreme heat and suffer permanent injuries or even death from heat stroke. Never leave a child, a helpless adult, or a pet alone in a vehicle, especially with the windows closed in warm or hot weather.**



## Manual Windows

On a vehicle with manual windows, use the window crank to open and close each window.

## Power Windows



If your vehicle has power windows, switches located on the driver's door armrest control each of the windows.

In addition, each passenger's door has a window switch that controls that door's window. To operate each window, press the switch forward to close the window and rearward to open it.

## Express-Down Window

The driver's window switch has an express-down feature. This switch is labeled AUTO. Tap the rear of the switch, and the driver's window will open a small amount. If the rear of the switch is fully pressed, the window will go all the way down.

To stop the window while it is lowering, press the front of the switch. To raise the window, press and hold the front of the switch.

## Window Lock Out

The driver's window controls also include a lock out switch. Press the window lock switch to the right to stop rear passengers from using their window switches. The driver can still control all the windows with the lock on. Press the switch to the left to return to normal window operation.

# Sun Visors

To block out glare, you can swing down the visors. You can also swing them to the side.

## Passenger Visor Webbing Clip (Coupe)

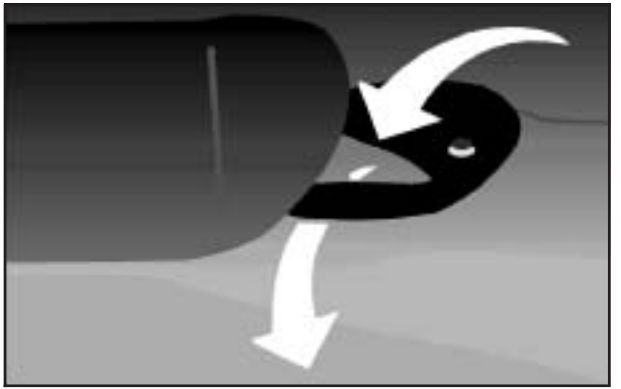

If you have a coupe, the sun visor on the passenger's side of the vehicle has a hook. This hook is designed to hold the safety belt webbing out of the way when accessing the rear seat. Make sure to remove the safety belt from the clip when you are done.

***Notice:*** **Using the safety belt clip to enter or exit the vehicle, or in any way other than as it was intended, can damage your vehicle. Do not use the safety belt clip in any way other than as it was intended.**

# Theft-Deterrent Systems

Vehicle theft is big business, especially in some cities. Although your vehicle has a number of theft-deterrent features, we know that nothing we put on it can make it impossible to steal.

## Passlock®

Your vehicle is equipped with the Passlock® theft-deterrent system.

Passlock® is a passive theft-deterrent system. Passlock® enables fuel if the ignition lock cylinder is turned with a valid key. If a correct key is not used or the ignition lock cylinder is tampered with, fuel is disabled.

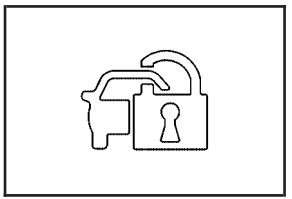

During normal operation, the security light will go off approximately five seconds after the key is turned to the RUN ignition position following an engine start.

If the engine stalls and the security light flashes, wait until the light stops flashing before trying to restart the engine. Remember to release the key from START as soon as the engine starts.

If the engine is running and the security light comes on, you will be able to restart the engine if you turn the engine off. However, your Passlock® system is not working properly and must be serviced by your retailer. Your vehicle is not protected by Passlock® at this time. You may also want to check the fuses, see *Fuses and Circuit Breakers on page 5-95*. See your retailer for service.

# Starting and Operating Your Vehicle

## New Vehicle Break-In

***Notice:*** **Your vehicle does not need an elaborate "break-in." But it will perform better in the long run if you follow these guidelines:**

- **Do not drive at any one speed — fast or slow — for the first 500 miles (805 km). Do not make full-throttle starts.**
- **Avoid making hard stops for the first 200 miles (322 km) or so. During this time your new brake linings are not yet broken in. Hard stops with new linings can mean premature wear and earlier replacement. Follow this breaking-in guideline every time you get new brake linings.**
- **Do not tow a trailer during the first 1,000 miles (1 600 km). See *Towing a Trailer on page 4-39* for more information.**

## Ignition Positions

With the key in the ignition switch, you can turn it to four different positions.




***Notice:*** **If your key seems stuck in LOCK and you can not turn it, be sure you are using the correct key; if so, is it all the way in? If it is, then turn the steering wheel left and right while you turn the key hard. Turn the key only with your hand. Using a tool to force it could break the key or the ignition switch. If none of these works, then your vehicle needs service.**

**(LOCK):** This position locks your steering column in a vehicle with a manual transmission. It is a theft-deterrent feature. You will only be able to remove your key when the ignition is turned to LOCK.

If you have an automatic transaxle, the ignition switch can't be turned to LOCK unless the shift lever is in PARK (P).

**⚠ CAUTION:**

**If you have a manual transaxle removing the key from the ignition switch will lock the steering column and result in a loss of ability to steer the vehicle. This could cause a collision. If you need to turn the engine off while the vehicle is moving, turn the key to ACC.**

**ACC (ACCESSORY):** This position operates some of your electrical accessories. It unlocks the steering wheel and ignition.

**(RUN):** This is the position the switch returns to after you start your engine and release the switch. The switch stays in the RUN position when the engine is running. But even when the ignition is not running, you can use RUN to operate your electrical accessories and to display some warning and indicator lights.

**(START):** This position starts the engine. When the engine starts, release the key. The ignition switch will return to RUN for normal driving.

A warning tone will sound if you open the driver's door when the key has not been removed from the ignition.

## Retained Accessory Power (RAP)

Your vehicle has RAP a feature that allows certain accessories to continue to work for up to 10 minutes after the ignition has been turned off. The radio, wipers (high speed only), power windows, sunroof, and rear accessory power outlet will continue to work until 10 minutes have passed or any door has been opened.

# Starting Your Engine

## Automatic Transaxle

Move your shift lever to PARK (P) or NEUTRAL (N). Your engine won't start in any other position — that's a safety feature. To restart when you're already moving, use NEUTRAL (N) only.

***Notice:*** **Shifting into PARK (P) with the vehicle moving could damage the transaxle. Shift into PARK (P) only when your vehicle is stopped.**

## Manual Transaxle

The gear selector should be in NEUTRAL and the parking brake engaged. Hold the clutch pedal to the floor and start the engine. Your vehicle won't start if the clutch pedal is not all the way down – that's a safety feature.

# Starting Your Engine

1. With your foot off the accelerator pedal, turn your ignition key to START. When the engine starts, let go of the key. The idle speed will go down as your engine gets warm.

***Notice:*** **Holding your key in START for longer than 15 seconds at a time will cause your battery to be drained much sooner. And the excessive heat can damage your starter motor. Wait about 15 seconds between each try to help avoid draining your battery or damaging your starter.**

2. If it doesn't start, wait about 15 seconds and try again to start the engine by turning the ignition key to START. Wait about 15 seconds between each try.

   When your engine has run about 10 seconds to warm up, your vehicle is ready to be driven. Don't "race" your engine when it's cold.

   If the weather is below freezing (32°F or 0°C), let the engine run for a few minutes to warm up.

3. If your engine still won't start (or starts but then stops), it could be flooded with too much gasoline. Try pushing your accelerator pedal all the way to the floor and holding it there as you hold the key in START for about three seconds. If the vehicle starts briefly but then stops again, do the same thing, but this time keep the pedal down for five or six seconds. This clears the extra gasoline from the engine.

***Notice:*** **Your engine is designed to work with the electronics in your vehicle. If you add electrical parts or accessories, you could change the way the engine operates. Before adding electrical equipment, check with your dealer. If you do not, your engine might not perform properly.**

## Racing or Other Competitive Driving

See your warranty book before using your vehicle for racing or other competitive driving.

***Notice:*** **If you use your vehicle for racing or other competitive driving, the engine may use more oil than it would with normal use. Low oil levels can damage the engine. Be sure to check the oil level often during racing or other competitive driving and keep the level at or near 1 quart (1 L) above the upper mark that shows the proper operating range on the engine oil dipstick. For information on how to add oil, see *Engine Oil on page 5-15*. After the competitive driving, remove excess oil so that the level on the dipstick is not above the upper mark that shows the proper operating range.**

## Engine Coolant Heater

If your vehicle has this feature, in very cold weather 0°F (–18°C) or colder, the engine coolant heater can help. You will get easier starting and better fuel economy during engine warm-up. Usually, the coolant heater should be plugged in a minimum of four hours prior to starting your vehicle. At temperatures above 32°F (0°C), use of the coolant heater is not required.

## To Use the Engine Coolant Heater

1. Turn off the engine.
2. Open the hood and unwrap the electrical cord.
3. Plug it into a normal, grounded 110-volt AC outlet.

**⚠ CAUTION:**

**Plugging the cord into an ungrounded outlet could cause an electrical shock. Also, the wrong kind of extension cord could overheat and cause a fire. You could be seriously injured. Plug the cord into a properly grounded three-prong 110-volt AC outlet. If the cord will not reach, use a heavy-duty three-prong extension cord rated for at least 15 amps.**

4. Before starting the engine, be sure to unplug and store the cord as it was before to keep it away from moving engine parts. If you do not, it could be damaged.

How long should you keep the coolant heater plugged in? The answer depends on the outside temperature, the kind of oil you have, and some other things. Instead of trying to list everything here, we ask that you contact your dealer in the area where you will be parking your vehicle. The dealer can give you the best advice for that particular area.

## Automatic Transaxle Operation

### Five-Speed Automatic and VTi Variable

If your vehicle is equipped with either the five-speed automatic transaxle or the VTi variable automatic transaxle, the shift lever is located on the console between the seats.

There are several different positions for the automatic transaxle.

**PARK (P):** This position locks your front wheels. It's the best position to use when you start your engine because your vehicle can't move easily.

**⚠ CAUTION:**

**It is dangerous to get out of your vehicle if the shift lever is not fully in PARK (P) with the parking brake firmly set. Your vehicle can roll.**

**Do not leave your vehicle when the engine is running unless you have to. If you have left**

**CAUTION: (Continued)**

**CAUTION: (Continued)**

**the engine running, the vehicle can move suddenly. You or others could be injured. To be sure your vehicle will not move, even when you are on fairly level ground, always set your parking brake and move the shift lever to PARK (P). See *Shifting Into Park (P) (Automatic Transaxle) on page 2-31*. If you are pulling a trailer, see *Towing a Trailer on page 4-39*.**

Ensure the shift lever is fully in PARK (P) before starting the engine. Your vehicle has an automatic transaxle shift lock control system. You have to fully apply your regular brakes before you can shift from PARK (P) when the ignition key is in RUN. If you cannot shift out of PARK (P), ease pressure on the shift lever – push the shift lever all the way into PARK (P) and also release the shift lever button as you maintain brake application. Then move the shift lever into the gear you wish. Press the shift lever button before moving the shift lever. See *Shifting Out of Park (P) (Automatic Transaxle) on page 2-33*.

For vehicles with the VTi variable transaxle, if the TRANS COLD message is displayed in cold temperatures (below –13°F (–25°C)) and the shift lever is moved out of PARK (P), the transaxle will not go into gear. Return the shift lever to PARK (P) and wait for the TRANS COLD message to turn off.

**REVERSE (R):** Use this gear to back up.

***Notice:*** **Shifting to REVERSE (R) while your vehicle is moving forward could damage the transaxle. The repairs would not be covered by your warranty. Shift to REVERSE (R) only after your vehicle is stopped.**

To rock your vehicle back and forth to get out of snow, ice or sand without damaging your transaxle, see *If You Are Stuck: In Sand, Mud, Ice or Snow on page 4-30*.

For vehicles with the VTi variable transaxle, if you accidentally shift into REVERSE (R) while the vehicle is moving forward or into DRIVE (D) while the vehicle is moving backward, the transaxle will remain in NEUTRAL (N) to protect itself.

**NEUTRAL (N):** In this position, your engine doesn't connect with the wheels. To restart when you're already moving, use NEUTRAL (N) only. Also, use NEUTRAL (N) when your vehicle is being towed.

## ⚠ CAUTION:

**Shifting into a drive gear while your engine is running at high speed is dangerous. Unless your foot is firmly on the brake pedal, your vehicle could move very rapidly. You could lose control and hit people or objects. Do not shift into a drive gear while your engine is running at high speed.**

***Notice:*** **Shifting out of PARK (P) or NEUTRAL (N) with the engine racing may damage the transaxle. The repairs would not be covered by your warranty. Be sure the engine is not racing when shifting your vehicle.**

***Notice:*** **Shifting to a drive gear from NEUTRAL (N) while the vehicle is moving could damage the transaxle. Make sure the vehicle is stopped before shifting from NEUTRAL (N) into a drive gear.**

**AUTOMATIC OVERDRIVE (D):** This position is for normal driving with the automatic transaxle. If you need more power for passing, and you're:

- Going less than about 35 mph (55 km/h), push your accelerator pedal about halfway down.
- Going about 35 mph (55 km/h), push your accelerator all the way down.

**INTERMEDIATE (I):** This position is also used for normal driving, however, it offers more power and lower fuel economy than AUTOMATIC OVERDRIVE (D). Here are some times you might choose INTERMEDIATE (I) instead of AUTOMATIC OVERDRIVE (D):

- When driving on hilly, winding roads.
- When going down a steep hill.

**LOW (L):** This position gives you more power but lower fuel economy. You can use LOW (L) on hills. It can help control your speed as you go down steep mountain roads, but then you would also want to use your brakes off and on.

***Notice:*** **Don't drive in LOW (L) for more than 25 miles (40 km), or at speeds over 55 mph (90 km/h), or you can damage your transaxle. Use DRIVE (D) or INTERMEDIATE (I) as much as possible. Don't shift into LOW (L) unless you are going slower than 65 mph (105 km/h) or you can damage your engine.**

***Notice:*** **Spinning the tires or holding the vehicle in one place on a hill using only the accelerator pedal may damage the transaxle. If you are stuck, do not spin the tires. When stopping on a hill, use the brakes to hold the vehicle in place.**

## Shift Lock Release

This vehicle is equipped with an electric shift lock release system. The shift lock release is designed to do the following:

- Prevent the ignition key from being removed unless the shift lever is in PARK (P), and
- Prevent movement of the shift lever out of PARK (P) unless the ignition is in a position other than LOCK. The shift lock release is always functional except in the case of a dead battery or low voltage (less than 9 V) battery.

The following procedure allows the ignition to be turned to LOCK and for ignition key removal in case of a dead battery or low voltage battery for vehicles equipped with a column shift lever.

1. Make sure the shift lever is in PARK (P).



2. Using a tool, pry off the cover from the bottom of the steering column.



3. Place your finger into the access hole and locate the plunger.
4. Press and hold the plunger toward the driver's door while turning the ignition key to LOCK. Remove the key.

Have your vehicle serviced at your retailer as soon as possible.

The following procedure is used to shift the transaxle out of PARK (P) in case of a dead battery or low voltage battery.

1. Turn the ignition to LOCK and remove the key.
2. Carefully pry the shift lock override cover from the floor shift console.



3. Insert the end of your ignition key into the slot and press down firmly.
4. Apply the brake and move the shift lever to NEUTRAL (N).
5. While maintaining brake application, start the vehicle and move the shift lever into the desired gear position.
6. Have the vehicle fixed as soon as possible.

# Manual Transaxle Operation

## Five-Speed

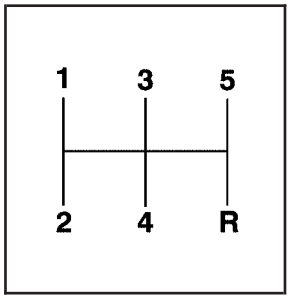


This is your shift pattern.

Here's how to operate your transaxle:

**FIRST (1):** Press the clutch pedal and shift into FIRST (1). Then, slowly let up on the clutch pedal as you press the accelerator pedal.

You can shift into FIRST (1) when you're going less than 20 mph (32 km/h). If you've come to a complete stop and it's hard to shift into FIRST (1), put the shift lever in NEUTRAL and let up on the clutch. Press the clutch pedal back down. Then shift into FIRST (1).

**SECOND (2):** Press the clutch pedal as you let up on the accelerator pedal and shift into SECOND (2). Then, slowly let up on the clutch pedal as you press the accelerator pedal.

**THIRD (3), FOURTH (4) and FIFTH (5):** Shift into THIRD (3), FOURTH (4) and FIFTH (5), the same way you do for SECOND (2). Slowly let up on the clutch pedal as you press the accelerator pedal.

To stop, let up on the accelerator pedal and press the brake pedal. Just before the vehicle stops, press the clutch pedal and the brake pedal, and shift to NEUTRAL.

**NEUTRAL:** Use this position when you start or idle your engine.

**REVERSE (R):** To back up, press down the clutch pedal, lift up the ring on the shift lever and shift into REVERSE (R). Let up on the clutch pedal slowly while pressing the accelerator pedal.

***Notice:*** **Shifting to REVERSE (R) while your vehicle is moving forward could damage the transaxle. The repairs would not be covered by your warranty. Shift to REVERSE (R) only after your vehicle is stopped.**

Also, use REVERSE (R), along with the parking brake, for parking your vehicle.

## Shift Speeds

**⚠ CAUTION:**

**If you skip a gear when you downshift, you could lose control of your vehicle. You could injure yourself or others. Don't shift down more than one gear at a time when you downshift.**

## Up-Shift Light

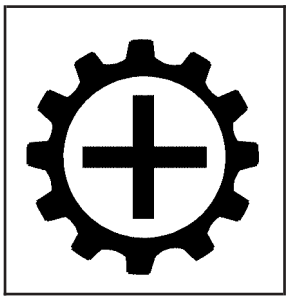

**United States Only**

If you have a manual transaxle, you may have an up-shift light. This light will show you when to shift to the next higher gear for the best fuel economy.

When this light comes on, you can shift to the next higher gear if weather, road and traffic conditions let you. For the best fuel economy, accelerate slowly and shift when the light comes on.

While you accelerate, it is normal for the light to go on and off if you quickly change the position of the accelerator. Ignore the light when you downshift.

***Notice:*** **If you skip more than one gear when you downshift, or if you race the engine when you release the clutch pedal while downshifting, you could damage the engine, clutch, driveshaft or the transmission. Do not skip gears or race the engine when downshifting.**

## Parking Brake



The parking brake lever is located between the seats.

To set the parking brake, hold the brake pedal down and pull up on the parking brake lever. If the ignition is on, the brake system warning light will come on.

To release the parking brake, hold the brake pedal down. Pull the parking brake lever up until you can press the release button. Hold the release button in as you move the brake lever all the way down.

Make sure to release the parking brake before driving the vehicle.

***Notice:*** **Driving with the parking brake on can overheat the brake system and cause premature wear or damage to brake system parts. Verify that the parking brake is fully released and the brake warning light is off before driving.**

## Shifting Into Park (P) (Automatic Transaxle)

**⚠ CAUTION:**

**It can be dangerous to get out of your vehicle if the shift lever is not fully in PARK (P) with the parking brake firmly set. Your vehicle can roll. If you have left the engine running, the vehicle can move suddenly. You or others could be injured. To be sure your vehicle will not move, even when you are on fairly level ground, use the steps that follow. If you are pulling a trailer, see *Towing a Trailer on page 4-39*.**

1. Hold the brake pedal down and set the parking brake.
2. Move the shift lever into the PARK (P) position like this:
   - Hold in the button on the shift lever.



   - Push the lever all the way toward the front of your vehicle.
3. Turn the ignition key to LOCK.
4. Remove the key and take it with you. If you can leave your vehicle with the ignition key in your hand, your vehicle is in PARK (P).

## Leaving Your Vehicle With the Engine Running

**⚠ CAUTION:**

**It can be dangerous to leave your vehicle with the engine running. Your vehicle could move suddenly if the shift lever is not fully in PARK (P) with the parking brake firmly set. And, if you leave the vehicle with the engine running, it could overheat and even catch fire. You or others could be injured. Do not leave your vehicle with the engine running.**

If you have to leave your vehicle with the engine running, be sure your vehicle is in PARK (P) and your parking brake is firmly set before you leave it. After you've moved the shift lever into PARK (P), hold the regular brake pedal down. Then, see if you can move the shift lever away from PARK (P) without first pushing the button. If you can, it means that the shift lever wasn't fully locked into PARK (P).

## Torque Lock

If you are parking on a hill and you don't shift your transaxle into PARK (P) properly, the weight of the vehicle may put too much force on the parking pawl in the transaxle. You may find it difficult to pull the shift lever out of PARK (P). This is called "torque lock." To prevent torque lock, set the parking brake and then shift into PARK (P) properly before you leave the driver's seat. To find out how, see *Shifting Into Park (P) (Automatic Transaxle) on page 2-31*.

When you are ready to drive, move the shift lever out of PARK (P) *before* you release the parking brake.

If torque lock does occur, you may need to have another vehicle push yours a little uphill to take some of the pressure from the parking pawl in the transaxle, so you can pull the shift lever out of PARK (P).

## Shifting Out of Park (P) (Automatic Transaxle)

Your vehicle has an automatic transaxle shift lock control system. You have to fully apply your regular brakes before you can shift from PARK (P) when the ignition is in RUN. See *Automatic Transaxle Operation on page 2-23*.

If you cannot shift out of PARK (P), ease pressure on the shift lever — push the shift lever all the way into PARK (P), as you maintain brake application. Then move the shift lever into the gear you wish. (Press the shift lever button before moving the shift lever).

If you ever hold the brake pedal down but still can't shift out of PARK (P), try this:

1. Turn the key to LOCK.
2. Apply and hold the brake until the end of Step 4.
3. Shift to NEUTRAL (N).
4. Start the vehicle and then shift to the drive gear you want.
5. Have your vehicle fixed as soon as you can.

## Parking Your Vehicle (Manual Transaxle)

Before leaving your vehicle, fully press the clutch pedal in, move the shift lever into REVERSE (R), and firmly apply the parking brake. Once the shift lever has been placed in REVERSE (R) with the clutch pedal pressed in, you can turn the ignition key to LOCK, remove the key and release the clutch.

See *Manual Transaxle Operation on page 2-28*.

## Parking Over Things That Burn



**⚠ CAUTION:**

**Things that can burn could touch hot exhaust parts under your vehicle and ignite. Do not park over papers, leaves, dry grass or other things that can burn.**

## Engine Exhaust

**⚠ CAUTION:**

**Engine exhaust can kill. It contains the gas carbon monoxide (CO), which you can not see or smell. It can cause unconsciousness and death.**

**You might have exhaust coming in if:**

- **Your exhaust system sounds strange or different.**
- **Your vehicle gets rusty underneath.**
- **Your vehicle was damaged in a collision.**
- **Your vehicle was damaged when driving over high points on the road or over road debris.**
- **Repairs were not done correctly.**
- **Your vehicle or exhaust system had been modified improperly.**

**If you ever suspect exhaust is coming into your vehicle:**

- **Drive it only with all the windows down to blow out any CO; and**
- **Have your vehicle fixed immediately.**

## Running Your Engine While You Are Parked

It is better not to park with the engine running. But if you ever have to, here are some things to know.

**⚠ CAUTION:**

**Idling the engine with the climate control system off could allow dangerous exhaust into your vehicle. See the earlier Caution under *Engine Exhaust on page 2-34*.**

**Also, idling in a closed-in place can let deadly carbon monoxide (CO) into your vehicle even if the climate control fan is at the highest setting. One place this can happen is a garage. Exhaust — with CO — can come in easily. NEVER park in a garage with the engine running.**

**Another closed-in place can be a blizzard. See *Winter Driving on page 4-26*.**

**⚠ CAUTION:**

**It can be dangerous to get out of your vehicle if the shift lever is not fully in PARK (P) with the parking brake firmly set. Your vehicle can roll. Do not leave your vehicle when the engine is running unless you have to. If you have left the engine running, the vehicle can move suddenly. You or others could be injured. To be sure your vehicle will not move, even when you are on fairly level ground, always set your parking brake and move the shift lever to PARK (P).**

Follow the proper steps to be sure your vehicle will not move. See *Shifting Into Park (P) (Automatic Transaxle) on page 2-31*.

If you are parking on a hill and if you are pulling a trailer, also see *Towing a Trailer on page 4-39*.

# Mirrors

## Manual Rearview Mirror

When you are sitting in a comfortable driving position, adjust the mirror so you can see clearly behind your vehicle. Grip the mirror in the center to move it up or down and side to side. The day/night adjustment allows you to adjust the mirror to avoid glare from the lamps behind you. Pull the tab forward for daytime use; push it back for night use.

## Manual Rearview Mirror with OnStar®

If your vehicle has this feature, this mirror has a lever located at the bottom of the mirror. It is used to change the mirror from day to night position. To reduce glare from headlamps behind you while driving at night, pull the lever toward you. To return the mirror to the day position, return the lever to its original position.



There are also three OnStar® buttons located at the bottom of the mirror face. See your retailer for more information on the system and how to subscribe to OnStar®. See *OnStar® System on page 2-43* for more information about the services OnStar® provides.

## Automatic Dimming Rearview Mirror with OnStar®, Compass and Temperature Display

Your vehicle may have this feature. When on, an automatic dimming mirror automatically dims to the proper level to minimize glare from lights behind you after dark.



The mirror also includes a dual display in the upper right corner of the mirror face. The compass reading and the outside temperature will both appear in the display at the same time.

**(On/Off):** This is the on/off button.

## Temperature and Compass Display

Press the on/off button, located to the far left, briefly to turn the comp/temp display on or off.

If the display reads CAL, you will need to calibrate the compass. For more information on calibration, see below.

To adjust between Fahrenheit and Celsius do the following:

1. Press and hold the on/off button for approximately four seconds until either a flashing °F, or °C appears.
2. Press the button again to change the display to the desired unit of measurement. After approximately four seconds of inactivity, the new unit will be locked in and the compass/temperature display will return.

## Automatic Dimming Mirror Operation

The automatic dimming mirror function is turned on automatically each time the ignition is started. To operate the automatic dimming mirror do the following:

1. Make sure the green indicator light, located to the left of the on/off button, is lit. If it's not, press and hold the on/off button for approximately six seconds until the green light comes on, indicating that the mirror is in automatic dimming mode.
2. Turn off the automatic dimming mirror function by pressing and holding the on/off button for approximately six seconds until the green indicator light turns off.

## Compass Calibration

The compass may need calibration from time to time.

In order to calibrate, CAL must be displayed in the mirror compass windows. If CAL is not displayed, push in the on/off button for approximately nine seconds or until CAL is displayed.

The compass can be calibrated by driving the vehicle in circles at five mph (8 km/h) or less until the display reads a direction.

## Compass Variance

The mirror is set in zone eight upon leaving the factory. It will be necessary to adjust the compass to compensate for compass variance if you live outside of zone eight. Under certain circumstances, as during a long distance cross-country trip, it will be necessary to adjust for compass variance. Compass variance is the difference between earth's magnetic north and true geographic north. If not adjusted to account for compass variance, your compass could give false readings.

To adjust for compass variance do the following:

1. Find your current location and variance zone number on the following zone map.

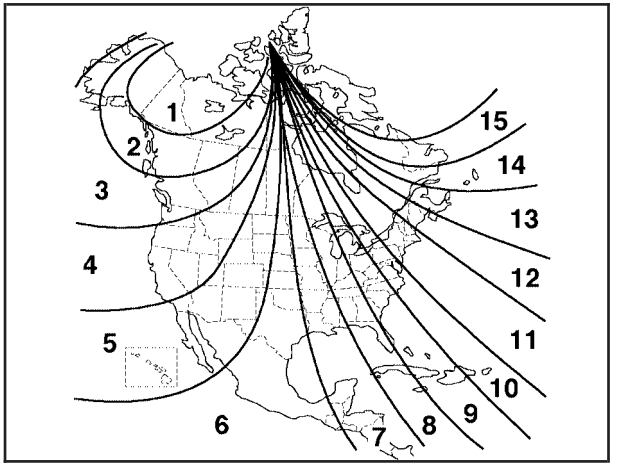


2. Press and hold the on/off button until a zone number appears in the display. The compass is now in zone mode.
3. Keep pressing the on/off button until the desired zone number appears in the display. Release the button. After approximately four seconds of inactivity, the new zone number will be locked in and the comp/temp display will return.

## Cleaning the Mirror

When cleaning the mirror, use a paper towel or similar material dampened with glass cleaner. Do not spray glass cleaner directly on the mirror as that may cause the liquid cleaner to enter the mirror housing.

# Automatic Dimming Rearview Mirror with Compass and Temperature Display

If your vehicle is equipped with an automatic dimming mirror it will automatically dim to the proper level to minimize glare from lights behind you after dark.

The mirror also includes a display in the upper right corner of the mirror face. The compass reading and the outside temperature will both appear in the display at the same time.

## Temperature Display

The temperature can be displayed by pressing the TEMP button. Pressing the TEMP button once briefly, will toggle the temperature reading from Fahrenheit (°F), Celsius (°C), to off.

## Automatic Dimming Mirror Operation

Press the COMP button to turn the automatic dimming feature on and off. An indicator light on the bottom of the mirror face will be on when the automatic dimming feature is on.

## Compass Operation

Press the COMP button once briefly to turn the compass on or off.

When compass feature is on, the compass will show the direction the vehicle is traveling, with a maximum of two characters.

## Compass Calibration

The compass may need calibration from time to time.

In order to calibrate, CAL must be displayed in the mirror compass windows. If CAL is not displayed, push in the COMP button for approximately six seconds or until CAL is displayed.

The compass can be calibrated by driving the vehicle in circles at five mph (8 km/h) or less until the display reads a direction.

## Compass Variance

The mirror is set in zone eight upon leaving the factory. It will be necessary to adjust the compass to compensate for compass variance if you live outside zone eight. Under certain circumstances, as during a long distance cross-country trip, it will be necessary to adjust for compass variance. Compass variance is the difference between earth's magnetic north and true geographic north. If not adjusted to account for compass variance, your compass could give false readings.

To adjust for compass variance:

1. Find your current location and variance zone number on the following zone map.

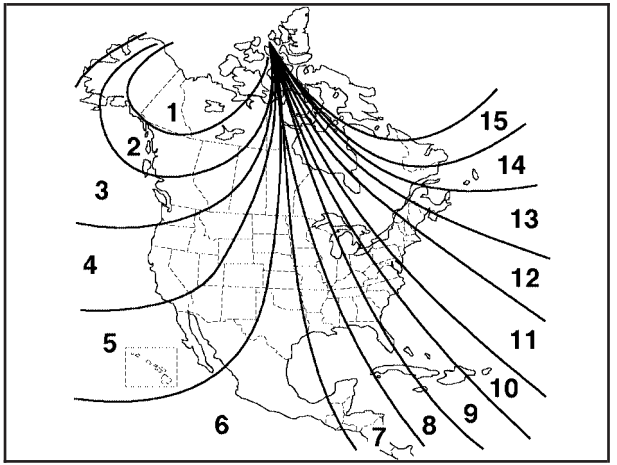


2. Press and hold the COMP button for five seconds until a zone number appears in the display.
3. Press the COMP button on the bottom of the mirror until the new zone number appears in the display. After you stop pressing the button, the display will show a compass direction within a few seconds.

## Cleaning the Mirror

Use a paper towel or similar material dampened with glass cleaner. Do not spray glass cleaner directly on the mirror as that may cause the liquid cleaner to enter the mirror housing.

## Outside Remote Control Mirror

The outside rearview mirror should be adjusted so you can see a little of the side of your vehicle when you are sitting in a comfortable driving position.

Adjust the driver's outside mirror with the knob on the driver's door.

To adjust your passenger's outside mirror, sit in the driver's seat and have a passenger adjust the mirror for you.

## Outside Power Mirrors



The controls are located on the driver's door armrest.

Move the selector switch to the left or right to choose the mirror you want to adjust; then press the dots located on the four-way control pad to adjust the mirror.

## Outside Convex Mirror

Your passenger's side mirror is convex. A convex mirror's surface is curved so you can see more from the driver's seat.

**⚠ CAUTION:**

**A convex mirror can make things (like other vehicles) look farther away than they really are. If you cut too sharply into the right lane, you could hit a vehicle on your right. Check your inside mirror or glance over your shoulder before changing lanes.**

# OnStar® System



Your vehicle may have this feature. OnStar® uses global positioning system (GPS) satellite technology, wireless communications, and state of the art call centers to provide you with a wide range of safety, security, information and convenience services.

A complete OnStar® user's guide and the terms and conditions of the OnStar® Subscription Service Agreement are included in your OnStar®-equipped vehicle's glove box literature. For more information, visit www.onstar.com, contact OnStar® at 1-888-4-ONSTAR (1-888-466-7827), or press the blue OnStar® button to speak to an OnStar® advisor 24 hours a day, 7 days a week.

A completed Subscription Service Agreement is required prior to delivery of OnStar® services and prepaid calling minutes are also required for OnStar® Personal Calling and OnStar® Virtual Advisor use. Terms and conditions of the Subscription Service Agreement can be found at www.onstar.com.

## OnStar® Services

One of the following plans is normally included for a specific duration with each vehicle equipped with OnStar®. You can upgrade or extend your OnStar® service plan to meet your needs.

### Safe and Sound Plan

- Automatic Notification of Air Bag Deployment
- Emergency Services
- Roadside Assistance
- Stolen Vehicle Assistance
- AccidentAssist
- Remote Door Unlock
- Remote Diagnostics
- Online Concierge

### Directions and Connections Plan

- All Safe and Sound Plan services
- Route Support
- RideAssist
- Information and Convenience Services

### Luxury and Leisure Plan

- All Directions and Connections Plan services
- Personal Concierge

## OnStar® Personal Calling

With OnStar® Personal Calling, you have a safer way to stay connected while driving. It's a hands-free wireless phone that's integrated into your vehicle. You can place calls nationwide using voice-activated dialing with no contracts and no additional roaming charges. To find out more about OnStar® Personal Calling, refer to the OnStar® owner's guide in your vehicle's glove box, or call OnStar® at 1-888-4-ONSTAR (1-888-466-7827).

## OnStar® Virtual Advisor

With OnStar® Virtual Advisor you can listen to your favorite news, entertainment and information topics, such as traffic and weather reports, stock quotes and sports scores. You listen to your e-mail through your vehicle's speakers, and reply with your hands on the wheel and your eyes on the road.

# Storage Areas

## Glove Box

Use the key to lock and unlock the glove box. To open, lift the latch.

## Cupholder(s)

If you have a coupe, there are cupholders built into the console between the rear seats.

## Center Console Storage Area

Your vehicle has a center console storage area between the front seats. It contains a storage area for small items.

The center console storage area can be used as an armrest. Push the lid of the center console forward for additional arm support.

## Roof Rack System

If your vehicle has a roof rack, you can load things on top of your vehicle.

***Notice:*** **Loading cargo on the luggage carrier that weighs more than 100 lbs. (45 kg) or hangs over the rear or sides of the vehicle may damage your vehicle. Load cargo so that it rests on the slats as far forward as possible and against the side rails, making sure to fasten it securely.**

Don't exceed the maximum vehicle capacity when loading your vehicle. See *Loading Your Vehicle on page 4-33* for more information.

To prevent damage or loss of cargo as you are driving, check now and then to make sure the roof rack and cargo are securely fastened.

## Convenience Net

If you have a convenience net, the net attaches to the floor of the trunk. Put small loads behind the net.

The net is not for heavier loads. Store them as far forward in the trunk as you can.

See your retailer for information on obtaining a convenience net.

# Sunroof



Your vehicle may have a sunroof. With the ignition on, press and hold the OPEN/VENT part of the switch and the glass panel will open to the vent position.

Press and hold the OPEN/VENT part of the switch again to open the glass panel.

Press and hold the CLOSE part of the switch to close the glass panel. The sunshade can only be closed by hand.

## NOTES

# Section 3 Instrument Panel


**Instrument Panel Overview** .....3-4
- Hazard Warning Flashers .....3-6
- Other Warning Devices .....3-7
- Horn .....3-7
- Tilt Wheel .....3-7
- Turn Signal/Multifunction Lever .....3-8
- Windshield Wiper Lever .....3-11
- Cruise Control .....3-12
- Exterior Lamps .....3-15
- Interior Lamps .....3-17
- Accessory Power Outlets .....3-18
- Ashtrays and Cigarette Lighter .....3-19

**Climate Controls** .....3-20
- Climate Control System (Without Air Conditioning) .....3-20
- Climate Control System (With Air Conditioning) .....3-22
- Outlet Adjustment .....3-24
- Passenger Compartment Air Filter .....3-25

**Warning Lights, Gages, and Indicators** .....3-27
- Instrument Panel Cluster .....3-28
- Speedometer and Odometer .....3-29
- Tachometer .....3-29
- Safety Belt Reminder Light .....3-30
- Air Bag Readiness Light .....3-30
- Battery Warning Light .....3-31
- Up-Shift Light .....3-32
- Brake System Warning Light .....3-32
- Anti-Lock Brake System Warning Light .....3-34
- Engine Coolant Temperature Gage .....3-35
- Malfunction Indicator Lamp .....3-36
- Oil Pressure Light .....3-39
- Passlock® Warning Light .....3-40
- Fuel Gage .....3-40

# Section 3 Instrument Panel


**Message Center** .....3-41
- Low Traction Message .....3-42
- Traction Off Message .....3-42
- Cruise Control Message .....3-42
- Transaxle Fluid Hot Message .....3-42
- Transaxle Fluid Cold Message .....3-43
- Low Coolant Level Warning Message .....3-43
- Change Engine Oil Message .....3-43
- Check Gage Message .....3-44
- Power Steering Message .....3-44
- Trunk Ajar Warning Message .....3-44
- Low Fuel Warning Message .....3-45
- Service Vehicle Message .....3-45
- Error Message .....3-45

**Audio System(s)** .....3-46
- Setting the Time for Radios without Radio Data Systems (RDS) .....3-46
- Setting the Time for Radios with Radio Data Systems (RDS) .....3-47
- AM-FM Radio .....3-47
- Radio with CD (Base Level) .....3-50
- Radio with CD (MP3) .....3-54
- Theft-Deterrent Feature .....3-68
- Radio Reception .....3-70
- Care of Your CDs .....3-71
- Care of Your CD Player .....3-71
- Fixed Mast Antenna .....3-71
- XM™ Satellite Radio Antenna System .....3-71

## NOTES

# Instrument Panel Overview

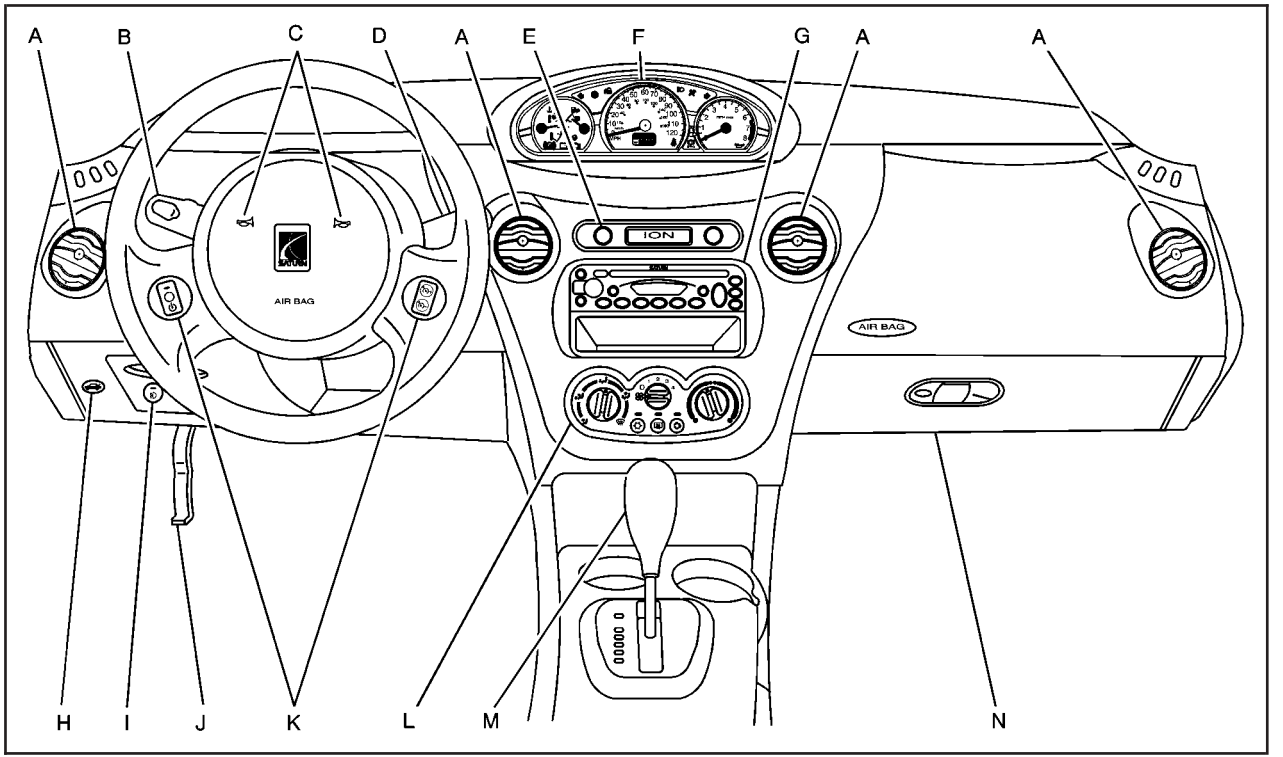

The main components of the instrument panel are the following:

A. Air Outlets. See *Outlet Adjustment on page 3-24* Outlet Adjustment.

B. Turn Signal/Multifunction Lever. See *Turn Signal/Multifunction Lever on page 3-8* Turn Signal/Multifunction Lever.

C. Horn. See *Horn on page 3-7*.

D. Windshield Wiper Lever. See *Windshield Wiper Lever on page 3-11* Turn Signal/Multifunction Lever.

E. Hazard Warning Flasher Button. See *Hazard Warning Flashers on page 3-6* Hazard Warning Flashers.

F. Instrument Panel Cluster. See *Instrument Panel Cluster on page 3-28* Instrument Panel Cluster.

G. Audio System. See *Audio System(s) on page 3-46* Audio System(s).

H. Trunk Release Button. See *Trunk on page 2-12*.

I. Fog Lamp (If Equipped)/Dimmer Switch. See *Interior Lamps on page 3-17* for both.

J. Hood Release. See *Hood Release on page 5-10*.

K. Cruise Control Switches. See *Cruise Control on page 3-12*.

L. Climate Control System. See *Climate Control System (Without Air Conditioning) on page 3-20* or *Climate Control System (With Air Conditioning) on page 3-22* Climate Control System.

M. Transaxle Shift Lever. See *Automatic Transaxle Operation on page 2-23* Automatic Transaxle Operation or *Manual Transaxle Operation on page 2-28* Manual Transaxle Operation.

N. Glove Box. See *Glove Box on page 2-44*.

## Hazard Warning Flashers

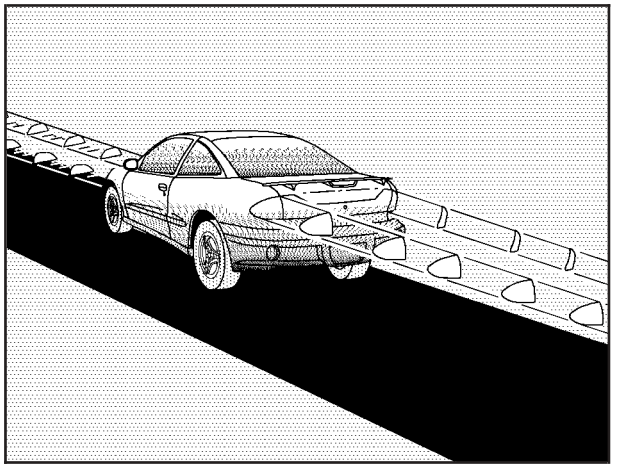

Your hazard warning flashers let you warn others. They also let police know you have a problem. Your front and rear turn signal lamps will flash on and off.

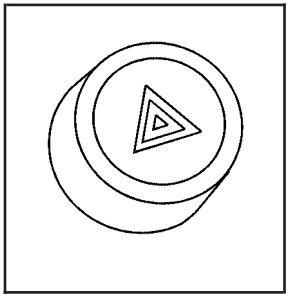

The hazard warning flasher button is located near the center of the instrument panel.

Your hazard warning flashers work no matter what position your key is in, and even if the key isn't in.

Press the button to make the front and rear turn signal lamps flash on and off. Press the button again to turn the flashers off.

When the hazard warning flashers are on, your turn signals won't work. Make sure the hazard warning flasher switch is all the way to the left for normal turn signal operation.

## Other Warning Devices

If you carry reflective triangles, you can set one up at the side of the road about 300 feet (100 m) behind your vehicle.

## Horn

You can sound the horn by pressing the center of your steering wheel.

## Tilt Wheel

Your vehicle may have a tilt wheel which allows you to adjust the steering wheel before you drive. You can raise it to the highest level to give your legs more room when you exit and enter the vehicle.

The lever that allows you to tilt the steering wheel is located on the left side of the steering column.



To tilt the wheel, hold the wheel and push the lever down. Then, move the wheel to a comfortable position and raise the lever to lock the wheel in place.

## Turn Signal/Multifunction Lever




The lever on the left side of the steering column includes the following:

- Turn and Lane-Change Signals
- Headlamps
- Headlamp High/Low-Beam Changer
- Flash-to-Pass Feature

For additional information on the exterior lamps, see *Exterior Lamps on page 3-15*.

## Turn and Lane-Change Signals

The turn signal has two upward (for right) and two downward (for left) positions. These positions allow you to signal a turn or a lane change.

To signal a turn, move the lever all the way up or down. When the turn is finished, the lever will return automatically.

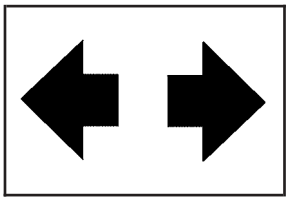

An arrow on the instrument panel cluster will flash in the direction of the turn or lane change.

To signal a lane change, just raise or lower the lever until the arrow starts to flash. Hold it there until you complete your lane change. The lever will return by itself when you release it.

As you signal a turn or a lane change, if the arrows flash rapidly, a signal bulb may be burned out and other drivers won't see your turn signal.

If a bulb is burned out, replace it to help avoid an accident. If the arrows don't go on at all when you signal a turn, check the fuse, see *Fuses and Circuit Breakers on page 5-95* and for burned-out bulbs.

## Turn Signal On Chime

If the turn signal is left on for about 1 mile (1.6 km), a chime will sound to let you know you left the turn signal on.

## Headlamp High/Low-Beam Changer

To change the headlamps from low beam to high or high beam to low, push the turn signal lever away from you. Then release it.

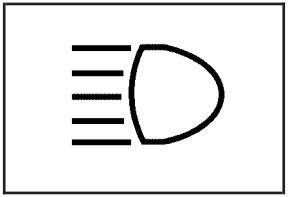

When the high beams are on, this light on the instrument panel cluster will also be on.

## Flash-to-Pass

This feature lets you use your high-beam headlamps to signal a driver in front of you that you want to pass.

To use it, pull the turn signal/multifunction lever toward you until the high-beam headlamps come on, then release the lever to turn them off.

## Headlamps

The exterior lamp control is located in the middle of the turn signal/multifunction lever.

**(Exterior Lamp Control):** Turn the control with this symbol on it to operate the exterior lamps.

The exterior lamp control has the following four positions:

**(Off):** Turning the control to this position turns off all lamps except the Daytime Running Lamps (DRL). On some vehicles, this position activates the automatic headlamp system.

**AUTO (Automatic):** If your turn signal lever has this position, turning the control to this position puts the headlamps in automatic mode. AUTO mode will turn the exterior lamps on and off depending upon how much light is available outside of the vehicle.

**(Parking Lamps):** Turning the control to this position turns on the parking lamps together with the following:

- Sidemarker Lamps
- Taillamps
- License Plate Lamps
- Instrument Panel Lights

**(Headlamps):** Turning the control to this position turns on the headlamps, together with the previously listed lamps and lights.

## Lamps On Reminder

If you open the driver's door with the ignition off and the lamps on, you will hear a warning chime.

## Windshield Wiper Lever



The lever on the right side of the steering column operates the windshield wipers.

**(Mist):** Pull the lever down and release it for a single wiping cycle. The lever will return to its original position. For more cycles, hold the lever down before releasing it.

**(Off):** Put the lever in this position to turn off the wipers.

**(Delay):** Put the lever in this position to set a delay between wipes. Turn the end of the lever to set the length of the delay.

**(Low Speed):** Put the lever in this position for slow, steady wiping cycles.

**(High Speed):** Put the lever in this position for rapid wiping cycles.

Be sure to clear ice and snow from the wiper blades before using them. If they're frozen to the windshield, gently loosen or thaw them. If the blades do become damaged, install new blades or blade inserts.

Heavy snow or ice can overload the wiper motor. A circuit breaker will stop the motor until it cools down. Clear away snow or ice to prevent an overload.

## Windshield Washer

**⚠ CAUTION:**

**In freezing weather, do not use your washer until the windshield is warmed. Otherwise the washer fluid can form ice on the windshield, blocking your vision.**

**(Washer Fluid):** Pull the windshield wiper lever toward you to operate the windshield wipers. Washer fluid will squirt onto the windshield and the wipers will run for a few cycles to clear the windshield. For more wash cycles, pull the lever toward you and hold it there.

## Cruise Control





The buttons for the cruise control are located on the steering wheel.

**(On/Off):** This button turns the system on and off.

**+ (Resume/Accelerate):** Push this button to make the vehicle resume a previously set speed or to accelerate when cruise is already active.

– **(Set/Coast):** Press this button to set the speed or to decrease the speed when cruise is already active.

With cruise control, you can maintain a speed of about 25 mph (40 km/h) or more without keeping your foot on the accelerator. This can really help on long trips. Cruise control does not work at speeds below about 25 mph (40 km/h).

If you apply your brakes or the clutch, the cruise control will shut off.

**⚠ CAUTION:**

**Cruise control can be dangerous where you can not drive safely at a steady speed. So, do not use your cruise control on winding roads or in heavy traffic.**

**Cruise control can be dangerous on slippery roads. On such roads, fast changes in tire traction can cause needless wheel spinning, and you could lose control. Do not use cruise control on slippery roads.**

If your vehicle is in cruise control when the traction control system begins to limit wheel spin, the cruise control will automatically disengage. See *Traction Control System (TCS) on page 4-8*. When road conditions allow you to safely use it again, you may turn the cruise control back on.

## Setting Cruise Control

**⚠ CAUTION:**

**If you leave your cruise control on when you are not using cruise, you might hit a button and go into cruise when you do not want to. You could be startled and even lose control. Keep the cruise control switch off until you want to use cruise control.**

1. Press the cruise control on/off button.
2. Get up to the speed you want.
3. Press the set/coast button.
4. Take your foot off the accelerator pedal.

## Resuming a Set Speed

Suppose you set your cruise control at a desired speed and then you apply the brake. This, of course, disengages the cruise control. But you don't need to reset it.

Once you're going about 25 mph (40 km/h) or more, you can press the cruise control resume/accelerate button.

You'll go right back up to your chosen speed and stay there.

If you hold the resume/accelerate button the vehicle will keep going faster until you release the button or apply the brake. So unless you want to go faster, don't hold the resume/accelerate button.

## Increasing Speed While Using Cruise Control

There are two ways to go to a higher speed:

- Use the accelerator pedal to get to the higher speed. Press the set/coast button, then release the button and the accelerator pedal. You'll now cruise at the higher speed.
- Press the resume/accelerate button. Hold it there until you get up to the speed you want, and then release the button. To increase your speed in very small amounts, press the button briefly. Each time you do this, your vehicle will go about 1 mph (1.6 km/h) faster.

## Reducing Speed While Using Cruise Control

There are two ways to reduce your speed while using cruise control:

- Press set/coast button until you reach the lower speed you want, then release it.
- To slow down in very small amounts, briefly press the set/coast button. Each time you do this, you'll go about 1 mph (1.6 km/h) slower.

## Passing Another Vehicle While Using Cruise Control

Use the accelerator pedal to increase your speed. When you take your foot off the pedal, your vehicle will slow down to the cruise control speed you set earlier.

### Using Cruise Control on Hills

How well your cruise control will work on hills depends upon your speed, load and the steepness of the hills. When going up steep hills, you may have to step on the accelerator pedal to maintain your speed. When going downhill, you may have to brake or shift to a lower gear to keep your speed down. Applying the brake or shifting into a lower gear will take you out of cruise control. If you need to apply the brake or shift to a lower gear due to the grade of the downhill slope, you may not want to attempt to use your cruise control feature.

### Ending Cruise Control

To end a cruise control session, step lightly on the brake pedal. If your vehicle has a manual transmission, lightly tapping the clutch will end a cruise control session also.

Stepping on the brake or clutch pedal will end the current cruise control session only. Press the cruise control on/off button to turn off the system completely.

### Erasing Speed Memory

When you turn off the cruise control or the ignition, your cruise control set speed memory is erased.

## Exterior Lamps

### Headlamps

See *Turn Signal/Multifunction Lever on page 3-8* for more information on the headlamps.

### Daytime Running Lamps

Daytime Running Lamps (DRL) can make it easier for others to see the front of your vehicle during the day. DRL can be helpful in many different driving conditions, but they can be especially helpful in the short periods after dawn and before sunset. Fully functional daytime running lamps are required on all vehicles first sold in Canada.

The DRL system will make your low-beam headlamps come on at a reduced brightness in daylight when the following conditions are met:

- The ignition is on,
- the exterior lamp band is in the off or AUTO position, and
- the transaxle is not in PARK (P) on models with an automatic transaxle only.

When the DRL are on, your low-beam headlamps will be on at a reduced brightness. The taillamps, sidemarker and other lamps won't be on. Your instrument panel won't be lit up either.

When you turn the exterior lamp band to the headlamp position, your low-beam headlamps will come on. The other lamps that come on with your headlamps will also come on.

When you turn off the headlamps, the regular lamps will go off, and your low-beam headlamps will come on to the reduced brightness.

To idle your vehicle with the DRL off, move the shift lever to PARK (P). The DRL will stay off until you move the shift lever out of PARK (P). To override the DRL on manual transaxle vehicles, you must set the parking brake while the ignition is off and then start your vehicle. The DRL will stay off until you release the parking brake.

As with any vehicle, you should turn on the regular headlamp system when you need it.

## Automatic Headlamp System

If you have the automatic headlamps system, the headlamps will come on automatically when it is dark enough.



Your vehicle has a light sensor located on top of the instrument panel. Make sure it is not covered, or the headlamps will be on when you don't need them.

The system may also turn on the headlamps when driving through a parking garage or tunnel.

## Fog Lamps

If your vehicle has this feature, use your fog lamps for better visibility in foggy or misty conditions.



The button for your fog lamps is located next to the instrument panel brightness control.

Push the button to turn the fog lamps on. Push the button again to turn the fog lamps off.

When using fog lamps, the parking lamps or low-beam headlamps must be on.

A light on the button will come on when the fog lamps are actually on. Fog lamps will go off whenever the high-beam headlamps come on. When the high-beam headlamps go off, the fog lamps will come on again.

Continuous use of the fog lamps will shorten bulb life. Limit use as necessary.

# Interior Lamps

## Instrument Panel Brightness

This feature controls the brightness of the instrument panel lights.



The thumbwheel for this feature is located on the instrument panel to the left of the steering column.

Turn the thumbwheel to the right to brighten the lights or to the left to dim them.

## Entry Lighting

If the dome lamp is in the DOOR position, the lamps inside your vehicle will come on when any door is opened. In addition, the light will come on when the remote keyless entry unlock button is pressed. It will stay on for 20 seconds or until a door is opened. After the door is opened the light will remain on and stay on for 20 seconds after the doors are closed, or until you put the key in the ignition and turn the key to RUN. The light will then gradually dim until it is no longer lit.

## Dome Lamp

The dome lamp switch has three positions.

**ON:** The lamp will stay on as long as the switch is in this position.

**DOOR:** The lamp will come on when a door is opened. See “Entry Lighting” for more information.

**OFF:** The lamp will not come on as long as the switch is in this position.

## Map Lamps

These lamps are located on the headliner above the rearview mirror. To turn the lamps on, press the lens. Press the lens again to turn them off.

## Battery Run-Down Protection

Your vehicle is equipped with a battery saver feature designed to protect your vehicle’s battery.

When any interior lamp is left on and the ignition is turned off, the battery rundown protection system will automatically turn the lamp off after 20 minutes. This will avoid draining the battery.

# Accessory Power Outlets

The accessory power outlets can be used to connect electrical equipment such as a cellular phone or CB radio.

The accessory power outlets are located in the front and rear of the center console.

To use the outlet, remove the cover. When not in use, always cover the outlet with the protective cap.

***Notice:*** **Leaving electrical equipment on for extended periods will drain the battery. Always turn off electrical equipment when not in use and do not plug in equipment that exceeds the maximum amperage rating.**

Certain electrical accessories may not be compatible with the accessory power outlet and could result in blown vehicle or adapter fuses. If you experience a problem, see your dealer for additional information on the accessory power outlet.

***Notice:*** **Adding any electrical equipment to your vehicle may damage it or keep other components from working as they should. The repairs would not be covered by your warranty. Check with your dealer before adding electrical equipment.**

When adding electrical equipment, be sure to follow the installation instructions included with the equipment.

***Notice:*** **Improper use of the power outlet can cause damage not covered by your warranty. Do not hang any type of accessory or accessory bracket from the plug because the power outlets are designed for accessory power plugs only.**

## Ashtrays and Cigarette Lighter

Your vehicle may have an ashtray and cigarette lighter. To use the lighter, just push it in all the way and let go. When it's ready, it will pop back out by itself.

***Notice:*** **Holding a cigarette lighter in while it is heating will not allow the lighter to back away from the heating element when it is hot. Damage from overheating may occur to the lighter or heating element, or a fuse could be blown. Do not hold a cigarette lighter in while it is heating.**

To remove the ashtray, lift it straight up. To reinstall it, press the ashtray down firmly until it is fully seated.

***Notice:*** **If you put papers or other flammable items in the ashtray, hot cigarettes or other smoking materials could ignite them and possibly damage your vehicle. Never put flammable items in the ashtray.**

# Climate Controls

## Climate Control System (Without Air Conditioning)

With this system you can control the heating and ventilation for your vehicle.



### Operation

To change the current mode, select one of the following:

**(Vent):** This mode directs air to the instrument panel outlets.

**(Bi-Level):** This mode directs approximately half of the air to the instrument panel outlets, and then directs the remaining air to the floor outlets. Cooler air is directed to the upper outlets and warmer air to the floor outlets.

**(Floor):** This mode directs most of the air to the floor outlets with some air directed to the windshield.

The left knob can also be used to select defog or defrost mode. Information on defogging and defrosting can be found later in this section.

**(Fan):** Turn the center knob clockwise or counterclockwise to increase or decrease the fan speed. In any setting other than off, the fan will run continuously with the ignition on.

**(Off):** To turn the fan off, turn the knob all the way counterclockwise to the off position.

**Temperature Control:** Turn the right knob clockwise or counterclockwise to increase or decrease the temperature inside your vehicle.

## Defogging and Defrosting

Fog on the inside of windows is a result of high humidity (moisture) condensing on the cool window glass. This can be minimized if the climate control system is used properly. There are two modes to clear fog or frost from your windshield and side windows. Use the defog mode to clear the windows of fog or moisture and warm the passengers. Use the defrost mode to remove fog or frost from the windshield more quickly. For best results, clear all snow and ice from the windshield before defrosting.

Turn the left knob to select the defog or defrost mode.

**(Defog):** This mode directs half of the air to the windshield and the side window outlets and half to the floor outlets.To defog the windows faster, turn the temperature control knob clockwise to the warmest setting.

**(Defrost):** This mode directs most of the air to the windshield, with some air directed to the side window outlets and the floor outlets.

## Rear Window Defogger

The rear window defogger uses a warming grid to remove fog from the rear window.

The rear window defogger will only work when the ignition is in RUN.

**(Rear):** Press the button to turn the rear window defogger on or off. Be sure to clear as much snow from the rear window as possible. An indicator light above the button will come on to let you know that the rear window defogger is activated.

The rear window defogger will turn off approximately 15 minutes after the button is pressed. If turned on again, the defogger will only run for approximately five minutes before turning off. The defogger can also be turned off by pressing the button again or by turning off the engine.

***Notice:*** **Don't use anything sharp on the inside of the rear window. If you do, you could cut or damage the warming grid, and the repairs wouldn't be covered by your warranty. Do not attach a temporary vehicle license, tape, a decal or anything similar to the defogger grid.**

## Climate Control System (With Air Conditioning)

With this system you can control the heating, cooling and ventilation for your vehicle.



### Operation

To change the current mode, select one of the following:

**(Vent):** This mode directs air to the instrument panel outlets.

**(Bi-Level):** This mode directs approximately half of the air to the instrument panel outlets, and then directs the remaining air to the floor outlets. Cooler air is directed to the upper outlets and warmer air to the floor outlets.

**(Floor):** This mode directs most of the air to the floor outlets with some air directed to the windshield.

The left knob can also be used to select defog or defrost mode. Information on defogging and defrosting can be found later in this section.

**(Fan):** Turn the center knob clockwise or counterclockwise to increase or decrease the fan speed. In any setting other than off, the fan will run continuously with the ignition on. The fan must be turned on to run the air conditioning compressor.

**(Off):** To turn the fan off, turn the knob all the way counterclockwise to the off position.

**Temperature Control:** Turn the right knob clockwise or counterclockwise to increase or decrease the temperature inside your vehicle.

**(Recirculate):** This mode keeps outside air from coming in the vehicle. It can be used to prevent outside air and odors from entering your vehicle or to help heat or cool the air inside your vehicle more quickly. An indicator light will come on in this mode.

The air-conditioning compressor also comes on. Operation in this mode during periods of high humidity and cool outside temperatures may result in increased window fogging. If window fogging is experienced, select the defrost mode.

**(Air Conditioning):** Press this button to turn the air-conditioning system on or off. When this button is pressed, an indicator light above the button will come on to let you know the air conditioning is activated.

On hot days, open the windows to let hot inside air escape; then close them. This helps to reduce the time it takes for your vehicle to cool down. It also helps the system to operate more efficiently.

For quick cool down on hot days:

1. Select the recirculation mode.
2. Select air conditioning.
3. Select the coolest temperature.
4. Select the highest fan speed.

Using these settings together for long periods of time may cause the air inside of your vehicle to become too dry. To prevent this from happening, after the air in your vehicle has cooled, turn off the recirculation by pressing the button again.

The air-conditioning system removes moisture from the air, so you may sometimes notice a small amount of water dripping underneath your vehicle while idling or after turning off the engine. This is normal.

## Defogging and Defrosting

Fog on the inside of windows is a result of high humidity (moisture) condensing on the cool window glass. This can be minimized if the climate control system is used properly. There are two modes to clear fog or frost from your windshield and side windows. Use the defog mode to clear the windows of fog or moisture and warm the passengers. Use the defrost mode to remove fog or frost from the windshield more quickly. For best results, clear all snow and ice from the windshield before defrosting.

Turn the left knob to select the defog or defrost mode.

**(Defog):** This mode directs half of the air to the windshield and the side window outlets and half to the floor outlets. When you select this mode the system runs the air-conditioning compressor. To defog the windows faster, turn the temperature control knob clockwise to the warmest setting.

**(Defrost):** This mode directs most of the air to the windshield, with some air directed to the side window outlets and the floor outlets. When you select this mode the system runs the air-conditioning compressor.

## Rear Window Defogger

The rear window defogger uses a warming grid to remove fog from the rear window.

The rear window defogger will only work when the ignition is in RUN.

**(Rear):** Press the button to turn the rear window defogger on or off. Be sure to clear as much snow from the rear window as possible. An indicator light above the button will come on to let you know that the rear window defogger is activated.

The rear window defogger will turn off approximately 15 minutes after the button is pressed. If turned on again, the defogger will only run for approximately five minutes before turning off. The defogger can also be turned off by pressing the button again or by turning off the engine.

***Notice:*** **Don't use anything sharp on the inside of the rear window. If you do, you could cut or damage the warming grid, and the repairs wouldn't be covered by your warranty. Do not attach a temporary vehicle license, tape, a decal or anything similar to the defogger grid.**

## Outlet Adjustment

Use the louvers located on the air outlets to change the direction of the airflow.

### Operation Tips

- Clear away any ice, snow or leaves from the air inlets at the base of the vehicle that may block the flow of air into your vehicle.
- Use of non-GM approved hood deflectors may adversely affect the performance of the system.
- Keep the path under the front seats clear of objects to help circulate the air inside of your vehicle more effectively.

## Passenger Compartment Air Filter

Passenger compartment air, both outside air and recirculated air, is routed through a passenger compartment filter. The filter removes certain particles from the air, including pollen and dust particles. Reductions in airflow, which may occur more quickly in dusty areas, indicate that the filter needs to be replaced early.

The filter should be replaced as part of routine scheduled maintenance. See *Scheduled Maintenance on page 6-4* for replacement intervals. See your retailer for details on changing the filter. To find out what type of filter to use, see *Normal Maintenance Replacement Parts on page 6-16*.

To access the passenger compartment air filter you must go through the glove box.

1. Open the glove box and remove all articles from the inside.

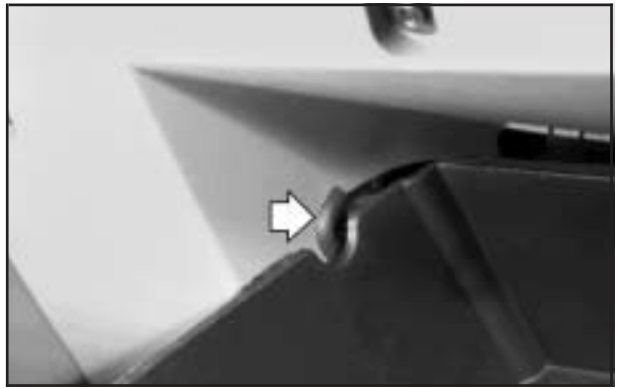

2. Locate the doorstop insulators on each side of the glove box and remove them.
3. Tilt the glove box door down by squeezing on each side of the glove box until the door can be lowered from its track. Lower the glove box door completely.



4. Open the passenger compartment air filter door by reaching through the opening in the back of the glove box and raising the tab until the door can be opened downward.



5. Remove the filter by sliding it out of the housing.

When installing a new air filter make sure the AIR FLOW arrow is pointing downward. Reverse Steps 1 through 5 making sure the glove box door snaps back into place.

# Warning Lights, Gages, and Indicators

This part describes the warning lights and gages that may be on your vehicle. The pictures will help you locate them.

Warning lights and gages can signal that something is wrong before it becomes serious enough to cause an expensive repair or replacement. Paying attention to your warning lights and gages could also save you or others from injury.

Warning lights come on when there may be or is a problem with one of your vehicle's functions. As you will see in the details on the next few pages, some warning lights come on briefly when you start the engine just to let you know they're working. If you are familiar with this section, you should not be alarmed when this happens.

Gages can indicate when there may be or is a problem with one of your vehicle's functions. Often gages and warning lights work together to let you know when there's a problem with your vehicle.

When one of the warning lights comes on and stays on when you are driving, or when one of the gages shows there may be a problem, check the section that tells you what to do about it. Please follow this manual's advice. Waiting to do repairs can be costly – and even dangerous. So please get to know your warning lights and gages. They're a big help.

Your vehicle also has a message center that works along with the warning lights and gages. See *Message Center on page 3-41*.

## Instrument Panel Cluster

Your instrument cluster is designed to let you know at a glance how your vehicle is running. You'll know how fast you're going, about how much fuel you've used, and many other things you'll need to know to drive safely and economically.

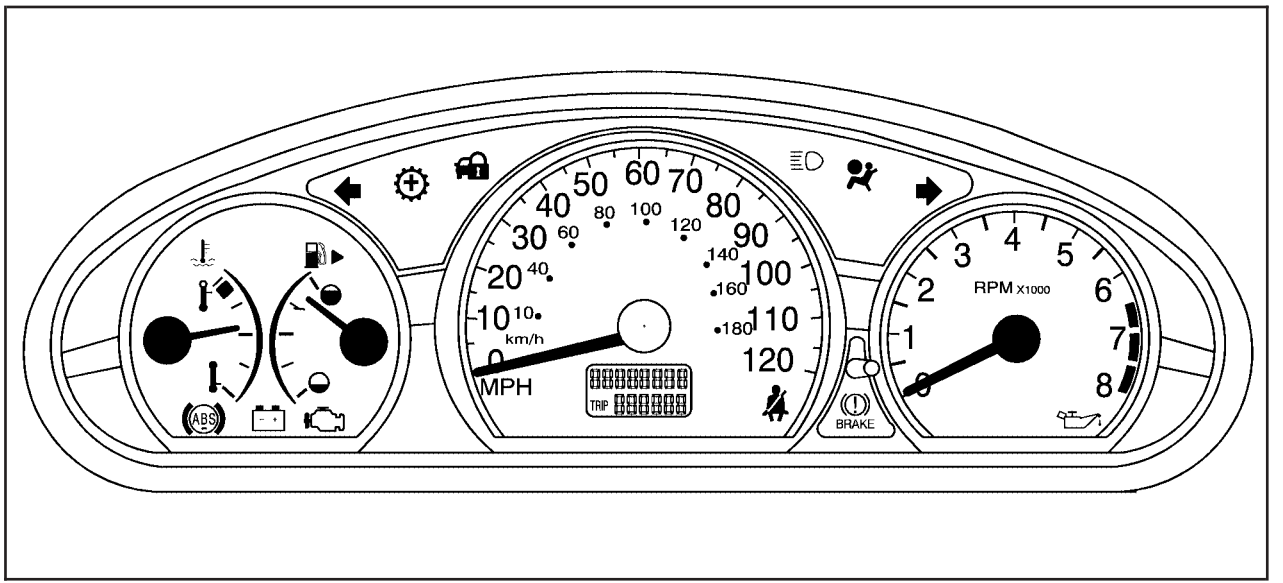

## Speedometer and Odometer

Your speedometer lets you see your speed in both miles per hour (mph) and kilometers per hour (km/h).

Your odometer is located in your message center, and shows how far your vehicle has been driven, in either miles (used in the United States) or kilometers (used in Canada).

When information messages need to be shown in the message center, they will be shown in place of the odometer. To display the odometer after a message(s) is shown, clear each message by pressing the trip/reset button located to the right of the speedometer. See *Message Center on page 3-41* for more information.

Your vehicle has a tamper-resistant odometer. You may wonder what happens if your vehicle needs a new odometer installed. If the new one can be set to the mileage total of the old odometer, then that will be done. If it can't, it will be set at zero and a label must be put on the driver's door to show the old mileage reading when the new odometer was installed. If the mileage is unknown, the label should then indicate "previous mileage unknown".

### Trip Odometer

Your trip odometer shows how far your vehicle has been driven since the trip odometer was last reset. To reset the trip odometer to zero, press and hold the trip/reset button for about two seconds.

## Tachometer

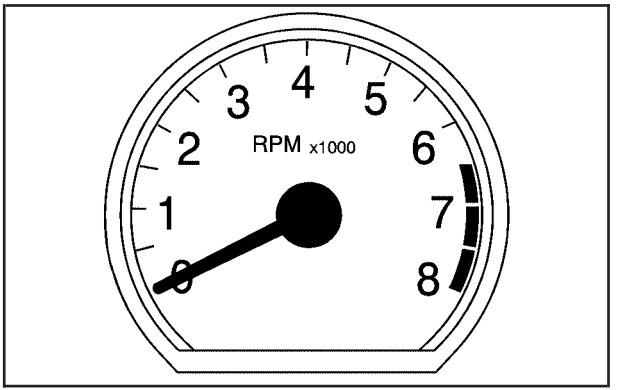


The tachometer displays the engine speed in revolutions per minute (rpm).

***Notice:*** **If you operate the engine with the tachometer in the shaded warning area, your vehicle could be damaged, and the damages would not be covered by your warranty. Do not operate the engine with the tachometer in the shaded warning area.**

The maximum rpm is limited in PARK (P) and NEUTRAL (N) to 4000 rpm by the vehicle's computer. This is to prevent engine damage.

## Safety Belt Reminder Light

When the key is turned to RUN or START, a chime will come on for several seconds to remind people to fasten their safety belts, unless the driver's safety belt is already buckled.



The safety belt light will also come on and stay on for several seconds, then it will flash for several more.

If the driver's belt is already buckled, neither the chime nor the light will come on.

## Air Bag Readiness Light

There is an air bag readiness light on the instrument panel, which shows the air bag symbol. The system checks the air bag's electrical system for malfunctions. The light tells you if there is an electrical problem. The system check includes the air bag sensor, the air bag modules, the wiring and the crash sensing and diagnostic module. For more information on the air bag system, see *Air Bag Systems on page 1-50*.

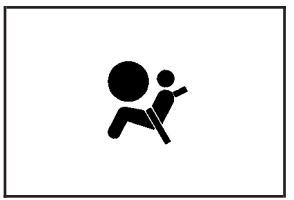

This light will come on when you start your vehicle, and it will flash for a few seconds. Then the light should go out. This means the system is ready.

If the air bag readiness light stays on after you start the vehicle or comes on when you are driving, your air bag system may not work properly. Have your vehicle serviced right away.

## ⚠ CAUTION:

**If the air bag readiness light stays on after you start your vehicle, it means the air bag system may not be working properly. The air bags in your vehicle may not inflate in a crash, or they could even inflate without a crash. To help avoid injury to yourself or others, have your vehicle serviced right away if the air bag readiness light stays on after you start your vehicle.**

The air bag readiness light should flash for a few seconds when you turn the ignition key to RUN. If the light doesn't come on then, have it fixed so it will be ready to warn you if there is a problem.

## Battery Warning Light

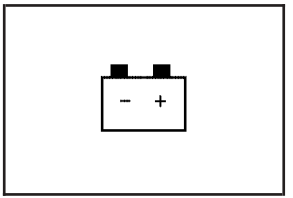


The battery warning light will come on briefly as a check, when you turn on the ignition. Then it should go out when the engine is started.

If the light does not come on when you start your vehicle, have your vehicle serviced right away. This condition may indicate your battery warning light is not functioning properly. If this light comes on while you are driving, be sure to turn off accessories such as the radio and climate control system. Have your vehicle serviced right away.

## Up-Shift Light

Your vehicle may have up-shift light. When this light comes on, you should shift to the next higher gear if weather, road, and traffic conditions allow you to.

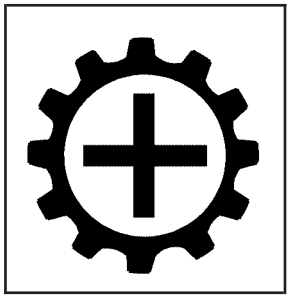

This light is located in your instrument panel cluster to the left of the speedometer.

**United States Only**

See *Manual Transaxle Operation on page 2-28* for more information.

## Brake System Warning Light

Your vehicle's hydraulic brake system is divided into two parts. If one part isn't working, the other part can still work and stop you. For good braking, though, you need both parts working well.

If the brake system warning light comes on, there is a brake problem. Have your brake system inspected right away.




The BRAKE light is located in the instrument panel cluster to the right of the speedometer.

This light should come on briefly when you turn the ignition key to RUN. If it doesn't come on then, have it fixed so it will be ready to warn you if there's a problem.

When the ignition is on, the BRAKE light will come on when you set your parking brake. The light will stay on if your parking brake doesn't release fully. A chime will also sound if the parking brake is not fully released and the vehicle is moving. If it stays on after your parking brake is fully released, it means you have a brake problem.

The BRAKE light will also come on to indicate a low brake fluid level. See *Brakes on page 5-38* for more information.

If the light comes on while you are driving, pull off the road and stop carefully. You may notice that the pedal is harder to push. Or, the pedal may go closer to the floor. It may take longer to stop. If the light is still on, have the vehicle towed for service. See *Towing Your Vehicle on page 4-31*.

**⚠ CAUTION:**

**Your brake system may not be working properly if the brake system warning light is on. Driving with the brake system warning light on can lead to an accident. If the light is still on after you have pulled off the road and stopped carefully, have the vehicle towed for service.**

## Anti-Lock Brake System Warning Light

If your vehicle has anti-lock brakes, the anti-lock brake system (ABS) warning light will come on briefly, as a check, when you start your vehicle. If it doesn't, have your vehicle serviced so that the light works properly when it needs to.

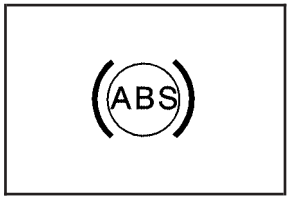


The ABS light is located in the instrument panel cluster, to the left of the engine coolant temperature gage.

If the light stays on longer than a few seconds after you start your engine, or comes on and stays on while you are driving, try resetting the system.

To reset the system, do the following:

1. If you are driving, pull over when it is safe to do so.
2. Be sure the vehicle is in PARK (P).
3. Turn off the ignition.
4. Then restart the engine.

If the light remains on after resetting the system or comes on again while driving, your vehicle needs service. If the ABS light is on, but the regular brake system warning light is not on, you do not have anti-lock brakes, but you still have regular brakes. Have your vehicle serviced right away. If both brake lights are on, you do not have anti-lock brakes, and there's a problem with your regular brakes as well. Have your vehicle towed for service. See *Towing Your Vehicle on page 4-31*.

## Engine Coolant Temperature Gage

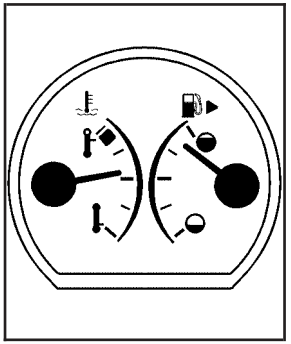

This gage on the left measures the temperature of the vehicle's engine coolant. If the pointer moves into the shaded area, your engine is too hot!

If the engine coolant temperature reaches 253° (123°C) the CHK GAGE message will appear and a chime will sound to alert you to the engine coolant temperature gage. See *Message Center on page 3-41*.

If you have been operating your vehicle under normal driving conditions, you should pull off the road and stop your vehicle, be sure the air conditioning is off, let the engine idle for a few minutes, then turn off the engine.

If your engine control system detects a failure in the engine coolant temperature circuit, the malfunction indicator lamp (service engine soon) light will come on. The coolant gage may read all the way hot or cold. The engine cooling fan will be turned on to protect the engine and transmission. See *Malfunction Indicator Lamp on page 3-36* for more information.

# Malfunction Indicator Lamp

## Service Engine Soon Light

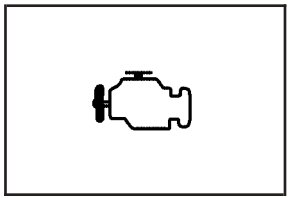

Your vehicle is equipped with a computer which monitors operation of the fuel, ignition and emission control systems.

This system is called OBD II (On-Board Diagnostics-Second Generation) and is intended to assure that emissions are at acceptable levels for the life of the vehicle, helping to produce a cleaner environment. The SERVICE ENGINE SOON light comes on to indicate that there is a problem and service is required. Malfunctions often will be indicated by the system before any problem is apparent. This may prevent more serious damage to your vehicle. This system is also designed to assist your service technician in correctly diagnosing any malfunction.

***Notice:*** **If you keep driving your vehicle with this light on, after a while, your emission controls may not work as well, your fuel economy may not be as good and your engine may not run as smoothly. This could lead to costly repairs that may not be covered by your warranty.**

***Notice:*** **Modifications made to the engine, transaxle, exhaust, intake or fuel system of your vehicle or the replacement of the original tires with other than those of the same Tire Performance Criteria (TPC) can affect your vehicle's emission controls and may cause this light to come on. Modifications to these systems could lead to costly repairs not covered by your warranty. This may also result in a failure to pass a required Emission Inspection/Maintenance test.**

This light should come on, as a check to show you it is working, when the ignition is on and the engine is not running. If the light does not come on, have it repaired. This light will also come on during a malfunction in one of two ways:

- **Light Flashing** — A misfire condition has been detected. A misfire increases vehicle emissions and may damage the emission control system on your vehicle. Diagnosis and service may be required.
- **Light On Steady** — An emission control system malfunction has been detected on your vehicle. Diagnosis and service may be required.

## If the Light Is Flashing

The following may prevent more serious damage to your vehicle:

- Reducing vehicle speed.
- Avoiding hard accelerations.
- Avoiding steep uphill grades.
- If you are towing a trailer, reduce the amount of cargo being hauled as soon as it is possible.

If the light stops flashing and remains on steady, see “If the Light Is On Steady” following.

If the light continues to flash, when it is safe to do so, *stop the vehicle.* Find a safe place to park your vehicle. Turn the key off, wait at least 10 seconds and restart the engine. If the light remains on steady, see “If the Light Is On Steady” following. If the light is still flashing, follow the previous steps, and see your retailer for service as soon as possible.

## If the Light Is On Steady

You may be able to correct the emission system malfunction by considering the following:

Did you recently put fuel into your vehicle?

If so, reinstall the fuel cap, making sure to fully install the cap. See *Filling Your Tank on page 5-8*. The diagnostic system can determine if the fuel cap has been left off or improperly installed. A loose or missing fuel cap will allow fuel to evaporate into the atmosphere. A few driving trips with the cap properly installed should turn the light off.

Did you just drive through a deep puddle of water?

If so, your electrical system may be wet. The condition will usually be corrected when the electrical system dries out. A few driving trips should turn the light off.

Have you recently changed brands of fuel?

If so, be sure to fuel your vehicle with quality fuel. See *Gasoline Octane on page 5-5*. Poor fuel quality will cause your engine not to run as efficiently as designed. You may notice this as stalling after start-up, stalling when you put the vehicle into gear, misfiring, hesitation on acceleration or stumbling on acceleration. (These conditions may go away once the engine is warmed up.) This will be detected by the system and cause the light to turn on.

If you experience one or more of these conditions, change the fuel brand you use. It will require at least one full tank of the proper fuel to turn the light off.

If none of the above steps have made the light turn off, your retailer can check the vehicle. Your retailer has the proper test equipment and diagnostic tools to fix any mechanical or electrical problems that may have developed.

## Emissions Inspection and Maintenance Programs

Some state/provincial and local governments have or may begin programs to inspect the emission control equipment on your vehicle. Failure to pass this inspection could prevent you from getting a vehicle registration.

Here are some things you need to know in order to help your vehicle pass an inspection:

Your vehicle will not pass this inspection if the SERVICE ENGINE SOON light is on or not working properly.

Your vehicle will not pass this inspection if the OBD (on-board diagnostic) system determines that critical emission control systems have not been completely diagnosed by the system. The vehicle would be considered not ready for inspection. This can happen if you have recently replaced your battery or if your battery has run down. The diagnostic system is designed to evaluate critical emission control systems during normal driving. This may take several days of routine driving. If you have done this and your vehicle still does not pass the inspection for lack of OBD system readiness, your retailer can prepare the vehicle for inspection.

## Oil Pressure Light

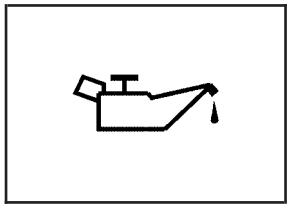

If you have a low engine oil pressure problem, this light will stay on after you start your engine, or come on when you are driving. This indicates that your engine is not receiving enough oil.

The engine could be low on oil, or could have some other oil problem. Have it fixed immediately.

The oil light may also come on when the ignition is on but the engine is not running, the light will come on as a test to show you it is working, but the light will go out when you turn the ignition to START. If it doesn't come on with the ignition on, you may have a problem with the fuse or bulb. Have it fixed right away.

**⚠ CAUTION:**

**Do not keep driving if the oil pressure is low. If you do, your engine can become so hot that it catches fire. You or others could be burned. Check your oil as soon as possible and have your vehicle serviced.**

***Notice:*** **Lack of proper engine oil maintenance may damage the engine. The repairs would not be covered by your warranty. Always follow the maintenance schedule in this manual for changing engine oil.**

## Passlock® Warning Light

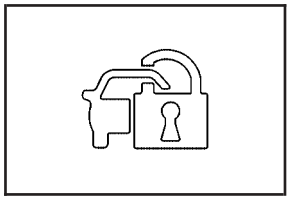

Your vehicle is equipped with a Passlock® theft-deterrent system. With this system, the security light will flash as you open the door if your ignition is off.

For more information, see *Passlock® on page 2-17*.

## Fuel Gage

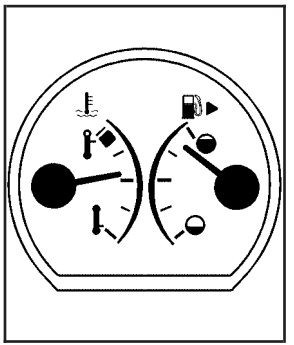

When the ignition is on, the fuel gage on the right tells you about how much fuel you have left in your tank.

When the indicator nears empty, the LOW FUEL message will come on. You still have a little fuel left, but you should get more soon. See *Low Fuel Warning Message on page 3-45* for more information.

Here are four things that some owners ask about. None of these show a problem with your fuel gage:

- At the service station, the fuel pump shuts off before the gage reads full.
- It takes a little more or less fuel to fill up than the gage indicated. For example, the gage may have indicated the tank was half full, but it actually took a little more or less than half the tank's capacity to fill the tank.
- The gage moves a little when you turn a corner or speed up.
- The gage takes a few seconds to stabilize after the ignition is turned on, and will go back to empty when you turn the ignition off.

For your fuel tank capacity, see *Capacities and Specifications on page 5-102*.

# Message Center

The message center is located in the instrument panel cluster. It gives you important safety and maintenance facts.

If there are several messages, each message will be shown for a few seconds and will continue to repeat until cleared. To clear a message, press the trip/reset button while the message you want to clear is being displayed.

Many messages will also cause a chime to sound, to alert you to the message.

## Changing the Language (Canada Only)

Vehicles first sold in Canada have instrument panel clusters that show messages in either English or French. To change the language, do the following:

1. Turn the ignition on.
2. Press the trip/reset button until the current language of ENGLISH or FRENCH is displayed.
3. Press and hold the trip/reset button for several seconds until the language is changed.
4. Press the trip/reset button to return to the odometer display.

## Low Traction Message

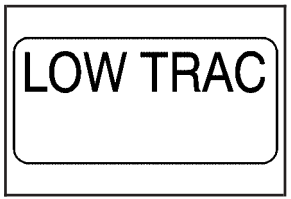


If your vehicle has a traction control system (TCS), this LOW TRAC message will be displayed when the system is limiting wheel spin.

See *Traction Control System (TCS) on page 4-8* for more information.

## Traction Off Message

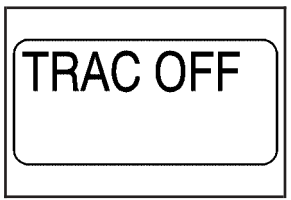


If your vehicle has a traction control system (TCS), this TRAC OFF message will be displayed briefly when the system has been turned off.

See *Traction Control System (TCS) on page 4-8* for more information.

## Cruise Control Message

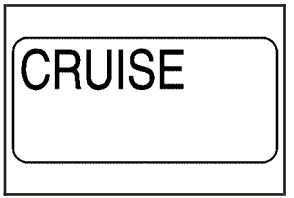


The CRUISE message is displayed briefly when your cruise control system has been activated, or set to a desired speed.

## Transaxle Fluid Hot Message

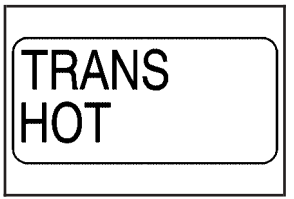


If the TRANS HOT message is displayed, the automatic transaxle fluid may be overheating.

See *Engine Overheating on page 5-29* for more information.

## Transaxle Fluid Cold Message

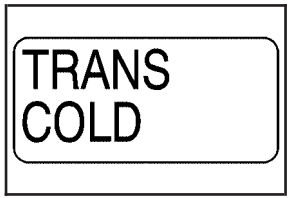


The TRANS COLD message will be displayed if the automatic transaxle fluid temperature is too cold to operate correctly.

When this happens, shifting out of PARK (P) is prevented until the transaxle fluid warms up. Let the engine run for a few minutes until this message is no longer displayed. The vehicle may then be shifted out of PARK (P).

## Low Coolant Level Warning Message

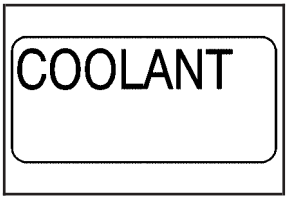


When the COOLANT message is displayed while the engine is running, the engine coolant is low.

See *Engine Coolant on page 5-26* for more information.

## Change Engine Oil Message

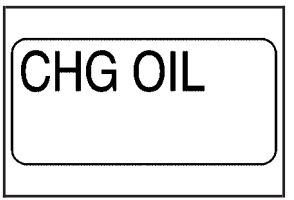


When the CHG OIL message is displayed, it means that service is required for your vehicle.

See *Scheduled Maintenance on page 6-4 Engine Oil on page 5-15* for more information.

## Check Gage Message




If the CHK GAGE message is displayed, the engine coolant may be overheated. A chime will also sound to alert you to this message.

If this message is displayed, check your engine coolant temperature gage. If the needle is in the red area, your engine may be overheating. See *Engine Coolant Temperature Gage on page 3-35* and *Engine Overheating on page 5-29* for more information.

***Notice:*** **Driving with either the CHK GAGE message or the COOLANT message displayed in the message center and the Engine Coolant Temperature Gage on your instrument panel in the red zone could cause your vehicle to overheat. See "Engine Overheating" under *Engine Coolant on page 5-26*. Your vehicle could be damaged and the damages might not be covered by your warranty.**

## Power Steering Message




If the PWR STR message is displayed, a problem has been detected with the electric power steering.

If you suspect electric power steering problems and/or the PWR STR message is on, see your retailer for service and repair.

## Trunk Ajar Warning Message

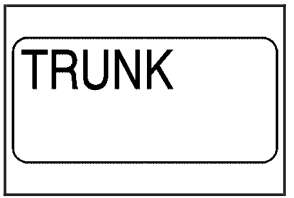


When the TRUNK message is displayed, it means the trunk lid is not fully closed.

## Low Fuel Warning Message

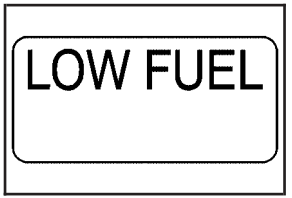


When the LOW FUEL message is displayed, you may have less than 1.5 gallons (5.5 liters) of fuel left. A chime will also sound to alert you to this message.

You should refuel your vehicle immediately. When the fuel tank is filled to more than 3.3 gallons (11.5 liters), this message will no longer be displayed.

## Service Vehicle Message




If the SERVICE VEHICLE message is displayed, a non-emission related problem has occurred which requires the vehicle be taken in for service.

These problems may not be obvious and may affect vehicle performance and durability. See your retailer for necessary repairs to maintain top vehicle performance.

## Error Message

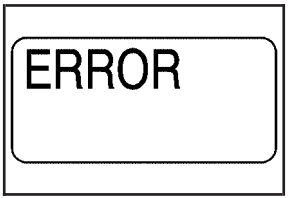


When the ERROR message is displayed, there is a problem with your odometer system.

See your retailer for service and repair if this message is displayed.

# Audio System(s)

***Notice:*** **Before adding any sound equipment to your vehicle, like a tape player, CB radio, mobile telephone, or two-way radio, make sure that it can be added by checking with your dealer. Also, check federal rules covering mobile radio and telephone units. If sound equipment can be added, it is very important to do it properly. Added sound equipment may interfere with the operation of your vehicle's engine, radio, or other systems, and even damage them. Your vehicle's systems may interfere with the operation of sound equipment that has been added improperly.**

***Notice:*** **Getting suntan lotion, hand lotion, or hand cleaner on the radio, will soften the paint, and the paint will eventually begin to peel. Repairs will not be covered by your vehicle's warranty. Try not to get suntan lotion, hand lotion, or hand cleaner on the radio. If you do, wipe the lotion or cleaner off immediately.**

Figure out which audio system is in your vehicle, find out what your audio system can do, and how to operate all of its controls.

Your vehicle has a feature called Retained Accessory Power (RAP). With RAP, the audio system can be played even after the ignition is turned off. See "Retained Accessory Power (RAP)" under *Ignition Positions on page 2-18*.

## Setting the Time for Radios without Radio Data Systems (RDS)

Press and hold the RCL button, at the same time press the TUNE/SEEK down or up arrows. Press the arrows until the correct time appears on the display. The time can be set with the ignition on or off.

## Setting the Time for Radios with Radio Data Systems (RDS)

Press and hold the RCL button and at the same time press the HR (AUTO EQ left) or MN (AUTO EQ right) arrows. You will hear a beep indicating that you can change the time. Release the RCL button and press HR until the correct hour appears on the display. Press MN until the correct minute appears on the display. The time can be set with the ignition on or off.

To synchronize the time with an FM station broadcasting Radio Data System (RDS) information, press and hold the RCL and RDS buttons at the same time for two seconds until SET RDS TIME appears on the display. If the time is not available from the station NO RDS TIME SET will appear on the display.

RDS time is broadcast once a minute. After tuning to an RDS broadcast station, it may take a few minutes for the time to update.

## AM-FM Radio




## Playing the Radio

**ON (Power):** Push this knob to turn the system on and off.

**VOL (Volume):** Turn this knob to increase or to decrease the volume.

**RCL (Recall):** Press this knob to switch the display between the radio station frequency and the time. When the ignition is off, press this knob to display the time.

## Finding a Station

**AM FM:** Press this button to switch between FM1, FM2, or AM. The display will show the selection.

▼ **TUNE** ▲**:** Press either arrow to select radio stations.

▼ **SEEK** ▲**:** Press the up or down arrow to go to the next or to the previous station and stay there.

The radio will only seek stations with a strong signal that are in the selected band.

**SCN (Scan):** Press this button to scan stations. The radio will go to a station, play for a few seconds, then go on to the next station. Press this button again to stop scanning.

The radio will only scan stations with a strong signal that are in the selected band.

## Setting Preset Stations

Up to 18 stations (six FM1, six FM2, and six AM) can be programmed on the six numbered pushbuttons, by performing the following steps:

1. Turn the radio on.
2. Press AM FM to select FM1, FM2, or AM.
3. Tune in the desired station.
4. Press and hold one of the six numbered pushbuttons until you hear a beep. Whenever that numbered pushbutton is pressed, the station that was set will return.
5. Repeat the steps for each pushbutton.

If the battery has been disconnected or a radio fuse has been removed, the preset stations and time of day will need to be reset.

## Using Automatic Set

Use this feature to automatically save the radio preset pushbuttons with the stations with the strongest radio signals.

**A.SET (Automatic Set):** Press this button to have the radio automatically select the first 12 strongest radio stations for FM and the six strongest radio stations for AM.

To select the stations, perform the following:

1. Press AM FM to select FM1, FM2, or AM.
2. Press and hold AM FM until you hear a beep.

   The radio will begin to search the current band. The radio will store the stations, starting from the lowest frequency, to each preset pushbutton. A.SET will appear on the display when the radio is finished storing the stations.

## Cancelling Automatic Set

The radio retains the previously stored stations so they can be recalled when automatic set is canceled.

Press and hold A.SET until you hear a beep. A.SET will no longer appear on the display.

## Setting the Tone (Bass/Treble)

**BASS:** Press this knob lightly so it extends. Turn the knob to increase or to decrease the bass.

**TREB (Treble):** Press the BASS knob lightly so it extends, then pull then knob out slightly. Turn the knob to increase or to decrease the treble. If a station is weak or noisy, decrease the treble.

Push the knob back into it's stored position when not in use.

## Adjusting the Speakers (Balance/Fade)

**BAL (Balance):** To adjust the balance between the right and the left speakers, pull the VOL knob out slightly. Turn the knob to move the sound toward the right or the left speakers.

Push the knob back into it's stored position when not in use.

**FADE:** To adjust the fade between the front and the rear speakers, turn the ring around the VOL knob.

## Radio with CD (Base Level)



## Playing the Radio

**ON (Power):** Push this knob to turn the system on and off.

**VOL (Volume):** Turn this knob to increase or to decrease volume.

**RCL (Recall):** Press this knob to switch the display between the radio station frequency and the time. Time display is available with the ignition turned off.

## Finding a Station

**AM FM:** Press this button to switch between FM1, FM2, or AM. The display will show your selection.

▼ **TUNE** ▲**:** Press either arrow to select radio stations.

▼ **SEEK** ▲**:** Press the up or down arrow to go to the next or to the previous station and stay there.

The radio will seek only to stations that are in the selected band and only to those with a strong signal.

**SCN (Scan):** Press this button to scan stations. The radio will go to a station, play for a few seconds, then go on to the next station. Press this button again to stop scanning.

The radio will scan only to stations that are in the selected band and only to those with a strong signal.

## Setting Preset Stations

The six numbered pushbuttons let you return to your favorite stations. You can set up to 18 stations (six FM1, six FM2, and six AM) by performing the following steps:

1. Turn the radio on.
2. Press AM FM to select FM1, FM2, or AM.
3. Tune in the desired station.
4. Press and hold one of the six numbered pushbuttons until you hear a beep. Whenever you press that numbered pushbutton, the station you set will return.
5. Repeat the steps for each pushbutton.

If the battery has been disconnected or a radio fuse has been removed, the preset stations and time of day will need to be reset.

## Using Automatic Set

Use this feature to automatically save the radio preset pushbuttons with the stations with the strongest radio signals.

**A.SET (Automatic Set):** Press this button to have the radio automatically select the first 12 strongest radio stations for FM and the six strongest radio stations for AM.

To select the stations, perform the following:

1. Press AM FM to select FM1, FM2, or AM.
2. Press and hold AM FM until you hear a beep.

   The radio will begin to search the current band. The radio will store the stations, starting from the lowest frequency, to each preset pushbutton. A.SET will appear on the display when the radio is finished storing the stations.

## Cancelling Automatic Set

The radio retains the previously stored stations so they can be recalled when automatic set is canceled.

Press and hold A.SET until you hear a beep. A.SET will no longer appear on the display.

## Setting the Tone (Bass/Treble)

**MODE:** Press this button until BAS or TRE appears on the display. Press the plus or minus buttons to increase or to decrease. The display will show the bass or the treble level. If a station is weak or noisy, you may want to decrease the treble.

## Adjusting the Speakers (Balance/Fade)

**MODE:** To adjust the balance between the right and the left speakers, press this button until BAL appears on the display. Press the plus or minus buttons to move the sound toward the right or the left speakers.

To adjust the fade between the front and the rear speakers, press this button until FAD appears on the display. Press the plus or minus buttons to move the sound toward the front or the rear speakers.

## Playing a CD

Insert a CD partway into the slot, label side up. The player will pull it in and the CD should begin playing. The CD symbol will appear on the display. You can insert a CD with the ignition off.

If you turn off the ignition or radio with a CD in the player, it will stay in the player. When you turn on the ignition or radio, the CD will start playing where it stopped, if it was the last selected audio source.

As each new track starts to play, the track number will appear on the display.

The CD player can play the smaller 8 cm single CDs with an adapter ring. Full-size CDs and the smaller CDs are loaded in the same manner.

If playing a CD-R the sound quality may be reduced due to CD-R quality, the method of recording, the quality of the music that has been recorded, and the way the CD-R has been handled. You may experience an increase in skipping, difficulty in finding tracks and/or difficulty in loading and ejecting. If these problems occur try a known good CD.

Do not add paper labels to CDs, they could get caught in the CD player.

Do not play 3 inch CDs without a standard adapter CD.

If an error appears on the display, see “CD Messages” later in this section.

**1 PRV (Previous):** Press this pushbutton to go to the start of the current track if more than eight seconds have played. If you hold this pushbutton or press it more than once, the player will continue moving backward through the CD.

**2 NXT (Next):** Press this pushbutton to go to the next track. If you hold this pushbutton or press it more than once, the player will continue moving forward through the CD.

**3 REV (Reverse):** Press and hold this pushbutton to reverse quickly within a track. Release it to play the track. The elapsed time of the track will appear on the display.

**4 FWD (Forward):** Press and hold this pushbutton to advance quickly within a track. Release it to play the track. The elapsed time of the track will appear on the display.

**5 RDM (Random):** Press this pushbutton to hear the tracks in random, rather than sequential, order. RDM will appear on the display. Press RDM again to turn off random play.

**6 RPT (Repeat):** Press this pushbutton to hear a track over again. RPT will appear on the display. The current track will continue to repeat. Press RPT again to turn off repeat play.

▲ **TUNE SEEK** ▼**:** Press the up arrow to go to the start of the current or previous track. Press the down arrow to go to the start of the next track. If you hold either arrow or press it more than once, the player will continue moving backward or forward through the CD.

**RCL (Recall):** Press this button to see the track number. Press this button again to see how long the current track has been playing.

**AM FM:** Press this button to listen to the radio when a CD is playing. The inactive CD will remain safely inside the radio for future listening.

**CD:** Press this button to play a CD when listening to the radio. The CD symbol will appear on the display when a CD is loaded.

**EJ (Eject):** Press this button to eject a CD. Eject may be activated with either the ignition or radio off.

## CD Messages

If ERR appears on the display and the CD comes out, it could be for one of the following reasons:

- It is very hot. When the temperature returns to normal, the CD should play.
- You are driving on a very rough road. When the road becomes smooth, the CD should play.
- The CD is dirty, scratched, wet, or upside down.
- The air is very humid. If so, wait about an hour and try again.
- There may have been a problem while burning the CD.
- The label may be caught in the CD player.

If the CD is not playing correctly, for any other reason, try a known good CD.

If any error occurs repeatedly or if an error cannot be corrected, contact your retailer. If your radio displays an error message, write it down and provide it to your retailer when reporting the problem.

## Radio with CD (MP3)

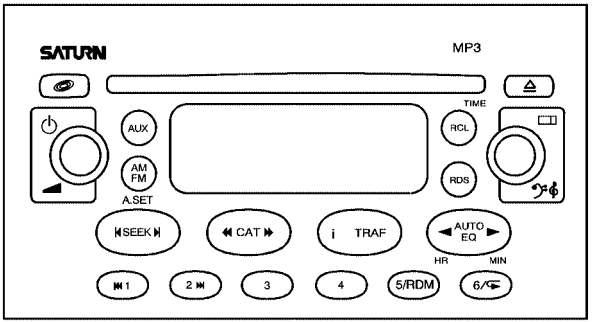


**Single CD Player Audio System Shown — Six-Disc CD Player Similar**

## Radio Data System (RDS)

Your audio system is equipped with a Radio Data System (RDS). RDS features are available for use only on FM stations that broadcast RDS information.

With RDS, your radio can do the following:

- Seek to stations broadcasting the selected type of programming
- Receive announcements concerning local and national emergencies
- Display messages from radio stations
- Seek to stations with traffic announcements

This system relies upon receiving specific information from these stations and will only work when the information is available. In some cases, a radio station may broadcast incorrect information that will cause the radio features to work improperly. If this happens, contact the radio station.

While you are tuned to an RDS station, the station name or the call letters will appear on the display instead of the frequency. RDS stations may also provide the time of day, a program type category for current programming, and the name of the program being broadcast.

## XM™ Satellite Radio Service (48 Contiguous US States)

XM™ is a continental U.S. based satellite radio service that offers 100 coast to coast channels including music, news, sports, talk, and children's programming. XM™ provides digital quality audio and text information, including song title and artist name. A service fee is required in order to receive the XM™ service. For more information, contact XM™ at www.xmradio.com or call 1-800-852-XMXM (9696).

## Playing the Radio

⏻ **(Power):** Press this knob to turn the system on and off.

**(Volume):** Turn this knob to increase or to decrease volume.

**RCL (Recall):** Press this button to view station call letters or RDS category, if available.

**i (Information):** Press this button to view RDS text information, if available.

## Finding a Station

**AM FM:** Press this button to switch between FM1, FM2, or AM. The display will show your selection.

**AUX (Auxiliary):** To select XM™ Satellite Radio Service (48 contiguous US states, if equipped), perform the following:

1. Press either CAT arrow to select different categories.
2. Rotate the tune knob or use either SEEK arrow to change channels.
3. Press the information button to view track title, artist title, and channel title.

**(Tune):** Turn this knob to select radio stations.

**SEEK :** Press and hold the right or left arrow to go to the next or to the previous station and stay there.

To scan stations, press either arrow until you hear a beep. The radio will go to a station, play for a few seconds, then go on to the next station. Press either arrow again to stop scanning.

To scan preset stations, press either arrow for four seconds until you hear a beep. The radio will go to a preset station stored on the pushbuttons, play for a few seconds, then go on to the next station. Press either arrow again or one of the pushbuttons to stop scanning presets.

The radio will seek and scan only to stations that are in the selected band and only to those with a strong signal.

## Setting Preset Stations

The six numbered pushbuttons let you return to your favorite stations. You can set up to 30 stations (six FM1, six FM2, and six AM, six XM1 and six XM2 (48 contiguous US states, if equipped) by performing the following steps:

1. Turn the radio on.
2. Press AM FM to select FM1, FM2, or AM. Press the AUX button to select XM1 or XM2.
3. Tune in the desired station.
4. Press the right or left AUTO EQ button to select the equalization.
5. Press and hold one of the six numbered pushbuttons. Preset X Stored will appear on the display and you will hear a beep. Whenever you press that numbered pushbutton, the station you set will return and the equalization that you selected will be automatically stored for that pushbutton. If the equalization of a preset is changed while listening to that station, the radio will automatically save the new equalization.
6. Repeat the steps for each pushbutton.

If the battery has been disconnected or a radio fuse has been removed, the preset stations and time of day may need to be reset.

## Using Automatic Set

Use this feature to automatically save the radio preset pushbuttons with the stations with the strongest radio signals.

**A.SET (Automatic Set):** Press and hold this button to have the radio automatically select the first 12 strongest radio stations for FM and the six strongest radio stations for AM.

To select the stations, perform the following:

1. Press AM FM to select FM1, FM2, or AM.
2. Press and hold AM FM until you hear a beep.

   The radio will begin to search the current band. The radio will store the stations, starting from the lowest frequency, to each preset pushbutton. A.SET will appear on the display when the radio is finished storing the stations.

## Cancelling Automatic Set

The radio retains the previously stored stations so they can be recalled when automatic set is canceled.

Press and hold AM FM until you hear a beep. A.SET will no longer appear on the display.

## Setting the Tone (Bass/Treble)

**(Bass/Treble):** Press this knob until BASS or TREB appears on the display. Turn this knob to increase or to decrease. The display will show the bass or the treble level. If a station is weak or noisy, you may want to decrease the treble.

## Adjusting the Speakers (Balance/Fade)

**(Balance/Fade):** To adjust the balance between the right and the left speakers, press this knob until BAL appears on the display. Turn this knob to move the sound toward the right or the left speakers.

To adjust the fade, press this knob until FAD appears on the display. Turn this knob to move the sound toward the front or the rear speakers.

◀ **AUTO EQ** ▶ **(Automatic Equalization):** Press the right and left arrow to select customized equalization settings designed for country/western, jazz, news, pop, rock, and classical. There is also a flat setting that has been factory tuned for the best overall performance.

To return the bass and treble to the manual mode, press either arrow until CUSTOM appears on the display.

## Finding a Category (CAT) Station

To select and find a desired CAT perform the following:

1. Press the RDS button to activate program type select mode.
2. Press the right or left CAT arrow to select a category. CATEGORY will appear on the display.
3. Once the desired category is displayed, press the SEEK button to take you to the category's first station.
4. If you want to go to another station within that category and CAT is displayed, press the SEEK button once. If CAT is not displayed, press the RDS button or either CAT arrow to enable category search, then press the SEEK button.
5. Select a category using either CAT arrow. While the category is displayed, press and hold either SEEK arrow until you hear a beep to scan through all stations in that RDS category.

RDS categories only have six available options from which to choose. The category you select will search for an expanded list of categories.

If the RCL button is pressed, the broadcast category will appear on the display, not the selected category.

If the radio cannot find the desired program type, NOT FOUND will appear on the display and the radio will return to the last station you were listening to.

## RDS Messages

**ALERT!:** Alert warns of local or national emergencies. When an alert announcement comes on the current radio station, ALERT! will appear on the display. You will hear the announcement, even if the volume is muted or a CD is playing. If a CD is playing, play will stop during the announcement. You will not be able to turn off alert announcements.

ALERT! will not be affected by tests of the emergency broadcast system. This feature is not currently supported by RDS stations in the U.S. It is up to the individual stations to decide to support this feature.

**i (Information):** If the current station has a message, the information symbol will appear on the display. Press this button to see the message. The message may display the artist, song title, call in phone numbers, etc.

If the whole message is not displayed, parts of the message will appear every three seconds. To scroll through the message at your own speed, press this button repeatedly. A new group of words will appear on the display with each press. Once the complete message has been displayed, the information symbol will disappear from the display until another new message is received. The old message can be displayed by pressing this button until a new message is received or a different station is tuned to.

**TRAF (Traffic):** If TA appears on the display, the tuned station has the ability to broadcast traffic announcements and if a traffic announcement comes on the tuned radio station you will hear it.

If the current tuned station does not broadcast traffic announcements, press this button and the radio will seek to a station that does. When the radio finds a station that broadcasts traffic announcements, the radio will stop and TA will be displayed. When a traffic announcement comes on the tuned radio station you will hear it. If no station is found, NO TRAFFIC will appear on the display.

If TA is on the display you can press the TRAF button to turn of the traffic announcements.

Your radio will play the traffic announcement with the volume at a moderate level. Your radio will interrupt the play of a CD or XM™ Satellite Radio Station if the last tuned FM station broadcasts traffic announcements.

Very few radio stations in the U.S. currently use the traffic announcement feature.

## Playing the Single CD Player

Insert a CD partway into the slot, label side up. The player will pull it in and the CD should begin playing. The CD symbol will appear on the display. You can insert a CD with the ignition off. A CD can also be loaded by pressing the LOAD button. If no CD is currently loaded, insert a CD.

If you turn off the ignition or radio with a CD in the player, it will stay in the player. When you turn on the ignition or radio, the CD will start playing where it stopped, if it was the last selected audio source.

As each new track starts to play, the track number will appear on the display.

The CD player can play the smaller 8 cm or 3 inch single CDs with an adapter ring. Full-size CDs and the smaller CDs are loaded in the same manner.

If playing a CD-R the sound quality may be reduced due to CD-R quality, the method of recording, the quality of the music that has been recorded, and the way the CD-R has been handled. You may experience an increase in skipping, difficulty in finding tracks, and/or difficulty in loading and ejecting. If these problems occur try a known good CD.

Do not add paper labels to CDs, they could get caught in the CD player.

If an error appears on the display, see “CD Messages” later in this section.

**1 (Previous):** Press this pushbutton to go to the start of the current track. If you hold this pushbutton or press it more than once, the player will continue moving backward through the CD.

**2 (Next):** Press this pushbutton to go to the next track. If you hold this pushbutton or press it more than once, the player will continue moving forward through the CD.

**5/ RDM (Random):** Press this pushbutton to hear the tracks in random, rather than sequential, order. RDM will appear on the display. Press RDM again to turn off random play.

**6/ (Repeat):** Press this pushbutton to hear a track over again. RPT will appear on the display. The current track will continue to repeat. Press this pushbutton again to turn off repeat play.

**CAT (Reverse):** Press and hold the left arrow to reverse quickly within a track. Release it to play the passage. The elapsed time of the track will appear on the display.

**CAT (Forward):** Press and hold the right arrow to advance quickly within a track. Release it to play the passage. The elapsed time of the track will appear on the display.

**SEEK:** Press the left arrow to go to the start of the current or to the previous track. Press the right arrow to go to the start of the next track. If you hold either arrow or press it more than once, the player will continue moving backward or forward through the CD.

To scan tracks, press either SEEK arrow for four seconds. The radio will go to the next track, play for a few seconds, then go on to the next track. Press either SEEK arrow again to stop scanning tracks.

**(Tune):** Turn this knob to quickly change tracks.

**(Information):** Press this button to view CD text information, if available. To change the default on the display to track name, album name, or artist name instead of elapsed track time press this button to view the available information. Then press and hold the RCL button for five seconds. The selected display will now be the default.

**AM FM:** Press this button to listen to the radio when a CD is playing. The inactive CD will remain safely inside the radio for future listening.

**AUX (Auxiliary):** Press this button to play a CD or to switch to XM1 or XM2 when listening to the radio.

**(Eject):** Press this button to eject a CD. Eject may be activated with either the ignition or radio off.

If you eject a CD, but decide that you want to listen to it, press the CD button. This will pull the CD back in and it will begin to play. If a CD is ejected, but not removed from the radio, the radio will automatically reload the CD, after 25 seconds, to prevent damage.

## Playing the Six-Disc CD Player

If you turn off the ignition or radio with a CD in the player, it will stay in the player. When you turn on the ignition or radio, the CD will start playing where it stopped, if it was the last selected audio source.

As each new track starts to play, the track number will appear on the display.

The CD player can play the smaller 8 cm and 3 inch single CDs with an adapter ring. Full-size CDs and the smaller CDs are loaded in the same manner.

If playing a CD-R the sound quality may be reduced due to CD-R quality, the method of recording, the quality of the music that has been recorded, and the way the CD-R has been handled. You may experience an increase in skipping, difficulty in finding tracks, and/or difficulty in loading and ejecting. If these problems occur try a known good CD.

Do not add paper labels to CDs, they could get caught in the CD player.

If an error appears on the display, see “CD Messages” later in this section.

**(Load):** Press this button to load CDs into the CD player. This CD player will hold up to six CDs.

To load one CD, do the following:

1. Turn the ignition on.
2. Press the load button for less than three seconds.
3. Press the pushbutton (1-6) for the CD slot to load. WAIT DISC X will appear on the display.

   If the CD slot is empty, LOAD DISC X will appear on the display, and a CD can be loaded. If a CD slot is already loaded, DISC X LOADED will appear on the display.
4. Load a CD. Insert the CD partway into the slot, label side up. The player will pull the CD in.

If you select an equalization setting for your CD, it will be activated each time you play a CD.

If the radio is on or off, the CD will begin to play automatically.

To load all CDs, do the following:

1. Turn the ignition on.
2. Press and hold the load button for more than three seconds.
3. Load, up to six CDs, in order, starting with the first empty slot.

   Loading will continue until all six CDs are loaded or load is stopped by pressing any other radio button. The radio will stop trying to load CDs if you wait too long to insert a CD.
4. Load a CD. Insert the CD partway into the slot, label side up. The player will pull the CD in.

You can cancel the loading of a CD by pressing the load button once.

If you select an equalization setting for your CD, it will be activated each time you play a CD.

If the radio is on or off, the CD will begin to play automatically.

**1 (Previous):** Press this pushbutton to go to the start of the current track. If you hold this pushbutton or press it more than once, the player will continue moving backward through the CD.

**2 (Next):** Press this pushbutton to go to the next track. If you hold this pushbutton or press it more than once, the player will continue moving forward through the CD.

**5/RDM (Random):** Press and release this pushbutton to hear the tracks on the current CD in random, rather than sequential, order. RDM will appear on the display. Press RDM again to turn off random play.

Press and hold RDM for two seconds to hear the tracks on all of the CDs loaded in random, rather than sequential, order. ALL RDM will appear on the display. Press RDM again to turn off random play.

**6/ (Repeat):** Press this pushbutton to hear a track over again. RPT will appear on the display. The current track will continue to repeat. Press RPT again to turn off repeat play.

Press and hold the RPT button to hear all tracks on the CD over again. RPT will appear on the display. The current track will continue to repeat. Press RPT again to turn off repeat play.

**CAT (Reverse):** Press and hold the left arrow to rewind quickly within a track. Release it to play the passage. The elapsed time of the track will appear on the display.

**CAT (Forward):** Press and hold the right arrow to advance quickly within a track. Release it to play the passage. The elapsed time of the track will appear on the display.

**SEEK:** Press the right or left arrow to go to the previous or next CD.

To scan tracks on the current CD, press and hold either SEEK arrow for more than two seconds, but less then four seconds. The radio will go to the next track, play for a few seconds, then go on to the next track. Press either SEEK arrow again to stop scanning tracks.

To scan tracks on all of the CDs loaded, press and hold either SEEK arrow for more than four seconds. The radio will go to the next track, play for a few seconds, then go on to the next track. Press either SEEK arrow again to stop scanning tracks.

**(Tune):** Turn this knob to quickly change tracks.

**(Information):** Press this button to view CD text information, if available. To change the default on the display, (track name, artist name, album name, file name, or directory), press this button to scroll through each display. Once the desired display is shown, press and hold the RCL button for five seconds. The selected display will now be the default.

**AM FM:** Press this button to listen to the radio when a CD is playing. The inactive CD(s) will remain safely inside the radio for future listening.

**AUX (Auxiliary):** Press this button to play a CD or to switch to XM1 or XM2 when listening to the radio.

**(Eject):** To eject one CD, press this button for less than two seconds. Then press the pushbutton number that corresponds to the loaded CD that you want to eject.

To eject all loaded CDs, press and hold this button for more than two seconds.

Eject may be activated with either the ignition or radio off. If you eject a CD, but decide that you want to listen to it, press the CD button. This will pull the CD back in and it will begin to play. If a CD is ejected, but not removed from the radio, the radio will automatically reload the CD, after 25 seconds, to prevent damage.

## Using an MP3 CD

### MP3 Format

The MP3 radio will play both standard audio CDs and CD-R or CD-RWs. The CD-R/RWs may contain either standard audio (*.cda) or compressed audio (*.mp3).

Customers who record their own music CD-R/RWs should be aware of the following:

- The files can be recorded on a CD-R/RW disc with a maximum capacity of 700 MB.
- The radio will play only compressed audio files recorded in the *.mp3 format. It also supports playlists that can be made and saved with popular MP3 software, in the *.m3u format. The directory, playlist, and song name must have no more than 64 characters combined, e.g. /DIRECTORY NAME/ PLAYLIST NAME/SONG NAME.MP3. If more than 64 characters are present, the radio will ignore that song and move to the next one.
- The radio will only play audio from a CD-R/RW, it cannot record audio.
  - The radio does not support DVD audio.
  - The radio does not support UNICODE.
- The radio will play a mixed mode CD-R/RW, one recorded with both *.cda and *.mp3 files.
- The radio supports multi-session discs, but only the files from the last session will be played.
- There are a total of 20 directories (folders) allowed on a CD. The file structure can be 4 directories deep (a folder within a folder, within a folder, etc.). Anything more than 20 directories will be ignored. Each directory may have up to 99 files contained within it. Files not having the *.mp3 extension will not be played, but still count toward the maximum. Anything more than the first 99 files within a directory will be ignored. A single CD may have up to 254 files and directories. Anything beyond the 254 limit will be ignored.
- MP3 files must be written to a CD-R/RW in one of the following industry-standard formats:
  - ISO 9660 Level 1
  - ISO 9660 Level 2
  - Joliet
  - Romeo
- ID3 tag information is displayed by the radio, if available. The ID3 tag information can be either version 1 or 2. The radio will display a filename, song name, artist name, album name, directory name, or playlist name.

If the customer does not follow these guidelines when recording a CD-R(W), the CD may not play in the radio.

## Playing an MP3

If you turn off the ignition or radio with a CD in the player, it will stay in the player. When you turn on the ignition or radio, the CD will start playing where it stopped, if it was the last selected audio source.

The CD player can play the smaller 8 cm or 3 inch single CDs with an adapter ring. Full-size CDs and the smaller CDs are loaded in the same manner. See your dealer for the appropriate adapter ring for your radio.

If playing a CD-R the sound quality may be reduced due to CD-R quality, the method of recording, the quality of the music that has been recorded and the way the CD-R has been handled. You may experience an increase in skipping, difficulty in finding tracks and/or difficulty in loading and ejecting. If these problems occur try a known good CD.

Do not add paper labels to CDs, they could get caught in the CD player.

If an error appears on the display, see “CD Messages” later in this section.

See “Playing the Single CD Player” and “Playing the Six-Disc CD Player” earlier to use any radio control, while playing an MP3, that is not listed here.

**1 (Previous):** Press this pushbutton to go to the start of the current track. If you hold this pushbutton or press it more than once, the player will continue moving backward through the current directory.

**2 (Next):** Press this pushbutton to go to the next track. If you hold this pushbutton or press it more than once, the player will continue moving forward through the current directory.

**4:** Press this pushbutton to enter playlist mode. Use the tune knob to cycle through the available playlists. Playlist X will appear on the display. Use the 1 and 2 pushbuttons to cycle through songs in a particular playlist. Press the 4 pushbutton again to exit playlist mode.

If a CD is a mixed mode, contains standard CD audio and MP3 compressed audio, the radio will assign the standard CD audio to a directory, which is listed as ROM audio directory.

**(Tune):** Turn this knob to quickly change tracks on the CD.

**(Information):** Press this button to see the elapsed time of the track and the current track time. To change the default on the display, (track name, artist name, album name, file name, or directory), press this button to scroll through each display. Once the desired display is shown, press and hold the RCL button for five seconds. The selected display will now be the default.

**CAT :** Press either arrow to change directories.

## CD Messages

If any error message appears on the display and the CD comes out, it could be for one of the following reasons:

- It is very hot. When the temperature returns to normal, the CD should play.
- You are driving on a very rough road. When the road becomes smooth, the CD should play.
- The CD is dirty, scratched, wet, or upside down.
- The air is very humid. If so, wait about an hour and try again.
- The format of the CD may not be compatible. See “MP3 Format” earlier for more information.
- There may have been a problem while burning the CD.
- The label may be caught in the CD player.

If the CD is not playing correctly, for any other reason, try a known good CD.

If any error occurs repeatedly or if an error cannot be corrected, contact your retailer. If your radio displays an error message, write it down and provide it to your retailer when reporting the problem.

## Radio Personalization

This radio has a personalization feature. You can change the following features:

**Clock Function:** You can change the time of the day displayed on the radio between 12 hour and 24 hour.

**Language:** This radio supports three languages: ENG (English), FRE (French), and SPA (Spanish). The only terms translated are the terms which are fixed in the display. Terms that are not translated include: MP3 ID3 tags, CD-TEXT information, RDS Text, and Satellite PDT information.

**Beep Level:** You can change the volume level of the radios beeps between Normal and Loud.

**CD Text:** You can change whether or not the radio displays CD text by choosing Text On or Text Off.

To change these features, do the following:

1. Press and hold the information button for five seconds.
2. Press either SEEK arrow to scroll through the features.
3. Once the feature is displayed, press either CAT or PTY arrow to change the setting.
4. Press the information button again to exit the menu.

## Theft-Deterrent Feature

The Radio with Single CD (MP3) and the Radio with Six-Disc CD (MP3) have a theft deterrent feature.

The theft deterrent feature is designed to discourage theft of your vehicle's radio. It works by using a secret code to disable all radio functions whenever battery power is interrupted.

The theft deterrent feature for the radio may be used or ignored. If ignored, the radio plays normally and the radio is not protected by the feature. If the theft deterrent feature is activated, the radio will not operate if stolen.

When the theft deterrent feature is activated. LOCK will appear on the radio display to indicate a locked condition anytime battery power has been removed. If the battery loses power for any reason, you must unlock the radio with the secret code before it will operate.

## Activating the Theft-Deterrent Feature

The instructions which follow explain how to enter your secret code to activate the theft deterrent feature. Read through all 10 steps before starting the procedure.

If you allow more than 15 seconds to elapse between any steps, the radio automatically reverts to time and you must start the procedure over at Step 4.

1. Write down any four-digit number from 0000 to 9999 and keep it in a safe place separate from the vehicle.
2. Turn the ignition to RUN.
3. Turn the radio off.
4. Press the 5 and 6 pushbuttons at the same time for five seconds. -- -- -- -- will appear on the display. Next you will use the secret code number which you have written down.
5. Press the SEEK/SCAN down or SEEK left arrow to make the first digit agree with your code.

6. Press the SEEK/SCAN up or SEEK right arrow to make the second digit agree with your code.
7. Press the TUNE down or AUTO EQ left arrow to make the third digit agree with your code.
8. Press the TUNE up or AUTO EQ right arrow to make the fourth digit agree with your code.
9. Press AM-FM after you have confirmed that the code matches the secret code you have written down. The display will prompt you to repeat Steps 5 through 8 to confirm your secret code.
10. Press AM-FM again. SEC or SECURITY ON will appear on the display to indicate that the radio is secure.

    If SEC or SECURITY ON does not appear on the display, but displays Err1, Err2, or LOCK, the theft deterrent feature is already set to another code. See “Disabling the Theft-Deterrent Feature” later in this section.

## Unlocking the Theft-Deterrent Feature After a Power Loss

Enter your secret code as follows; pause no more than 15 seconds between steps:

1. Turn the ignition on. -- -- -- -- will appear on the display.
2. Preform Steps 5 through 8 from the “Activating the Theft-Deterrent Feature” earlier to enter your secret code.
3. Press AM-FM after you have confirmed that the code matches the secret code you have written down. SEC or SECURITY ON will appear on the display, indicating the radio is now operable and secure.

If you enter the wrong code, the display will momentarily show an error message and all radio functions will continue to be disabled. If -- -- -- -- appears on the display, you can try to enter your secret code again.

If you enter the wrong code three times, LOCK will appear on the display. Contact your retailer. Your retailer is authorized to obtain the factory programmed code that is assigned to the radio to reset the system.

If you forget your code, if the theft deterrent feature is accidentally activated with an unknown code, or if the radio is in the locked mode, contact your retailer.

## Disabling the Theft-Deterrent Feature

Enter your secret code as follows; pause no more than 15 seconds between steps:

Preform Steps 1 through 9 from the “Activating the Theft-Deterrent Feature” earlier to enter your secret code. OFF will appear on the display indicating the theft deterrent feature is off.

If OFF or SECURITY OFF does not appear on the display, the wrong code was entered. If you enter the wrong code, the display will momentarily show an error message and all radio functions will continue to be disabled. If -- -- -- -- appears on the display, you can try to enter your secret code again.

If you enter the wrong code three times, LOCK will appear on the display. Contact your retailer. Your retailer is authorized to obtain the factory programmed code that is assigned to the radio to reset the system.

If you forget your code, if the theft deterrent feature is accidentally activated with an unknown code, or if the radio is in the locked mode, contact your retailer.

# Radio Reception

## AM

The range for most AM stations is greater than for FM, especially at night. The longer range can cause station frequencies to interfere with each other. Static can occur on AM stations caused by things like storms and power lines. Try reducing the treble to reduce this noise.

## FM Stereo

FM stereo will give the best sound, but FM signals will reach only about 10 to 40 miles (16 to 65 km). Tall buildings or hills can interfere with FM signals, causing the sound to fade in and out.

## XM™ Satellite Radio Service

XM™ Satellite Radio Service gives digital radio reception from coast to coast. Just as with FM, tall buildings or hills can interfere with satellite radio signals, causing the sound to fade in and out. The radio may display NO SIGNAL to indicate interference.

## Care of Your CDs

Handle CDs carefully. Store them in their original cases or other protective cases and away from direct sunlight and dust. If the surface of a CD is soiled, dampen a clean, soft cloth in a mild, neutral detergent solution and clean it, wiping from the center to the edge.

Be sure never to touch the side without writing when handling CDs. Pick up CDs by grasping the outer edges or the edge of the hole and the outer edge.

## Care of Your CD Player

The use of CD lens cleaners for CD players is not advised, due to the risk of contaminating the lens of the CD optics with lubricants internal to the CD mechanism.

## Fixed Mast Antenna

The fixed mast antenna can withstand most car washes without being damaged. If the mast should ever become slightly bent, straighten it out by hand. If the mast is badly bent, replace it.

Check occasionally to make sure the mast is still tightened to the antenna base located on the hood of the vehicle. If tightening is required, tighten by hand.

## XM™ Satellite Radio Antenna System

The XM™ Satellite Radio antenna is located on the roof of your vehicle. Keep this antenna clear of snow and ice build up for clear radio reception.

The performance of the XM™ system may be affected if the sunroof is open.

Loading items onto the roof of your vehicle can interfere with the performance of the XM™ system. Make sure that the XM™ satellite antenna is not obstructed.

## NOTES

# Section 4 Driving Your Vehicle


**Your Driving, the Road, and Your Vehicle** .....4-2
- Defensive Driving .....4-2
- Drunken Driving .....4-2
- Control of a Vehicle .....4-5
- Braking .....4-6
- Traction Control System (TCS) .....4-8
- Steering .....4-9
- Off-Road Recovery .....4-12
- Passing .....4-12
- Loss of Control .....4-14
- Driving at Night .....4-15
- Driving in Rain and on Wet Roads .....4-17
- City Driving .....4-20
- Freeway Driving .....4-21
- Before Leaving on a Long Trip .....4-22
- Highway Hypnosis .....4-23
- Hill and Mountain Roads .....4-24
- Winter Driving .....4-26
- If You Are Stuck: In Sand, Mud, Ice or Snow .....4-30

**Towing** .....4-31
- Towing Your Vehicle .....4-31
- Recreational Vehicle Towing .....4-31
- Loading Your Vehicle .....4-33
- Towing a Trailer .....4-39

# Your Driving, the Road, and Your Vehicle

## Defensive Driving

The best advice anyone can give about driving is: Drive defensively.

Please start with a very important safety device in your vehicle: Buckle up. See *Safety Belts: They Are for Everyone on page 1-8*.

Defensive driving really means “be ready for anything.” On city streets, rural roads or freeways, it means “always expect the unexpected.”

Assume that pedestrians or other drivers are going to be careless and make mistakes. Anticipate what they might do. Be ready for their mistakes.

Rear-end collisions are about the most preventable of accidents. Yet they are common. Allow enough following distance. It is the best defensive driving maneuver, in both city and rural driving. You never know when the vehicle in front of you is going to brake or turn suddenly.

Defensive driving requires that a driver concentrate on the driving task. Anything that distracts from the driving task — such as concentrating on a cellular telephone call, reading, or reaching for something on the floor — makes proper defensive driving more difficult and can even cause a collision, with resulting injury. Ask a passenger to help do things like this, or pull off the road in a safe place to do them yourself. These simple defensive driving techniques could save your life.

## Drunken Driving

Death and injury associated with drinking and driving is a national tragedy. It is the number one contributor to the highway death toll, claiming thousands of victims every year.

Alcohol affects four things that anyone needs to drive a vehicle:

- Judgment
- Muscular Coordination
- Vision
- Attentiveness.

Police records show that almost half of all motor vehicle-related deaths involve alcohol. In most cases, these deaths are the result of someone who was drinking and driving. In recent years, more than 16,000 annual motor vehicle-related deaths have been associated with the use of alcohol, with more than 300,000 people injured.

Many adults — by some estimates, nearly half the adult population — choose never to drink alcohol, so they never drive after drinking. For persons under 21, it is against the law in every U.S. state to drink alcohol. There are good medical, psychological and developmental reasons for these laws.

The obvious way to eliminate the leading highway safety problem is for people never to drink alcohol and then drive. But what if people do? How much is "too much" if someone plans to drive? It is a lot less than many might think. Although it depends on each person and situation, here is some general information on the problem.

The Blood Alcohol Concentration (BAC) of someone who is drinking depends upon four things:

- The amount of alcohol consumed
- The drinker's body weight
- The amount of food that is consumed before and during drinking
- The length of time it has taken the drinker to consume the alcohol.

According to the American Medical Association, a 180 lb (82 kg) person who drinks three 12 ounce (355 ml) bottles of beer in an hour will end up with a BAC of about 0.06 percent. The person would reach the same BAC by drinking three 4 ounce (120 ml) glasses of wine or three mixed drinks if each had 1-1/2 ounces (45 ml) of liquors like whiskey, gin or vodka.



It is the amount of alcohol that counts. For example, if the same person drank three double martinis (3 ounces or 90 ml of liquor each) within an hour, the person's BAC would be close to 0.12 percent. A person who consumes food just before or during drinking will have a somewhat lower BAC level.

There is a gender difference, too. Women generally have a lower relative percentage of body water than men. Since alcohol is carried in body water, this means that a woman generally will reach a higher BAC level than a man of her same body weight will when each has the same number of drinks.

The law in an increasing number of U.S. states, and throughout Canada, sets the legal limit at 0.08 percent. In some other countries, the limit is even lower. For example, it is 0.05 percent in both France and Germany. The BAC limit for all commercial drivers in the United States is 0.04 percent.

The BAC will be over 0.10 percent after three to six drinks (in one hour). Of course, as we have seen, it depends on how much alcohol is in the drinks, and how quickly the person drinks them.

But the ability to drive is affected well below a BAC of 0.10 percent. Research shows that the driving skills of many people are impaired at a BAC approaching 0.05 percent, and that the effects are worse at night. All drivers are impaired at BAC levels above 0.05 percent. Statistics show that the chance of being in a collision increases sharply for drivers who have a BAC of 0.05 percent or above. A driver with a BAC level of 0.06 percent has doubled his or her chance of having a collision. At a BAC level of 0.10 percent, the chance of this driver having a collision is 12 times greater; at a level of 0.15 percent, the chance is 25 times greater!

The body takes about an hour to rid itself of the alcohol in one drink. No amount of coffee or number of cold showers will speed that up. “I will be careful” is not the right answer. What if there is an emergency, a need to take sudden action, as when a child darts into the street? A person with even a moderate BAC might not be able to react quickly enough to avoid the collision.

There is something else about drinking and driving that many people do not know. Medical research shows that alcohol in a person's system can make crash injuries worse, especially injuries to the brain, spinal cord or heart. This means that when anyone who has been drinking — driver or passenger — is in a crash, that person's chance of being killed or permanently disabled is higher than if the person had not been drinking.

**⚠ CAUTION:**

**Drinking and then driving is very dangerous. Your reflexes, perceptions, attentiveness and judgment can be affected by even a small amount of alcohol. You can have a serious — or even fatal — collision if you drive after drinking. Please do not drink and drive or ride with a driver who has been drinking. Ride home in a cab; or if you are with a group, designate a driver who will not drink.**

## Control of a Vehicle

You have three systems that make your vehicle go where you want it to go. They are the brakes, the steering and the accelerator. All three systems have to do their work at the places where the tires meet the road.

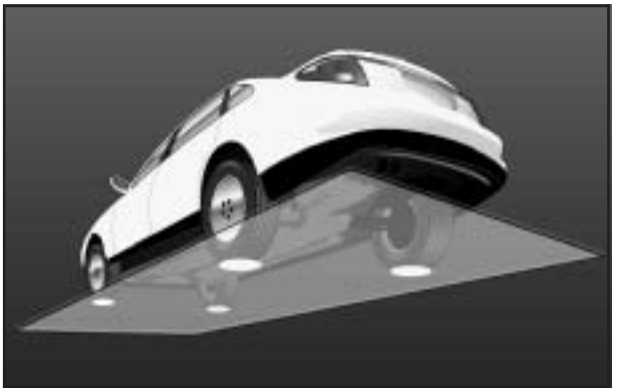

Sometimes, as when you are driving on snow or ice, it is easy to ask more of those control systems than the tires and road can provide. That means you can lose control of your vehicle. Also see *Traction Control System (TCS) on page 4-8*.

## Braking

Braking action involves *perception time* and *reaction time.*

First, you have to decide to push on the brake pedal. That is *perception time.* Then you have to bring up your foot and do it. That is *reaction time.*

Average *reaction time* is about 3/4 of a second. But that is only an average. It might be less with one driver and as long as two or three seconds or more with another. Age, physical condition, alertness, coordination and eyesight all play a part. So do alcohol, drugs and frustration. But even in 3/4 of a second, a vehicle moving at 60 mph (100 km/h) travels 66 feet (20 m). That could be a lot of distance in an emergency, so keeping enough space between your vehicle and others is important.

And, of course, actual stopping distances vary greatly with the surface of the road (whether it is pavement or gravel); the condition of the road (wet, dry, icy); tire tread; the condition of your brakes; the weight of the vehicle and the amount of brake force applied.

Avoid needless heavy braking. Some people drive in spurts — heavy acceleration followed by heavy braking — rather than keeping pace with traffic. This is a mistake. Your brakes may not have time to cool between hard stops. Your brakes will wear out much faster if you do a lot of heavy braking. If you keep pace with the traffic and allow realistic following distances, you will eliminate a lot of unnecessary braking. That means better braking and longer brake life.

If your engine ever stops while you are driving, brake normally but do not pump your brakes. If you do, the pedal may get harder to push down. If your engine stops, you will still have some power brake assist. But you will use it when you brake. Once the power assist is used up, it may take longer to stop and the brake pedal will be harder to push.

## Anti-lock Brake System (ABS)

Your vehicle may have anti-lock brakes. ABS is an advanced electronic braking system that will help prevent a braking skid.

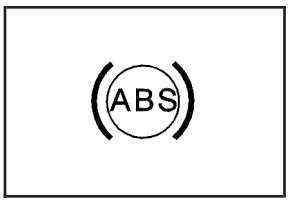


If your vehicle has anti-lock brakes, this warning light on the instrument panel will come on briefly when you start your vehicle.

When you start your engine, or when you begin to drive away, your anti-lock brake system will check itself. You may hear a momentary motor or clicking noise while this test is going on, and you may even notice that your brake pedal moves or pulses a little. This is normal.



Let us say the road is wet and you are driving safely. Suddenly, an animal jumps out in front of you. You slam on the brakes and continue braking.

Here is what happens with ABS:

A computer senses that wheels are slowing down. If one of the wheels is about to stop rolling, the computer will separately work the brakes at each wheel.

The anti-lock system can change the brake pressure faster than any driver could. The computer is programmed to make the most of available tire and road conditions. This can help you steer around the obstacle while braking hard.



As you brake, your computer keeps receiving updates on wheel speed and controls braking pressure accordingly.

Remember: Anti-lock does not change the time you need to get your foot up to the brake pedal or always decrease stopping distance. If you get too close to the vehicle in front of you, you will not have time to apply your brakes if that vehicle suddenly slows or stops. Always leave enough room up ahead to stop, even though you have anti-lock brakes.

### Using Anti-Lock

Do not pump the brakes. Just hold the brake pedal down firmly and let anti-lock work for you. You may feel a slight brake pedal pulsation or notice some noise, but this is normal.

## Braking in Emergencies

At some time, nearly every driver gets into a situation that requires hard braking.

If you have anti-lock, you can steer and brake at the same time. However, if you do not have anti-lock, your first reaction — to hit the brake pedal hard and hold it down — may be the wrong thing to do. Your wheels can stop rolling. Once they do, the vehicle can not respond to your steering. Momentum will carry it in whatever direction it was headed when the wheels stopped rolling. That could be off the road, into the very thing you were trying to avoid, or into traffic.

If you do not have anti-lock, use a “squeeze” braking technique. This will give you maximum braking while maintaining steering control. You can do this by pushing on the brake pedal with steadily increasing pressure.

In an emergency, you will probably want to squeeze the brakes hard without locking the wheels. If you hear or feel the wheels sliding, ease off the brake pedal. This will help you retain steering control. If you *do* have anti-lock, it is different. See “Anti-Lock Brake System” in this section.

In many emergencies, steering can help you more than even the very best braking.

## Traction Control System (TCS)

Your vehicle may have a traction control system that limits wheel spin. This is especially useful in slippery road conditions. The system operates only if it senses that one or both of the front wheels are spinning or beginning to lose traction. When this happens, the system works the front brakes and reduces engine power to limit wheel spin.

The LOW TRAC message will be displayed when the traction control system is limiting wheel spin. See *Low Traction Message on page 3-42*. You may feel or hear the system working, but this is normal.

If your vehicle is in cruise control when the traction control system begins to limit wheel spin, the cruise control will automatically disengage. When road conditions allow you to safely use it again, you may reengage the cruise control. See “Cruise Control” under *Turn Signal/Multifunction Lever on page 3-8*.

The traction control system automatically comes on whenever you start your vehicle. The light on the traction control button will also come on to let you know the system is on. To limit wheel spin, especially in slippery road conditions, you should always leave the system on. But you can turn the traction control system off if you ever need to. You should turn the system off if your vehicle ever gets stuck in sand, mud or snow and rocking the vehicle is required. See “Rocking Your Vehicle” under *If You Are Stuck: In Sand, Mud, Ice or Snow on page 4-30*.

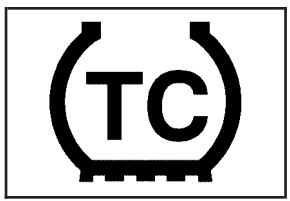


To turn the system off, press the traction control button with this symbol on it, located on the instrument panel switchbank.

If the system is limiting wheel spin when you press the button, the LOW TRAC message will go off, but the system will not turn off until there is no longer a current need to limit wheel spin. The TRAC OFF light will come on briefly to let you know the system has been turned off, and will not limit wheel spin. The light on the traction control button will also go off. Adjust your driving accordingly. You can turn the system back on at any time by pressing the button again.

# Steering

## Electric Power Steering

If the engine stalls while you are driving, the power steering assist system will continue to operate until you are able to stop the vehicle.

If you lose power steering assist because the engine stops or the system is not functioning, you can steer but it will take much more effort.

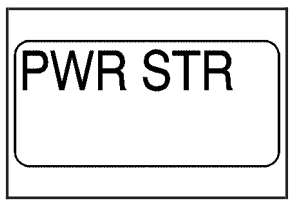


If you suspect steering problems and/or the PWR STR message is displayed, see your retailer for service and repair.

## Steering Tips

### Driving on Curves

It is important to take curves at a reasonable speed.

A lot of the “driver lost control” accidents mentioned on the news happen on curves. Here is why:

Experienced driver or beginner, each of us is subject to the same laws of physics when driving on curves. The traction of the tires against the road surface makes it possible for the vehicle to change its path when you turn the front wheels. If there is no traction, inertia will keep the vehicle going in the same direction. If you have ever tried to steer a vehicle on wet ice, you will understand this.

The traction you can get in a curve depends on the condition of your tires and the road surface, the angle at which the curve is banked, and your speed. While you are in a curve, speed is the one factor you can control.

Suppose you are steering through a sharp curve. Then you suddenly apply the brakes. Both control systems — steering and braking — have to do their work where the tires meet the road. Unless you have four-wheel anti-lock brakes, adding the hard braking can demand too much of those places. You can lose control.

The same thing can happen if you are steering through a sharp curve and you suddenly accelerate. Those two control systems — steering and acceleration — can overwhelm those places where the tires meet the road and make you lose control. See *Traction Control System (TCS) on page 4-8*.

What should you do if this ever happens? Ease up on the brake or accelerator pedal, steer the vehicle the way you want it to go, and slow down.

Speed limit signs near curves warn that you should adjust your speed. Of course, the posted speeds are based on good weather and road conditions. Under less favorable conditions you will want to go slower.

If you need to reduce your speed as you approach a curve, do it before you enter the curve, while your front wheels are straight ahead.

Try to adjust your speed so you can ”drive” through the curve. Maintain a reasonable, steady speed. Wait to accelerate until you are out of the curve, and then accelerate gently into the straightaway.

## Steering in Emergencies

There are times when steering can be more effective than braking. For example, you come over a hill and find a truck stopped in your lane, or a car suddenly pulls out from nowhere, or a child darts out from between parked cars and stops right in front of you. You can avoid these problems by braking — if you can stop in time. But sometimes you can not; there is not room. That is the time for evasive action — steering around the problem.

Your vehicle can perform very well in emergencies like these. First apply your brakes — but, unless you have anti-lock, not enough to lock your wheels.

See *Braking on page 4-6*. It is better to remove as much speed as you can from a possible collision. Then steer around the problem, to the left or right depending on the space available.

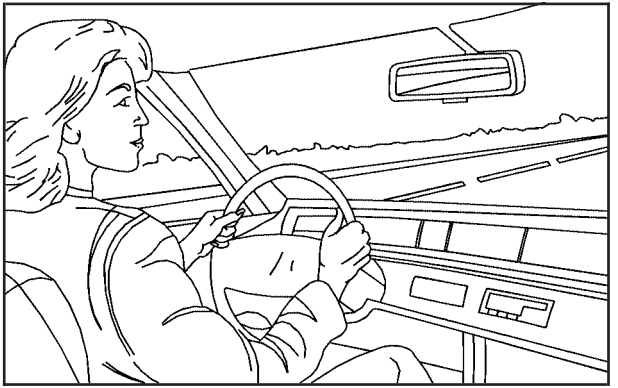

An emergency like this requires close attention and a quick decision. If you are holding the steering wheel at the recommended 9 and 3 o'clock positions, you can turn it a full 180 degrees very quickly without removing either hand. But you have to act fast, steer quickly, and just as quickly straighten the wheel once you have avoided the object.

The fact that such emergency situations are always possible is a good reason to practice defensive driving at all times and wear safety belts properly.

## Off-Road Recovery

You may find that your right wheels have dropped off the edge of a road onto the shoulder while you're driving.

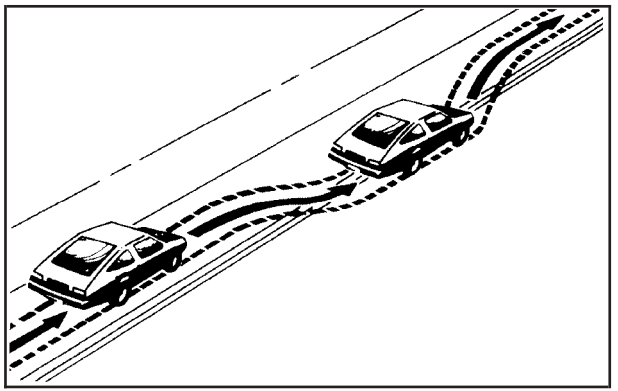

If the level of the shoulder is only slightly below the pavement, recovery should be fairly easy. Ease off the accelerator and then, if there is nothing in the way, steer so that your vehicle straddles the edge of the pavement. You can turn the steering wheel up to one-quarter turn until the right front tire contacts the pavement edge. Then turn your steering wheel to go straight down the roadway.

## Passing

The driver of a vehicle about to pass another on a two-lane highway waits for just the right moment, accelerates, moves around the vehicle ahead, then goes back into the right lane again. A simple maneuver?

Not necessarily! Passing another vehicle on a two-lane highway is a potentially dangerous move, since the passing vehicle occupies the same lane as oncoming traffic for several seconds. A miscalculation, an error in judgment, or a brief surrender to frustration or anger can suddenly put the passing driver face to face with the worst of all traffic accidents — the head-on collision.

So here are some tips for passing:

- "Drive ahead." Look down the road, to the sides and to crossroads for situations that might affect your passing patterns. If you have any doubt whatsoever about making a successful pass, wait for a better time.
- Watch for traffic signs, pavement markings and lines. If you can see a sign up ahead that might indicate a turn or an intersection, delay your pass. A broken center line usually indicates it is all right to pass (providing the road ahead is clear). Never cross a solid line on your side of the lane or a double solid line, even if the road seems empty of approaching traffic.

- Do not get too close to the vehicle you want to pass while you are awaiting an opportunity. For one thing, following too closely reduces your area of vision, especially if you are following a larger vehicle. Also, you will not have adequate space if the vehicle ahead suddenly slows or stops. Keep back a reasonable distance.
- When it looks like a chance to pass is coming up, start to accelerate but stay in the right lane and do not get too close. Time your move so you will be increasing speed as the time comes to move into the other lane. If the way is clear to pass, you will have a “running start” that more than makes up for the distance you would lose by dropping back. And if something happens to cause you to cancel your pass, you need only slow down and drop back again and wait for another opportunity.
- If other vehicles are lined up to pass a slow vehicle, wait your turn. But take care that someone is not trying to pass you as you pull out to pass the slow vehicle. Remember to glance over your shoulder and check the blind spot.
- Check your mirrors, glance over your shoulder, and start your left lane change signal before moving out of the right lane to pass. When you are far enough ahead of the passed vehicle to see its front in your inside mirror, activate your right lane change signal and move back into the right lane. (Remember that your right outside mirror is convex. The vehicle you just passed may seem to be farther away from you than it really is.)
- Try not to pass more than one vehicle at a time on two-lane roads. Reconsider before passing the next vehicle.
- Do not overtake a slowly moving vehicle too rapidly. Even though the brake lamps are not flashing, it may be slowing down or starting to turn.
- If you are being passed, make it easy for the following driver to get ahead of you. Perhaps you can ease a little to the right.

## Loss of Control

Let us review what driving experts say about what happens when the three control systems (brakes, steering and acceleration) do not have enough friction where the tires meet the road to do what the driver has asked.

In any emergency, do not give up. Keep trying to steer and constantly seek an escape route or area of less danger.

## Skidding

In a skid, a driver can lose control of the vehicle. Defensive drivers avoid most skids by taking reasonable care suited to existing conditions, and by not "overdriving" those conditions. But skids are always possible.

The three types of skids correspond to your vehicle's three control systems. In the braking skid, your wheels are not rolling. In the steering or cornering skid, too much speed or steering in a curve causes tires to slip and lose cornering force. And in the acceleration skid, too much throttle causes the driving wheels to spin.

A cornering skid is best handled by easing your foot off the accelerator pedal.

If you have the Traction Control System, remember: It helps avoid only the acceleration skid. If you do not have this system, or if the system is off, then an acceleration skid is also best handled by easing your foot off the accelerator pedal.

If your vehicle starts to slide, ease your foot off the accelerator pedal and quickly steer the way you want the vehicle to go. If you start steering quickly enough, your vehicle may straighten out. Always be ready for a second skid if it occurs.

Of course, traction is reduced when water, snow, ice, gravel or other material is on the road. For safety, you will want to slow down and adjust your driving to these conditions. It is important to slow down on slippery surfaces because stopping distance will be longer and vehicle control more limited.

While driving on a surface with reduced traction, try your best to avoid sudden steering, acceleration or braking (including engine braking by shifting to a lower gear). Any sudden changes could cause the tires to slide. You may not realize the surface is slippery until your vehicle is skidding. Learn to recognize warning clues — such as enough water, ice or packed snow on the road to make a “mirrored surface” — and slow down when you have any doubt.

If you have the anti-lock braking system, remember: It helps avoid only the braking skid. If you do not have anti-lock, then in a braking skid (where the wheels are no longer rolling), release enough pressure on the brakes to get the wheels rolling again. This restores steering control. Push the brake pedal down steadily when you have to stop suddenly. As long as the wheels are rolling, you will have steering control.

## Driving at Night

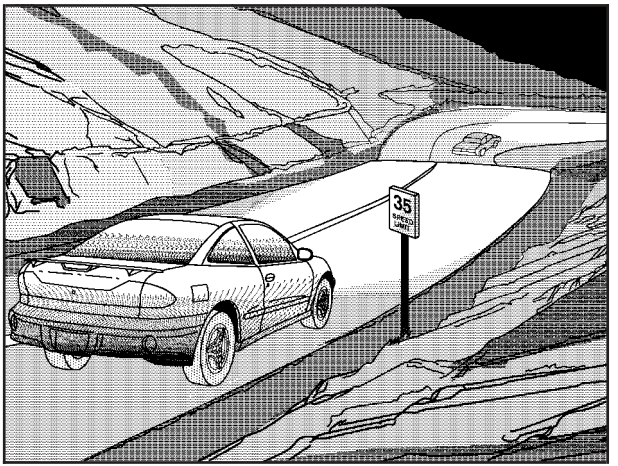


Night driving is more dangerous than day driving. One reason is that some drivers are likely to be impaired — by alcohol or drugs, with night vision problems, or by fatigue.

Here are some tips on night driving.

- Drive defensively.
- Do not drink and drive.
- Adjust your inside rearview mirror to reduce the glare from headlamps behind you.
- Since you can not see as well, you may need to slow down and keep more space between you and other vehicles.
- Slow down, especially on higher speed roads. Your headlamps can light up only so much road ahead.
- In remote areas, watch for animals.
- If you are tired, pull off the road in a safe place and rest.

No one can see as well at night as in the daytime. But as we get older these differences increase. A 50-year-old driver may require at least twice as much light to see the same thing at night as a 20-year-old.

What you do in the daytime can also affect your night vision. For example, if you spend the day in bright sunshine you are wise to wear sunglasses. Your eyes will have less trouble adjusting to night. But if you are driving, do not wear sunglasses at night. They may cut down on glare from headlamps, but they also make a lot of things invisible.

You can be temporarily blinded by approaching headlamps. It can take a second or two, or even several seconds, for your eyes to readjust to the dark. When you are faced with severe glare (as from a driver who does not lower the high beams, or a vehicle with misaimed headlamps), slow down a little. Avoid staring directly into the approaching headlamps.

Keep your windshield and all the glass on your vehicle clean — inside and out. Glare at night is made much worse by dirt on the glass. Even the inside of the glass can build up a film caused by dust. Dirty glass makes lights dazzle and flash more than clean glass would, making the pupils of your eyes contract repeatedly.

Remember that your headlamps light up far less of a roadway when you are in a turn or curve. Keep your eyes moving; that way, it is easier to pick out dimly lighted objects. Just as your headlamps should be checked regularly for proper aim, so should your eyes be examined regularly. Some drivers suffer from night blindness — the inability to see in dim light — and are not even aware of it.

## Driving in Rain and on Wet Roads

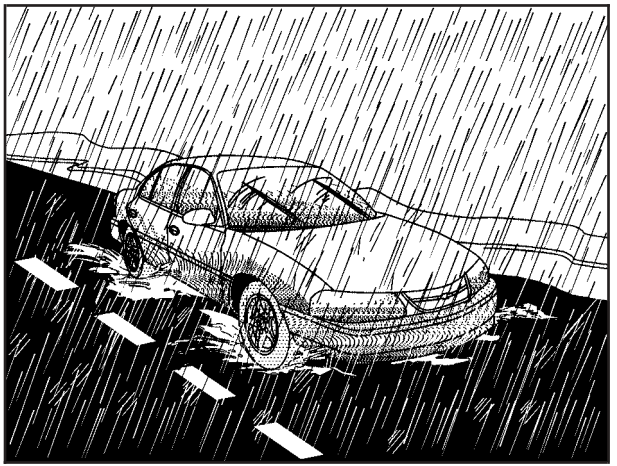

Rain and wet roads can mean driving trouble. On a wet road, you can not stop, accelerate or turn as well because your tire-to-road traction is not as good as on dry roads. And, if your tires do not have much tread left, you will get even less traction. It is always wise to go slower and be cautious if rain starts to fall while you are driving. The surface may get wet suddenly when your reflexes are tuned for driving on dry pavement.

The heavier the rain, the harder it is to see. Even if your windshield wiper blades are in good shape, a heavy rain can make it harder to see road signs and traffic signals, pavement markings, the edge of the road and even people walking.

It is wise to keep your windshield wiping equipment in good shape and keep your windshield washer tank filled with washer fluid. Replace your windshield wiper inserts when they show signs of streaking or missing areas on the windshield, or when strips of rubber start to separate from the inserts.

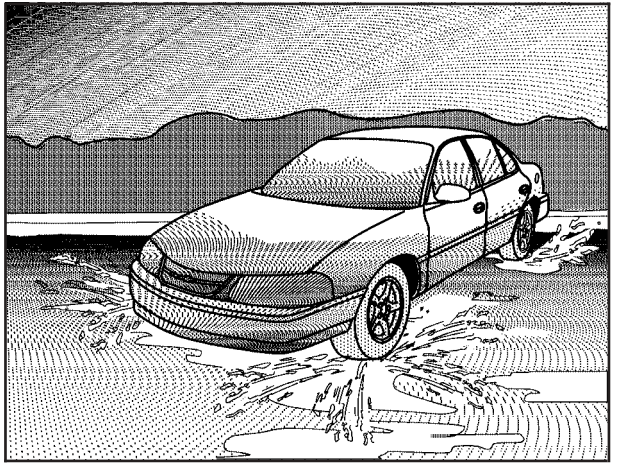

Driving too fast through large water puddles or even going through some car washes can cause problems, too. The water may affect your brakes. Try to avoid puddles. But if you can not, try to slow down before you hit them.

**⚠ CAUTION:**

**Wet brakes can cause accidents. They will not work as well in a quick stop and may cause pulling to one side. You could lose control of the vehicle.**

**After driving through a large puddle of water or a car wash, apply your brake pedal lightly until your brakes work normally.**

## Hydroplaning

Hydroplaning is dangerous. So much water can build up under your tires that they can actually ride on the water. This can happen if the road is wet enough and you are going fast enough. When your vehicle is hydroplaning, it has little or no contact with the road.

Hydroplaning does not happen often. But it can if your tires do not have much tread or if the pressure in one or more is low. It can happen if a lot of water is standing on the road. If you can see reflections from trees, telephone poles or other vehicles, and raindrops “dimple” the water’s surface, there could be hydroplaning.

Hydroplaning usually happens at higher speeds. There just is not a hard and fast rule about hydroplaning. The best advice is to slow down when it is raining.

## Driving Through Deep Standing Water

***Notice:*** **If you drive too quickly through deep puddles or standing water, water can come in through your engine’s air intake and badly damage your engine. Never drive through water that is slightly lower than the underbody of your vehicle. If you can not avoid deep puddles or standing water, drive through them very slowly.**

## Driving Through Flowing Water

**⚠ CAUTION:**

**Flowing or rushing water creates strong forces. If you try to drive through flowing water, as you might at a low water crossing, your vehicle can be carried away. As little as six inches of flowing water can carry away a smaller vehicle. If this happens, you and other vehicle occupants could drown. Do not ignore police warning signs, and otherwise be very cautious about trying to drive through flowing water.**

## Some Other Rainy Weather Tips

- Besides slowing down, allow some extra following distance. And be especially careful when you pass another vehicle. Allow yourself more clear room ahead, and be prepared to have your view restricted by road spray.
- Have good tires with proper tread depth. See *Tires on page 5-58*.

## City Driving



One of the biggest problems with city streets is the amount of traffic on them. You will want to watch out for what the other drivers are doing and pay attention to traffic signals.

Here are ways to increase your safety in city driving:

- Know the best way to get to where you are going. Get a city map and plan your trip into an unknown part of the city just as you would for a cross-country trip.
- Try to use the freeways that rim and crisscross most large cities. You will save time and energy. See *Freeway Driving on page 4-21*.
- Treat a green light as a warning signal. A traffic light is there because the corner is busy enough to need it. When a light turns green, and just before you start to move, check both ways for vehicles that have not cleared the intersection or may be running the red light.

## Freeway Driving



Mile for mile, freeways (also called thruways, parkways, expressways, turnpikes or superhighways) are the safest of all roads. But they have their own special rules.

The most important advice on freeway driving is: Keep up with traffic and keep to the right. Drive at the same speed most of the other drivers are driving. Too-fast or too-slow driving breaks a smooth traffic flow. Treat the left lane on a freeway as a passing lane.

At the entrance, there is usually a ramp that leads to the freeway. If you have a clear view of the freeway as you drive along the entrance ramp, you should begin to check traffic. Try to determine where you expect to blend with the flow. Try to merge into the gap at close to the prevailing speed. Switch on your turn signal, check your mirrors and glance over your shoulder as often as necessary. Try to blend smoothly with the traffic flow.

Once you are on the freeway, adjust your speed to the posted limit or to the prevailing rate if it is slower. Stay in the right lane unless you want to pass.

Before changing lanes, check your mirrors. Then use your turn signal.

Just before you leave the lane, glance quickly over your shoulder to make sure there is not another vehicle in your “blind” spot.

Once you are moving on the freeway, make certain you allow a reasonable following distance.

Expect to move slightly slower at night.

When you want to leave the freeway, move to the proper lane well in advance. If you miss your exit, do not, under any circumstances, stop and back up. Drive on to the next exit.

The exit ramp can be curved, sometimes quite sharply. The exit speed is usually posted. Reduce your speed according to your speedometer, not to your sense of motion. After driving for any distance at higher speeds, you may tend to think you are going slower than you actually are.

## Before Leaving on a Long Trip

Make sure you are ready. Try to be well rested. If you must start when you are not fresh — such as after a day’s work — do not plan to make too many miles that first part of the journey. Wear comfortable clothing and shoes you can easily drive in.

Is your vehicle ready for a long trip? If you keep it serviced and maintained, it is ready to go. If it needs service, have it done before starting out. Of course, you will find experienced and able service experts at Saturn retailers all across North America. They will be ready and willing to help if you need it.

Here are some things you can check before a trip:

- *Windshield Washer Fluid:* Is the reservoir full? Are all windows clean inside and outside?
- *Wiper Blades:* Are they in good shape?
- *Fuel, Engine Oil, Other Fluids:* Have you checked all levels?
- *Lamps:* Are they all working? Are the lenses clean?
- *Tires:* They are vitally important to a safe, trouble-free trip. Is the tread good enough for long-distance driving? Are the tires all inflated to the recommended pressure?
- *Weather Forecasts:* What is the weather outlook along your route? Should you delay your trip a short time to avoid a major storm system?
- *Maps:* Do you have up-to-date maps?

## Highway Hypnosis

Is there actually such a condition as “highway hypnosis”? Or is it just plain falling asleep at the wheel? Call it highway hypnosis, lack of awareness, or whatever.

There is something about an easy stretch of road with the same scenery, along with the hum of the tires on the road, the drone of the engine, and the rush of the wind against the vehicle that can make you sleepy. Do not let it happen to you! If it does, your vehicle can leave the road in *less than a second,* and you could crash and be injured.

What can you do about highway hypnosis? First, be aware that it can happen.

Then here are some tips:

- Make sure your vehicle is well ventilated, with a comfortably cool interior.
- Keep your eyes moving. Scan the road ahead and to the sides. Check your rearview mirrors and your instruments frequently.
- If you get sleepy, pull off the road into a rest, service or parking area and take a nap, get some exercise, or both. For safety, treat drowsiness on the highway as an emergency.

## Hill and Mountain Roads



Driving on steep hills or mountains is different from driving in flat or rolling terrain.

If you drive regularly in steep country, or if you are planning to visit there, here are some tips that can make your trips safer and more enjoyable.

- Keep your vehicle in good shape. Check all fluid levels and also the brakes, tires, cooling system and transaxle. These parts can work hard on mountain roads.
- Know how to go down hills. The most important thing to know is this: let your engine do some of the slowing down. Shift to a lower gear when you go down a steep or long hill.

**⚠ CAUTION:**

**If you do not shift down, your brakes could get so hot that they would not work well. You would then have poor braking or even none going down a hill. You could crash. Shift down to let your engine assist your brakes on a steep downhill slope.**

## ⚠ CAUTION:

**Coasting downhill in NEUTRAL (N) or with the ignition off is dangerous. Your brakes will have to do all the work of slowing down. They could get so hot that they would not work well. You would then have poor braking or even none going down a hill. You could crash. Always have your engine running and your vehicle in gear when you go downhill.**

- Know how to go uphill. You may want to shift down to a lower gear. The lower gears help cool your engine and transaxle, and you can climb the hill better.
- Stay in your own lane when driving on two-lane roads in hills or mountains. Do not swing wide or cut across the center of the road. Drive at speeds that let you stay in your own lane.
- As you go over the top of a hill, be alert. There could be something in your lane, like a stalled car or an accident.
- You may see highway signs on mountains that warn of special problems. Examples are long grades, passing or no-passing zones, a falling rocks area or winding roads. Be alert to these and take appropriate action.

## Winter Driving



Here are some tips for winter driving:

- Have your vehicle in good shape for winter.
- You may want to put winter emergency supplies in your trunk.

Also see *Tires on page 5-58*.



Include an ice scraper, a small brush or broom, a supply of windshield washer fluid, a rag, some winter outer clothing, a small shovel, a flashlight, a red cloth and a couple of reflective warning triangles. And, if you will be driving under severe conditions, include a small bag of sand, a piece of old carpet or a couple of burlap bags to help provide traction. Be sure you properly secure these items in your vehicle.

## Driving on Snow or Ice

Most of the time, those places where your tires meet the road probably have good traction.

However, if there is snow or ice between your tires and the road, you can have a very slippery situation. You will have a lot less traction or “grip” and will need to be very careful.

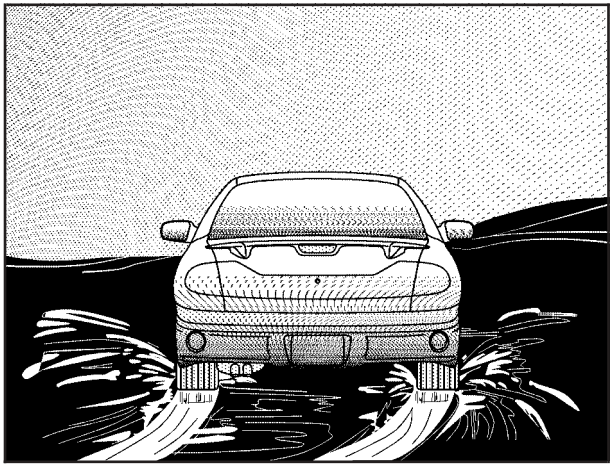

What is the worst time for this? “Wet ice.” Very cold snow or ice can be slick and hard to drive on. But wet ice can be even more trouble because it may offer the least traction of all. You can get wet ice when it is about freezing (32°F; 0°C) and freezing rain begins to fall. Try to avoid driving on wet ice until salt and sand crews can get there.

Whatever the condition — smooth ice, packed, blowing or loose snow — drive with caution.

If you have a traction control system, keep the system on. It will improve your ability to accelerate when driving on a slippery road. Even though your vehicle has this system, you will want to slow down and adjust your driving to the road conditions. See *Traction Control System (TCS) on page 4-8*.

If you do not have a traction control system, accelerate gently. Try not to break the fragile traction. If you accelerate too fast, the drive wheels will spin and polish the surface under the tires even more.

Unless you have the anti-lock braking system, you will want to brake very gently, too. If you do have anti-lock, see *Braking on page 4-6*. This system improves your vehicle's stability when you make a hard stop on a slippery road. Whether you have the anti-lock braking system or not, you will want to begin stopping sooner than you would on dry pavement. Without anti-lock brakes, if you feel your vehicle begin to slide, let up on the brakes a little. Push the brake pedal down steadily to get the most traction you can.

Remember, unless you have anti-lock, if you brake so hard that your wheels stop rolling, you will just slide. Brake so your wheels always keep rolling and you can still steer.

- Whatever your braking system, allow greater following distance on any slippery road.
- Watch for slippery spots. The road might be fine until you hit a spot that is covered with ice. On an otherwise clear road, ice patches may appear in shaded areas where the sun can not reach: around clumps of trees, behind buildings or under bridges. Sometimes the surface of a curve or an overpass may remain icy when the surrounding roads are clear. If you see a patch of ice ahead of you, brake before you are on it. Try not to brake while you are actually on the ice, and avoid sudden steering maneuvers.

## If You Are Caught in a Blizzard

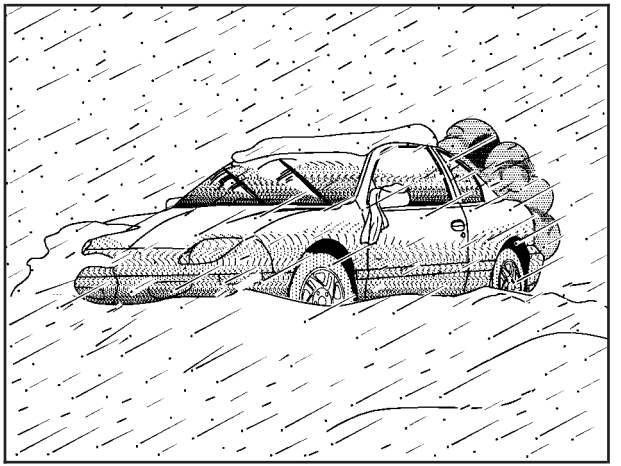

If you are stopped by heavy snow, you could be in a serious situation. You should probably stay with your vehicle unless you know for sure that you are near help and you can hike through the snow. Here are some things to do to summon help and keep yourself and your passengers safe:

- Turn on your hazard flashers.
- Tie a red cloth to your vehicle to alert police that you have been stopped by the snow.

- Put on extra clothing or wrap a blanket around you. If you have no blankets or extra clothing, make body insulators from newspapers, burlap bags, rags, floor mats — anything you can wrap around yourself or tuck under your clothing to keep warm.

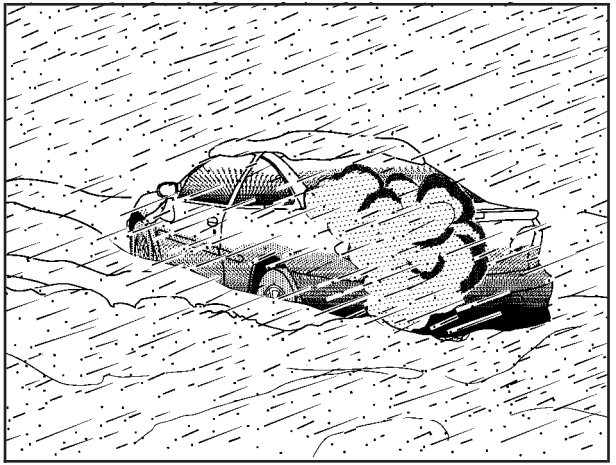

You can run the engine to keep warm, but be careful.

## ⚠ CAUTION:

**Snow can trap exhaust gases under your vehicle. This can cause deadly CO (carbon monoxide) gas to get inside. CO could overcome you and kill you. You can not see it or smell it, so you might not know it is in your vehicle. Clear away snow from around the base of your vehicle, especially any that is blocking your exhaust pipe. And check around again from time to time to be sure snow does not collect there.**

**Open a window just a little on the side of the vehicle that is away from the wind. This will help keep CO out.**

Run your engine only as long as you must. This saves fuel. When you run the engine, make it go a little faster than just idle. That is, push the accelerator slightly. This uses less fuel for the heat that you get and it keeps the battery charged. You will need a well-charged battery to restart the vehicle, and possibly for signaling later on with your headlamps. Let the heater run for a while.

Then, shut the engine off and close the window almost all the way to preserve the heat. Start the engine again and repeat this only when you feel really uncomfortable from the cold. But do it as little as possible. Preserve the fuel as long as you can. To help keep warm, you can get out of the vehicle and do some fairly vigorous exercises every half hour or so until help comes.

## If You Are Stuck: In Sand, Mud, Ice or Snow

In order to free your vehicle when it is stuck, you will need to spin the wheels, but you do not want to spin your wheels too fast. The method known as "rocking" can help you get out when you are stuck, but you must use caution.

**⚠ CAUTION:**

**If you let your tires spin at high speed, they can explode, and you or others could be injured. And, the transaxle or other parts of the vehicle can overheat. That could cause an engine**

**CAUTION: (Continued)**

**CAUTION: (Continued)**

**compartment fire or other damage. When you are stuck, spin the wheels as little as possible. Do not spin the wheels above 35 mph (55 km/h) as shown on the speedometer.**

***Notice:*** **Spinning your wheels can destroy parts of your vehicle as well as the tires. If you spin the wheels too fast while shifting your transaxle back and forth, you can destroy your transaxle. See "Rocking Your Vehicle To Get It Out."**

### Rocking Your Vehicle To Get It Out

First, turn your steering wheel left and right. That will clear the area around your front wheels. Then shift back and forth between REVERSE (R) and a forward gear (or with a manual transaxle, between FIRST (1) or SECOND (2) and REVERSE (R)), spinning the wheels as little as possible. Release the accelerator pedal while you shift, and press lightly on the accelerator pedal when the transaxle is in gear. By slowly spinning your wheels in the forward and reverse directions, you will cause a rocking motion that may free your vehicle. If that does not get you out after a few tries, you may need to be towed out. If you do need to be towed out, see *Towing Your Vehicle on page 4-31*.

### Vehicles Equipped with VTi Variable Transaxle

If you press too hard on the accelerator pedal, you may not be able to shift into DRIVE (D) or REVERSE (R). If this happens, release the accelerator pedal, then shift to the gear you want.

# Towing

## Towing Your Vehicle

Consult your dealer or a professional towing service if you need to have your disabled vehicle towed. See *Roadside Assistance Program on page 7-5*.

If you want to tow your vehicle behind another vehicle for recreational purposes (such as behind a motorhome), see “Recreational Vehicle Towing” following.

## Recreational Vehicle Towing

Recreational vehicle towing means towing your vehicle behind another vehicle – such as behind a motorhome. The two most common types of recreational vehicle towing are known as “dinghy towing” (towing your vehicle with all four wheels on the ground) and “dolly towing” (towing your vehicle with two wheels on the ground and two wheels up on a device known as a “dolly”).

With the proper preparation and equipment, many vehicles can be towed in these ways. See “Dinghy Towing” and “Dolly Towing” following in this section.

Here are some important things to consider before you do recreational vehicle towing:

- What’s the towing capacity of the towing vehicle? Be sure you read the tow vehicle manufacturer’s recommendations.
- How far will you tow? Some vehicles have restrictions on how far and how long they can tow.
- Do you have the proper towing equipment? See your dealer or trailering professional for additional advice and equipment recommendations.
- Is your vehicle ready to be towed? Just as you would prepare your vehicle for a long trip, you’ll want to make sure your vehicle is prepared to be towed. See *Before Leaving on a Long Trip on page 4-22*.

### Dinghy Towing (Five-Speed Automatic Transaxle and VTi Variable Transaxle)

Your vehicle was not designed to be towed with all four wheels on the ground. Your vehicle may be towed from the front with two of its wheels on the ground, or with car carrier equipment. See “Dolly Towing” later in this section.

## Dinghy Towing (Manual Transaxle)

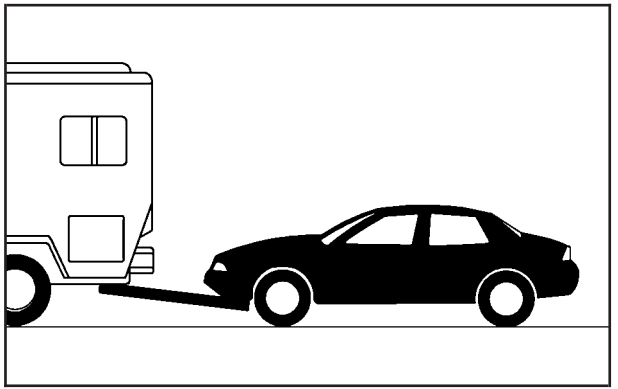

To tow your vehicle from the front with all four wheels on the ground, do the following:

1. Set the parking brake.
2. Turn the ignition key to ACC.
3. Shift your transaxle to NEUTRAL.
4. Locate and remove the IP BATT2 fuse from the engine compartment fuse block.
5. Release the parking brake.

Once you have reached your destination, be sure to replace the IP BATT2 fuse to its original location in the engine compartment fuse block.

***Notice:*** **Too much or too little fluid can damage the transaxle. Be sure that the transaxle fluid is at the proper level before towing with all four wheels on the ground.**

***Notice:*** **Don't tow a vehicle with the front drive wheels on the ground if one of the front tires is a compact spare tire. Towing with two different tire sizes on the front of the vehicle can cause severe damage to the transaxle.**

## Dolly Towing (All Transaxles)

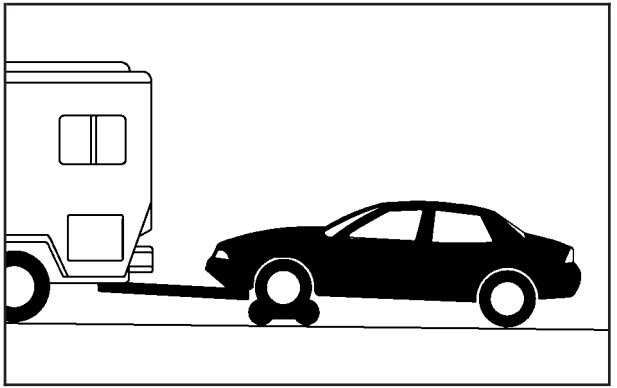

To tow your vehicle from the front with two wheels on the ground, do the following:

1. Put the front wheels on a dolly.
2. If you have a five-speed automatic transaxle or VTi variable transaxle, shift the transaxle to PARK (P). If you have a manual transaxle, shift the vehicle to SECOND (2).
3. Set the parking brake and then remove the key.
4. Clamp the steering wheel in a straight-ahead position with a clamping device designed for towing.
5. Release the parking brake.

## Loading Your Vehicle

It is very important to know how much weight your vehicle can carry. This weight is called the vehicle capacity weight and includes the weight of all occupants, cargo and all nonfactory-installed options. Two labels on your vehicle show how much weight it may properly carry, the Tire and Loading Information label and the Certification label.

**⚠ CAUTION:**

**Do not load your vehicle any heavier than the GVWR, or either the maximum front or rear GAWR. If you do, parts on your vehicle can break, and it can change the way your vehicle handles. These could cause you to lose control and crash. Also, overloading can shorten the life of your vehicle.**

## Tire and Loading Information Label

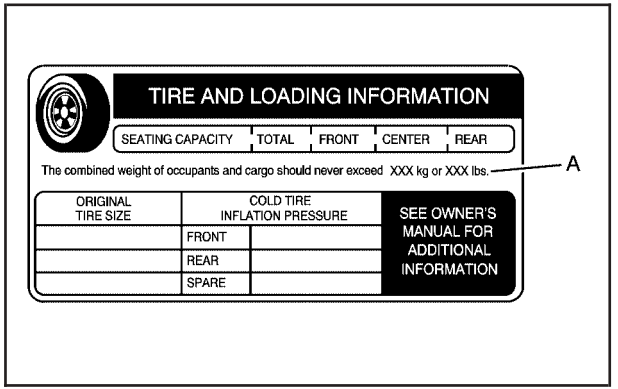


**Example 1**

A. Vehicle Capacity Weight

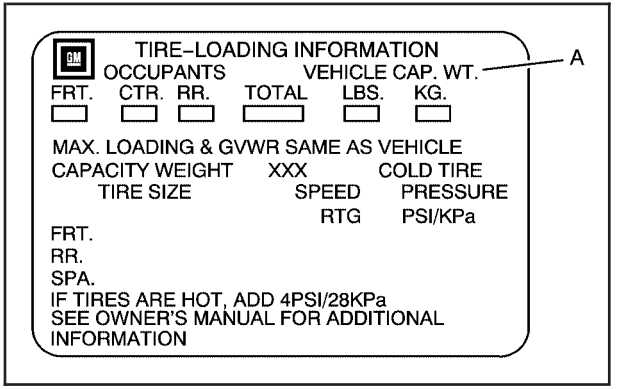


**Example 2**

A. Vehicle Capacity Weight

The Tire and Loading Information label shows the seating capacity and the total weight your vehicle can properly carry. This weight is called the vehicle capacity weight. If your vehicle has the Tire and Loading Information label, Example 1, the label is attached to the center pillar, near the driver's door latch. If your vehicle has the Tire-Loading Information label, Example 2, the label is attached to the inside door of your vehicle's glove box.

The Tire and Loading Information label also gives you the size and recommended inflation pressure for the factory-installed, original equipment tires on your vehicle. For more information on tires and inflation see *Tires on page 5-58* and *Inflation - Tire Pressure on page 5-66*.

There is also important loading information on the Certification label. It tells you the Gross Vehicle Weight Rating (GVWR) and the Gross Axle Weight Rating (GAWR) for the front and rear axle; see "Certification Label" later in this section.

## Steps for Determining Correct Load Limit

1. Locate the statement "The combined weight of occupants and cargo should never exceed XXX pounds" on your vehicle placard.
2. Determine the combined weight of the driver and passengers that will be riding in your vehicle.
3. Subtract the combined weight of the driver and passengers from XXX kilograms or XXX pounds.
4. The resulting figure equals the available amount of cargo and luggage load capacity. For example, if the "XXX" amount equals 1400 lbs. and there will be five 150 lb. passengers in your vehicle, the amount of available cargo and luggage load capacity is 650 lbs. (1400 – 750 (5 x 150) = 650 lbs.).
5. Determine the combined weight of luggage and cargo being loaded on the vehicle. That weight may not safely exceed the available cargo and luggage load capacity calculated in Step 4.
6. If your vehicle will be towing a trailer, the load from your trailer will be transferred to your vehicle. Consult this manual to determine how this reduces the available cargo and luggage load capacity of your vehicle.

If your vehicle can tow a trailer, see *Towing a Trailer on page 4-39*, for important information on towing a trailer, towing safety rules and trailering tips.

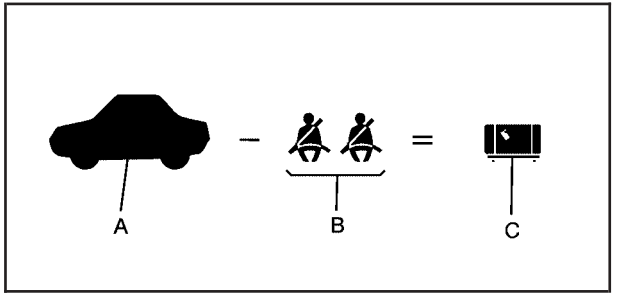


**Example 1**

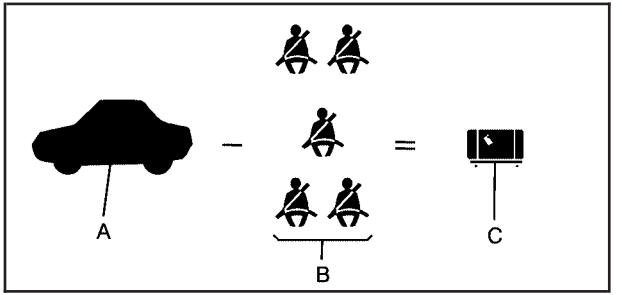


**Example 2**

## Loading Your Vehicle

| Item | Description | Total |
|---|---|---|
| A | Vehicle Capacity Weight for Example 1= | 1,000 lbs (453 kg) |
| B | Subtract Occupant Weight 150 lbs (68 kg) × 2 = | 300 lbs (136 kg) |
| C | Available Occupant and Cargo Weight = | 700 lbs (317 kg) |

## Loading Your Vehicle

| Item | Description | Total |
|---|---|---|
| A | Vehicle Capacity Weight for Example 2 = | 1,000 lbs (453 kg) |
| B | Subtract Occupant Weight 150 lbs (68 kg) × 5 = | 750 lbs (340 kg) |
| C | Available Occupant and Cargo Weight = | 250 lbs (113 kg) |

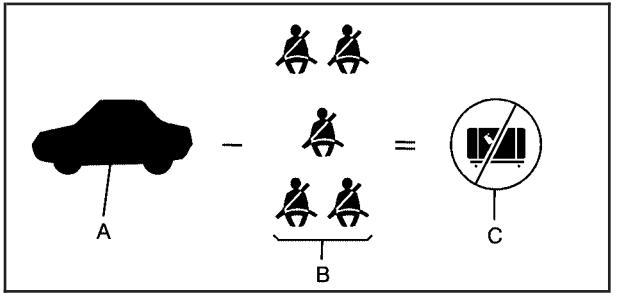


**Example 3**

## Loading Your Vehicle

| Item | Description | Total |
|---|---|---|
| A | Vehicle Capacity Weight for Example 3 = | 1,000 lbs (453 kg) |
| B | Subtract Occupant Weight 200 lbs (91 kg) × 5 = | 1,000 lbs (453 kg) |
| C | Available Occupant and Cargo Weight = | 0 lbs (0 kg) |

Refer to your vehicle's tire and loading information label for specific information about your vehicle's capacity weight and seating positions. The combined weight of the driver, passengers and cargo should never exceed your vehicle's capacity weight. Also see *Towing a Trailer on page 4-39*.

## Certification Label

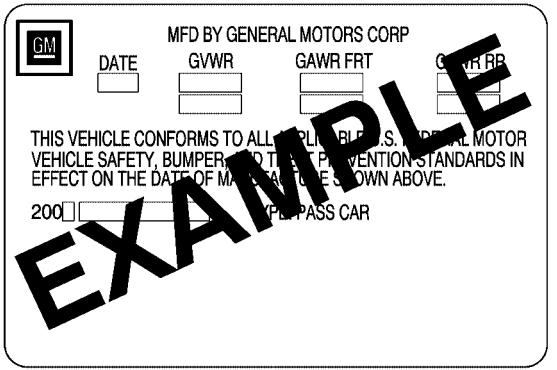


The Certification label is found on the rear edge of the driver's door. It tells you the gross weight capacity of your vehicle, called the Gross Vehicle Weight Rating (GVWR). The GVWR includes the weight of the vehicle, all occupants, fuel and cargo. Never exceed the GVWR for your vehicle or the Gross Axle Weight Rating (GAWR) for either the front or rear axle.

If you do have a heavy load, spread it out. Don't carry more than 167 pounds (75 kg) in your trunk.

**⚠ CAUTION:**

**Do not load your vehicle any heavier than the GVWR, or either the maximum front or rear GAWR. If you do, parts on your vehicle can break, and it can change the way your vehicle handles. These could cause you to lose control and crash. Also, overloading can shorten the life of your vehicle.**

***Notice:*** **Overloading your vehicle may cause damage. Repairs would not be covered by your warranty. Do not overload your vehicle.**

If you put things inside your vehicle — like suitcases, tools, packages or anything else — they will go as fast as the vehicle goes. If you have to stop or turn quickly, or if there is a crash, they'll keep going.

**⚠ CAUTION:**

**Things you put inside your vehicle can strike and injure people in a sudden stop or turn, or in a crash.**

- **Put things in the trunk of your vehicle. In a trunk, put them as far forward as you can. Try to spread the weight evenly.**
- **Never stack heavier things, like suitcases, inside the vehicle so that some of them are above the tops of the seats.**
- **Do not leave an unsecured child restraint in your vehicle.**
- **When you carry something inside the vehicle, secure it whenever you can.**
- **Do not leave a seat folded down unless you need to.**

## Towing a Trailer

**⚠ CAUTION:**

**If you do not use the correct equipment and drive properly, you can lose control when you pull a trailer. For example, if the trailer is too heavy, the brakes may not work well — or even at all. You and your passengers could be seriously injured. You may also damage your vehicle; the resulting repairs would not be covered by your warranty. Pull a trailer only if you have followed all the steps in this section. Ask your dealer for advice and information about towing a trailer with your vehicle.**

***Notice:*** **Pulling a trailer improperly can damage your vehicle and result in costly repairs not covered by your warranty. To pull a trailer correctly, follow the advice in this part and see your retailer for important information about towing a trailer with your vehicle.**

Your vehicle can tow a trailer if it is equipped with the proper trailer towing equipment. To identify what the vehicle trailering capacity is for your vehicle, you should read the information in “Weight of the Trailer” that appears later in this section. But trailering is different than just driving your vehicle by itself. Trailering means changes in handling, durability and fuel economy. Successful, safe trailering takes correct equipment, and it has to be used properly.

That’s the reason for this part. In it are many time-tested, important trailering tips and safety rules. Many of these are important for your safety and that of your passengers. So please read this section carefully before you pull a trailer.

Load-pulling components such as the engine, transmission, rear axle, wheel assemblies and tires are forced to work harder against the drag of the added weight. The engine is required to operate at relatively higher speeds and under greater loads, generating extra heat. What’s more, the trailer adds considerably to wind resistance, increasing the pulling requirements.

## If You Do Decide to Pull a Trailer

If you do, here are some important points:

- There are many different laws, including speed limit restrictions, having to do with trailering. Make sure your rig will be legal, not only where you live but also where you'll be driving. A good source for this information can be state or provincial police.
- Consider using a sway control. You can ask a hitch dealer about sway controls.
- Don't tow a trailer at all during the first 1000 miles (1600 km) your new vehicle is driven. Your engine, axle or other parts could be damaged. The repairs would not be covered by your warranty.
- Then, during the first 500 miles (805 km) that you tow a trailer, don't drive over 50 mph (80 km/h) and don't make starts at full throttle. This helps your engine and other parts of your vehicle wear in at the heavier loads.
- Obey speed limit restrictions when towing a trailer. Don't drive faster than the maximum posted speed for trailers, or no more than 55 mph (90 km/h), to save wear on your vehicle's parts.
- Don't tow a trailer when the outside temperature is above 100°F (38°C).

Three important considerations have to do with weight:

- the weight of the trailer,
- the weight of the trailer tongue
- and the total weight on your vehicle's tires.

## Weight of the Trailer

How heavy can a trailer safely be?

It should never weigh more than 1,000 lbs. (454 kg). But even that can be too heavy.

It depends on how you plan to use your rig. For example, speed, altitude, road grades, outside temperature and how much your vehicle is used to pull a trailer are all important. And, it can also depend on any special equipment that you have on your vehicle.

You can ask your retailer for trailering information or advice.

## Weight of the Trailer Tongue

The tongue load (A) of any trailer is an important weight to measure because it affects the total or gross weight of your vehicle. The Gross Vehicle Weight (GVW) includes the curb weight of the vehicle, any cargo you may carry in it, and the people who will be riding in the vehicle. And if you tow a trailer, you must add the tongue load to the GVW because your vehicle will be carrying that weight, too. See *Loading Your Vehicle on page 4-33* for more information about your vehicle's maximum load capacity.

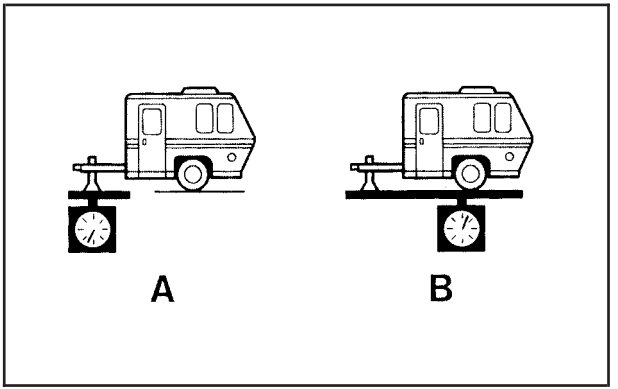


If you're using a weight-carrying hitch, the trailer tongue (A) should weigh 10 percent of the total loaded trailer weight (B). If you're using a weight-distributing hitch, the trailer tongue (A) should weigh 12 percent of the total loaded trailer weight (B).

After you've loaded your trailer, weigh the trailer and then the tongue, separately, to see if the weights are proper. If they aren't, you may be able to get them right simply by moving some items around in the trailer.

## Total Weight on Your Vehicle's Tires

Be sure your vehicle's tires are inflated to the upper limit for cold tires. You'll find these numbers on the Tire-Loading Information label, See *Loading Your Vehicle on page 4-33*. Then be sure you don't go over the GVW limit for your vehicle, including the weight of the trailer tongue.

## Hitches

It's important to have the correct hitch equipment. Crosswinds, large trucks going by and rough roads are a few reasons why you'll need the right hitch. Here are some rules to follow:

- The rear bumper on your vehicle is not intended for hitches. Do not attach rental hitches or other bumper-type hitches to it. Use only a frame-mounted hitch that does not attach to the bumper.
- Will you have to make any holes in the body of your vehicle when you install a trailer hitch? If you do, then be sure to seal the holes later when you remove the hitch. If you don't seal them, deadly carbon monoxide (CO) from your exhaust can get into your vehicle. See *Engine Exhaust on page 2-34*. Dirt and water can, too.

## Safety Chains

You should always attach chains between your vehicle and your trailer. Cross the safety chains under the tongue of the trailer so that the tongue will not drop to the road if it becomes separated from the hitch. Instructions about safety chains may be provided by the hitch manufacturer or by the trailer manufacturer. Follow the manufacturer's recommendation for attaching safety chains and do not attach them to the bumper. Always leave just enough slack so you can turn with your rig. And, never allow safety chains to drag on the ground.

## Trailer Brakes

If your vehicle has anti-lock brakes, don't try to tap into your vehicle's hydraulic brake system. If you do, both brake systems won't work well, or at all.

Be sure to read and follow the instructions for the trailer brakes, so you'll be able to install, adjust and maintain them properly.

## Driving with a Trailer

Towing a trailer requires a certain amount of experience. Before setting out for the open road, you'll want to get to know your rig. Acquaint yourself with the feel of handling and braking with the added weight of the trailer. And always keep in mind that the vehicle you are driving is now a good deal longer and not nearly as responsive as your vehicle is by itself.

Before you start, check the trailer hitch and platform (and attachments), safety chains, electrical connector, lamps, tires and mirror adjustment. If the trailer has electric brakes, start your vehicle and trailer moving and then apply the trailer brake controller by hand to be sure the brakes are working. This lets you check your electrical connection at the same time.

During your trip, check occasionally to be sure that the load is secure, and that the lamps and any trailer brakes are still working.

## Following Distance

Stay at least twice as far behind the vehicle ahead as you would when driving your vehicle without a trailer. This can help you avoid situations that require heavy braking and sudden turns.

## Passing

You'll need more passing distance up ahead when you're towing a trailer. And, because you're a good deal longer when towing a trailer, you'll need to go much farther beyond the passed vehicle before you can return to your lane.

## Backing Up

Hold the bottom of the steering wheel with one hand. Then, to move the trailer to the left, just move that hand to the left. To move the trailer to the right, move your hand to the right. Always back up slowly and, if possible, have someone guide you.

## Making Turns

***Notice:*** **Making very sharp turns while trailering could cause the trailer to come in contact with the vehicle. Your vehicle could be damaged. Avoid making very sharp turns while trailering.**

When you're turning with a trailer, make wider turns than normal. Do this so your trailer won't strike soft shoulders, curbs, road signs, trees or other objects. Avoid jerky or sudden maneuvers. Signal well in advance.

## Turn Signals When Towing a Trailer

When you tow a trailer, your vehicle may need a different turn signal flasher and/or extra wiring. See your retailer if you need information. The arrows on your instrument panel will flash whenever you signal a turn or lane change. Properly hooked up, the trailer lamps will also flash, telling other drivers you're about to turn, change lanes or stop.

When towing a trailer, the arrows on your instrument panel will flash for turns even if the bulbs on the trailer are burned out. Thus, you may think drivers behind you are seeing your signal when they are not. It's important to check occasionally to be sure the trailer bulbs are still working.

## Driving on Grades

***Notice:*** **Do not tow on steep continuous grades exceeding 6 miles (9.6 km). Extended, higher than normal engine and transaxle temperatures may result and damage your vehicle. Frequent stops are very important to allow the engine and transaxle to cool.**

Reduce speed and shift to a lower gear before you start down a long or steep downgrade. If you don't shift down, you might have to use your brakes so much that they would get hot and no longer work well.

On a long uphill grade, shift down and reduce your speed to around 45 mph (70 km/h) to reduce the possibility of the engine and the transmission overheating. If your engine does overheat, see *Engine Overheating on page 5-29*.

## Parking on Hills

**⚠ CAUTION:**

**You really should not park your vehicle, with a trailer attached, on a hill. If something goes wrong, your rig could start to move. People can be injured, and both your vehicle and the trailer can be damaged.**

But if you ever have to park your rig on a hill, here's how to do it:

1. Apply your regular brakes, but don't shift into PARK (P) for an automatic transaxle, or into gear for a manual transaxle.

   When parking uphill, turn your wheels away from the curb. When parking downhill, turn your wheels into the curb.
2. Have someone place chocks behind the trailer wheels.
3. When the chocks are in place, release the regular brakes until the chocks absorb the load.
4. Reapply the regular brakes. Then apply your parking brake and shift into PARK (P) for an automatic transaxle or REVERSE (R) for a manual transaxle.
5. Release the regular brakes.

## When You Are Ready to Leave After Parking on a Hill

1. Apply your regular brakes and hold the pedal down while you:
   - start your engine,
   - shift into a gear, and
   - release the parking brake.
2. Let up on the brake pedal.
3. Drive slowly until the trailer is clear of the chocks.
4. Stop and have someone pick up and store the chocks.

## Maintenance When Trailer Towing

Your vehicle will need service more often when you're pulling a trailer. See *Scheduled Maintenance on page 6-4* for more information. Things that are especially important in trailer operation are automatic transaxle fluid (don't overfill), engine oil, axle lubricant, drive belt, cooling system and brake system. Each of these is covered in this manual, and the Index will help you find them quickly. If you're trailering, it's a good idea to review this information before you start your trip.

Check periodically to see that all hitch nuts and bolts are tight.

## Engine Cooling When Trailer Towing

Your cooling system may temporarily overheat during severe operating conditions. See *Engine Overheating on page 5-29*.

## Changing a Tire When Trailer Towing

If you get a flat tire while towing a trailer, be sure to secure the trailer and disconnect it from the vehicle before changing the tire.

# Section 5 Service and Appearance Care


**Service** .....5-3
Doing Your Own Service Work .....5-4
Adding Equipment to the Outside of Your Vehicle .....5-4

**Fuel** .....5-5
Gasoline Octane .....5-5
Gasoline Specifications .....5-5
California Fuel .....5-6
Additives .....5-6
Fuels in Foreign Countries .....5-7
Filling Your Tank .....5-8
Filling a Portable Fuel Container .....5-9

**Checking Things Under the Hood** .....5-10
Hood Release .....5-10
Engine Compartment Overview .....5-12
Engine Oil .....5-15
Engine Air Cleaner/Filter .....5-22
Automatic Transaxle Fluid .....5-24
Manual Transaxle Fluid .....5-25
Hydraulic Clutch .....5-25
Engine Coolant .....5-26
Coolant Surge Tank Pressure Cap .....5-29
Engine Overheating .....5-29
Cooling System .....5-32
Windshield Washer Fluid .....5-37
Brakes .....5-38
Battery .....5-41
Jump Starting .....5-42

**Headlamp Aiming** .....5-47

**Bulb Replacement** .....5-48
Halogen Bulbs .....5-48
Headlamps (Sedan) .....5-48
Headlamps (Coupe) .....5-50
Front Turn Signal Lamps (Sedan) .....5-51
Front Turn Signal and Parking Lamps (Coupe) .....5-53
Fog Lamps .....5-53
Sidemarker Lamps (Coupe) .....5-54
Center High-Mounted Stoplamp (CHMSL) .....5-55
Taillamps, Stoplamps and Back-up Lamps .....5-55
Replacement Bulbs .....5-56

# Section 5 Service and Appearance Care


**Windshield Wiper Blade Replacement** .....5-57

**Tires** .....5-58
- Inflation - Tire Pressure .....5-66
- Tire Inspection and Rotation .....5-68
- When It Is Time for New Tires .....5-69
- Buying New Tires .....5-70
- Uniform Tire Quality Grading .....5-71
- Wheel Alignment and Tire Balance .....5-72
- Wheel Replacement .....5-72
- Tire Chains .....5-74
- If a Tire Goes Flat .....5-75
- Changing a Flat Tire .....5-76
- Compact Spare Tire .....5-86

**Appearance Care** .....5-87
- Cleaning the Inside of Your Vehicle .....5-87
- Care of Safety Belts .....5-89
- Weatherstrips .....5-90
- Cleaning the Outside of Your Vehicle .....5-90
- Sheet Metal Damage .....5-92
- Finish Damage .....5-92
- Underbody Maintenance .....5-92
- Chemical Paint Spotting .....5-92
- Vehicle Care/Appearance Materials .....5-93

**Vehicle Identification** .....5-94
- Vehicle Identification Number (VIN) .....5-94
- Service Parts Identification Label .....5-94

**Electrical System** .....5-95
- Add-On Electrical Equipment .....5-95
- Windshield Wiper Fuses .....5-95
- Power Windows and Other Power Options .....5-95
- Fuses and Circuit Breakers .....5-95

**Capacities and Specifications** .....5-102

# Service

Your Saturn retailer knows your vehicle best and wants you to be happy with it. We hope you will go to your retailer for all your service needs. You will get genuine Saturn parts and Saturn-trained and supported service people.

We hope you will want to keep your Saturn vehicle all Saturn.

Genuine Saturn parts have one of these marks.

ACDelco®

SATURN®

## California Proposition 65 Warning

Most motor vehicles, including this one, contain and/or emit chemicals known to the State of California to cause cancer and birth defects or other reproductive harm. Engine exhaust, many parts and systems (including some inside the vehicle), many fluids, and some component wear by-products contain and/or emit these chemicals.

## Doing Your Own Service Work

If you want to do some of your own service work, you will want to use the proper service manual. It tells you much more about how to service your vehicle than this manual can. To order the proper service manual, see *Service Publications Ordering Information on page 7-10*.

Your vehicle has an air bag system. Before attempting to do your own service work, see *Servicing Your Air Bag-Equipped Vehicle on page 1-58*.

You should keep a record with all parts receipts and list the mileage and the date of any service work you perform. See *Maintenance Record on page 6-18*.

**⚠ CAUTION:**

**You can be injured and your vehicle could be damaged if you try to do service work on a vehicle without knowing enough about it.**

**CAUTION: (Continued)**

**CAUTION: (Continued)**

- **Be sure you have sufficient knowledge, experience, the proper replacement parts and tools before you attempt any vehicle maintenance task.**
- **Be sure to use the proper nuts, bolts and other fasteners. “English” and “metric” fasteners can be easily confused. If you use the wrong fasteners, parts can later break or fall off. You could be hurt.**

## Adding Equipment to the Outside of Your Vehicle

Things you might add to the outside of your vehicle can affect the airflow around it. This may cause wind noise and affect windshield washer performance. Check with your retailer before adding equipment to the outside of your vehicle.

# Fuel

Use of the recommended fuel is an important part of the proper maintenance of your vehicle.

## Gasoline Octane

If your vehicle has the 2.2L L4 engine, use regular unleaded gasoline with a posted octane of 87 or higher. If the octane is less than 87, you may get a heavy knocking noise when you drive. If this occurs, use a gasoline rated at 87 octane or higher as soon as possible. Otherwise, you might damage your engine. A little pinging noise when you accelerate or drive uphill is considered normal. This does not indicate a problem exists or that a higher-octane fuel is necessary. If you are using 87 octane or higher-octane fuel and hear heavy knocking, your engine needs service.

If your vehicle has the 2.0L Supercharged engine, use premium unleaded gasoline with a posted octane of 91 or higher for best performance. You may also use middle grade or regular unleaded gasoline rated at 87 octane or higher, but your vehicle's acceleration may be slightly reduced. If the octane is less than 87, you may get a heavy knocking noise when you drive. If this occurs, use a gasoline rated at 87 octane or higher as soon as possible. Otherwise, you might damage your engine.

## Gasoline Specifications

It is recommended that gasoline meet specifications which were developed by automobile manufacturers around the world and contained in the World-Wide Fuel Charter which is available from the Alliance of Automobile Manufacturers at www.autoalliance.org/fuel_charter.htm. Gasoline meeting these specifications could provide improved driveability and emission control system performance compared to other gasoline.



**Canada Only**

In Canada, look for the "Auto Makers' Choice" label on the pump.

## California Fuel

If your vehicle is certified to meet California Emission Standards (see the underhood emission control label), it is designed to operate on fuels that meet California specifications. If this fuel is not available in states adopting California emissions standards, your vehicle will operate satisfactorily on fuels meeting federal specifications, but emission control system performance may be affected. The malfunction indicator lamp may turn on (see *Malfunction Indicator Lamp on page 3-36* ) and your vehicle may fail a smog-check test. If this occurs, return to your authorized Saturn retailer for diagnosis. If it is determined that the condition is caused by the type of fuel used, repairs may not be covered by your warranty.

## Additives

To provide cleaner air, all gasolines in the United States are now required to contain additives that will help prevent engine and fuel system deposits from forming, allowing your emission control system to work properly. You should not have to add anything to your fuel. However, some gasolines contain only the minimum amount of additive required to meet U.S. Environmental Protection Agency regulations. General Motors recommends that you buy gasolines that are advertised to help keep fuel injectors and intake valves clean. If your vehicle experiences problems due to dirty injectors or valves, try a different brand of gasoline.

Gasolines containing oxygenates, such as ethers and ethanol, and reformulated gasolines may be available in your area to contribute to clean air. General Motors recommends that you use these gasolines, particularly if they comply with the specifications described earlier.

***Notice:*** **Your vehicle was not designed for fuel that contains methanol. Do not use fuel containing methanol. It can corrode metal parts in your fuel system and also damage the plastic and rubber parts. That damage would not be covered under your warranty.**

Some gasolines that are not reformulated for low emissions may contain an octane-enhancing additive called methylcyclopentadienyl manganese tricarbonyl (MMT); ask the attendant where you buy gasoline whether the fuel contains MMT. General Motors does not recommend the use of such gasolines. Fuels containing MMT can reduce the life of spark plugs and the performance of the emission control system may be affected. The malfunction indicator lamp may turn on. If this occurs, return to your authorized Saturn retailer for service.

## Fuels in Foreign Countries

If you plan on driving in another country outside the United States or Canada, the proper fuel may be hard to find. Never use leaded gasoline or any other fuel not recommended in the previous text on fuel. Costly repairs caused by use of improper fuel would not be covered by your warranty.

To check the fuel availability, ask an auto club, or contact a major oil company that does business in the country where you will be driving.

## Filling Your Tank



**⚠ CAUTION:**

**Fuel vapor burns violently and a fuel fire can cause bad injuries. To help avoid injuries to you and others, read and follow all the instructions on the pump island. Turn off your engine when**

**CAUTION: (Continued)**

**CAUTION: (Continued)**

**you are refueling. Do not smoke if you are near fuel or refueling your vehicle. Keep sparks, flames and smoking materials away from fuel. Do not leave the fuel pump unattended when refueling your vehicle — this is against the law in some places. Keep children away from the fuel pump; never let children pump fuel.**

The fuel filler cap is located behind a hinged door on the passenger's side of your vehicle. It is tethered to the door to prevent loss while refueling. Make sure that water, snow, and dirt are kept away from the filler cap and filler pipe nozzle.

To remove the fuel cap, turn it slowly to the left (counterclockwise). It will require about 1/2 of a turn to remove the cap. The fuel cap has a spring in it; if you let go of the cap too soon, it will spring back to the right (clockwise).

**⚠ CAUTION:**

**If you get fuel on yourself and then something ignites it, you could be badly burned. Fuel can spray out on you if you open the fuel cap too quickly. This spray can happen if your tank is nearly full, and is more likely in hot weather. Open the fuel cap slowly and wait for any "hiss" noise to stop. Then unscrew the cap all the way.**

Be careful not to spill fuel. Clean fuel from painted surfaces as soon as possible. See *Cleaning the Outside of Your Vehicle on page 5-90*.

When you put the fuel cap back on, turn it to the right (clockwise) about 1/4 of a turn until you hear three clicks. Make sure you fully install the cap. The diagnostic system can determine if the fuel cap has been left off or improperly installed. This would allow fuel to evaporate into the atmosphere and may cause the malfunction indicator lamp to come on. See *Malfunction Indicator Lamp on page 3-36*.

***Notice:*** **If you need a new fuel cap, be sure to get the right type. Your dealer can get one for you. If you get the wrong type, it may not fit properly. This may cause your malfunction indicator lamp to light and may damage your fuel tank and emissions system. See *Malfunction Indicator Lamp on page 3-36*.**

## Filling a Portable Fuel Container

**⚠ CAUTION:**

**Never fill a portable fuel container while it is in your vehicle. Static electricity discharge from the container can ignite the gasoline vapor. You can be badly burned and your vehicle damaged if this occurs. To help avoid injury to you and others:**

- **Dispense gasoline only into approved containers.**
- **Do not fill a container while it is inside a vehicle, in a vehicle's trunk, pickup bed or on any surface other than the ground.**
- **Bring the fill nozzle in contact with the inside of the fill opening before operating the nozzle. Contact should be maintained until the filling is complete.**
- **Do not smoke while pumping gasoline.**

# Checking Things Under the Hood

**⚠ CAUTION:**

**An electric fan under the hood can start up and injure you even when the engine is not running. Keep hands, clothing and tools away from any underhood electric fan.**

**⚠ CAUTION:**

**Things that burn can get on hot engine parts and start a fire. These include liquids like fuel, oil, coolant, brake fluid, windshield washer and other fluids, and plastic or rubber. You or others could be burned. Be careful not to drop or spill things that will burn onto a hot engine.**

## Hood Release

To open the hood, do the following:



1. Pull the handle located inside the vehicle.



2. Then go to the front of the vehicle and push the hood release latch to the side.



3. Lift the hood, release the hood prop from its retainer and put the hood prop into the slot in the hood.

Before closing the hood, be sure all the filler caps are on properly. Then lift the hood to relieve pressure on the hood prop. Remove the hood prop from the slot in the hood and return the prop to its retainer. Then just let the hood down and close it firmly.

## Engine Compartment Overview

When you open the hood on 2.2L L4 engine, you'll see the following:

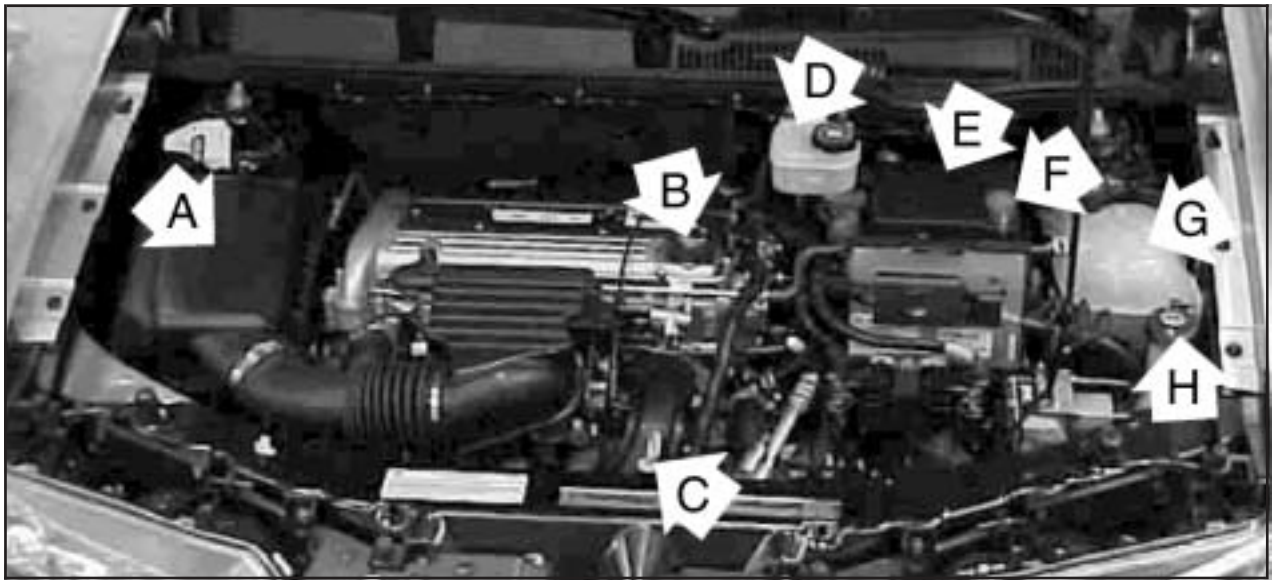

A. Engine Air Cleaner/Filter. See *Engine Air Cleaner/Filter on page 5-22*.

B. Engine Oil Fill Location. See *Engine Oil on page 5-15*.

C. Engine Oil Dipstick Location. See *Engine Oil on page 5-15*.

D. Brake Master Cylinder. See *Brakes on page 5-38* and *Hydraulic Clutch on page 5-25*.

E. Remote Positive Terminal Location. See *Jump Starting on page 5-42*.

F. Engine Compartment Fuse Block. See *Fuses and Circuit Breakers on page 5-95*.

G. Surge Tank. See *Engine Coolant on page 5-26*.

H. Windshield Washer Fluid Reservoir. See *Windshield Washer Fluid on page 5-37*.

Before closing the hood, be sure all filler caps are on properly.

When you open the hood on 2.0L Supercharged engine, you'll see the following:

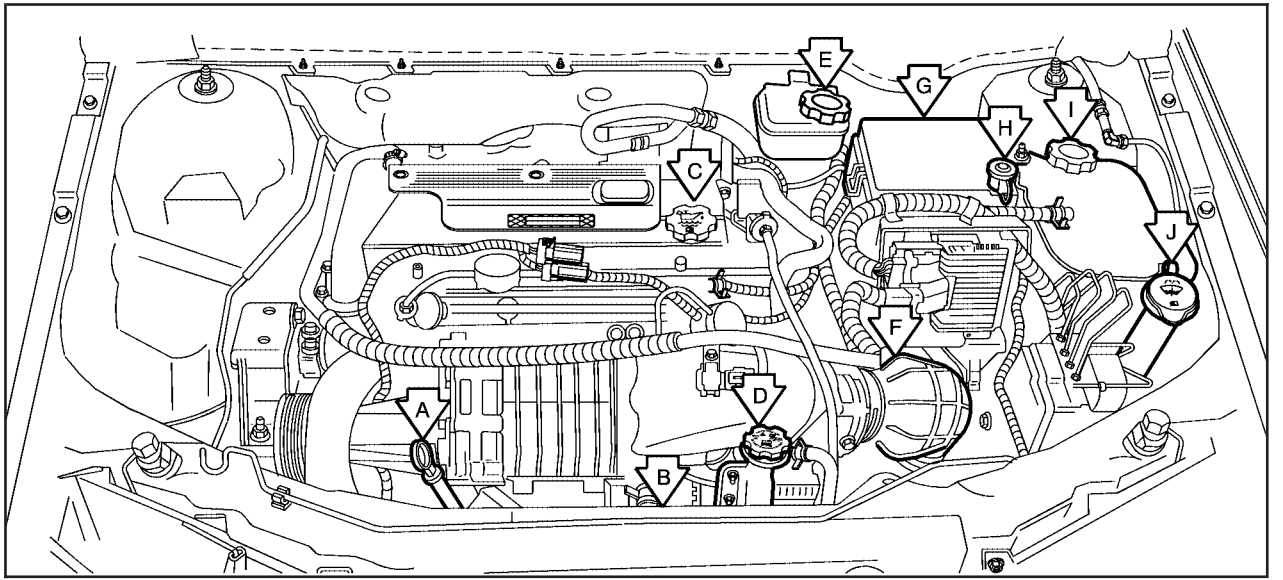

A. Engine Oil Dipstick Location. See *Engine Oil on page 5-15*.

B. Electric Cooling Fan. See *Cooling System on page 5-32.*

C. Engine Oil Fill Location. See *Engine Oil on page 5-15*.

D. Radiator Pressure Cap. See *Engine Coolant on page 5-26.*

E. Brake Master Cylinder. See *Brakes on page 5-38* and *Hydraulic Clutch on page 5-25*.

F. Engine Air Cleaner/Filter. See *Engine Air Cleaner/Filter on page 5-22*.

G. Engine Compartment Fuse Block. See *Fuses and Circuit Breakers on page 5-95*.

H. Remote Positive Terminal Location. See *Jump Starting on page 5-42*.

I. Surge Tank. See *Coolant Surge Tank Pressure Cap on page 5-29*.

J. Windshield Washer Fluid Reservoir. See *Windshield Washer Fluid on page 5-37*.

Before closing the hood, be sure all filler caps are on properly.

# Engine Oil

## Checking Engine Oil

It is a good idea to check your engine oil every time you get fuel. In order to get an accurate reading, the oil must be warm and the vehicle must be on level ground.

The engine oil dipstick handle is a yellow loop. See *Engine Compartment Overview on page 5-12* for the location of the engine oil dipstick.

Turn off the engine and give the oil several minutes to drain back into the oil pan. If you don't, the oil dipstick might not show the actual level.

Pull out the dipstick and clean it with a paper towel or cloth, then push it back in all the way. Remove it again, keeping the tip down, and check the level.



## When to Add Engine Oil

If the oil is at or below the MIN mark, then you will need to add at least one quart of oil. But you must use the right kind. This section explains what kind of oil to use. For engine oil crankcase capacity, see *Capacities and Specifications on page 5-102*.

***Notice:*** **Do not add too much oil. If your engine has so much oil that the oil level gets above the upper mark that shows the proper operating range, your engine could be damaged.**




**2.2L L4 Engine**

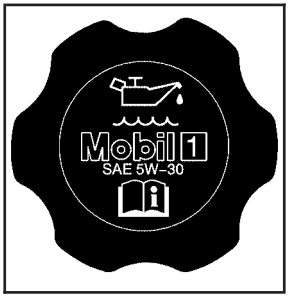


**2.0L Supercharged Engine**

See *Engine Compartment Overview on page 5-12* for the location of the engine oil fill cap.

Be sure to add enough oil to put the level somewhere in the proper operating range. Push the dipstick all the way back in when you are through.

## What Kind of Engine Oil to Use

### For Vehicles With the 2.2L L4 Engine Only

Look for two things:

- GM6094M

  Your vehicle's engine requires oil meeting GM Standard GM6094M. You should look for and use only an oil that meets GM Standard GM6094M.

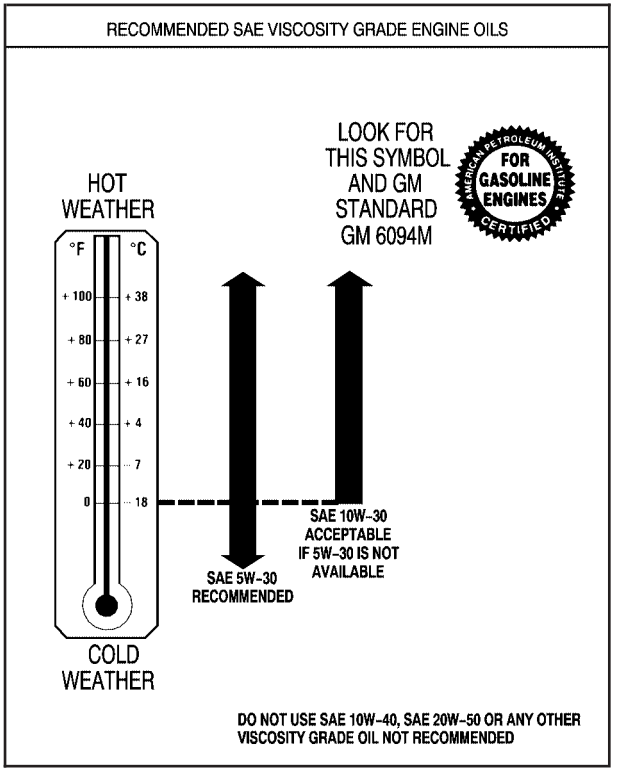


- SAE 5W-30

  As shown in the viscosity chart, SAE 5W-30 is best for your vehicle. However, if it is going to be 0°F (–18°C) or above and SAE 5W-30 is not available, you may use SAE 10W-30.

  These numbers on an oil container show its viscosity, or thickness. Do not use other viscosity oils such as SAE 20W-50.

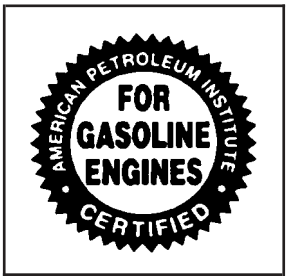


Oils meeting these requirements should also have the starburst symbol on the container. This symbol indicates that the oil has been certified by the American Petroleum Institute (API).

You should look for this information on the oil container, and use *only* those oils that are identified as meeting GM Standard GM6094M and have the starburst symbol on the front of the oil container.

***Notice:*** **Use only engine oil identified as meeting GM Standard GM6094M and showing the American Petroleum Institute Certified For Gasoline Engines starburst symbol. Failure to use the recommended oil can result in engine damage not covered by your warranty.**

GM Goodwrench oil meets all the requirements for your vehicle.

If you are in an area of extreme cold, where the temperature falls below –20°F (–29°C), it is recommended that you use either an SAE 5W-30 synthetic oil or an SAE 0W-30 oil. Both will provide easier cold starting and better protection for your engine at extremely low temperatures.

## For Vehicles with the 2.0L Supercharged Engine Only

Look for two things:

- GM4718M

  Your vehicle's engine requires a special oil meeting GM Standard GM4718M. Oils meeting this standard may be identified as synthetic. However, not all *synthetic* oils will meet this GM standard. You should look for and use only an oil that meets GM Standard GM4718M.

***Notice:*** **If you use oils that do not have the GM4718M Standard designation, you can cause engine damage not covered by your warranty.**

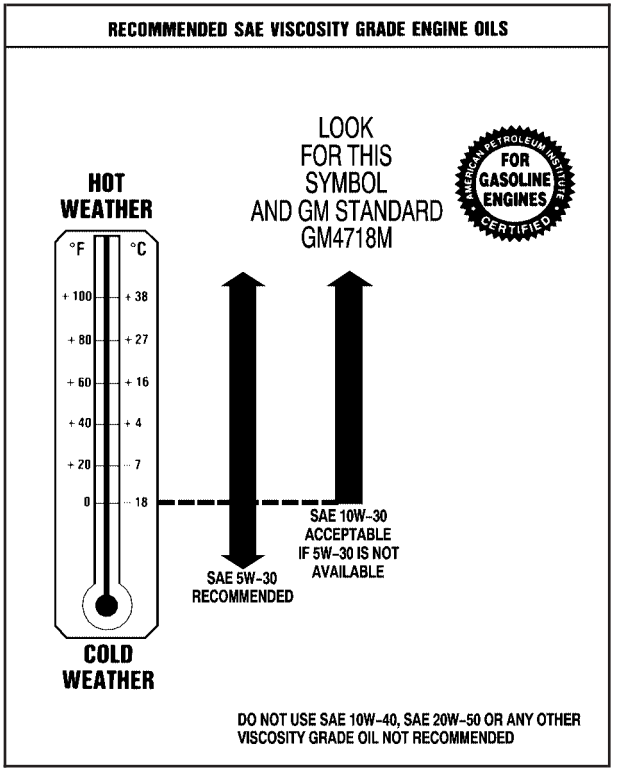

- SAE 5W-30

  As shown in the viscosity chart, SAE 5W-30 is best for your vehicle. However, you can use SAE 10W-30 if it is going to be 0°F (-18°C) or above.

  These numbers on an oil container show its viscosity, or thickness. Do not use other viscosity oils such as SAE 20W-50.




Oils meeting these requirements should also have the starburst symbol on the container. This symbol indicates that the oil has been certified by the American Petroleum Institute (API).

You should look for this on the oil container, and use *only* those oils that are identified as meeting GM Standard GM4718M and have the starburst symbol on the front of the oil container.

Your vehicle's engine is filled at the factory with a Mobil 1® synthetic oil, which meets all requirements for your vehicle.

**Substitute Engine Oil:** When adding oil to maintain engine oil level, oil meeting GM Standard GM4718M may not be available. You can add substitute oil designated SAE 5W-30 with the starburst symbol at all temperatures. If temperatures are above 0°F (-18°C), you may substitute SAE 10W-30 with the starburst symbol. Substitute oil not meeting GM Standard GM4718M should not be used for an oil change.

## Engine Oil Additives

Do not add anything to your oil. The recommended oils with the starburst symbol that meet GM Standard GM6094M are all you will need for good performance and engine protection.

## When to Change Engine Oil (GM Oil Life System)

Your vehicle has a computer system that lets you know when to change the engine oil and filter. This is based on engine revolutions and engine temperature, and not on mileage. Based on driving conditions, the mileage at which an oil change will be indicated can vary considerably. For the oil life system to work properly, you must reset the system every time the oil is changed.

When the system has calculated that oil life has been diminished, it will indicate that an oil change is necessary. A CHG OIL message will come on. See *Change Engine Oil Message on page 3-43* for more information on this message. Change your oil as soon as possible within the next two times you stop for fuel. It is possible that, if you are driving under the best conditions, the oil life system may not indicate that an oil change is necessary for over a year.

However, your engine oil and filter must be changed at least once a year and at this time the system must be reset. Your retailer has trained service people who will perform this work using genuine Saturn parts and reset the system. It is also important to check your oil regularly and keep it at the proper level.

If the system is ever reset accidentally, you must change your oil at 3,000 miles (5 000 km) since your last oil change. Remember to reset the oil life system whenever the oil is changed.

### How to Reset the Oil Life System

The GM Oil Life System calculates when to change your engine oil and filter based on vehicle use. Anytime your oil is changed, reset the system so it can calculate when the next oil change is required. If a situation occurs where you change your oil prior to the CHG OIL message being turned on, reset the system.

After changing the engine oil, reset the system by doing the following:

1. Press and release the trip/reset button until the OIL LIFE message is displayed.
2. Then press and hold the trip/reset button until a chime sounds five times, and RESET is displayed in the message center.

   When the system is reset, the odometer will again be displayed in the message center.
3. Turn the key to LOCK.

If the CHG OIL message comes back on when you start your vehicle, the engine oil life system has not reset. Repeat the procedure.

Your vehicle has a unique oil filter element. When installing the filler cap do not exceed 18 lb-ft (25 N•m ). Inspect the condition of the O-ring and replace if damaged. See your Saturn retailer for additional information.

## What to Do with Used Oil

Used engine oil contains certain elements that may be unhealthy for your skin and could even cause cancer. Do not let used oil stay on your skin for very long. Clean your skin and nails with soap and water, or a good hand cleaner. Wash or properly dispose of clothing or rags containing used engine oil. See the manufacturer's warnings about the use and disposal of oil products.

Used oil can be a threat to the environment. If you change your own oil, be sure to drain all the oil from the filter before disposal. Never dispose of oil by putting it in the trash, pouring it on the ground, into sewers, or into streams or bodies of water. Instead, recycle it by taking it to a place that collects used oil. If you have a problem properly disposing of your used oil, ask your retailer, a service station or a local recycling center for help.

## Engine Air Cleaner/Filter

### Engine Air Cleaner/Filter Replacement



**2.2L L4 Engine**

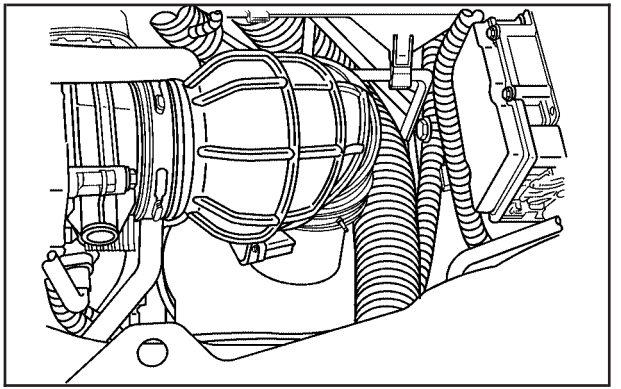

**2.0L Supercharged Engine**

### When to Inspect the Engine Air Cleaner/Filter

Inspect the air cleaner/filter at every oil change and replace at the first oil change after 25,000 miles (40,000 km).

## How to Inspect the Engine Air Cleaner/Filter

To inspect the air cleaner/filter remove the filter from the vehicle and lightly shake filter to release loose dust and dirt. If the filter remains “caked” with dirt, a new filter is required.

The engine air cleaner/filter is located in the engine compartment. See *Engine Compartment Overview on page 5-12* for more information on location.

See *Scheduled Maintenance on page 6-4* for information on when to replace the engine air cleaner/filter.

**⚠ CAUTION:**

**Operating the engine with the air cleaner/filter off can cause you or others to be burned. The air cleaner not only cleans the air, it helps to stop flame if the engine backfires.**

**CAUTION: (Continued)**

**CAUTION: (Continued)**

**If it is not there and the engine backfires, you could be burned. Do not drive with it off, and be careful working on the engine with the air cleaner/filter off.**

***Notice:*** **If the air cleaner/filter is off, a backfire can cause a damaging engine fire. And, dirt can easily get into your engine, which will damage it. Always have the air cleaner/filter in place when you are driving.**

To replace the engine air cleaner/filter, do the following:

1. Loosen the hose clamp that is on the inlet duct on the cover and pull off the hose.
2. For vehicles equipped with the 2.2L engine, release the two clips and turn the cover upward to unhook the hinges. For vehicles equipped with the 2.0L supercharged engine, remove the three screws on the cover.

3. Pull the air cleaner/filter box cover out and remove the air filter element from the air filter box. If the element is dirty, you should replace it. If the element is only dusty, it may be cleaned by blowing compressed air through it from the clean side. Make sure you are away from your engine compartment when cleaning the air filter with compressed air.
4. Wipe all dust from inside the housing and inspect the air cleaner and air inlet tube for cracks, cuts and deterioration. The air inlet tube must be replaced if it is damaged.
5. Install the air filter element, hose, hose clamp and cover.
6. For vehicles equipped with the 2.2L engine, latch the two clips. For vehicles equipped with the 2.0L supercharged engine, replace the three screws.

## Automatic Transaxle Fluid

It is not necessary to check the transaxle fluid level. A transaxle fluid leak is the only reason for fluid loss. If a leak occurs, take the vehicle to retailer's service department and have it repaired as soon as possible. You may also have your fluid level checked by your retailer or service center when you have your oil changed.

Change both the fluid and filter every 50,000 miles (83 000 km) if the vehicle is mainly driven under one or more of these conditions:

- In heavy city traffic where the outside temperature regularly reaches 90°F (32°C) or higher.
- In hilly or mountainous terrain.
- When doing frequent trailer towing.
- Uses such as found in taxi, police or delivery service.

If you do not use your vehicle under any of these conditions, the fluid and filter do not require changing.

***Notice:*** **For VTi variable transaxles, use only Saturn Variable Transaxle Fluid. Using any other fluid will result in transaxle damage. Damage cause by the use of fluid other than Saturn Variable Transaxle Fluid will not be covered by your warranty.**

***Notice:*** **For five-speed automatic transaxles, use only Saturn T-IV Transaxle Fluid. Using any other fluid will result in transaxle damage. Damage cause by the use of fluid other than Saturn T-IV Transaxle Fluid will not be covered by your warranty.**

## Manual Transaxle Fluid

It is not necessary to check the transaxle fluid level. A transaxle fluid leak is the only reason for fluid loss. If a leak occurs, take the vehicle to your retailer's service department and have it repaired as soon as possible. You may also have your fluid level checked by your retailer or service center when you have your oil changed. See *Recommended Fluids and Lubricants on page 6-14* for the proper fluid to use.

## Hydraulic Clutch

The hydraulic clutch linkage in your vehicle is self-adjusting. This system does not have its own reservoir. It receives fluid from the brake master cylinder reservoir.

See *Brakes on page 5-38* for more information.

## Engine Coolant

The cooling system in your vehicle is filled with DEX-COOL® engine coolant. This coolant is designed to remain in your vehicle for 5 years or 100,000 miles (166 000 km), whichever occurs first, if you add only DEX-COOL® extended life coolant.

The following explains your cooling system and how to add coolant when it is low. If you have a problem with engine overheating, see *Engine Overheating on page 5-29*.

A 50/50 mixture of clean, drinkable water and DEX-COOL® coolant will:

- Give freezing protection down to –34°F (–37°C).
- Give boiling protection up to 265°F (129°C).
- Protect against rust and corrosion.
- Help keep the proper engine temperature.
- Let the warning lights and gages work as they should.

***Notice:*** **Using coolant other than DEX-COOL® may cause premature engine, heater core or radiator corrosion. In addition, the engine coolant may require changing sooner, at 30,000 miles (50 000 km) or 24 months, whichever occurs first. Any repairs would not be covered by your warranty. Always use DEX-COOL® (silicate-free) coolant in your vehicle.**

### What to Use

Use a mixture of one-half *clean, drinkable water* and one-half DEX-COOL® coolant which won't damage aluminum parts. If you use this coolant mixture, you don't need to add anything else.

**⚠ CAUTION:**

**Adding only plain water to your cooling system can be dangerous. Plain water, or some other liquid such as alcohol, can boil before the proper coolant mixture will.**

**CAUTION: (Continued)**

**CAUTION: (Continued)**

**Your vehicle's coolant warning system is set for the proper coolant mixture. With plain water or the wrong mixture, your engine could get too hot but you would not get the overheat warning. Your engine could catch fire and you or others could be burned. Use a 50/50 mixture of clean, drinkable water and DEX-COOL® coolant.**

***Notice:*** **If you use an improper coolant mixture, your engine could overheat and be badly damaged. The repair cost would not be covered by your warranty. Too much water in the mixture can freeze and crack the engine, radiator, heater core and other parts.**

If you have to add coolant more than four times a year, have your retailer check your cooling system.

***Notice:*** **If you use the proper coolant, you do not have to add extra inhibitors or additives which claim to improve the system. These can be harmful.**

## Checking Coolant



The surge tank is located on the driver's side of the engine compartment. See *Engine Compartment Overview on page 5-12* for more information on location.

**⚠ CAUTION:**

**Turning the surge tank pressure cap when the engine and radiator are hot can allow steam and scalding liquids to blow out and burn you badly. Never turn the surge tank pressure cap — even a little — when the engine and radiator are hot.**

The vehicle must be on a level surface. When your engine is cold, the coolant level should be near the cold fill line. When your engine is warm, the level should be at the cold fill line or a little higher.

If the COOLANT warning message comes on and stays on, it means you're low on engine coolant. See *Low Coolant Level Warning Message on page 3-43*.

### Adding Coolant

If you need more coolant, add the proper DEX-COOL® coolant mixture *at the surge tank*, but only when the engine is cool. See *Cooling System on page 5-32* for instructions on how to add coolant to the coolant surge tank.

**⚠ CAUTION:**

**You can be burned if you spill coolant on hot engine parts. Coolant contains ethylene glycol, and it will burn if the engine parts are hot enough. Do not spill coolant on a hot engine.**

When replacing the pressure cap, make sure it is hand-tight.

## Coolant Surge Tank Pressure Cap

***Notice:*** **If the pressure cap is not tightly installed, coolant loss and possible engine damage may occur. Be sure the cap is properly and tightly secured.**

If you replace your coolant surge tank pressure cap, a Saturn cap is required.

## Engine Overheating

You will find a coolant temperature gage and a low coolant level warning message on your vehicle's instrument panel. See *Engine Coolant Temperature Gage on page 3-35* and *Low Coolant Level Warning Message on page 3-43*. You also have a check gage message and a transaxle fluid hot message. See *Check Gage Message on page 3-44* and *Transaxle Fluid Hot Message on page 3-42*.

***Notice:*** **Driving with either the CHK GAGE message or the COOLANT message displayed in the message center and the Engine Coolant Temperature Gage on your instrument panel in the red zone could cause your vehicle to overheat. See "Engine Overheating" under *Engine Coolant on page 5-26*. Your vehicle could be damaged and the damages might not be covered by your warranty.**

## If Steam Is Coming From Your Engine



**⚠ CAUTION:**

**Steam from an overheated engine can burn you badly, even if you just open the hood. Stay away from the engine if you see or hear steam coming from it. Just turn it off and get everyone away from the vehicle until it cools down. Wait until there is no sign of steam or coolant before you open the hood.**

**If you keep driving when your engine is overheated, the liquids in it can catch fire. You or others could be badly burned. Stop your engine if it overheats, and get out of the vehicle until the engine is cool.**

***Notice:*** **If your engine catches fire because you keep driving with no coolant, your vehicle can be badly damaged. The costly repairs would not be covered by your warranty.**

## If No Steam Is Coming From Your Engine

An overheat warning can indicate a serious problem. See *Low Coolant Level Warning Message on page 3-43*.

If you get an engine overheat warning with no warning messages, but see or hear no steam, the problem may not be too serious. Sometimes the engine can get a little too hot when you:

- Climb a long hill on a hot day.
- Stop after high-speed driving.
- Idle for long periods in traffic.
- Tow a trailer.

If you get the overheat warning with no sign of steam, try this for a minute or so:

1. If you have an air conditioner and it's on, turn it off.
2. Turn on your heater to full hot at the highest fan speed and open the window as necessary.
3. Try to minimize engine load. If you're in a traffic jam, shift to NEUTRAL (N); otherwise, shift to the highest gear while driving.

If you no longer have the overheat warning, you can drive. Just to be safe, drive slower for about 10 minutes. If the warning doesn't come back on, you can drive normally.

If the warning continues and you have not stopped, pull over, stop, and park your vehicle right away.

If there's still no sign of steam, you can idle the engine for three minutes while you're parked. If you still have the warning, *turn off the engine and get everyone out of the vehicle* until it cools down.

You may decide not to lift the hood but to get service help right away.

## Cooling System

When you decide it's safe to lift the hood, here's what you'll see:

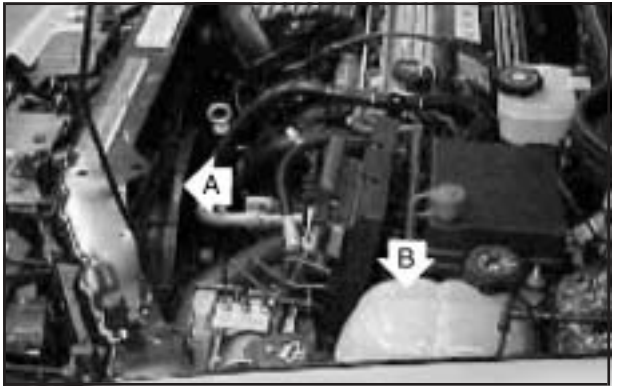


A. Electric Engine Fan
B. Coolant Surge Tank with Pressure Cap

**⚠ CAUTION:**

**An electric engine cooling fan under the hood can start up even when the engine is not running and can injure you. Keep hands, clothing and tools away from any underhood electric fan.**

If the coolant inside the coolant surge tank is boiling, don't do anything else until it cools down. The vehicle should be parked on a level surface.



The coolant level should be at the cold fill line. If it isn't, you may have a leak at the radiator hoses, heater hoses, radiator, water pump or somewhere else in the cooling system.

**⚠ CAUTION:**

**Heater and radiator hoses, and other engine parts, can be very hot. Do not touch them. If you do, you can be burned.**

**CAUTION: (Continued)**

**CAUTION: (Continued)**

**Do not run the engine if there is a leak. If you run the engine, it could lose all coolant. That could cause an engine fire, and you could be burned. Get any leak fixed before you drive the vehicle.**

If there seems to be no leak, with the engine on, check to see if the electric engine cooling fans are running. If the engine is overheating, both fan should be running. If it isn't, your vehicle needs service. Turn off the engine.

***Notice:*** **Engine damage from running your engine without coolant is not covered by your warranty.**

***Notice:*** **Using coolant other than DEX-COOL® may cause premature engine, heater core or radiator corrosion. In addition, the engine coolant may require changing sooner, at 30,000 miles (50 000 km) or 24 months, whichever occurs first. Any repairs would not be covered by your warranty. Always use DEX-COOL®(silicate-free) coolant in your vehicle.**

## How to Add Coolant to the Coolant Surge Tank

If you haven't found a problem yet, check to see if coolant is visible in the surge tank. If coolant is visible but the coolant level isn't at the cold fill line, add a 50/50 mixture of *clean, drinkable water* and DEX-COOL® coolant at the coolant surge tank, but be sure the cooling system, including the coolant surge tank pressure cap, is cool before you do it. See *Engine Coolant on page 5-26* for more information.

**⚠ CAUTION:**

**Steam and scalding liquids from a hot cooling system can blow out and burn you badly. They are under pressure, and if you turn the coolant surge tank pressure cap — even a little — they can come out at high speed. Never turn the cap when the cooling system, including the coolant surge tank pressure cap, is hot. Wait for the cooling system and coolant surge tank pressure cap to cool if you ever have to turn the pressure cap.**



**⚠ CAUTION:**

**Adding only plain water to your cooling system can be dangerous. Plain water, or some other liquid such as alcohol, can boil before the proper coolant mixture will.**

**CAUTION: (Continued)**

**CAUTION: (Continued)**

**Your vehicle's coolant warning system is set for the proper coolant mixture. With plain water or the wrong mixture, your engine could get too hot but you would not get the overheat warning. Your engine could catch fire and you or others could be burned. Use a 50/50 mixture of clean, drinkable water and DEX-COOL® coolant.**

***Notice:*** **In cold weather, water can freeze and crack the engine, radiator, heater core and other parts. Use the recommended coolant and the proper coolant mixture.**

**⚠ CAUTION:**

**You can be burned if you spill coolant on hot engine parts. Coolant contains ethylene glycol and it will burn if the engine parts are hot enough. Do not spill coolant on a hot engine.**



1. You can remove the coolant surge tank pressure cap when the cooling system, including the coolant surge tank pressure cap and upper radiator hose, is no longer hot. Turn the pressure cap slowly counterclockwise (left) about one-quarter of a turn. If you hear a hiss, wait for that to stop. This will allow any pressure still left to be vented out the discharge hose.
2. Then keep turning the pressure cap slowly, and remove it.




3. Fill the coolant surge tank with the proper DEX-COOL® coolant mixture, to the cold fill line.
4. With the coolant surge tank pressure cap off, start the engine and let it run until you can feel the upper radiator hose getting hot. Watch out for the engine cooling fan.

   By this time, the coolant level inside the coolant surge tank may be lower. If the level is lower, add more of the proper DEX-COOL® coolant mixture to the coolant surge tank until the level reaches the cold fill line.
5. Then replace the pressure cap. Be sure the pressure cap is hand-tight.

Check the level in the surge tank when the cooling system has cooled down. If the coolant isn't at the proper level, repeat Steps 1 through 3 and reinstall the pressure cap. If the coolant isn't at the proper level when the system cools down again, see your retailer.

# Windshield Washer Fluid

## What to Use

When you need windshield washer fluid, be sure to read the instructions before use. If you will be operating your vehicle in an area where the temperature may fall below freezing, use a fluid that has sufficient protection against freezing.

## Adding Windshield Washer Fluid

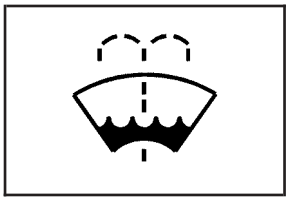

Open the cap with this symbol printed on it and add washer fluid until the tank is full.

***Notice:***

- **When using concentrated washer fluid, follow the manufacturer's instructions for adding water.**
- **Do not mix water with ready-to-use washer fluid. Water can cause the solution to freeze and damage your washer fluid tank and other parts of the washer system. Also, water does not clean as well as washer fluid.**
- **Fill your washer fluid tank only three-quarters full when it is very cold. This allows for expansion if freezing occurs, which could damage the tank if it is completely full.**
- **Do not use engine coolant (antifreeze) in your windshield washer. It can damage your washer system and paint.**

# Brakes

## Brake Fluid



Your brake master cylinder reservoir is filled with DOT-3 brake fluid. See *Engine Compartment Overview on page 5-12* for the location of the reservoir.

There are only two reasons why the brake fluid level in the reservoir might go down. The first is that the brake fluid goes down to an acceptable level during normal brake lining wear. When new linings are put in, the fluid level goes back up. The other reason is that fluid is leaking out of the brake system or hydraulic clutch system if you have a manual transaxle. If it is, you should have both systems checked and the necessary repairs made, since a leak means that sooner or later your brakes and/or clutch will not work well, or will not work at all.

So, it isn noa good idea to “top off” your brake fluid. Adding brake fluid will not correct a leak. If you add fluid when your linings are worn, then you will have too much fluid when you get new brake linings. You should add (or remove) brake fluid, as necessary, only when work is done on the brake and/or clutch hydraulic system.

**⚠ CAUTION:**

**If you have too much brake fluid, it can spill on the engine. The fluid will burn if the engine is hot enough. You or others could be burned, and your vehicle could be damaged. Add brake fluid only when work is done on the brake hydraulic system.**

When your brake fluid falls to a low level, your brake warning light will come on. See *Brake System Warning Light on page 3-32*.

## Checking Brake Fluid

You can check the brake fluid level without removing the reservoir cap by just looking at the brake fluid reservoir. The fluid level should be at or below the MAX fill mark. After work has been done on the brake hydraulic system, make sure the level does not exceed the MAX fill mark on the reservoir.

## What to Add

When you do need brake fluid, use only DOT-3 brake fluid. Use new brake fluid from a sealed container only. See *Recommended Fluids and Lubricants on page 6-14*. Be sure to clean the brake fluid reservoir cap and the area around the cap before removing it. This will help keep dirt from entering the reservoir.

**⚠ CAUTION:**

**With the wrong kind of fluid in your brake system, your brakes may not work well, or they may not even work at all. This could cause a crash. Always use the proper brake fluid.**

***Notice:***

- **Using the wrong fluid can badly damage brake system parts. For example, just a few drops of mineral-based oil, such as engine oil, in your brake system can damage brake system parts so badly that they will have to be replaced. Do not let someone put in the wrong kind of fluid.**
- **If you spill brake fluid on your vehicle's painted surfaces, the paint finish can be damaged. Be careful not to spill brake fluid on your vehicle. If you do, wash it off immediately. See *Appearance Care on page 5-87*.**

## Brake Wear

Your vehicle has front disc brakes and rear drum brakes.

Disc brake pads have built-in wear indicators that make a high-pitched warning sound when the brake pads are worn and new pads are needed. The sound may come and go or be heard all the time your vehicle is moving (except when you are pushing on the brake pedal firmly).

### ⚠ CAUTION:

**The brake wear warning sound means that soon your brakes will not work well. That could lead to an accident. When you hear the brake wear warning sound, have your vehicle serviced.**

***Notice:*** **Continuing to drive with worn-out brake pads could result in costly brake repair.**

Some driving conditions or climates may cause a brake squeal when the brakes are first applied or lightly applied. This does not mean something is wrong with your brakes.

Properly torqued wheel nuts are necessary to help prevent brake pulsation. When tires are rotated, inspect brake pads for wear and evenly tighten wheel nuts in the proper sequence to Saturn specifications.

The rear drum brakes do not have wear indicators, but if you ever hear a rear brake rubbing noise, have the rear brake linings inspected immediately. Also, the rear brake drums should be removed and inspected each time the tires are removed for rotation or changing. When you have the front brake pads replaced, have the rear brakes inspected, too.

Brake linings should always be replaced as complete axle sets.

## Brake Pedal Travel

See your retailer if the brake pedal does not return to normal height, or if there is a rapid increase in pedal travel. This could be a sign of brake trouble.

## Brake Adjustment

Every time you make a moderate brake stop, your brakes adjust for wear. If you rarely make a moderate or heavier stop, then your brakes might not adjust correctly. If you drive in that way, then — very carefully — make a few moderate brake stops about every 1,000 miles (1 600 km), so your brakes will adjust properly.

## Replacing Brake System Parts

The braking system on a vehicle is complex. Its many parts have to be of top quality and work well together if the vehicle is to have really good braking. Your vehicle was designed and tested with top-quality brake parts. When you replace parts of your braking system — for example, when your brake linings wear down and you need new ones put in — be sure you get new approved Saturn replacement parts. If you do not, your brakes may no longer work properly. For example, if someone puts in brake linings that are wrong for your vehicle, the balance between your front and rear brakes can change — for the worse. The braking performance you have come to expect can change in many other ways if someone puts in the wrong replacement brake parts.

## Battery

Your new vehicle comes with a maintenance free ACDelco® battery. When it is time for a new battery, get one that has the replacement number shown on the original battery's label. We recommend an ACDelco® battery.

Your vehicle's battery is located in the trunk next to the compact spare tire. To access the battery, use the trunk's floor carpet latch to lift the cover up.

***Warning:*** Battery posts, terminals and related accessories contain lead and lead compounds, chemicals known to the State of California to cause cancer and reproductive harm. Wash hands after handling.

## Vehicle Storage

If you are not going to drive your vehicle for 25 days or more, remove the black, negative (–) cable from the battery. This will help keep your battery from running down.

**⚠ CAUTION:**

**Batteries have acid that can burn you and gas that can explode. You can be badly hurt if you are not careful. See *Jump Starting on page 5-42* for tips on working around a battery without getting hurt.**

Contact your Saturn retailer to learn how to prepare your vehicle for longer storage periods.

## Jump Starting

If your battery has run down, you may want to use another vehicle and some jumper cables to start your vehicle. Be sure to follow the steps below to do it safely.

### ⚠ CAUTION:

**Batteries can hurt you. They can be dangerous because:**

- **They contain acid that can burn you.**
- **They contain gas that can explode or ignite.**
- **They contain enough electricity to burn you.**

**If you do not follow these steps exactly, some or all of these things can hurt you.**

***Notice:*** **Ignoring these steps could result in costly damage to your vehicle that would not be covered by your warranty.**

**Trying to start your vehicle by pushing or pulling it will not work, and it could damage your vehicle.**

1. Check the other vehicle. It must have a 12-volt battery with a negative ground system.

***Notice:*** **If the other vehicle's system is not a 12-volt system with a negative ground, both vehicles can be damaged. Only use vehicles with 12-volt systems with negative grounds to jump start your vehicle.**

2. Get the vehicles close enough so the jumper cables can reach, but be sure the vehicles aren't touching each other. If they are, it could cause a ground connection you don't want. You wouldn't be able to start your vehicle, and the bad grounding could damage the electrical systems.

   To avoid the possibility of the vehicles rolling, set the parking brake firmly on both vehicles involved in the jump start procedure. Put an automatic transaxle in PARK (P) or a manual transaxle in NEUTRAL before setting the parking brake.

***Notice:*** **If you leave your radio or other accessories on during the jump starting procedure, they could be damaged. The repairs would not be covered by your warranty. Always turn off your radio and other accessories when jump starting your vehicle.**

3. Turn off the ignition on both vehicles. Unplug unnecessary accessories plugged into the cigarette lighter or in the accessory power outlet. Turn off the radio and all lamps that aren't needed. This will avoid sparks and help save both batteries. And it could save your radio!

4. Open the hoods and locate the batteries. Find the positive (+) and negative (–) terminal locations on each vehicle.

   You will not need to access your battery for jump starting. Your vehicle has a remote positive (+) jump starting terminal for that purpose. The terminal is located on the engine compartment fuse block. See *Engine Compartment Overview on page 5-12* for more information on location.

**⚠ CAUTION:**

**An electric fan can start up even when the engine is not running and can injure you. Keep hands, clothing and tools away from any underhood electric fan.**

**⚠ CAUTION:**

**Using a match near a battery can cause battery gas to explode. People have been hurt doing this, and some have been blinded. Use a flashlight if you need more light.**

**Be sure the battery has enough water. You do not need to add water to the ACDelco® battery installed in your new vehicle. But if a battery has filler caps, be sure the right amount of fluid is there. If it is low, add water to take care of that first. If you do not, explosive gas could be present.**

**Battery fluid contains acid that can burn you. Do not get it on you. If you accidentally get it in your eyes or on your skin, flush the place with water and get medical help immediately.**

## ⚠ CAUTION:

**Fans or other moving engine parts can injure you badly. Keep your hands away from moving parts once the engine is running.**

5. Check that the jumper cables don't have loose or missing insulation. If they do, you could get a shock. The vehicles could be damaged, too.

   Before you connect the cables, here are some basic things you should know. Positive (+) will go to positive (+) or to a remote positive (+) terminal if the vehicle has one. Negative (–) will go to a heavy, unpainted metal engine part or to a remote negative (–) terminal if the vehicle has one.

   Don't connect positive (+) to negative (–) or you'll get a short that would damage the battery and maybe other parts, too. And don't connect the negative (–) cable to the negative (–) terminal on the dead battery because this can cause sparks.



6. Remove the terminal cover and connect the red positive (+) cable to the positive (+) terminal of the dead battery. Use a remote positive (+) terminal if the vehicle has one. The positive (+) terminal on your vehicle is covered by a red protector cap which must be removed before you connect the positive (+) jumper cable to the positive (+) terminal of the dead battery.



7. Don't let the other end touch metal. Connect it to the positive (+) terminal of the good battery. Use a remote positive (+) terminal if the vehicle has one.



8. Now connect the black negative (–) cable to the negative (–) terminal of the good battery. Use a remote negative (–) terminal if the vehicle has one.

   Don't let the other end touch anything until the next step. The other end of the negative (–) cable *doesn't* go to the dead battery. It goes to a heavy, unpainted metal part or to a remote negative (–) terminal on the vehicle with the dead battery.

9. Connect the other end of the negative (–) cable at least 18 inches (45 cm) away from the dead battery, but not near engine parts that move. The electrical connection is just as good there, and the chance of sparks getting back to the battery is much less.

10. Now start the vehicle with the good battery and run the engine for a while.
11. Press UNLOCK on the RKE transmitter to disarm your security system (if equipped).
12. Try to start the vehicle that had the dead battery. If it won't start after a few tries, it probably needs service.

***Notice:*** **If the jumper cables are removed in the wrong order, electrical shorting may occur and damage the vehicle. The repairs would not be covered by your warranty. Remove the jumper cables in the correct order, making sure that the cables do not touch each other or other metal.**

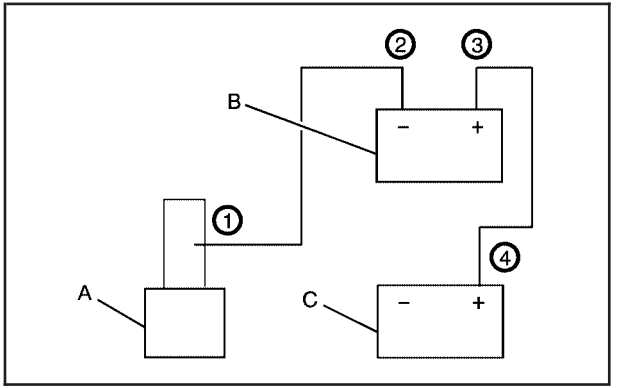


**Jumper Cable Removal**

A. Heavy, Unpainted Metal Engine Part
B. Good Battery
C. Dead Battery

To disconnect the jumper cables from both vehicles, do the following:

1. Disconnect the black negative (–) cable from the vehicle that had the dead battery.
2. Disconnect the black negative (–) cable from the vehicle with the good battery.
3. Disconnect the red positive (+) cable from the vehicle with the good battery.
4. Disconnect the red positive (+) cable from the other vehicle.
5. Return the terminal cover to its original position.

# Headlamp Aiming

Headlamp aim has been preset at the factory and should need no further adjustment.

If your vehicle is damaged in an accident, the headlamp aim may be affected. Aim adjustment to the low beam may be necessary if it is difficult to see lane markers (for horizontal aim), or if oncoming drivers flash their high beams at you (for vertical aim). If you believe your headlamps need to be re-aimed, we recommend that you take your vehicle to your retailer for service.

# Bulb Replacement

For the type of bulb to use, see *Replacement Bulbs on page 5-56*.

For any bulb changing procedure not listed in this section, contact your retailer.

## Halogen Bulbs

**⚠ CAUTION:**

**Halogen bulbs have pressurized gas inside and can burst if you drop or scratch the bulb. You or others could be injured. Be sure to read and follow the instructions on the bulb package.**

## Headlamps (Sedan)

1. Turn the ignition and headlamp switch off.
2. After allowing the bulb to cool, open the hood. See *Hood Release on page 5-10*.

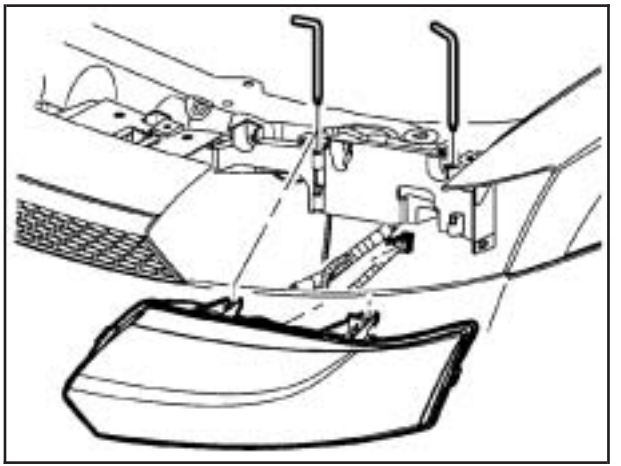

3. Pull up on the headlamp retaining pins to remove them, gently pull the headlamp assembly away from the vehicle and remove the electrical connector.

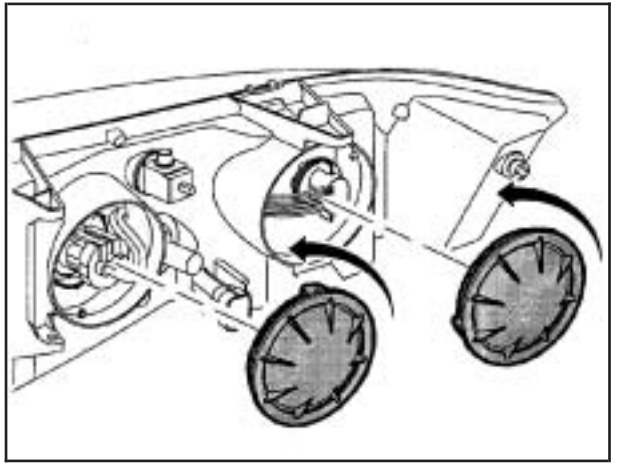

4. To access the headlamp bulb, turn the dust cap counter-clockwise to remove it.

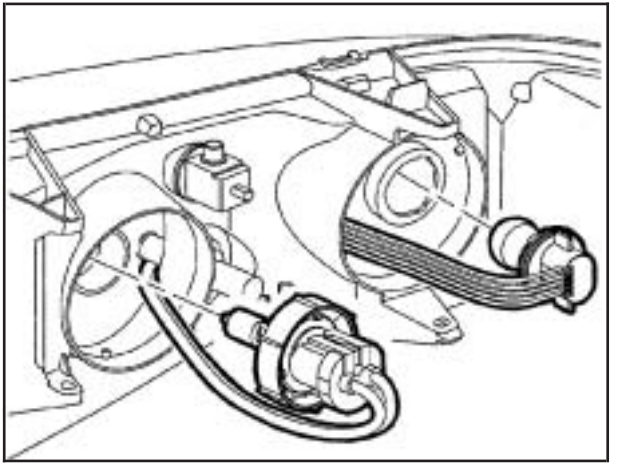

5. Raise the lock tab and pull the connector from the base of the bulb to remove the electrical connector from the headlamp bulb.

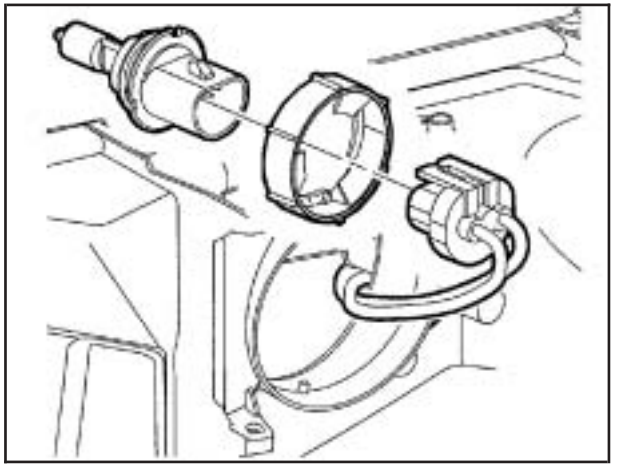

6. To remove the bulb retaining nut, turn it counter-clockwise.
7. Remove the bulb and replace it with the appropriate bulb.

## Headlamps (Coupe)

1. Turn the ignition and headlamp switch off.
2. After allowing the bulb to cool, open the hood. See *Hood Release on page 5-10*.

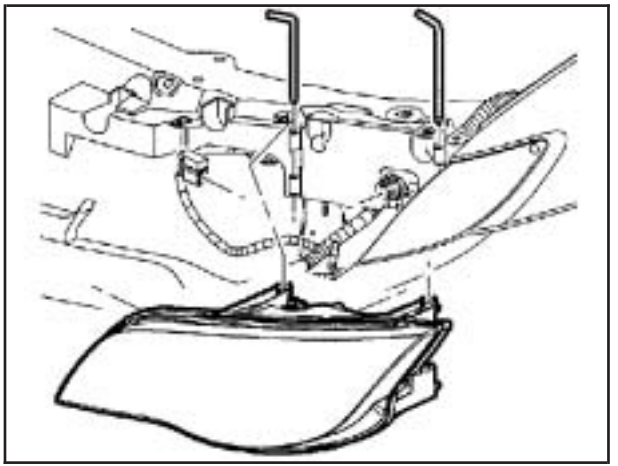

3. Pull up on the headlamp retaining pins to remove them, gently pull the headlamp assembly away from the vehicle and remove the electrical connector.

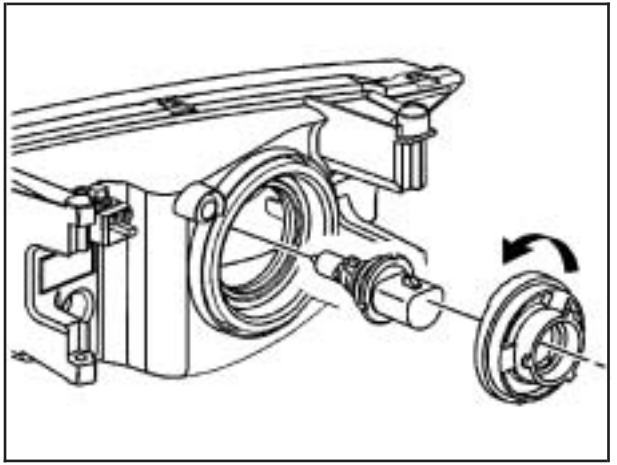

4. Remove the retaining nut.
5. Remove the bulb and replace it with the appropriate bulb.

## Front Turn Signal Lamps (Sedan)

1. Turn the ignition and headlamp switch off.
2. After allowing the bulb to cool, open the hood. See *Hood Release on page 5-10*.

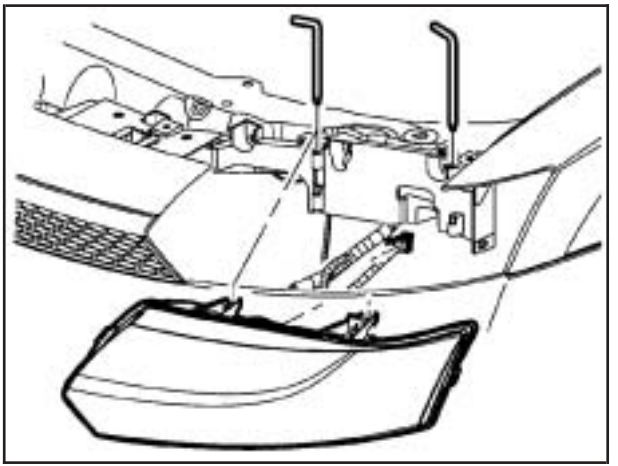

3. Pull up on the headlamp retaining pins to remove them, gently pull the headlamp assembly away from the vehicle and remove the electrical connector.

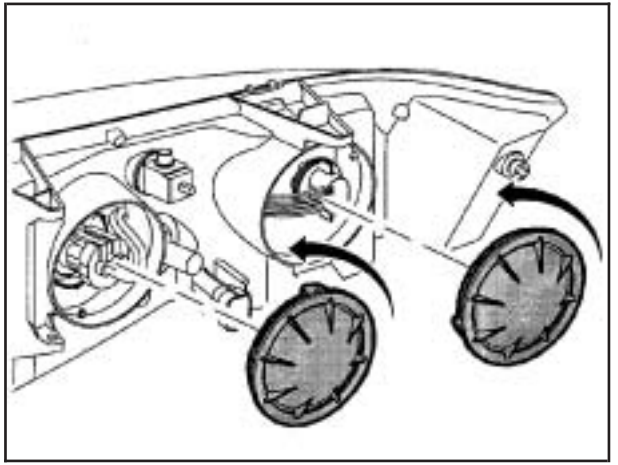

4. To access the park/turn bulb, turn the dust cap counter-clockwise to remove it.

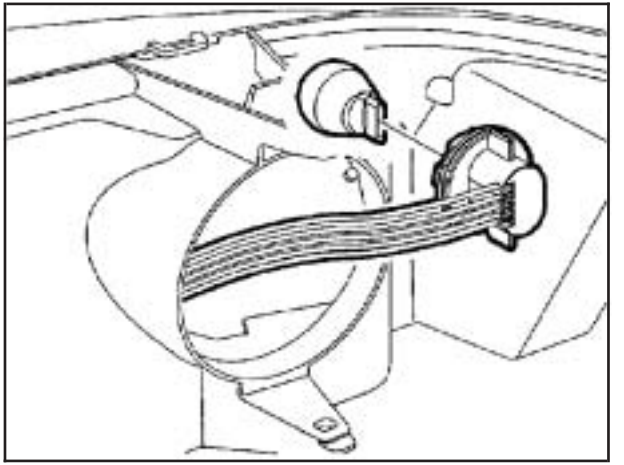

5. Remove the park/turn bulb socket and bulb by rotating it counter-clockwise.
6. Gently remove the bulb and replace it with the appropriate bulb.

## Front Turn Signal and Parking Lamps (Coupe)

1. Open the hood. See *Hood Release on page 5-10*.
2. Reach behind the headlamp from inside the hood.
3. Rotate the bulb socket counter-clockwise to remove it from the housing.

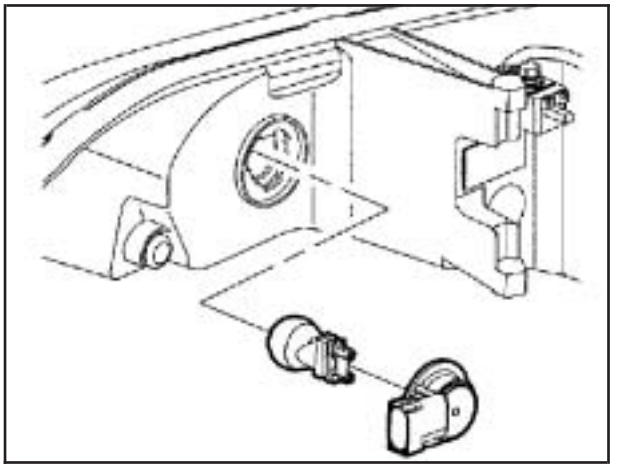

4. Gently pull the bulb from the socket and replace it with the appropriate bulb.

## Fog Lamps

1. Turn off the fog lamps and allow them to cool.
2. Reach under the front bumper to the rear of the fog lamp to locate the bulb socket.

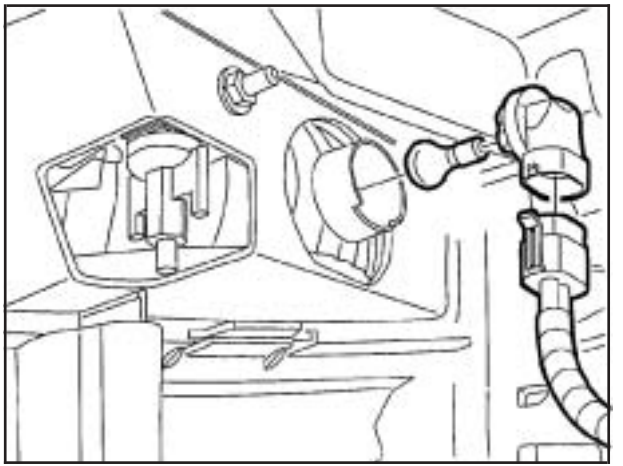

3. Then rotate the bulb socket counter-clockwise to remove it.
4. Remove the bulb and replace it with the appropriate bulb.

## Sidemarker Lamps (Coupe)

1. Turn the ignition and headlamp switch off.
2. Open the hood. See *Hood Release on page 5-10*.

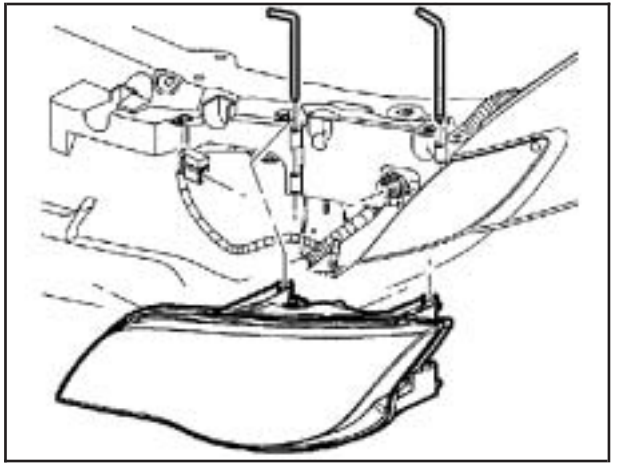

3. Pull up on the headlamp retaining pins to remove them, gently pull the headlamp assembly away from the vehicle and remove the electrical connector.

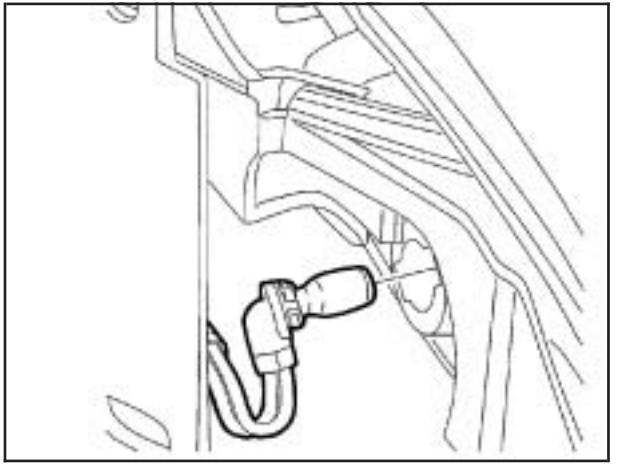

4. Rotate the side marker bulb counter-clockwise to disconnect it.
5. Gently remove the bulb and replace it with the appropriate bulb.

## Center High-Mounted Stoplamp (CHMSL)

1. Remove the CHMSL cover by pulling down on the cover edges.

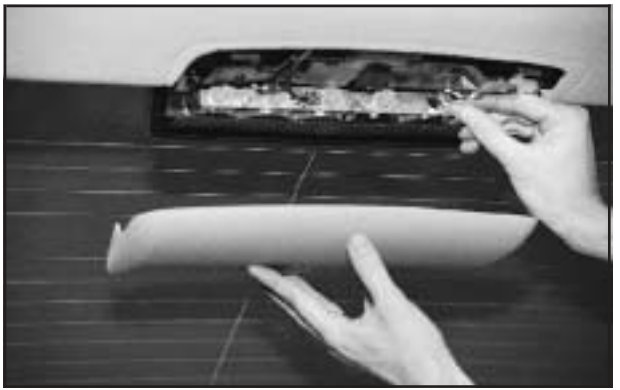

2. Twist the sockets out of the stop lamp and remove the bulbs.
3. Replace with the appropriate bulbs.

## Taillamps, Stoplamps and Back-up Lamps

1. Open the trunk.
2. Remove the retaining screws from the tail lamp.

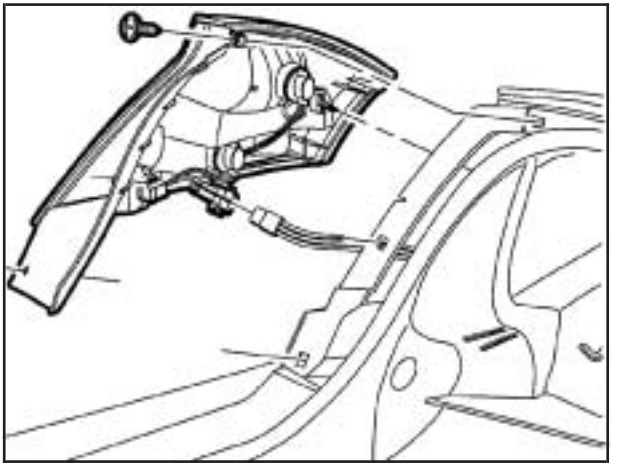

3. Slide the tail lamp back and remove it from the quarter panel.

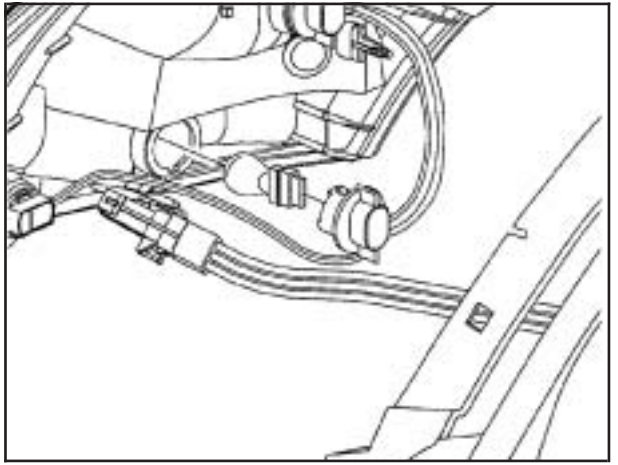

4. Remove the bulb socket by rotating 1/8 of a turn counter-clockwise.
5. Gently pull the bulb from the socket and replace it with the appropriate bulb.

## Replacement Bulbs

For any bulb not listed here contact your retailer.

| Lamp | Type | Saturn Part Number |
|---|---|---|
| Headlamps (All Models) | 9007 | 16524431 |
| Front Sidemarker Lamps (Coupe) | 168 | 9425542 |
| Front Turn Signal/Parking Lamps | 5702 | 10319394 |
| Stop/Taillamps (Top) | 3057 | 12450064 |
| Back-Up Lamps | 921L | 22692679 |
| CHMSL | PC-175 | 9442441 |
| Fog Lamps (All Models) | 881L | 12450176 |

# Windshield Wiper Blade Replacement

Windshield wiper blades should be inspected at least twice a year for wear or cracking. See “Windshield Wipers, Blade Check” under *Scheduled Maintenance on page 6-4* for more information.

Replacement blades come in different types and are removed in different ways. For proper type and length, see *Normal Maintenance Replacement Parts on page 6-16*. Here’s how to remove the wiper blades:

1. Turn on the wipers to the low wipe setting.
2. Turn off the ignition while the wipers are at the outer positions of the wiper pattern. The blades are more accessible for removal/replacement while in this position.
3. Pull the windshield wiper arm away from the windshield.



4. While holding the wiper arm away from the glass, push the release clip from under the blade connecting point and pull the old blade assembly down toward the glass to remove it from the wiper arm.
5. Push the new wiper blade securely on the wiper arm until you hear the release clip “click” into place.

# Tires

Your new vehicle comes with high-quality tires made by a leading tire manufacturer. If you ever have questions about your tire warranty and where to obtain service, see your GM Warranty booklet for details. For additional information refer to the tire manufacturer's booklet included with your vehicle's Owner's Manual.

**⚠ CAUTION:**

**Poorly maintained and improperly used tires are dangerous.**

- **Overloading your tires can cause overheating as a result of too much friction. You could have an air-out and a serious accident. See "Loading Your Vehicle" in the Index.**

**CAUTION: (Continued)**

**CAUTION: (Continued)**

- **Underinflated tires pose the same danger as overloaded tires. The resulting accident could cause serious injury. Check all tires frequently to maintain the recommended pressure. Tire pressure should be checked when your tires are cold.**
- **Overinflated tires are more likely to be cut, punctured or broken by a sudden impact — such as when you hit a pothole. Keep tires at the recommended pressure.**
- **Worn, old tires can cause accidents. If your tread is badly worn, or if your tires have been damaged, replace them.**

## Low-Profile Performance Tire (Red Line)

If your vehicle has 215/45ZR17 size tires, they are classified as “low-profile performance” tires. These tires are designed for very responsive driving on wet or dry pavement. You may also notice more road noise with low-profile performance tires and that they tend to wear faster.

***Notice:*** **If your vehicle has low-profile tires, they are more susceptible to damage from road hazards or curb impact than standard profile tires. Tire and or wheel assembly damage can occur when coming into contact with road hazards like, potholes or sharp edged objects or when sliding into a curb. Your GM warranty does not cover this type of damage. Keep tires set to the correct inflation pressure and, when possible avoid contact with curbs, potholes and other road hazards.**

For cold weather driving conditions, you may prefer to get tires designed for snow or ice. See your dealer for details regarding winter tire availability and proper tire selection. Also, see *Buying New Tires on page 5-70*.

If you choose to use winter tires:

- Use tires of the same brand and tread type on all four wheel positions.
- Use only radial ply tires of the same size, load range, and speed rating as your original equipment tires.

Winter tires with the same speed rating as your original equipment tires may not be available for H, V, W, and ZR speed rated tires. If you choose winter tires with a lower speed rating, never exceed the tire’s maximum speed capability.

## Tire Sidewall Labeling

Useful information about a tire is molded into its sidewall.

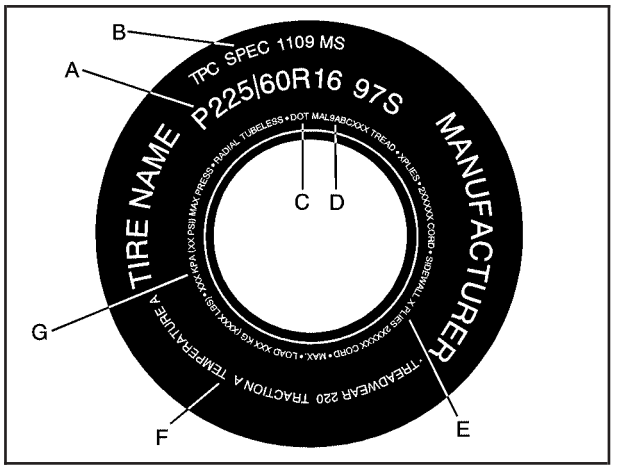


**Passenger Car Tire Example**

**(A) Tire Size:** The tire size code is a combination of letters and numbers used to define a particular tire's width, height, aspect ratio, construction type and service description. See the "Tire Size" illustration later in this section for more detail.

**(B) Tire Performance Criteria Specification (TPC Spec):** Original equipment tires designed to GM's specific tire performance criteria have a TPC specification code molded onto the sidewall. GM's TPC specifications meet or exceed all federal safety guidelines.

**(C) Department of Transportation (DOT):** The Department of Transportation (DOT) code indicates that the tire is in compliance with the U.S. Department of Transportation Motor Vehicle Safety Standards.

**(D) Tire Identification Number (TIN):** The letters and numbers following DOT code are the Tire Identification Number (TIN). The TIN shows the manufacturer and plant code, tire size, and date the tire was manufactured. The TIN is molded onto both sides of the tire, although only one side may have the date of manufacture.

**(E) Tire Ply Material:** The type of cord and number of plies in the sidewall and under the tread.

**(F) Uniform Tire Quality Grading (UTQG):** Tire manufacturers are required to grade tires based on three performance factors: treadwear, traction and temperature resistance. For more information see *Uniform Tire Quality Grading on page 5-71*.

**(G) Maximum Cold Inflation Load Limit:** Maximum load that can be carried and the maximum pressure needed to support that load. For more information on recommended tire pressure see *Inflation - Tire Pressure on page 5-66* and *Loading Your Vehicle on page 4-33*.

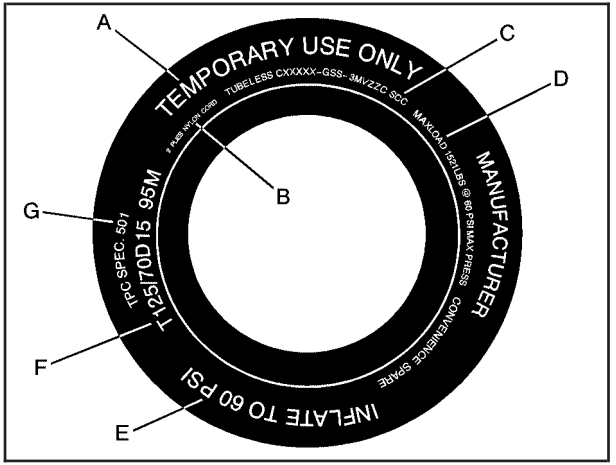


**Compact Spare Tire Example**

**(A) Temporary Use Only:** The compact spare tire or temporary use tire has a tread life of approximately 3,000 miles (5 000 km) and should not be driven at speeds over 65 mph (105 km/h). The compact spare tire is for emergency use when a regular road tire has lost air and gone flat. See *Compact Spare Tire on page 5-86* and *If a Tire Goes Flat on page 5-75*.

**(B) Tire Ply Material:** The type of cord and number of plies in the sidewall and under the tread.

**(C) Tire Identification Number (TIN):** The Tire Identification Number (TIN). The TIN shows the manufacturer and plant code, tire size, and date the tire was manufactured. The TIN is molded onto both sides of the tire, although only one side may have the date of manufacture.

**(D) Maximum Cold Inflation Load Limit:** Maximum load that can be carried and the maximum pressure needed to support that load. See *Compact Spare Tire on page 5-86* and *Loading Your Vehicle on page 4-33*.

**(E) Tire Inflation:** The temporary use tire or compact spare tire should be inflated to 60 psi (420 kPa). For more information on tire pressure and inflation see *Inflation - Tire Pressure on page 5-66*.

**(F) Tire Size:** A combination of letters and numbers define a tire's width, height, aspect ratio, construction type and service description. The letter "T" as the first character in the tire size means the tire is for temporary use only.

**(G) Tire Performance Criteria Specification (TPC Spec):** Original equipment tires designed to GM's specific tire performance criteria have a TPC specification code molded onto the sidewall. GM's TPC specifications meet or exceed all federal safety guidelines.

## Tire Size

The following illustration shows an example of a typical passenger car tire size.

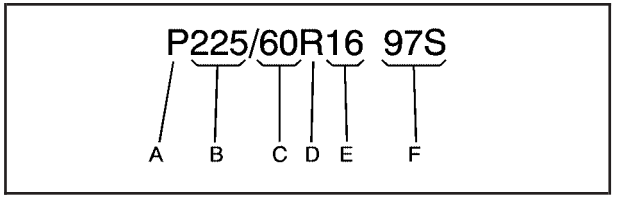


**(A) P-Metric Tire:** The United States version of a metric tire sizing system. The letter “P” as the first character in the tire size means a passenger vehicle tire engineered to standards set by the U. S. Tire and Rim Association.

**(B) Tire Width:** The three-digit number indicates the tire section width in millimeters from sidewall to sidewall.

**(C) Aspect Ratio:** A two-digit number that indicates the tire height-to-width measurements. For example, if the tire size aspect ratio is “70,” as shown in item “C” of the illustration, it would mean that the tire’s sidewall is 70% as high as it is wide.

**(D) Construction Code:** A letter code is used to indicate the type of ply construction in the tire. The letter “R” means radial ply construction; the letter “D” means diagonal or bias ply construction; and the letter “B” means belted-bias ply construction.

**(E) Rim Diameter:** Diameter of the wheel in inches.

**(F) Service Description:** These characters represent the load range and the speed rating of a tire. The load range represents the load carrying capacity a tire is certified to carry. The load index can range from 1 to 279. The speed rating is the maximum speed a tire is certified to carry a load. Speed ratings range from “A” to “Z”.

## Tire Terminology and Definitions

**Air Pressure:** The amount of air inside the tire pressing outward on each square inch of the tire. Air pressure is expressed in pounds per square inch (psi) or kilopascal (kPa).

**Accessory Weight:** This means the combined weight of optional accessories. Some examples of optional accessories are, automatic transmission, power steering, power brakes, power windows, power seats, and air conditioning.

**Aspect Ratio:** The relationship of a tire's height to its width.

**Belt:** A rubber coated layer of cords that is located between the plies and the tread. Cords may be made from steel or other reinforcing materials.

**Bead:** The tire bead contains steel wires wrapped by steel cords that hold the tire onto the rim.

**Bias Ply Tire:** A pneumatic tire in which the plies are laid at alternate angles less than 90 degrees to the centerline of the tread.

**Cold Inflation Pressure:** The amount of air pressure in a tire, measured in pounds per square inch (psi) before a tire has built up heat from driving. See *Inflation - Tire Pressure on page 5-66*.

**Curb Weight:** This means the weight of a motor vehicle with standard and optional equipment including the maximum capacity of fuel, oil and coolant, but without passengers and cargo.

**DOT Markings:** A code molded into the sidewall of a tire signifying that the tire is in compliance with the U.S. Department of Transportation motor vehicle safety standards. The DOT code includes the Tire Identification Number (TIN), an alphanumeric designator which can also identify the tire manufacturer, production plant, brand and date of production.

**GVWR:** Gross Vehicle Weight Rating, see *Loading Your Vehicle on page 4-33*.

**GAWR FRT:** Gross Axle Weight Rating for the front axle, see *Loading Your Vehicle on page 4-33*.

**GAWR RR:** Gross Axle Weight Rating for the rear axle, see *Loading Your Vehicle on page 4-33*.

**Intended Outboard Sidewall:** The side of an asymmetrical tire that must always face outward when mounted on a vehicle.

**Kilopascal (kPa):** The metric unit for air pressure. There are 6.9 kPa's to one psi.

**Light Truck (LT-Metric) Tire:** A tire used on light duty trucks and some multipurpose passenger vehicles.

**Load Index:** An assigned number ranging from 1 to 279 that corresponds to the load carrying capacity of a tire.

**Maximum Inflation Pressure:** The maximum air pressure to which a cold tire may be inflated. The maximum air pressure is molded onto the sidewall.

**Maximum Load Rating:** The load rating for a tire at the maximum permissible inflation pressure for that tire.

**Maximum Loaded Vehicle Weight:** The sum of curb weight; accessory weight; vehicle capacity weight; and production options weight.

**Normal Occupant Weight:** The number of occupants a vehicle is designed to seat multiplied by 150 pounds (68 kg). See *Loading Your Vehicle on page 4-33*.

**Occupant Distribution:** Designated seating positions.

**Outward Facing Sidewall:** The side of a asymmetrical tire that has a particular side that faces outward when mounted on a vehicle. The side of the tire that contains a whitewall, bears white lettering or bears manufacturer, brand and or model name molding that is higher or deeper than the same moldings on the other sidewall of the tire.

**Passenger (P-Metric) Tire:** A tire used on passenger cars and some light duty trucks and multipurpose vehicles.

**Recommended Inflation Pressure:** Vehicle manufacturer's recommended tire inflation pressure and shown on the tire placard. See *Inflation - Tire Pressure on page 5-66* and *Loading Your Vehicle on page 4-33*.

**Radial Ply tire:** A pneumatic tire in which the ply cords that extend to the beads are laid at 90 degrees to the centerline of the tread.

**Rim:** A metal support for a tire and upon which the tire beads are seated.

**Sidewall:** The portion of a tire between the tread and the bead.

**Speed Rating:** An alphanumeric code assigned to a tire indicating the maximum speed at which a tire can operate.

**Traction:** The friction between the tire and the road surface. The amount of grip provided.

**Tread:** The portion of a tire that comes into contact with the road.

**Treadwear Indicators:** Narrow bands, sometimes called “wear bars,” that show across the tread of a tire when only 2/32 inch of tread remains. See *When It Is Time for New Tires on page 5-69*.

**UTQGS:** Uniform Tire Quality Grading Standards, a tire information system that provides consumers with ratings for a tire’s traction, temperature and treadwear. Ratings are determined by tire manufacturers using government testing procedures. The ratings are molded into the sidewall of the tire. See *Uniform Tire Quality Grading on page 5-71*.

**Vehicle Capacity Weight:** The number of designated seating positions multiplied by 150 lbs. (68 kg) plus the rated cargo load. See *Loading Your Vehicle on page 4-33*.

**Vehicle Maximum Load on the Tire:** Load on an individual tire due to curb weight, accessory weight, occupant weight and cargo weight.

**Vehicle Placard:** A label permanently attached to a vehicle showing the original equipment tire size and recommended inflation pressure. See *Loading Your Vehicle on page 4-33*.

## Inflation - Tire Pressure

Tires need the correct amount of air pressure to operate effectively.

***Notice:*** **Do not let anyone tell you that under-inflation or over-inflation is all right. It is not. If your tires do not have enough air (under-inflation), you can get the following:**

- **Too much flexing**
- **Too much heat**
- **Tire overloading**
- **Premature or irregular wear**
- **Poor handling**
- **Reduced fuel economy**

**If your tires have too much air (over-inflation), you can get the following:**

- **Unusual wear**
- **Poor handling**
- **Rough ride**
- **Needless damage from road hazards**

A Tire and Loading Information label is attached to the vehicle's center pillar, below the driver's door latch or inside the glove box. This label lists your vehicle's original equipment tires and their recommended cold tire inflation pressures. The recommended cold tire inflation pressure, shown on the label, is the minimum amount of air pressure needed to support your vehicle's maximum load carrying capacity.

For additional information regarding how much weight your vehicle can carry, and an example of the tire and loading information label, see *Loading Your Vehicle on page 4-33*. How you load your vehicle affects vehicle handling and ride comfort, never load your vehicle with more weight than it was designed to carry.

### When to Check

Check your tires once a month or more. Do not forget to check the compact spare tire, it should be at 60 psi (420 kPa). For additional information regarding the compact spare tire, see *Compact Spare Tire on page 5-86*.

## How to Check

Use a good quality pocket-type gage to check tire pressure. You can't tell if your tires are properly inflated simply by looking at them. Radial tires may look properly inflated even when they're underinflated.
Check the tire's inflation pressure when the tires are cold. Cold means your vehicle has been sitting for at least three hours or driven no more than 1 mile (1.6 km).

Remove the valve cap from the tire valve stem. Press the tire gage firmly onto the valve to get a pressure measurement. If the cold tire inflation pressure matches the recommended pressure on the Tire and Loading Information label, no further adjustment is necessary. If the inflation pressure is low, add air until you reach the recommended amount.

If you overfill the tire, release air by pushing on the metal stem in the center of the tire valve. Recheck the tire pressure with the tire gage.

Be sure to put the valve caps back on the valve stems. They help prevent leaks by keeping out dirt and moisture.

## High Speed Operation (Red Line)

**⚠ CAUTION:**

**Driving at high speeds, 100 mph (160 km/h) or higher, puts an additional strain on tires. Sustained high-speed driving, causes excessive heat build up and can cause sudden tire failure. You could have a crash and you or others could be killed. Some high-speed rated tires require inflation pressure adjustment for high speed operation. When speed limits and road conditions are such, that a vehicle can be driven at high speeds, make sure the tires are rated for high speed operation, in excellent condition and set to the correct cold tire inflation pressure for the vehicle load.**

If your vehicle has 215/45ZR17 size tires, set the cold tire inflation pressure to 33 psi (227 kPa) for the front and rear tires, when operating your vehicle under high-speed conditions. When you end high-speed driving, return the tires to the cold inflation pressure shown on the tire and loading information label.

## Tire Inspection and Rotation

Tires should be rotated every 5,000 to 8,000 miles (8 000 to 13 000 km).

Any time you notice unusual wear, rotate your tires as soon as possible and check wheel alignment. Also check for damaged tires or wheels. See *When It Is Time for New Tires on page 5-69* and *Wheel Replacement on page 5-72* for more information.

The purpose of regular rotation is to achieve more uniform wear for all tires on the vehicle. The first rotation is the most important. See *Scheduled Maintenance on page 6-4*.

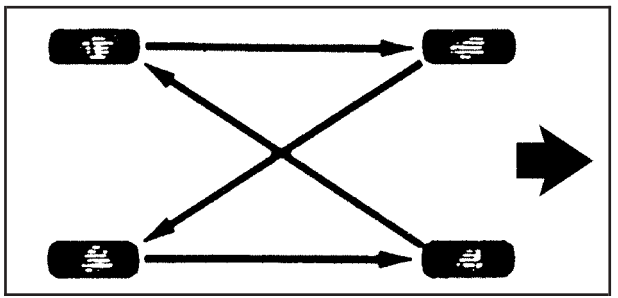

When rotating non-directional tires, always use the correct rotation pattern shown here.

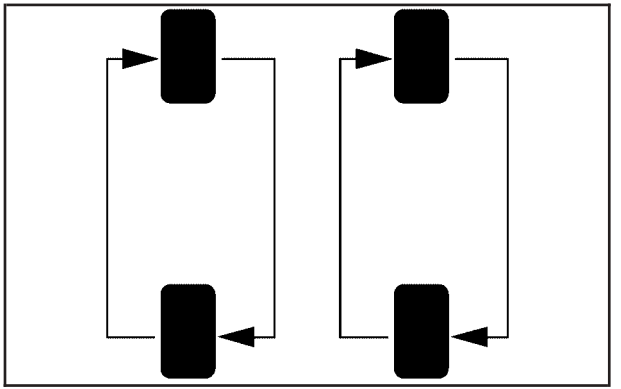

If your vehicle has 215/45ZR17 size tires, they are directional tires and must roll in a certain direction for the best overall performance. The direction is shown by an arrow on the tire sidewall. Because these tires are directional, they should be rotated as shown here. These tires should only be moved from front to rear and rear to front on the same side of the vehicle.

Don't include the compact spare tire in your tire rotation.

After the tires have been rotated, adjust the front and rear inflation pressures as shown on the Tire and Loading Information label. Make certain that all wheel nuts are properly tightened. See “Wheel Nut Torque” under *Capacities and Specifications on page 5-102*.

**⚠ CAUTION:**

**Rust or dirt on a wheel, or on the parts to which it is fastened, can make wheel nuts become loose after a time. The wheel could come off and cause an accident. When you change a wheel, remove any rust or dirt from places where the wheel attaches to the vehicle. In an emergency, you can use a cloth or a paper towel to do this; but be sure to use a scraper or wire brush later, if you need to, to get all the rust or dirt off. See “Changing a Flat Tire” in the Index.**

## When It Is Time for New Tires

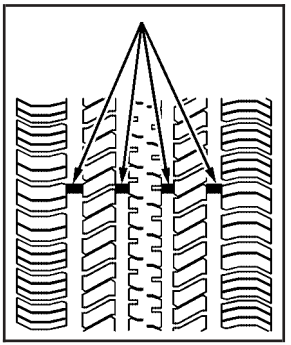

One way to tell when it’s time for new tires is to check the treadwear indicators, which will appear when your tires have only 1/16 inch (1.6 mm) or less of tread remaining.

You need a new tire if any of the following statements are true:

- You can see the indicators at three or more places around the tire.
- You can see cord or fabric showing through the tire’s rubber.
- The tread or sidewall is cracked, cut or snagged deep enough to show cord or fabric.
- The tire has a bump, bulge or split.
- The tire has a puncture, cut or other damage that can’t be repaired well because of the size or location of the damage.

## Buying New Tires

To find out what kind and size of tires your vehicle needs, look at the tire and loading information label. For more information about this label and its location on your vehicle, see *Loading Your Vehicle on page 4-33*.

The tires installed on your vehicle when it was new had a Tire Performance Criteria Specification (TPC Spec) number on each tire's sidewall. When you get new tires, GM recommends that you get tires with that same TPC Spec number. That way your vehicle will continue to have tires that are designed to give proper endurance, handling, speed rating, load range, traction, ride and other things during normal service on your vehicle. If your tires have an all-season tread design, the TPC number will be followed by an "MS" (for mud and snow).

If you ever replace your tires with those not having a TPC Spec number, make sure they are the same size, load range, speed rating and construction type (bias, bias-belted or radial) as your original tires.

**⚠ CAUTION:**

**Mixing tires could cause you to lose control while driving. If you mix tires of different sizes or types (radial and bias-belted tires), the vehicle may not handle properly, and you could have a crash. Using tires of different sizes may also cause damage to your vehicle. Be sure to use the same size and type tires on all wheels. It's all right to drive with your compact spare temporarily, it was developed for use on your vehicle. See *Compact Spare Tire on page 5-86*.**

**⚠ CAUTION:**

**If you use bias-ply tires on your vehicle, the wheel rim flanges could develop cracks after many miles of driving. A tire and/or wheel could fail suddenly, causing a crash. Use only radial-ply tires with the wheels on your vehicle.**

## Uniform Tire Quality Grading

Quality grades can be found where applicable on the tire sidewall between tread shoulder and maximum section width. For example:

### Treadwear 200 Traction AA Temperature A

The following information relates to the system developed by the United States National Highway Traffic Safety Administration, which grades tires by treadwear, traction and temperature performance. (This applies only to vehicles sold in the United States.) The grades are molded on the sidewalls of most passenger car tires. The Uniform Tire Quality Grading system does not apply to deep tread, winter-type snow tires, space-saver or temporary use spare tires, tires with nominal rim diameters of 10 to 12 inches (25 to 30 cm), or to some limited-production tires.

While the tires available on General Motors passenger cars and light trucks may vary with respect to these grades, they must also conform to federal safety requirements and additional General Motors Tire Performance Criteria (TPC) standards.

### Treadwear

The treadwear grade is a comparative rating based on the wear rate of the tire when tested under controlled conditions on a specified government test course. For example, a tire graded 150 would wear one and a half (1.5) times as well on the government course as a tire graded 100. The relative performance of tires depends upon the actual conditions of their use, however, and may depart significantly from the norm due to variations in driving habits, service practices and differences in road characteristics and climate.

### Traction – AA, A, B, C

The traction grades, from highest to lowest, are AA, A, B, and C. Those grades represent the tire's ability to stop on wet pavement as measured under controlled conditions on specified government test surfaces of asphalt and concrete. A tire marked C may have poor traction performance. Warning: The traction grade assigned to this tire is based on straight-ahead braking traction tests, and does not include acceleration, cornering, hydroplaning, or peak traction characteristics.

### Temperature – A, B, C

The temperature grades are A (the highest), B, and C, representing the tire's resistance to the generation of heat and its ability to dissipate heat when tested under controlled conditions on a specified indoor laboratory test wheel. Sustained high temperature can cause the material of the tire to degenerate and reduce tire life, and excessive temperature can lead to sudden tire failure. The grade C corresponds to a level of performance which all passenger car tires must meet under the Federal Motor Vehicle Safety Standard No. 109. Grades B and A represent higher levels of performance on the laboratory test wheel than the minimum required by law.

Warning: The temperature grade for this tire is established for a tire that is properly inflated and not overloaded. Excessive speed, underinflation, or excessive loading, either separately or in combination, can cause heat buildup and possible tire failure.

## Wheel Alignment and Tire Balance

The wheels on your vehicle were aligned and balanced carefully at the factory to give you the longest tire life and best overall performance.

Scheduled wheel alignment and wheel balancing are not needed. However, if you notice unusual tire wear or your vehicle pulling one way or the other, the alignment may need to be reset. If you notice your vehicle vibrating when driving on a smooth road, your wheels may need to be rebalanced.

## Wheel Replacement

Replace any wheel that is bent, cracked or badly rusted or corroded. If wheel nuts keep coming loose, the wheel, wheel bolts and wheel nuts should be replaced. If the wheel leaks air, replace it (except some aluminum wheels, which can sometimes be repaired). See your retailer if any of these conditions exist.

Your retailer will know the kind of wheel you need.

Each new wheel should have the same load-carrying capacity, diameter, width, offset and be mounted the same way as the one it replaces.

If you need to replace any of your wheels, wheel bolts or wheel nuts, replace them only with new Saturn original equipment parts. This way, you will be sure to have the right wheel, wheel bolts and wheel nuts for your vehicle.

**⚠ CAUTION:**

**Using the wrong replacement wheels, wheel bolts or wheel nuts on your vehicle can be dangerous. It could affect the braking and handling of your vehicle, make your tires lose air and make you lose control. You could have a collision in which you or others could be injured. Always use the correct wheel, wheel bolts and wheel nuts for replacement.**

***Notice:*** **The wrong wheel can also cause problems with bearing life, brake cooling, speedometer or odometer calibration, headlamp aim, bumper height, vehicle ground clearance and tire or tire chain clearance to the body and chassis.**

See *Changing a Flat Tire on page 5-76* for more information.

## Used Replacement Wheels

**⚠ CAUTION:**

**Putting a used wheel on your vehicle is dangerous. You can't know how it's been used or how far it's been driven. It could fail suddenly and cause a crash. If you have to replace a wheel, use a new Saturn original equipment wheel.**

## Tire Chains

### ⚠ CAUTION:

**If your vehicle has P195/60R15, P205/55R16 or 215/45ZR17 size tires, don't use tire chains, there's not enough clearance.**

**Tire chains used on a vehicle without the proper amount of clearance can cause damage to the brakes, suspension or other vehicle parts. The area damaged by the tire chains could cause you to lose control of your vehicle and you or others may be injured in a crash.**

**Use another type of traction device only if its manufacturer recommends it for use on your vehicle and tire size combination and road conditions. Follow that manufacturer's instructions. To help avoid damage to your**

**CAUTION: (Continued)**

### CAUTION: (Continued)

**vehicle, drive slowly, readjust or remove the device if it's contacting your vehicle, and don't spin your wheels.**

**If you do find traction devices that will fit, install them on the front tires.**

***Notice:*** **If your vehicle has a tire size other than P195/60R15, P205/55R16 or 215/45ZR17 size tires, use tire chains only where legal and only when you must. Use only SAE Class "S" type chains that are the proper size for your tires. Install them on the front tires and tighten them as tightly as possible with the ends securely fastened. Drive slowly and follow the chain manufacturer's instructions. If you can hear the chains contacting your vehicle, stop and retighten them. If the contact continues, slow down until it stops. Driving too fast or spinning the wheels with chains on will damage your vehicle.**

## If a Tire Goes Flat

It's unusual for a tire to "blowout" while you're driving, especially if you maintain your tires properly. If air goes out of a tire, it's much more likely to leak out slowly. But if you should ever have a "blowout," here are a few tips about what to expect and what to do:

If a front tire fails, the flat tire will create a drag that pulls the vehicle toward that side. Take your foot off the accelerator pedal and grip the steering wheel firmly. Steer to maintain lane position, and then gently brake to a stop well out of the traffic lane.

A rear blowout, particularly on a curve, acts much like a skid and may require the same correction you'd use in a skid. In any rear blowout, remove your foot from the accelerator pedal. Get the vehicle under control by steering the way you want the vehicle to go. It may be very bumpy and noisy, but you can still steer. Gently brake to a stop, well off the road if possible.

**⚠ CAUTION:**

**Lifting a vehicle and getting under it to do maintenance or repairs is dangerous without the appropriate safety equipment and training. The jack provided with your vehicle is designed only for changing a flat tire. If it is used for anything else, you or others could be badly injured or killed if the vehicle slips off the jack. Use the jack provided with your vehicle only for changing a flat tire.**

If a tire goes flat, the next part shows how to use your jacking equipment to change a flat tire safely.

## Changing a Flat Tire

If a tire goes flat, avoid further tire and wheel damage by driving slowly to a level place. Turn on your hazard warning flashers.

**⚠ CAUTION:**

**Changing a tire can be dangerous. The vehicle can slip off the jack and roll over or fall on you or other people. You and they could be badly injured or even killed. Find a level place to change your tire. To help prevent the vehicle from moving:**

1. **Set the parking brake firmly.**
2. **Put an automatic transaxle shift lever in PARK (P), or shift a manual transaxle to FIRST (1) or REVERSE (R).**
3. **Turn off the engine and do not restart while the vehicle is raised.**
4. **Do not allow passengers to remain in the vehicle.**

**To be even more certain the vehicle won't move, you should put blocks at the front and**

**CAUTION: (Continued)**

**CAUTION: (Continued)**

**rear of the tire farthest away from the one being changed. That would be the tire on the other side, at the opposite end of the vehicle.**

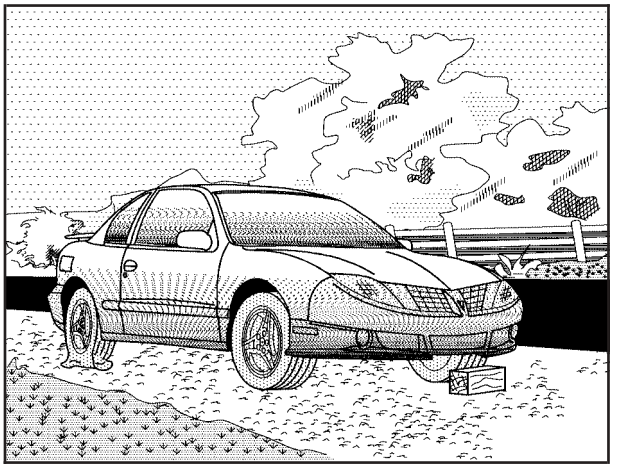

The following steps will tell you how to use the jack and change a tire.

## Removing the Spare Tire and Tools

The equipment you'll need is located in the trunk.

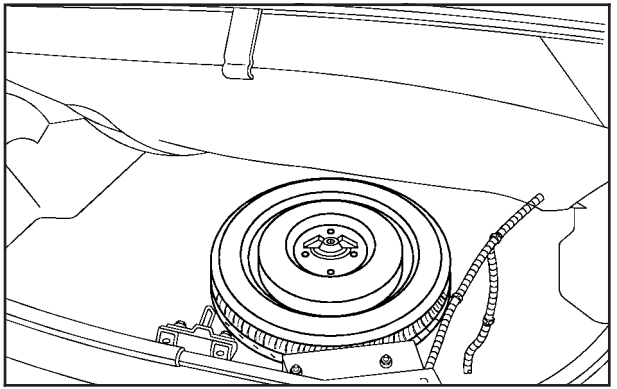

**2.2 L4 Engine**

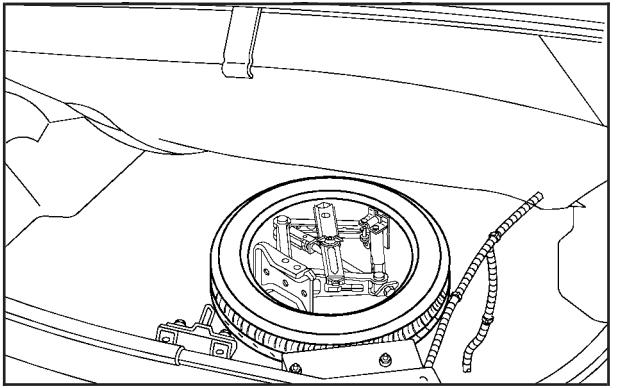

**2.0L Supercharged Engine**

1. Lift the trunk liner and place the plastic hook in the lip of the trunk lid.

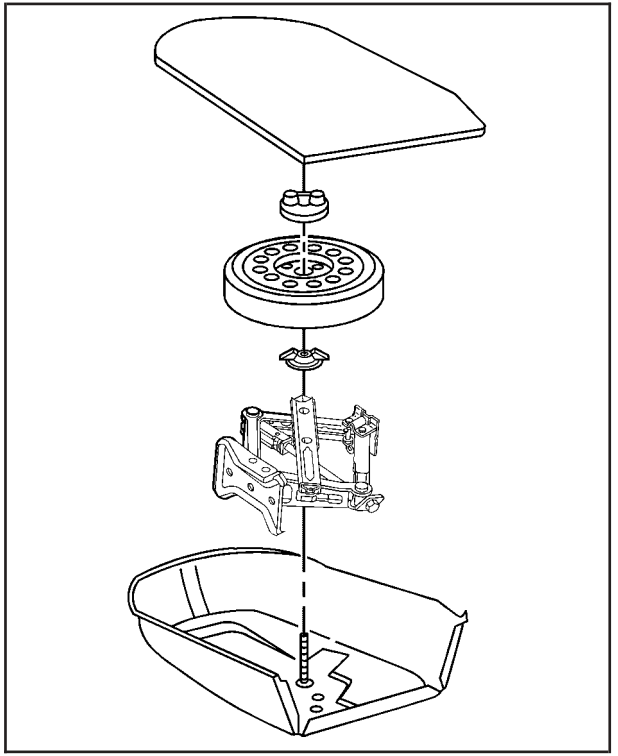

2.2 L4 Engine

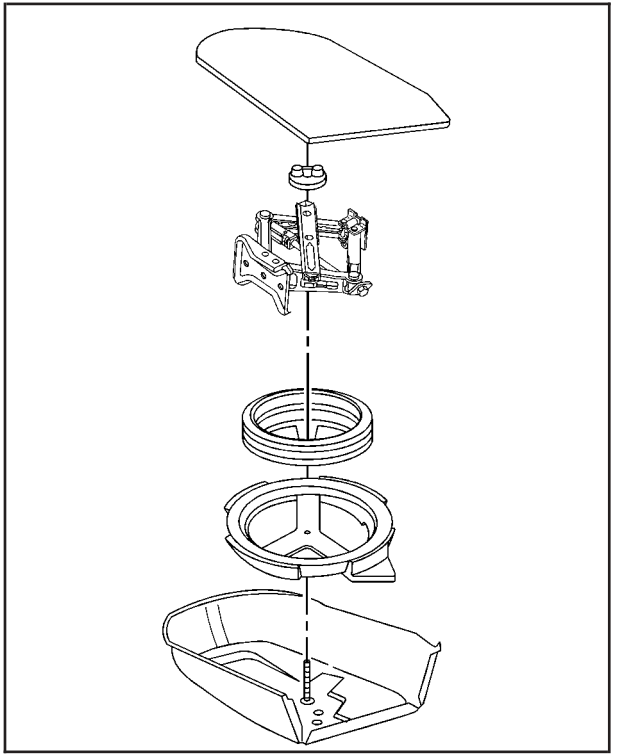

2.0L Supercharged Engine

2. Remove the nut that holds down the spare tire. See *Compact Spare Tire on page 5-86*
3. Remove the spare tire by placing your hands at the four and eight o'clock positions. Gently pull it up and out of the trunk. For vehicles equipped with the 2.0L supercharged engine, complete Step 4 first, then Step 3.
4. Remove the wing nut that holds the jack and remove the jack and wheel wrench.

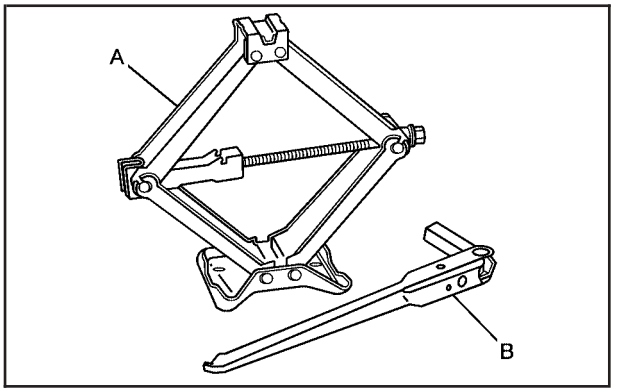


The tools you'll be using include the jack (A) and wheel wrench (B).



You will need to turn the plastic wheel nut counterclockwise to loosen the wheel wrench from the jack.



Press the button and then pull on the end of the wheel wrench to extend the handle.

## Removing the Flat Tire and Installing the Spare Tire

1. If your vehicle is equipped with plastic wheel covers, use the wheel wrench to loosening the plastic wheel nut caps. Once you have loosened the plastic wheel nut caps with the wheel wrench you can finish loosening them with your fingers. The plastic nut caps do not come off. Using the flat end of the wheel wrench, pry along the edge of the wheel cover until it comes off.

   If your vehicle has aluminum wheels, first remove the center cap with your finger or the wheel wrench.
2. Then use the wheel wrench to loosen all the wheel nuts. Don't remove them yet.

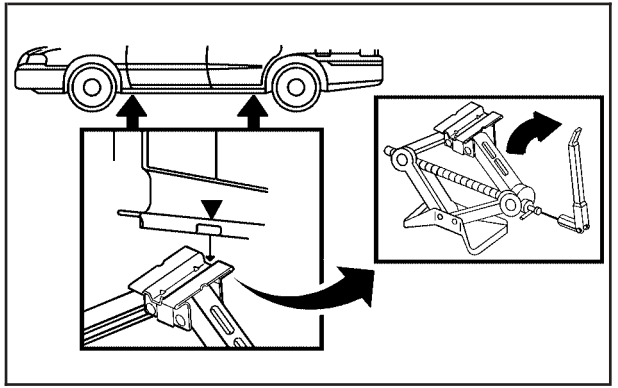

3. Position the jack lift head at the jack location nearest the flat tire. The front location is about 7 inches (17.8 cm) rearward from the front wheel opening. The rear location is about 2 inches (5.1 cm) forward of the rear wheel opening.

   Make sure the jack head is touching the metal jacking flange under the body. Do not place the jack under the plastic body panel.

***Notice:*** **Make sure that the jack lift head is in the correct position or you may damage your vehicle. The repairs would not be covered by your warranty.**

**⚠ CAUTION:**

**Getting under a vehicle when it is jacked up is dangerous. If the vehicle slips off the jack you could be badly injured or killed. Never get under a vehicle when it is supported only by a jack.**

**⚠ CAUTION:**

**Raising your vehicle with the jack improperly positioned can damage the vehicle and even make the vehicle fall. To help avoid personal injury and vehicle damage, be sure to fit the jack lift head into the proper location before raising the vehicle.**

4. Put the compact spare tire near you.
5. Raise the vehicle by turning the jack handle clockwise. Raise the vehicle far enough off the ground so there is enough room for the compact spare tire to fit under the vehicle.

6. Remove all of the wheel nuts.

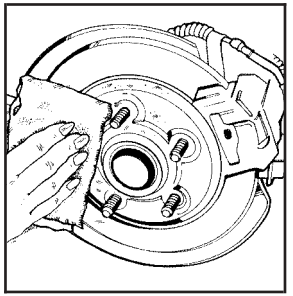

7. Remove any rust or dirt from the wheel bolts, mounting surfaces and spare wheel.

**⚠ CAUTION:**

**Rust or dirt on the wheel, or on the parts to which it is fastened, can make the wheel nuts become loose after a time. The wheel could come off and cause an accident. When you change a wheel, remove any rust or dirt from the places where the wheel attaches to the vehicle. In an emergency, you can use a cloth or a paper towel to do this; but be sure to use a scraper or wire brush later, if you need to, to get all the rust or dirt off.**

**⚠ CAUTION:**

**Never use oil or grease on studs or nuts. If you do, the nuts might come loose. Your wheel could fall off, causing a serious accident.**

8. Place the compact spare tire on the wheel-mounting surface.
9. Reinstall the wheel nuts with the rounded end of the nuts toward the wheel. Tighten each nut by hand until the wheel is held against the hub.
10. Lower the vehicle by turning the jack handle counterclockwise. Lower the jack completely.

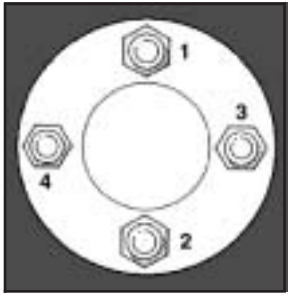


11. Tighten the wheel nuts firmly in a crisscross sequence, as shown.

**⚠ CAUTION:**

**Incorrect wheel nuts or improperly tightened wheel nuts can cause the wheel to come loose and even come off. This could lead to an accident. Be sure to use the correct wheel nuts. If you have to replace them, be sure to get new GM original equipment wheel nuts.**

**CAUTION: (Continued)**

**CAUTION: (Continued)**

**Stop somewhere as soon as you can and have the nuts tightened with a torque wrench to the proper torque specification. See "Capacities and Specifications" in the Index for wheel nut torque specification.**

***Notice:*** **Improperly tightened wheel nuts can lead to brake pulsation and rotor damage. To avoid expensive brake repairs, evenly tighten the wheel nuts in the proper sequence and to the proper torque specification. See "Capacities and Specifications" in the index for the wheel nut torque specification.**

Don't try to put a wheel cover on your compact spare tire. It won't fit. Store the wheel cover in the trunk until you have the flat tire repaired or replaced.

***Notice:*** **Wheel covers will not fit on your compact spare. If you try to put a wheel cover on the compact spare, you could damage the cover or the spare.**

## Storing the Flat or Spare Tire and Tools

**⚠ CAUTION:**

**Storing a jack, a tire, or other equipment in the passenger compartment of the vehicle could cause injury. In a sudden stop or collision, loose equipment could strike someone. Store all these in the proper place.**

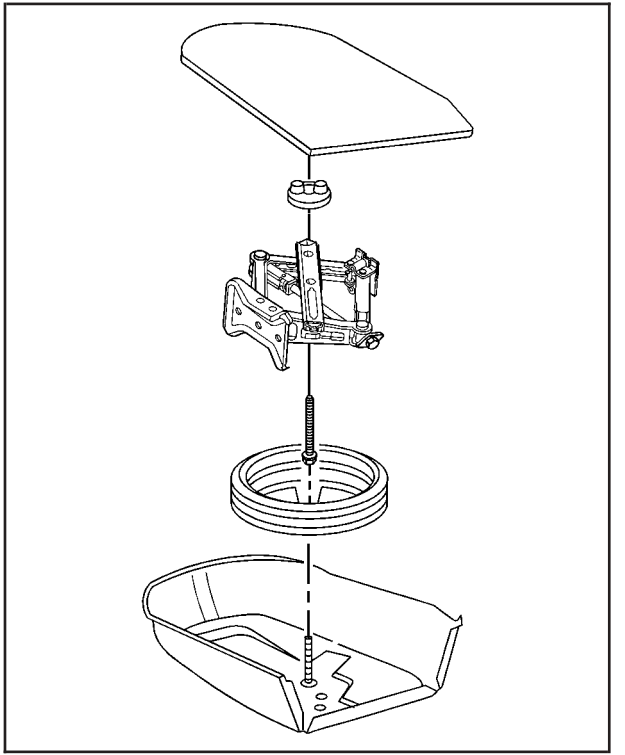

**2.2 L4 Engine**

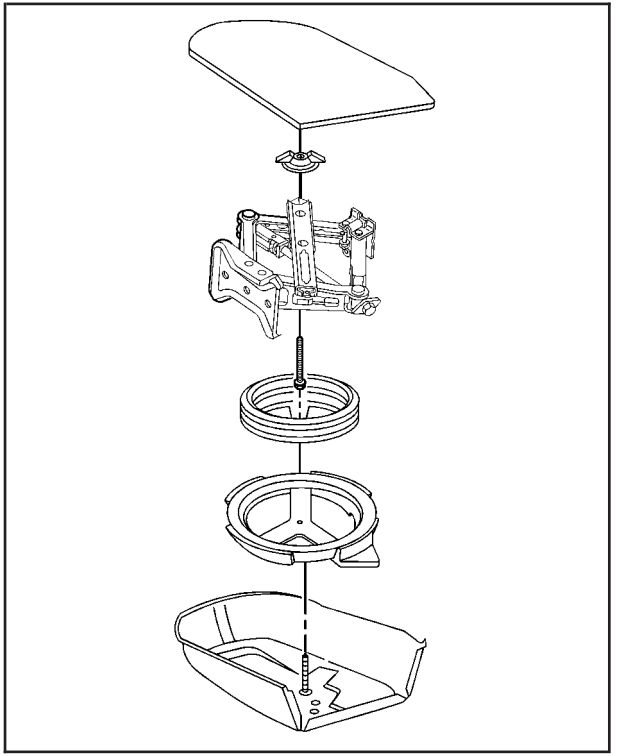

**2.0L Supercharged Engine**

1. Remove the stow bolt extension rod and sleeve from the jack.
2. Reattach the wheel wrench to the jack.
3. Screw the stow bolt extension rod and the sleeve into the existing spare tire hold-down bolt.
4. Place the flat tire face down into the spare tire hub. Avoid scraping the aluminum wheel on the hold-down bolt.
5. Place the jack into the center of the flat tire, being careful not to scratch the inside of the wheel.
6. Place the smaller jack hold-down nut in a safe place for use when you put the compact spare tire back into the trunk.
7. Remove the plastic sleeve from the stow bolt extension rod. Secure the jack and road wheel using the larger plastic retainer.

The compact spare tire is for temporary use only. Replace the compact spare with a full-size tire as soon as possible.

## Compact Spare Tire

Although the compact spare tire was fully inflated when your vehicle was new, it can lose air after a time. Check the inflation pressure regularly. It should be 60 psi (420 kPa).

After installing the compact spare tire on your vehicle, you should stop as soon as possible and make sure your compact spare tire is correctly inflated. The compact spare tire is made to perform well at speeds up to 65 mph (105 km/h) for distances up to 3,000 miles (5 000 km), so you can finish your trip and have your full-size tire repaired or replaced where you want. Of course, it's best to replace your spare with a full-size tire as soon as you can. Your spare will last longer and be in good shape in case you need it again.

***Notice:*** **When the compact spare is installed, don't take your vehicle through an automatic car wash with guide rails. The compact spare can get caught on the rails. That can damage the tire and wheel, and maybe other parts of your vehicle.**

Don't use your compact spare tire on other vehicles.

And don't mix your compact spare tire or wheel with other wheels or tires. They won't fit. Keep your compact spare tire and its wheel together.

***Notice:*** **Tire chains won't fit your compact spare. Using them can damage your vehicle and can damage the chains too. Don't use tire chains on your compact spare.**

# Appearance Care

Remember, cleaning products can be hazardous. Some are toxic. Others can burst into flames if you strike a match or get them on a hot part of the vehicle. Some are dangerous if you breathe their fumes in a closed space. When you use anything from a container to clean your vehicle, be sure to follow the manufacturer's warnings and instructions. And always open your doors or windows when you are cleaning the inside.

Never use these to clean your vehicle:

- Gasoline
- Benzene
- Naphtha
- Carbon Tetrachloride
- Acetone
- Paint Thinner
- Turpentine
- Lacquer Thinner
- Nail Polish Remover

They can all be hazardous — some more than others — and they can all damage your vehicle, too.

Do not use any of these unless this manual says you can. In many uses, these will damage your vehicle:

- Alcohol
- Laundry Soap
- Bleach
- Reducing Agents

## Cleaning the Inside of Your Vehicle

Use a vacuum cleaner often to get rid of dust and loose dirt. Wipe vinyl, leather, plastic and painted surfaces with a clean, damp cloth.

### Cleaning Fabric/Carpet

Your dealer has cleaners for the cleaning of fabric and carpet. They will clean normal spots and stains very well.

You can get GM-approved cleaning products from your dealer. See *Vehicle Care/Appearance Materials on page 5-93.*

Here are some cleaning tips:

- Always read the instructions on the cleaner label.
- Clean up stains as soon as you can — before they set.
- Carefully scrape off any excess stain.
- Use a clean cloth or sponge, and change to a clean area often. A soft brush may be used if stains are stubborn.
- If a ring forms on fabric after spot cleaning, clean the entire area immediately or it will set.

## Using Cleaner on Fabric

1. Vacuum and brush the area to remove any loose dirt.
2. Always clean a whole trim panel or section. Mask surrounding trim along stitch or welt lines.
3. Follow the directions on the container label.
4. Apply cleaner with a clean sponge. Do not saturate the material and do not rub it roughly.
5. As soon as you have cleaned the section, use a sponge to remove any excess cleaner.
6. Wipe cleaned area with a clean, water-dampened towel or cloth.
7. Wipe with a clean cloth and let dry.

## Special Fabric Cleaning Problems

Stains caused by such things as catsup, coffee (black), egg, fruit, fruit juice, milk, soft drinks, vomit, urine and blood can be removed as follows:

1. Carefully scrape off excess stain, then sponge the soiled area with cool water.
2. If a stain remains, follow the cleaner instructions described earlier.
3. If an odor lingers after cleaning vomit or urine, treat the area with a water/baking soda solution: 1 teaspoon (5 ml) of baking soda to 1 cup (250 ml) of lukewarm water.
4. Let dry.

Stains caused by candy, ice cream, mayonnaise, chili sauce and unknown stains can be removed as follows:

1. Carefully scrape off excess stain.
2. First, clean with cool water and allow to dry completely.
3. If a stain remains, follow the cleaner instructions described earlier.

## Cleaning Vinyl

Use warm water and a clean cloth.

- Rub with a clean, damp cloth to remove dirt. You may have to do this more than once.
- Things like tar, asphalt and shoe polish will stain if you do not get them off quickly. Use a clean cloth and vinyl cleaner. See your dealer for this product.

## Cleaning the Top of the Instrument Panel

Use only mild soap and water to clean the top surfaces of the instrument panel. Sprays containing silicones or waxes may cause annoying reflections in the windshield and even make it difficult to see through the windshield under certain conditions.

## Cleaning Interior Plastic Components

Use only a mild soap and water solution on a soft cloth or sponge. Commercial cleaners may affect the surface finish.

## Cleaning Glass Surfaces

Glass should be cleaned often. GM Glass Cleaner or a liquid household glass cleaner will remove normal tobacco smoke and dust films on interior glass.
See *Vehicle Care/Appearance Materials on page 5-93*.

***Notice:*** **If you use abrasive cleaners when cleaning glass surfaces on your vehicle, you could scratch the glass and/or cause damage to the rear window defogger and the integrated radio antenna. When cleaning the glass on your vehicle, use only a soft cloth and glass cleaner.**

## Care of Safety Belts

Keep belts clean and dry.

**⚠ CAUTION:**

**Do not bleach or dye safety belts. If you do, it may severely weaken them. In a crash, they might not be able to provide adequate protection. Clean safety belts only with mild soap and lukewarm water.**

## Weatherstrips

Silicone grease on weatherstrips will make them last longer, seal better, and not stick or squeak. Apply silicone grease with a clean cloth. During very cold, damp weather frequent applications may be required. See *Recommended Fluids and Lubricants on page 6-14*.

# Cleaning the Outside of Your Vehicle

The paint finish on your vehicle provides beauty, depth of color, gloss retention and durability.

## Washing Your Vehicle

The best way to preserve your vehicle's finish is to keep it clean by washing it often with lukewarm or cold water.

Do not wash your vehicle in the direct rays of the sun. Use a car washing soap. Do not use strong soaps or chemical detergents. Be sure to rinse the vehicle well, removing all soap residue completely. You can get GM-approved cleaning products from your dealer. See *Vehicle Care/Appearance Materials on page 5-93*. Do not use cleaning agents that are petroleum based, or that contain acid or abrasives. All cleaning agents should be flushed promptly and not allowed to dry on the surface, or they could stain. Dry the finish with a soft, clean chamois or an all-cotton towel to avoid surface scratches and water spotting.

High pressure car washes may cause water to enter your vehicle.

## Cleaning Exterior Lamps/Lenses

Use only lukewarm or cold water, a soft cloth and a car washing soap to clean exterior lamps and lenses. Follow instructions under "Washing Your Vehicle."

## Finish Care

Occasional waxing or mild polishing of your vehicle by hand may be necessary to remove residue from the paint finish. You can get GM-approved cleaning products from your dealer. See *Vehicle Care/Appearance Materials on page 5-93*.

Your vehicle has a "basecoat/clearcoat" paint finish. The clearcoat gives more depth and gloss to the colored basecoat. Always use waxes and polishes that are non-abrasive and made for a basecoat/clearcoat paint finish.

***Notice:*** **Machine compounding or aggressive polishing on a basecoat/clearcoat paint finish may damage it. Use only non-abrasive waxes and polishes that are made for a basecoat/clearcoat paint finish on your vehicle.**

Foreign materials such as calcium chloride and other salts, ice melting agents, road oil and tar, tree sap, bird droppings, chemicals from industrial chimneys, etc., can damage your vehicle's finish if they remain on painted surfaces. Wash the vehicle as soon as possible. If necessary, use non-abrasive cleaners that are marked safe for painted surfaces to remove foreign matter.

Exterior painted surfaces are subject to aging, weather and chemical fallout that can take their toll over a period of years. You can help to keep the paint finish looking new by keeping your vehicle garaged or covered whenever possible.

## Cleaning Windshield and Wiper Blades

If the windshield is not clear after using the windshield washer, or if the wiper blade chatters when running, wax, sap or other material may be on the blade or windshield.

Clean the outside of the windshield with a full-strength glass cleaning liquid. The windshield is clean if beads do not form when you rinse it with water.

Grime from the windshield will stick to the wiper blades and affect their performance. Clean the blade by wiping vigorously with a cloth soaked in full-strength windshield washer solvent. Then rinse the blade with water.

Check the wiper blades and clean them as necessary; replace blades that look worn.

## Cleaning Aluminum Wheels

Keep your wheels clean using a soft clean cloth with mild soap and water. Rinse with clean water. After rinsing thoroughly, dry with a soft clean towel. A wax may then be applied.

The surface of these wheels is similar to the painted surface of your vehicle. Do not use strong soaps, chemicals, abrasive polishes, abrasive cleaners, cleaners with acid, or abrasive cleaning brushes on them because you could damage the surface. Do not use chrome polish on aluminum wheels.

Do not take your vehicle through an automatic car wash that has silicone carbide tire cleaning brushes. These brushes can also damage the surface of these wheels.

## Cleaning Tires

To clean your tires, use a stiff brush with tire cleaner.

***Notice:*** **Using petroleum-based tire dressing products on your vehicle may damage the paint finish and/or tires. When applying a tire dressing, always wipe off any overspray from all painted surfaces on your vehicle.**

## Sheet Metal Damage

If your vehicle is damaged and requires sheet metal repair or replacement, make sure the body repair shop applies anti-corrosion material to parts repaired or replaced to restore corrosion protection.

Original manufacturer replacement parts will provide the corrosion protection while maintaining the warranty.

## Finish Damage

Any stone chips, fractures or deep scratches in the finish should be repaired right away. Bare metal will corrode quickly and may develop into major repair expense.

Minor chips and scratches can be repaired with touch-up materials avaliable from your dealer. Larger areas of finish damage can be corrected in your dealer's body and paint shop.

## Underbody Maintenance

Chemicals used for ice and snow removal and dust control can collect on the underbody. If these are not removed, corrosion and rust can develop on the underbody parts such as fuel lines, frame, floor pan and exhaust system even though they have corrosion protection.

At least every spring, flush these materials from the underbody with plain water. Clean any areas where mud and debris can collect. Dirt packed in close areas of the frame should be loosened before being flushed. Your dealer or an underbody car washing system can do this for you.

## Chemical Paint Spotting

Some weather and atmospheric conditions can create a chemical fallout. Airborne pollutants can fall upon and attack painted surfaces on your vehicle. This damage can take two forms: blotchy, ring-shaped discolorations, and small, irregular dark spots etched into the paint surface.

Although no defect in the paint job causes this, GM will repair, at no charge to the owner, the surfaces of new vehicles damaged by this fallout condition within 12 months or 12,000 miles (20 000 km) of purchase, whichever occurs first.

## Vehicle Care/Appearance Materials

See your Saturn retailer for more information on purchasing the following products.

### Vehicle Care/Appearance Materials

| Description | Usage |
|---|---|
| Polishing Cloth Wax-Treated | Interior and exterior polishing cloth. |
| Tar and Road Oil Remover | Removes tar, road oil and asphalt. |
| Chrome Cleaner and Polish | Use on chrome or stainless steel. |
| White Sidewall Tire Cleaner | Removes soil and black marks from whitewalls. |
| Vinyl Cleaner | Cleans vinyl tops, upholstery and convertible tops. |
| Glass Cleaner | Removes dirt, grime, smoke and fingerprints. |
| Chrome and Wire Wheel Cleaner | Removes dirt and grime from chrome wheels and wire wheel covers. |
| Finish Enhancer | Removes dust, fingerprints, and surface contaminants, Spray on wipe off. |

### Vehicle Care/Appearance Materials (cont'd)

| Description | Usage |
|---|---|
| Swirl Remover Polish | Removes swirl marks, fine scratches and other light surface contamination. |
| Cleaner Wax | Removes light scratches and protects finish. |
| Foaming Tire Shine Low Gloss | Cleans, shines and protects in one easy step, no wiping necessary. |
| Wash Wax Concentrate | Medium foaming shampoo. Cleans and lightly waxes. Biodegradable and phosphate free. |
| Spot Lifter | Quickly and easily removes spots and stains from carpets, vinyl and cloth upholstery. |
| Odor Eliminator | Odorless spray odor eliminator used on fabrics, vinyl, leather and carpet. |
| See your Saturn parts department for these products. See *Recommended Fluids and Lubricants on page 6-14*. | |

# Vehicle Identification

## Vehicle Identification Number (VIN)




This is the legal identifier for your vehicle. It appears on a plate in the front corner of the instrument panel, on the driver's side. You can see it if you look through the windshield from outside your vehicle. The VIN also appears on the Vehicle Certification and Service Parts labels and the certificates of title and registration.

### Engine Identification

The 8th character in your VIN is the engine code. This code will help you identify your engine, specifications and replacement parts.

## Service Parts Identification Label

You'll find this label on your spare tire cover. It's very helpful if you ever need to order parts. On this label is:

- your VIN,
- the model designation,
- paint information and
- a list of all production options and special equipment.

Be sure that this label is not removed from the vehicle.

# Electrical System

## Add-On Electrical Equipment

***Notice:*** **Don't add anything electrical to your vehicle unless you check with your dealer first. Some electrical equipment can damage your vehicle and the damage wouldn't be covered by your warranty. Some add-on electrical equipment can keep other components from working as they should.**

Your vehicle has an air bag system. Before attempting to add anything electrical to your vehicle, see *Servicing Your Air Bag-Equipped Vehicle on page 1-58*.

## Windshield Wiper Fuses

The windshield wiper motor is protected by a circuit breaker and a fuse. If the motor overheats due to heavy snow or ice, the wiper will stop until the motor cools. If the overload is caused by some electrical problem, have it fixed.

## Power Windows and Other Power Options

Circuit breakers in the fuse panel protect the power windows and other power accessories. When the current load is too heavy, the circuit breaker opens and closes, protecting the circuit until the problem is fixed.

## Fuses and Circuit Breakers

The wiring circuits in your vehicle are protected from short circuits by a combination of fuses. This greatly reduces the chance of fires caused by electrical problems.

Look at the silver-colored band inside the fuse. If the band is broken or melted, replace the fuse. Be sure you replace a bad fuse with a new one of the identical size and rating.

## Instrument Panel Fuse Block



Some fuses are in a fuse block on the driver's side of the vehicle, near the driver's right leg. Loosen the screw on the cover and remove the cover.

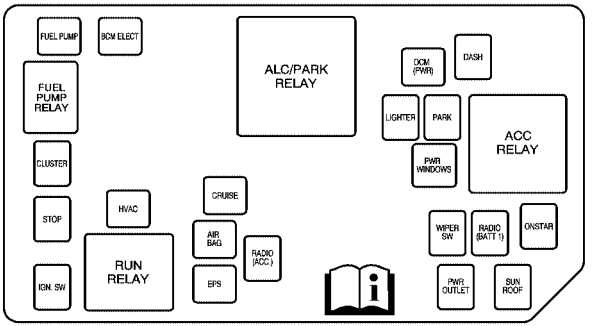


| Fuses | Usage |
|---|---|
| AIR BAG | Air bags, Sensing and Diagnostic Module (SDM) |
| ACCOMMO-DATION INTERFACE/ ONSTAR | Entertainment, Mobile Communications, OnStar |
| CRUISE | Cruise Control Module, Clutch Start Switch |
| EPS/CRUISE | Cruise Control Switches, EPS Unit |

| Fuses | Usage |
|---|---|
| FUEL PUMP | Fuel Pump Relay |
| HVAC | Climate Control |
| CLUSTER | Instrument Panel Cluster |
| LIGHTER | Cigar Lighter |
| RADIO (BATT1) | Radio Receiver, Entertainment Memory |
| RADIO (ACC) | Radio Receiver, Entertainment |
| SUNROOF | Power Sunroof, OnStar Mirror |
| WIPER SW | Windshield Wipers and Washers, Transaxle Shift Lock Control Switch |
| DASH | Instrument Panel, Dimming Switch |
| IGN SW | Ignition Switch |
| PARK | Headlamp Switch |
| PWR OUTLET | Auxiliary Power Outlet |

| Fuses | Usage |
|---|---|
| PWR WINDOWS | Power Window Switches |
| STOP | Stoplamp (Brake) Switch |
| BCM ELECT | Ignition Switch, Body Control Module (BCM) |
| BMC (PWR) | Entry Control, Trunk Release |

| Relay | Usage |
|---|---|
| RUN | Climate Control (HVAC Blower, Control Heads) |
| ACC | Power Windows, Sunroof, Radio, Wiper/Washer Switch, Accessory Power Outlet |
| FUEL PUMP | Fuel Pump |
| ALC/PARK | OnStar, Radio, Instrument Panel Cluster, Body Control Module (Entry Control), Cigar Lighter, Headlamp Switch, License Lamp |

## Engine Compartment Fuse Block (2.2L L4 Engine)

Some fuses are in a fuse block in the engine compartment on the driver's side of the vehicle. See *Engine Compartment Overview on page 5-12* for more information on location.

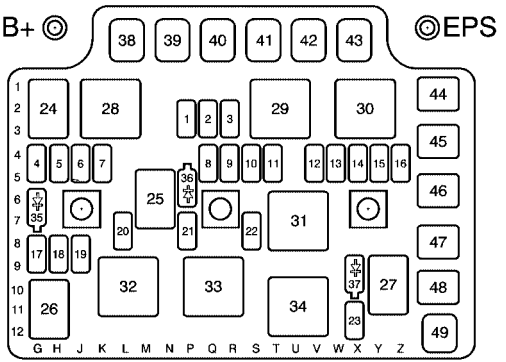


| Fuses | Usage |
|---|---|
| 1 ECM/TCM | Engine Control Module, Transmission Control Module |
| 4 HDLP-RH | Passenger's Side Headlamp |
| 5 A/C | Air Conditioning Clutch Relay |
| 8 ABS2 | Anti-Lock Brake System, Traction Control Module |
| 9 ECM | Engine Control Module |
| 10 ERLS | Canister Purge Solenoid, Canister Vent Solenoid, Low Coolant Switch, Oxygen Sensors |
| 11 IGN | Electric Ignition Control Module, Charging System, Neutral Stop Back-Up Switch |
| 13 TRANS2 | Transaxle (VTi Variable) |
| 14 TRANS1 | Transmission Control Module, Neutral Stop Back-Up |
| 15 BACK-UP | PRNDIL, Back-up Switch |
| 16 INJECTORS | Fuel Injectors (Cylinder 1, 2, 3, 4) |
| 17 FOG | Fog Lamp Micro Relay |

| Fuses | Usage |
|---|---|
| 18 HDLP-LH | Driver's Side Headlamp |
| 19 WIPER | Wiper Mini Relay |
| 20 HORN | Horn Micro Relay |
| 21 PREM AUDIO | Entertainment, Premium Radio Amplifier |
| 22 ABS | Anti-Lock Brake System, Traction Control Module |
| 23 RR DEFOG | Rear Defog Mini Relay |
| 38 RUN/CRANK | Ignition 1 Mini Relay |
| 39 IP BATT1 | Body Control Module |
| 40 ABS | Anti-Lock Brake System, Traction Control Module |
| 41 IP BATT2 | Body Control Module |
| 42 EPS2 | Electric Power Steering |
| 43 EPS1 | Electric Power Steering |
| 45 COOLING FAN | Cooling Fan Mini Relay |
| 46 CRANK | Powertrain Control Module Mini Relay |

| Fuses | Usage |
|---|---|
| 47 IP BATT 1A | Body Control Module |
| 48 RUN (IGN 3) | Body Control Module |

| Relays | Usage |
|---|---|
| 24 A/C | Air Conditioning Clutch |
| 25 HORN | Horn |
| 26 FOG LAMP | Fog Lamps |
| 28 RUN/CRANK | Body Control Module |
| 30 COOLING FAN | Engine Cooling Fan |
| 31 PCM CONT | ECM |
| 32 WIPER1 | Wiper System |
| 33 WIPER2 | Wiper System |
| 34 REAR DEFOG | Rear Window Defroster |

| Diodes | Usage |
|---|---|
| 35 A/C | Air Conditioning Diode |
| 37 WIPER | Wiper Diode |

## Engine Compartment Fuse Block (2.0L Supercharged Engine)

Some fuses are in a fuse block in the engine compartment on the driver's side of the vehicle. See *Engine Compartment Overview on page 5-12* for more information on location.

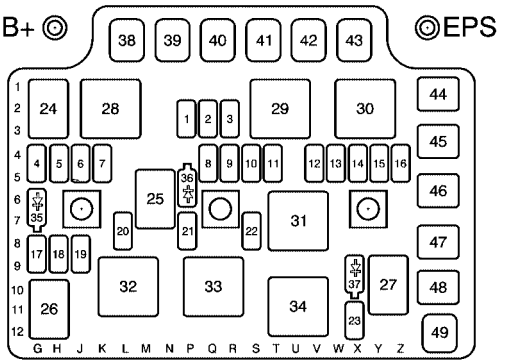


| Fuses | Usage |
|---|---|
| 1 ECM | Engine Control Module |
| 4 RH HDLP | Passenger's Side Headlamp |
| 5 A/C | Air Conditioning Clutch Relay |
| 8 ABS | Anti-Lock Brake System |
| 9 ECM/ETC | Engine Control Module |
| 10 EMISS | Canister Purge Solenoid, Mass Air Flow Sensor, Low Coolant Switch, Oxygen Sensors |
| 11 IGN | Ignition Coils (1,2,3,4) |
| 13 ECM | Engine Control Module |
| 14 BOOST | Engine Boost Solenoid |
| 15 BACK-UP | Back-up Switch |
| 16 INJECTORS | Fuel Injectors (Cylinder 1, 2, 3, 4) |
| 18 LH HDLP | Driver's Side Headlamp |
| 19 WIPER | Wiper Mini Relay |
| 20 HORN | Horn Micro Relay |
| 21 RADIO | Radio |

| Fuses | Usage |
|---|---|
| 22 ABS | Anti-Lock Brake System |
| 23 RR DEFOG | Rear Defog Mini Relay |
| 38 RUN/CRANK | Ignition 1 Mini Relay |
| 39 IP BATT1 | Body Control Module |
| 40 ABS | Anti-Lock Brake System |
| 41 IP BATT2 | Body Control Module |
| 43 EPS | Electric Power Steering |
| 44 COOLING FAN 2 | Cooling Fan Mini Relay |
| 45 COOLING FAN 1 | Cooling Fan Mini Relay |
| 46 CRANK | Crank |
| 47 IP BATT 1A | Body Control Module |
| 48 RUN (IGN 3) | Body Control Module |

| Relays | Usage |
|---|---|
| 24 A/C CLUTCH | Air Conditioning Clutch |
| 25 HORN | Horn |
| 27 AFTER COOLER PUMP | After Cooler Pump |
| 28 RUN/CRANK | Body Control Module |
| 29 POWERTRAIN | Powertrain |
| 30 COOLING FAN 1 | Engine Cooling Fan |
| 31 ECM CONT | Starter Solenoid |
| 32 WIPER1 | Wiper System |
| 33 WIPER2 | Wiper System |
| 34 REAR DEFOG | Rear Window Defroster |

| Diodes | Usage |
|---|---|
| 35 A/C | Air Conditioning Diode |
| 37 WIPER | Wiper Diode |

# Capacities and Specifications

The following approximate capacities are given in English and metric conversions. See *Recommended Fluids and Lubricants on page 6-14* for more information.

| Application | Capacities | |
|---|---|---|
| | **English** | **Metric** |
| Air Conditioning Refrigerant R134a<br>Use Refrigerant Oil, R134a Systems | 0.9 lbs. | 0.41 kg |
| Cooling System | 6.9 quarts | 6.5 L |
| **Engine Oil with Filter** | | |
| 2.2L L4 | 4.0 quarts | 4.8 L |
| 2.0L Supercharged | 6.75 quarts | 6.4 L |
| Fuel Tank | 13.5 gallons | 50.5 L |
| **Transaxle** | | |
| Manual | 1.8 quarts | 1.7 L |
| Five-Speed Automatic | 4.2 quarts | 4.0 L |
| VTi Variable | 6.9 quarts | 6.5 L |
| Wheel Nut Torque | 92 lb ft | 125 N•m |
| All capacities are approximate. When adding, be sure to fill to the approximate level, as recommended in this manual. Recheck fluid level after filling. | | |

## Engine Specifications

| Engine | VIN Code | Transaxle | Spark Plug Gap |
|---|---|---|---|
| 2.2L L4 (L61) | F | Five-speed manual<br>Five-speed automatic<br>VTi variable | 0.045 inches (1.0 mm) |
| 2.0L Supercharged | P | Five-speed manual | 0.059 inches (1.5 mm) |

## NOTES

# Section 6 Maintenance Schedule

**Maintenance Schedule** .....6-2
Introduction .....6-2
Maintenance Requirements .....6-2
Your Vehicle and the Environment .....6-2
Using Your Maintenance Schedule .....6-2
Scheduled Maintenance .....6-4
Additional Required Services .....6-6
Maintenance Footnotes .....6-8
Owner Checks and Services .....6-9
At Each Fuel Fill .....6-10
At Least Once a Month .....6-10
At Least Once a Year .....6-11
Recommended Fluids and Lubricants .....6-14
Normal Maintenance Replacement Parts .....6-16
Engine Drive Belt Routing .....6-17
Maintenance Record .....6-18

# Maintenance Schedule

## Introduction

**Important: Keep engine oil at the proper level and change as recommended.**

## Maintenance Requirements

***Notice:*** **Maintenance intervals, checks, inspections, replacement parts and recommended fluids and lubricants as prescribed in this manual are necessary to keep your vehicle in good working condition. Any damage caused by failure to follow scheduled maintenance may not be covered by warranty.**

## Your Vehicle and the Environment

Proper vehicle maintenance not only helps to keep your vehicle in good working condition, but also helps the environment. All recommended maintenance is important. Improper vehicle maintenance can even affect the quality of the air we breathe. Improper fluid levels or the wrong tire inflation can increase the level of emissions from your vehicle. To help protect our environment, and to keep your vehicle in good condition, be sure to maintain your vehicle properly.

## Using Your Maintenance Schedule

We at Saturn want to help you keep your vehicle in good working condition. But we do not know exactly how you will drive it. You may drive very short distances only a few times a week. Or you may drive long distances all the time in very hot, dusty weather. You may use your vehicle in making deliveries. Or you may drive it to work, to do errands or in many other ways.

Because of all the different ways people use their vehicles, maintenance needs vary. You may need more frequent checks and replacements. So please read the following and note how you drive. If you have any questions on how to keep your vehicle in good condition, see your Saturn retailer.

This schedule is for vehicles that:

- carry passengers and cargo within recommended limits. You will find these limits on the tire and loading information label. See *Loading Your Vehicle on page 4-33*.
- are driven on reasonable road surfaces within legal driving limits.
- use the recommended fuel. See *Gasoline Octane on page 5-5*.

The services in *Scheduled Maintenance on page 6-4* should be performed when indicated. See *Additional Required Services on page 6-6* and *Maintenance Footnotes on page 6-8* for further information.

**⚠ CAUTION:**

**Performing maintenance work on a vehicle can be dangerous. In trying to do some jobs, you can be seriously injured. Do your own maintenance work only if you have the required know-how and the proper tools and equipment for the job. If you have any doubt, see your GM Goodwrench dealer to have a qualified technician do the work.**

Some maintenance services can be complex. So, unless you are technically qualified and have the necessary equipment, you should have your Saturn retailer do these jobs.

When you go to your Saturn retailer for your service needs, you will know that Saturn-trained and supported service technicians will perform the work using genuine Saturn parts.

If you want to get service information, see *Service Publications Ordering Information on page 7-10*.

*Owner Checks and Services on page 6-9* tells you what should be checked, when to check it and what you can easily do to help keep your vehicle in good condition.

The proper replacement parts, fluids and lubricants to use are listed in *Recommended Fluids and Lubricants on page 6-14* and *Normal Maintenance Replacement Parts on page 6-16*. When your vehicle is serviced, make sure these are used. All parts should be replaced and all necessary repairs done before you or anyone else drives the vehicle. We recommend the use of genuine Saturn parts.

## Scheduled Maintenance

When the CHG OIL message comes on, it means that service is required for your vehicle. Have your vehicle serviced as soon as possible within the next 600 miles (1 000 km). It is possible that, if you are driving under the best conditions, the engine oil life system may not indicate that vehicle service is necessary for over a year. However, your engine oil and filter must be changed at least once a year and at this time the system must be reset. Your Saturn retailer has Saturn-trained service technicians who will perform this work using genuine Saturn parts and reset the system.

If the engine oil life system is ever reset accidentally, you must service your vehicle within 3,000 miles (5 000 km) since your last service. Remember to reset the oil life system whenever the oil is changed. See *Engine Oil on page 5-15* for information on the Engine Oil Life System and resetting the system.

When the CHG OIL message appears, certain services, checks and inspections are required. Required services are described in the following for "Maintenance I" and "Maintenance II." Generally, it is recommended that your first service be Maintenance I, your second service be Maintenance II and that you alternate Maintenance I and Maintenance II thereafter. However, in some cases, Maintenance II may be required more often.

**Maintenance I** — Use Maintenance I if the CHG OIL message comes on within ten months since vehicle was purchased or Maintenance II was performed.

**Maintenance II** — Use Maintenance II if the previous service performed was Maintenance I. Always use Maintenance II whenever the message comes on ten months or more since the last service or if the message has not come on at all for one year.

## Scheduled Maintenance

| Service | Maintenance I | Maintenance II |
|---|---|---|
| Change engine oil and filter. Reset oil life system. See *Engine Oil on page 5-15*. *An Emission Control Service.* | • | • |
| Visually check for any leaks or damage. *See footnote (j).* | • | • |
| Inspect engine air cleaner filter. If necessary, replace filter. See *Engine Air Cleaner/Filter on page 5-22*. *An Emission Control Service. See footnote †.* | • | • |
| Rotate tires and check inflation pressures and wear. See *Tires on page 5-58*. | • | • |
| Inspect brake system. *See footnote (a).* | • | • |
| Check engine coolant and windshield washer fluid levels and add fluid as needed. | • | • |
| Perform any needed additional services. See “Additional Required Services” in this section. | • | • |
| Inspect suspension and steering components. *See footnote (b).* | | • |
| Inspect engine cooling system. *See footnote (c).* | | • |
| Inspect wiper blades. *See footnote (d).* | | • |
| Inspect restraint system components. *See footnote (e).* | | • |
| Lubricate body components. *See footnote (f).* | | • |
| Replace passenger compartment air filter. *See footnote (k).* | | • |
| Inspect throttle system. *See footnote (g).* | | • |

## Additional Required Services

The following services should be performed at the first maintenance service (I or II) after the indicated miles (kilometers) shown for each item.

**Additional Required Services**

| Service and Miles (Kilometers) | 25,000 (41 500) | 50,000 (83 000) | 75,000 (125 000) | 100,000 (166 000) | 125,000 (207 500) | 150,000 (240 000) |
|---|---|---|---|---|---|---|
| Inspect fuel system for damage or leaks. | • | • | • | • | • | • |
| Inspect exhaust system for loose or damaged components. | • | • | • | • | • | • |
| Replace engine air cleaner filter. See *Engine Air Cleaner/Filter on page 5-22*. *An Emission Control Service.* | • | • | • | • | • | • |
| VTi variable transaxle: Add DEX-CVT additive. | | • | | • | | • |
| Change automatic transaxle or VTi variable transaxle fluid (severe service). *See footnote (h).* | | • | | • | | • |
| Change automatic transaxle or VTi variable transaxle fluid (normal service). | | | | • | | |

## Additional Required Services (cont'd)

| Service and Miles (Kilometers) | 25,000 (41 500) | 50,000 (83 000) | 75,000 (125 000) | 100,000 (166 000) | 125,000 (207 500) | 150,000 (240 000) |
|---|---|---|---|---|---|---|
| Replace spark plugs. *An Emission Control Service.* | | | | • | | |
| Replace engine fuel filter. *An Emission Control Service. See footnote †.* | | | | • | | |
| Engine cooling system service (or every 5 years, whichever occurs first). *An Emission Control Service. See footnote (i).* | | | | | | • |
| Inspect engine accessory drive belt. *An Emission Control Service.* | • | • | • | • | • | • |
| Red Line only: Replace engine accessory drive belt. *An Emission Control Service.* | | • | | • | | • |

## Maintenance Footnotes

† *The U.S. Environmental Protection Agency or the California Air Resources Board has determined that the failure to perform this maintenance item will not nullify the emission warranty or limit recall liability prior to the completion of the vehicle's useful life. We, however, urge that all recommended maintenance services be performed at the indicated intervals and the maintenance be recorded.*

(a) *Visually inspect brake lines and hoses for proper hook-up, binding, leaks, cracks, chafing, etc. Inspect disc brake pads for wear and rotors for surface condition. Inspect drum brake linings for wear or cracks. Inspect other brake parts, including drums, wheel cylinders, calipers, parking brake, etc.*

(b) *Visually inspect front and rear suspension and steering system for damaged, loose or missing parts or signs of wear.*

(c) *Visually inspect hoses and have them replaced if they are cracked, swollen or deteriorated. Inspect all pipes, fittings and clamps; replace with genuine Saturn parts as needed. To help ensure proper operation, a pressure test of the cooling system and pressure cap and cleaning the outside of the radiator and air conditioning condenser is recommended at least once a year.*

(d) *Visually inspect wiper blades for wear or cracking. Replace blade inserts that appear worn or damaged or that streak or miss areas of the windshield.*

(e) *Make sure the safety belt reminder light and all your belts, buckles, latch plates, retractors and anchorages are working properly. Look for any other loose or damaged safety belt system parts. If you see anything that might keep a safety belt system from doing its job, have it repaired. Have any torn or frayed safety belts replaced. Also look for any opened or broken air bag coverings, and have them repaired or replaced. (The air bag system does not need regular maintenance.)*

(f) *Lubricate all key lock cylinders, door hinges and latches, hood hinges and latches, glove box hinges, sunroof (if equipped) and any folding seat hardware. More frequent lubrication may be required when exposed to a corrosive environment. Applying silicone grease on weatherstrips with a clean cloth will make them last longer, seal better and not stick or squeak.*

(g) *Check system for interference or binding and for damaged or missing parts. Replace parts as needed. Replace any components that have high effort or excessive wear. Do not lubricate accelerator or cruise control cables.*

(h) *Change automatic transaxle or VTi variable transaxle fluid and filter if the vehicle is mainly driven under one or more of these conditions:*

- *In heavy city traffic where the outside temperature regularly reaches 90°F (32°C) or higher.*
- *In hilly or mountainous terrain.*
- *When doing frequent trailer towing.*
- *Uses such as found in taxi, police or delivery service.*

(i) *Drain, flush and refill cooling system. See Engine Coolant on page 5-26* for what to use. Inspect hoses. Clean radiator, condenser, pressure cap and filler neck. Pressure test the cooling system and pressure cap.

(j) *A fluid loss in any vehicle system could indicate a problem. Have the system inspected and repaired and the fluid level checked. Add fluid if needed.*

(k) *Or every 12 months, whichever occurs first. If you drive regularly under dusty conditions, the filter may require replacement more often.*

## Owner Checks and Services

These owner checks and services should be performed at the intervals specified to help ensure the safety, dependability and emission control performance of your vehicle. Your Saturn retailer can assist you with these checks and services.

Be sure any necessary repairs are completed at once. Whenever any fluids or lubricants are added to your vehicle, make sure they are the proper ones, as shown in *Recommended Fluids and Lubricants on page 6-14*.

## At Each Fuel Fill

*It is important to perform these underhood checks at each fuel fill.*

### Engine Oil Level Check

Check the engine oil level and add the proper oil if necessary. See *Engine Oil on page 5-15* for further details.

***Notice:*** **It is important to check your oil regularly and keep it at the proper level. Failure to keep your engine oil at the proper level can cause damage to your engine not covered by your warranty.**

### Engine Coolant Level Check

Check the engine coolant level and add DEX-COOL® coolant mixture if necessary. See *Engine Coolant on page 5-26* for further details.

### Windshield Washer Fluid Level Check

Check the windshield washer fluid level in the windshield washer tank and add the proper fluid if necessary.

## At Least Once a Month

### Tire Inflation Check

Visually inspect your tires and make sure tires are inflated to the correct pressures. Do not forget to check your spare tire. See *Tires on page 5-58* for further details.

### Cassette Tape Player Service

Clean cassette tape player. Cleaning should be done every 50 hours of tape play. See *Audio System(s) on page 3-46* for further details.

## At Least Once a Year

### Starter Switch Check

**⚠ CAUTION:**

**When you are doing this inspection, the vehicle could move suddenly. If the vehicle moves, you or others could be injured.**

1. Before you start, be sure you have enough room around the vehicle.
2. Firmly apply both the parking brake and the regular brake. See *Parking Brake on page 2-30* if necessary.

   Do not use the accelerator pedal, and be ready to turn off the engine immediately if it starts.
3. On automatic transaxle vehicles, try to start the engine in each gear. The starter should work only in PARK (P) or NEUTRAL (N). If the starter works in any other position, contact your Saturn retailer for service.

   On manual transaxle vehicles, put the shift lever in Neutral (N), push the clutch pedal down halfway and try to start the engine. The starter should work only when the clutch pedal is pushed down all the way to the floor. If the starter works when the clutch is not pushed all the way down, contact your Saturn retailer for service.

## Automatic Transaxle Shift Lock Control System Check

**⚠ CAUTION:**

**When you are doing this inspection, the vehicle could move suddenly. If the vehicle moves, you or others could be injured.**

1. Before you start, be sure you have enough room around the vehicle. It should be parked on a level surface.
2. Firmly apply the parking brake. See *Parking Brake on page 2-30* if necessary.

   Be ready to apply the regular brake immediately if the vehicle begins to move.
3. With the engine off, turn the key to the RUN position, but do not start the engine. Without applying the regular brake, try to move the shift lever out of PARK (P) with normal effort. If the shift lever moves out of PARK (P), contact your Saturn retailer for service.

## Ignition Transaxle Lock Check

While parked, and with the parking brake set, try to turn the ignition key to OFF in each shift lever position.

- With an automatic transaxle, the key should turn to OFF only when the shift lever is in PARK (P). The key should come out only in OFF.
- With a manual transaxle, the key should come out only in OFF.

Contact your Saturn retailer if service is required.

### Parking Brake and Automatic Transaxle Park (P) Mechanism Check

**⚠ CAUTION:**

**When you are doing this check, your vehicle could begin to move. You or others could be injured and property could be damaged. Make sure there is room in front of your vehicle in case it begins to roll. Be ready to apply the regular brake at once should the vehicle begin to move.**

Park on a fairly steep hill, with the vehicle facing downhill. Keeping your foot on the regular brake, set the parking brake.

- To check the parking brake's holding ability: With the engine running and transaxle in NEUTRAL (N), slowly remove foot pressure from the regular brake pedal. Do this until the vehicle is held by the parking brake only.
- To check the PARK (P) mechanism's holding ability: With the engine running, shift to PARK (P). Then release the parking brake followed by the regular brake.

Contact your Saturn retailer if service is required.

## Underbody Flushing Service

At least every spring, use plain water to flush any corrosive materials from the underbody. Take care to clean thoroughly any areas where mud and other debris can collect.

## Recommended Fluids and Lubricants

Fluids and lubricants identified below by name, part number or specification may be obtained from your dealer.

| Usage | Fluid/Lubricant |
|---|---|
| Engine Oil (2.2L engine) | Engine oil which meets GM Standard GM6094M and displays the American Petroleum Institute Certified for Gasoline Engines starburst symbol. To determine the proper viscosity for your vehicle's engine, see *Engine Oil on page 5-15*. |
| Engine Oil (2.0L Supercharged engine) | The engine requires a special engine oil meeting GM Standard GM4718M. Oils meeting this standard may be identified with the American Petroleum Institute Certified for Gasoline Engines starburst symbol. However, not all synthetic API oils with the starburst symbol will meet this GM standard. You should look for and use only an oil that meets GM Standard GM4718M. For the proper viscosity, see *Engine Oil on page 5-15*. |
| Engine Coolant | 50/50 mixture of clean, drinkable water and use only DEX-COOL® Coolant. See *Engine Coolant on page 5-26*. |

| Usage | Fluid/Lubricant |
|---|---|
| Hydraulic Brake System | Delco Supreme 11 Brake Fluid or equivalent DOT-3 brake fluid. |
| Windshield Washer Solvent | Optikleen® Washer Solvent. |
| Parking Brake Cable Guides | Chassis Lubricant (GM Part No. 12377985, in Canada 88901242) or lubricant meeting requirements of NLGI #2, Category LB or GC-LB. |
| Hydraulic Clutch System | Delco Supreme 11 Brake Fluid or equivalent DOT-3 brake fluid (Saturn Part No. 21013073). |
| Manual Transaxle | DEXRON III Manual Transaxle Lubricant (Part No. 21019223). |
| 5-Speed Automatic Transaxle | Saturn T-IV Fluid (Part No. 22689186). |
| VTi Variable Transaxle | DEX-CVT Fluid (Part No. 22688912). |
| VTi Variable Transaxle Additive | DEX-CVT Fluid Additive (Part No. 22697447). |

| Usage | Fluid/Lubricant |
|---|---|
| Key Lock Cylinders | Multi-Purpose Lubricant, Superlube (GM Part No. U.S. 12346241, in Canada 10953474). |
| Hood Latch Assembly, Secondary Latch, Pivots, Spring Anchor and Release Pawl | Lubriplate Lubricant Aerosol (Saturn Part No. 21038869 or GM Part No. U.S. 12346293, in Canada 992723) or lubricant meeting requirements of NLGI #2, Category LB or GC-LB. |
| Hood, Trunk and Door Hinges | Multi-Purpose Lubricant, Superlube (GM Part No. U.S. 12346241, in Canada 10953474). |
| Sunroof Track | Lubriplate Lubricant Aerosol (Saturn Part No. 21038869 or GM Part No. U.S. 12346293, in Canada 992723) or lubricant meeting requirements of NLGI #2, Category LB or GC-LB. |
| Weatherstrip Conditioning | Dielectric Silicone Grease (GM Part No. U.S. 12345579, in Canada 992887). |

## Normal Maintenance Replacement Parts

Replacement parts identified below by name, part number, or specification can be obtained from your retailer.

| Part | Saturn Part Number | AC Delco Part Number |
|---|---|---|
| **Engine Air Cleaner/Filter** | | |
| 2.2L L4 Engine | 22679620 | — |
| 2.0L Supercharged | — | — |
| **Engine Oil Filter** | | |
| 2.2L L4 Engine | 22685727 | — |
| 2.0L Supercharged | 12579143 | — |
| Passenger Compartment Air Filter Element | 52493319 | — |
| **Spark Plugs** | | |
| 2.2L L4 Engine | 25337472 | 41–981 |
| 2.0L Supercharged | 12787099 | — |
| **Windshield Wiper Blade** | | |
| Driver's Side Length – 21.5 inches (54.6 cm) | 22660359 | — |
| Passenger's Side Length – 20.0 inches (50.8 cm) | 22685192 | |

## Engine Drive Belt Routing

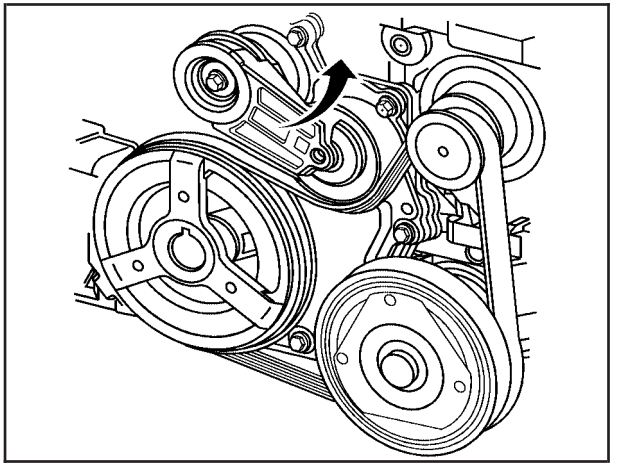

2.2L Four Cylinder (L61) Engine

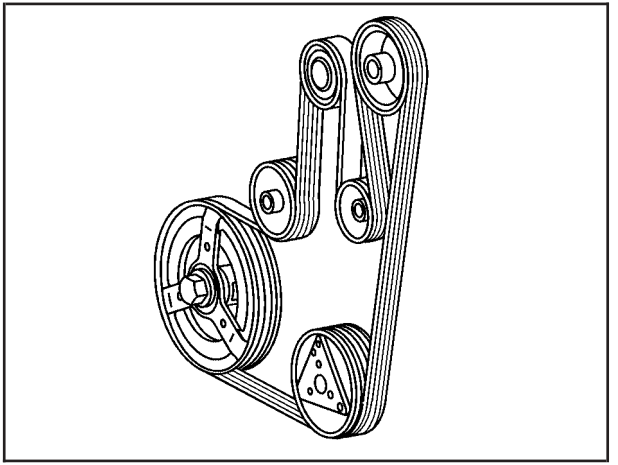

2.0L Supercharged (LSJ) Engine

## Maintenance Record

After the scheduled services are performed, record the date, odometer reading, who performed the service and the type of services performed in the boxes provided. See *Maintenance Requirements on page 6-2* in this section. Any additional information from *Owner Checks and Services on page 6-9* can be added on the following record pages. Also, you should retain all maintenance receipts.

### Maintenance Record

| Date | Odometer Reading | Serviced By | Maintenance I or Maintenance II | Services Performed |
|---|---|---|---|---|
| | | | | |
| | | | | |
| | | | | |
| | | | | |
| | | | | |
| | | | | |
| | | | | |
| | | | | |

## Maintenance Record (cont'd)

| Date | Odometer Reading | Serviced By | Maintenance I or Maintenance II | Services Performed |
|---|---|---|---|---|
| | | | | |
| | | | | |
| | | | | |
| | | | | |
| | | | | |
| | | | | |
| | | | | |
| | | | | |
| | | | | |
| | | | | |
| | | | | |

## Maintenance Record (cont'd)

| Date | Odometer Reading | Serviced By | Maintenance I or Maintenance II | Services Performed |
|---|---|---|---|---|
| | | | | |
| | | | | |
| | | | | |
| | | | | |
| | | | | |
| | | | | |
| | | | | |
| | | | | |
| | | | | |
| | | | | |
| | | | | |

# Section 7 Customer Assistance and Information

**Customer Assistance and Information** .....7-2
Customer Satisfaction Procedure .....7-2
Online Owner Center .....7-4
Customer Assistance for Text Telephone (TTY) Users .....7-4
GM Mobility Program for Persons with Disabilities .....7-5
Roadside Assistance Program .....7-5
Vehicle Data Collection and Event Data Recorders .....7-7
**Reporting Safety Defects** .....7-9
Reporting Safety Defects to the United States Government .....7-9
Reporting Safety Defects to the Canadian Government .....7-9
Reporting Safety Defects to Saturn .....7-9
Service Publications Ordering Information .....7-10

# Customer Assistance and Information

## Customer Satisfaction Procedure

Your satisfaction and goodwill are important to your retailer and to Saturn. Together we are committed to providing our customers with unparalleled service, before, during and after the purchase of a Saturn vehicle, for total customer satisfaction. We call this the Saturn Difference. Normally, any concerns with the sales transaction or the operation of your vehicle will be resolved by your retailer's sales or service departments. If, for any reason, your ownership experience falls below your expectations, we suggest you take the following action:

**STEP ONE:** Contact the Retail Customer Assistance Liaison. Any member of the retail management team has the authority and the desire to resolve your concerns. Normally, concerns can be quickly resolved at this level.

**STEP TWO:** Should you need additional assistance, contact the Saturn Customer Assistance Center by calling 1-800-553–6000. In Canada, contact the Saturn Customer Communication Centre at 1-800-263-1999.

A Saturn Customer Assistance Center team member will handle your call and assist in providing product and warranty information, the nearest retailer location, roadside assistance, brochures, literature and discuss any concerns you may have.

We encourage you to call the toll-free number in order to give your inquiry prompt attention. Please have the following information available to give the Customer Assistance Representative:

- Vehicle Identification Number. (You will find this 17-digit number on the vehicle registration or title, on the upper driver's side corner of the dash or on your roadside assistance key card.)
- The name of your selling and servicing retail facility.
- Vehicle delivery date and present mileage.
- Your daytime and evening phone numbers.

If you wish to write to the Saturn Customer Assistance Center, our address is:

Saturn Customer Assistance Center
100 Saturn Parkway
Mail Code 371-999-S24 Spring Hill, TN 37174-1500

In Canada, write to:

Saturn Customer Communication Centre
General Motors of Canada Ltd.
1908 Colonel Sam Drive Oshawa, Ontario L1H 8P7

When contacting Saturn, please remember that your concern will likely be resolved at a retailer's facility. That is why we suggest you follow Step One first if you have a concern.

**STEP THREE:** Both Saturn and its retailers are committed to making sure you are completely satisfied with your Saturn vehicle. However, if you continue to remain unsatisfied after following the procedure outlined in Steps One and Two, Saturn and its retailers offer the additional assistance of a neutral party through our voluntary participation in a mediation/arbitration program called BBB Auto Line. Canadian owners refer to your Warranty and Owner Assistance Information booklet, located in the front cover pocket of your owner's handbook, for information on the Canadian Motor Vehicle Arbitration Plan (CAMVAP).

The BBB Auto Line Program is an out-of-court program administered by the Council of Better Business Bureaus to settle automotive disputes regarding vehicle repairs or the interpretation of the New Vehicle Limited Warranty. This program is available at no cost to you, our customer.

We ask that you not resort to BBB Auto Line until after Saturn and its retailers have been given the opportunity to satisfy your vehicle concerns. However, U.S. residents may file a claim at any time by contacting your local Better Business Bureau at 1-800-955-5100.

Although you may be required to resort to this informal dispute resolution program prior to filing a court action, use of the program is free of charge and your case will generally be heard within 40 days. If you do not agree with the decision given in your case, you may reject it and proceed with any other venue for relief available to you.

You may contact the BBB Auto Line Program by using the toll-free telephone number or by writing them at the following address:

BBB Auto Line Program
Council of Better Business Bureaus, Inc.
4200 Wilson Boulevard
Suite 800
Arlington, VA 22203-1804

This program is available in all 50 states and the District of Columbia. Eligibility is limited by vehicle age, mileage and other factors. Saturn Corporation reserves the right to change eligibility limitations and/or discontinue its participation in this program.

## Online Owner Center

The Owner Center is a resource for your GM ownership needs. You can find your specific vehicle information all in one place.

**The Owner Center allows you to:**

- Get e-mail service reminders.
- Access information about your specific vehicle, including tips and videos and an electronic version of this owner's manual. (United States only)
- Keep track of your vehicle's service history and maintenance schedule.
- Find GM dealers for service nationwide.
- Receive special promotions and privileges only available to members. (United States only)

Refer to the web for updated information.

To register your vehicle, visit www.MyGMLink.com. (United States) or My GM Canada within www.gmcanada.com (Canada).

## Customer Assistance for Text Telephone (TTY) Users

To assist owners who have hearing difficulties, Saturn has installed special TDD (Telecommunication Devices for the Deaf) equipment in its Saturn Customer Assistance Center.

Any hearing- or speech-impaired customer who has access to a TDD or to a conventional Text Telephone (TTY) can communicate with Saturn by dialing 1-800-TDD-6000. TTY users in Canada may dial 1-800-263-3830.

## GM Mobility Program for Persons with Disabilities



This program, available to qualified applicants, can reimburse you up to $1,000 toward eligible aftermarket driver or passenger adaptive equipment you may require for your vehicle (hand controls, wheelchair/scooter lifts, etc.).

This program can also provide you with free resource information, such as area driver assessment centers and mobility equipment installers. The offer is available for a limited period of time from the date of vehicle purchase/lease.

For more details, or to determine your vehicle's eligibility, see your Saturn retailer or call the Saturn Customer Assistance Center at 1-800-553-6000. Text telephone (TTY) users, call 1-800-833-6000.

In Canada, customers may call the Saturn Customer Communication Centre at 1-800-263-1999. TTY users in Canada may call 1-800-263-3830.

## Roadside Assistance Program

### Security While You Travel

For vehicles purchased in the U.S. call 1-800-553-6000 (TTY: 1-800-833-6000).

For vehicles purchased in Canada call 1-800-268-6800.

As the proud owner of a new Saturn vehicle, you are automatically enrolled in the Saturn Roadside Assistance Program. This value-added service is intended to provide you with peace of mind as you drive in the city or travel the open road. Saturn's Roadside Assistance toll-free number is staffed by courteous and capable Roadside Assistance Representatives who are available 24 hours a day, 365 days a year.

We will provide the following services during the Bumper-to-Bumper warranty period at no expense to you:

- **Fuel Delivery:** Delivery of enough fuel ($5 maximum) for the customer to get to the nearest service station.
- **Lock-out Service (identification required):** Replacement keys or locksmith service will be covered at no charge if you are unable to gain entry into your vehicle. Delivery of the replacement key will be covered within 10 miles.
- **Emergency Tow:** Tow to the nearest Saturn retailer for warranty service or in the event of a vehicle-disabling accident. Assistance when the vehicle is mired in sand, mud or snow.
- **Flat Tire Change:** Installation of a spare tire will be covered at no charge. (The customer is responsible for the repair or replacement of the tire if not covered by a warrantable failure.)
- **Jump Start:** No-start occurrences which require a battery jump start will be covered at no charge.
- **Saturn Retailer Locator Service**

In many instances, mechanical failures are covered under Saturn's Bumper-to-Bumper warranty. However, when other services are utilized, our Roadside Assistance Representatives will explain any payment obligations you might incur.

For prompt and efficient assistance when calling, please provide the following to the Roadside Assistance Representatives:

- Your name, home address, and home telephone number
- Telephone number of your location
- Location of the vehicle
- Model, year, color, and license plate number
- Mileage, Vehicle Identification Number and delivery date of the vehicle
- Description of the problem

While we hope you never have the occasion to use our service, it is added security while traveling for you and your family. Remember we are only a phone call away. Saturn Roadside Assistance: 1-800-553-6000; text telephone (TTY) users, call 1-800-833-6000.

Saturn reserves the right to limit services or reimbursement to an owner or driver when, in Saturn's judgment, the claims become excessive in frequency or type of occurrence.

Roadside Assistance is not part of or included in the coverage provided by the New Vehicle Limited Warranty. Saturn reserves the right to make any changes or discontinue the Roadside Assistance program at any time without notification.

## Canadian Roadside Assistance

Vehicles purchased in Canada have an extensive Saturn Roadside Assistance program accessible from anywhere in Canada or the United States. Please refer to the Warranty and Owner Assistance Information book.

## Vehicle Data Collection and Event Data Recorders

Your vehicle, like other modern motor vehicles, has a number of sophisticated computer systems that monitor and control several aspects of the vehicle's performance. Your vehicle uses on-board vehicle computers to monitor emission control components to optimize fuel economy, to monitor conditions for air bag deployment and, if so equipped, to provide anti-lock braking and to help the driver control the vehicle in difficult driving situations. Some information may be stored during regular operations to facilitate repair of detected malfunctions; other information is stored only in a crash or near crash event by computer systems commonly called event data recorders (EDR).

In a crash or near crash event, computer systems, such as the Air Bag Sensing and Diagnostic Module (SDM) in your vehicle may record information about the condition of the vehicle and how it was operated, such as engine speed, brake applications, throttle position, vehicle speed, safety belt usage, air bag readiness, air bag performance data, and the severity of a collision.

This information has been used to improve vehicle crash performance and may be used to improve crash performance of future vehicles and driving safety. Unlike the data recorders on many airplanes, these on-board systems do not record sounds, such as conversation of vehicle occupants.

To read this information, special equipment is needed and access to the vehicle or the SDM is required. GM will not access information about a crash event or share it with others other than

- with the consent of the vehicle owner or, if the vehicle is leased, with the consent of the lessee,
- in response to an official request of police or similar government office,
- as part of GM's defense of litigation through the discovery process, or
- as required by law.

In addition, once GM collects or receives data, GM may

- use the data for GM research needs,
- make it available for research where appropriate confidentiality is to be maintained and need is shown, or
- share summary data which is not tied to a specific vehicle with non-GM organizations for research purposes.

Others, such as law enforcement, may have access to the special equipment that can read the information if they have access to the vehicle or SDM.

If your vehicle is equipped with OnStar®, please check the OnStar® subscription service agreement or manual for information on its operations and data collection.

# Reporting Safety Defects

## Reporting Safety Defects to the United States Government

If you believe that your vehicle has a defect which could cause a crash or could cause injury or death, you should immediately inform the National Highway Traffic Safety Administration (NHTSA), in addition to notifying Saturn Corporation.

If NHTSA receives similar complaints, it may open an investigation, and if it finds that a safety defect exists in a group of vehicles, it may order a recall and remedy campaign. However, NHTSA cannot become involved in individual problems between you, your retailer or Saturn Corporation.

To contact NHTSA, you may either call the Auto Safety Hotline toll-free at 1-800-424-9393 (or 366-0123 in the Washington, D.C. area) or write to:

NHTSA, U.S. Department of Transportation
Washington, D.C. 20590

You can also obtain other information about motor vehicle safety from the hotline.

## Reporting Safety Defects to the Canadian Government

If you live in Canada, and you believe that your vehicle has a safety defect, you should immediately notify Transport Canada, in addition to notifying General Motors of Canada Limited. You may write to:

Transport Canada
330 Sparks Street
Tower C
Ottawa, Ontario K1A 0N5

## Reporting Safety Defects to Saturn

In addition to notifying NHTSA (or Transport Canada) in a situation like this, we certainly hope you'll notify us.

U.S. customers can call the Saturn Customer Assistance Center at 1-800-553-6000, or write:

Saturn Corporation
100 Saturn Parkway
Mail Drop 371-999-S24
Spring Hill, TN 37174-1500

In Canada, please call us at 1-800-263–1999.
Or, write to:

Saturn Customer Communication Centre
General Motors of Canada Limited
1908 Colonel Sam Drive
Oshawa, Ontario L1H 8P7

# Service Publications Ordering Information

## Service Manuals

A variety of publications are available to you. Saturn service manuals are written for trained technicians, and in some cases, specialized tools and equipment are necessary to complete certain repairs. However, the manuals are available to owners who either have the training, or wish to gain a greater understanding of the technical aspect of their Saturn.

For additional publications information or to order publications, call toll free 1-800-2-SATURN or visit win.wallace.com/saturn to order on-line.

In Canada, Saturn service manuals are available by calling toll free 1-800-551-4123.

## Owner Publications

Information on how to obtain product bulletins and as described below is applicable only in the fifty U.S. states and the District of Columbia, and only for cars and light trucks with a GVWR less than 10,000 pounds (4 536 kg). Copies of individual bulletins are also at your participating Saturn retailer. You can ask to see them.

In Canada, information relating to product service bulletins can be obtained by contacting your Saturn retailer.

## Service Bulletins

Saturn regularly sends its retailers useful service bulletins about Saturn products. Saturn monitors product performance in the field. We then prepare bulletins for servicing our products better. You can get these bulletins, too.

Bulletins cover various subjects. Some pertain to the proper use and care of your vehicle. Some describe costly repairs. Others describe inexpensive repairs which, if done on time with the latest parts, may avoid future costly repairs.

Some bulletins tell a technician how to repair a new or unexpected condition. Others describe a quicker way to fix your vehicle. They can help a technician service your vehicle better.

Most bulletins apply to conditions affecting a small number of vehicles. Your Saturn retailer or a qualified technician may have to determine if a specific bulletin applies to your vehicle. To order Saturn bulletins, call Saturn Publications at 1-800-2-SATURN or visit win.wallace.com/saturn to order on-line.

# A


Accessory Power Outlets ..... 3-18
Activating the Theft-Deterrent Feature ..... 3-68
Adding Windshield Washer Fluid ..... 5-37
Additives, Fuel ..... 5-6
Add-On Electrical Equipment ..... 5-95
Adjusting the Speakers
(Balance/Fade) ..... 3-49, 3-52, 3-58
Air Bag
Readiness Light ..... 3-30
Air Bag Systems ..... 1-50
Adding Equipment to Your
Air Bag-Equipped Vehicle ..... 1-58
How Does an Air Bag Restrain? ..... 1-56
Servicing Your Air Bag-Equipped Vehicle ..... 1-58
What Makes an Air Bag Inflate? ..... 1-56
What Will You See After an
Air Bag Inflates? ..... 1-56
When Should an Air Bag Inflate? ..... 1-55
Where Are the Air Bags? ..... 1-52
Air Cleaner/Filter, Engine ..... 5-22
Airbag Sensing and Diagnostic Module (SDM) ..... 7-7
AM ..... 3-70
AM-FM Radio ..... 3-47
Antenna, Fixed Mast ..... 3-71
Antenna, XM™ Satellite Radio
Antenna System ..... 3-71
Anti-lock Brake System (ABS) ..... 4-6
Anti-Lock Brake, System Warning Light ..... 3-34
Appearance Care ..... 5-87
Care of Safety Belts ..... 5-89
Chemical Paint Spotting ..... 5-92
Cleaning the Inside of Your Vehicle ..... 5-87
Cleaning the Outside of Your Vehicle ..... 5-90
Finish Damage ..... 5-92
Sheet Metal Damage ..... 5-92
Underbody Maintenance ..... 5-92
Vehicle Care/Appearance Materials ..... 5-93
Weatherstrips ..... 5-90
Ashtrays ..... 3-19
Audio System(s) ..... 3-46
AM-FM Radio ..... 3-47
Care of Your CD Player ..... 3-71
Care of Your CDs ..... 3-71
Fixed Mast Antenna ..... 3-71
Radio with CD ..... 3-50, 3-54
Setting the Time for Radios with
Radio Data Systems (RDS) ..... 3-47
Setting the Time for Radios without
Radio Data Systems (RDS) ..... 3-46
Theft-Deterrent Feature ..... 3-68
Understanding Radio Reception ..... 3-70
XM™ Satellite Radio Antenna System ..... 3-71
Automatic Dimming Mirror Operation ..... 2-38, 2-40

Automatic Headlamp System ..... 3-16
Automatic Transaxle ..... 2-20
  Fluid ..... 5-24
  Operation ..... 2-23

# B

Backing Up ..... 4-43
Battery ..... 5-41
Battery Replacement ..... 2-8
Battery Run-Down Protection ..... 3-18
Battery Warning Light ..... 3-31
Before Leaving on a Long Trip ..... 4-22
Brake
  Parking ..... 2-30
  System Warning Light ..... 3-32
Brake Adjustment ..... 5-40
Brake Fluid ..... 5-38
Brake Pedal Travel ..... 5-40
Brake Wear ..... 5-40
Brakes ..... 5-38
Braking ..... 4-6
Braking in Emergencies ..... 4-8
Break-In, New Vehicle ..... 2-18
Bulb Replacement ..... 5-48
  Center High-Mounted Stoplamp (CHMSL) ..... 5-55
  Fog Lamps ..... 5-53
Bulb Replacement (cont.)
  Front Turn Signal and Parking Lamps ..... 5-53
  Front Turn Signal Lamps ..... 5-51
  Halogen Bulbs ..... 5-48
  Headlamp Aiming ..... 5-47
  Headlamps ..... 5-48, 5-50
  Replacement Bulbs ..... 5-56
  Sidemarker Lamps ..... 5-54
  Taillamps, Stoplamps and Back-Up Lamps ..... 5-55
Buying New Tires ..... 5-70

# C

California Fuel ..... 5-6
Canadian Owners ..... ii
Canadian Roadside Assistance ..... 7-7
Capacities and Specifications ..... 5-102
Carbon Monoxide ..... 4-26, 4-39, 2-12, 2-34
Care of
  Safety Belts ..... 5-89
  Your CD Player ..... 3-71
  Your CDs ..... 3-71
Cassette Tape Player Service ..... 6-10
CD Messages ..... 3-54, 3-67
Center Console Storage Area ..... 2-44
Center High-Mounted Stoplamp (CHMSL) ..... 5-55
Chains, Tires ..... 5-74

Change Engine Oil Message ..... 3-43
Changing a Tire When Trailer Towing ..... 4-46
Changing the Language (Canada Only) ..... 3-41
Check
  Engine Light ..... 3-36
Check Gage Message ..... 3-44
Checking Brake Fluid ..... 5-39
Checking Coolant ..... 5-28
Checking Engine Oil ..... 5-15
Checking Things Under the Hood ..... 5-10
Chemical Paint Spotting ..... 5-92
Child Restraints
  Child Restraint Systems ..... 1-35
  Infants and Young Children ..... 1-32
  Lower Anchorages and Top Tethers for Children (LATCH System) ..... 1-42
  Older Children ..... 1-29
  Securing a Child Restraint Designed for the LATCH System ..... 1-44
  Securing a Child Restraint in a Rear Seat Position ..... 1-44
  Securing a Child Restraint in the Right Front Seat Position ..... 1-47
  Top Strap ..... 1-39
  Top Strap Anchor Location ..... 1-41
  Where to Put the Restraint ..... 1-38
Cigarette Lighter ..... 3-19
Cleaning
  Inside of Your Vehicle ..... 5-87
  Outside of Your Vehicle ..... 5-90
  Underbody Maintenance ..... 5-92
  Weatherstrips ..... 5-90
Cleaning Aluminum Wheels ..... 5-91
Cleaning Exterior Lamps/Lenses ..... 5-90
Cleaning Fabric/Carpet ..... 5-90
Cleaning Glass Surfaces ..... 5-89
Cleaning Interior Plastic Components ..... 5-89
Cleaning the Mirror ..... 2-39, 2-41
Cleaning the Top of the Instrument Panel ..... 5-89
Cleaning Tires ..... 5-92
Cleaning Vinyl ..... 5-89
Cleaning Windshield and Wiper Blades ..... 5-91
Climate Control System ..... 3-20, 3-22
  Air Filter, Passenger Compartment ..... 3-25
  Outlet Adjustment ..... 3-24
Clutch, Hydraulic ..... 5-25
Compact Spare Tire ..... 5-86
Compass Calibration ..... 2-38, 2-40
Compass Operation ..... 2-40
Compass Variance ..... 2-38, 2-40
Control of a Vehicle ..... 4-5

Convenience Net ..... 2-45
Coolant
Engine Temperature Gage ..... 3-35
Heater, Engine ..... 2-22
Low Level Warning Message ..... 3-43
Surge Tank Pressure Cap ..... 5-29
Cooling System ..... 5-32
Cruise Control ..... 3-12
Cruise Control Message ..... 3-42
Cupholder(s) ..... 2-44
Customer Assistance Information
Customer Assistance for Text Telephone (TTY) Users ..... 7-4
Customer Satisfaction Procedure ..... 7-2
GM Mobility Program for Persons with Disabilities ..... 7-5
Reporting Safety Defects to Saturn ..... 7-9
Reporting Safety Defects to the Canadian Government ..... 7-9
Reporting Safety Defects to the United States Government ..... 7-9
Roadside Assistance Program ..... 7-5
Service Publications Ordering Information ..... 7-10

# D

Daytime Running Lamps ..... 3-15
Defensive Driving ..... 4-2
Defogging and Defrosting ..... 3-21, 3-23
Delayed Locking ..... 2-10
Dinghy Towing (Five-Speed Automatic Transaxle and VTi Variable Transaxle) ..... 4-31
Dinghy Towing (Manual Transaxle) ..... 4-32
Disabling the Theft-Deterrent Feature ..... 3-70
Doing Your Own Service Work ..... 5-4
Dolly Towing (All Transaxles) ..... 4-33
Dome Lamp ..... 3-18
Door
Delayed Locking ..... 2-10
Locks ..... 2-9
Power Door Locks ..... 2-10
Programmable Automatic Door Locks ..... 2-10
Rear Door Security Locks ..... 2-11
Rear Doors ..... 2-12
Driver
Position, Safety Belt ..... 1-14
Seat Height Adjuster ..... 1-3
Driving
At Night ..... 4-15
City ..... 4-20
Defensive ..... 4-2

Driving (cont.)
Drunken ..... 4-2
Freeway ..... 4-21
Hill and Mountain Roads ..... 4-24
In Rain and on Wet Roads ..... 4-17
Winter ..... 4-26
Driving on Grades ..... 4-44
Driving on Snow or Ice ..... 4-27
Driving Through Deep Standing Water ..... 4-19
Driving Through Flowing Water ..... 4-19
Driving with a Trailer ..... 4-43

# E

Electric Power Steering ..... 4-9
Electrical System
Add-On Equipment ..... 5-95
Fuses and Circuit Breakers ..... 5-95
Power Windows and Other Power Options ..... 5-95
Windshield Wiper Fuses ..... 5-95
Emergency Trunk Release Handle ..... 2-14
Emissions Inspection and Maintenance Programs ..... 3-38
Engine
Air Cleaner/Filter ..... 5-22
Battery ..... 5-41
Change Oil Message ..... 3-43
Engine (cont.)
Check and Service Engine Soon Light ..... 3-36
Coolant ..... 5-26
Coolant Heater ..... 2-22
Coolant Temperature Gage ..... 3-35
Drive Belt Routing ..... 6-17
Engine Compartment Overview ..... 5-12
Exhaust ..... 2-34
Oil ..... 5-15
Overheating ..... 5-29
Starting ..... 2-20
Engine Air Cleaner/Filter Replacement ..... 5-22
Engine Compartment Fuse Block (2.0L Supercharged Engine) ..... 5-100
Engine Compartment Fuse Block (2.2L L4 Engine) ..... 5-98
Engine Cooling When Trailer Towing ..... 4-46
Engine Oil Additives ..... 5-19
Engine Specifications ..... 5-103
Entry Lighting ..... 3-18
Error Message ..... 3-45
Event Data Recorders (EDR) ..... 7-7
Express-Down Window ..... 2-16
Extender, Safety Belt ..... 1-28
Exterior Lamps ..... 3-15

# F


Filter
Engine Air Cleaner ..... 5-22
Finding a Category (CAT) Station ..... 3-58
Finding a Station ..... 3-48, 3-50, 3-56
Finish Care ..... 5-90
Finish Damage ..... 5-92
Five-Speed ..... 2-28
Five-Speed Automatic and VTi Variable ..... 2-23
Fixed Mast Antenna ..... 3-71
Flash-to-Pass ..... 3-9
Flat Tire ..... 5-75
Flat Tire, Changing ..... 5-76
Fluid
Automatic Transaxle ..... 5-24
Manual Transaxle ..... 5-25
Windshield Washer ..... 5-37
FM Stereo ..... 3-70
Fog Lamps ..... 3-17
Folding Rear Seat ..... 1-7
Folding Seatback, Passenger ..... 1-6
Following Distance ..... 4-43
Fuel ..... 5-5
Additives ..... 5-6
California Fuel ..... 5-6
Fuel (cont.)
Filling a Portable Fuel Container ..... 5-9
Filling Your Tank ..... 5-8
Fuels in Foreign Countries ..... 5-7
Gage ..... 3-40
Gasoline Octane ..... 5-5
Gasoline Specifications ..... 5-5
Low Warning Message ..... 3-45
Fuses
Fuses and Circuit Breakers ..... 5-95
Windshield Wiper ..... 5-95


# G


Gage
Engine Coolant Temperature ..... 3-35
Fuel ..... 3-40
Speedometer ..... 3-29
Tachometer ..... 3-29
Gasoline
Octane ..... 5-5
Specifications ..... 5-5
Glove Box ..... 2-44
GM Mobility Program for Persons with
Disabilities ..... 7-5

# H


Hazard Warning Flashers ..... 3-6
Head Restraints ..... 1-5
Headlamp
  Aiming ..... 5-47
Headlamp High/Low-Beam Changer ..... 3-9
Headlamps ..... 3-10, 3-15, 5-48, 5-50
  Bulb Replacement ..... 5-48
  Front Turn Signal and Parking Lamps ..... 5-53
  Front Turn Signal Lamps ..... 5-51
  Halogen Bulbs ..... 5-48
  Sidemarker Lamps ..... 5-54
Height Adjuster, Driver Seat ..... 1-3
High Speed Operation (Redline) ..... 5-67
Highway Hypnosis ..... 4-23
Hill and Mountain Roads ..... 4-24
Hitches ..... 4-42
Hood
  Checking Things Under ..... 5-10
  Release ..... 5-10
Horn ..... 3-7
How to Add Coolant to the Coolant
  Surge Tank ..... 5-34
How to Inspect the Engine Air Cleaner/Filter ..... 5-23
How to Use This Manual ..... ii
How to Wear Safety Belts Properly ..... 1-14
Hydraulic Clutch ..... 5-25
Hydroplaning ..... 4-19


# I


If No Steam Is Coming From Your Engine ..... 5-31
If Steam Is Coming From Your Engine ..... 5-30
If the Light Is Flashing ..... 3-37
If the Light Is On Steady ..... 3-37
If You Are Caught in a Blizzard ..... 4-28
If You Are Stuck in Sand, Mud, Ice or Snow ..... 4-30
If You Do Decide to Pull a Trailer ..... 4-40
Ignition Positions ..... 2-18
Infants and Young Children, Restraints ..... 1-32
Inflation - Tire Pressure ..... 5-66
Instrument Panel
  Cluster ..... 3-28
  Overview ..... 3-4
Instrument Panel Brightness ..... 3-17
Instrument Panel Fuse Block ..... 5-96
Interior Lamps ..... 3-17

# J

Jump Starting ..... 5-42

# K

Keyless Entry System ..... 2-4
Keys ..... 2-3

# L

Lamps
Exterior ..... 3-15
Fog Lamps ..... 5-53
Interior ..... 3-17
Lap-Shoulder Belt ..... 1-14, 1-23
LATCH System
Child Restraints ..... 1-42
Securing a Child Restraint Designed for the LATCH System ..... 1-44
Leaving Your Vehicle ..... 2-11
Leaving Your Vehicle With the Engine Running ..... 2-32
Light
Air Bag Readiness ..... 3-30
Anti-Lock Brake System Warning ..... 3-34
Battery Warning ..... 3-31
Brake System Warning ..... 3-32
Malfunction Indicator ..... 3-36
Oil Pressure ..... 3-39
Passlock® Warning ..... 3-40
Safety Belt Reminder ..... 3-30
Up-Shift ..... 3-32
Loading Your Vehicle ..... 4-33
Lockout Protection ..... 2-11
Locks
Delayed Locking ..... 2-10
Door ..... 2-9
Leaving Your Vehicle ..... 2-11
Lockout Protection ..... 2-11
Power Door ..... 2-10
Programmable Automatic Door Locks ..... 2-10
Rear Door Security Locks ..... 2-11
Loss of Control ..... 4-14
Low Coolant Level Warning Message ..... 3-43
Low Fuel Warning Message ..... 3-45
Low-Profile Performance Tire (Redline) ..... 5-59

# M


Maintenance Schedule
- Additional Required Services ..... 6-6
- At Each Fuel Fill ..... 6-10
- At Least Once a Month ..... 6-10
- At Least Once a Year ..... 6-11
- Introduction ..... 6-2
- Maintenance Footnotes ..... 6-8
- Maintenance Record ..... 6-18
- Maintenance Requirements ..... 6-2
- Normal Maintenance Replacement Parts ..... 6-16
- Owner Checks and Services ..... 6-9
- Recommended Fluids and Lubricants ..... 6-14
- Scheduled Maintenance ..... 6-4
- Using Your ..... 6-2
- Your Vehicle and the Environment ..... 6-2

Maintenance When Trailer Towing ..... 4-46
Making Turns ..... 4-43
Malfunction Indicator Light ..... 3-36
Manual Seats ..... 1-2
Manual Transaxle ..... 2-20
- Fluid ..... 5-25
- Operation ..... 2-28

Manual Windows ..... 2-15
Map Lamps ..... 3-18
Matching Transmitter(s) to Your Vehicle ..... 2-7
Message
- Center ..... 3-41
- Change Engine Oil ..... 3-43
- Check Gage ..... 3-44
- Cruise Control ..... 3-42
- Error ..... 3-45
- Low Coolant Level Warning ..... 3-43
- Low Fuel Warning ..... 3-45
- Low Traction ..... 3-42
- Power Steering ..... 3-44
- Service Vehicle ..... 3-45
- Traction Off ..... 3-42
- Transaxle Fluid Cold ..... 3-43
- Transaxle Fluid Hot ..... 3-42
- Trunk Ajar Warning ..... 3-44

Mirrors
- Automatic Dimming Rearview with Compass and Temperature Display ..... 2-40
- Automatic Dimming Rearview with OnStar®, Compass and Temperature Display ..... 2-37
- Manual Rearview Mirror ..... 2-36
- Manual Rearview Mirror with OnStar® ..... 2-36
- Outside Convex Mirror ..... 2-42
- Outside Power Mirrors ..... 2-42
- Outside Remote Control Mirror ..... 2-42

MyGMLink.com ..... 7-4

# N

New Vehicle Break-In ..... 2-18
Normal Maintenance Replacement Parts ..... 6-16

# O

Odometer ..... 3-29
Off-Road Recovery ..... 4-12
Oil
  Engine ..... 5-15
  Pressure Light ..... 3-39
Older Children, Restraints ..... 1-29
Online Owner Center ..... 7-4
OnStar® Personal Calling ..... 2-44
OnStar® Services ..... 2-43
OnStar® System ..... 2-43
OnStar® Virtual Advisor ..... 2-44
Operation ..... 3-20, 3-22
Other Warning Devices ..... 3-7
Outlet Adjustment ..... 3-24
Outside
  Convex Mirror ..... 2-42
  Power Mirrors ..... 2-42
  Remote Control Mirror ..... 2-42
Owner Checks and Services ..... 6-9
Owner Publications ..... 7-10
Owners, Canadian ..... ii

# P

Park (P)
  Shifting Into ..... 2-31
  Shifting Out of ..... 2-33
Parking
  Brake ..... 2-30
  Over Things That Burn ..... 2-34
Parking on Hills ..... 4-45
Parking Your Vehicle ..... 2-33
Passenger Compartment Air Filter ..... 3-25
Passenger Visor Webbing Clip (Coupe) ..... 2-16
Passing ..... 4-12, 4-43
Passlock® ..... 2-17
Playing a CD ..... 3-52
Playing the Radio ..... 3-47, 3-50, 3-55
Playing the Single CD Player ..... 3-60
Playing the Six-Disc CD Player ..... 3-62
Power
  Accessory Outlets ..... 3-18
  Door Locks ..... 2-10
  Electrical System ..... 5-95

Power (cont.)
Steering Message ..... 3-44
Windows ..... 2-15
Pretensioners, Safety Belt ..... 1-28
Programmable Automatic Door Locks ..... 2-10

# Q

Questions and Answers About Safety Belts ..... 1-13

# R

Racing or Other Competitive Driving ..... 2-21
Radio Data System (RDS) ..... 3-54
Radio Personalization ..... 3-67
Radios ..... 3-46
AM-FM Radio ..... 3-47
Care of Your CD Player ..... 3-71
Care of Your CDs ..... 3-71
Radio with CD ..... 3-50, 3-54
Setting the Time for Radios with Radio Data Systems (RDS) ..... 3-47
Setting the Time for Radios without Radio Data Systems (RDS) ..... 3-46
Theft-Deterrent ..... 3-68
Understanding Reception ..... 3-70
RDS Messages ..... 3-59
Rear Door Security Locks ..... 2-11
Rear Doors ..... 2-12
Rear Safety Belt Comfort Guides ..... 1-26
Rear Seat Passenger Positions ..... 1-22
Rear Seat Passengers, Safety Belts ..... 1-22
Rear Window Defogger ..... 3-21, 3-24
Rearview Mirror, Automatic Dimming with Compass and Temperature Display ..... 2-40
Rearview Mirror, Automatic Dimming with OnStar®, Compass and Temperature Display ..... 2-37
Rearview Mirror with OnStar® ..... 2-36
Rearview Mirrors ..... 2-36
Reclining Seatbacks ..... 1-3
Recommended Fluids and Lubricants ..... 6-14
Recreational Vehicle Towing ..... 4-31
Remote Keyless Entry System ..... 2-4
Remote Keyless Entry System, Operation ..... 2-5
Remote Trunk Release ..... 2-13
Remote Trunk Release Lockout ..... 2-13
Removing the Flat Tire and Installing the Spare Tire ..... 5-80
Removing the Spare Tire and Tools ..... 5-77
Replacement Bulbs ..... 5-56
Replacing Brake System Parts ..... 5-41

Reporting Safety Defects
Canadian Government ..... 7-9
Saturn ..... 7-9
United States Government ..... 7-9
Restraint System Check
Checking Your Restraint Systems ..... 1-59
Replacing Restraint System Parts
After a Crash ..... 1-59
Restraint Systems
Checking ..... 1-59
Replacing Parts ..... 1-59
Retained Accessory Power (RAP) ..... 2-19
Right Front Passenger Position, Safety Belts ..... 1-22
Roadside
Assistance Program ..... 7-5
Roof Rack System ..... 2-45
Routing, Engine Drive Belt ..... 6-17
Running Your Engine While You Are Parked ..... 2-35

# S

Safety Belt
Pretensioners ..... 1-28
Reminder Light ..... 3-30
Safety Belts
Care of ..... 5-89
Driver Position ..... 1-14
Safety Belts (cont.)
How to Wear Safety Belts Properly ..... 1-14
Questions and Answers About Safety Belts ..... 1-13
Rear Safety Belt Comfort Guides for
Children and Small Adults ..... 1-26
Rear Seat Passengers ..... 1-22
Right Front Passenger Position ..... 1-22
Safety Belt Extender ..... 1-28
Safety Belt Use During Pregnancy ..... 1-21
Safety Belts Are for Everyone ..... 1-8
Safety Chains ..... 4-42
Safety Warnings and Symbols ..... iii
Scheduled Maintenance ..... 6-4
Seatback, Folding Passenger ..... 1-6
Seats
Driver Seat Height Adjuster ..... 1-3
Head Restraints ..... 1-5
Manual ..... 1-2
Passenger Folding Seatback ..... 1-6
Reclining Seatbacks ..... 1-3
Split Folding Rear Seat ..... 1-7
Securing a Child Restraint
Designed for the LATCH System ..... 1-44
Rear Seat Position ..... 1-44
Right Front Seat Position ..... 1-47
Security While You Travel ..... 7-5

Service ..... 5-3
Adding Equipment to the Outside of Your Vehicle ..... 5-4
Doing Your Own Work ..... 5-4
Engine Soon Light ..... 3-36
Publications Ordering Information ..... 7-10
Vehicle Message ..... 3-45
Service Bulletins ..... 7-10
Service Engine Soon Light ..... 3-36
Service Manuals ..... 7-10
Setting Preset Stations ..... 3-48, 3-51, 3-57
Setting the Time
Radios with Radio Data Systems (RDS) ..... 3-47
Radios without Radio Data Systems (RDS) ..... 3-46
Setting the Tone (Bass/Treble) ..... 3-49, 3-52, 3-58
Sheet Metal Damage ..... 5-92
Shift Lock Release ..... 2-26
Shift Speeds ..... 2-29
Shifting Into Park (P) ..... 2-31
Shifting Out of Park (P) ..... 2-33
Shoulder Belt Height Adjuster (Sedan) ..... 1-16
Skidding ..... 4-14
Some Other Rainy Weather Tips ..... 4-19
Special Fabric Cleaning Problems ..... 5-88
Specifications, Capacities ..... 5-102
Speedometer ..... 3-29
Split Folding Rear Seat ..... 1-7
Starting Your Engine ..... 2-20
Steering ..... 4-9
Steering in Emergencies ..... 4-11
Steering Tips ..... 4-10
Steering Wheel, Tilt Wheel ..... 3-7
Storage Areas
Center Console Storage Area ..... 2-44
Convenience Net ..... 2-45
Cupholder(s) ..... 2-44
Glove Box ..... 2-44
Roof Rack System ..... 2-45
Storing the Flat or Spare Tire and Tools ..... 5-84
Stuck in Sand, Mud, Ice or Snow ..... 4-30
Sun Visors ..... 2-16
Sunroof ..... 2-45

# T

Tachometer ..... 3-29
Taillamps
Stoplamps, and Back-Up Lamps ..... 5-55
Temperature and Compass Display ..... 2-37
Temperature Display ..... 2-40
Theft-Deterrent, Radio ..... 3-68

Theft-Deterrent System ..... 2-6
Theft-Deterrent Systems ..... 2-17
Passlock® ..... 2-17
Tilt Wheel ..... 3-7
Tire Inflation Check ..... 6-10
Tire Sidewall Labeling ..... 5-60
Tire Size ..... 5-62
Tire Terminology and Definitions ..... 5-63
Tires ..... 5-58
Buying New Tires ..... 5-70
Chains ..... 5-74
Changing a Flat Tire ..... 5-76
Compact Spare Tire ..... 5-86
If a Tire Goes Flat ..... 5-75
Inflation - Tire Pressure ..... 5-66
Inspection and Rotation ..... 5-68
Uniform Tire Quality Grading ..... 5-71
Wheel Alignment and Tire Balance ..... 5-72
Wheel Replacement ..... 5-72
When It Is Time for New Tires ..... 5-69
To Use the Engine Coolant Heater ..... 2-22
Top Strap ..... 1-39
Top Strap Anchor Location ..... 1-41
Torque Lock ..... 2-32
Total Weight on Your Vehicle's Tires ..... 4-42
Towing
Recreational Vehicle ..... 4-31
Towing a Trailer ..... 4-39
Your Vehicle ..... 4-31
Traction
Control System (TCS) ..... 4-8
Low Message ..... 3-42
Traction Off Message ..... 3-42
Trailer Brakes ..... 4-42
Transaxle
Fluid, Automatic ..... 5-24
Fluid Cold Message ..... 3-43
Fluid Hot Message ..... 3-42
Fluid, Manual ..... 5-25
Transaxle Operation, Automatic ..... 2-23
Transaxle Operation, Manual ..... 2-28
Transmission
Up-Shift Light ..... 3-32
Trunk ..... 2-12
Trunk Ajar Warning Message ..... 3-44
Turn and Lane-Change Signals ..... 3-8
Turn Signal/Multifunction Lever ..... 3-8
Turn Signals When Towing a Trailer ..... 4-44

# U


Understanding Radio Reception ..... 3-70
Uniform Tire Quality Grading ..... 5-71
Unlocking the Theft-Deterrent Feature
  After a Power Loss ..... 3-69
Up-Shift Light ..... 3-32
Used Replacement Wheels ..... 5-73
Using an MP3 CD ..... 3-65
Using Cleaner on Fabric ..... 5-88


# V


Vehicle
  Control ..... 4-5
  Damage Warnings ..... iv
  Loading ..... 4-33
  Parking Your ..... 2-33
  Symbols ..... iv
Vehicle Data Collection and Event Data
  Recorders ..... 7-7
Vehicle Identification
  Number (VIN) ..... 5-94
  Service Parts Identification Label ..... 5-94
Vehicle Storage ..... 5-41
Ventilation Adjustment ..... 3-24
Visors ..... 2-16


# W


Warning Lights, Gages and Indicators ..... 3-27
Warnings
  Hazard Warning Flashers ..... 3-6
  Other Warning Devices ..... 3-7
  Safety and Symbols ..... iii
  Vehicle Damage ..... iv
Washing Your Vehicle ..... 5-90
Weight of the Trailer ..... 4-41
Weight of the Trailer Tongue ..... 4-41
What Kind of Engine Oil to Use ..... 5-16
What to Do with Used Oil ..... 5-21
Wheels
  Alignment and Tire Balance ..... 5-72
  Replacement ..... 5-72
When to Add Engine Oil ..... 5-16
When to Change Engine Oil
  (GM Oil Life System) ..... 5-20
When to Inspect the Engine Air Cleaner/Filter ..... 5-22
When You Are Ready to Leave After Parking
  on a Hill ..... 4-45
Where to Put the Restraint ..... 1-38
Why Safety Belts Work ..... 1-10
Window Lock Out ..... 2-16

Windows ..... 2-14
Manual ..... 2-15
Power ..... 2-15
Windshield Washer ..... 3-12
Fluid ..... 5-37
Windshield Wiper
Blade Replacement ..... 5-57
Fuses ..... 5-95
Windshield Wiper Lever ..... 3-11
Winter Driving ..... 4-26

# X

XM™ Satellite Radio Antenna System ..... 3-71
XM™ Satellite Radio Service ..... 3-70
XM™ Satellite Radio Service
(48 Contiguous US States) ..... 3-55

# Y

Your Vehicle and the Environment ..... 6-2